IEEE Std C37.20.2™-1999 (R2005)
(Revision of
IEEE Std C37.20.2-1993)

IEEE Standard for Metal-Clad Switchgear

Sponsor

Switchgear Committee
of the
IEEE Power Engineering Society

Reaffirmed 20 March 2005
Approved 1 October 1999

IEEE-SA Standards Board

Abstract: Metal-clad (MC) medium-voltage switchgear that contains drawout electrically operated circuit breakers is covered. MC switchgear is compartmentalized to isolate all components such as instrumentation, main bus, and both incoming and outgoing connections with grounded metal barriers. Rated maximum voltage levels for metal-clad switchgear range from 4.76 kV to 38 kV with main bus continuous current ratings of 1200 A, 2000 A, and 3000 A. MC switchgear also contains associated control, instruments, metering, relaying, protective, and regulating devices, as necessary. Service conditions, ratings, temperature limitations and classification of insulating materials, insulation (dielectric) withstand voltage requirements, test procedures, and applications are discussed.
Keywords: control, cumulative loading, current transformers, drawout, indoor, instrumentation, load current-carrying, metal-clad (MC) switchgear, metal-enclosed (ME) power switchgear, outdoor, protection, qualifying terms, switchgear assemblies, transformer accuracy, voltage transformers

---

The Institute of Electrical and Electronics Engineers, Inc.
3 Park Avenue, New York, NY 10016-5997, USA

Copyright © 2000 by the Institute of Electrical and Electronics Engineers, Inc.
All rights reserved. Published 7 July 2000. Printed in the United States of America.

Print: ISBN 0-7381-1829-X SH94797
PDF: ISBN 0-7381-1830-3 SS94797

No part of this publication may be reproduced in any form, in an electronic retrieval system or otherwise, without the prior written permission of the publisher.

Copyright The Institute of Electrical and Electronics Engineers, Inc.
Provided by IHS under license with IEEE
No reproduction or networking permitted without license from IHS
Not for Resale

IEEE Standards documents are developed within the IEEE Societies and the Standards Coordinating Committees of the IEEE Standards Association (IEEE-SA) Standards Board. Members of the committees serve voluntarily and without compensation. They are not necessarily members of the Institute. The standards developed within IEEE represent a consensus of the broad expertise on the subject within the Institute as well as those activities outside of IEEE that have expressed an interest in participating in the development of the standard.

Use of an IEEE Standard is wholly voluntary. The existence of an IEEE Standard does not imply that there are no other ways to produce, test, measure, purchase, market, or provide other goods and services related to the scope of the IEEE Standard. Furthermore, the viewpoint expressed at the time a standard is approved and issued is subject to change brought about through developments in the state of the art and comments received from users of the standard. Every IEEE Standard is subjected to review at least every five years for revision or reaffirmation. When a document is more than five years old and has not been reaffirmed, it is reasonable to conclude that its contents, although still of some value, do not wholly reflect the present state of the art. Users are cautioned to check to determine that they have the latest edition of any IEEE Standard.

Comments for revision of IEEE Standards are welcome from any interested party, regardless of membership affiliation with IEEE. Suggestions for changes in documents should be in the form of a proposed change of text, together with appropriate supporting comments.

Interpretations: Occasionally questions may arise regarding the meaning of portions of standards as they relate to specific applications. When the need for interpretations is brought to the attention of IEEE, the Institute will initiate action to prepare appropriate responses. Since IEEE Standards represent a consensus of all concerned interests, it is important to ensure that any interpretation has also received the concurrence of a balance of interests. For this reason, IEEE and the members of its societies and Standards Coordinating Committees are not able to provide an instant response to interpretation requests except in those cases where the matter has previously received formal consideration.

Comments on standards and requests for interpretations should be addressed to:

Secretary, IEEE-SA Standards Board
445 Hoes Lane
P.O. Box 1331
Piscataway, NJ 08855-1331
USA

Note: Attention is called to the possibility that implementation of this standard may require use of subject matter covered by patent rights. By publication of this standard, no position is taken with respect to the existence or validity of any patent rights in connection therewith. The IEEE shall not be responsible for identifying patents for which a license may be required by an IEEE standard or for conducting inquiries into the legal validity or scope of those patents that are brought to its attention.

IEEE is the sole entity that may authorize the use of certification marks, trademarks, or other designations to indicate compliance with the materials set forth herein.

Authorization to photocopy portions of any individual standard for internal or personal use is granted by the Institute of Electrical and Electronics Engineers, Inc., provided that the appropriate fee is paid to Copyright Clearance Center. To arrange for payment of licensing fee, please contact Copyright Clearance Center, Customer Service, 222 Rosewood Drive, Danvers, MA 01923 USA; (978) 750-8400. Permission to photocopy portions of any individual standard for educational classroom use can also be obtained through the Copyright Clearance Center.

--`,,```,,,,````-`-`,,`,,`,`,,`---

Copyright The Institute of Electrical and Electronics Engineers, Inc.
Provided by IHS under license with IEEE
No reproduction or networking permitted without license from IHS

Not for Resale

Introduction

(This introduction is not part of IEEE Std C37.20.2-1999, IEEE Standard for Metal-Clad Switchgear.)

This standard has been revised to reflect needed technical changes that have been suggested since the last revision to C37.20.2 was published in 1993. The major revision in this edition is the removal of station-type cubicle switchgear. Other significant changes are as follows:

— Inclusion of IEEE Std C37.20.2b-1994, Supplement to IEEE Standard for Metal-Clad and Station-Type Cubicle Switchgear: Current Transformer Accuracies, upgrading current transformer requirements[a]

— Addition of new definitions for mechanism-operated contact (MOC) and truck-operated contact (TOC) switches, as used in metal-clad (MC) switchgear

— Expansion of the momentary and short-time current withstand test requirements for buses and connections of the switchgear, as well as the addition of a momentary withstand test for the auxiliary equipment connections

— Clarification/expansion of the mechanical testing requirements, including an increase in the number of endurance cycles, a clarification of drawout interlocking, and a new requirement for circuit breaker mechanical endurance testing in the upper compartment of two-high assemblies

— Expansion of nameplate requirements to list a complete set of ratings

Additionally, this standard recognizes IEEE Std 4-1978 instead of the 1995 revision because the methods of correction for relative air density and humidity appropriate for metal-clad switchgear are not included in the 1995 revision. When the 1995 version is suitably revised to include rod gaps, it will supersede the 1978 version.

It is also noted that the altitude correction factors listed in Table 8 of this standard are under review by an IEEE Switchgear Committee working group. The old values are included in this document for reference until the working group releases the new values, at which time the new values will supersede those in the current Table 8.

This standard includes only the requirements for metal-clad switchgear. These requirements were previously a part of IEEE Std C37.20-1969, IEEE Standard for Switchgear Assemblies Including Metal-Enclosed Bus (1974 consolidated edition). Other types of equipment previously included in IEEE Std C37.20-1969 are incorporated in separate publications.

For many years, IEEE Std C37.20-1969 covered all switchgear assemblies, including metal-enclosed bus. Standards committees of the IEEE Switchgear Assemblies Subcommittee and the NEMA Power Switchgear Assemblies Technical Committee recommended that the document be further developed and, where appropriate, that the various sections be identified with their own standards. This approach also coordinates with the Conformance Test Procedure Standards.

The IEEE Switchgear Assemblies Subcommittee was responsible for this revision.

This publication is one of a series covering Switchgear Assemblies. Other members of the series are as follows:

IEEE Std C37.20.1-1993, IEEE Standard for Metal-Enclosed Low-Voltage Power Circuit Breaker Switchgear.

---

[a]Information on references can be found in Clause 2.

Copyright © 2000 IEEE. All rights reserved.

Copyright The Institute of Electrical and Electronics Engineers, Inc.
Provided by IHS under license with IEEE
No reproduction or networking permitted without license from IHS
Not for Resale

IEEE Std C37.20.2-1999, IEEE Standard for Metal-Clad Switchgear.

IEEE Std C37.20.3-1987 (Reaff 1992), IEEE Standard for Metal-Enclosed Interrupter Switchgear.

IEEE PC37.20.7/D14 Guide for Testing Metal-Enclosed Switchgear for Internal Arcing Faults.[b]

IEEE Std C37.21-1985 (Reaff 1998), IEEE Standard for Control Switchboards.

IEEE Std C37.23-1987 (Reaff 1991), IEEE Standard for Metal-Enclosed Bus and Calculating Losses in Isolated Phase Bus.

The following diagram depicts types of switchgear assemblies.

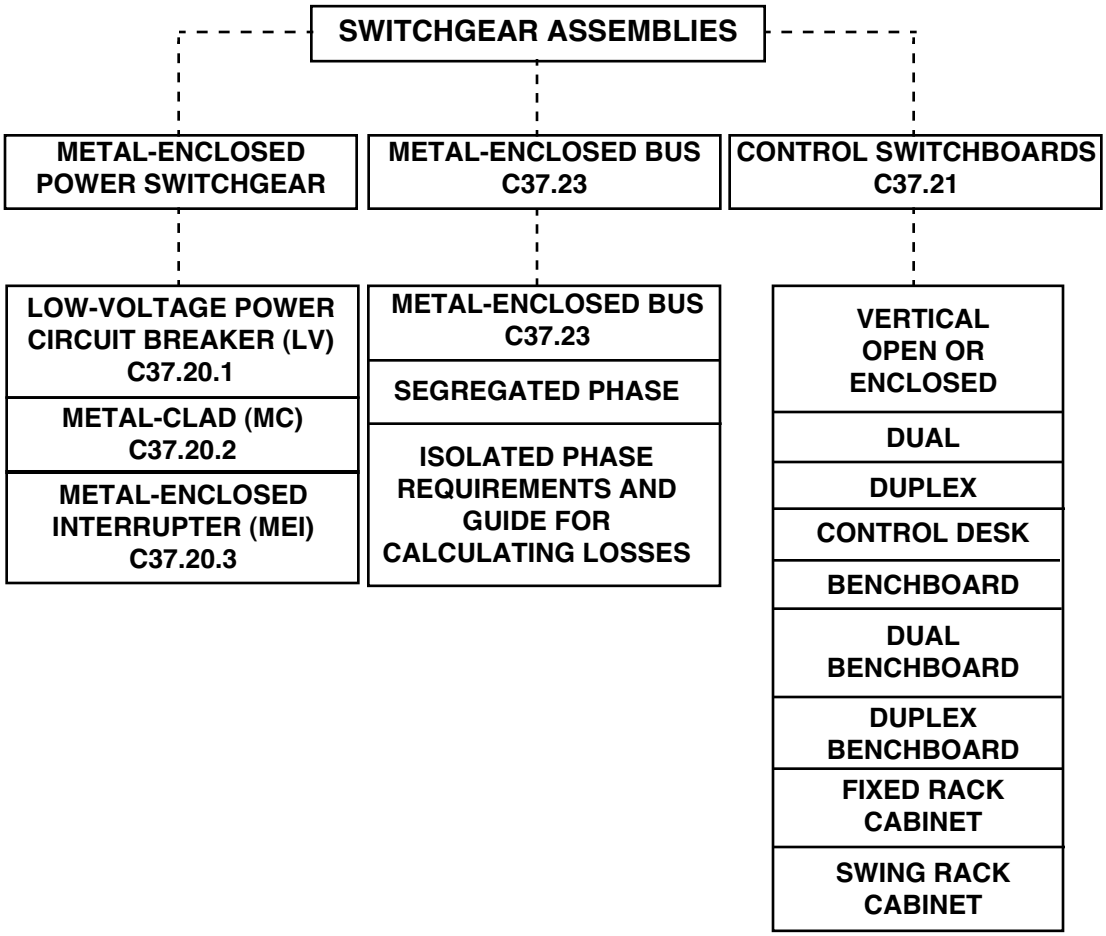

[b]This IEEE standards project was not approved by the IEEE-SA Standards Board at the time this publication went to press. For information about obtaining a draft, contact the IEEE.

Copyright © 2000 IEEE. All rights reserved.
Copyright The Institute of Electrical and Electronics Engineers, Inc.
Provided by IHS under license with IEEE
No reproduction or networking permitted without license from IHS
Not for Resale

Participants

The personnel of the IEEE Switchgear Assemblies Subcommittee (Working Group) who developed this standard were:

Michael Wactor, *Chair*

Eldridge R. Byron
Ward E. Laubach
T. W. Olsen
Robert J. Puckett
James C. Scott
Chand Z. Tailor
John H. Ugo

The Switchgear Assemblies Subcommittee of the IEEE Switchgear Committee that reviewed and approved this standard had the following personnel:

Ted A. Burse, *Chair*

Charles J. Ball
Eldridge R. Byron
Julian J. Dravis
Douglas J.. Edwards
Dave S. S. Gohil
Ram Iyer
Richard P. Jackson
Jerry M. Jerabek
Ward E. Laubach
David J. Lemmerman
William C. McKay
Paul J. Notarian
George R. Nourse
Gordon O. Perkins
Edward Peters
Robert J. Puckett
T. W. Olsen
Gerald Sakats
Stan H. Telander
John H. Ugo
Michael Wactor

The following members of the balloting committee voted on this standard:

Stuart Akers
Roy W. Alexander
Edwin Averill
Charles J. Ball
Seth Benson
Bill Bergman
Harvey L. Bowles
Matthew Brown
Ted Burse
Eldridge R. Byron
Carlos L. Cabrera-Rueda
Raymond L. Capra
James Carroll
R. Ted Childers
Alexander Dixon
Randall L. Dotson
Julian J. Dravis
Pete W. Dwyer
Douglas J. Edwards
Philip Fahey
Marcel Fortin
Ruben D. Garzon
Mietek T. Glinkowski
Keith I. Gray
David F Gray
Charles F. Henville
Harold L. Hess
Carlos Isaac
Robert Jeanjean
Douglas J. Jerabek
Joseph L. Koepfinger
Lu Kolarik
Alan E. Kollar
David G. Kumbera
Stephen R. Lambert
Thomas W. LaRose
Ward E. Laubach
John G. Leach
Albert Livshitz
William Long
Glenn J. Luzzi
James Marek
Deepak Mazumdar
Larry V. McCall
Nigel P. McQuin
John E. Merando, Jr.
Daleep C. Mohla
Georges F. Montillet
Yasin I. Musa
Franklin D. Myers
Paul J. Notarian
George R. Nourse
Raymond P. O Leary
T. W. Olsen
Miklos J. Orosz
Argus F. Parks
Neville Parry
Gordon O. Perkins
Edward Peters
Robert J. Puckett
R. Kris Ranjan
James C. Ransom
David N. Reynolds
Hugh C. Ross
Gerald Sakats
Hazairin Samaulah
Larry H. Schmidt
Curt A. Schwalbe
Devki Sharma
M. Dean Sigmon
James E. Smith
H. Mel Smith
R. Kirkland Smith
Guy St. Jean
David Stone
Alan D. Storms
David L. Swindler
Chand Z. Tailor
Stan H. Telander
Frederick C. Teufel
Thomas J. Tobin
Michael Wactor
Charles L. Wagner
Elbert M. Worland
Robert Yanniello
Larry E. Yonce
Janusz Zawadzki

Copyright © 2000 IEEE. All rights reserved.

Copyright The Institute of Electrical and Electronics Engineers, Inc.
Provided by IHS under license with IEEE
No reproduction or networking permitted without license from IHS
Not for Resale

The final conditions for approval of this standard were met on 1 October 1999. This standard was conditionally approved by the IEEE-SA Standards Board on 16 September 1999, with the following membership:

Donald N. Heirman, *Chair*
James T. Carlo, *Vice Chair*
Judith Gorman, *Secretary*

Satish K. Aggarwal
Mark D. Bowman
Gary R. Engmann
Harold E. Epstein
H. Landis Floyd
Jay Forster*
Howard M. Frazier
Ruben D. Garzon
James H. Gurney
Richard J. Holleman
Lowell G. Johnson
Robert J. Kennelly
Joseph L. Koepfinger*
Peter H. Lips
L. Bruce McClung
Daleep C. Mohla
James W. Moore
Robert F. Munzner
Ronald C. Petersen
Gerald H. Peterson
John B. Posey
Gary S. Robinson
Akio Tojo
Donald W. Zipse

*Member Emeritus

Also included is the following nonvoting IEEE-SA Standards Board liaison:

Robert E. Hebner

Noelle D. Humenick
IEEE Standards Project Editor

National Electrical Safety Code and NESC are both registered trademarks and service marks of the Institute of Electrical and Electronics Engineers, Inc.

National Electrical Code and NEC are both registered trademarks of the National Fire Protection Association, Inc.

Copyright © 2000 IEEE. All rights reserved.

Copyright The Institute of Electrical and Electronics Engineers, Inc.
Provided by IHS under license with IEEE
No reproduction or networking permitted without license from IHS
Not for Resale

Contents

1. Scope 1

2. References 1

3. Definitions, qualifying terms, and common or related terms 3

3.1 General 4
3.2 Qualifying terms 5
3.3 Common or related terms 5

4. Service conditions 5

5. Ratings 6

5.1 General 6
5.2 Voltage and insulation levels 6
5.3 Rated power frequency 7
5.4 Rated current 7
5.5 Temperature limitations 8
5.6 Current transformer ratings 10
5.7 Current transformer accuracies 11

6. Tests 11

6.1 General 11
6.2 Design tests 12
6.3 Production tests 27
6.4 Conformance tests 28
6.5 Field dielectric tests 28

7. Construction 29

7.1 Buses and primary connections 29
7.2 Grounding 29
7.3 Control and secondary circuits and devices 30
7.4 Miscellaneous 34
7.5 Materials, finishes, and color 35
7.6 Precautionary labels 36
7.7 Barriers 36
7.8 Shutters 36
7.9 Insulating materials for covering buses and connections 36
7.10 Interlocks 37
7.11 Interchangeability of removable switching and interrupting devices 37
7.12 Primary fuses and transformers 37
7.13 Secondary disconnect devices 38
7.14 Control wiring 38
7.15 Handling device 38
7.16 Test cabinet 38
7.17 Indoor MC switchgear, access, and ventilation 38
7.18 Outdoor MC switchgear, access, and ventilation 38
7.19 Circuit breaker open/close position indication 39

--`,,`,,,-`-`,,`,,`,`,,`---

Copyright © 2000 IEEE. All rights reserved.

Copyright The Institute of Electrical and Electronics Engineers, Inc.
Provided by IHS under license with IEEE
No reproduction or networking permitted without license from IHS

Not for Resale

7.20 Enclosure categories 39
7.21 Ground and test devices 39
7.22 Load interrupter switches 39

8. Application guide for MC switchgear 39

8.1 Unusual service conditions 39
8.2 System characteristics—voltage and frequency 43
8.3 Overvoltage considerations—insulation levels 43
8.4 Continuous current rating and overload capability 44
8.5 Short-circuit considerations 51
8.6 Nuclear power plant application 51
8.7 Associated devices often used in MC switchgear 51
8.8 Protection and isolation of switchgear connected to other circuit protective equipment 52

9. Guide for handling, storage, and installation 53

9.1 General 53
9.2 Handling 53
9.3 Preoperation check 55
9.4 Removable elements 55
9.5 Interlocks 55
9.6 Energizing 56

Annex A (informative) Guide for enclosure categories and related requirements 57

Annex B (informative) Bibliography 64

Copyright © 2000 IEEE. All rights reserved.

Copyright The Institute of Electrical and Electronics Engineers, Inc.
Provided by IHS under license with IEEE
No reproduction or networking permitted without license from IHS
Not for Resale

IEEE Standard for Metal-Clad Switchgear

1. Scope

This standard covers metal-clad (MC) switchgear containing, but not limited to, devices such as power circuit breakers, other interrupting devices, switches, control, instrumentation and metering, and protective and regulating equipment. It includes, but is not specifically limited to, equipment for the control and protection of apparatus used for power generation, conversion, and transmission and distribution.

This standard is concerned with enclosed, rather than open, indoor and outdoor switchgear assemblies rated above 1000 V ac. Included is equipment that is part of primary and secondary unit substations. Gas insulated substation equipment is not included.

2. References

This standard shall be used in conjunction with the following publications. When the standards referenced in this document are superseded by an approved revision, the revision shall apply in all cases except for IEEE Std 4, which shall remain the 1978 revision.

Accredited Standards Committee C2-1997, National Electrical Safety Code® (NESC®).[1]

ANSI C37.06-1997, American National Standard for Switchgear—AC High-Voltage Circuit Breakers Rated on a Symmetrical Current Basis—Preferred Ratings and Related Required Capabilities.[2]

ANSI C37.06.1-1997, American National Standard Trial-Use Guide for High-Voltage Circuit Breakers Rated on a Symmetrical Current Basis Designated “Definite Purpose for Fast Transient Recovery Voltage Rise Times.”

ANSI C37.22-1997, American National Standard Preferred Ratings and Related Required Capabilities for Indoor AC Medium-Voltage Switches Used in Metal-Enclosed Switchgear.

[1]The NESC is available from the Institute of Electrical and Electronics Engineers, 445 Hoes Lane, P.O. Box 1331, Piscataway, NJ 08855-1331, USA (http://standards.ieee.org/).

[2]ANSI publications are available from the Sales Department, American National Standards Institute, 11 West 42nd Street, 13th Floor, New York, NY 10036, USA (http://www.ansi.org/).

Copyright © 2000 IEEE. All rights reserved.

Copyright The Institute of Electrical and Electronics Engineers, Inc.
Provided by IHS under license with IEEE
No reproduction or networking permitted without license from IHS
Not for Resale

ANSI C37.54-1996, American National Standard Conformance Test Procedures for Indoor Alternating-Current Medium-Voltage Circuit Breakers Applied as Removable Elements in Metal-Enclosed Switchgear Assemblies.

ANSI C37.55-1989 (Reaff 1994), American National Standard for Metal-Clad Switchgear Assemblies—Conformance Test Procedures.

ANSI Z535.4-1998, American National Standard for Product Safety Signs and Labels.

ANSI/UL 486A-1991, Wire Connectors and Soldering Lugs for Use With Copper Conductors.[3]

ASTM B117-97, Standard Practice for Operating Salt Spray (Fog) Apparatus.[4]

ASTM D229-96, Standard Test Methods for Rigid Sheet and Plate Materials Used for Electrical Insulation.

ASTM D714-87 (Reapproved 1994), Standard Test Method for Evaluating Degree of Blistering of Paints.

ASTM D1535-97, Standard Practice for Specifying Color by the Munsell System.

ASTM D1654-92, Standard Test Method for Evaluation of Painted or Coated Specimens Subjected to Corrosive Environments.

ASTM D2303-96, Standard Test Methods for Liquid-Contaminant, Inclined-Plane Tracking and Erosion of Insulating Materials.

ASTM G21-96, Standard Practice for Determining Resistance of Synthetic Polymeric Materials to Fungi.

IEEE Std 1-1986 (Reaff 1992), IEEE Standard General Principles for Temperature Limits in the Rating of Electric Equipment and for the Evaluation of Electrical Insulation.[5]

IEEE Std 4-1978, IEEE Standard Techniques for High-Voltage Testing (to be superseded by the 1995 revision when the 1995 revision is supplemented to include methods for correction of relative air density and humidity using rod gaps).

IEEE Std 141-1993, IEEE Recommended Practice for Electric Power Distribution for Industrial Plants (IEEE Red Book).

IEEE Std 241-1990 (Reaff 1997), IEEE Recommended Practice for Electric Power Systems in Commercial Buildings (IEEE Gray Book).

IEEE Std 242-1986 (Reaff 1991), IEEE Recommended Practice for Protection and Coordination of Industrial and Commercial Power Systems (IEEE Buff Book).

IEEE Std 344-1987 (Reaff 1993), IEEE Recommended Practices for Seismic Qualification of Class 1E Equipment for Nuclear Power Generating Stations.

IEEE Std 446-1995, IEEE Recommended Practice for Emergency and Standby Power Systems for Industrial and Commercial Applications (IEEE Orange Book).

IEEE Std C37.04-1999, IEEE Standard Rating Structure for AC High-Voltage Circuit Breakers Rated on a Symmetrical Current Basis.

IEEE Std C37.09-1999, IEEE Standard Test Procedure for AC High-Voltage Circuit Breakers Rated on a Symmetrical Current Basis.

---

[3]UL standards are available from Global Engineering Documents, 15 Inverness Way East, Englewood, Colorado 80112, USA (http://global.ihs.com/).

[4]ASTM publications are available from the American Society for Testing and Materials, 100 Barr Harbor Drive, West Conshohocken, PA 19428-2959, USA (http://www.astm.org/).

[5]IEEE publications are available from the Institute of Electrical and Electronics Engineers, 445 Hoes Lane, P.O. Box 1331, Piscataway, NJ 08855-1331, USA (http://standards.ieee.org/).

Copyright © 2000 IEEE. All rights reserved.
Copyright The Institute of Electrical and Electronics Engineers, Inc.
Provided by IHS under license with IEEE
No reproduction or networking permitted without license from IHS
Not for Resale

IEEE Std C37.010-1999, IEEE Application Guide for AC High-Voltage Circuit Breakers Rated on a Symmetrical Current Basis.

IEEE Std C37.2-1996, IEEE Standard Electrical Power System Device Function Numbers and Contact Designations.

IEEE Std C37.11-1997, IEEE Standard Requirements for Electrical Control for AC High-Voltage Circuit Breakers Rated on a Symmetrical Current Basis.

IEEE Std C37.20.4-1996, IEEE Trial-Use Standard for Indoor AC Medium-Voltage Switches for Use in Metal-Enclosed Switchgear.

IEEE Std C37.20.6-1997, IEEE Standard for 4.76 to 38 kV Rated Grounding and Test Devices Used in Enclosures.

IEEE Std C37.24-1986 (Reaff 1998), IEEE Guide for Evaluating the Effect of Solar Radiation on Outdoor Metal-Enclosed Switchgear.

IEEE C37.81-1989 (Reaff 1994), IEEE Guide for Seismic Qualification of Class 1E Metal-Enclosed Power Switchgear Assemblies.

IEEE C37.90.1-1989 (Reaff 1994), IEEE Standard Surge Withstand Capability (SWC) Tests for Protective Relays and Relay Systems.

IEEE C37.90.2-1987, IEEE Trial-Use Standard Withstand Capability of Relay Systems to Radiated Electromagnetic Interferences from Transceivers.

IEEE Std C37.100-1992, IEEE Standard Definitions for Power Switchgear.

IEEE C37.110-1996, IEEE Guide for the Application of Current Transformers Used for Protective Relaying Purposes.

IEEE Std C57.13-1993, IEEE Standard Requirements for Instrument Transformers.

NEMA CC l-1993, Electrical Power Connectors for Substations.[6]

NEMA LI l-1989, Industrial Laminated Thermosetting Products.

NEMA WC 5-1992, Thermoplastic-Insulated Wire and Cable for the Transmission and Distribution of Electrical Energy.

NEMA WC 7-1998, Cross-Linked-Thermosetting-Polyethylene-Insulated Wire and Cable for the Transmission and Distribution of Electrical Energy.

NEMA 260-1996, Safety Labels for Pad-mounted Switchgear and Transformers Sited in Public Areas.

NFPA 70-1999, National Electrical Code® (NEC®).[7]

3. Definitions, qualifying terms, and common or related terms

The definitions of terms contained in this standard, or in other standards referred to in this standard, are not intended to embrace all legitimate meanings of the terms. They are applicable only to the subject matter treated in this standard.

[6]NEMA publications are available from Global Engineering Documents, 15 Inverness Way East, Englewood, Colorado 80112, USA (http://global.ihs.com/).

[7]The NEC is published by the National Fire Protection Association, Batterymarch Park, Quincy, MA 02269, USA (http://www.nfpa.org/). Copies are also available from the Institute of Electrical and Electronics Engineers, 445 Hoes Lane, P.O. Box 1331, Piscataway, NJ 08855-1331, USA (http://standards.ieee.org/).

Copyright © 2000 IEEE. All rights reserved.

Copyright The Institute of Electrical and Electronics Engineers, Inc.
Provided by IHS under license with IEEE
No reproduction or networking permitted without license from IHS
Not for Resale

If a term is not defined in this standard, the definition in IEEE Std C37.100-1992 applies. An asterisk (*) after a definition indicates that the definition in this standard is not contained in IEEE Std C37.100-1992, while a dagger (†) indicates that the definition differs from that in IEEE Std C37.100-1992.

3.1 General

3.1.1 auxiliary compartment: That portion of the switchgear assembly that is assigned to the housing of auxiliary equipment, such as voltage transformers, control power transformers, or other miscellaneous devices.*

3.1.2 circuit breaker compartment: That portion of the switchgear assembly that contains one circuit breaker or other removable primary interrupting device and the associated primary conductors.*

3.1.3 design tests: Tests made by the manufacturer to determine the adequacy of the design of a particular type, style, or model of equipment or its component parts to meet its assigned ratings and to operate satisfactorily under normal service conditions or under special conditions, if specified, and that may be used to demonstrate compliance with applicable standards of the industry.†

NOTES

1—Design tests are made on representative apparatuses or prototypes to verify the validity of design analyses and calculation methods and to substantiate the ratings assigned to all other apparatuses of basically the same design. These tests are not intended to be made on every design variation or to be used as part of normal production. The applicable portion of these design tests also may be used to evaluate modifications of a previous design and to ensure that performance has not been adversely affected. Test data from previous similar designs also may be used for current designs, where appropriate. Once made, the tests need not be repeated unless the design is changed so as to modify performance.

2—Design tests are sometimes called type tests.

3.1.4 mechanism-operated contact (MOC): A circuit breaker mechanism-operated auxiliary switch that is mounted in the stationary housing and is operated by linkage that cooperates with the circuit breaker mechanism.* *Syn:* **mechanism-operated cell switch**.

3.1.5 metal-clad (MC) switchgear: Metal-enclosed power switchgear characterized by the following necessary features:

a) The main switching and interrupting device is of the removable (drawout) type arranged with a mechanism for moving it physically between connected and disconnected positions and equipped with self-aligning and self-coupling primary disconnecting devices and disconnectable control wiring connections.

b) Major parts of the primary circuit, that is, the circuit switching or interrupting devices, buses, voltage transformers, and control power transformers, are completely enclosed by grounded metal barriers that have no intentional openings between compartments. Specifically included is a metal barrier in front of, or a part of, the circuit interrupting device to ensure that, when in the connected position, no primary circuit components are exposed by the opening of a door.

c) All live parts are enclosed within grounded metal compartments.

d) Automatic shutters that cover primary circuit elements when the removable element is in the disconnected, test, or removed position.

e) Primary bus conductors and connections are covered with insulating material throughout.

f) Mechanical interlocks are provided for proper operating sequence under normal operating conditions.

g) Instruments, meters, relays, secondary control devices, and their wiring are isolated by grounded metal barriers from all primary circuit elements with the exception of short lengths of wire such as at instrument transformer terminals.

Copyright © 2000 IEEE. All rights reserved.
Copyright The Institute of Electrical and Electronics Engineers, Inc.
Provided by IHS under license with IEEE
No reproduction or networking permitted without license from IHS
Not for Resale

h) The door through which the circuit-interrupting device is inserted into the housing may serve as an instrument or relay panel and also may provide access to a secondary or control compartment within the housing.

NOTES

1—Auxiliary vertical sections may be required for mounting devices or for use as a bus transition.

2—The term metal-clad (as applied to switchgear assemblies) is correctly used only in connection with switchgear conforming fully to the definition for metal-clad switchgear given in 3.1.5. Metal-clad switchgear is metal-enclosed, but not all metal-enclosed switchgear can be correctly designated as metal-clad.

3.1.6 metal-enclosed (ME) power switchgear: A switchgear assembly completely enclosed on all sides and the top with sheet metal (except for ventilating openings and inspection windows) containing primary power circuit switching or interrupting devices, or both, with buses and connections. The assembly may include control and auxiliary devices. Access to the interior of the enclosure is provided by doors or removable covers or both.†

3.1.7 production tests: Tests made for quality control by the manufacturer on every device or representative samples, or on required parts or materials to verify during production that the product meets the design specifications and applicable standards.†

NOTES

1—Certain quality assurance tests on identified critical parts of repetitive high-production devices may be tested on a planned statistical sampling basis.

2—Production tests are sometimes called routine tests.

3.1.8 tin-surfaced or equivalent: Metallic materials having satisfactory long-term performance that operate within the limits established for tin-surfaced electrical contact parts and conduction mechanical joints.*

3.1.9 truck-operated contact (TOC): A circuit breaker truck-operated auxiliary switch that is mounted in the compartment of a removable circuit breaker and is operated by the circuit breaker frame.* *Syn:* **truck-operated cell switch**

3.2 Qualifying terms

Qualifying terms are defined in The IEEE Standard Dictionary of Electrical and Electronics Terms [B1][8] and IEEE Std C37.100-1992[9], and the user is referred to the definitions given therein.

3.3 Common or related terms

Common or related terms are defined in IEEE Std C37.100-1992, and the user is referred to the definitions given therein.

4. Service conditions

Standards for the design and performance of MC switchgear are based on usual service conditions as described below. The selection of equipment for a particular application can be based on the construction and ratings as defined in this standard provided that the following usual service conditions exist:

a) The temperature of the cooling air (ambient air temperature) surrounding the enclosure of the MC switchgear is within the limits of –30 °C and 40 °C.

[8]The numbers in brackets correspond to those of the bibliography in Annex B.

[9]Information on references can be found in Clause 2.

Copyright © 2000 IEEE. All rights reserved.

Copyright The Institute of Electrical and Electronics Engineers, Inc.
Provided by IHS under license with IEEE
No reproduction or networking permitted without license from IHS
Not for Resale

b) The altitude of the installation does not exceed 1000 m (3300 ft).

c) The effect of solar radiation is not significant. (The principles stated in IEEE Std C37.24-1986 may be used for guidance.)

d) Unusual service conditions, such as those outlined in 8.1, do not prevail.

The user should review 8.1 for unusual service conditions and other considerations when preparing specifications for MC switchgear because those unusual conditions impact the equipment design.

5. Ratings

5.1 General

The ratings of a switchgear assembly are designations of operating limits under specified conditions of ambient temperature, temperature rise, etc. Where the switchgear assembly includes a combination of primary and secondary circuits, each may be given ratings. MC switchgear shall have the following ratings:

a) Rated maximum voltage

b) Rated power frequency

c) Rated insulation levels

d) Rated continuous current

e) Rated momentary withstand current

f) Rated short-time withstand current

The designated ratings in this standard are preferred but are not considered to be restrictive.

In addition to these ratings, a switchgear assembly may have interrupting or switching capabilities, which are determined by the rating of the particular interrupting and switching devices that are integral parts of the switchgear assembly. Refer to specific standards for the ratings of these devices.

5.2 Voltage and insulation levels

5.2.1 Rated maximum voltage

The rated maximum voltage of MC switchgear is the highest rms voltage for which the equipment is designed and is the upper limit for operation.

NOTE—MC switchgear may utilize voltage-sensitive components such as voltage transformers and surge arresters with a rated maximum voltage less than the rated maximum voltage of the MC switchgear. The upper limit for operation may be determined by the rating of these components.

5.2.2 Rated insulation levels

The rated insulation levels of MC switchgear shall consist of the following:

a) Power-frequency withstand voltage

b) Lightning impulse withstand voltage (BIL)

--`,,`,,,,-`-`,,`,,`,`,,`---
Copyright © 2000 IEEE. All rights reserved.
Copyright The Institute of Electrical and Electronics Engineers, Inc.
Provided by IHS under license with IEEE
No reproduction or networking permitted without license from IHS
Not for Resale

5.2.3 Voltages and insulation levels

The rated maximum voltages and corresponding insulation levels for MC switchgear are listed in Table 1.

5.3 Rated power frequency

The rated power frequency of a device or an assembly is the frequency of the circuit for which it is designed. All ratings in this standard are based on a rated power frequency of 60 Hz.

Table 1—Preferred voltage and insulation levels for MC switchgear

Rated maximum voltage (kV rms)	Insulation levels		
	Power frequency withstand kV rms)	Lightning impulse withstand (kV peak)	Reference[a] dc withstand (kV)
4.76	19	60	27
8.25	36	95	50
15.0	36	95	50
27.0	60	125	[b]
38.0	80	150	[b]

[a]The column headed dc withstand is given as a reference only for those using dc tests to verify the integrity of connected cable installations without disconnecting the cables from the switchgear. It represents values believed to be appropriate and approximately equivalent to the corresponding power frequency withstand test values specified for each voltage rating of switchgear. The presence of this column in no way implies any requirement for a dc withstand test on ac equipment or implies that a dc withstand test represents an acceptable alternative to the power frequency withstand tests specified in this standard for design tests, production tests, conformance tests, or field tests. In making dc tests, the voltage should be raised to the test value in discrete steps and held for a period of 1 min.

[b]Because of the variable voltage distribution encountered when making dc withstand tests, the manufacturer should be contacted for recommendations before dc withstand tests are applied to the switchgear.

NOTE—For field test values, see 6.5.

5.4 Rated current

5.4.1 Rated continuous current

The rated continuous current of MC switchgear is the maximum current in rms amperes at the rated power frequency, which can be carried continuously by the primary circuit components, including buses and connections, without causing temperatures in excess of specified limits for

a) Any primary or secondary circuit component.

b) Any insulating medium or structural or enclosing member.

The specified temperature limits applicable to switchgear assemblies are given in 5.5.1 through 5.5.6.

5.4.2 Continuous current ratings

The continuous current ratings of the main bus in MC switchgear are 1200 A, 2000 A, and 3000 A.

Copyright © 2000 IEEE. All rights reserved.

Copyright The Institute of Electrical and Electronics Engineers, Inc.
Provided by IHS under license with IEEE
No reproduction or networking permitted without license from IHS
Not for Resale

The continuous current rating of the individual circuit breaker compartment shall be equal to the ratings of the switching and interrupting devices used, except as may be modified by lower continuous current ratings of current transformers, power fuses, etc.

5.4.3 Rated momentary withstand current

The rated momentary withstand current of MC switchgear is the maximum rms total current that it shall be required to withstand. The current shall be the rms value, including the dc component, at the major peak of the maximum cycle as determined from the envelope of the current wave of the maximum offset phase during a test period of at least 10 cycles. The symmetrical current shall be the rated short-time current and the peak current value shall be 2.6 times its rated short-time current at the major peak of the maximum cycle (this is also referred to as the peak withstand current).

5.4.4 Momentary withstand current rating

The momentary withstand current rating of the individual circuit breaker compartments of MC switchgear shall be equal to one of the following:

a) The circuit breaker rated close and latch capability

b) Switch rated fault closing current

c) Momentary withstand current ratings or peak withstand current ratings of the switching devices used

See ANSI C37.06-1997 and/or ANSI C37.22-1997.

5.4.5 Rated short-time withstand current

The rated short-time withstand current of the MC switchgear assembly is the average rms symmetrical current that the bus and connections shall carry for 2 s.

NOTE—This is based on the maximum permissible tripping delay (Y) for indoor circuit breakers. Refer to IEEE Std C37.04-1999 and ANSI C37.06-1997, Table 1.

5.4.6 Short-time withstand current rating

The short-time withstand current ratings of the individual circuit breaker compartments of the MC switchgear shall be equal to the short-time ratings of the circuit breaker used. The use of certain current transformers and protective devices in the MC switchgear assembly may limit the duration to a value less than 2 s. When this occurs, it does not reduce the requirements for the bus and connections. The reduced duration shall be that of the current transformer or protective device utilized (see IEEE Std C57.13-1993).

5.5 Temperature limitations

5.5.1 Limiting temperature

The limiting temperature for MC switchgear is the maximum temperature permitted for

a) Any component, such as insulation, buses, instrument transformers, and switching and interrupting devices

b) Air in cable termination compartments

c) Any non current-carrying structural parts

d) Air surrounding devices

Copyright © 2000 IEEE. All rights reserved.
Copyright The Institute of Electrical and Electronics Engineers, Inc.
Provided by IHS under license with IEEE
No reproduction or networking permitted without license from IHS Not for Resale

5.5.2 Temperature limits for insulating materials

The total temperature to which insulating materials are subject shall not exceed the values listed in Table 2 for the various classes of insulating materials.

Table 2—Temperature limits for insulating materials as used in switchgear assemblies

Class of insulating material	Limit of hottest-spot temperature rise (°C)	Limit of hottest-spot total temperature (°C)
Class 90	50	90
Class 105	65	105
Class 130	90	130
Class 155	115	155
Class 180	140	180
Class 220	180	220

NOTE—For additional information on temperature limits, see IEEE Std 1-1986.

5.5.3 Temperature limits for buses and connections

The total temperature of buses and connections shall not exceed the values listed in Table 3.

Table 3—Temperature limits for buses and connections as used in switchgear assemblies

Type of bus or connection	Limit of hottest-spot temperature rise (°C)	Limit of hottest-spot total temperature (°C)
Buses and connections with unplated copper-to-copper connecting joints	30	70
Buses and connections silver-surfaced or equivalent connecting joints	65	105
Buses and connections tin-surfaced or equivalent connecting joints	65	105
Connection to insulated cables unplated copper-to-copper[a]	30	70
Connection to insulated cables silver-surfaced or equivalent[a]	45	85
Connections to insulated cables tin-surfaced or equivalent[a]	45	85

[a]Based on 90 °C insulated cable. Refer to 5.5.5.

NOTES

1—All aluminum buses shall have silver-surfaced or equivalent, or tin-surfaced or equivalent connecting joints. Welded bus connections are not considered connecting joints.

2—Refer to IEEE Std C37.100-1992 for the definition of *silver-surfaced or equivalent.*

Copyright © 2000 IEEE. All rights reserved.

Copyright The Institute of Electrical and Electronics Engineers, Inc.
Provided by IHS under license with IEEE
No reproduction or networking permitted without license from IHS
Not for Resale

5.5.4 Temperature limitations for air surrounding devices within an enclosed assembly

The temperature of the air surrounding all devices within an enclosed assembly, considered in conjunction with their rating and loading as used, shall not cause these devices to operate outside their rated temperature range when the enclosure of the assembly is surrounded by air within an ambient temperature range of –30 °C through 40 °C.

5.5.5 Temperature limitations for air surrounding insulated power cables

The temperature of the air surrounding insulated cables within any compartment of an enclosed assembly shall not exceed 65 °C when the assembly is

a) Equipped with devices having maximum current rating for which the assembly is designed.

b) Carrying rated continuous current at rated voltage and rated power frequency.

c) In an ambient air temperature of 40 °C.

NOTE—This temperature limitation is based on the use of 90 °C insulated power cables. Use of lower temperature rated cables requires special consideration.

5.5.6 Temperature limitations for external parts subject to contact by personnel

a) External parts handled by the operator in the normal course of his or her duties shall have no higher total temperature than 50 °C.

b) External surfaces accessible to an operator in the normal course of his or her duties shall have no higher total temperature than 70 °C.

c) External surfaces not accessible to an operator in the normal course of his or her duties shall have no higher total temperature than 110 °C.

5.6 Current transformer ratings

5.6.1 Current transformer mechanical rating

The mechanical ratings of current transformers shall be such that they will successfully withstand the momentary current for which the associated circuit interrupting devices are applied. When the primary circuit is protected by current-limiting fuses, the current transformers shall successfully withstand the maximum let-through current of the fuses. Unless specifically limited to a shorter time by the associated protective equipment, the duration of the momentary current shall be considered as being 10 cycles.

5.6.2 Current transformer thermal ratings

The thermal ratings of current transformers shall be such that they will successfully withstand the short-circuit current for which the associated circuit interrupting devices are applied. When the primary circuit is protected by fuses, the current transformers shall successfully withstand the maximum I^2t of the fuses. Unless specifically limited to a shorter time by the associated protective equipment, the duration of the short circuit current shall be considered as 1 s.

5.6.3 Current transformer ambient temperature

Current transformers for use in switchgear assemblies shall be rated on the basis of at least 55 °C ambient temperature in accordance with IEEE Std C57.13-1993.

Copyright © 2000 IEEE. All rights reserved.
Copyright The Institute of Electrical and Electronics Engineers, Inc.
Provided by IHS under license with IEEE
No reproduction or networking permitted without license from IHS
Not for Resale

5.7 Current transformer accuracies

For installation in MC switchgear, the standard current transformer accuracies for metering and relaying are listed in Table 4. Accuracies tabulated hereafter are the minimum that shall be supplied. The manufacturer should be consulted if higher accuracies are required by the purchaser. It should be recognized that wound-type current transformers with higher accuracies may not meet the requirements of 5.6.

When multi-ratio current transformers are supplied, the metering and relaying accuracies listed in Table 4 apply only to the full winding in accordance with IEEE Std C57.13-1993.

Table 4—Standard accuracy class ratings[a] for current transformers in MC switchgear

Ratio	B0.1	B0.2	B0.5	B0.9[b]	B1.8[b]	Relaying accuracy[c]
50:5	1.2	2.4[d]	—	—	—	C or T10
75:5	1.2	2.4[d]	—	—	—	C or T10
100:5	1.2	2.4[d]	—	—	—	C or T10
150:5	0.6	1.2	2.4[d]	—	—	C or T20
200:5	0.6	1.2	2.4[d]	—	—	C or T20
300:5	0.6	1.2	2.4[d]	2.4[d]	—	C or T20
400:5	0.3	0.6	1.2	1.2	2.4[d]	C or T50
600:5	0.3	0.3	0.3	1.2	2.4[d]	C or T50
800:5	0.3	0.3	0.3	0.6	1.2	C or T50
1200:5	0.3	0.3	0.3	0.3	0.3	C100
1500:5	0.3	0.3	0.3	0.3	0.3	C100
2000:5	0.3	0.3	0.3	0.3	0.3	C100
3000:5	0.3	0.3	0.3	0.3	0.3	C100
4000:5	0.3	0.3	0.3	0.3	0.3	C100

[a]See IEEE Std C57.13-1993.
[b]Note that these were formerly standard burdens of B1.0 and B2.0, respectively, which now are classified as relaying burdens in IEEE Std C57.13-1993.
[c]These accuracies may not be sufficient for proper relaying performance under all conditions. To ensure proper relaying performance, the user should make a careful analysis of CT performance considering the relaying requirements for the specific short circuit currents and secondary circuit impedances (see 8.7.1).
[d]This metering accuracy is not in IEEE Std C57.13-1993.

6. Tests

6.1 General

This subclause establishes physical and electrical conditions for tests and methods of determining temperatures and test values. All circuit breakers, apparatuses, and devices in the power circuit shall be mounted in their normal locations during tests. When the design allows for a circuit breaker to be located in

Copyright © 2000 IEEE. All rights reserved.

Copyright The Institute of Electrical and Electronics Engineers, Inc.
Provided by IHS under license with IEEE
No reproduction or networking permitted without license from IHS
Not for Resale

an upper or lower position, unless the position is specified by this document, tests shall be conducted with the circuit breaker in the position offering the more severe conditions. No statement in this subclause is to be construed as modifying the test requirements for devices included in switchgear assemblies.

Tests are classified as design tests, production tests, conformance tests, and field tests. These tests are defined in Clause 3.

NOTE—Except for the main switching or interrupting device, other devices such as voltage transformers and surge arresters that are mounted in the switchgear assemblies, must be disconnected during dielectric tests. Such devices are individually tested in accordance with the standards that apply to them.

6.2 Design tests

Design tests, as applicable, shall be made in accordance with 6.2.1 through 6.2.10. All design tests shall be made on representative arrangements of MC switchgear, as described below, to demonstrate the capability of the MC switchgear design to meet its assigned ratings and to operate under normal service conditions as outlined in Clause 4.

Each test arrangement construction shall contain a vertical circuit breaker section and an auxiliary section. There shall be a main bus in each section, and the test arrangement shall include a main bus splice. The main bus shall be typical and of the same current rating as the circuit breaker.

Each test arrangement shall include the maximum available number of current transformers per phase of standard accuracy class or greater, in accordance with Table 4, and shall be installed in the circuit breaker vertical section's standard locations. Current transformers shall have the secondary windings short-circuited and grounded for all tests and be rated as follows:

Circuit breaker rating (A)	Current transformer ratio
1200	1500:5
2000	3000:5
3000	4000:5

An auxiliary section of the test arrangement shall contain within one of its compartments a voltage transformer assembly with a disconnecting means and three voltage transformers connected wye-wye.

In the same test arrangement, a control power transformer disconnecting primary fuse assembly also shall be installed in one of the remaining compartments of the auxiliary section. Its primary stationary contacts also shall be connected to the main bus; however, connections from the load side contacts to a control power transformer are not required. Two fuses shall be installed for a standard line-line connection.

Exceptions to this arrangement or additional specifications are indicated in the individual test descriptions.

6.2.1 Dielectric tests

Power frequency withstand tests (see 6.2.1.1) and lightning impulse withstand tests (see 6.2.1.2) shall be performed on switchgear assemblies, as described in 6.2, to demonstrate the ability of the insulation system

Copyright © 2000 IEEE. All rights reserved.
Copyright The Institute of Electrical and Electronics Engineers, Inc.
Provided by IHS under license with IEEE
No reproduction or networking permitted without license from IHS
Not for Resale

to withstand rated voltages in accordance with Table 1. In addition, dielectric tests shall be made on the bus-bar insulation, as specified in 6.2.1.3.

The tests on the insulation system shall be made under the temperature and humidity conditions normally prevailing at the test site with appropriate correction factors for relative air density and humidity applied as outlined in IEEE Std 4-1978. Humidity correction factors shall be based on curves for rod gaps as stated in IEEE Std 4-1978, Table 1.3. The equipment shall be clean and in good condition.

Test voltages shall be applied between the primary circuits and ground in the following manner:

a) For equipment with stationary mounted devices and for equipment with drawout devices with the removable elements in the connected position:
   1) With the switching device contacts closed; between each phase of the switchgear assembly individually with the frame and all other phases grounded.
   2) With the switching device contacts open; between each terminal (incoming and outgoing) of the switchgear assembly with the frame and other terminals grounded.

b) For equipment with drawout devices with the removable elements in the test position and the main switching devices in the closed position, apply the test voltage to primary circuits:
   1) Simultaneously to all the incoming terminals of the switchgear assembly with the frame and outgoing terminals grounded. Repeat tests by applying test voltage to the outgoing terminals with the frame and incoming terminals grounded.
   2) Simultaneously between all incoming and outgoing terminals of the switchgear assembly. The test shall be made with a value of voltage 10% higher than that specified in Table 1. This test may be omitted if the equipment has grounded metal shutters (see 7.8).

NOTES

1—For the test across the open gap at 10% higher voltage, an intermediate point of the voltage source may, if practicable, be connected to ground and to the frame of the assembly so that the voltage between any live part and the frame will not exceed that specified in Table 1. If this is not practical, the frame may be insulated from ground.

The power contacts of the removable element need not be grounded, although the frame will be grounded.

2—Successful completion of these tests does not necessarily provide assurance that with the circuit breaker in the test position, it will always flashover to ground instead of across the gap between line and load terminals. Switchgear insulation does not provide surge protection for the open gap. Where surge protection of the gap is required, suitable protective devices must be applied.

Power-frequency withstand tests, lightning impulse withstand tests and, where applicable, bus-bar insulation tests and wet tests on entrance bushings shall be made as outlined in the following subclauses.

6.2.1.1 Power frequency withstand tests

The ac test voltage shall have a crest value equal to 1.414 times the rms value specified in Table 1. The wave shape shall be essentially sinusoidal. The frequency shall be within ±20% of the rated power frequency. The test voltage is to be increased gradually from zero to reach the required test value within 60 s and shall be held at that value for 1 min.

6.2.1.2 Lightning impulse withstand tests

The standard lightning impulse is a full wave impulse with a virtual front time of 1.2 μs and a virtual time to half the value as specified in Table 1 of 50 μs. It is described as a 1.2 μs × 50 μs impulse test wave. In these tests, three positive and three negative impulse voltages shall be applied to each point without causing damage or flashover. If flashover occurs on only one test during any group of three consecutive tests, nine

--`,,`,,,,-`-`,,`,,`,`,,`---
Copyright © 2000 IEEE. All rights reserved.

Copyright The Institute of Electrical and Electronics Engineers, Inc.
Provided by IHS under license with IEEE
No reproduction or networking permitted without license from IHS
Not for Resale

more tests shall be made (referred to as the 3 × 9 test). If the equipment successfully withstands all nine of the second group of tests, the flashover in the first group shall be considered as a random flashover and the equipment shall be considered as having successfully passed the tests. The wave shape, used to define the limits, is described in IEEE Std 4-1978.

NOTES

1—Some insulating materials retain a charge after an impulse test, and in these cases, care should be taken when reversing the polarity. To allow the discharge of insulating materials, the use of appropriate methods, such as the application of impulses of the reverse polarity at lower voltage before the tests, is recommended.

2—An alternative test consisting of 15 positive and 15 negative impulse voltages as described above may be applied. A total of two flashovers can occur during any of the 15 consecutive tests (referred to as the 15 × 2 test). If the equipment withstands 13 of the 15 tests, it is considered to have passed the test.

6.2.1.3 Test for bus-bar insulation

The insulated bus-bar sample shall have a rated maximum voltage at the rated power frequency applied from the conductor to an electrode effectively covering the outer surface of the insulation but sufficiently far from the ends of the sample to be able to withstand the test voltage. The insulated bus-bar sample shall have construction that is typical of bus bars, elbows, splices, and joints as used in the manufacturer's design. The ac test voltage shall have a value not less than the appropriate rated maximum voltage as shown in Table 1. The ac test voltage shall have a crest value greater than or equal to 1.414 times the rms value, and the wave shape shall be essentially sinusoidal. The test voltage shall be applied for 1 min.

NOTES

1—Suggested external electrodes are conductive paint and metallic foil or equivalent. For higher voltages, the sample may be immersed in a suitable insulation media, such as oil, to minimize the sample size. Care must be taken to prevent the external insulation media from penetrating the test area between the sample insulation and the electrodes.

2—This test is required on only one insulated bus-bar test sample for each rated voltage.

6.2.1.4 Wet tests on entrance bushings

These tests are to be conducted in accordance with IEEE Std 4-1978.

6.2.2 Rated continuous current tests

To determine compliance with continuous current ratings, it is necessary to determine that temperatures of the various components of the switchgear assembly, as described in 6.2, are within the limits set forth in 5.5. Temperature measurements shall be made in accordance with 6.2.2.1 through 6.2.2.7.

6.2.2.1 Test arrangements

6.2.2.1.1 Equipment configuration

If the equipment is designed for circuit breakers in an upper compartment or for stacking circuit breakers in the same vertical section, the following configurations must be tested:

a) Lower compartment only with highest rated circuit breaker utilized
b) Upper compartment only with highest rated circuit breaker utilized
c) Both compartments with circuit breakers applied as described in Table 12

6.2.2.1.2 Test area conditions

Temperature tests shall be conducted in a test area that is reasonably free from drafts.

Copyright © 2000 IEEE. All rights reserved.
Copyright The Institute of Electrical and Electronics Engineers, Inc.
Provided by IHS under license with IEEE
No reproduction or networking permitted without license from IHS
Not for Resale

6.2.2.2 Ambient-air-temperature limits

Tests may be made at any ambient air temperature between 10 °C and 40 °C.

6.2.2.3 Measurement of ambient air temperature

Ambient air temperatures shall be determined by taking the average of the readings of three temperature-measuring devices, such as thermometers or thermocouples, placed as follows:

a) One level with the top of the structure.
b) One 30 cm (12 in) above the bottom of the structure.
c) One midway between the two above positions.
d) All temperature-measuring devices shall be placed 30 cm (12 in) from the structure, not in front of ventilators, and in locations not affected by drafts caused by the structure or appreciable radiation from the equipment. When the ambient air temperature is subject to variations that might result in errors in measuring the temperature rise, the temperature-measuring devices should be immersed in a suitable liquid such as oil, in a suitable container or reliably attached to a suitable mass of metal.

NOTE—A convenient form for such a container consists of a metal cylinder with a hole drilled partly through it. This is filled with liquid and the temperature-measuring device is placed therein. The container shall be at least 2.5 cm (1 in) in diameter and 5.0 cm (2 in) high.

6.2.2.4 Method of measuring temperature

Thermocouples shall be used to measure the temperature at the required locations on the switchgear assembly test arrangement. The thermocouples, when used for measuring the temperature of insulation, shall be located on the current-carrying member or other metal part. Thermocouples used for measuring the temperature of the circuit breaker separable primary contacts shall be located approximately 13 mm (0.5 in) from the contacts on the current-carrying member. For cable terminations, the thermocouples shall be located at the junction of the conductor and its insulation.

Thermocouples shall be held in intimate contact with the conductor surface by methods such as welding, drilling and peening, or cementing.

The thermocouples on a design test shall be located so that they measure the hottest spot even though this may involve drilling holes that destroy some parts. It is recognized that thermocouples cannot be located in the actual contact point of line or point contacts without destroying the effectiveness of such line or point contacts. Measurements shall be made at junction points of insulation and conducting parts to ensure against exceeding the temperature limits of the insulation.

6.2.2.5 Duration of tests

The continuous current test shall be made for a length of time that assures that the temperature rise of any monitored point in the assembly has not changed by more than 1 °C over a 1 h period, with readings being taken at not greater than 30 min intervals. The equipment is considered to have passed the test if the temperature limits in Table 2 and Table 3 have not been exceeded in any of the three readings.

6.2.2.6 Frequency of test current

The frequency of the test current shall not be less than the rated power frequency of the assembly tested. A sinusoidal wave shape is recommended.

Copyright © 2000 IEEE. All rights reserved.

Copyright The Institute of Electrical and Electronics Engineers, Inc.
Provided by IHS under license with IEEE
No reproduction or networking permitted without license from IHS
Not for Resale

6.2.2.7 Value of test current

The switchgear assembly may be tested at any convenient voltage using a three-phase source of power. Each individual phase current is to be maintained at no less than the rated continuous current. The test shall be made with alternating current that has a crest value equal to 1.414 times the rms test current.

6.2.2.8 Copper conductors for use in continuous current tests

Bus bars, as specified in Table 5, shall be utilized for connection to the main bus. Cables or bus bars, as specified in Table 6, should be utilized for connection to the circuit breaker outgoing terminals. If test arrangement internal bus sizes or configurations are different from those in Table 5 and Table 6, external bus sizes or configurations equal to internal bus bars may be substituted at the option of the manufacturer. The conductors shall have a minimum external length of 1.2 m (4 ft) and shall be insulated for the proper voltage rating in accordance with the manufacturer's practice.

6.2.3 Momentary withstand current tests

Three-phase momentary withstand current tests shall be made to demonstrate the mechanical capability of the structure, buses, and connections in MC switchgear, described in 6.2, to withstand the rated momentary withstand current of the assembly. The test sample shall be as described in 6.2 with the following exceptions allowed:

a) The circuit breaker may be replaced with an equivalently sized dummy circuit breaker, provided that the primary disconnecting devices are identical and the circuit breaker has been qualified by previous testing in a test enclosure conforming to ANSI C37.54-1996.

b) Voltage transformers, control power transformers, and associated disconnecting means and fuses are not required for these tests. If they are present in the test sample, they should not have any effect on the test and need not be removed.

c) The circuit resistance of each phase of the test sample shall be measured with a dc current of at least 100 A before the test as a baseline for performance evaluation.

This test also is referred to as the peak withstand current test.

Table 5—Copper conductors for use in continuous current tests (main bus)

Main bus rating (A)	Bus per terminal[a]	
	Quantity	Size [mm (in)]
1200	1	6.4 × 102 (1/4 × 4)
2000	2	9.5 × 102 (3/8 × 4)
3000	3	9.5 × 127 (3/8 × 5)

[a]When multiple bus bars are used, they are to be spaced a minimum of 9.5 mm (3/8 in) apart. Vertical or horizontal configuration shall be at the option of the manufacturer.

Shorting bars shall be equal in cross-sectional area to the main bus and shall be located outside the switchgear assembly.

NOTE—Metric values are given as direct conversions from the English values.

Copyright © 2000 IEEE. All rights reserved.
Copyright The Institute of Electrical and Electronics Engineers, Inc.
Provided by IHS under license with IEEE
No reproduction or networking permitted without license from IHS
Not for Resale

Table 6—Copper conductors for use in continuous current tests (outgoing terminals)

Circuit breaker rating (A)	Maximum size of copper conductor		
	Size of copper conductor[a]	Bus per terminal[b]	
		Quantity	Size [mm (in)]
1200	4–500 kcmil	—	—
2000	—	2	9.5 × 102 (3/8 × 4)
3000	—	3	9.5 × 127 (3/8 × 5)

[a]Tests based on cross-sectional area, not cable insulation classification.
[b]Where multiple bus bars are used, they are to be spaced 9.5 mm (3/8 in) apart. Vertical or horizontal configuration shall be at the option of the manufacturer.
NOTE—Metric values are given as direct conversions from the English values.

6.2.3.1 Primary bus and connections

6.2.3.1.1 Test current

The three-phase test current shall have peak and rms total values no lower than those specified in 5.4.3. The rms symmetrical current shall be no less than 90% of the required short-time withstand current. The peak current shall occur in an outside phase.

6.2.3.1.2 Test voltage

The test can be performed at any convenient voltage.

6.2.3.1.3 Test duration

The duration of current flow shall be no less than 10 cycles at rated power frequency.

6.2.3.1.4 Test connections

For a three-phase test:

a) The main bus incoming terminals shall be connected to the test circuit power source.

b) Test of the main bus shall be accomplished by placing the shorting bar at the end of the main bus opposite the incoming power connections such that a bus splice is included in the test circuit.

c) Test of the main bus and circuit breaker vertical section is accomplished by placing the shorting bar on the outgoing terminals of the circuit breaker vertical section. The test of the main bus [described in b) above] may be omitted if the bus splice is included in this test.

d) The MC switchgear assembly shall be grounded with a minimum of 4/0 copper conductor.

For a single-phase test, the current shall be reduced to a minimum 93% of the rated current specified in 5.4.3 and must flow in opposite directions through any two adjacent poles.

6.2.3.1.5 Performance

After the test, the switchgear shall have

a) No breakage of insulation or structural components.

Copyright © 2000 IEEE. All rights reserved.

Copyright The Institute of Electrical and Electronics Engineers, Inc.
Provided by IHS under license with IEEE
No reproduction or networking permitted without license from IHS
Not for Resale

b) No permanent deformation of bus bars sufficient to prevent the dielectric test requirements from being met.

c) No signs of pitting or welding of primary disconnecting devices.

d) The removable element must be capable of moving from the connected position to the disconnected position and back to the connected position via its intended means.

If the switchgear has not met the requirements of b) and c) at the conclusion of the test, additional testing shall be made to evaluate the area in question as follows:

— For item b), the dielectric tests described in 6.2.1.1 shall be repeated. The switchgear shall be considered to have passed the momentary current test if it successfully passes the dielectric tests.

— For item c), a dc resistance test across the tested circuit shall be made with a minimum of 100 A flowing through the circuit. The dc resistance of the equipment after the momentary current test shall not exceed 200% of the circuit resistance of the circuit before the test.

6.2.3.2 Ground bus

A single-phase momentary withstand test shall be made on the ground bus. The test parameters shall be as described in 6.2.3.1. The circuit resistance shall be measured with a dc current of at least 100 A before the test as a baseline for performance evaluation.

The short circuit shall be made between the ends of the ground bus and the nearest phase of the main bus opposite the incoming terminals. Refer to 6.2.3.1.4 for main bus to power source connections.

If a ground and test device is available for use in the equipment, refer to IEEE Std C37.20.6-1997 for an additional test for the circuit breaker enclosure ground connection.

6.2.3.2.1 Performance

After the test, the ground bus, joints, and connections shall have

a) No breakage of insulation or structural components.

b) No permanent deformation of bus bars sufficient to prevent the dielectric test requirements from being met.

A dc resistance test across the tested circuit shall be made with a minimum of 100 A flowing through the circuit. The dc resistance of the equipment after the momentary current test shall not exceed 200% of the circuit resistance of the circuit before the test.

If the switchgear has not met the requirements of b), a dielectric test described in 6.2.1.1 and 6.2.1.2 shall be repeated. The switchgear shall be considered to have passed the momentary current test if it successfully passes the dielectric tests.

6.2.4 Short-time withstand current tests

Short-time withstand current tests shall be made to demonstrate the thermal and mechanical withstand capability of the buses and connections in MC switchgear to carry the circuit breaker short-time withstand current for a period of 2 s without physical damage. This test may be conducted as a single-phase test. The test sample shall be as described in 6.2 with the following exceptions allowed:

Copyright © 2000 IEEE. All rights reserved.
Copyright The Institute of Electrical and Electronics Engineers, Inc.
Provided by IHS under license with IEEE
No reproduction or networking permitted without license from IHS Not for Resale

a) The circuit breaker may be replaced with an equivalently sized dummy circuit breaker provided that the primary disconnecting devices are identical and the circuit breaker has been qualified by previous testing.

b) Voltage transformers, control power transformers, and associated disconnecting means and fuses are not required for these tests. If they are present in the test sample, they should not have any effect on the test and need not be removed.

c) The circuit resistance shall be measured with a dc current of at least 100 A before the test as a baseline for performance evaluation.

6.2.4.1 Primary bus and connections

6.2.4.1.1 Test current

The current shall be monitored throughout the test and measured by the root-mean-square (rms) method described in IEEE Std C37.09-1999. The symmetrical value of the test current shall be no less than the rated short-time withstand current.

If the test current does not remain constant for the test duration, the value of the average symmetrical current squared times the actual duration of the test shall be no less than $2I^2$. The circuit power factor (X/R ratio) may be any convenient value.

The specified current value shall be required in only one phase of the three-phase test.

6.2.4.1.2 Test voltage

The test voltage may be any convenient value.

6.2.4.1.3 Test duration

The duration of the current flow shall be no less than 2 s (refer to 5.4.5). The demonstrated level of current shall be determined by integration of the current envelope over the required time, as described in IEEE Std C37.09-1999, Clause 7.

6.2.4.1.4 Test connections

6.2.4.1.4.1 Single-phase test

For a single-phase test:

a) The longest main bus incoming terminals shall be connected to the test circuit power source.

b) The return side of the test circuit power supply shall be connected to the outgoing side of the circuit breaker.

c) The switchgear assembly shall be grounded with a minimum of 4/0 copper conductor.

6.2.4.1.4.2 Three-phase test

For a three-phase test (made as part of the momentary test or as a separate test):

a) The main bus incoming terminals shall be connected to the test circuit power source.

Copyright © 2000 IEEE. All rights reserved.

Copyright The Institute of Electrical and Electronics Engineers, Inc.
Provided by IHS under license with IEEE
No reproduction or networking permitted without license from IHS
Not for Resale

b) Test of the main bus shall be accomplished by placing the shorting bar at the end of the main bus opposite the incoming power connections such that a bus splice is included in the test circuit.

c) Test of the main bus and circuit breaker vertical section is accomplished by placing the shorting bar on the outgoing terminals of the circuit breaker vertical section.

d) The MC switchgear assembly shall be grounded with a minimum of 4/0 copper conductor.

6.2.4.1.5 Performance

After the test, the switchgear shall have

a) No breakage of insulation or structural components.

b) No permanent deformation of bus bars sufficient to prevent the dielectric test requirements from being met.

c) No signs of pitting or welding of primary disconnecting devices.

d) The removable element must be capable of moving from the connected position to the disconnected position and back to the connected position via its intended means.

If the switchgear has not met the requirements of b) and c) at the conclusion of the test, additional testing shall be made to evaluate the area in question as follows:

— For item b), the dielectric tests described in 6.2.1.1 shall be repeated. The switchgear shall be considered to have passed the short-time current test if it successfully passes the dielectric tests.

— For item c), a dc resistance test across the tested circuit shall be made with a minimum of 100 A flowing through the circuit. The dc resistance of the equipment after the short-time current test shall not exceed 200% of the circuit resistance of the circuit before the short-time current withstand test.

6.2.4.2 Ground bus

The ground bus shall be capable of carrying the rated short-time withstand current for the MC switchgear assembly for 2 s and shall be tested single-phase. The test parameters shall be as described in 6.2.4.1. The short circuit shall be made between the ends of the ground bus and the nearest point on the main bus opposite the incoming terminals. Refer to 6.2.4.1.4 for main bus to power source connections. The circuit resistance shall be measured with a dc current of at least 100 A before the test as a baseline for performance evaluation.

If a ground and test device is available for use in the equipment, refer to IEEE Std C37.20.6-1997 for an additional test for the circuit breaker enclosure ground connection.

6.2.4.2.1 Performance

After the test, the ground bus, joints, and connections shall have

a) No breakage of insulation or structural components.

b) No permanent deformation of bus bars sufficient to prevent the dielectric test requirements from being met.

A dc resistance test across the tested circuit shall be made with a minimum of 100 A flowing through the circuit. The dc resistance of the equipment after the short-time withstand current test shall not exceed 200% of the circuit resistance of the circuit before the short-time withstand current test.

Copyright © 2000 IEEE. All rights reserved.
Copyright The Institute of Electrical and Electronics Engineers, Inc.
Provided by IHS under license with IEEE
No reproduction or networking permitted without license from IHS
Not for Resale

If the switchgear has not met the requirements for b), the dielectric tests described in 6.2.1.1 shall be repeated. The switchgear shall be considered to have passed the short-time withstand current test if it successfully passes the dielectric tests.

NOTE—If the test currents of 6.2.3 and 6.2.4 can be met with the same test circuit, these tests may be combined.

The tests conducted in 6.2.3 and in 6.2.4 are to demonstrate the thermal and mechanical capability of the main bus ground bus and their connections. Connections on the outgoing terminals of protective devices may be limited to a reduced short-time current duration by those devices.

6.2.5 Auxiliary equipment primary disconnecting device momentary current withstand test

The primary disconnecting device and connecting bus or cable for VT and CPT auxiliary sections shall be capable of carrying the short-circuit current from a transformer failure until the primary fuse protection can operate. The test sample shall use fuses with the maximum rated peak let-through current allowed by the design.

6.2.5.1 Test current

The test current shall be a prospective value calibrated at the main bus connection point for the auxiliary section and no less than the peak, rms total, and rms symmetrical values specified in 5.4.3.

6.2.5.2 Test voltage

The test may be performed at any convenient voltage suitable for the fuse protection.

6.2.5.3 Test duration

The actual duration of current flow will be limited by operating time of the primary fuse protection for the transformer. The circuit shall be calibrated for a maximum duration of 10 cycles.

6.2.5.4 Test connections

For this test:

a) The test circuit power source shall be connected to the incoming terminals of the auxiliary section.

b) The short circuit connection shall be a bolted connection made phase-to-phase on the load side of the fuses using bus bar with a cross section equal to the connecting bus or cable of the same size as the transformer connections.

c) The switchgear shall be grounded with a minimum of 4/0 copper conductor.

6.2.5.5 Performance

After the test:

a) The primary disconnecting devices shall show no signs of burning.

b) All connections remain effective.

c) There shall be no breakage of insulation or structural components.

d) The drawout or tilt-out component of the auxiliary section must be capable of operation from the connected position to the disconnected position and back to the connected position via its intended means.

Copyright © 2000 IEEE. All rights reserved.

Copyright The Institute of Electrical and Electronics Engineers, Inc.
Provided by IHS under license with IEEE
No reproduction or networking permitted without license from IHS
Not for Resale

6.2.6 Mechanical endurance tests

Mechanical endurance tests are required to test the function of the mechanical interfaces within the switchgear.

6.2.6.1 Test arrangement

The switchgear assembly shall be as described in 6.2 and shall be equipped with the maximum number of cell switch (MOC and TOC) contacts permitted by the design.

Tests described in 6.2.6.2 a) shall be performed using the removable element with the highest continuous current rating designated for use in the given location.

Tests described in 6.2.6.2 b) shall be performed using the removable element with the highest rated no-load mechanical operating endurance capability designated for use in the given location.

When the design allows for a removable element in an upper or lower compartment (two-high construction), the highest rated continuous current circuit breaker with the highest no-load operating endurance capability shall be tested in the upper compartment. Both locations shall be tested when the design incorporates significant differences in the construction of any of the following:

a) MOC

b) TOC

c) Means of moving the removable element from the test position to the connected position

d) Mechanical interlocking devices

6.2.6.2 Test requirements

The following mechanical tests shall be performed:

a) A test consisting of moving the removable element, by its intended means, a minimum of 500 test cycles between the test and the connected positions to demonstrate the proper sequential operation and establish satisfactory function of the elements listed in Table 7.

b) A mechanical endurance test of the removable element installed in the connected position of the switchgear in accordance with the requirements established by the design test for the removable element (i.e., circuit breakers use ANSI C37.06-1997 and IEEE Std C37.09-1999). Maintenance intervals for both the removable element and the switchgear components shall be in accordance with the requirements of the removable element design test.

c) As applicable, a test of the stored energy discharge system consisting of charging the stored energy mechanism and discharging the energy in the intended manner for 100 operations. When stored energy discharge is part of moving the removable element between the test and connected positions, the tests shall be conducted for the full 500 test cycles required by 6.2.6.2.

6.2.6.3 Performance

After completion of these tests,

a) All functions outlined in Table 7 shall operate as designed.

b) The removable element shall be capable of operating from the connected to the disconnected positions by its intended means without difficulty.

c) The structural integrity of the switchgear shall be intact and in a condition to continue service.

Copyright © 2000 IEEE. All rights reserved.
Copyright The Institute of Electrical and Electronics Engineers, Inc.
Provided by IHS under license with IEEE
No reproduction or networking permitted without license from IHS Not for Resale

Table 7—Mechanism endurance tests

Element	Test point	Evaluation
Separable primary contacts	500 cycles	Check alignment, penetration, and wear
Separable control contacts	500 cycles	Check alignment, penetration, and wear
Circuit breaker removable element position interlocks	Every 50th cycle	Check function when moving the removable element to the withdrawn position
Stored energy mechanism interlocks, as applicable	Every 50th cycle	Check function when moving the removable element to the withdrawn position
MOC mechanism-operated auxiliary switch	Every 50th cycle	Check contact continuity with the removable element in all affected positions
TOC truck-operated auxiliary switch	Every 50th cycle	Check contact continuity with the removable element in all affected positions
Shutters	Every 50th cycle	Check function in the withdrawn and connected positions

NOTE—These tests should be performed with primary power removed.

6.2.7 Sheet, molded, or cast-insulating materials

Sheet, molded, or cast-insulating materials used for the isolation or support of primary conductors shall be tested for flame resistance and tracking resistance as in the following subclauses.

NOTE—While these insulation flame-resistance and tracking-resistance tests are not design tests applied to assembled switchgear, they are included here because of the wide variety of insulating materials used in switchgear assemblies and because of the relative importance of these properties. The only intent here is that such insulation materials shall meet the requirements of the specified test procedures. When the insulation design utilized includes cut edges in the tracking path, these edges shall not degrade the tracking resistance below that required by this standard.

6.2.7.1 Flame-resistance tests

Sheet, molded, or cast primary insulating materials used in switchgear assemblies shall have a minimum average ignition time of 60 s and a maximum average burning time of 500 s when tested in accordance with method II in ASTM D229-96.

6.2.7.2 Tracking-resistance tests

Tracking-resistance tests are required as follows:

a) Switchgear assemblies of rated maximum voltage of 4.76 kV and less. The material shall be tested in accordance with ASTM D2303-96 and under condition A (see 6.4.1.1 in NEMA LI 1-1989) with specimens of 6.4 mm (0.25 in) thickness shall have a minimum time to track to the 25 mm (1 in) mark of 20 min with 2500 V applied.

b) Switchgear assemblies of rated maximum voltage of 8.25 kV and greater. The material shall be tested in accordance with ASTM D2303-96 and under condition A (see 6.4.1.1 in NEMA LI 1-1989) with specimens of 6.4 mm (0.25 in) thickness shall have a minimum time to track to the 25 mm (1 in) mark of 300 min with 2500 V applied.

Copyright © 2000 IEEE. All rights reserved.

Copyright The Institute of Electrical and Electronics Engineers, Inc.
Provided by IHS under license with IEEE
No reproduction or networking permitted without license from IHS
Not for Resale

6.2.8 Flame-resistance tests for applied insulation

Applied insulation, such as fluidized bed systems, tape systems, or shrinkable-type tubing shall be tested as in the following subclauses.

6.2.8.1 Test apparatus

The test apparatus shall consist of the following (see Figure 1):

a) Test chamber of sheet metal 30 cm (12 in) wide, 36 cm (14 in) deep, and 61 cm (24 in) high that is open at the top and is provided with means for clamping the test specimen at the upper end and supporting it in a vertical position.

b) Means for adjusting the position of the test specimen.

c) Tirrill burner with an attached pilot light and mounted on a 20° angle block. The burner shall have a nominal bore of 9.5 mm (0.375 in) and a length of approximately 10 cm (4 in) above the primary air inlets.

d) An adjustable steel angle (fixture) attached to the bottom of the chamber to ensure the correct location of the burner with relation to the test specimen.

e) A supply of ordinary illuminating gas or equivalent at normal supply pressure.

f) Timer.

g) Flame indicators consisting of strips of gummed Kraft paper having a nominal thickness of 0.13 mm (0.005 in) and a width of 13 mm (0.5 in).

NOTE—The paper used for the indicators is known to the trade as Grade B stock and is material such as covering tape, paper, or gummed Kraft paper.

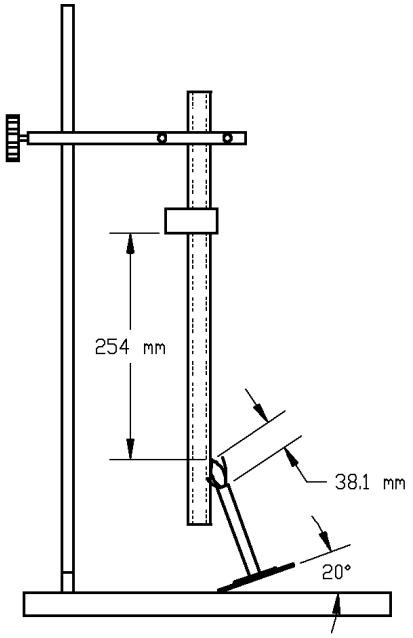

Figure 1—Test apparatus

Copyright © 2000 IEEE. All rights reserved.
Copyright The Institute of Electrical and Electronics Engineers, Inc.
Provided by IHS under license with IEEE
No reproduction or networking permitted without license from IHS
Not for Resale

6.2.8.2 Preparation of sample

Prepare a copper rod approximately 19 mm (0.75 in) in diameter, and 56 cm (22 in) in length with the necessary covering to be tested to a thickness of approximately 1.5 mm to 3.2 mm (60 mils to 125 mils).

6.2.8.3 Procedure

The test shall be made in a room that is reasonably free from drafts of air, although a ventilated hood may be used if air currents do not affect the flame. One end of the test specimen approximately 56 cm (22 in) in length shall be clamped in position at the upper end of the chamber. A paper indicator shall be applied to the specimen so that the lower edge is 25 cm (10 in) above the point at which the inner blue cone of the test flame is to be applied. The indicator shall be wrapped once around the specimen, with the gummed side toward the conductor.

The ends shall be pasted together evenly and shall project 19 mm (0.75 in) from the specimen on the opposite side of the specimen to that to which the flame is to be applied. The paper tab shall be moistened only to the extent necessary to permit proper adhesion. The height of the flame with the burner vertical shall be adjusted to 13 cm (5 in), with an inner blue cone 4 cm (1.5 in) high.

The burner, with only the pilot lighted, shall be placed in front of the sample so that the vertical plane through the stem of the burner includes the axis of the specimen. The angle block shall rest against the fixture, which shall be adjusted so that there is a distance of 40 mm (1.5 in) along the axis of the burner stem between the tip of the stem and the surface of the specimen. The valve supplying the gas to the burner proper shall then be opened and the flame shall be applied automatically to the sample. This valve shall be held open for 15 s and then closed for 15 s. This process shall be repeated four times. During each application of the flame, the specimen shall be adjusted, if necessary, so that the top of the inner blue cone touches the surface of the specimen.

6.2.8.4 Analysis

If more than 25% of the extended portion of the indicator is burned after the five applications of the flame, the specimen is considered to have conveyed flame. The duration of burning of the specimen after the fifth application of the flame shall be noted, and any specimen that continues to burn for more than 1 min shall be considered to have failed this test.

6.2.9 Coating (paint) qualification test

The coating (paint) qualification test applies to all enclosures that incorporate external ferrous parts. Nonferrous enclosures with no external ferrous parts need not be tested.

The coating qualification test shall be performed to ensure the adequacy of finishes to inhibit the buildup of rust on ferrous metal materials used for enclosures. The methods used are as follows.

6.2.9.1 Test specimens

Representative test panels of a 7.6 cm × 15 cm (3 in × 6 in) minimum size that can be accommodated by the test chamber shall be provided. Each specimen shall be uniformly processed in the standard production coating system. At least four panels shall be selected for the test. All the test specimens shall be of standard gauge ferrous metal equivalent to that used for the enclosure. The specimen shall be allowed to age for a minimum of seven days before being tested.

Copyright © 2000 IEEE. All rights reserved.

Copyright The Institute of Electrical and Electronics Engineers, Inc.
Provided by IHS under license with IEEE
No reproduction or networking permitted without license from IHS
Not for Resale

6.2.9.2 Test apparatus

The test apparatus shall consist of a fog chamber, salt solution reservoir, compressed-air supply, provisions for heating, and means of control. The conditions in the salt spray chamber, including the positioning of the specimens, content of the salt solution, and temperature and pressure to be maintained, shall be as defined in ASTM B117-97.

6.2.9.3 Preparation of test specimens

Two of the test panels shall be suitably scribed for testing in accordance with ASTM D1654-92.

6.2.9.4 Exposure of test specimens

All test specimens shall be tested in the salt spray chamber for a period of 200 h continuously except for the short, daily interruptions necessary to inspect the test specimen or replenish the solution in the reservoir.

6.2.9.5 Procedure

After completion of the exposure period, the scribed specimens shall be processed in accordance with either procedure A (air blow-off) or procedure B (scraper) of ASTM D1654-92.

6.2.9.6 Evaluation

The scribed specimens shall then be evaluated for creepage from the scribe mark in accordance with rating Table 1 in ASTM D1654-92. The nonscribed specimen shall be evaluated for degree of blistering in accordance with ASTM D714-87.

6.2.9.7 Performance

The scribed specimens shall be judged to have met the requirements of the test if their rating number is 5 or higher as determined by ASTM D1654-92. The nonscribed specimens shall be judged to have met the requirements of the test if their blistering size is No. 6 or higher and their frequency designation is F or M as determined by ASTM D714-87.

6.2.10 Rain test for outdoor MC switchgear

The enclosure to be tested shall be fully equipped and complete with all appurtenances, such as roof bushings, and placed in the area to be supplied with artificial precipitation. For multiple-unit construction, a minimum of two units shall be used to test the joints between units. A roof joint shall be included. The artificial precipitation shall be supplied by a sufficient number of nozzles to produce a uniform spray over the entire surface or surfaces under test. The various vertical surfaces of an enclosure may be tested separately or collectively provided that a uniform spray is simultaneously applied to both a) and b) as follows:

a) The roof surface, from nozzles located at a suitable height.

b) The floor outside the enclosure for a distance of approximately 0.9 m (3 ft) in front of the surface under test with the enclosure located at floor level.

The nozzles used for this test shall deliver a square-shaped spray pattern with uniform spray distribution and shall have a capacity of at least 0.45 L/s (7.1 gal/min) at a pressure of 4.1×10^5 Pa (60 lbf/in^2) and a spray

Copyright © 2000 IEEE. All rights reserved.
Copyright The Institute of Electrical and Electronics Engineers, Inc.
Provided by IHS under license with IEEE
No reproduction or networking permitted without license from IHS
Not for Resale

angle of approximately 75 degrees. The centerline of the nozzles shall be inclined downward so that the top of the spray is horizontal as it is directed toward the vertical and roof surfaces being tested.

The pressure at the nozzles shall be a minimum of 4.1×10^5 Pa (60 lbf/in^2) under flow conditions. This is approximately equivalent to rain driven by a 29 m/s (65 mph) wind. The quantity of water applied to each surface under test shall be at least 5 mm (0.2 in) per unit surface per minute, and each surface so tested shall receive this rate of artificial precipitation for a duration of 5 min. The spray nozzle shall not be more than 3 m (10 ft) from the nearest vertical surface under test.

After the test is completed, an inspection shall be made promptly to determine whether the enclosure meets the requirements of outdoor construction. More specifically, the equipment shall have satisfactorily met the requirements of this test if the visible inspection indicates

— No water on primary or secondary insulation

— No water on any electrical components or mechanisms of the assembly

— No significant accumulation of water retained by the structure or other noninsulating parts (to minimize corrosion)

NOTE—If it is impracticable to test the complete equipment, representative parts or smaller equipment with the same full-scale design details shall be tested.

6.3 Production tests

Production tests for MC switchgear shall be power-frequency dielectric tests, mechanical tests, grounding of instrument transformer case tests, and electrical operation and control wiring test. For these tests, the removable elements need not be tested in the assembly if they are tested separately.

6.3.1 Dielectric tests

Power frequency withstand tests shall be made on MC switchgear in accordance with the general requirements of 6.2.1, with the exception that tests across the open gap are not required. Tests shall be made between each phase and ground with the other phases grounded.

6.3.2 Mechanical operation tests

Mechanical tests shall be performed to ensure the proper functioning of shutters, mechanical interlocks, etc. These tests shall ensure the interchangeability of removable elements designed to be interchangeable.

6.3.3 Grounding of instrument transformer case tests

The effectiveness of instrument transformer case or frame grounding shall be checked by a low-voltage source, such as 10 V or less, using bells, buzzers, or lights. This test is required only when instrument transformers are of metal case design.

6.3.4 Electrical operation and control wiring tests

6.3.4.1 Control wiring continuity

The correctness of the control wiring of a switchgear assembly shall be verified by either or both of the following:

Copyright © 2000 IEEE. All rights reserved.

Copyright The Institute of Electrical and Electronics Engineers, Inc.
Provided by IHS under license with IEEE
No reproduction or networking permitted without license from IHS
Not for Resale

a) Actual electrical operation of the component control devices

b) Individual circuit continuity checks by electrical circuit testers

6.3.4.2 Control wiring insulation test

A 60 Hz test voltage shall be applied after all circuit grounds have been disconnected. Either 1500 V for 1 min or 1800 V for 1 s may be utilized. All wires shall be tested either individually or in groups. At the option of the manufacturer, switchgear mounted devices that have been individually tested may be disconnected during the test.

6.3.4.3 Polarity verification

Tests shall be made to ensure that connections between instrument transformers and meters or relays, etc., are correctly connected with proper polarities. Instruments shall be tested to ensure that pointers move in the proper direction. This does not require tests using primary voltage and current.

6.3.4.4 Sequence tests

MC switchgear involving the sequential operation of devices shall be tested to ensure that the devices in the sequence function properly and in the order intended.

This sequence test need not include remote equipment controlled by the switchgear assembly. However, this equipment may be simulated where necessary.

6.4 Conformance tests

Conformance test procedures for metal-clad switchgear are given in ANSI C37.55-1989.

6.5 Field dielectric tests

When power frequency withstand tests are to be made on MC switchgear after installation in the field, the switchgear shall not be tested at greater than 75% of the test values given in Table 1. Refer to 6.2.1 for the test procedure.

When dc voltage is used, the following additional precautions should be taken:

a) Wound-type current transformers with primary windings in the primary circuit must be disconnected or have the primary winding shorted.

b) The dc hipot voltage used must not exceed 75% of the values given in Table 1.

NOTE—Field tests are recommended when new units are added to an existing installation or after major field modifications. The equipment should be in good condition before the field test. It is not expected that equipment shall be subjected to these tests after it has been stored for long periods of time or has accumulated a large amount of dirt, moisture, or other contaminants without first being restored to good condition.

Copyright © 2000 IEEE. All rights reserved.
Copyright The Institute of Electrical and Electronics Engineers, Inc.
Provided by IHS under license with IEEE
No reproduction or networking permitted without license from IHS
Not for Resale

7. Construction

7.1 Buses and primary connections

Buses and primary connections shall be of copper or aluminum or both. For bus ratings, see 5.4.2.

7.1.1 Phase or polarity arrangements

a) The phase arrangement on three-phase assembled switchgear buses and primary connections shall be 1, 2, 3, from front to back, top to bottom, or left to right, as viewed from the front of the switchgear. Certain types of equipment may require other phasing arrangements and a neutral conductor. In these cases, the phasing shall be suitably indicated.

b) Panel-mounted devices shall be mounted in the same arrangement as in a) as viewed from the front of the panel.

7.1.2 Phase sequence

The phase sequence on connection diagrams shall be such that, when considering voltages to neutral on a polyphase system with respect to the element of time, the voltage of phase 1 will reach a maximum ahead of the voltage of phase 2, phase 3, etc. This sequence shall be designated as phase sequence in consecutive numerical order starting with 1.

7.1.3 Cable terminations

The MC switchgear shall provide space for the devices used for making electrical and mechanical connections to the incoming and outgoing cables as required. Each cable terminal connection point shall meet the bolt hole requirements of NEMA CC 1-1993.

7.1.4 Bushings, potheads, or other terminators

Space for mounting these devices shall be provided in the MC switchgear, as required.

7.1.5 Main bus splices

When bolts, nuts, and washers are provided for connecting through buses to other sections, the length of the bolts shall be such that the dielectric integrity is not impaired.

7.2 Grounding

A ground bus shall be included that will electrically connect together the structures in a switchgear assembly in or on which primary equipment or devices are mounted.

At all points of connection between the ground bus and the assembly, any nonconductive coatings, such as paint, shall be removed or penetrated to ensure good electrical contact.

The ground bus for each group of vertical sections shall have facilities for connection to a station ground bus by suitable conductors.

Circuit connections to the ground bus shall be made so that it is not necessary to open circuit the ground bus to remove any connection made to the ground bus.

Copyright © 2000 IEEE. All rights reserved.

Copyright The Institute of Electrical and Electronics Engineers, Inc.
Provided by IHS under license with IEEE
No reproduction or networking permitted without license from IHS
Not for Resale

Ground connections shall be provided for all removable elements to ensure that the frame and mechanism are grounded until the primary circuit is disconnected and the removable element is moved a safe distance (see IEEE Std C37.100-1992 for test or disconnected position definition).

When mounted on metal switchgear structures, cases of instruments, instrument transformers, meters, relays, and similar devices shall be considered as being adequately grounded when secured to these structures by metal mounting hardware with adequate provision for penetrating the paint film.

7.3 Control and secondary circuits and devices

7.3.1 General

All voltage circuits used for control, relaying, or metering shall be protected within the MC switchgear as follows:

a) All circuits supplied from external sources (ac or dc) shall have short-circuit protection. This may be provided by a single set of short-circuit protective devices within the control source incoming section.

b) All circuits supplied from internal sources (ac or dc) circuits shall have short-circuit protection within the same section as the supply source. If these circuits are supplied by a control power transformer, this protection may be in the primary circuit only.

   Overcurrent protection of voltage circuits may be provided in addition to the required short-circuit protection.

Other circuits supplying loads, such as heaters, receptacles, and lights, shall have overload and short-circuit protection.

Overcurrent protection of current transformer secondary circuits shall not be provided.

7.3.2 Voltage transformer fusing

The following requirements shall be met:

a) Primary circuits of all voltage transformers shall include current-limiting fuses

b) Secondary circuits of all voltage transformers shall include fuses or their equivalent

EXCEPTION: Fuses may be omitted from secondary circuits of voltage transformers if the secondary burden includes voltage regulators, protective relays, or other devices considered sufficiently essential to the operation of the installation to make it preferable to incur the hazards associated with the possible destruction of the voltage transformer by a sustained secondary short circuit rather than to risk interruption of the voltage supply to such devices as a result of a momentary secondary short circuit.

Primary and secondary protective devices may be omitted from voltage-dividing devices such as capacitive and resistive voltage dividers.

7.3.3 Control, secondary, and logic-level wiring

Flame-resistant, 600 V insulated stranded copper wire shall be used for internal wiring between components of switchgear assemblies and to terminals for connection to external controls, metering, or instrumentation. Wiring within components is assumed to be covered by standards applicable to those devices and is not

Copyright © 2000 IEEE. All rights reserved.
Copyright The Institute of Electrical and Electronics Engineers, Inc.
Provided by IHS under license with IEEE
No reproduction or networking permitted without license from IHS
Not for Resale

covered by this standard. Wiring for the purpose of conveying power to external switchgear loads is not covered by this clause.

The switchgear manufacturer is responsible for the performance of the wiring system provided by the manufacturer within the switchgear. This applies to the integrity of internally generated signals in the control wiring and may require the use of special precautions such as shielded wire and segregation of certain wires.

7.3.3.1 Wiring across a hinge

Wiring that crosses a hinge shall be suitable for this use, as defined by the following criteria:

a) The wire shall be sufficiently flexible to withstand repeated door movement without sustaining damage to wire strands or insulation.

b) The loop formed by the wiring as it crosses the hinge shall be secured to the equipment at both ends in such a manner that negligible strain is transmitted to wire beyond the securements.

c) The wire loop is to be protected between the securements to provide a degree of protection against damage to the wire insulation as the door is moved.

d) No sharp edges or objects are allowed in the path swept by the wire loop as the door is operated.

e) Wire shall be No. 14 AWG and larger, and C or D stranding.

7.3.3.2 Wire size

Wire must be suitable for the anticipated maximum steady-state load. The size chosen also must accommodate voltage drop within the switchgear, including the effect of intermittent heavy loads (shunt trip coils, inrush from relays, and the like). The following criteria shall be used as minimums:

Maximum steady-state load (A)	Minimum wire size (AWG)
30 < Load ≤ 40	No. 8
20 < Load ≤ 30	No. 10
15 < Load ≤ 20	No. 12
10 < Load ≤ 15	No. 14
7 < Load ≤ 10	No. 16
Load ≤ 7	No. 18

EXCEPTION: Multiple-conductor cable (two or more insulated wires inside a common insulated jacket) used in logic-level and/or supervisory circuits may use wire sized as required by the circuit.

Wiring for control loads over 40 A must be applied using ampacities from the 75° column of Table 310-16 in National Electrical Code® (NEC®) (NFPA 70-1999).

Wiring for current transformer and shunt trip circuits shall be no less than No. 14 AWG, regardless of load.

Thermocouple wiring is specifically excluded from the above ampacity requirements. It shall meet the voltage, current, and temperature requirements of the circuit in which it is used and the location where it is installed.

Copyright © 2000 IEEE. All rights reserved.

Copyright The Institute of Electrical and Electronics Engineers, Inc.
Provided by IHS under license with IEEE
No reproduction or networking permitted without license from IHS
Not for Resale

7.3.3.3 Wire protection and support

Bushings, grommets, or other mechanical protection shall be provided for wiring where it passes through a metal sheet, barrier, or raceway. Wiring shall be adequately supported to prevent stress from causing damage of any kind to the conductors or the insulation.

7.3.3.4 Wire type

Wiring shall be rated for 600 V, and 90 °C, and shall be flame-retardant. Wire shall be type SIS as listed in the NEC, or an equivalent such as XHHW, RFHH-2, or the like. Wire shall meet the requirements of NEMA WC 7-1998 as applicable.

7.3.4 Secondary-wiring terminals

Stranded control wire shall have solderless terminals of the type wherein the body of the terminal is crimped or indented onto the conductor. Solderless terminals are not required for connection to devices that have integral pressure terminal connectors. The wire may be soldered into terminals or, where desirable, directly to devices such as secondary disconnecting contacts, or to soldered terminals on supervisory control and annunciator equipment.

NOTE—In the absence within this standard of definitive performance requirements, compliance with this subclause can be assessed by referencing ANSI/UL 486A-1991.

7.3.5 Terminal blocks

Terminal blocks incorporating screw- or stud-and-nut-type terminals shall accommodate wire lugs or similar devices affixed to stranded wire. Screw- or stud-and-nut-type terminals intended for use with stranded wire shall be such that all strands of the conductor are confined. Terminal blocks that incorporate pressure connectors shall not damage the wire, and when terminating stranded conductors, all strands shall be clamped within the connector.

Terminal blocks for external connections shall be suitable to accept AWG No. 10 (10 380 nominal cmil) stranded wire.

The use of solid wire for external connections is not recommended.

NOTES

1—Where long connections to the control battery are necessary, the cable should be large enough to prevent excessive voltage drop.

2—In the absence within this standard of definitive performance requirements, compliance with this subclause can be assessed by referencing ANSI/UL 486A-1991.

7.3.6 Designation of auxiliary switches and contacts

The operation of auxiliary switches and contacts for circuit-interrupting and circuit-switching devices shall be designated as follows:

a	Open when the device is in the deenergized or nonoperated position
b	Closed when the device is in the deenergized or nonoperated position
aa	Open when the operating mechanism of the main device is in the deenergized or nonoperated position

Copyright © 2000 IEEE. All rights reserved.
Copyright The Institute of Electrical and Electronics Engineers, Inc.
Provided by IHS under license with IEEE
No reproduction or networking permitted without license from IHS
Not for Resale

bb Closed when the operating mechanism of the main device is in the deenergized or nonoperated position

e, f, h, k Special contacts and auxiliary switches other than a, b, aa, or bb

Auxiliary switches mounted on the stationary housing used to indicate the connected position of the removable element shall have a suffix TOC (truck-operated contact or truck-operated cell switch). The position of the removable element in which the contacts are closed or open shall be designated. The following are examples:

$\frac{52TOC}{NO(a)}$ open when the circuit breaker is not in the connected position

$\frac{52TOC}{NC(b)}$ closed when the circuit breaker is not in the connected position

Auxiliary switches mounted on the stationary housing operated by the circuit breaker to indicate circuit breaker open-closed position shall have a suffix MOC (mechanism-operated contact or mechanism operated cell switch). The open-closed position of the circuit breaker shall be designated for the contacts. The following are examples:

$\frac{52MOC}{a}$ open when circuit breaker is open

$\frac{52MOC}{b}$ closed when circuit breaker is open

If several auxiliary switches and contacts are present on the same device, they shall be designated numerically consecutive starting at 1, when necessary.

On diagrams of all types, contacts and switches shall be shown in the deenergized position of the device.

7.3.7 Device function numbers

Device function numbers shall be in accordance with IEEE Std C37.2-1996.

7.3.8 Voltage limits of instrument and control circuits

Voltage and current transformers shall be used for the instruments, meters, and relays connected to alternating-current circuits over 254 V ac to reduce the voltage on instrument wiring, which must necessarily be closely grouped.

All dc instruments, meters, and relays may be used directly on circuits up to 280 V dc if their cases are grounded to the switchgear structures in accordance with 7.2.

7.3.9 Polarity of dc connections to device coils

Where coils on devices used in MC switchgear are connected to a direct current supply and, when deenergized, are not disconnected from both the positive and negative supply leads, such coils shall be so connected that, when deenergized, they will be left connected to the negative supply lead to minimize the possibility of corrosion.

Copyright © 2000 IEEE. All rights reserved.

Copyright The Institute of Electrical and Electronics Engineers, Inc.
Provided by IHS under license with IEEE
No reproduction or networking permitted without license from IHS
Not for Resale

7.3.10 Isolation

Instruments, meters, relays, secondary control devices, and their wiring shall be isolated by grounded metal barriers from the primary circuit elements, with the exception of short lengths of wire such as at instrument transformer terminals and secondary disconnecting devices.

7.3.11 Control voltage ranges

Metal-clad switchgear shall be designed to accommodate the control voltage ranges of the components in accordance with the standards applicable to the various components. In particular, it should be noted that the control voltage limits (upper and lower) for components such as circuit breakers and protective relays differ from each other. The control wiring in the metal-clad switchgear shall be sized as necessary to ensure that the rated control voltage limits of the components are met.

7.4 Miscellaneous

7.4.1 Nameplate marking

The following minimum information shall be given on switchgear assemblies nameplates:

a) Manufacturer’s name and address (point of assembly)
b) Manufacturer’s type designation (optional)
c) Manufacturer’s identification reference
d) Rated maximum voltage (where applicable)
e) Rated power frequency (where applicable)
f) Rated insulation levels (power frequency withstand and lightning impulse withstand)
g) Rated continuous current
h) Rated short-time withstand current
i) Rated momentary withstand current
j) Date of manufacture

7.4.2 Wiring devices

Lighting fixtures provided in outdoor switchgear shall be of a type and shall be so located that lamps may be safely replaced without deenergizing the primary equipment. Convenience outlets shall be of the two-pole, three-wire grounding type and shall be protected by a ground-fault circuit interrupter.

7.4.3 Inspection windows

Windows provided for the inspection of disconnecting switches or other devices shall be of a material suitable for this application. Refer to A.3.6 for guidance.

7.4.4 Covers

For ease in handling, cover plates that are intended to provide access for inspection and maintenance shall not exceed 1.12 m^2 (12 ft^2) in area or 27 kg (60 lb) unless they are equipped with lifting means or hinges.

Copyright © 2000 IEEE. All rights reserved.
Copyright The Institute of Electrical and Electronics Engineers, Inc.
Provided by IHS under license with IEEE
No reproduction or networking permitted without license from IHS
Not for Resale

7.4.5 Ventilation openings and vent outlets

Openings for pressure relief or ventilation shall be arranged so that the gas or vapor escaping during normal operation will not endanger personnel operating the switchgear.

7.4.6 Service disconnecting means

Switchgear assemblies designated as the service disconnecting means shall be designed so that they can be installed in accordance with the applicable provisions of Article 230, part H, of the NEC.

7.5 Materials, finishes, and color

7.5.1 Materials

The materials for MC switchgear shall be sheet metal suitably supported. Barriers between adjacent vertical sections and between major parts of each primary circuit shall not be less than MSG No. 11 [nominal thickness of 3 mm (0.1196 in)]. All other covers, barriers, panels, and doors shall be not less than MSG No. 14 [nominal thickness of 1.9 mm (0.0747 in)].

The minimum thickness is based on the use of steel. When other metals are used, the thickness shall be modified to provide equivalent strength and deflection. For example, if aluminum alloy sheet with a yield strength of 140×10^6 Pa (20 000 lbf/in^2) is used in the place of sheet steel to provide equivalent strength and deflection, it is required that the thickness specified above be increased by 50%.

Doors or panels used to support devices shall be increased in thickness or otherwise strengthened, as necessary, to support the devices.

NOTE—Two sheets of suitable thickness may be used to obtain the equivalent thickness.

7.5.2 Finishes and color

All steel surfaces to be coated (painted) shall receive a phosphatizing treatment or equivalent before the application of the coating.

External and internal surfaces shall be coated with at least one coat of corrosion-resistant material. The finish paint or coating system shall comply with the requirement of 6.2.9.

The under surfaces of outdoor assemblies additionally shall receive either a corrosion-resistant undercoating or an additional thickness of corrosion-resistant material.

The preferred color for the finish on switchgear assemblies is light gray No. 61 in accordance with ASTM D1535-97 (Munsell notation 8.3 G6.10/0.54).

NOTES

1—Internal detail parts may have metallic plating or equivalent in lieu of paint finish.

2—For conformance testing a recognized organic coating system that has been investigated and found suitable for use as protection against atmospheric corrosion of electrical equipment steel enclosures for outdoor use may be utilized.

3—Exposed surfaces on outdoor equipment shall be coated with material capable of absorbing ultraviolet (UV) radiation without chalking or other damage.

Copyright © 2000 IEEE. All rights reserved.

Copyright The Institute of Electrical and Electronics Engineers, Inc.
Provided by IHS under license with IEEE
No reproduction or networking permitted without license from IHS
Not for Resale

7.6 Precautionary labels

Each MC switchgear should be provided with appropriate precautionary labels to call the user's attention to potential hazards that are inherent to the equipment and cannot be eliminated by design. See ANSI Z535.4-1998 and NEMA 260-1996 for recommendations.

7.7 Barriers

MC switchgear shall be provided with metal barriers between primary sections of adjacent vertical sections and between major primary sections of each circuit. Primary sections include the bus compartment, the primary entrance compartment, the removable element compartment, the voltage transformer(s) compartment, and the control power transformer(s) compartment. To minimize the possibility of communicating faults between primary sections, the barriers between primary sections shall have no intentional openings.

NOTES

1—Barriers are provided to segregate the voltage transformers for each polyphase circuit but not to segregate them individually.

2—Where buses penetrate barriers, suitable bushings or other insulation shall be provided.

7.8 Shutters

On MC switchgear, automatic shutters shall be provided to prevent incidental contact with the live parts of the primary circuit when the removable element is in the test position, is in the disconnected position, or has been removed.

7.9 Insulating materials for covering buses and connections

The insulation system for the primary or power-carrying conductors and connections shall be rated in accordance with Table 1 and shall withstand the tests in 6.2.1. Each conductor shall have an insulating covering that by itself will withstand the maximum rated line-to-line voltage between the conductor and the outside surface of the insulating covering for a period of 1 min.

This insulating covering is a requirement of metal-clad switchgear (see 3.1.5) and is provided to minimize the possibility of communicating faults and prevent the development of bus faults that would result if foreign objects momentarily contacted bare bus. This insulating covering is usually only a part of the primary insulation system, and in such cases the outer surface of this insulating covering will not be at ground potential. It should not be assumed, therefore, that personnel can contact this insulating covering with complete safety.

Where possible, bus joints shall be completely covered by insulating materials at the factory. For interconnecting bus joints that must be made in the field, insulating material shall be supplied for application in accordance with the switchgear manufacturer's instructions. Insulating material for line and load terminations may not be furnished as standard.

Insulating materials shall be flame-resistant in accordance with 6.2.7.

Copyright © 2000 IEEE. All rights reserved.
Copyright The Institute of Electrical and Electronics Engineers, Inc.
Provided by IHS under license with IEEE
No reproduction or networking permitted without license from IHS
Not for Resale

7.10 Interlocks

Mechanical interlocks shall be provided on metal-clad switchgear as follows:

a) To prevent moving the removable element to or from the connected position when the switching device is in the closed position.

b) To prevent closing the switching device unless the primary disconnecting devices are in full contact or are separated by a safe distance. See test position in IEEE Std C37.100-1992.

c) Means shall be provided for positively holding the removable element in place in the housing when it is in either the connected position or the test position. When a separate disconnected position is provided with the door closed, the removable element shall be positively held in this position.

d) To prevent the disconnection of and access to fuses on the primary side of control power transformers unless the secondary circuit is open.

e) Circuit breakers equipped with stored energy mechanisms shall be designed to prevent the release of the stored energy unless the mechanism has been fully charged. Operators and service personnel shall be protected from the effects of accidental discharge of the stored energy by any of the following means:

   1) Interlocks provided in the housing to prevent the complete withdrawal of the circuit breaker from the housing when stored energy mechanism is charged.
   2) A suitable device provided to prevent the complete withdrawal of the circuit breaker until the closing function is blocked.
   3) A mechanism provided to automatically discharge the stored energy before or during the process of withdrawing the circuit breaker from the housing. If the stored energy is discharged before the circuit breaker is moved from the connected position, an adjunct electrical interlock is required to prevent stored energy recharge.

f) Locking means shall be provided to prevent moving circuit breakers into the connected position.

7.11 Interchangeability of removable switching and interrupting devices

All removable elements of the same type and rating in a given assembly shall be mechanically and electrically interchangeable. Removable elements of equal or greater current and insulation ratings may be inserted in place of removable elements of equal or lesser current and insulation ratings when the design of the removable element and circuit breaker compartment allows mechanical interchangeability. Means shall be provided to prevent removable elements with lesser current and insulation ratings from being inserted into circuit breaker compartments with greater current and insulation ratings.

NOTE—Inserting a circuit breaker of a higher rating does not necessarily increase the capabilities of the switchgear assembly or imply that the assembly is capable of operation at the ratings of the circuit breaker.

7.12 Primary fuses and transformers

The primary fuses of transformers shall be mounted in such a way that they must be disconnected from the primary circuit before access can be obtained. Provisions shall be made for disconnecting or automatically grounding the secondary circuit of the voltage transformer when the primary circuit is disconnected. Provisions shall be made for grounding (momentary or maintained grounding is acceptable) the primary winding and/or fuses during the disconnecting operation.

Copyright © 2000 IEEE. All rights reserved.

Copyright The Institute of Electrical and Electronics Engineers, Inc.
Provided by IHS under license with IEEE
No reproduction or networking permitted without license from IHS
Not for Resale

7.13 Secondary disconnect devices

Control wiring connections between the stationary structure and the removable element shall be provided with automatic (self-coupling) contacts or a manual plug and receptacle for disconnection.

The manual control connector shall be either interlocked or inaccessible to prevent connection or disconnection of the control circuits when the removable element is in the connected position, and the removable element shall be prevented from being installed or closed in the connected position unless the manual control connector is connected.

With the manual arrangement, all connections shall be group-connectable simultaneously with the male contacts on the removable element and the female receptacles on the stationary structure.

NOTE—The intent of this requirement is to ensure that the circuit breaker control connections are always made and maintained when the circuit breaker is in the connected position.

One set of test jumpers or an equivalent means shall be provided for each installation to complete all secondary connections for test in the withdrawn position.

7.14 Control wiring

Power circuit breaker control wiring shall be in accordance with Figure 1, Figure 2, Figure 3, or Figure 4 of IEEE Std C37.11-1997.

7.15 Handling device

If required, one of each size handling device needed to remove the removable elements from metal-clad switchgear shall be provided for each installation.

7.16 Test cabinet

When a test cabinet is furnished, it shall provide connection to the secondary contacts on an electrically operated removable element, permitting operation and testing of the removable element when it is removed from the housing.

7.17 Indoor MC switchgear, access, and ventilation

MC switchgear for indoor applications shall be enclosed in general-purpose, ventilated enclosures equipped with front-hinged panels with hand-operated fasteners. Rear covers may be bolted or hinged with suitable means of securing. Ducts or grilles for venting exhaust gases shall be constructed so as to prevent foreign materials from entering the circuit breaker and shall meet the requirements of 7.4.5.

7.18 Outdoor MC switchgear, access, and ventilation

Enclosures (ventilated) for outdoor applications of MC switchgear shall be of either of the following types:

a) Outdoor enclosure without the operating and maintenance aisle that provides an enclosure for the switchgear and auxiliaries only. Doors shall be equipped with latches, stops shall be provided to

Copyright © 2000 IEEE. All rights reserved.
Copyright The Institute of Electrical and Electronics Engineers, Inc.
Provided by IHS under license with IEEE
No reproduction or networking permitted without license from IHS Not for Resale

hold the doors in the open position, and provision shall be made for padlocks. Heaters or other effective means shall be provided to minimize condensation.

b) Outdoor enclosure with the operating and maintenance aisle that provides an enclosure for the switchgear and auxiliaries and, in addition, provides an enclosed aisle for operating and maintenance. The aisle shall be of sufficient size to permit interchanging removable elements. The operating or maintenance aisle shall have access doors equipped with safety latches to permit opening from within under all conditions. Stops shall be provided to hold these doors in the open position and provision shall be made for padlocks. Heaters shall be provided to minimize condensation in compartments that contain primary circuit apparatuses and devices.

7.19 Circuit breaker open/close position indication

Indicating lights shall be provided to indicate the open and closed positions of the circuit breaker. Unless otherwise specified, the closed position shall be indicated by a red light and the open position by a green light.

7.20 Enclosure categories

See Annex A for the description of enclosure categories and related requirements.

7.21 Ground and test devices

When provided, these accessory devices can be inserted in place of a drawout circuit breaker for the purposes of either or both of the following:

a) Grounding the main bus and/or external circuits connected to the switchgear assembly

b) Primary circuit testing

These devices may be either electrically operated grounding devices or manual devices.

Owing to the varied and complex procedures required by specific operating practices, the user should consult the manufacturer regarding the intended use of the device (see IEEE Std C37.20.6-1996).

7.22 Load interrupter switches

When load interrupter switches, as covered by IEEE Std C37.20.4-1996, are utilized in MC switchgear as the main switching or interrupting device, they shall be mounted on a removable element and built to the requirements of this standard.

8. Application guide for MC switchgear

8.1 Unusual service conditions

It is strongly recommended that the usual service conditions, as described in Clause 4, be provided for MC switchgear applications, if practical (artificially, if necessary). However, if unusual conditions exist and cannot be eliminated, the considerations discussed in the following subclauses apply.

NOTE—Any unusual service condition should be specified by the user.

Copyright © 2000 IEEE. All rights reserved.

Copyright The Institute of Electrical and Electronics Engineers, Inc.
Provided by IHS under license with IEEE
No reproduction or networking permitted without license from IHS
Not for Resale

8.1.1 Ambient air temperature above 40 °C

When MC switchgear is applied where the ambient air temperature is higher than 40 °C, its performance may be affected, and special consideration should be given to these applications. The total temperature limits for parts and materials as listed in 5.5 should not be exceeded. Therefore, for the higher ambients, the equipment should be derated to a continuous current value that maintains the total temperature limits. In general, the derating may be calculated in accordance with 8.4.1.

8.1.2 Ambient air temperature below –30 °C

Special consideration also is required when MC switchgear is applied where the ambient air temperature is less than –30 °C for significant periods of time. Space heating and thermal insulation to minimize the effects of exposure should be considered. If this is not possible, the effect of low temperatures on the functional performance of such materials such as oils, plastic insulation on primary and secondary circuits, control wire insulation, and lubricants should be considered.

8.1.3 Application at unusual altitudes

Switchgear assemblies that depend on air for an insulating and cooling medium will have a higher temperature rise and a lower dielectric withstand capability when operated at altitudes above the values specified in item b) of Clause 4. For applications at higher altitudes, the rated maximum voltage, the rated 1 min power frequency withstand voltage, the lightning impulse withstand voltage (BIL), and continuous current rating of the assemblies should be multiplied by the correction factors in Table 8 to obtain the modified ratings. For applications above 1000 m (3300 ft), the use of surge arresters on each circuit selected to keep transient voltages below the reduced levels should be considered.

NOTE—Values given in Table 8 are currently under review by an IEEE Switchgear Committee working group. These values are given as a reference point until the revised values are available.

Table 8—Altitude correction factors (ACF)

Altitude (m)	Altitude (ft)	ACF for dielectric withstand voltage	ACF for continuous current
1000	3300	1.00	1.00
1200	4000	0.98	0.995
1500	5000	0.95	0.991
1800	6000	0.92	0.987
2000	6600	0.91	0.985
2100	7000	0.89	0.98
2400	8000	0.86	0.97
2700	9000	0.83	0.965
3000	10 000	0.80	0.96
3600	12 000	0.75	0.95
4000	13 000	0.72	0.94
4300	14 000	0.70	0.935

Copyright © 2000 IEEE. All rights reserved.
Copyright The Institute of Electrical and Electronics Engineers, Inc.
Provided by IHS under license with IEEE
No reproduction or networking permitted without license from IHS
Not for Resale

Table 8—Altitude correction factors (ACF) *(continued)*

Altitude (m)	Altitude (ft)	ACF for dielectric withstand voltage	ACF for continuous current
4900	16 000	0.65	0.925
5500	18 000	0.61	0.91
6000	20 000	0.56	0.90

NOTES

1—All values are under review by an IEEE Switchgear Committee working group and are provided here for reference until revised values are available.

2—Intermediate values may be obtained by interpolation.

3—For devices used in switchgear assemblies, standards covering the specific devices should be used to determine the specific altitude correction factors.

8.1.4 Modification of equipment for unusual environments

Successful performance of standard MC switchgear applied in unusual environments may require special considerations in developing equipment specifications. Several construction modifications that will mitigate the effects of these environments may be made in accordance with 8.1.4.1 through 8.1.4.6, but the emphasis should be on eliminating such conditions, if at all possible. However, if these undesirable conditions cannot be eliminated, more frequent maintenance may be required.

8.1.4.1 Exposure to damaging fumes, vapors, steam, salt air, and oil vapors

Indoor and outdoor equipment should be provided with the following modifications:

a) All structural parts should be covered with a corrosion or rust-resistant finish.

b) All steel parts that are not painted or plated should be covered with protective grease.

c) All current-carrying joints should be covered with a coating of nonoxidizing grease. Greasing of nonarcing contacts should be done only on the recommendations of the manufacturer.

d) All coils should be impregnated with insulating compound and covered with appropriate protective coating.

e) Heaters, in quantity and sufficient rating to minimize condensation in all compartments, should be furnished.

8.1.4.2 Exposure to excessive dust, abrasive dust, and magnetic or metallic dust

Indoor or outdoor equipment should be provided with the following modifications. Totally enclosed nonventilated equipment should be furnished with a current rating of 70% of the ventilated rating or as specified by the manufacturer. Condensation could be a problem and should be evaluated.

For outdoor assemblies, ventilated enclosures may be furnished with the ventilating openings equipped with dust filters. The requirements for these filters vary over such a range that standard specifications for their application are not practicable. Filters are available in the washable type and the disposable type. Where used, they must be cleaned or replaced at intervals, depending on the amount of dust in the air. Filters that are not cleaned or changed as required can cause excessive equipment temperature or condensation.

Copyright © 2000 IEEE. All rights reserved.

Copyright The Institute of Electrical and Electronics Engineers, Inc.
Provided by IHS under license with IEEE
No reproduction or networking permitted without license from IHS
Not for Resale

The type of filter used should be selected on the basis of the size of dust particles encountered and the extent to which dust is to be excluded. Where very fine dust particles are to be excluded, disposable filters soaked in oil should be used. These filters must be changed at frequent intervals.

Forced ventilation may be required depending on the volume of air required for ventilation and the severity of the environment. When a blower and filter are furnished on the basis of the conditions of the environment, they should be installed on the intake to minimize the possibility of drawing dust or other foreign matter into and throughout the switchgear assembly.

8.1.4.3 Exposure to hot and humid climates

Indoor and outdoor equipment intended for exposure to hot and humid climates should be made fungus-resistant by means of the following modifications:

a) Heaters in quantity and rating sufficient to minimize condensation in all compartments should be furnished.

b) Secondary wiring that is not inherently fungus-resistant should have fungus-resistant coating applied. Secondary wiring that has fungus-resistant insulation should not require further treatment.

c) All impregnated coils should be given an external treatment with fungus-resistant coating. Encapsulated coils that are inherently fungus-resistant should not require further treatment.

d) Paints such as alkyd enamels that have a fungus and rust-resistant property should be used.

Insulation that is not inherently fungus-resistant should have fungus-resistant coating applied. Insulation in switchgear assemblies that is inherently fungus-resistant should not require further treatment. Fungus-resistant coatings should not be applied when they will interfere with proper operation of apparatus. In such cases, the part should be inherently fungus-resistant. These coatings should not reduce the flame-resistant properties.

The fungus resistance of materials should be determined in accordance with ASTM G21-96. Materials to be classified as fungus-resistant should have a rating not greater than one.

Materials that are made fungus-resistant by means of a coating should have the coating reapplied at periodic intervals.

8.1.4.4 Exposure to explosive mixtures of dust or gases

Application of MC switchgear in classified (hazardous) locations is not recommended.

8.1.4.5 Exposure to abnormal vibration, shocks, or tilting

Indoor and outdoor equipment is designed for mounting on level structures free from vibration, shocks, or tilting.

Since these conditions vary so widely, it is recommended that the manufacturer be consulted for each specific application when vibration, shocks, or tilting are to be encountered.

It is important that the full nature of the abnormal motion be specified. The magnitude and frequency range of the dynamic motion are required so that resonances may be investigated. This usually is specified by means of an acceleration response spectrum curve for the mounting surface on which the MC switchgear is to be installed. The response spectrum is a plot of the maximum response of single-degree-of-freedom

Copyright © 2000 IEEE. All rights reserved.
Copyright The Institute of Electrical and Electronics Engineers, Inc.
Provided by IHS under license with IEEE
No reproduction or networking permitted without license from IHS
Not for Resale

bodies at a damping value expressed as a percentage of critical damping of different natural frequencies. These bodies are plotted when they are rigidly mounted on the surface of interest (i.e., on the ground for the ground response spectrum or on the floor for the floor response spectrum) when that surface is subjected to a given abnormal motion as modified by any intervening structures. The response spectrum is useful in designing a test or in making an analysis of the performance of the MC switchgear equipment mounted on the same surface and subjected to the same motion.

In the case of tilting, it is also important that the maximum angles of tilt, both transverse and longitudinal, be specified. The exact performance requirements also should be defined. It should be recognized that equipment that is specifically designed for a usual installation on a substantially level surface free from excessive vibration, shock, or tilting may be damaged and may not be able to function properly when subjected to excessive motion and displacement. Hence, the application should be carefully analyzed and the essential performance requirements should be precisely defined.

8.1.4.6 Exposure to seismic shock

Seismic capabilities are not required for medium-voltage metal-clad switchgear assemblies. For applications where seismic events are of concern, the following guidance is given:

Class 1: For critical equipment whose function both during and after the seismic event must be assured, see IEEE Std C37.81-1989.

Class 2: For equipment where misoperations during the seismic event can be accepted but maintaining structural integrity and the ability to function after the seismic event is required, IEEE Std C37.81-1989 can still be used by omitting the requirement to demonstrate equipment functionality during the seismic event and by reducing the generic response spectra levels by 50% (the full level spectra include the extra margin necessary for nuclear applications).

8.2 System characteristics—voltage and frequency

MC switchgear is designed for use on three-phase, 60 Hz, grounded or ungrounded ac systems. Application on other types of systems, such as the following, should be reviewed with the manufacturer:

a) Three-phase, four-wire with insulated neutral
b) Two-phase
c) Frequency other than 60 Hz or other than sinusoidal waveforms

MC switchgear is intended for application on systems where the maximum operating voltage of the system does not exceed the maximum voltage for which the equipment is designed. The voltages for various types of MC switchgear are listed in Table 1.

NOTE—MC switchgear may utilize voltage-sensitive components such as voltage transformers and surge arresters with a rated maximum voltage less than the rated maximum voltage of the MC switchgear. The upper limit for operation may be determined by the rating of these components.

8.3 Overvoltage considerations—insulation levels

The insulation levels to which MC switchgear is designed are listed in Table 1.

The information on the application of surge arresters and surge capacitors for protection against overvoltages is given in 8.7.2.

Copyright © 2000 IEEE. All rights reserved.

Copyright The Institute of Electrical and Electronics Engineers, Inc.
Provided by IHS under license with IEEE
No reproduction or networking permitted without license from IHS
Not for Resale

8.4 Continuous current rating and overload capability

MC switchgear assemblies are designed for normal application where the sustained load current does not exceed the rated continuous current, the altitude above sea level is 1000 m (3300 ft) or less, the ambient air temperature does not exceed 40 °C, and the effects of solar radiation can be neglected. For unusual altitudes, derating factors should be applied in accordance with 8.1.3. If solar radiation is significant, continuous current capability is limited (see IEEE Std C37.24-1986).

The rated continuous current is based on not exceeding the limits of the hottest spot total temperature of the various parts of the switchgear assembly when this value of current is sustained in an ambient air temperature of 40 °C. When the ambient air temperature is greater than 40 °C, the current should be reduced to less than the rated continuous current to keep the total temperature of these parts within the allowable limits. The application of switchgear assemblies should be based on avoiding operation at current higher than the rated continuous current of the assembly. However, since the criterion is total temperature, the following considerations are in order:

a) It is permissible to exceed rated continuous current
   1) For short periods, such as in the starting of motors or synchronous condensers, or when energizing cold loads. Generally, the short duration of this type of current increase does not raise temperatures significantly.
   2) When operating at an ambient air temperature below 40 °C (see 8.4.1).
   3) For short periods after operation at a current less than that permitted by the existing ambient air temperature (see 8.4.1.1).

b) Since current transformer and outgoing cable current ratings are frequently less than the continuous current rating of the circuit breaker, their capabilities to carry more than the rated continuous current must be verified.

8.4.1 Load current-carrying capabilities under various conditions of ambient temperature and load

When ambient air temperature is other than 40 °C, (the condition upon which the continuous ratings in 5.4.2 are based) the allowable continuous current can be calculated by the following formula:

$$I_a = I_r \left\{ \frac{\theta_{max} - \theta_a}{\theta_r} \right\}^{1/2}$$

where

I_a is the allowable continuous load current in amperes at the actual ambient temperature θ_a (I_a is not to exceed two times I_r)
I_r is the rated continuous current in amperes on basis of 40 °C ambient
θ_{max} is the allowable hottest spot total temperature, °C
θ_a is the actual ambient temperature expected (between –30 °C and 60 °C), °C
θ_r is the allowable hottest spot temperature rise at rated continuous current, °C

NOTE—The temperature rise of a current-carrying part is proportional to an exponential value of the current flowing through it. The exponent value of 1/2 in the formula observed has been found to be generally valid for calculating overload capability of MC switchgear and therefore is used in this standard.

Copyright © 2000 IEEE. All rights reserved.
Copyright The Institute of Electrical and Electronics Engineers, Inc.
Provided by IHS under license with IEEE
No reproduction or networking permitted without license from IHS
Not for Resale

The construction features of MC switchgear dictate the appropriate values of θ_r and θ_{max}. The major components have several different temperature limits specified in other standards or clauses of this standard as listed in Table 9.

To assure that none of the temperature limitations specified in the other standards or the clauses of this standard as listed in Table 9 are exceeded, the permissible load current based on the actual ambient air temperature is determined by using the values for θ_r and θ_{max} selected as follows:

a) If the actual ambient air temperature is less than 40 °C, the component with the highest specified limit of total temperature should be selected.

b) If the actual ambient air temperature is greater than 40 °C, the component with the lowest specified limit of total temperature should be selected. The use of this value in the calculation will result in an allowable continuous current that will not cause the temperature of any part of the assembly to exceed the specified limit.

NOTE—Information on the load current-carrying capability of power circuit breakers for applications other than in MC switchgear is given in 5.4.3 of IEEE Std C37.010-1999. When the power circuit breaker is used in MC switchgear, all considerations of 5.4.3.2 in IEEE Std C37.010-1999 apply in this standard, except that it should be noted that the exponent 1/2 is used in the formula for determining load current capability rather than 1/(1.8).

Table 9—Switchgear component-temperature limitations

Component	Reference
Circuit breakers	IEEE Std C37.04-1999
Current transformers	IEEE Std C57.13-1993
Insulating material in switchgear assemblies	Table 2
Buses and connections	Table 3
Air surrounding insulated power cables	5.5.5
Parts subject to contact by personnel	5.5.6[a]

[a]In applying switchgear at higher than the standard 40 °C maximum temperature, the limitations of this subclause may be exceeded.

Table 10 lists the calculated values of I_a/I_r for each specified temperature limit for the various components of MC switchgear over a range of typical ambient air temperatures. The allowable current in any given situation can be estimated from Table 10 or may be calculated directly from the stated formula.

8.4.1.1 Short-time load current capability

The considerations of ambient air temperatures in 8.4.1 are based on steady-state conditions. When the switchgear assembly has been operating at current levels below the allowable continuous current I_a, it is possible to increase the load current for a short period to a value greater than the allowable current I_a without exceeding the permissible temperature limits. The length of time that the short-time load current I_s can be carried depends on the following factors:

a) The magnitude of I_s to be carried

--`,,```,,,-`-`,,`,,`,`,,`---
Copyright © 2000 IEEE. All rights reserved.

Copyright The Institute of Electrical and Electronics Engineers, Inc.
Provided by IHS under license with IEEE
No reproduction or networking permitted without license from IHS
Not for Resale

Table 10—Ratios of (I_a/I_r) for various ambient temperatures

Maximum ambient, °C	Limiting temperature of different switchgear components								
	θ_{max}	50	65	70	85	90	105	110	125
	θ_r	10	25	30	45	50	65	70	85
60[a]	—	—	0.45	0.58	0.75	0.77	0.83	0.85	0.87
50[a]	—	—	0.77	0.82	0.88	0.89	0.92	0.93	0.94
40	—	1.00	1.00	1.00	1.00	1.00	1.00	1.00	1.00
30[b]	—	1.41	1.18	1.15	1.11	1.10	1.07	1.07	1.06
25[b]	—	1.58	1.26	1.22	1.15	1.14	1.11	1.10	1.08
20[b]	—	1.73	1.34	1.29	1.20	1.18	1.14	1.13	1.11
10[b]	—	2.0	1.48	1.41	1.29	1.26	1.21	1.20	1.16
0[b]	—	2.0[c]	1.61	1.53	1.37	1.34	1.27	1.25	1.21
–10[b]	—	2.0[c]	1.73	1.63	1.45	1.41	1.33	1.31	1.26
–20[b]	—	2.0[c]	1.84	1.73	1.53	1.48	1.39	1.36	1.31
–30[b]	—	2.0[c]	1.95	1.83	1.60	1.55	1.44	1.41	1.35

[a]For limiting current, use lowest θ_r and θ_{max}.
[b]For limiting current, use highest θ_r and θ_{max}.
[c]Designated limit—not calculated.

b) The magnitude of initial current I_i carried before the application of I_s

c) The thermal-time characteristics of the switchgear assembly

The duration of the short-time current may be calculated directly or may be obtained by simply using Figure 2. The time duration of the current I_s determined in this manner will not cause the total temperature limits of any component of the switchgear assembly to be exceeded provided that the following requirements are fulfilled:

— All main and feeder bus joints and power terminal connections are checked periodically in accordance with the manufacturer's instructions. Bolted connections should be torqued to recommended values.

— The value used for the initial current I_i is the maximum current carried by the main bus or circuit breaker during the 4 h period immediately preceding the application of short-time load I_s.

— At the end of the time period, the current I_s is reduced to a value that is no greater than the allowable continuous load current I_a.

— The value of the current I_s is limited to a maximum value of two times rated continuous current I_r .

Copyright © 2000 IEEE. All rights reserved.
Copyright The Institute of Electrical and Electronics Engineers, Inc.
Provided by IHS under license with IEEE
No reproduction or networking permitted without license from IHS
Not for Resale

8.4.1.2 Determination of allowable time for short-time load current

One method of determining the allowable duration of current I_a is shown in Figure 2. The values of time obtained from Figure 2 are given in time-constant units. The actual time is determined by multiplying the time-constant units by the proper thermal time constant listed in Table 11.

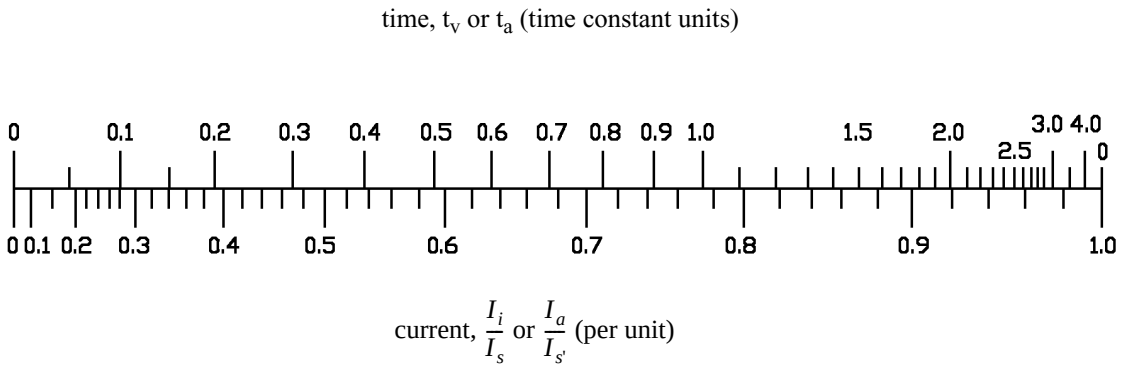

Required initial data:

I_i is the initial steady-state current.

I_a is the allowable continuous load current based on actual ambient temperature (from 8.4.1).

I_s is the desired short-time load current.

Calculation procedure:

Determine I_i / I_s, per unit initial current.

From the figure, determine corresponding time, t_i.

Determine I_a / I_s per unit allowable continuous current.

From the figure, determine corresponding time t_a.

Calculate $t_a - t_i$ = time (in time constant units) that main bus, circuit breaker or interrupter switch, or both can carry I_s, starting from initial continuous current of I_i, with ambient air temperature permitting continuous operation at I_a.

NOTE—This procedure and the design of this figure are based on the following assumptions:

— At the constant current, the temperature approaches its steady-state value at an exponential rate. During any time interval equal to the thermal time constant of the main bus, circuit breaker, or interrupter switch, the temperature rise will be equal to 63.2% of the remaining increment of possible increase existing at the start of the period. This is represented by the time scale at the top of the chart.

— The temperature of the main bus, circuit breaker, or interrupter switch, increases as the 2.0 power of the current increases. This is represented by the current scale at the bottom of the figure. Here, the current in per unit value is plotted to a scale representing the temperature produced by that current.

Figure 2—Current time relationship to determine short-time load current-carrying capability of metal-clad switchgear assemblies

Copyright © 2000 IEEE. All rights reserved.

Copyright The Institute of Electrical and Electronics Engineers, Inc.
Provided by IHS under license with IEEE
No reproduction or networking permitted without license from IHS
Not for Resale

Table 11—Typical thermal time constants for MC switchgear

Circuit breakers and bus rating (A)	Heating time constant (h)
1200	0.5
2000	0.5
3000	0.5

8.4.1.3 Determination of allowable time for I_s by direct calculation

The allowable duration of current I_s may be calculated directly. While the chart method is quicker and simpler than hand calculation of these equations, the increasing availability of digital computers makes it desirable to provide the details of these calculations. These equations may be written in a computer language such as FORTRAN so that many sets of conditions may be analyzed quickly. The program also should then be immediately available for use. The following are the equations used to calculate the time duration t_s for a short-time load current I_s:

$$t_s = -\tau \ln\left\{1 - \frac{\theta_{max} - Y - \theta_a}{Y[(I_s/I_i)^{2.0} - 1]}\right\}$$

$$Y = (\theta_{max} - 40)(I_i/I_r)^{2.0}$$

where

θ_{max} is the allowable hottest spot total temperature from Table 2, Table 3, and Table 4, °C.
θ_a is the actual ambient expected (between –30 °C and 60 °C), °C.
I_i is the initial current carried before the application of I_s (A) (the maximum current carried by the breaker during the 4 h period immediately preceding the application of current I_s),
I_s is the short-time load current (A),
I_r is the rated current (A),
τ is the thermal time constant of the circuit breaker from Table 11 (h),
t_s is the permissible time for carrying current I_s at ambient θ_a after initial current I_i; time is in same units of hours as τ.

NOTE—These equations are derived in the following manner:

Let

θ_s = total temperature, °C, that would be reached if current I_s were applied continuously at ambient θ_a

θ_i = total temperature, °C, due to continuous current I_i at ambient θ_a

θ_t = total temperature, °C, at some time, *t*, after current is raised from I_i to I_s

Then,

$$\theta_t = (\theta_s - \theta_i)(1 - \varepsilon^{-t_s/\tau}) + \theta_i$$

Copyright © 2000 IEEE. All rights reserved.
Copyright The Institute of Electrical and Electronics Engineers, Inc.
Provided by IHS under license with IEEE
No reproduction or networking permitted without license from IHS
Not for Resale

Let

$$\theta_t = \theta_{max}$$

Then

$$t_s = -\tau \ln\left[1 - \frac{(\theta_{max} - \theta_i)}{(\theta_s - \theta_i)}\right]$$

where

$$\theta_i = (\theta_{max} - 40°C)(I_i / I_r)^{2.0} + \theta_a$$

$$\theta_s = (\theta_{max} - 40°C)(I_s / I_r)^{2.0} + \theta_a$$

For the special case where the initial current is zero, the equations in this form are useful. By substitution, the equations given above in terms of Y are obtained; these are convenient to use in the more usual case where the initial current is not zero.

8.4.2 Load current-carrying capability of MC switchgear

For MC switchgear, which may include one or more compartments in a single vertical section, the following guidelines are recommended for estimating the allowable cumulative loading.

8.4.2.1 Determination of main bus load current-carrying capability

The ampacity for the main bus is usually a function of the main circuit breaker frame size or the current output of the supply transformer. The ampacity of the main bus is based on the temperature limitations as described in 5.5.

8.4.2.2 Determination of vertical section load current-carrying capability

The load current-carrying capability of a vertical section consisting of one or two circuit breakers should be determined by the lesser of the following two considerations:

a) The main bus continuous current rating

b) The allowable cumulative circuit breaker loading

8.4.2.3 The cumulative circuit breaker loading

The actual cumulative load should be checked against Table 12. These configurations provide optimum thermal distribution in a vertical section. If other configurations are required, it is recommended that the manufacturer be consulted.

The cumulative circuit breaker loading is the total current that all circuit breakers within a vertical section can carry simultaneously and with the main bus carrying a current equal to its continuous current rating without exceeding the temperature limits in 5.5. Allowable cumulative circuit breaker loading is given in Table 12.

Copyright © 2000 IEEE. All rights reserved.

Copyright The Institute of Electrical and Electronics Engineers, Inc.
Provided by IHS under license with IEEE
No reproduction or networking permitted without license from IHS
Not for Resale

Table 12—Allowable cumulative loads

Circuit breaker continuous current rating (A)	Number of circuit breakers carrying load	Allowable cumulative load (A)[a]
1200	1	1200
1200	2	2000
2000	1	2000
2000	2	3200[b]
1200 & 2000	2	2500
3000	1	3000

[a]Without forced ventilation.
[b]3200 A is a nonstandard rating (3000 A is preferred).

NOTES

1—If equal percentage reduction in each circuit breaker (as a percentage of rating) is not practical, the higher percentage load should be connected to the circuit breaker in the lower compartment. The manufacturer should be consulted if other arrangements are required.

2—In the absence of data from the manufacturer for a specific switchgear configuration, it is recommended that the values for allowable cumulative loading given in Table 12 not be exceeded for indoor ambient of 40 °C.

8.4.3 Special continuous current ratings

If an unusual situation requires consideration of a rating not included in the preferred rating structure or is not possible utilizing ambient compensation, consideration should be given to

a) Design modifications for increased current capacity of the primary circuit by means of larger conductor sizes or the use of higher conductivity materials.

b) Forced-air cooling utilizing automatic controls so that the forced cooling for increased rating is operational only when actually required. The air supply for forced cooling should be clean and dry.

8.4.4 Conductor temperature

Cables connected to MC switchgear should be capable of withstanding the 65 °C ambient temperature to which they may be subjected.

8.4.5 Conductor terminations

Consideration should be given to the use of suitable connectors that are designed for use with the outgoing conductor and terminals in the switchgear units.

8.4.6 Control supply terminations

When long connections to the control battery are necessary, the cable should be large enough to prevent excessive voltage drop.

NOTE—Larger terminal blocks than are specified in 7.3.5 may be required for this termination.

Copyright © 2000 IEEE. All rights reserved.
Copyright The Institute of Electrical and Electronics Engineers, Inc.
Provided by IHS under license with IEEE
No reproduction or networking permitted without license from IHS
Not for Resale

8.5 Short-circuit considerations

MC switchgear should have short-circuit capability (momentary withstand and short-time withstand or both) equal to or greater than the short-circuit capability of the system on which it is applied.

8.6 Nuclear power plant application

When MC switchgear is applied in nuclear power generating stations, particularly when it is applied as Class 1E equipment, it should meet the requirements of pertinent standards that have been developed for such applications.

8.7 Associated devices often used in MC switchgear

8.7.1 Current transformers

The current transformers included in MC switchgear are in accordance with 5.5, 5.6, and 5.7. The accuracies listed in Table 4 are the standard supplied in the usual design of this equipment, and are adequate for most applications. If an application requires higher accuracies, it should be specified by the user. It should be recognized that wound-type current transformers with higher accuracies than those listed in Table 4 may not meet the requirements of 5.6. The manufacturer should be consulted for possible solutions to the problem of obtaining required accuracy without compromising on other requirements.

Proper selection of current transformers is imperative for proper operation and protection of MC switchgear. The following information should be considered in the selection process:

a) Circuit load current

b) Continuous current (thermal) rating factor

c) Mechanical and short-time (thermal) current rating

d) Accuracy class

e) Secondary burden

f) Type of protection (single circuit overcurrent or differential)

g) Available short-circuit current

When the current transformer ratio is selected primarily to meet the full load and overload protection requirements of the protected load, the ratio and accuracy may be too low to ensure proper operation of the short-circuit protection at the maximum available fault current. Improper protective relay operation resulting from current transformer saturation may cause misoperation or nonoperation of the circuit breaker. The following items should be considered:

— Special accuracy current transformer supplied by the manufacturer

— Use of two sets of current transformers—a low ratio set determined by the rated full load current and overload protection requirements, and a much higher ratio/accuracy class combination set dictated by the available short-circuit current levels and the current transformer secondary burden

The problems and related solutions of applying low-ratio current transformers in high-fault current circuits have been documented in IEEE Std C37.110-1996, in “Transient Response of Current Transformers” [B2], and in “Relay Performance Considerations with Low Ratio CT’s and High Fault Currents” [B3].

Copyright © 2000 IEEE. All rights reserved.

Copyright The Institute of Electrical and Electronics Engineers, Inc.
Provided by IHS under license with IEEE
No reproduction or networking permitted without license from IHS
Not for Resale

8.7.2 Surge protective devices

8.7.2.1 Rotating equipment

Capacitors or surge arresters, or both, used to protect the insulation of rotating machines should be housed in a suitable enclosure adjacent to the machine and connected without fuses or disconnecting devices. Cable connections to these devices should be able to withstand short-circuit current both thermally and mechanically.

8.7.2.2 Exposed circuits

Protection against voltage surges should be considered for all switchgear assemblies that have exposed circuits. Exposed circuits are those outside buildings or those that do not have adequate surge protection connected to limit voltages to less than the withstand level of the switchgear.

8.7.2.3 Surge arresters in switchgear assemblies

Surge arresters used in switchgear assemblies should have adequate discharge capability and be voltage-limiting to keep voltage surges below the insulation level of the protected equipment. Special consideration should be given to the use of coordinated surge arresters for MC switchgear installed at high altitudes.

8.7.2.4 Surge capacitors for fast transient recovery voltage (FTRV) circuits

Certain applications, such as circuits utilizing current limiting reactors or where a main circuit breaker is close-coupled to a power transformer, are subject to faster than normal transient recovery voltages (FTRV), which can be up to 20 times faster than the rated values. Certain types of circuit breakers cannot successfully interrupt intermediate short-circuit currents under these conditions. Surge capacitors may need to be installed in the switchgear assembly between the circuit breaker and the inductance to dampen the high rate of rise of recovery voltage. The manufacturer should be consulted for the correct application based on ANSI C37.06.1-1997.

8.8 Protection and isolation of switchgear connected to other circuit protective equipment

When MC switchgear is electrically connected to other power switching and circuit protective equipment, the circuit protective equipment should be provided in the connection between the two so that a fault in one assembly will not result in damage to the other assembly.

NOTE—Where both assemblies supply power to an entire integral unit process so that the shutdown of one part necessitates the shutdown of the entire process, tie circuit protection equipment is not required. For additional information and further study of switching arrangements, see IEEE Std 141-1993, IEEE Std 241-1990, IEEE Std 242-1986, and IEEE Std 446-1995.

--`,,```,,,,`-`-`,,`,,`,`,,`---
Copyright © 2000 IEEE. All rights reserved.
Copyright The Institute of Electrical and Electronics Engineers, Inc.
Provided by IHS under license with IEEE
No reproduction or networking permitted without license from IHS
Not for Resale

9. Guide for handling, storage, and installation

9.1 General

This subclause is a guide for the handling, storage, and installation of MC switchgear and emphasizes safety aspects and other considerations in working with this type of equipment. It supplements, but does not replace, the manufacturer's detailed instructions on these subjects. The objective is to furnish additional guidelines to promote and enhance a reliable installation.

The manufacturers of MC switchgear include instruction books and drawings with their equipment that contain detailed recommendations for storage, handling, installation, operation, and maintenance.

Personnel responsible for these functions should review these recommendations before handling the equipment. Particular attention should be given to recommendations for the preparation of the foundation and forms on which the switchgear is to be mounted. One set of manufacturer's instruction books should remain with the MC switchgear when in storage or at the installation site.

9.2 Handling

9.2.1 Receiving

MC switchgear should be carefully inspected and packed before leaving the factory. Immediately upon receipt, the equipment should be examined for damage that may have been sustained during transit. If damage is evident or indications of rough handling are visible, the carrier (transportation company) and the manufacturer should be notified promptly.

Only authorized personnel should be permitted to handle the equipment. Care should be exercised in handling each piece of equipment (even if crated) because parts may be damaged.

9.2.2 Rigging

Instructions for lifting and handling of the equipment are contained in the manufacturer's instruction books and drawings. The rigging should be adequate for the size and weight of the equipment.

9.2.3 Storage

Indoor switchgear that cannot be installed immediately should be stored in a dry, clean location and should remain in crates during the storage period. The longer the period of storage, the greater the care required for protection of the equipment. During storage, the MC switchgear should be placed on a level surface to prevent unnecessary strain and possible distortion. During the construction period, protection should be provided against dust, dirt, falling objects, dripping water, excessive water, excessive moisture, and other possible causes of damage to the equipment. Any temporary covering should not restrict ventilation and should not be removed until the equipment is ready for installation. It is preferable to store indoor equipment in a heated building. If this is not possible, special precautions should be taken to keep the equipment sufficiently warm with adequate ventilation to prevent condensation during the storage period. If necessary, temporary heating should be installed in the equipment.

If outdoor switchgear cannot be installed and energized, temporary power must be provided for the operation of the space heaters provided so as to minimize condensation of moisture within the housing.

Copyright © 2000 IEEE. All rights reserved.

Copyright The Institute of Electrical and Electronics Engineers, Inc.
Provided by IHS under license with IEEE
No reproduction or networking permitted without license from IHS
Not for Resale

CAUTION: Ensure that the normal supply source is open to prevent feedback.

Ventilation openings in MC switchgear should be left open to permit proper circulation of air.

9.2.4 Installation

When installing MC switchgear,

a) Protect workers adequately from live parts with barriers, screens, etc.

b) National Electrical Safety Code® (NESC®) (Accredited Standards Committee C2-1997), Part 1, Rule 124, for guarding live parts should be observed.

9.2.5 Removal of shipping members

After the MC switchgear is installed at a permanent location, a careful check should be made to ensure that all members included for shipping purposes have been removed.

9.2.6 Connections

9.2.6.1 Bus connections

When the MC switchgear consists of several shipping sections, the main bus is necessarily disconnected before shipping. The main bus should be reconnected, with particular attention paid to the cleanliness of and pressure between the contact surfaces. It is essential that the connections be securely bolted because the conductivity of the joints is dependent on the applied pressure. Refer to the manufacturer's torque recommendations and any other special instructions.

9.2.6.2 Cable connections

Before the cable connections are made, the phasing of each cable should be determined in accordance with the connection diagram, and the cables should be tagged accordingly. The cable manufacturer's instructions should be followed in forming cable terminations and during the installation of the cable. It is essential that the connections be clean and torqued to manufacturer's recommendations since the conductivity of the joints is proportional to the applied pressure. The terminating devices (where required) should be installed pursuant to the terminator manufacturer's instructions.

9.2.6.3 Control connections

Control wires between shipping sections should be reconnected as marked by the manufacturer. Connections that are to be connected to terminals in apparatuses remote from the switchgear should be checked carefully against the connection diagram. In making connections to terminals, care should be exercised to ensure that the connections are made properly.

9.2.6.4 Grounding

Sections of ground bus previously disconnected at shipping sections must be reconnected when the units are installed. It should be ensured that all secondary wiring is connected to the switchgear ground bus as indicated on the drawings. The ground bus should be connected to the system ground with as direct a

--`,,```,,,,`-`-`,,`,,`,`,,`---
Copyright © 2000 IEEE. All rights reserved.
Copyright The Institute of Electrical and Electronics Engineers, Inc.
Provided by IHS under license with IEEE
No reproduction or networking permitted without license from IHS
Not for Resale

connection as possible and should not be run in metal conduit unless the conduit is adequately bonded to the circuit. The grounding conductor should be capable of carrying the maximum line-to-ground short-circuit current for the duration of a fault. A reliable ground connection is necessary for every switchgear installation. It should be of sufficient capacity to handle any abnormal condition that might occur in the system and should be independent of the grounds used for other apparatuses. A permanent low-resistance ground is essential for adequate protection and safety.

9.3 Preoperation check

Care must be exercised to prevent the MC switchgear from being energized from the power system while preliminary tests are being conducted. If disconnecting means is not available, line leads should be disconnected. All internal connections should be examined to ensure that they have not been loosened or damaged during shipment or installation, and all bolted connections and joints should be tightened to ensure good contact. If spring washers are used under bolt heads and nuts, they should be tightened in accordance with manufacturer's instructions. All wiring connections should be checked for tightness, including those at the instrument transformers and all terminal blocks. Current transformer shorting devices on all active circuits should be removed.

All ties and blocking for the relay armatures or discs should be removed before the control energy is applied.

Protective relays, overcurrent trip devices, and breaker attachments included with the MC switchgear should be tested for correct connections and operation at the factory. However, the protective device settings for current, voltage, or other quantities must be made by the user in accordance with his operating practices. The manufacturer's instruction books should be studied carefully before setting the protective devices.

It is recommended that the integrity of control buses be checked with an ohmmeter to ensure against short circuits in the control wiring. Control wiring should be given a dielectric test or be insulation resistance tested and power circuits, such as buses and circuit breakers, should be given a power-frequency withstand test as described in 6.5. After MC switchgear has been installed and all interconnections completed, all control schemes should be functionally tested and power connections given a final check for phase rotation/sequence before the switchgear is finally energized for service.

9.4 Removable elements

All circuit breakers should be inspected for damaged parts and any loose connections pursuant to the manufacturer's instructions. A check should be made of the manual operation with the manual closing lever or with the maintenance closing handle on the larger size circuit breaker elements. Each circuit breaker should be tripped by operating the manual trip device. Operation with maintenance handle and slow closing should be done outside the circuit breaker cubicle. The power-operated circuit breakers should be checked for proper operation while in the switchgear cubicle test position, for both closing and tripping at the normal control voltage.

9.5 Interlocks

Interlocks should be checked for proper operation before power is applied to the switchgear.

Interlocks should be checked between removable element and housing to see that

Copyright © 2000 IEEE. All rights reserved.

Copyright The Institute of Electrical and Electronics Engineers, Inc.
Provided by IHS under license with IEEE
No reproduction or networking permitted without license from IHS
Not for Resale

a) The element cannot be moved to or from the connected position when the breaker is in the closed position.

b) The circuit breaker cannot be closed unless it is in the fully connected position or in the test position.

The shutters should be checked to make sure they are operable so that the primary disconnecting devices in the housing are automatically covered when the circuit breaker is withdrawn.

9.6 Energizing

After the removable circuit breaker elements and interlocks have been tested satisfactorily and final field dielectric tests in accordance with 6.5 are satisfactorily completed, the circuit breakers may be moved to the connected position. Each compartment door should be closed and secured before the circuit is energized.

Copyright © 2000 IEEE. All rights reserved.
Copyright The Institute of Electrical and Electronics Engineers, Inc.
Provided by IHS under license with IEEE
No reproduction or networking permitted without license from IHS
Not for Resale

Annex A

(informative)

Guide for enclosure categories and related requirements

IEEE Std C37.20-1969 (Reaff 1981) (1974 consolidated edition) had included Clause 7 entitled "Tamperproof switchgear." However, this terminology created questions of intent with relation to public exposure, and therefore, IEEE Std C37.20.2-1987 eliminated this construction feature from the basic standard.

During the development of other standards, an enclosure security section was developed to provide guidance for varying types of construction described as categories A, B, and C. These categories are included in ANSI C37.55-1989, but basic construction features normally are not included in a conformance test standard.

Construction details normally are included in the basic standards. However, since category A covers the prior concept of tamper-proof, it was decided that it would be best contained in this annex, with the other categories to be utilized as optional. Category C covers metal-clad switchgear with exposed bushings, bus, or terminals.

Category B, while it represents basic metal-clad switchgear construction, remains in this annex for continuity.

It is noted that ANSI C37.55-1989 requires conformance testing as applicable for category A, B, or C.

A.1 Scope

This guide covers enclosure categories and related requirements.

A.2 Enclosure categories

Switchgear assemblies are installed in a variety of locations that have different degrees of exposure to the general public. The enclosure of the switchgear assembly provides a degree of protection to the enclosed conductors or equipment and provides a degree of protection to personnel against incidental contact with live parts.

Enclosures are categorized as category A, B, or C as listed in Table A.1.

A.2.1 Category A enclosures

Category A enclosures are intended to provide a degree of protection against contact with enclosed equipment in ground level installations subject to deliberate unauthorized acts by members of the unsupervised general public. The enclosure should meet the requirements of category A in Table A.1.

Copyright © 2000 IEEE. All rights reserved.

Copyright The Institute of Electrical and Electronics Engineers, Inc.
Provided by IHS under license with IEEE
No reproduction or networking permitted without license from IHS
Not for Resale

A.2.2 Category B enclosures

Category B enclosures are intended for use in installations not subject to deliberate unauthorized acts by members of the unsupervised general public and primarily to provide a degree of protection to unauthorized and untrained personnel against incidental contact with enclosed equipment. The enclosures should meet the requirements of category B in Table A.1.

A.2.3 Category C enclosures

Category C enclosures are intended to provide a degree of protection against contact with enclosed equipment in secured installations intended to be accessible only to authorized qualified persons. The enclosures should meet the requirements of category C in Table A.1.

A.3 Enclosure requirements

The enclosure requirements shall be as follows:

a) *Enclosure construction.* Enclosures should be of metal suitably supported, constructed, and assembled so that the enclosure will have the strength and rigidity necessary to meet the requirements of this standard.

b) *Enclosure finishes.* Unless the enclosure is made of a material that will resist corrosion, both inside and outside surfaces should be finished in accordance with 7.5.2. The MC switchgear must withstand the applicable coating qualification test (see 6.2.9).

c) *Enclosure material*. The thickness of a sheetmetal enclosure should not be less than that indicated in Table A.2. If metals other than steel are used, the thickness should be such that equivalent strength and deflection are provided.

d) *Supporting structures*. A supporting structure should be formed of angles, channels, folded rigid sections of sheet metal, or the equivalent, and should be rigidly fastened together and have essentially the same outside dimensions as the enclosure surfaces.

e) *Supporting structures and frames.* With reference to item d) and Table A.2, a construction is not considered to have a supporting frame if it is

   1) A single sheet with single formed flanges (formed edges)
   2) A single sheet that is die formed (corrugated or ribbed)
   3) An enclosure surface loosely attached to a frame, i.e., with spring clips

A.3.1 Equivalent construction

A.3.1.1 Unsupported areas

The unsupported area of an enclosure may be greater than is shown in Table A.2 if the enclosure is reinforced so that it meets the requirements of A.3.1.2 and A.3.1.3.

Copyright © 2000 IEEE. All rights reserved.
Copyright The Institute of Electrical and Electronics Engineers, Inc.
Provided by IHS under license with IEEE
No reproduction or networking permitted without license from IHS
Not for Resale

Table A.1—Requirements for enclosure categories

Feature	Reference subclauses	Required for categories		
All enclosures basic requirements		**A**	**B**	**C**
Rigidity (sheet metal)	A.3.1	Yes	Yes	Yes
Doors (if supplied)	A.3.2	Yes	Yes	Yes
Doors—handles lockable	A.3.2	Yes	Yes	No
Doors—captive fasteners permitted	A.3.2	N/A[a]	Yes	Yes
Hinge pins—non-removable door	A.3.2	Yes	No	No
Vent openings (permissible)	A.3.3	Yes	Yes	N/A[a]
Operating handle protection	A.3.4	Yes	No	No
Operating handles—guards	A.3.5	Yes	Yes	Yes
Viewing pane—lockable cover	A.3.6	Yes	No	No
Drain valves, gauges, etc. (Locked cover)	A.3.7	Yes	No	No
Exposed live parts permissible	A.3.9	No	No	No
External markings	A.3.10	Yes	Yes	Yes
Outdoor enclosures				
Material	A.3.8	Yes	Yes	Yes
Hinges	A.3.8	Yes	Yes	Yes
Gaskets	A.3.8	Yes	Yes	Yes
Doorstop	A.3.8	Yes	Yes	Yes
Drainage	A.3.8	Yes	Yes	Yes
Design tests	A.3.8	Yes	Yes	Yes

[a]N/A = Not applicable

A.3.1.2 Deflection test

The following test is to be applied to the front, end, side, and rear walls of each enclosure:

The inward deflection when a force of 445 N (100 lbf) is applied perpendicular to the surface of any point on the enclosure through a rod with a 13 mm × 13 mm (0.5 in × 0.5 in) face will not impair the dielectric criteria of 5.2.2 or affect mechanical performance. For the test, the enclosure may be laid on its back on a smooth, solid horizontal surface with the door closed and the front panel or cover secured as intended. The test force should be applied at various points on the enclosure likely to cause deflection. The same sample may be used for more than one test provided that no permanent deflection was caused by a previous test.

Copyright © 2000 IEEE. All rights reserved.

Copyright The Institute of Electrical and Electronics Engineers, Inc.
Provided by IHS under license with IEEE
No reproduction or networking permitted without license from IHS
Not for Resale

Table A.2—Minimum thickness of sheet metal for carbon steel or stainless steel enclosures

Without supporting frame[a]				With supporting frame or equivalent reinforcing[b]				Minimum thickness (MSG)
Maximum width[b]		Maximum length[c]		Maximum width[b]		Maximum length[c]		Uncoated
in	cm	in	cm	in	cm	in	cm	
33	84	Not limited	—	51	130	Not limited	—	14
38	97	47	119	54	137	66	167	14
42	107	Not limited	—	64	163	Not limited	—	13
47	119	59	150	68	173	84	213	13
52	132	Not limited	—	80	203	Not limited	—	12
60	152	74	188	84	213	103	261	12
63	160	Not limited	—	97	246	Not limited	—	11
73	185	90	229	103	262	127	322	11

[a]See item e) of A.3.
[b]The width is the smaller dimension of a rectangular sheet metal piece that is part of an enclosure. Adjacent surfaces of an enclosure may have supports in common and be made from a single sheet.
[c]For panels that are not supported along one side (e.g., side panels of boxes) the length of the unsupported side should be limited to the dimensions specified.

A.3.1.3 Torsion test

With each enclosure in a vertical position, the base is to be secured to a rigid surface. The top corners are then to be twisted around the vertical axis of the enclosure by the application of 890 N (200 lbf) to the corner that results in the greatest torsional deflection. With this torsional force applied, the dielectric capability should not be impaired and mechanical performance should not be adversely affected.

A.3.2 Access doors and covers

A part of the enclosure, such as a door, cover, or tank, should be provided with a means (such as latches, locks, interlocks, or captive fasteners) for firmly securing it in place. Such fasteners should be located or used in multiple to hold the door or cover closed over its entire length. A hinged cover more than 1.2 m (48 in) long on the hinged side should have at least a two-point latch, or have at least two captive fasteners.

The opening handles for doors on equipment for category A should be lockable. Captive fasteners are permitted on category B equipment. Exposed hinge pins should be nonremovable on doors of category A equipment, or, as an alternative, the door should be nonremovable in the closed position.

Copyright © 2000 IEEE. All rights reserved.
Copyright The Institute of Electrical and Electronics Engineers, Inc.
Provided by IHS under license with IEEE
No reproduction or networking permitted without license from IHS
Not for Resale

A.3.3 Enclosure and ventilation openings

A.3.3.1 Enclosure openings

When the enclosure is completely and properly installed, openings in the enclosure, other than ventilation openings, should prevent the entrance of a rod with a diameter of 3.2 mm (0.125 in), except that if the distance between the opening and the nearest not fully insulated live part is greater than indicated in Table A.3, the opening may permit the entry of a rod with a diameter greater than 3.2 mm (0.125 in), but not greater than 13 mm (0.5 in).

A barrier or equivalent should be located so that it obstructs the line-of-sight of all live parts through the opening that is protected.

A.3.3.2 Ventilation openings

Ventilation openings should prevent the entrance of a rod with a diameter of 13 mm (0.5 in), except that if the distance from the opening and the nearest not fully insulated live part is greater than indicated in Table A.3, the opening may permit the entry of a rod with a diameter greater than 13 mm (0.5 in) but not greater than 19 mm (0.75 in).

A barrier or equivalent should be located so that it intercepts all live parts from line of sight through the opening that is protected.

EXCEPTION—A larger opening above the upper edge of the enclosure, but under the overhang of the top, is acceptable if by means of its size, baffling, etc., it will prevent a straight rod 13 mm (0.5 in) in diameter from approaching any uninsulated live parts inside the enclosure by a distance not less than indicated in Table A.3.

Table A.3—Clearance to ventilation openings

Rated maximum voltage kV	Clearance	
	in	cm
4.76	5.5	14
8.25	6.5	17
15.0	8.0	20
27.0	12.0	30
38.0	15.0	36

The diameter of the wires of a screen should not be less than 1.3 mm (0.051 in) if the screen openings are 320 mm^2 (0.5 in^2) or less in area, and should not be less than 2.1 mm (0.081 in) for larger screen openings.

Perforated sheet steel and sheet steel employed for expanded metal mesh should not be less than 1.1 mm (0.042 in) thick for mesh openings or perforations 320 mm^2 (0.5 in^2) or less in area and should not be less than 2.1 mm (0.081 in) thick for larger mesh openings or perforations.

Copyright © 2000 IEEE. All rights reserved.

Copyright The Institute of Electrical and Electronics Engineers, Inc.
Provided by IHS under license with IEEE
No reproduction or networking permitted without license from IHS
Not for Resale

A ventilating opening in the top of the enclosure should prevent the entry of falling dirt.

A.3.3.3 Rod entry tests

Rod entry tests should be made by attempting to insert the end portion of straight rods of diameters specified in A.3.3.1 and A.3.3.2 into the equivalent cavities of the enclosure.

A.3.3.4 Evaluation

The enclosure is considered to have met the requirement of these tests if the rod has not entered the enclosure or is restricted by a barrier from intrusion into the enclosure interior.

A.3.4 Operating handle protection

Device-operating handles on the external surface of MC switchgear enclosures should be lockable or provided with lockable covers for category A equipment.

A.3.5 Operating handles

If the mechanism of a switching device is such that the operation of a remote or automatic tripping device will result in sudden movement of an operating handle, the motion of the handle should be restricted or the handle should be guarded to prevent injury to persons in the vicinity of the handle.

A.3.6 Viewing panes

A transparent material covering an observation opening and forming a part of the enclosure should be reliably secured in such a manner that it cannot be readily displaced in service and should meet the following requirements:

a) Viewing panes should not shatter, crack, or become dislodged when both sides of the viewing panes in turn are subjected to the tests described below.

b) A force of 445 N (100 lbf) should be exerted perpendicular to the surface in which the viewing pane is mounted. This force should be distributed evenly over an area of 0.010 m^2 (16 in^2) (as nearly square as possible and as near the geometric center of the viewing pane as possible). If the viewing pane has an area less than 0.010 m^2 (16 in^2), the force should be evenly distributed over the entire viewing area. The 445 N (100 lbf) should be sustained for a period of 1 min.

c) The viewing pane should be subjected to an impact of 3.4 J (2.5 ft-lbf) using a steel ball weighing approximately 0.54 kg (1.18 lb) and measuring approximately 50 mm (2 in) in diameter.

d) Separate samples may be used for each of the tests described in a), b), and c).

e) If a viewing pane is intended to be exposed to insulating oil in a tank or compartment, it should be made of a material that is resistant to the corrosive effects of the insulating oil.

f) Category A equipment should have lockable covers over viewing panes if viewing panes are furnished.

A.3.7 Accessories

Drain valves, gauges, etc., should have a lockable cover on enclosures designated as category A.

Copyright © 2000 IEEE. All rights reserved.
Copyright The Institute of Electrical and Electronics Engineers, Inc.
Provided by IHS under license with IEEE
No reproduction or networking permitted without license from IHS
Not for Resale

A.3.8 Outdoor enclosure requirements

A.3.8.1 General

These enclosures are intended for outdoor use primarily to provide a degree of protection against rain and sleet. They should meet rain tests and paint qualification design tests.

Hinges and other attachments should be resistant to corrosion. Metals should not be used in combinations that result in galvanic action that adversely affects any part of the device.

If an outdoor enclosure has any opening for the passage of a wire or bus bar to a switchboard section or a wireway, auxiliary gutter, or busway, a suitable gasket or other means should be provided that will prevent the entrance of water at such opening. If the opening is for the attachment of a busway, the outdoor enclosure and the busway are to be investigated together to determine that water does not enter along the bus bars.

A.3.8.2 Test requirements

Outdoor enclosures should be tested and evaluated by

a) Rain test per 6.2.10

b) Coating qualification test per 6.2.9

A.3.8.3 Gasketing

An outdoor enclosure construction requiring a gasketed joint should meet the following requirements:

a) A gasket of rubber or neoprene, or a composition thereof, is to be exposed for 96 h to oxygen at a pressure of 2.1×10^6 kPa (300 lbf/in^2) and a temperature of 70 °C. The gasket is considered adequately resistant to aging if there is no visible evidence of deterioration such as softening, hardening, or cracking after flexing.

b) A gasket of thermoplastic material, or a composition thereof, may be accepted after consideration of the effects of heat aging, distortion under conditions of use, and the means of securing the gasket to the cover or enclosure.

A.3.9 Exposed live parts

MC switchgear should have no exposed live conductors (such as entrance bushing studs, terminal connections, or bus bars) unless it is designated as category C equipment.

A.3.10 External marking

An assembly should be marked with its enclosure category.

--`,,`,,,,-`-`,,`,,`,`,,`---
Copyright © 2000 IEEE. All rights reserved.

Copyright The Institute of Electrical and Electronics Engineers, Inc.
Provided by IHS under license with IEEE
No reproduction or networking permitted without license from IHS
Not for Resale

Annex B

(informative)

Bibliography

Only those publications that are referenced and are approved standards can be listed as references in Clause 2 of this standard. Some other publications that provide additional information are listed below.

[B1] The IEEE Standard Dictionary of Electrical and Electronics Terms, Sixth Edition.

[B2] “Transient Response of Current Transformers,” IEEE Transactions, Vol. PAS-96, No. 6, 1977.

[B3] “Relay Performance Considerations With Low Ratio CT’s and High Fault Currents,” IEEE Transactions on Power Systems, Vol 8, No. 3, 1993.

--`,,```,,,-`-`,,`,,`,`,,`---

Copyright © 2000 IEEE. All rights reserved.

Copyright The Institute of Electrical and Electronics Engineers, Inc.
Provided by IHS under license with IEEE
No reproduction or networking permitted without license from IHS

Not for Resale