An American National Standard

IEEE Guide for Synthetic Fault Testing of AC High-Voltage Circuit Breakers Rated on a Symmetrical Current Basis

Sponsor
Switchgear Committee
of the
IEEE Power Engineering Society

Secretariat

Institute of Electrical and Electronics Engineers, Inc
National Electrical Manufacturers Association

Approved September 14, 1978
Reaffirmed June 9, 1988

IEEE Standards Board

Approved December 1, 1980
Reaffirmed October 17, 1988

American National Standards Institute

© Copyright 1981 by

The Institute of Electrical and Electronics Engineers, Inc

345 East 47th Street, New York, NY 10017

No part of this publication may be reproduced in any form, in an electronic retrieval system or otherwise, without the prior written permission of the publisher.

Copyright The Institute of Electrical and Electronics Engineers, Inc.
Provided by IHS under license with IEEE
No reproduction or networking permitted without license from IHS

Not for Resale

IEEE Standards documents are developed within the Technical Committees of the IEEE Societies and the Standards Coordinating Committees of the IEEE Standards Board. Members of the committees serve voluntarily and without compensation. They are not necessarily members of the Institute. The standards developed within IEEE represent a consensus of the broad expertise on the subject within the Institute as well as those activities outside of IEEE which have expressed an interest in participating in the development of the standard.

Use of an IEEE Standard is wholly voluntary. The existence of an IEEE Standard does not imply that there are no other ways to produce, test, measure, purchase, market, or provide other goods and services related to the scope of the IEEE Standard. Furthermore, the viewpoint expressed at the time a standard is approved and issued is subject to change brought about through developments in the state of the art and comments received from users of the standard. Every IEEE Standard is subjected to review at least once every five years for revision or reaffirmation. When a document is more than five years old, and has not been reaffirmed, it is reasonable to conclude that its contents, although still of some value, do not wholly reflect the present state of the art. Users are cautioned to check to determine that they have the latest edition of any IEEE Standard.

Comments for revision of IEEE Standards are welcome from any interested party, regardless of membership affiliation with IEEE. Suggestions for changes in documents should be in the form of a proposed change of text, together with appropriate supporting comments.

Interpretations: Occasionally questions may arise regarding the meaning of portions of standards as they relate to specific applications. When the need for interpretations is brought to the attention of IEEE, the Institute will initiate action to prepare appropriate responses. Since IEEE Standards represent a consensus of all concerned interests, it is important to ensure that any interpretation has also received the concurrence of a balance of interests. For this reason IEEE and the members of its technical committees are not able to provide an instant response to interpretation requests except in those cases where the matter has previously received formal consideration.

Comments on standards and requests for interpretations should be addressed to:

Secretary, IEEE Standards Board
345 East 47th Street
New York, NY 10017
USA

Copyright The Institute of Electrical and Electronics Engineers, Inc.
Provided by IHS under license with IEEE
No reproduction or networking permitted without license from IHS
Not for Resale

Foreword

(This Foreword is not a part of ANSI/IEEE C37.081-1981, IEEE Guide for Synthetic Fault Testing of AC High-Voltage Circuit Breakers Rated on a Symmetrical Current Basis.)

This is a new guide developed to provide a basis for synthetic testing of circuit breakers and to establish the criteria for testing to demonstrate the short circuit rating of circuit breakers.

The guide contains typical circuits for use in demonstrating interrupting capabilities, but these circuits are those in general use and they should not exclude the development or introduction of additional circuits.

The Standards Committee on Power Switchgear, C37, which reviewed and approved this Guide, had the following personnel at the time of approval:

C.L. Wagner, *Chair*
John D. Hopkins, *Secretary*
J.E. Beehler *(Executive Vice-Chairman of High Voltage Switchgear Standards)*
W. E. Laubach *(Executive Vice-Chairman of Low Voltage Switchgear Standards)*
S. H. Telender *(Executive Vice-Chairman of IEC Activities)*

Copyright The Institute of Electrical and Electronics Engineers, Inc.
Provided by IHS under license with IEEE
No reproduction or networking permitted without license from IHS
Not for Resale

Organization Represented	*Name of Representative*
Association of American Railroads	*Vacant*
Association of iron and Steel Engineers	J. M. Tillman
Electric Light and Power Group	K. G. Adgate J. E. Beehler R. L. Capra (*Alt*) H. G. Darron H. F. Frus K. D. Hendrix R. L. Lindsey (*Alt*) E. E. Ramm (*Alt*) F. R. Solis
Institute of Electrical and Electronics Engineers	M. J. Beachy (*Alt*) R. N. Bell (*Alt*) H. H. Fahnoe R. E. Friedrich M. J. Maier C. A. Mathews (*Alt*) D. C. Musgrave (*Alt*) G. W. Walsh H. F. White
National Electrical Manufacturers Association	A. P. Colaiaco R. W. Dunham D. G. Portman G. A. Wilson W. R. Wilson
Tennessee Valley Authority	Robert C. St. Clair
Testing Laboratory Group	L. Frier E. J. Huber R. W. Seelbach (*Alt*)
U.S. Department of the Army	Robert H. Bruck
U.S. Department of the Interior, Bureau of Reclamation	Edward M. Tomsic
U.S. Department of Defense, Defense Communications Agency	*Vacant*
U.S. Department of the Navy, Naval Facilities Engineering Command	D. M. Hannemann

This guide was prepared by the Working Group on Synthetic Testing of the Power Circuit Breaker Subcommittee. At the time this guide was approved the working group had the following membership:

T. F. Garrity, *Chair*

D. M. Benenson	J. G. Reckleff*	H. N. Schneider
R. G. Colclaser	A. Rishworth	E. G. Solorzano
C. F. Cromer	W. N. Rothenbuhler	J. A. Urbanek
C. D. Fahrnkopf	E. Ruoss	E. F. Veverka
J. Porter	G. St. Jean	G. A. Votta

*Chairman at time of publication

Copyright The Institute of Electrical and Electronics Engineers, Inc.
Provided by IHS under license with IEEE
No reproduction or networking permitted without license from IHS
Not for Resale

At the time this guide was approved, the Power Circuit Breaker Subcommittee had the following membership:

G. A. Wilson, *Chair*

H. W. Anderl
J. E. Beechler
D. M. Benenson
L. E. Brothers
R. G. Colclaser
B. G. Coursey
J. C. Coon
C. F. Cromer
C. R. Cusick
A. Dupont
C. J. Dvorak
P. W. Dwyer
J. D. Finley
R. E. Friedrich
T. F. Garrity
J. P. Geraghty
W. F. Giles
K. I. Gray
R. D. Hambrick
G. R. Hanks
W. E. Harper
M. Hudis
W. C. Huening, Jr
P. L. Kolarik
S. R. Lambert
D. M. Larson
G. N. Lester
M. J. Maier
J. A. Maneatis
R. A. McMaster
G. J. Meinders
Z. Neri
I. E. Oliver
R. A. Pace
G. O. Perkins
J. G. Reckleff
A. B. Rishworth
W. N. Rothenbuhler
L. H. Schmidt
H. N. Schneider
G. G. Schockelt
R. D. Settembrini
E. G. Solorzano
T. J. Toybin
C. J. Truax
E. F. Veverka
G. A. Votta
C. L. Wagner
D. R. Webster
W. R. Wilson
B. F. Wirtz
C. E. Zanzie

When the IEEE Standards Board approved this guide on September 14, 1978, it had the following membership:

Joseph L. Koepfinger, *Chair*
Irvin N. Howell, Jr, *Vice Chair*
Ivan G. Easton, *Secretary*

William E. Andrus
C. N. Berglund
Edward J. Cohen
Warren H. Cook
David B. Dobson
R. O. Duncan
Charles W. Flint
Jay Forster
Ralph I. Hauser
Loering M. Johnson
Irving Kolodny
William R. Kruesi
Thomas J. Martin
John E. May
Donald T. Michael
Voss A. Moore
William S. Morgan
Robert L. Pritchard
Blair A. Rowley
Ralph M. Showers
B. W. Whittington

--`,,`-`-`,,`,,`,`,,`---

Copyright The Institute of Electrical and Electronics Engineers, Inc.
Provided by IHS under license with IEEE
No reproduction or networking permitted without license from IHS
Not for Resale

CLAUSE PAGE

1. Introduction 1

1.1 General 1
1.2 Scope and Purpose 1

2. Definitions 2

3. References 2

4. Short-Circuit Current Interruption Process 3

4.1 Circuit Breaker Performance During Interruption; Basic Intervals 3
4.2 State of Interrupting Process 4

5. Basic Principles of Synthetic Test 4

5.1 Principles 4
5.2 Basic Components 4

6. Synthetic Test Circuits 5

6.1 Current Injection Method 5
6.2 Voltage Injection Method 8
6.3 Duplicate Circuit Method 8
6.4 Synthetic Test Circuits; Choice of Methods 9

7. Requirements for Synthetic Test Methods 9

7.1 High-Current Interval 10
7.2 Interaction Interval 10
7.3 High-Voltage Interval 10
7.4 Discussion 10

8. Parameters, Test Procedures, and Tolerances 10

8.1 High-Current Interval; Voltage of Current Circuit 10
8.2 Interaction Interval — Current Injection Circuit 12
8.3 High-Voltage Circuit 13

9. Short-Line Fault 15

10. Multiple Loops 15

10.1 Method with Single Application of the Voltage Circuit 15
10.2 Method with Multiple Application of Voltage Circuits 16

11. Circuit Breakers Equipped with Parallel Impedance 16

11.1 General 16
11.2 Four Part Test Method 17

Copyright The Institute of Electrical and Electronics Engineers, Inc.
Provided by IHS under license with IEEE
No reproduction or networking permitted without license from IHS
Not for Resale

CLAUSE PAGE

12. Duty Cycle 18

12.1 Test Duties for Synthetic Testing.... 18
12.2 Test Methods.... 19

13. Test Records....21

13.1 General.... 21
13.2 Current Measurements.... 21
13.3 Voltage Measurements.... 21

Annex A (informative) Distorted Current; Derivation 23

--`,,`-`-`,,`,,`,`,,`---

Copyright The Institute of Electrical and Electronics Engineers, Inc.
Provided by IHS under license with IEEE
No reproduction or networking permitted without license from IHS Not for Resale

Copyright The Institute of Electrical and Electronics Engineers, Inc.
Provided by IHS under license with IEEE
No reproduction or networking permitted without license from IHS
Not for Resale

An American National Standard

IEEE Guide for Synthetic Fault Testing of AC High-Voltage Circuit Breakers Rated on a Symmetrical Current Basis

1. Introduction

1.1 General

To develop and test high-voltage circuit breakers to meet present and future system capabilities requires demonstration of performance at power levels in excess of the capacity of test laboratories or utility systems. Various means have been developed in the past to extend test capabilities such as two part testing or unit testing. A major extension of test capability results from the use of multiple source circuits.

ANSI C37.06-1979, [1] [1], establishes current and voltage requirements which may not be possible to achieve on direct tests. Multiple source circuits, generally identified as synthetic circuits, can achieve the required characteristics.

1.2 Scope and Purpose

This guide is intended to provide a basis for synthetic testing of circuit breakers (see ANSI/IEEEC37.04-1979 [2]) and to establish the criteria for testing to demonstrate the short-circuit current rating of circuit breakers on a single phase basis.

It is recognized that other test requirements exist (such as capacitor switching, or line dropping) but they will be reserved for future consideration.

The guide contains typical circuits for demonstrating interrupting capability. These circuits are those in general use and their inclusion should not exclude the development of additional circuits to demonstrate specific capabilities.

The purpose of this guide is to establish criteria for synthetic testing and for the proper evaluation of results. Such criteria will establish validity of the test method without imposing restraints on innovation and improvement of test circuitry.

[1]Numbers in brackets correspond to those of the References, Section 3 of this guide.

Copyright © 1981 IEEE All Rights Reserved

--`,,`-`-`,,`,,`,`,,`---
Copyright The Institute of Electrical and Electronics Engineers, Inc.
Provided by IHS under license with IEEE
No reproduction or networking permitted without license from IHS
Not for Resale

2. Definitions

auxiliary circuit breaker: The circuit breaker used to disconnect the current circuit from direct connection with the test circuit breaker.

current circuit: That part of the synthetic test circuit from which the major part of the power frequency current is obtained.

current injection method: A synthetic test method in which the voltage circuit is applied to the test circuit breaker before power frequency current zero.

direct test: A test in which the applied voltage, current, and recovery voltage is obtained from a single power source, which may be comprised of generators, transformers, networks, or combinations of these.

distorted current: The current through the test circuit breaker which is influenced by the arc voltage of both the test and auxiliary circuit breakers during the high current interval (Fig 9).

injected current: The current which flows through the test circuit breaker from the voltage source of a current injection circuit when this circuit is applied to the test circuit breaker.

injected-current frequency: The frequency of the injected current.

injection time: The time with respect to the power frequency current zero when the voltage circuit is applied.

post-arc current: The current which flows through the arc gap of a circuit breaker immediately after current zero, and which has a substantially lower magnitude than the test current.

prospective current: The current that would flow if it were not influenced by the circuit breaker.

synthetic test: A test in which the major part of, or the total current, is obtained from one source (current circuit), and the major part of, or all of the transient recovery voltage from a separate source or sources (voltage circuit).

test circuit breaker: The circuit breaker under test.

voltage circuit: That part of the synthetic test circuit from which the major part of the test voltage is obtained.

voltage-injection method: A synthetic test method in which the voltage circuit is applied to the test circuit breaker after power frequency current zero.

3. References

[1] ANSI C37.06-1979, Preferred Ratings and Related Required Capabilities for AC High-Voltage Circuit Breakers Rated on a Symmetrical Current Basic **(Consolidated Edition)**[2]

[2] ANSI/IEEE C37.04-1979, Rating Structure for AC High-Voltage Circuit Breakers Rated on a Symmetrical Current Basis (**Consolidated Edition,** including Supplements C37.04a, C37.04b, and C37.04c)

[3] ANSI/IEEE C37.09-1979, Test Procedure for AC High-Voltage Circuit Breakers Rated on a Symmetrical Current Basis **(Consolidated Edition)**

[2]ANSI documents are available from The American National Standards Institute, 1430 Boardway, New York, N.Y. 10018.

Copyright © 1981 IEEE All Rights Reserved

Copyright The Institute of Electrical and Electronics Engineers, Inc.
Provided by IHS under license with IEEE
No reproduction or networking permitted without license from IHS Not for Resale

4. Short-Circuit Current Interruption Process

4.1 Circuit Breaker Performance During Interruption; Basic Intervals

The Circuit breaker has two basic positions: closed and opened. In the closed position the circuit breaker conducts full current with negligible voltage drop across its contacts. In the open position it conducts negligible current but with full voltage across the contacts. This defines two main stresses, the current stress and the voltage stress, that are separated in time.

However, the main function of the circuit breaker is neither to conduct nor to isolate. It performs its main function in changing from one condition to the other, that is, the switching operation. If closer attention is paid to the voltage and current stresses during the interrupting test (Fig 1), three main intervals can be recognized.

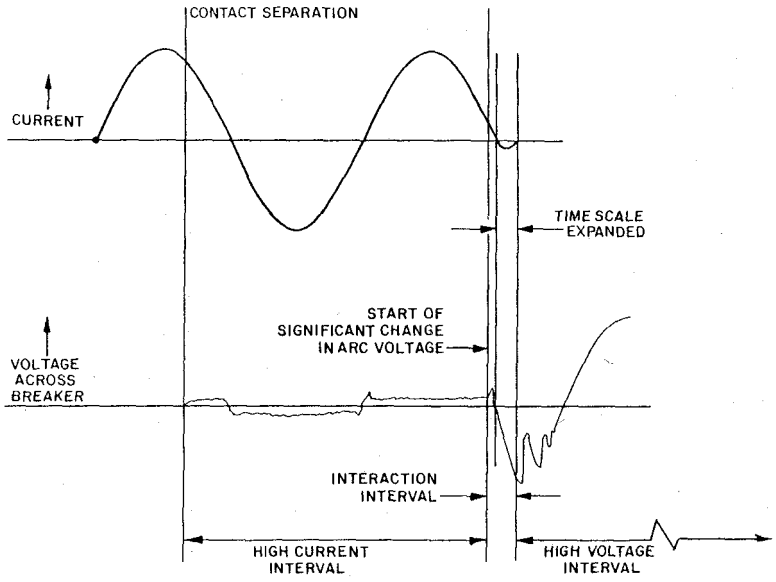

Figure 1— Three Basic Intervals of Interrupting Process

4.1.1 High-Current Interval

The high-current interval is the time from contact separation to the significant change in arc voltage preceding the interaction and high-voltage intervals.

4.1.2 Interaction Interval

The interaction interval is the time from the significant change in arc voltage prior to current zero to the time when the current including the post arc current, if any, ceases to flow through the test breaker.

4.1.3 High-Voltage Interval

The high-voltage interval is the time from the moment when the current including the post arc current, if any, ceases to flow through the test breaker to the end of the test.

Copyright © 1981 IEEE All Rights Reserved

Copyright The Institute of Electrical and Electronics Engineers, Inc.
Provided by IHS under license with IEEE
No reproduction or networking permitted without license from IHS Not for Resale

4.2 State of Interrupting Process

The three intervals described in 4.1.1 to 4.1.3 follow each other immediately, that is, they cover the whole interrupting process without any discontinuities, even though it might be difficult to establish precisely the moment when one interval ends and the other begins. However, this accuracy may not be required.

4.2.1 State of Interrupting Process During Three Basic Intervals

The quantities determining the physics of the interrupting process change considerably during the circuit breaking operation. In fact, the prevailing physical conditions have different importance during the three time intervals.

4.2.2 High-Current Interval

During the high-current interval, short-circuit current is flowing through the circuit breaker with a relatively small voltage drop across the contacts. A large amount of energy is supplied to the arc establishing the state of ionization, temperature, dynamic pressure, etc, important for the switching function.

4.2.3 Interaction Interval

During the interaction interval, the short-circuit current stress changes into high-voltage stress and the breaker performance can significantly influence the currents and voltages in the circuit. As the current decreases to zero, the arc voltage may rise to charge parallel capacitance and distort current passing through the arc. After the current zero the post arc conductivity may result in additional damping of the transient recovery voltage and thus influence the voltage across the breaker and the energy supplied to the ionized contact gap. The mutual interaction between the circuit and the circuit breaker immediately before and after current zero (that is, during the interaction interval) is of extreme importance to the switching process.

4.2.4 High-Voltage Interval

During the high-voltage interval, the gap of the breaker is stressed by recovery voltage. The circuit breaker is now a passive element in the circuit.

5. Basic Principles of Synthetic Test

5.1 Principles

Synthetic testing methods are based on the fact that the circuit breaker is stressed by high current and by high voltage at different times with only a short interval of overlap. It is possible, therefore, to apply the stresses by means of separate test circuits. The current stress occurs during the high-current interval followed by the voltage stress during the high-voltage interval. The period of overlap of the current and voltage stress takes place during the interaction interval.

5.2 Basic Components

A synthetic testing circuit is characterized by two basic components:

5.2.1 Current Circuit

The current source supplies the required current through the test breaker during the high-current interval. The required voltage of the current circuit is substantially lower than that of the corresponding direct circuit but sufficiently high to

Copyright © 1981 IEEE All Rights Reserved

Copyright The Institute of Electrical and Electronics Engineers, Inc.
Provided by IHS under license with IEEE
No reproduction or networking permitted without license from IHS Not for Resale

drive the necessary current to establish the arc conditions. Typically, the high-current circuit is supplied from generators, transformers, power systems, or combinations of these.

5.2.2 Voltage Circuit

The voltage circuit supplies the required voltage across the test circuit breaker during the high voltage interval. The available current of the high-voltage source may be substantially lower than that of the corresponding direct circuit.

Practically, the high-voltage circuit may be supplied with high voltage which may vary from dc to high frequencies. A precharged capacitor bank is the high voltage source most commonly used in synthetic testing laboratories.

6. Synthetic Test Circuits

6.1 Current Injection Method

The current injection method can be described in terms of general requirements or principles:

1) The current injection method introduces a current from the high-voltage source into the test circuit breaker prior to the interaction interval.
2) An auxiliary circuit breaker interrupts the current from the high-current source prior to the interaction interval.
3) The $\frac{di}{dt}$ of the injected current at current zero is equal to, or greater than, the $\frac{di}{dt}$ that would have been produced by the fault current under direct test conditions.
4) Consequently, the breaker during the interaction period is connected with and interacts with a voltage source having the circuit parameters similar to those in the direct test.

Two current injection methods are described in 6.1.1 and 6.1.2.

6.1.1 Parallel Current Injection Circuit

In this circuit the high-voltage source is connected in parallel with the high-current source (Fig 2). This method is used by the majority of test laboratories. The test circuit operation can be described as follows:

1) The test is initiated by closing the making switch which allows current i_1 to flow through the current limiting reactor L_c, the auxiliary circuit breaker, and the test circuit breaker.
2) Prior to the interaction interval, the spark gap is triggered at time t_1, (see Fig 3) and current i_2 is injected and flows through the high-voltage reactor L_v, and test circuit breaker.
3) The current through the test breaker is i_1 plus i_2 until time t_2 when the auxiliary breaker isolates the current circuit from the voltage circuit.
4) The current through the test breaker is i_2 until time t_3, when the test breaker interrupts and the transient recovery voltage (TRV) is impressed across the test breaker.

6.1.2 Series Current Injection Circuit

In this circuit, the high-voltage source is connected in series with the high-current source voltage (see Fig 4). A description of the circuit operation follows:

1) The test is initiated by closing the making switch which allows i_1 to flow through components L_c, the auxiliary circuit breaker, and the test circuit breaker.

Copyright © 1981 IEEE All Rights Reserved

Copyright The Institute of Electrical and Electronics Engineers, Inc.
Provided by IHS under license with IEEE
No reproduction or networking permitted without license from IHS Not for Resale

2) The spark gap is triggered at time t_1, (see Fig 5) and current i_2 flows through components of the voltage circuit. This current, i_2, is in the opposite direction of i_1 through the auxiliary breaker.
3) The instantaneous value of i_1 equals that of i_2 (in the opposite direction) at time t_2 as indicated in Fig 5 and the current through the auxiliary breaker is extinguished.
4) The current through the test circuit breaker from time t_2 to t_3 is i_3, that is, the current produced by the current source and voltage source connected in series. Components L_c, L_v and the test breaker now form the voltage circuit.
5) At time t_3, the test breaker interrupts and the transient recovery voltage (TRV) is impressed across the test breaker.

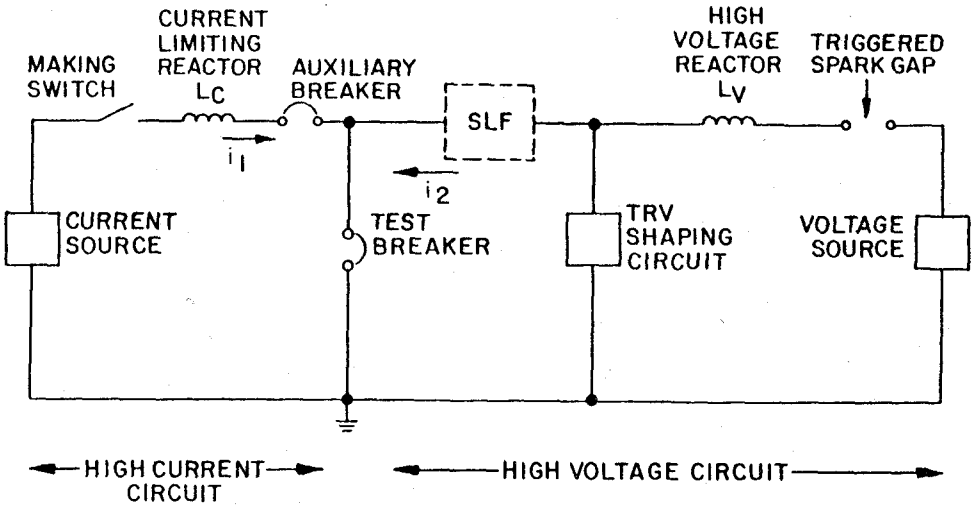

Figure 2— Parallel Current Injection Test Circuit

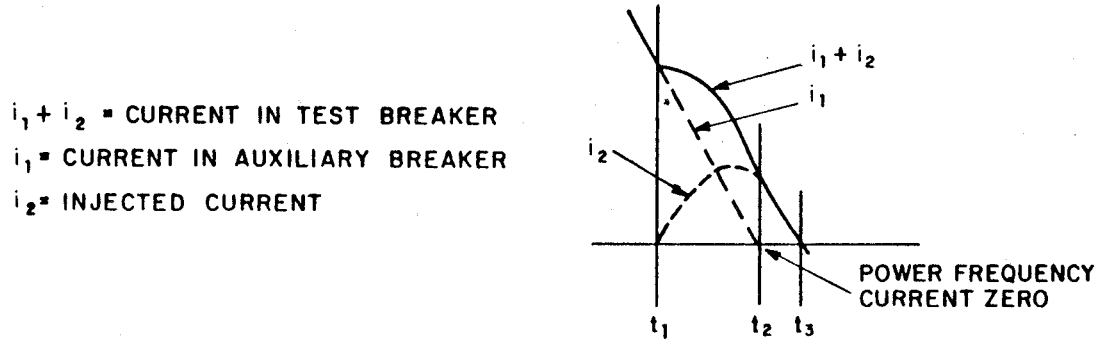

Figure 3— Parallel Current Injection; Current Waveshape

Copyright © 1981 IEEE All Rights Reserved

Copyright The Institute of Electrical and Electronics Engineers, Inc.
Provided by IHS under license with IEEE
No reproduction or networking permitted without license from IHS
Not for Resale

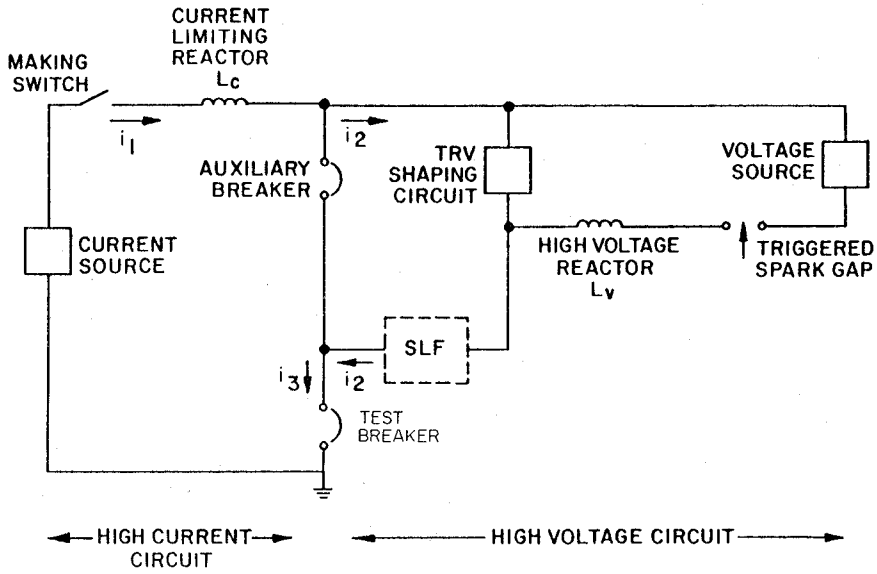

Figure 4— Series Current Injection Test Circuit

$i_3 = i_1 + i_2$ = CURRENT IN TEST BREAKER

$i_1 - i_2$ = CURRENT IN AUXILIARY BREAKER

i_2 = INJECTED CURRENT

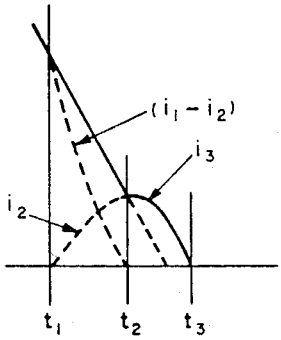

Figure 5— Series Current Injection Current Waveshapes

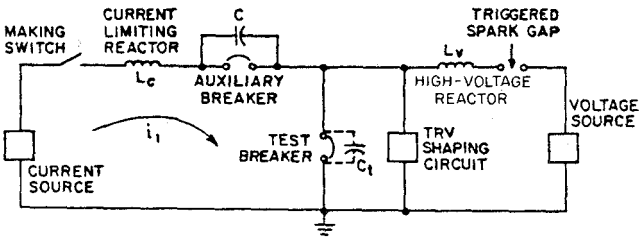

Figure 6— Voltage Injection Test Circuit

Copyright © 1981 IEEE All Rights Reserved

Copyright The Institute of Electrical and Electronics Engineers, Inc.
Provided by IHS under license with IEEE
No reproduction or networking permitted without license from IHS
Not for Resale

6.2 Voltage Injection Method

The voltage injection method can be described in terms of general requirements or principles:

1) The voltage injection method introduces the voltage source after current zero near the peak of the recovery voltage of the current circuit.
2) An auxiliary circuit breaker with a parallel capacitor is used to apply the recovery voltage of the current source to the test circuit breaker.
3) Consequently, during the high-current interval and the initial part of the transient recovery voltage (TRV) the test circuit breaker interacts only with the high-current source.

A diagram of the voltage injection circuit is depicted in Fig 6. A description of the voltage injection circuit operation follows:

1) The test is initiated by closing the making switch which allows i_1 to flow through components L_c, the auxiliary circuit breaker and the test circuit breaker.
2) At t_o the high current is interrupted by both the auxiliary and test circuit breakers. The initial part of the transient recovery voltage is supplied from the high-current circuit by division of voltage between the auxiliary and test circuit breakers.
3) The spark gap is fired at t_1 to produce the remainder of the transient recovery voltage (TRV) from the high-voltage circuit as shown in Fig 7.

6.3 Duplicate Circuit Method

The principle of this method lies in the fact that the current and voltage circuits are supplied from the same source.

A typical duplicate circuit arrangement is shown in Fig 8:

1) The test is initiated by closing the making switch. Current flows through components L_c, the auxiliary circuit breaker, and the test circuit breaker.
2) The current i_1 is interrupted by both the auxiliary and test circuit breakers. The auxiliary circuit breaker isolates the high voltage from the current source and the test circuit breaker experiences the recovery voltage from the transformer circuit. The resistance R in the high-voltage circuit should limit the current contribution of the high-voltage circuit during the high-current interval, control the conditions around current zero, and allow for proper voltage stress after the test breaker interrupts the test current.

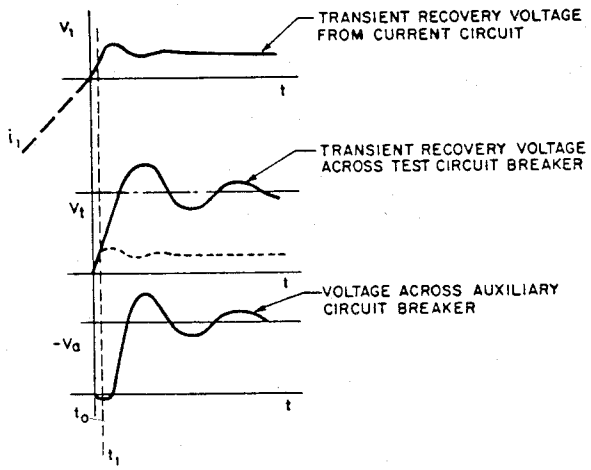

Figure 7— Voltage Injection; Voltage Waveshapes

Copyright © 1981 IEEE All Rights Reserved

Copyright The Institute of Electrical and Electronics Engineers, Inc.
Provided by IHS under license with IEEE
No reproduction or networking permitted without license from IHS
Not for Resale

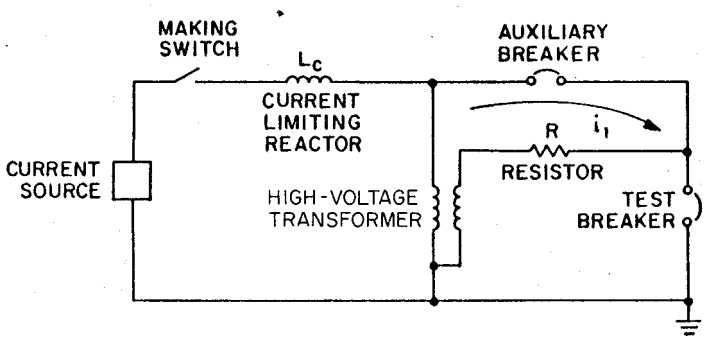

Figure 8— Duplicate Circuit Test Arrangement

6.4 Synthetic Test Circuits; Choice of Methods

Any particular synthetic method chosen for testing must adequately stress the test breaker. Generally, the adequacy is established when the test method meets the requirements set forth in Section 7.

The interaction period presents the critical time for the adequacy of voltage and current stresses. The current injection methods offer a great advantage because during the interaction interval, the test breaker is exposed to a circuit which has basically the same parameters within certain tolerances as the corresponding direct circuit. For this reason the interaction of the circuit breaker with the circuit and the stresses on the test breaker approach those of direct tests. This establishes the general validity of current injection methods.

Current injection methods have become the most widely used synthetic test circuits. Therefore the remainder of this guide primarily covers current injection methods.

It is difficult to demonstrate the general validity of voltage injection methods, particularly for the interaction interval. However, it may be possible to establish the validity for some circuit breakers. As these problems depend on specific breaker characteristics, they are not treated in this guide.

Before voltage injection methods are used there should be common agreement and an understanding of the operation and limitations of these methods by both the user and the manufacturer. These methods can be useful for testing specific aspects of circuit breaker performance such as tests for dielectric restrikes, particularly for late peaks of transient recovery voltage, phase opposition tests, etc.

Other methods may prove correct and advantageous for testing of breakers with specific characteristics or for specific performance. Even though these methods are not covered by this guide they can be used subject to understanding of their application and agreement between the manufacturer and the user.

7. Requirements for Synthetic Test Methods

A synthetic test method is considered a satisfactory equivalent to a direct test for short-circuit current interruption tests if the following requirements are met:

Copyright © 1981 IEEE All Rights Reserved

Copyright The Institute of Electrical and Electronics Engineers, Inc.
Provided by IHS under license with IEEE
No reproduction or networking permitted without license from IHS
Not for Resale

7.1 High-Current Interval

During the high-current interval the circuit breaker shall be stressed by the current circuit so that its arc gap at the end of the high-current interval will be in a state presenting the same conditions as during the direct test. This includes such conditions as state of ionization, temperatures, gas flow pressures, electrode heating, etc.

7.2 Interaction Interval

During the interaction interval, the current and voltage waveforms shall be the same for a synthetic test as in the direct test, taking into account the possible deviations of the currents and voltages from the prospective values due to the interaction of the circuit breaker and the circuit parameters.

The application of current and voltage stresses shall be continuous throughout the interaction interval. The auxiliary breaker must not unduly influence the switching phenomena in the test breaker. The available current in the test circuit during the whole interaction interval must be of sufficient magnitude in relation to the maximum of the expected post arc current so the latter is not limited.

7.3 High-Voltage Interval

The voltage during the entire high-voltage interval shall be equal to or greater than the specified envelope for transient recovery voltages specified by ANSI C37.06-1979. [1] The impedance of the circuit must be low enough to provide for reignitions or restrikes if they occur.

7.4 Discussion

The requirements of 7.1, 7.2, and 7.3 are formulated in a general way to facilitate the use of any synthetic method which can give satisfactory results.

It is possible that test methods other than those previously described in this guide will satisfy the above requirements. Methods, which may not be correct for general use, may be correct for a specific type of circuit breaker or specific part of the testing program. For example, the performance of a breaker for dielectric restrike can be tested by voltage injection or other methods that meet only the requirements stated in 7.3, provided that the performance for thermal reignitions is tested also. This can be accomplished by demonstrating separately the performance in the interaction interval using either the current injection method, or some different method which is shown to stress the breaker correctly. Proof of satisfaction of the requirements of 7.1, 7.2 and 7.3 can be based either on theoretical or on experimental grounds, or both, and may be specific only to certain types of circuit breakers, or to certain parts of the testing program on a breaker.

The foregoing discussion is consistent with the approach for indirect testing as covered in ANSI/IEEE C37.09-1979 [3].

8. Parameters, Test Procedures, and Tolerances

The parameters of the synthetic test circuit and the test procedure shall be such that the short-circuit current and the resultant recovery voltage meet the specified requirements for the circuit breaker under test.

8.1 High-Current Interval; Voltage of Current Circuit

During the high-current interval the circuit breaker shall be stressed by the test circuit so that it presents the same starting conditions for the interaction interval as during the direct test.

Copyright © 1981 IEEE All Rights Reserved

Copyright The Institute of Electrical and Electronics Engineers, Inc.
Provided by IHS under license with IEEE
No reproduction or networking permitted without license from IHS Not for Resale

In synthetic testing the ratio of high-current circuit voltage to arc voltage is low due to the lower voltage required for the current circuit and the summation of the arc voltage of both the auxiliary and test circuit breakers. The arc voltage has a more pronounced influence on the current, reducing both the peak and duration of the current loop. The peak value of the current occurs after the midpoint of the loop (Fig 9).

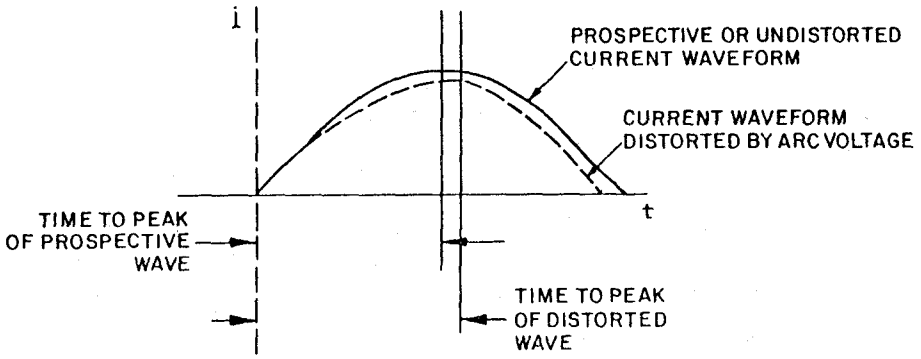

Figure 9— Effect of Arc Voltage on Current Waveform

Actual or calculated distortion effects encountered on direct tests may be used as guidelines of allowable current distortion on synthetic tests (see Appendix A).

In the absence of equivalent direct test data, to assure full severity in synthetic testing, a maximum permissible influence is stated in terms of tolerance of current, amplitude and loop duration.

8.1.1 Final Current Loop

The test short-circuit current shall be measured at the instant of contact separation as done in direct tests (see ANSI/IEEE C37.09-1979 [3]. The amplitude of the final current loop shall not be less than 95% of the ac component as measured at contact separation taking into consideration the test duty, and the procedures of 8.1.3.

8.1.2 Duration of Final Current Loop

The duration of the final current loop shall not depart in either direction by more than 10% of the prospective value of the test frequency loop duration.

8.1.3 Procedures for Adjusting the Current Circuit

To keep within the tolerances specified in 8.1.1 and 8.1.2, it is permissible to introduce some compensation in the high-current circuit. If the circuit breaker arc voltage characteristic is such that it modifies the current in service or in a direct test, then this influence on current amplitude and loop duration is acceptable when considering the tolerances given in 8.1.1 and 8.1.2. However, when this modifying effect exceeds 5% of the amplitude, compensation techniques can be used to adjust the peak of the last loop of current to satisfy the requirements. In lieu of compensation, if justification that such distortion is a function of the circuit breaker interrupting characteristics can be demonstrated, then modifying effects in excess of 5% of the final loop are permitted. Compensation of the peak current may be achieved by reducing the inductance of the current circuit or increasing the current source voltage, or both.

Reduction in loop duration can be offset by closing the fault making switch so as to introduce a small degree of asymmetry (in case of asymmetrical tests a small additional degree of asymmetry) and this to some extent will also compensate for the reduction in peak current. Compensation for loop duration may be accomplished by a reduction in the power frequency when such control is available.

Copyright © 1981 IEEE All Rights Reserved

Copyright The Institute of Electrical and Electronics Engineers, Inc.
Provided by IHS under license with IEEE
No reproduction or networking permitted without license from IHS Not for Resale

The distortion effects and compensating methods described apply to the final current loop prior to the application of the voltage circuit. In the case of tests with multiple loops of arcing, care should be taken to ensure that compensation of the final loop, by introducing additional asymmetry, does not cause excessive reduction of the peak value of the preceding current loop. Therefore compensation through increased asymmetry should be kept to a minimum.

8.2 Interaction Interval — Current Injection Circuit

The synthetic circuit shall be such that the circuit breaker and the circuit interact in a manner similar to that of an equivalent direct test.

In order to achieve this, the transition from the high-current circuit to the high-voltage circuit shall be completed before there is a significant change in the arc voltage of the circuit breaker (Fig 1 and see 8.2.5).

8.2.1 Rate-of-Change of Injected Current (di/dt)

The $\frac{di}{dt}$ of the prospective injected current shall be at least as great as the $\frac{di}{dt}$ of the prospective short-circuit current. The rate-of-change, $\frac{di}{dt}$ of injected current, shall be measured at the end of the first loop by switching the voltage circuit into a shorted test circuit breaker. In determining the value of $\frac{di}{dt}$ for an asymmetrical test, the reduction of $\frac{di}{dt}$ due to the dc component shall be taken into account. The wave shape of the injected current should be free of superimposed oscillations for a period extending to not less than 100 μs before current zero.

8.2.2 Inductance of High-Voltage Circuit

While it is desirable to have the inductance of the high-voltage circuit the same as that of a direct test, it is recognized that deviation from this requirement may be both advisable and practical. Such deviation may be beneficial in demonstrating a much wider range of transient recovery voltage (TRV) performance. At this time is is deemed desirable to keep the maximum deviation of the value of inductance to 50%. For the parallel current injection circuit, the equivalent inductance is shown schematically as L_v (see Fig 2). The equivalent inductance of the series injection circuit is L_c and L_v (see Fig 4).

The capacitance of the voltage source is related to the frequency f_v and the equivalent inductance (L_v in Fig 2 and L_c and L_v in Fig 4) of the current injection circuit. The wave-shaping capacitor (TRV shaping circuit in Figs 2 and 4) should be chosen in combination with any other capacitor, damping resistor and, if used, short-line fault network, to give the specified inherent transient recovery voltage characteristics as required by 4.6.5.3 and 4.6.5.4 of ANSI/IEEE C37.09-1979, [3].

8.2.4 Frequency of Injected Current

The limits of the frequency, f_v, of the injected current depend mainly upon the arc voltage characteristics of the circuit breaker. A check should be made to determine the period of significant change of arc voltage as shown in Fig 1. The arc voltages of circuit breakers vary considerably in general shape. In many cases the voltage is not steady but fluctuates about a mean value. For the purpose of determining a significant change of arc voltage when approaching current zero, the mean value, obtained by drawing a smooth curve between the instantaneous crests and troughs, is used. The shape of the mean arc voltage characteristics may also vary widely.

Some circuit breakers show a nearly constant or steadily rising voltage during the current loop, with an appreciable *increase* just prior to current zero (see Fig 1). In other cases there is an appreciable *decrease* just prior to current zero. In such cases it is not difficult to determine from the oscillogram the instant at which a significant change begins.

Copyright © 1981 IEEE All Rights Reserved

Copyright The Institute of Electrical and Electronics Engineers, Inc.
Provided by IHS under license with IEEE
No reproduction or networking permitted without license from IHS Not for Resale

For this purpose, it is preferable to use an oscillograph giving a relatively high deflection for the arc voltage and having a time scale fast enough to enable the period of significant change of arc voltage to be measured accurately.

The maximum frequency, f_v maximum, of injected current is determined by the period of significant change of arc voltage which period shall be smaller than the time for which the arc is fed by the injected current alone. To achieve this the period of the injected frequency, f_v maximum, should be at least four times the period of significant change of arc voltage. The frequency, f_v, of the injected current should be less than f_v maximum, but high enough to prevent undue current distortion due to the superposition of injected current and power-frequency short-circuit current during the period of arcing (8.2.1). The injected current frequency should be sufficiently below the basic frequency of the transient recovery voltage so that adjustments to the high-voltage circuit elements are minimized. The range of the injected current frequency, f_v, should be between 300 Hz and 1000 Hz. Other frequencies may be used provided sufficient justification of test validity is demonstrated.

It may be difficult to determine the period of significant change of arc voltage because:

1) The arc voltage remains nearly constant or is steadily rising during the current loop almost to the instant of current zero.
2) Changes in the arc voltage occur considerably before the current zero.

In these cases an injection current frequency as low as possible, and not exceeding 750 Hz, shall be used, taking into account the limitations inherent in the choice of injected current frequency.

8.2.5 Injection Timing

The initiation of the injected current shall be adjusted such that the time during which the test circuit breaker is fed by the injected current alone is not more than $^1/_4$ of the period of the injected current frequency f_v, (see Figs 3 and 5).

8.3 High-Voltage Circuit

The inherent transient recovery voltage (TRV) of the synthetic test circuit shall comply with the requirements of ANSI C37.06-1979 [1] and shall in principle comply with the requirements of ANSI/IEEE C37.09-1979 [3] for the power-frequency recovery voltage. The actual test TRV may differ from the circuit TRV because of effects of the circuit breaker. This is permissible if the circuit breaker affects the system voltage in the same manner. However, for the synthetic test circuit additional details and tolerances must be given.

8.3.1 Recovery Voltage for Terminal Faults; Symmetrical Short-Circuit Current

In direct testing the transient recovery voltage is superimposed on the power-frequency system voltage to obtain the total circuit breaker stress. In synthetic testing the recovery voltage is supplied from the voltage circuit. This gives a dc voltage, an ac voltage or combined ac and dc voltage which in most cases decays due to the limited energy of the voltage source. If it is not possible to maintain the recovery voltage as specified in 4.6.5.3 ANSI/IEEE C37.09-1979 [3], the following method is one alternative of demonstrating conformance.

Copyright © 1981 IEEE All Rights Reserved

Copyright The Institute of Electrical and Electronics Engineers, Inc.
Provided by IHS under license with IEEE
No reproduction or networking permitted without license from IHS Not for Resale

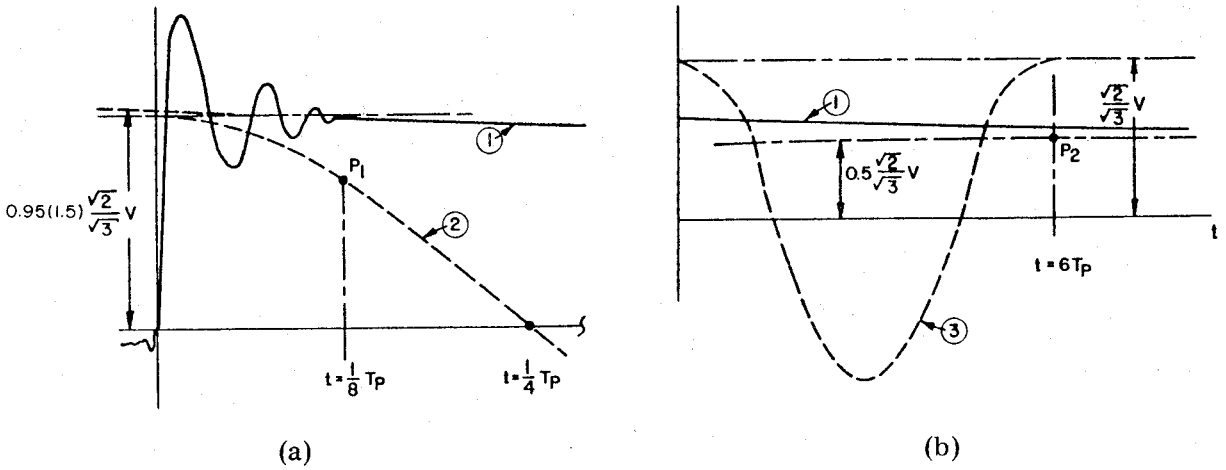

(a) (b)

Explanation of curves:

① Recovery voltage with exponential decrement across the circuit breaker during a synthetic test.

② Power frequency recovery voltage of the first pole to clear in the equivalent direct test where K=1.5.

③ Power frequency phase recovery voltage after interruption of all 3 poles in the equivalent direct test.

P_2 Point below which the recovery voltage ① shall not fall during the specified time interval ($6T_P$) as outlined in 8.3.1.

P_1 Point below which the recovery voltage ① shall not fall during the specified time interval ($1/8 T_P$) as outlined in 8.3.1.

T_P Period of rated power frequency.

Figure 10— Power Frequency Recovery Voltage

For synthetic testing the value of the recovery voltage (that is, excluding TRV) during a period equal to $^1/_8$ th of the cycle at the rated frequency of the circuit breaker, shall not be less than the equivalent value of the power frequency recovery voltage which starts with the minimum peak value of:

$$0.95 K_{cf} \sqrt{\frac{2}{3}} \text{ V}$$

where:

K_{cf} = first pole to clear factor (1.5)
V = maximum rated voltage of the circuit breaker, (see Fig 10(a).

Within 0.1 s, an exponentially decaying dc recovery voltage shall not fall below 50% of

$$\sqrt{\frac{2}{3}} \text{ V}$$

(See Fig 10(b).

If the recovery voltage oscillates (an ac voltage, or combined ac and dc voltage) then the minimum value of the voltage peak shall not, before 0.1 s, fall below 50% of

$$\sqrt{\frac{2}{3}} \text{ V}$$

Copyright © 1981 IEEE All Rights Reserved

Copyright The Institute of Electrical and Electronics Engineers, Inc.
Provided by IHS under license with IEEE
No reproduction or networking permitted without license from IHS Not for Resale

If an exponentially decaying dc or combined dc and ac recovery voltage imposes a greater stress on the circuit breaker than the ac recovery voltage in the equivalent direct test, or if the value cannot be maintained for the stated time interval then a more appropriate circuit may be used taking into account the previously stated limits of both transient and power frequency recovery voltage.

8.3.2 Recovery Voltage for Terminal Faults; Asymmetric Short-Circuit Current

The recovery voltage envelope for asymmetrical faults needs to be modified in accordance with the degree of asymmetry. A rating structure for TRV waveshapes under asymmetric fault conditions is presently under study.

8.3.3 Recovery Voltage for Short-Line Faults

Synthetic testing under short-line fault conditions shall be in accordance with ANSI/IEEE C37.09-1979 [3], especially with respect to test current, recovery voltage and transient recovery voltage of line and source sides. Further discussion of these principles is included in Section 9.

9. Short-Line Fault

Short-line fault tests performed in a synthetic circuit shall meet the same conditions as outlined in ANSI/IEEE C37.09-1979 [3].

For direct tests the circuit parameters specified result in a proper sawtooth waveshape of transient recovery voltage (TRV).

For short-line fault synthetic testing the parameters of the short-line circuit shall be the same as in a direct test and the short line shall be in the current-carrying circuit during the entire interaction interval. If other parameters and circuits are used, their equivalency must be demonstrated. To obtain the steep initial rate-or-rise of transient recovery voltage specified for short-line fault tests it is necessary to use a short-line fault network giving a sawtooth waveform with the correct voltage/time characteristics.

With current injection circuits the short-line fault circuit may be connected in series with the voltage circuit, its inductance becoming part of L_v, as shown in Figs 2 and 4.

The presence of the short-line fault circuit in the voltage circuit may cause oscillations to be superimposed on the injected current wave. These oscillations should be damped out, (to satisfy the requirements of 8.2.1) so as not to affect the current during the period of significant change of arc voltage or at least 100 μs before current zero. A resistance may be connected in series with the TRV shaping circuit (see Fig 2 and 4). In most cases, this resistance, selected to control the initial rate of rise of recovery voltage, is sufficient to supply the necessary damping.

10. Multiple Loops

To demonstrate the performance of the breaker at the maximum arcing time, the following methods may be used.

10.1 Method with Single Application of the Voltage Circuit

If the test facility provides for only a single application of recovery voltage, then appropriate testing procedures and methods for arcing time prolongation (for example, reignition circuits) can be used.

Copyright © 1981 IEEE All Rights Reserved

Copyright The Institute of Electrical and Electronics Engineers, Inc.
Provided by IHS under license with IEEE
No reproduction or networking permitted without license from IHS Not for Resale

10.1.1

To determine the maximum arcing time the following step by step procedure may be used. The arcing time may be varied until the minimum arcing time is established. Minimum arcing time is that below which the breaker would not clear. As in direct testing, the maximum arcing time of a breaker is considered to be equal to minimum arcing time plus one half cycle, except as modified by the requirements of 4.9, ANSI/IEEE C37.09-1979, [3], for single-phase testing to demonstrate 3-phase ungrounded faults, or for asymmetrical tests.

10.1.2

When the arcing time extends for more than one-half cycle, the test breaker may interrupt the current supplied only by the current source while it would fail at the same current zero if the voltage circuit were applied. To check whether the test breaker clears the full circuit at the subsequent current zero, it is necessary to maintain or re-establish the conductivity of the test breaker and auxiliary breaker.

In some cases arcing can be prolonged by delaying the opening of the auxiliary circuit breaker or by increasing the rate-of-rise of the transient recovery voltage of the power-frequency current circuit. The effectiveness of this method depends upon the characteristics of the high-current circuit and the circuit breaker.

For those cases where these methods are not sufficient, a separate circuit can be used for reigniting both auxiliary and test circuit breakers. This circuit should provide a rapidly rising pulse of current of opposite polarity to that of the power-frequency current 10-100 μs before current zero. The current through the test circuit breaker and the auxiliary circuit breaker is thus rapidly reversed and conduction in the arc gaps is maintained for another loop of power-frequency current. Several such circuits can be used for prolonging the arcing through several loops of current.

10.2 Method with Multiple Application of Voltage Circuits

With this method the voltage circuit is connected to the test circuit breaker at each current zero, however if the breaker clears the procedure is stopped. If the breaker reignites, the current source is reconnected and a voltage of the proper polarity is reapplied at the next current zero.

If the voltage circuit has insufficient energy for application at several current zeros, it is necessary to have as many voltages sources as the breaker has reignitions, plus one.

This method is practically the same procedure as with direct testing, taking into account the relationship between breaking at the first zero and at the following zeros.

11. Circuit Breakers Equipped with Parallel Impedance

11.1 General

Impedances in parallel with the arc may be either capacitors or resistors, or both, in various combinations. Although such impedances modify the shape of the specified inherent transient recovery voltage, the type and degree of modification in the synthetic test should be the same as in the direct test.

For example, the insertion of a resistor equal to the surge impedance of the line will reduce the line side rate-of-rise to half value. The effect is not as pronounced for a bus fault where a large number of lines are in parallel because their combined surge impedance is much lower than the resistance in parallel with the arc.

Where the shunt impedance is a resistor, particularly if the ohmic value of the resistor is low, the actual peak transient recovery voltage (TRV) in a synthetic test may not attain the value it would in a direct test because of the limited

Copyright © 1981 IEEE All Rights Reserved

Copyright The Institute of Electrical and Electronics Engineers, Inc.
Provided by IHS under license with IEEE
No reproduction or networking permitted without license from IHS Not for Resale

energy available from the voltage source. Furthermore, the shunt resistor may cause a too rapid decay of the dc voltage following the TRV crest.

In some cases, to meet the TRV requirements of ANSI/IEEE C37.09-1979 [3], it may be possible

1) To adjust the parameters of the voltage circuit to provide the necessary additional energy absorbed by the shunt resistor
2) To switch over to an additional ac voltage source capable of maintaining voltage across the resistor. An equivalent transient recovery voltage waveform across the terminals of the test circuit breaker can be produced by replacement of resistance at other appropriate places in test circuits.

11.2 Four Part Test Method

One possible approach to demonstrate validity is to use a four part test method to establish that the overall testing of the test circuit breaker is satisfactory. This method establishes conditions covering thermal, dielectric, and resistor duties under test.

It is essential that the operation and performance of the resistor interrupter is not effected by the operation of the main interrupter for these separate test procedures to be acceptable.

11.2.1 Termal Reignition Test on the Main Interrupter

The object of this part of the test is to establish the performance of the main interrupter during the interaction interval. A synthetic test is made with the resistor mounted in its normal position in the circuit breaker. This test circuit breaker is subject to the normal requirements of 8.2 during a time interval which is long with respect to the interaction interval. Care should be taken not to exceed the integrated thermal duty of the resistor as defined in ANSI/IEEE C37.04-1979 [2].

11.2.2 Dielectric Reignition Test on the Main Interrupter

This part of the test covers the dielectric interval not covered in the thermal reignition test described in 11.2.1.

The resistor is disconnected in the test circuit breaker and the test is made with an equivalent transient recovery voltage. This equivalent test voltage is the inherent transient recovery voltage as would be modified by the presence of the resistor.

Because the interaction of the test circuit parameters with the test circuit breaker has been demonstrated by the thermal tests during the interaction interval, one easement is allowed; namely, that a substitute resistor in the external circuit can be switched into the circuit or other circuit changes can be made at the appropriate time to provide the required voltage waveshape.

Problems can arise during the dielectric test on a multiple connected interrupter. For example, the disconnection of the shunt resistors means that there is no longer any voltage grading apart from that provided by capacitance which in itself may not be sufficient to prevent overstressing one interrupter. One way of overcoming this problem is to attach higher-value resistors across the multiple breaks to provide the voltage grading.

The effect of these resistors must of course be taken into account in providing the correct transient recovery voltage waveform. In all cases the applicable procedures for unit testing outlined in ANSI/IEEE C37.09-1979 [3] should be followed.

11.2.3 Test on Resistor

Power frequency tests are required to demonstrate that the resistor and connections can meet the thermal and voltage conditions, transient and power frequency, imposed by the duty cycle of the circuit breaker in accordance with ANSI/

Copyright © 1981 IEEE All Rights Reserved

--`,,`-`-`,,`,,`,`,,`---
Copyright The Institute of Electrical and Electronics Engineers, Inc.
Provided by IHS under license with IEEE
No reproduction or networking permitted without license from IHS
Not for Resale

IEEE C37.04-1979 [2]. These two requirements can be established separately if it can be demonstrated that the heating of the resistor does not effect the insulation strength.

11.2.4 Test on Resistor Interrupter

This part of the test demonstrates that the resistor interrupter has the required performance. For these tests the current through the resistor interrupter shall be equal to that which would be obtained on a full power direct test.

The ideal direct circuit, with which the resistor and resistor interrupter should be tested, requires the full MVA source at the test voltage. This is clearly impossible and a compromise permits the use of a lower MVA source having higher inductance and higher source voltage to obtain the required power frequency current. This may result in the resistor interrupter being stressed with a higher voltage than is required by the test specification. This generally imposes a more severe test than required on the resistor interrupter.

The resistor interrupter performance may be demonstrated also by using different resistor values provided the interrupter sees proper voltage and current stresses.

Other methods of demonstrating performance such as direct test at less than rated short-circuit current can be used provided the resistor interrupter is subjected to the appropriate current and voltage stresses.

12. Duty Cycle

12.1 Test Duties for Synthetic Testing

The test duties required to demonstrate the single-phase short-circuit interrupting performance of a circuit breaker are listed in Table 2 of ANSI/IEEE C37.09-1979 [3]. The related required transient recovery voltage capabilities are given in ANSI C37.06-1979 [1]. These requirements include operating sequences and duty cycles with specified time intervals, voltages, making currents, interrupting currents, and percent asymmetry.

While it would be desirable to demonstrate exact compliance with the required test duties, practical limitations of synthetic circuit facilities necessitate some allowances as described below.

12.1.1 Time Intervals

Test duties having time intervals of 0 s (15 to 20 cycles) and 15 s associated with reclosing operations usually cannot be performed with the full value of recovery voltage unless multiple voltage circuits and other special techniques are employed. However, for these duty cycles, it is acceptable to use a single voltage circuit but additional tests may be required as described for the various tests.

One test method would include the time interval as shown in ANSI/IEEE C37.04-1979, [2] but with the recovery voltage for the initial open operation from the current source. The first opening operation of a high-speed reclosing cycle performed at current-source voltage should provide the release of arc energy to be expected under a similar full voltage test. The second open operation of the test duty cycle would be made at full recovery voltage. Under these conditions, the high-speed reclosing operation at reduced applied voltage should result in a performance sufficiently close to that which would result from full applied voltage for both operations.

For those breakers where the appropriate arc energy cannot be supplied by the current source for the first opening operation further justification of the test procedure is required. Generally it may be sufficient if the arcing time of the first opening operation is within one half cycle of the maximum arcing time.

Copyright © 1981 IEEE All Rights Reserved

Copyright The Institute of Electrical and Electronics Engineers, Inc.
Provided by IHS under license with IEEE
No reproduction or networking permitted without license from IHS Not for Resale

12.2.2 Closing Test Voltage

The making of rated currents on close-open tests usually cannot be made at full rated voltage. However, the importance of the full rated voltage being applied on the closing operation of the close-open tests depends on the characteristics of the circuit breaker.

Normally it is required to demonstrate that the circuit breaker has the capability of closing against and withstanding the maximum electromagnetic forces associated with the rated asymmetrical current. If the pre-arcing time is short or not appreciably dependent on the applied voltage, and the surrounding medium is unlikely to generate appreciable pressure in the vicinity of the contacts, then the current is the most important factor and the close operation can be made at current source voltage. This will result in a performance sufficiently close to that which would result from full rated voltage.

This procedure is not in conflict with present direct tests on close-open duty cycles.

For those cases where prestriking is appreciable, appropriate synthetic circuits may be used.

12.2 Test Methods

The methods for demonstrating the short-circuit current rating of a circuit breaker are shown in Table 2 of ANSI/IEEE C37.09-1979 [3]. A review of these test duties with regard to modifications for synthetic testing are listed below.

12.2.1 Test Duties 1, 2, and 3

Test duties 1, 2, and 3 specify short-circuit currents, both symmetrical and asymmetrical, less than rating, and consist of both opening (O) and close-open (CO) operations.

Since closing at rated maximum current is required on other duties, the voltage on the close part of the CO operation can be applied by the current circuit. The transient recovery voltage should be the related capability envelope for the appropriate circuit-breaker rating.

12.2.2 Test Duties 4 and 5

Test duties 4 and 5 demonstrate the ability of the circuit breaker to interrupt currents equal to the required symmetrical interrupting capabilities at rated maximum voltage and rated maximum voltage /*K*, with *K* representing the rated voltage range factor.

If circuit capabilities preclude having full recovery voltage for both open operations of the 0–15 s zero duty cycle, it is deemed satisfactory to have the initial interruption at current source voltage and the second interruption at full voltage.

12.2.3 Test Duty 6

Test duty 6 demonstrates the performance of the circuit breaker at rated maximum voltage: closing against currents equal to the required capability and interrupting currents equal to the required asymmetrical interrupting capability with due regard for the reduced transient recovery voltage. Because of the inability of testing circuits to produce all the specified currents and voltages at the specified times, it may not be possible to make test duty 8.1 as specified. In this case, the closing and opening capabilities shall be demonstrated by test duties 8.2 and 8.3 as in direct testing.

12.2.4 Test Duty 7

Test duty 7 demonstrates the performance of the circuit breaker at rated maximum voltage /*K*, and service capability (ANSI/IEEE C37.09-1979, [3], 4.6.3) which is the ability of the circuit breaker to meet the total number of operations required and still be in a specified condition. The test duty required varies with the rating and in each case test duties

Copyright © 1981 IEEE All Rights Reserved

Copyright The Institute of Electrical and Electronics Engineers, Inc.
Provided by IHS under license with IEEE
No reproduction or networking permitted without license from IHS Not for Resale

followed by −2 or −3 together constitute an alternate to the test duty followed by −1. (See note 7 of Table 2, ANSI/IEEE C37.09-1979 [3]). If full voltage interruptions having a time interval of 15 s cannot be met, the duty cycles listed in Table 1 may be adopted for synthetic testing as a substitute for test duty 7.

Based on limitations in the testing station, time *T* is the minimum practical time and should not exceed 6 min.

The voltage for the closing operations may be provided by the current circuit. The recovery voltages associated with opening operations shall be as specified with due regard for asymmetry.

12.2.5 Test Duty 8

Test duty 8 demonstrates the service capability of circuit breakers which do not have to perform test duty 7A, and shows the effect of several interruptions below the rated short-circuit current as specified in 5.10.3.3.1 of ANSI/IEEE C37.04-1979, [2]. The close part of the CO operations may be made with the current circuit.

12.2.6 Test Duties 9 and 10

Test duties 9 and 10 demonstrate high speed reclosing when the circuit breaker is rated for that purpose. When *K*, the rated voltage range factor, is less than 1.2 the test at the higher current of test duty 10 is adequate demonstration and test duty 9 is omitted. The initial interruption and reclosing operation may be made at the current circuit voltage, with the final interruption made at the full recovery voltage.

Table 1— Duty Cycles for Synthetic Testing

7A-2	C-*T* min-C-15	min-C-*T* min-C-1 hour-C
7A-3	O-*T* min-O-15	min-O-*T* min-O-1 hour-O
7B-2	C-*T* min-C-1	h-C
7B-3	O-*T* min-O-1	h-O

12.2.7 Test Duty 11

Test duty 11 demonstrates the ability of the circuit breaker to close against a short circuit, to remain closed until tripped, and to interrupt when tripped as required by ANSI/IEEE C37.09-1979 [3]. Because of difficulties in sustaining the currents, either the current at contact separation may be below *K*I or the current may be supplied for the greater part of the carry time from a low-voltage circuit. This circuit will be switched off by another circuit breaker and a circuit capable of supplying the specified recovery voltage shall be connected before the test circuit breaker is opened. The time, *T*, is controlled in accordance with the provisions of 5.10.2.4 of ANSI/IEEE C37.04-1979 [2] so as to obtain the same value of i^2t, and, consequently, approximately the same heating effect, regardless of the current decrement.

12.2.8 Test Duties 12, 13, and 14

No requirements are listed in ANSI/IEEE C37.09-1979 for these test duties.

12.2.9 Test Duties 15 and 16

Test duties 15 and 16 demonstrate the performance of the circuit breaker during the interruption of short-line faults. When *K* is less than 1.2, test duty 16 is omitted. These tests are made on a phase-to-ground basis with a test circuit as specified in 4.5.6.4 of ANSI/IEEEC37.09-1979 [3]. Each circuit breaker normally has a critical short-line fault location which produces maximum stress. The conditions specified in test duties 15 and 16 in Table 2 of that standard, may not correspond to the critical values of a particular circuit breaker and are intended only as a standard demonstration test. The demonstration test is not required for circuit breakers rated 72.5 kV and below.

Copyright © 1981 IEEE All Rights Reserved

Copyright The Institute of Electrical and Electronics Engineers, Inc.
Provided by IHS under license with IEEE
No reproduction or networking permitted without license from IHS Not for Resale

For synthetic testing purposes the time interval may be altered to 3 min or less and if a duty involving closing operations is used to demonstrate this duty, the close operation may be made at the current-circuit voltage.

13. Test Records

13.1 General

Data to be recorded during synthetic tests should include those listed in the pertinent sections of ANSI/IEEE C37.09-1979 [3]. In addition, the measurements listed below shall be made to demonstrate that the specific requirements of synthetic testing as prescribed in this guide have been met. These measurements should be made on a scale which presents ±5% accuracy.

13.2 Current Measurements

13.2.1 Prospective Injected Current

In order to determine the frequency and rate-of-change of the injected current as it approaches zero, high-speed cathode ray oscillography or other high-frequency recording instrumentation is required. The oscillogram should be recorded with time and amplitude scales such that accurate measurements are possible over the last 100 μs prior to current zero. These measurements shall be taken by discharging the high-voltage circuit into the closed test circuit breaker. These records will serve to verify that the requirements of 8.2.1 have been met.

13.2.2 Current Through the Test Circuit Breaker

This current $i_1 + i_2$, for the parallel or series current injection test (see Figs 2 and 4) should be recorded with reasonable amplitude so that the slope of the current toward zero can be checked with the transient recovery voltage record to make sure that no reignition occurs following the initial current zero.

Adequate resolution in time can be obtained using an electromagnetic-type oscillograph provided that the time scale is such that one loop is of the order of 2.0 cm to 2.5 cm.

13.2.3 Injection Current Timing

It is necessary to measure the timing of injection current relative to the zero of the power-frequency current. In order to determine whether the required limits of timing accuracy have been achieved, high-speed recording of the current in the test circuit breaker is necessary to evaluate the point of injection and the whole of the period of injection. This will enable the related requirements of 8.2.5 to be verified.

13.2.4 Current Through the Auxiliary Circuit Breaker Loop

For convenience in evaluating the auxiliary circuit breaker and overall circuit performance, it is helpful to record the currents through the current circuit and the high-voltage circuit, as well as the test circuit-breaker.

13.3 Voltage Measurements

13.3.1 Current Circuit Voltage

The current circuit voltages across the test and auxiliary circuit breakers shall be recorded to enable the ratio of the arc voltage to the driving voltage to be checked as required by 8.1.3. Adequate resolution of these measurements can be made with a low-frequency electro-magnetic oscillograph.

Copyright © 1981 IEEE All Rights Reserved

Copyright The Institute of Electrical and Electronics Engineers, Inc.
Provided by IHS under license with IEEE
No reproduction or networking permitted without license from IHS Not for Resale

13.3.2 Arc Voltage of Test Circuit Breaker

This measurement will indicate the form of the arc voltage, that is, constant or linear. It further enables a check to be made regarding the timing and frequency of the current injection relative to the period of significant change of arc voltage (8.2.5). Such a record should have sufficient scale for evaluation of the critical arcing period.

CAUTION — Care should be taken into account for the inductive voltage drop of the test circuit breaker which may be of the same order of magnitude as the arc voltage.

13.3.3 Voltage Across Test Circuit Breaker

13.3.3.1 Transient Recovery Voltage (TRV)

To determine the inherent or actual TRV a high-speed cathode ray oscillograph or equivalent recording device is required.

It is recommended that where convenient the current as it approaches zero be recorded on the TRV record with the same resolution.

13.3.3.2 Recovery Voltage

The recovery voltage may be recorded on an electromagnetic oscillograph or equivalent to verify the parameters set forth in 8.3.1.

Copyright © 1981 IEEE All Rights Reserved

Copyright The Institute of Electrical and Electronics Engineers, Inc.
Provided by IHS under license with IEEE
No reproduction or networking permitted without license from IHS Not for Resale

Annex A Distorted Current; Derivation

(Informative)

(This Appendix is not a part of ANSI/IEEE C37.081-1981, IEEE Guide for Synthetic Fault Testing of AC High-Voltage Circuit Breakers Rated on a Symmetrical Current Basis.)

A.1 Introduction

The distorted current mathematically represents the difference between the prospective current and the distortion current. The method of calculation presented here will derive the distorted current, which will then be related to the prospective current to arrive at an expression for the distortion current.

A.2 Derivation

The distortion current which flows during the period of significant arcing may be calculated as follows:

Referring to Fig. A.1(c), if the supply voltage is assumed to be equal to zero, (U=0), then the arc voltage v, will produce a current flow i_d the distortion current. This current flows partly as i_{dL} through the inductance *L*, and partly as i_{dC}, through the capacitance *C*. For this condition the following equations apply:

$$v - \left[L \cdot \frac{di_{dL}}{dt} \right] = 0 \tag{1}$$

$$C \frac{dv}{dt} - i_{dC} = 0 \tag{2}$$

From these the following equation for i_d can be obtained:

$$i_d = i_{dL} + i_{dC} = \frac{1}{L}\int v dt + C \cdot \frac{dv}{dt} \tag{3}$$

For the more general case the formula for the distortion current is:

$$i_d = \frac{d}{dt}\int_0^t A(t-\tau) \cdot u(\tau) \cdot d\tau \tag{4}$$

where

A(t) = transitory response of the system seen from the terminals of the test breaker.

If both the voltages U and u are present (see Figs A.1(b) and A.1(c), then the resulting current is given by

$i = i_k - i_d$ where

i_k = prospective current (5)

A.3 The Influence of the Distortion Current During the Period of Arcing

During this period, the distortion current i_d, influences the reduction to zero of the prospective current i_k, and is a function of the characteristics of the arc gap and the parameters of the network.

Copyright © 1981 IEEE All Rights Reserved

Copyright The Institute of Electrical and Electronics Engineers, Inc.
Provided by IHS under license with IEEE
No reproduction or networking permitted without license from IHS Not for Resale

In comparison with the prospective current, the resulting arc current presents a distortion of the four physical parameters: current amplitude, loop duration, arc energy, and $\frac{di}{dt}$.

As a first approximation two different arc voltage characteristics can be considered:

1) A constant arc voltage $v = V_b$
2) A linearly rising arc voltage, $v = S \cdot t$

where

$V_b = S \cdot \frac{T}{4}$ is assumed

$T = \frac{1}{f}$

$f = \frac{\omega}{2\pi}$ = power frequency

Taking into account that the current through the capacitance C in Fig A.1(a) is small in this period of arcing, the circuit diagram may be simplified by neglecting C. For both of the above arc voltages, the following formulae can be derived, related to a symmetrical current having no dc component:

Copyright © 1981 IEEE All Rights Reserved

Copyright The Institute of Electrical and Electronics Engineers, Inc.
Provided by IHS under license with IEEE
No reproduction or networking permitted without license from IHS Not for Resale

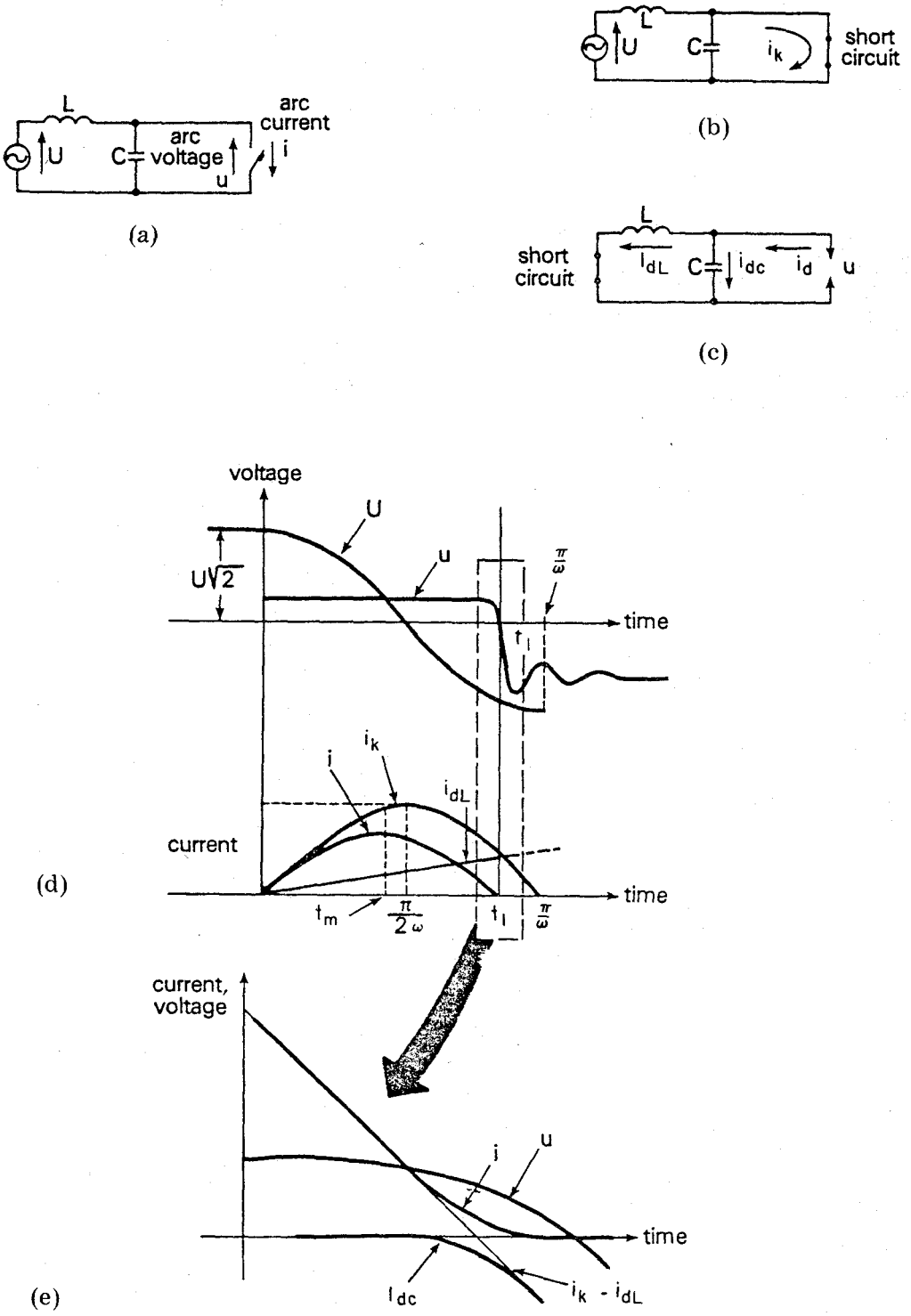

Figure A.1—Distortion Current

Copyright © 1981 IEEE All Rights Reserved

Copyright The Institute of Electrical and Electronics Engineers, Inc.
Provided by IHS under license with IEEE
No reproduction or networking permitted without license from IHS
Not for Resale

These formulae are valid for a single loop of arcing.

$V = L \cdot w \cdot I$ = peak value of driving voltage of power frequency current circuit
I = peak value of prospective current
i = instantaneous value of arc current (reduced by arc voltage)
I_1 = peak value of arc current (reduced by arc voltage)
t_m = instant of peak value of I_1

A.3.1 Ratio of current amplitudes for constant arc voltage:

$$\frac{I_1}{I} = \sin wt_m - \frac{V_b}{V} \cdot wt_m$$

for linearly rising arc voltage:

$$\frac{I_1}{I} = \sin wt_m - \frac{Sw}{2V} t_m^2$$

A.3.2 Moment t_m of maximum current for constant arc voltage:

$$\cos wt_m = \frac{U_b}{V}$$

for linearly rising arc voltage:

$$\cos wt_m = \frac{St_m}{V}$$

A.3.3 Moment t_1 of current interruption for constant arc voltage:

$$\sin wt_1 = \frac{\omega V_b}{V} t_1$$

for linearly rising arc voltage:

$$\sin wt_1 = \frac{Sw}{2V} t_1^2$$

A.3.4 Rate of change of i at the moment t_1 — for constant arc voltage:

$$\frac{di}{dt} = -wI\left[\sqrt{1 - \left(\frac{V_b}{V} wt_1\right)^2} + \frac{V_b}{V}\right]$$

for linearly rising arc voltage:

$$\frac{di}{dt} = -wI\left[\sqrt{1 - \left(\frac{Sw}{2V} t_1{}^2\right)^2} + \frac{St_1}{V}\right]$$

Copyright © 1981 IEEE All Rights Reserved

Copyright The Institute of Electrical and Electronics Engineers, Inc.
Provided by IHS under license with IEEE
No reproduction or networking permitted without license from IHS Not for Resale

A.3.5 Reduction of arc energy. The arc energy released during one arcing loop is dependent upon arc voltage and current so that

$$W_{arc} = \int_{0^1}^{t_1} v\, i\, dt$$

for constant arc voltage:

$$W_{arc} - \frac{V_b I}{w}\left[2 - \frac{1}{2}(\omega t_1)^2 \quad \frac{U_b}{U}\left(1 + \frac{U_b}{U}\right)\right]$$

for linearly rising arc voltage:

$$W_{arc} - \frac{SI}{w^2}\left[\sin wt_1 - wt_1 \cos wt_1 - \frac{S}{8Uw}(wt_1)^4\right]$$

Copyright © 1981 IEEE All Rights Reserved

Copyright The Institute of Electrical and Electronics Engineers, Inc.
Provided by IHS under license with IEEE
No reproduction or networking permitted without license from IHS
Not for Resale