IEEE Standard for Shoulder Live Line Extension Links for Overhead Line Construction

Sponsor

Transmission and Distribution Committee
of the
IEEE Power Engineering Society

Approved 19 March 1998

IEEE-SA Standards Board

Abstract: Dimensions and strength requirements for shoulder live line extension links used in overhead transmission and distribution hardware are covered.
Keywords: ball, socket, eye, clevis, oval eye fitting

The Institute of Electrical and Electronics Engineers, Inc.
345 East 47th Street, New York, NY 10017-2394, USA

Copyright © 1998 by the Institute of Electrical and Electronics Engineers, Inc.
All rights reserved. Published 1998. Printed in the United States of America.

ISBN 0-7381-0194-X

No part of this publication may be reproduced in any form, in an electronic retrieval system or otherwise, without the prior written permission of the publisher.

Copyright The Institute of Electrical and Electronics Engineers, Inc.
Provided by IHS under license with IEEE
No reproduction or networking permitted without license from IHS

Not for Resale

IEEE Standards documents are developed within the IEEE Societies and the Standards Coordinating Committees of the IEEE-SA Standards Board. Members of the committees serve voluntarily and without compensation. They are not necessarily members of the Institute. The standards developed within IEEE represent a consensus of the broad expertise on the subject within the Institute as well as those activities outside of IEEE that have expressed an interest in participating in the development of the standard.

Use of an IEEE Standard is wholly voluntary. The existence of an IEEE Standard does not imply that there are no other ways to produce, test, measure, purchase, market, or provide other goods and services related to the scope of the IEEE Standard. Furthermore, the viewpoint expressed at the time a standard is approved and issued is subject to change brought about through developments in the state of the art and comments received from users of the standard. Every IEEE Standard is subjected to review at least every five years for revision or reaffirmation. When a document is more than five years old and has not been reaffirmed, it is reasonable to conclude that its contents, although still of some value, do not wholly reflect the present state of the art. Users are cautioned to check to determine that they have the latest edition of any IEEE Standard.

Comments for revision of IEEE Standards are welcome from any interested party, regardless of membership affiliation with IEEE. Suggestions for changes in documents should be in the form of a proposed change of text, together with appropriate supporting comments.

Interpretations: Occasionally questions may arise regarding the meaning of portions of standards as they relate to specific applications. When the need for interpretations is brought to the attention of IEEE, the Institute will initiate action to prepare appropriate responses. Since IEEE Standards represent a consensus of all concerned interests, it is important to ensure that any interpretation has also received the concurrence of a balance of interests. For this reason, IEEE and the members of its societies and Standards Coordinating Committees are not able to provide an instant response to interpretation requests except in those cases where the matter has previously received formal consideration.

Comments on standards and requests for interpretations should be addressed to:

Secretary, IEEE-SA Standards Board
445 Hoes Lane
P.O. Box 1331
Piscataway, NJ 08855-1331
USA

Note: Attention is called to the possibility that implementation of this standard may require use of subject matter covered by patent rights. By publication of this standard, no position is taken with respect to the existence or validity of any patent rights in connection therewith. The IEEE shall not be responsible for identifying patents for which a license may be required by an IEEE standard or for conducting inquiries into the legal validity or scope of those patents that are brought to its attention.

Authorization to photocopy portions of any individual standard for internal or personal use is granted by the Institute of Electrical and Electronics Engineers, Inc., provided that the appropriate fee is paid to Copyright Clearance Center. To arrange for payment of licensing fee, please contact Copyright Clearance Center, Customer Service, 222 Rosewood Drive, Danvers, MA 01923 USA; (978) 750-8400. Permission to photocopy portions of any individual standard for educational classroom use can also be obtained through the Copyright Clearance Center.

Copyright The Institute of Electrical and Electronics Engineers, Inc.
Provided by IHS under license with IEEE
No reproduction or networking permitted without license from IHS
Not for Resale

Introduction

(This introduction is not part of IEEE Std C135.63-1998, IEEE Standard for Shoulder Live Line Extension Links for Overhead Line Construction.)

This standard covers the dimensional and strength requirements for shoulder live line extension links used for construction of overhead lines.

At the time this standard was completed, the Working Group on Pole Line Hardware had the following membership:

Ronald J. Oedemann, *Chair*

Nick Annas
James E. Applequist
Fred Burtleson
Rick Chapel
Bill Cundiff
Edward Dziedzic
Dale Easley
John Farrington
John Flynn
Donald Heald
Richard W. Hensel
Nunnally Johnson
Ralph O. Jones
Ed Kiernozek
David J. Koury
Keith Lindsey
Andy Meyer
Tom Murphy
Robert C. Peters
Patrick D. Quinn
Steve D. Scholfield
Richard J. Serocki
Chris Severs
Doug Sherman
Steve Smith
Ronald L. Spees
John Trostle
Nevins Wilburn

The following persons were on the balloting committee:

James E. Applequist
Joseph F. Buch
Kris K. Buckholz
W. H. Cole
Leonard F. Consalvo
William T. Croker
Glenn A. Davidson
Frank A. Denbrock
John Farrington
Lowell H. Fink
Geroge Gela
Donald Gillies
Edwin J. “Tip” Goodwin
Yang H. Hahm
Richard W. Hensel
Magdi F. Ishac
Ralph O. Jones
Robert O. Kluge
David J. Koury
Robert C. Latham
David J. Mitchell
Franklin D. Meyers
Ronald J. Oedemann
Robert C. Peters
J. L. Price
Patrick D. Quinn
John S. Rumble
Donald Sandell
Steve D. Scholfield
Richard J. Serocki
J. Larry Slentz
Ronald L. Spees
Richard B. Taylor
John Torok
Daniel J. Ward

When the IEEE-SA Standards Board approved this standard on 19 March 1998, it had the following membership:

Richard J. Holleman, *Chair* **Donald N. Heirman,** *Vice Chair*

Judith Gorman, *Secretary*

Satish K. Aggarwal
Clyde R. Camp
James T. Carlo
Gary R. Engmann
Harold E. Epstein
Jay Forster*
Thomas F. Garrity
Ruben D. Garzon
James H. Gurney
Jim D. Isaak
Lowell G. Johnson
Robert Kennelly
E. G. “Al” Kiener
Joseph L. Koepfinger*
Stephen R. Lambert
Jim Logothetis
Donald C. Loughry
L. Bruce McClung
Louis-François Pau
Ronald C. Petersen
Gerald H. Peterson
John B. Posey
Gary S. Robinson
Hans E. Weinrich
Donald W. Zipse

*Member Emeritus

Copyright © 1998 IEEE. All rights reserved.

Copyright The Institute of Electrical and Electronics Engineers, Inc.
Provided by IHS under license with IEEE
No reproduction or networking permitted without license from IHS
Not for Resale

Contents

1. Overview 1

1.1 Scope 1
1.2 Application 1

2. Material 1

3. Dimensions 1

4. Test procedure and test reports 3

4.1 Test procedure 3
4.2 Test reports 3

Copyright © 1998 IEEE. All rights reserved.
Copyright The Institute of Electrical and Electronics Engineers, Inc.
Provided by IHS under license with IEEE
No reproduction or networking permitted without license from IHS
Not for Resale

IEEE Standard for Shoulder Live Line Extension Links for Overhead Line Construction

1. Overview

1.1 Scope

This standard covers the dimensions and strength requirements for shoulder live line extension links used in overhead transmission and distribution hardware.

1.2 Application

Shoulder live line extension links conforming to the requirements of this standard shall in all respects meet the basic dimensional and performance requirements herein stated. Shoulder live line extension links are normally used at an attachment location for tools when changing out a string of suspension insulators. This work may be performed while the line is energized or de-energized.

2. Material

The shoulder live line extension links may be made of any material acceptable to the purchaser, subject only to the limitations imposed by specified dimensions and minimum strength requirements.

3. Dimensions

The dimensions in Figure 1 apply to the insulator end of the shoulder live line extension link. This end may be in the shape of a standard ball, socket, eye, clevis, or oval eye fitting, depending upon application. The dimensional requirements of Figure 1 shall be maintained.

Copyright © 1998 IEEE. All rights reserved.

Copyright The Institute of Electrical and Electronics Engineers, Inc.
Provided by IHS under license with IEEE
No reproduction or networking permitted without license from IHS
Not for Resale

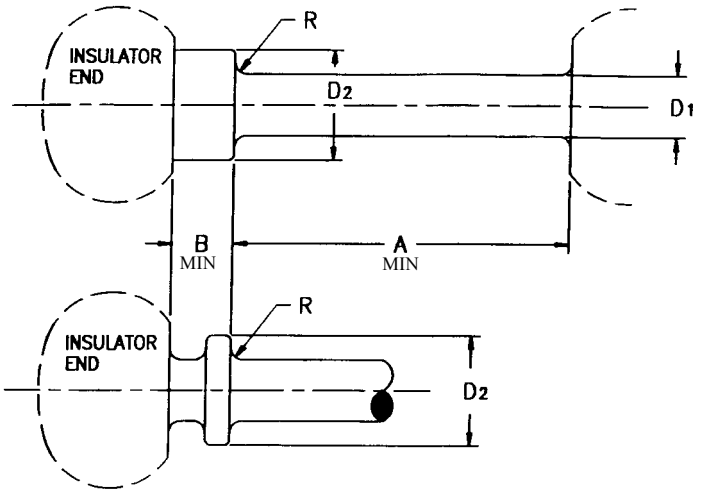

Metric measurements (mm)					
Type	**D1 normal ± 2**	**D2 max**	**A min**	**B min**	**R min**
1	22	39	133	16[a]	6
2	25	42	140	16[a]	8
3	29	51	140	16[a]	8
4	32	57	140	16[a]	8
English measurements (in)					
Type	**D1 normal ± 1/16**	**D2 max**	**A min**	**B min**	**R min**
1	7/8	1- 17/32	5-1/4	5/8[a]	1/4
2	1	1-21/32	5-1/2	5/8[a]	5/16
3	1-1/8	2	5-1/2	5/8[a]	5/16
4	1-1/4	2-1/4	5-1/2	5/8[a]	5/16

[a]For oval eye, clevis, and “Y” clevis the standard minimum “B” dimension is 6 mm (1/4 in). An optional minimum “B” dimension is 16 mm (5/8 in).

Figure 1—Dimensional requirements of shoulder live line extension link

Copyright © 1998 IEEE. All rights reserved.
Copyright The Institute of Electrical and Electronics Engineers, Inc.
Provided by IHS under license with IEEE
No reproduction or networking permitted without license from IHS
Not for Resale

4. Test procedure and test reports

The following design tests are meant to verify the adequacy of the design of the shoulder live line extension link when incorporated with any standard ball, socket, eye, clevis, or oval eye type fitting. These tests are not meant to be routine tests or to replace routine tests.

4.1 Test procedure

Five product samples of any one combination of shoulder and insulator end fittings that conform to this standard shall be subjected to the following test. Each test sample shall be held by the appropriate type of test fixture shown in Figure 2 and tested in the manner shown in Figure 3. The load shall be started at zero and smoothly brought up in a practically stepless variation to 75% of the full rated strength of the shoulder live line extension link [i.e., 101 kN (22 500 lbf) for a 135 kN (30 000 lbf) extension link]. Alternately, the load may be increased rapidly to approximately 50% of rated strength. The load from 50% to 75% of rated strength shall be applied at a rate of 25% of the rated strength per minute.

The shoulder live line extension link shall be held at 75% of rated strength for 3 min. The load shall then be released and the parts inspected. None of the five shoulder live line extension links shall fracture or shear. Local brinelling around the shoulder of the shoulder live line extension link from the test fixture is acceptable.

The five samples shall then be pulled to failure. The load shall be started at zero and brought up smoothly in a practically stepless manner. The load may be increased rapidly to approximately 75% of rated strength of hardware. The load shall then be applied smoothly at a rate of 25% of rated strength per minute until point of failure.

Failure of any sample at less than 95% of rated strength requires retest. Failure of more than one sample between 95% and 100% requires retest.

Retests shall be on 10 product samples with the same criteria as above. If the retest fails, the design fails.

4.2 Test reports

All tests shall be permanently recorded for a period of 10 years. Each test write-up shall contain the following:

— Date of test;
— Location of test;
— Catalog part number;
— Hardware rating;
— Description of test setup, including serial numbers of test equipment;
— Date of latest calibration of test equipment;
— Condition of item after 75% loading (e.g., “no permanent deformation noted,” “some brinelling,” etc.);
— Test results and any pertinent notes including description of failure, if any;
— Statement that the hardware does or does not meet the requirements of IEEE Std C135.63-1998; and
— Signature of inspector performing or witnessing the test.

Copyright © 1998 IEEE. All rights reserved.

Copyright The Institute of Electrical and Electronics Engineers, Inc.
Provided by IHS under license with IEEE
No reproduction or networking permitted without license from IHS Not for Resale

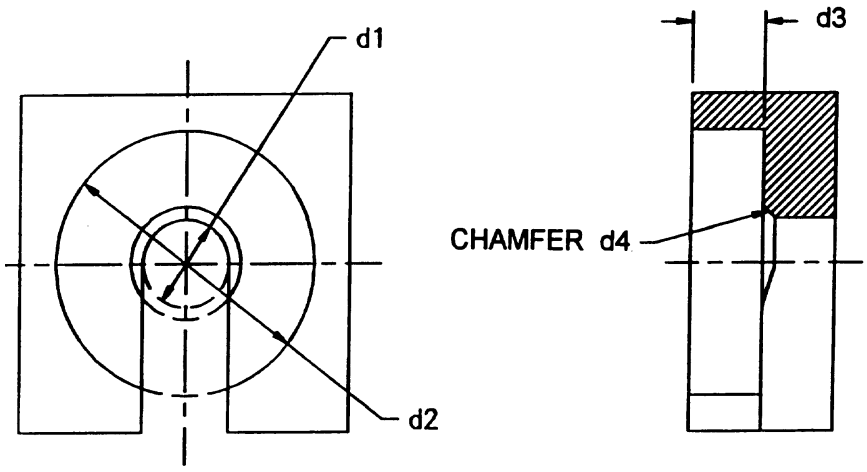

Metric measurements (mm)				
Type	**d1 +1 –0**	**d2 +1 –0**	**d3 +1 –1**	**d4 + –0**
1	25	41	6	2
2	29	44	6	2
3	32	54	6	2
4	35	60	6	2
English measurements (in)				
Type	**d1 +1/32 –0**	**d2 +1/32 –0**	**d3 +1/32 –1/32**	**d4 +1/32 –0**
1	1	1-5/8	7/32	1/16
2	1-1/8	1-3/4	7/32	1/16
3	1-1/4	2-1/8	7/32	1/16
4	1-1/4	2-3/8	7/32	1/16

Figure 2—Dimensional requirements of test fixture

Copyright © 1998 IEEE. All rights reserved.
Copyright The Institute of Electrical and Electronics Engineers, Inc.
Provided by IHS under license with IEEE
No reproduction or networking permitted without license from IHS
Not for Resale

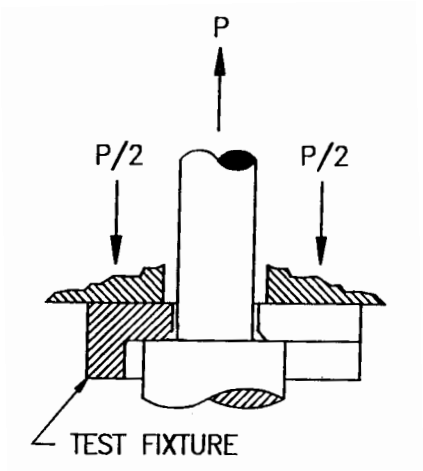

Figure 3—Example showing application of forces

Copyright © 1998 IEEE. All rights reserved.

Copyright The Institute of Electrical and Electronics Engineers, Inc.
Provided by IHS under license with IEEE
No reproduction or networking permitted without license from IHS
Not for Resale