IEEE Guide for Direct Lightning Stroke Shielding of Substations

Sponsor
Substations Committee
of the
IEEE Power Engineering Society

Reaffirmed 20 March 2002
IEEE-SA Standards Board

Approved 19 April 1996
IEEE Standards Board

Approved 11 September 1996
American National Standards Institute

Abstract: Design information for the methods historically and typically applied by substation designers to minimize direct lightning strokes to equipment and buswork within substations is provided. Two approaches, the classical empirical method and the electrogeometric model, are presented in detail. A third approach involving the use of active lightning terminals is also briefly reviewed.
Keywords: direct stroke shielding, lightning stroke protection, substations

---

The Institute of Electrical and Electronics Engineers, Inc.

345 East 47th Street, New York, NY 10017-2394

Copyright © 1996 by the Institute of Electrical and Electronics Engineers, Inc.

All rights reserved. Published 1996. Printed in the United States of America.

ISBN 1-55937-768-2

No part of this publication may be reproduced in any form, in an electronic retrieval or otherwise, without the prior written permission of the publisher.

Copyright The Institute of Electrical and Electronics Engineers, Inc.
Provided by IHS under license with IEEE
No reproduction or networking permitted without license from IHS
Not for Resale

IEEE Standards documents are developed within the IEEE Societies and the Standards Coordinating Committees of the IEEE Standards Board. Members of the committees serve voluntarily and without compensation. They are not necessarily members of the Institute. The standards developed within IEEE represent a consensus of the broad expertise on the subject within the Institute as well as those activities outside of IEEE that have expressed an interest in participating in the development of the standard.

Use of an IEEE Standard is wholly voluntary. The existence of an IEEE Standard does not imply that there are no other ways to produce, test, measure, purchase, market, or provide other goods and services related to the scope of the IEEE Standard. Furthermore, the viewpoint expressed at the time a standard is approved and issued is subject to change brought about through developments in the state of the art and comments received from users of the standard. Every IEEE Standard is subjected to review at least every five years for revision or reaffirmation. When a document is more than five years old and has not been reaffirmed, it is reasonable to conclude that its contents, although still of some value, do not wholly reflect the present state of the art. Users are cautioned to check to determine that they have the latest edition of any IEEE Standard.

Comments for revision of IEEE Standards are welcome from any interested party, regardless of membership affiliation with IEEE. Suggestions for changes in documents should be in the form of a proposed change of text, together with appropriate supporting comments.

Interpretations: Occasionally questions may arise regarding the meaning of portions of standards as they relate to specific applications. When the need for interpretations is brought to the attention of IEEE, the Institute will initiate action to prepare appropriate responses. Since IEEE Standards represent a consensus of all concerned interests, it is important to ensure that any interpretation has also received the concurrence of a balance of interests. For this reason, IEEE and the members of its societies and Standards Coordinating Committees are not able to provide an instant response to interpretation requests except in those cases where the matter has previously received formal consideration.

Comments on standards and requests for interpretations should be addressed to:

Secretary, IEEE Standards Board
445 Hoes Lane
P.O. Box 1331
Piscataway, NJ 08855-1331
USA

NOTE — Attention is called to the possibility that implementation of this standard may require use of subject matter covered by patent rights. By publication of this standard, no position is taken with respect to the existence or validity of any patent rights in connection therewith. The IEEE shall not be responsible for identifying all patents for which a license may be required by an IEEE standard or for conducting inquiries into the legal validity or scope of those patents that are brought to its attention,

Authorization to photocopy portions of any individual standard for internal or personal use is granted by the Institute of Electrical and Electronics Engineers, Inc., provided that the appropriate fee is paid to Copyright Clearance Center. To arrange for payment of licensing fee, please contact Copyright Clearance Center, Customer Service, 222 Rosewood Drive, Danvers, MA 01923 USA; (508) 750-8400. Permission to photocopy portions of any individual standard for educational classroom use can also be obtained through the Copyright Clearance Center.

Copyright The Institute of Electrical and Electronics Engineers, Inc.
Provided by IHS under license with IEEE
No reproduction or networking permitted without license from IHS
Not for Resale

Introduction

[This introduction is not part of IEEE Std 998-1996, IEEE Guide for Direct Lightning Stroke Shielding of Substations (ANSI).]

This guide was prepared by the Direct Stroke Shielding of Substations Working Group of the Substations Committee, Transmission Substations Subcommittee. Work on this guide began in 1973 and many former members made contributions towards its completion. The membership of the working group during the preparation of this draft was as follows:

R. J. Wehling, *Chair*
Nelson Barbeito, *Vice Chair*
John R. Clayton, *Secretary*

Hanna E. Abdallah
P. Chowdhuri
Steve L. Duong
Dennis R. Falkenheim
George Flaig
Dave L. Goetz
William A. Griego
Richard J. Hellweg
Abdul M. Mousa
Robert S. Nowell
J. Ted Orrell
Jan Panek
R. J. Perina
Don Rogers
Pankaj K. Sen
Frank C. Shainauskas
W. Keith Switzer
Edgar R. Taylor
Aung Thaik

Former working group members who made significant contributions towards development of the guide were as follows:

Gary D. Behrens
Ivan B. Clevenger
George W. Crouch
William H. Dainwood
Frank J. Jaskowiak
A. P. (Paul) Johnson
Zlatko Kapelina
Frank F. Kluge

Copyright The Institute of Electrical and Electronics Engineers, Inc.
Provided by IHS under license with IEEE
No reproduction or networking permitted without license from IHS
Not for Resale

The following persons were on the balloting committee:

William J. Ackerman
S. J. Arnot
A. C. Baker
Nelson Barbeito
G.J. Bartok
Burhan Becer
Kevin M. Bevins
Michael J. Bio
Kenneth L. Black
Charles Blattner
W.R. Block
Steven A. Boggs
Philip C. Bolin
Steven D. Brown
James C. Burke
John B. Cannon
Daniel Charbonnet
Frank Y. Chu
D.Mason Clark
J. R. Clayton
Robert Corlew
Richard Cottrell
Eugene F. Counsel
William Daily
Frank A. Denbrock
Clifford C. Diemond
W. Bruce Dietzman
Terry Doern
Claude Durand
Gary R. Engmann
James W. Evans
Ron J. Farquharson
Lenard N. Ferguson
David Lane Garrett
Floyd W. Greenway
John Grzan
David L. Harris
R.J. Hellweg
John E. Holladay
Mike L. Holm
Kenneth Jackson
Zlatko Kapelina
Richard P. Keil
Alan E. Kollar
T. L. Krummrey
Luther W. Kurtz
Donald N. Laird
Lawrence M. Laskowski
Alfred A. Leibold
C.T. Lindeberg
H. Peter Lips
Rusko Matulic
John D. McDonald
Thomas S. McLenahan
A. P. Sakis Meliopoulos
Abdul M. Mousa
Philip R. Nannery
R. S. Nowell
Edward V. Olavarria
J. Ted Orrell
James S. Oswald
Shashi G. Patel
Raymond J. Perina
K. Pettersson
Walter Prystajecky
J. F. Quinata
B. Don Russell
Jakob Sabath
Samuel C. Sciacca
F. C. Shainauskas
June Singletary
Lee H. Smith
Robert C. Sodergren
Bodo Sojka
Robert C. St. Clair
Robert P. Stewart
W. Keith Switzer
Stanley R. Sykes
John T. Tengdin
Hemchand Thakar
Charles F. Todd
Duane R. Torgerson
L. F. Volf
R. J. Wehling
W. M. Werner
Bahman Yamin-Afshar

Copyright The Institute of Electrical and Electronics Engineers, Inc.
Provided by IHS under license with IEEE
No reproduction or networking permitted without license from IHS
Not for Resale

The final conditions for approval of this standard were met on 19 April 1996. This standard was conditionally approved by the IEEE Standards Board on 14 March 1996, with the following membership:

Donald C. Loughry, *Chair*
Richard J. Holleman, *Vice Chair*
Andrew G. Salem, *Secretary*

Gilles A. Baril	E. G. "Al" Kiener	Arthur K. Reilly
Clyde R. Camp	Joseph L. Koepfinger*	Ronald H. Reimer
Joseph A. Cannatelli	Stephen R. Lambert	Gary S. Robinson
Stephen L. Diamond	Lawrence V. McCall	Ingo Rüsch
Harold E. Epstein	L. Bruce McClung	John S. Ryan
Donald C. Fleckenstein	Marco W. Migliaro	Chee Kiow Tan
Jay Forster*	Mary Lou Padgett	Leonard L. Tripp
Donald N. Heirman	John W. Pope	Howard L. Wolfman
Ben C. Johnson	Jose R. Ramos	

*Member Emeritus

Also included are the following nonvoting IEEE Standards Board liaisons:

Satish K. Aggarwal	Alan H. Cookson	Chester C. Taylor

Kristin M. Dittmann
IEEE Standards Project Editor

Copyright The Institute of Electrical and Electronics Engineers, Inc.
Provided by IHS under license with IEEE
No reproduction or networking permitted without license from IHS
Not for Resale

PAGE

1. Overview 1

1.1 Scope 1
1.2 Purpose 1
1.3 Definitions 2

2. Lightning stroke phenomena 3

2.1 Charge formation in clouds 3
2.2 Stroke formation 4
2.3 Strike distance 5
2.4 Stroke current magnitude 8
2.5 Keraunic level 9
2.6 Ground flash density 9
2.7 Lightning detection networks 11

3. The design problem 12

4. Empirical design methods 13

4.1 Fixed angles 14
4.2 Origin of empirical curves 15
4.3 Application of empirical curves 18

5. The electrogeometric model (EGM) 21

5.1 History 21
5.2 A revised EGM 23
5.3 Application of the EGM4 by the rolling sphere method 31
5.4 Application of revised EGM by Mousa and Srivastava method 39
5.5 Calculation of failure probability 42

6. Active lightning terminals 42

7. Bibliography 43

Annex A (Informative) Empirical shielding curves 49

Annex B (Informative) Sample calculations 53

Annex C (Informative) Calculation of corona radius and surge impedance under corona 125

Annex D (Informative) Calculation of failure probability 128

Annex E (Informative) IEEE questionnaire—1991 130

Annex F (Informative) The Dainwood method 147

Annex G (Informative) Direct lightning stroke protection 148

Copyright The Institute of Electrical and Electronics Engineers, Inc.
Provided by IHS under license with IEEE
No reproduction or networking permitted without license from IHS
Not for Resale

IEEE Guide for Direct Lightning Stroke Shielding of Substations

1. Overview

1.1 Scope

The scope of this guide is the identification and discussion of design procedures to provide direct stroke shielding of outdoor distribution, transmission, and generating plant substations. All known methods of shielding from direct strokes were investigated during the preparation of this guide, and information is provided on two methods found to be widely used:

a) The classical empirical method
b) The electrogeometric model

A third approach, which involves the use of active lightning terminals, is briefly reviewed in clause 6.

This guide does not purport to include all shielding methods that may have been developed. The guide also does not address protection from surges entering a substation over power or communication lines or the personnel safety issues.

Users of this guide should thoroughly acquaint themselves with all factors that relate to the design of a particular installation and use good engineering judgment in the application of the methods given here, particularly with respect to the importance and value of the equipment being protected.

1.2 Purpose

The intent of this guide is to provide design information for the methods historically and typically applied by substation designers to minimize direct lightning strokes to equipment and buswork within substations. The general nature of lightning is discussed in clause 2 and the problems associated with providing protection from direct strikes are described in clause 3. The methods reviewed in this guide for designing a system of protection are explained in clauses 4 and 5, and sample calculations are given in annex B to illustrate use of the methods. Clause 7 contains an extensive bibliography for further study of the subject.

--`,,`-`-`,,`,,`,`,,`---

Copyright The Institute of Electrical and Electronics Engineers, Inc.
Provided by IHS under license with IEEE
No reproduction or networking permitted without license from IHS
Not for Resale

1.3 Definitions

The definitions of terms contained in this document are not intended to embrace all legitimate meanings of the terms. They may only be applicable to the subject treated in this document. For additional definitions refer to IEEE Std 100-1992 [B44] [1].

1.3.1 critical stroke amplitude: The amplitude of the current of the lightning stroke that, upon terminating on the phase conductor, would raise the voltage of the conductor to a level at which flashover is likely.

1.3.2 dart leader: The downward leader of a subsequent stroke of a multiple-stroke lightning flash.

1.3.3 effective shielding: That which permits lightning strokes no greater than those of critical amplitude (less design margin) to reach phase conductors.

1.3.4 electrogeometric model (EGM): A geometrical representation of a facility, that, together with suitable analytical expressions correlating its dimensions to the current of the lightning stroke, is capable of predicting if a lightning stroke will terminate on the shielding system, the earth, or the element of the facility being protected.

1.3.5 electrogeometric model theory: The theory describing the electrogeometric model together with the related quantitative analyses including the correlation between the striking distances to the different elements of the model and the amplitude of the first return stroke.

1.3.6 ground flash density (GFD): The average number of lightning strokes per unit area per unit time at a particular location.

1.3.7 isokeraunic lines: Lines on a map connecting points having the same keraunic level.

1.3.8 keraunic level: The average annual number of thunderstorm days or hours for a given locality. (1) A daily keraunic level is called a thunderstorm-day and is the average number of days per year in which thunder is heard during a 24 h period. (2) An hourly keraunic level is called a thunderstorm-hour and is the average number of hours per year that thunder is heard during a 60 min period.

1.3.9 lightning flash: The complete lightning discharge, most often composed of leaders from a cloud followed by one or more return strokes.

1.3.10 lightning mast: A column or narrow-base structure containing a vertical conductor from its tip to earth, or that is itself a suitable conductor to earth. Its purpose is to intercept lightning strokes so that they do not terminate on objects located within its zone of protection.

1.3.11 negative shielding angle: The shielding angle formed when the shield wire is located beyond the area occupied by the outermost conductors. *See also:* **shielding angle, positive shielding angle.**

1.3.12 positive shielding angle: The shielding angle formed when the shield wire is located above and inside of the area occupied by the outermost conductors. *See also:* **shielding angle, negative shielding angle.**

1.3.13 rolling sphere method: A simplified technique for applying the electrogeometric theory to the shielding of substations. The technique involves rolling an imaginary sphere of prescribed radius over the surface of a substation. The sphere rolls up and over (and is supported by) lightning masts, shield wires, fences, and other grounded metal objects intended for lightning shielding. A piece of equipment is protected from a direct stroke if it remains below the curved surface of the sphere by virtue of the sphere being elevated by shield wires or other devices. Equipment that touches the sphere or penetrates its surface is not protected.

1.3.14 shielding angle (1) (of shield wires with respect to conductors): The angle formed by the intersection of a vertical line drawn through a shield wire and a line drawn from the shield wire to a protected conductor. The angle is chosen to provide a zone of protection for the conductor so that most lightning strokes will terminate on the shield wire rather than on the conductor.

(2) (of a lightning mast): The angle formed by the intersection of a vertical line drawn through the tip of the mast and another line drawn through the tip to earth at some selected angle with the vertical. Rotation of this angle around the

[1]The numbers in brackets correspond to those of the bibliography in clause 7.

Copyright © 1996 IEEE All Rights Reserved

Copyright The Institute of Electrical and Electronics Engineers, Inc.
Provided by IHS under license with IEEE
No reproduction or networking permitted without license from IHS Not for Resale

structure forms a cone-shaped zone of protection for objects located within the cone. The angle is chosen so that lightning strokes will terminate on the mast rather than on an object contained within the protective zone so formed. *See also:* **positive and negative shielding angle.**

1.3.15 shield wire (overhead power line or substation): A wire suspended above the phase conductors positioned with the intention of having lightning strike it instead of the phase conductor(s). *Synonyms:* **overhead ground wire (OHGW), static wire,** and **sky wire.**

1.3.16 stepped leader: Static discharge that propagates from a cloud into the air. Current magnitudes that are associated with stepped leaders are small (on the order of 100 A) in comparison with the final stroke current. The stepped leaders progress in a random direction in discrete steps from 10 to 80 m in length. Their most frequent velocity of propagation is about 0.05% of the speed of light, or approximately 500 000 ft/s (150 000 m/s). It is not until the stepped leader is within striking distance of the point to be struck that the stepped leader is positively directed toward this point.

1.3.17 striking distance: The length of the final jump of the stepped leader as its potential exceeds the breakdown resistance of this last gap; found to be related to the amplitude of the first return stroke.

1.3.18 surge impedance: The ratio between voltage and current of a wave that travels on a conductor.

1.3.19 thunder: The sound that follows a flash of lightning and is caused by the sudden expansion of the air in the path of electrical discharge.

1.3.20 thunderstorm day: A day on which thunder can be heard, and hence when lightning occurs.

1.3.21 thunderstorm hour: An hour during which thunder can be heard, and hence when lightning occurs.

2. Lightning stroke phenomena

2.1 Charge formation in clouds

Numerous theories have been advanced regarding the formation of charge centers, charge separation within a cloud, and the ultimate development of lightning strokes. One theory attributes charge separation to the existence of both positive and negative ions in the air and the existence of a normal electric field directed toward the earth. Large drops of water in the electric field are polarized, the upper sides acquiring a negative charge and the lower sides a positive charge. As the polarized drops of water fall due to gravity, the undersides (positive sides) attract negative ions, while no such action occurs at the upper surfaces. As a result of this action, the drops accumulate negative charge. Thus, the original charges, which were distributed at random and produced an essentially neutral space charge, become separated. The large drops of water carry the negative charges to the lower portion of the cloud, causing the lower portion to be negatively charged and the upper portion to be positively charged. Another theory is that the interaction of ascending wind currents in the leading head of a cloud breaks up the water droplets causing the resulting droplets to be positively charged and the air to be negatively charged. The positively charged water droplets are unable to fall through the ascending wind currents at the head of the cloud, which causes this portion of the cloud to be positively charged while the remaining larger portion becomes negatively charged. Yet another theory suggests that there are regions of subzero temperature within a cloud and the subsequent formation of ice crystals is an essential factor in the explanation of the charge centers within clouds. (These three theories are presented in [B95].)

It has even been suggested that perhaps all of the physical phenomena postulated in the various theories may occur, At best, the processes occurring within a cloud formation that cause charge separation are complicated. The important fact to the designing engineer is that a charge separation does occur in thunderstorm clouds. Experiments using balloons equipped with electric gradient measuring equipment have been performed to investigate typical charge distribution in thunderclouds, and these experiments have shown that, in general, the main body of a thundercloud is negatively charged and the upper part positively charged [B95]. A concentration of positive charge also frequently exists in the base of the cloud. Such charge distribution in a cloud causes an accumulation of charge of the opposite polarity on the earth's surface and on objects (e.g., trees, buildings, electric power lines, structures, etc.) beneath the

Copyright © 1996 IEEE All Rights Reserved

Copyright The Institute of Electrical and Electronics Engineers, Inc.
Provided by IHS under license with IEEE
No reproduction or networking permitted without license from IHS Not for Resale

cloud. A typical charged cloud and the resulting electric fields are shown in figure 2-1. (Note that the plot in figure 2-1 is of the electric gradient as the cloud moves over the ground, not the amount of charge below the cloud.) The electric fields shown in figure 2-1 have been verified by data obtained from ground gradient measuring equipment during the passage of storm clouds [B30].

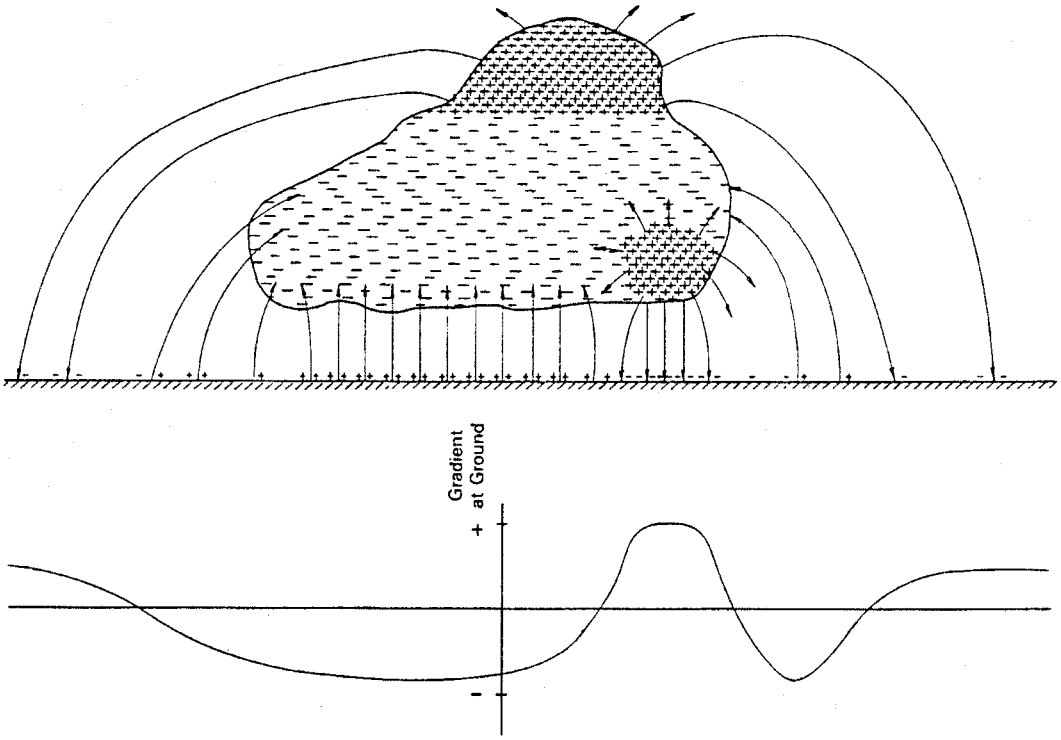

Permission to use granted by Black & Vearch.
Originally presented at EEI Electrical System and
Equipment Committee Meeting, October 25, 1988.

Source: [B74].

Figure 2-1—Charged cloud and resulting electric fields

The electrical charge concentrations within a cloud are constrained to the size of the cloud. The cloud size, in relation to the earth, is small. Therefore, the electrical gradient that exists in the cloud is much greater than at the earth. Because of this, an electrical discharge tends to be initiated at the cloud rather than at the ground.

2.2 Stroke formation

2.2.1 Types of strokes

There are a number of different types of lightning strokes. These include strokes within clouds, strokes between separate clouds, strokes to tall structures, and strokes that terminate on the ground. The positive and negative strokes terminating on the ground are the types of most interest in designing shielding systems and the following discussion will be confined to those types.

Copyright © 1996 IEEE All Rights Reserved

Copyright The Institute of Electrical and Electronics Engineers, Inc.
Provided by IHS under license with IEEE
No reproduction or networking permitted without license from IHS Not for Resale

2.2.2 Stepped leaders

The actual stroke development occurs in a two-step process. The first step is ionization of the air surrounding the charge center and the development of *stepped leaders*, which propagate charge from the cloud into the air. Current magnitudes associated with stepped leaders are small (in the order of 100 A) in comparison with the final stroke current [B95]. The stepped leaders progress in a random direction in discrete steps from 10 to 80 m in length. Their most frequent velocity of propagation is about 0.05% the speed of light, or approximately 500 000 ft/s (150 000 m/s) [B4]. It is not until the stepped leader is within striking distance of the point to be struck that the leader is positively diverted toward this point. *Striking distance* is the length of the last step of leader under the influence of attraction toward the point of opposite polarity to be struck.

2.2.3 Return stroke

The second step in the development of a lightning stroke is the *return stroke*. The return stroke is the extremely bright streamer that propagates upward from the earth to the cloud following the same path as the main channel of the downward stepped leader. This return stroke is the actual flow of stroke current that has a median value of about 24 000 A and is actually the flow of charge from earth to cloud to neutralize the charge center [B70]. The velocity of the return stroke propagation is about 10% the speed of light, or approximately $100 \cdot 10^6$ ft/s ($30 \cdot 10^6$ m/s) [B95].

The amount of charge (usually negative)descending to the earth from the cloud is equal to the charge (usually positive) that flows upward from the earth. Since the propagation velocity of the return stroke is so much greater than the propagation velocity of the stepped leader, the return stroke exhibits a much larger current flow (rate of charge movement). The various stages of a stroke development are shown in figure 2-2, Approximately 55% of all lightning flashes consist of multiple strokes that traverse the same path formed by the initial stroke. The leaders of subsequent strokes have a propagation velocity much greater than that of the initial stroke (approximately 3% the speed of light) and is referenced as a *dart leader* [B95].

2.3 Strike distance

Return stroke current magnitude and strike distance (length of the last stepped leader) are interrelated. A number of equations have been proposed for determining the striking distance. The principal ones are as follows:

$$S = 2I + 30\ (1 - e^{-I/6.8}) \qquad \text{Darveniza [B26]} \tag{2-1A}$$

$$S = 10\, I^{0.65} \qquad \text{Love [B4, 46a]} \tag{2-1B}$$

$$S = 9.4\, I^{2/3} \qquad \text{Whitehead [B98]} \tag{2-1C}$$

Copyright © 1996 IEEE All Rights Reserved

Copyright The Institute of Electrical and Electronics Engineers, Inc.
Provided by IHS under license with IEEE
No reproduction or networking permitted without license from IHS
Not for Resale

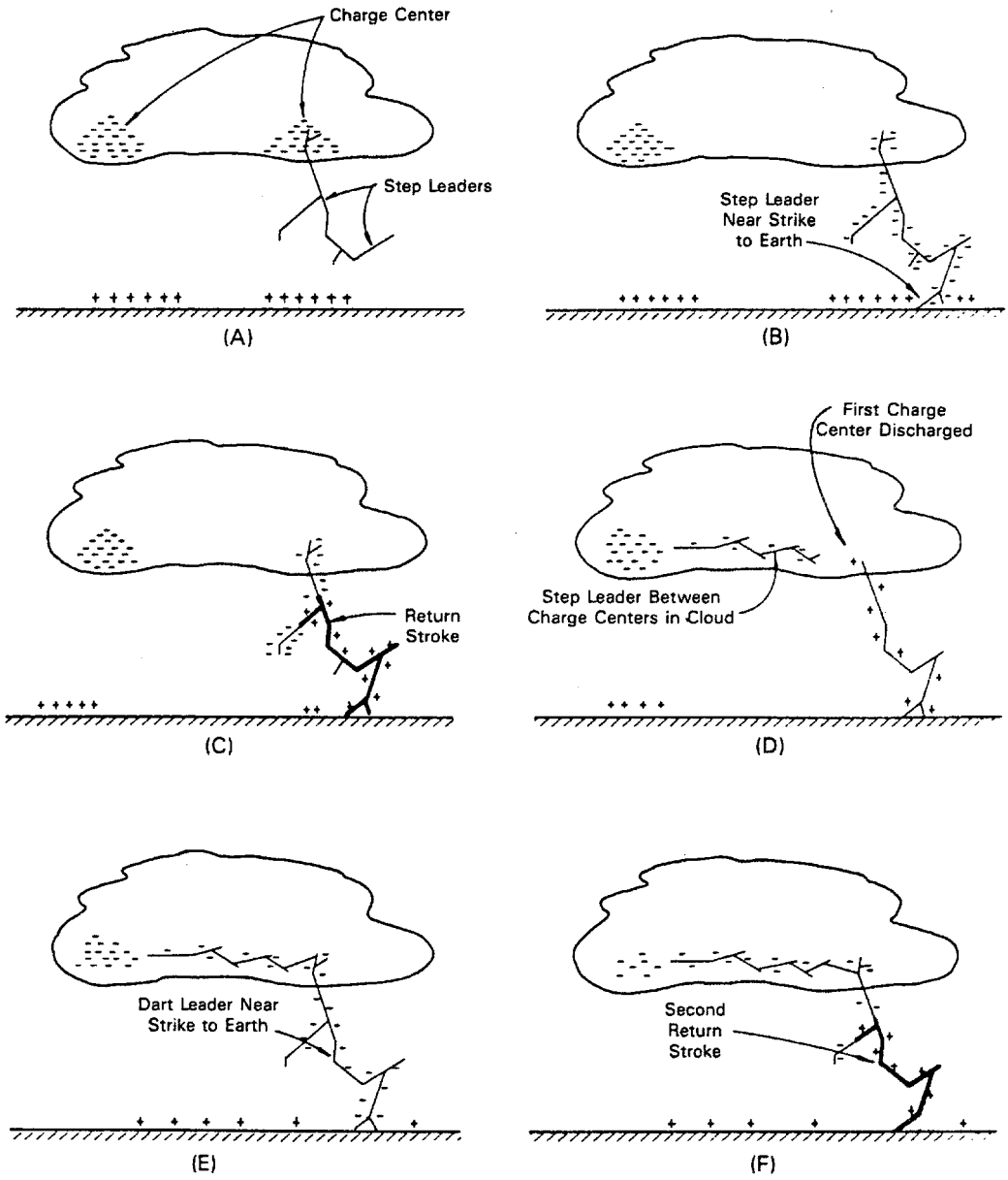

Adapted from: *Electrical Transmission and Distribution Reference Book,* by Central Station Engineers of the Westinghouse Electric Corporation, East Pittsburgh, Pennsylvania, Fourth Edition, 1964.

Figure 2-2 —Charge distribution at various stages of lightning discharge

Copyright © 1996 IEEE All Rights Reserved

Copyright The Institute of Electrical and Electronics Engineers, Inc.
Provided by IHS under license with IEEE
No reproduction or networking permitted without license from IHS Not for Resale

$$S = 8\,I^{0.65} \quad \text{IEEE [B46]} \tag{2-1D}$$

$$S = 3.3\,I^{0.78} \quad \text{Suzuki [B89]} \tag{2-1E}$$

where

S is the strike distance in meters
I is the return stroke current in kiloamperes

It may be disconcerting to note that the above equations vary by as much as a factor of 2:1. However, lightning investigators now tend to favor the shorter strike distances given by Eq 2-1D. J. G. Anderson, for example, who adopted Eq 2-1B in the 1975 edition of the *Transmission Line Reference Book* [B4], now feels that Eq 2-1D is more accurate. Mousa [B67] also supports this form of the equation.

Equation 2-1D has been adopted for this guide. The equation may also be stated as follows:

$$I = 0.041\,S^{1.54} \tag{2-1F}$$

This relationship is shown graphically in figure 2-3. From this point on, the return stroke current will be referenced in this guide as the *stroke current*.

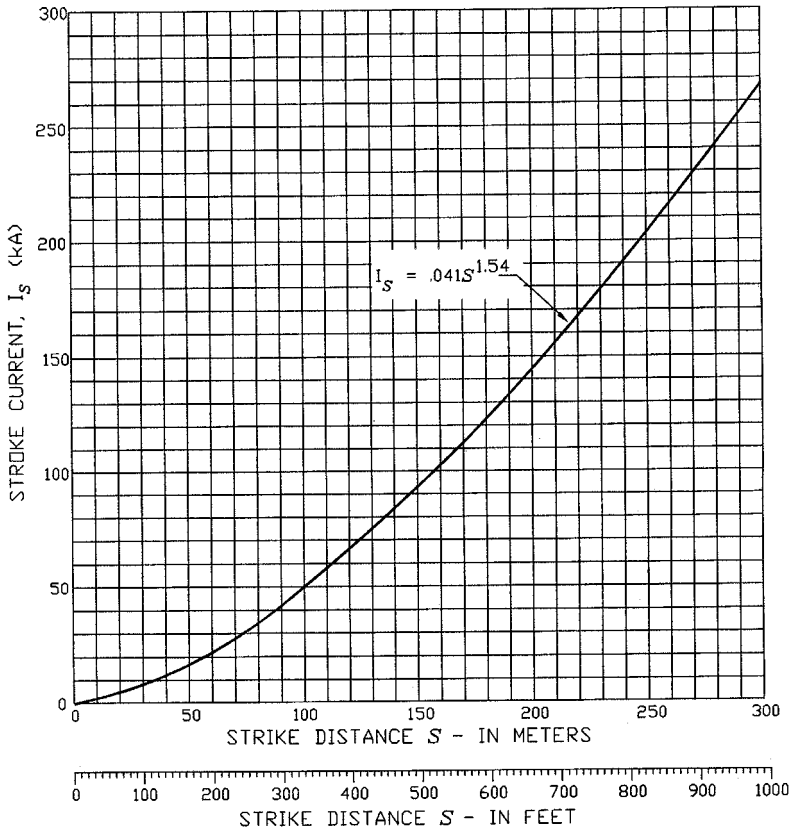

Figure 2-3 —Strike distance vs. stroke current

Copyright © 1996 IEEE All Rights Reserved

Copyright The Institute of Electrical and Electronics Engineers, Inc.
Provided by IHS under license with IEEE
No reproduction or networking permitted without license from IHS
Not for Resale

2.4 Stroke current magnitude

Since the stroke current and striking distance are related, it is of interest to know the distribution of stroke current magnitudes. The median value of strokes to OHGW, conductors, structures, and masts is usually taken to be 31 kA [B4]. Anderson [B4] gave the probability that a certain peak current will be exceeded in any stroke as follows:

$$P(I) = \frac{1}{1 + \left(\frac{I}{31}\right)^{2.6}} \tag{2-2A}$$

where

P(I) is the probability that the peak current in any stroke will exceed *I*
I is the specified crest current of the stroke in kiloamperes

Mousa [B70] has shown that a median stroke current of 24 kA for strokes to flat ground produces the best correlation with available field observations to date. Using this median value of stroke current, the probability that a certain peak current will be exceeded in any stroke is given by the following equation:

$$P(I) = \frac{1}{1 + \left(\frac{I}{24}\right)^{2.6}} \tag{2-2B}$$

where the symbols have the same meaning as above.

Figure 2-4 is a plot of Eq 2-2B, and figure 2-5 is a plot of the probability that a stroke will be within the ranges shown on the abscissa.

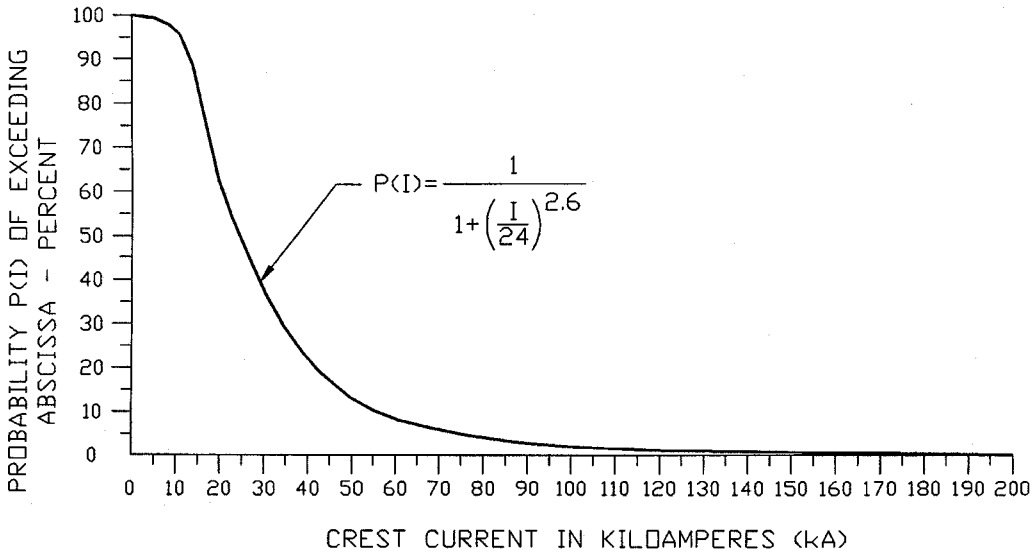

Figure 2-4 —Probability of stroke current exceeding abscissa for strokes to flat ground

Copyright © 1996 IEEE All Rights Reserved

Copyright The Institute of Electrical and Electronics Engineers, Inc.
Provided by IHS under license with IEEE
No reproduction or networking permitted without license from IHS Not for Resale

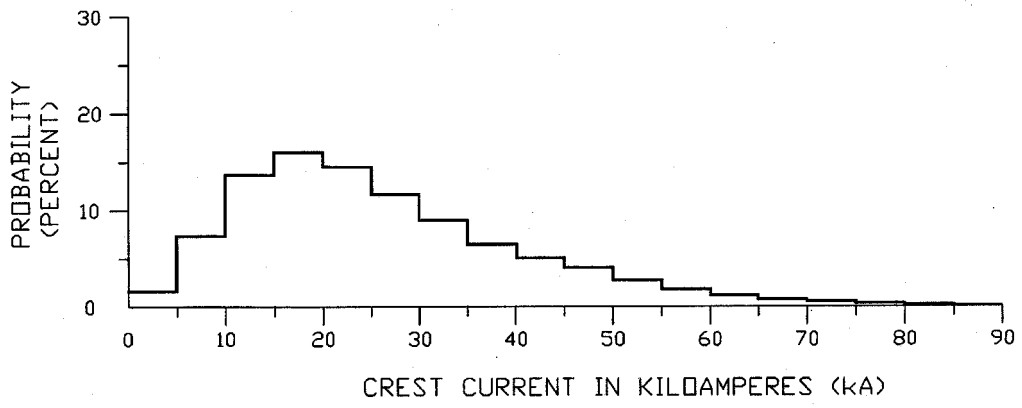

Figure 2-5 —Stroke current range probability for strokes to flat ground

2.5 Keraunic level

Keraunic level is defined as the average annual number of thunderstorm days or hours for a given locality. A daily keraunic level is called a thunderstorm-day and is the average number of days per year on which thunder will be heard during a 24 h period. By this definition, it makes no difference how many times thunder is heard during a 24 h period. In other words, if thunder is heard on any one day more than one time, the day is still classified as one thunder-day (or thunderstorm day).

The National Oceanic and Atmospheric Administration (NOAA) now keeps hourly thunderstorm records. An hourly keraunic level is called a thunderstorm-hour and is the average number of hours per year on which thunder will be heard during a 60 min period. In other words, if thunder is heard on any one hour more than one time, the hour is still classified as one thunder-hour (or thunderstorm hour). This provides a more accurate picture of the lightning density in a given area.

The average annual keraunic level for locations in the United States can be determined by referring to isokeraunic maps on which lines of equal keraunic level are plotted on a map of the country. Figures 2-6, 2-7, and 2-8 give the mean annual thunderstorm days for the U.S., Canada, and the world based on thunderstorm days. Figure 2-9 gives the keraunic level for the U.S. based on thunderstorm-hours. This latter data was prepared by MacGorman, Maier, and Rust for the Nuclear Regulatory Commission (NRC) under the auspices of NOAA [B54]. Combined thunderstorm-hour data for the U.S. and Canada can also be found in Figure II of [B46a].

2.6 Ground flash density

Ground flash density (GFD) is defined as the average number of strokes per unit area per unit time at a particular location. It is usually assumed that the GFD to earth, a substation, or a transmission or distribution line is roughly proportional to the keraunic level at the locality. Table 2-1, taken from [B4], gives various equations for GFD as developed by various researchers around the world. These researchers arrived at a proportional relationship ranging from $0.1T$ to $0.19T$ ground flashes per square kilometer per year, where T is the average annual keraunic level. If thunderstorm days are to be used as a basis, it is suggested that the following equation be used [B4]:

$$N_k = 0.12\ T_d \qquad \text{(2-3A)}$$

Copyright © 1996 IEEE All Rights Reserved

Copyright The Institute of Electrical and Electronics Engineers, Inc.
Provided by IHS under license with IEEE
No reproduction or networking permitted without license from IHS
Not for Resale

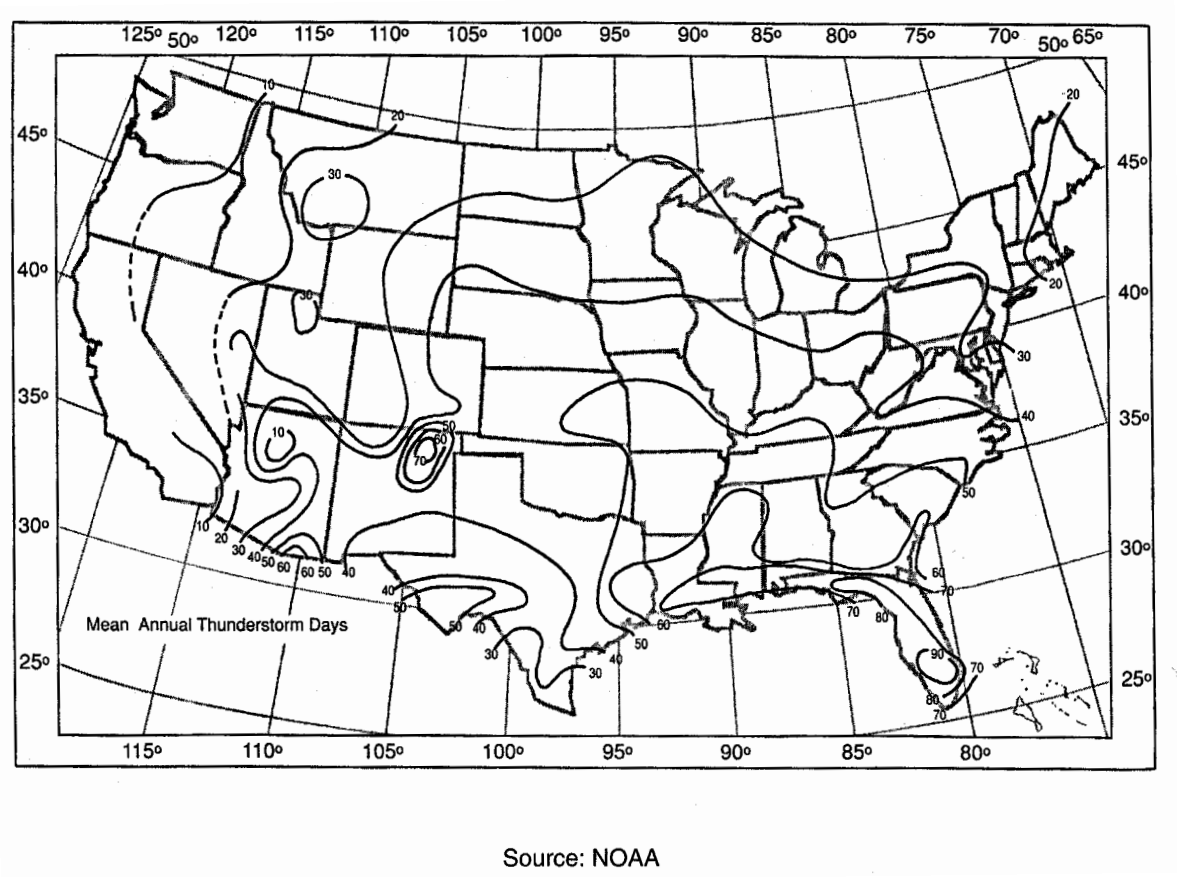

Figure 2-6 —Mean annual thunderstorm days—U.S.

or

$$N_m = 0.31\, T_d \tag{2-3B}$$

where

N_k is the number of flashes to earth per square kilometer per year
N_m is the number of flashes to earth per square mile per year
T_d is the average annual keraunic level, thunderstorm days

If thunderstorm hours is to be used as a basis, the following formula by MacGorman, et al. [B54] is recommended.

$$N_k = 0.054\, T_h^{1.1} \tag{2-4A}$$

or

$$N_m = 0.14\, T_h^{1.1} \tag{2-4B}$$

Copyright © 1996 IEEE All Rights Reserved

Copyright The Institute of Electrical and Electronics Engineers, Inc.
Provided by IHS under license with IEEE
No reproduction or networking permitted without license from IHS Not for Resale

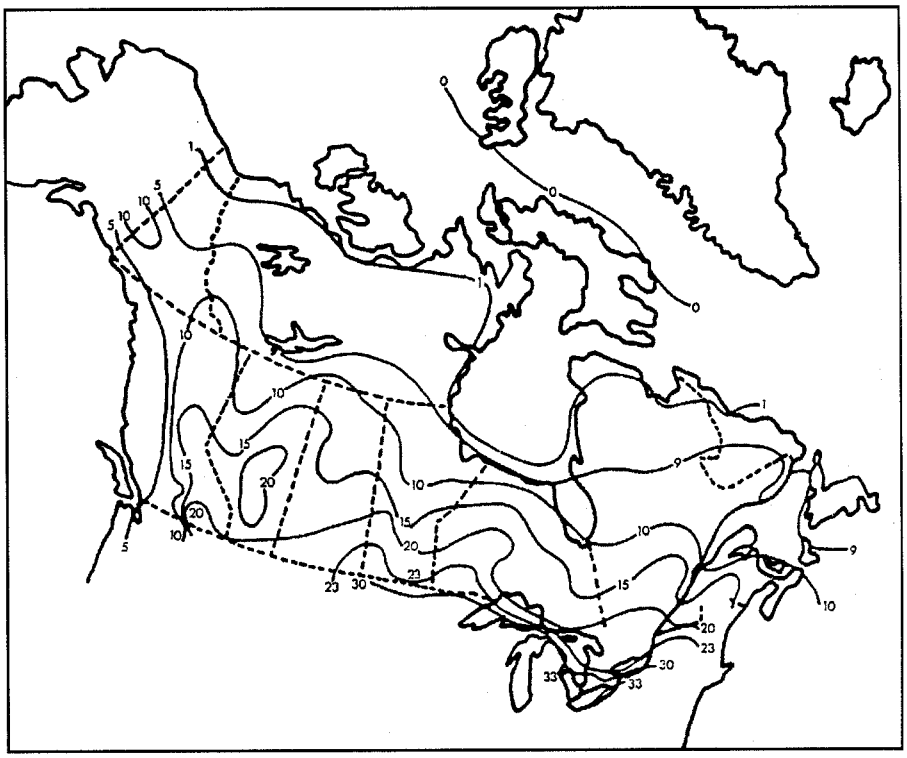

Source: Data from Meterological Division, Department of Transportation, Canada

Figure 2-7 —Mean annual thunderstorm days—Canada

where

T_h is the average annual keraunic level, thunderstorm hours

The resulting ground flash density using Eq 2-4A is shown in figure 2-10.

2.7 Lightning detection networks

A new technology is now being deployed in Canada and the U.S. that promises to provide more accurate information about ground flash density and lightning stroke characteristics. Mapping of lightning flashes to the earth has been in progress for over a decade in Europe, Africa, Australia, and Asia. Now a network of direction finding receiving stations has been installed across Canada and the U.S. By means of triangulation among the stations, and with computer processing of signals, it is possible to pinpoint the location of each lightning discharge. Hundreds of millions of strokes have been detected and plotted to date.

Ground flash density maps have already been prepared from this data, but with the variability in frequency and paths taken by thunderstorms from year to year, it will take a number of years to develop data that is statistically significant. Some electric utilities are, however, taking advantage of this technology to detect the approach of thunderstorms and to plot the location of strikes on their system. This information is very useful for dispatching crews to trouble spots and can result in shorter outages that result from lightning strikes.

Copyright © 1996 IEEE All Rights Reserved

Copyright The Institute of Electrical and Electronics Engineers, Inc.
Provided by IHS under license with IEEE
No reproduction or networking permitted without license from IHS Not for Resale

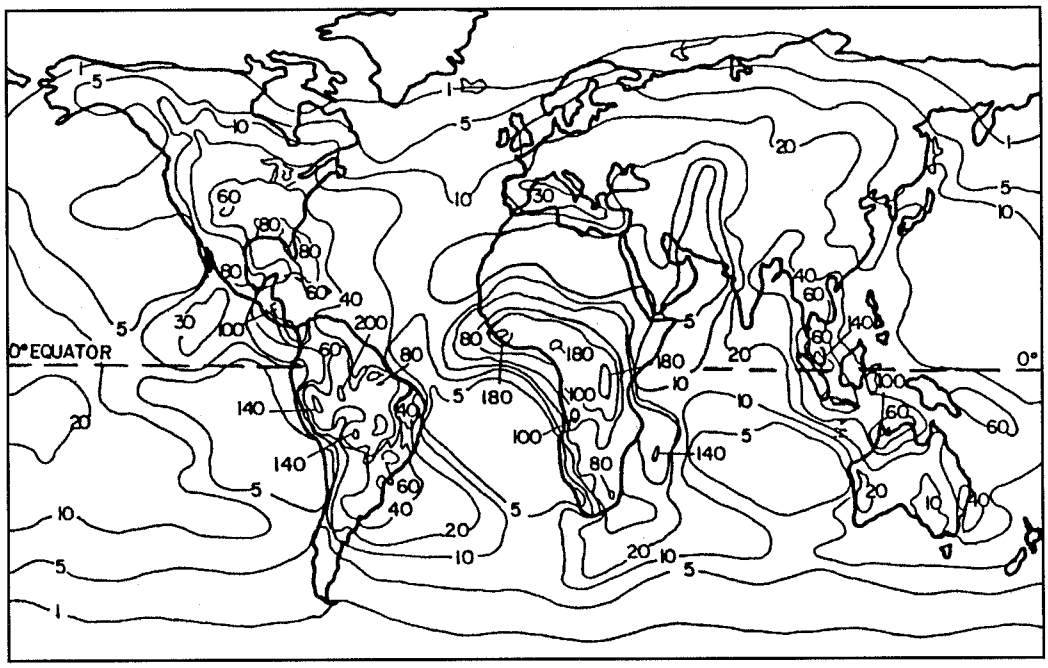

Source: World distribution of thunderstorm days, Part II,
published by World Meteorological Organization (1956)

Figure 2-8 —Mean annual thunderstorm days—the world

3. The design problem

The engineer who seeks to design a direct stroke shielding system for a substation or facility must contend with several elusive factors inherent with lightning phenomena, namely:

— The unpredictable, probabilistic nature of lightning
— The lack of data due to the infrequency of lightning strokes in substations
— The complexity and economics involved in analyzing a system in detail

There is known method of providing 100% shielding short of enclosing the equipment in a solid metallic enclosure. The uncertainty, complexity, and cost of performing a detailed analysis of a shielding system has historically resulted in simple rules of thumb being utilized in the design of lower voltage facilities. Extra high voltage (EHV) facilities, with their critical and more costly equipment components, usually justify a more sophisticated study to establish the risk vs. cost benefit.

Because of the above factors, it is suggested that a four-step approach be utilized in the design of a protection system:

a) Evaluate the importance and value of the facility being protected.

b) Investigate the severity and frequency of thunderstorms in the area of the substation facility and the exposure of the substation.

Copyright © 1996 IEEE All Rights Reserved

Copyright The Institute of Electrical and Electronics Engineers, Inc.
Provided by IHS under license with IEEE
No reproduction or networking permitted without license from IHS Not for Resale

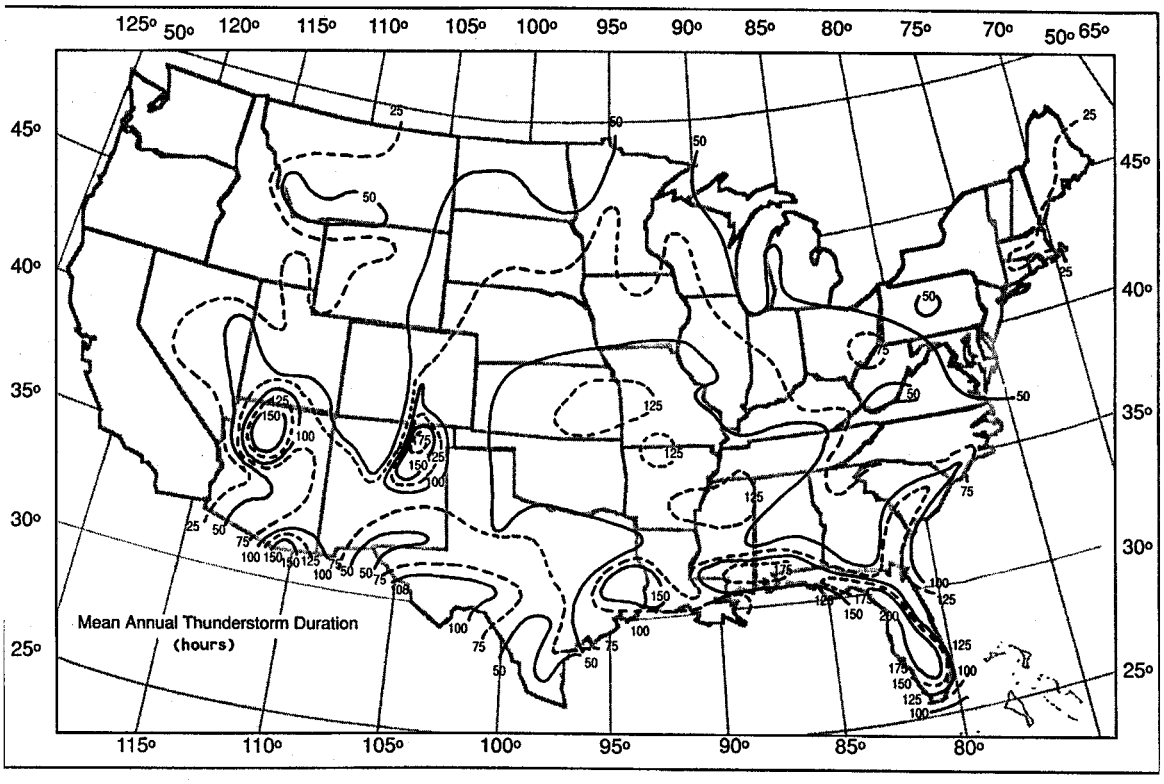

Source: NOAA

Figure 2-9 —Mean annual thunderstorm duration (hours), U.S.

c) Select an appropriate design method consistent with the above evaluation and then lay out an appropriate system of protection.

d) Evaluate the effectiveness and cost of the resulting design.

The following clauses and the bibliography listed in clause 7 will assist the engineer in performing these steps.

4. Empirical design methods

Two classical design methods have historically been employed to protect substations from direct lightning strokes:

a) Fixed angles

b) Empirical curves

The two methods have generally provided acceptable protection.

Copyright © 1996 IEEE All Rights Reserved

Copyright The Institute of Electrical and Electronics Engineers, Inc.
Provided by IHS under license with IEEE
No reproduction or networking permitted without license from IHS Not for Resale

Table 2-1—Empirical relationships between lightning ground flash density and annual thunder-days (*T*)

Location	Ground flash density $km^{-2}\ yr^{-1}$	Reference
India	$0.1T$	Aiya (1968)
Rhodesia	$0.14T$	Anderson and Jenner (1954)
South Africa	$0.04T^{1.25}$	Eriksson (1987)
Sweden	$0.004T^2$ (approx.)	Muller-Hillebrand (1964)
U.K.	aT^b	Stringfellow (1974) [$a = 2.6 \pm 0.2 \times 10^{-3}$; $b = 1.9 \pm 0.1$]
U.S.A. (North)	$0.11T$	Horn and Ramsey (1951)
U.S.A. (South)	$0.17T$	Horn and Ramsey (1951)
U.S.A.	$0.1T$	Anderson and others (1968)
U.S.A.	$0.15T$	Brown and Whitehead (1969)
U.S.S.R.	$0.036T^{1.3}$	Kolokolov and Pavlova (1972)
World (temperate climate)	$0.19T$	Brooks (1950)
World (temperate climate)	$0.15T$	Golde (1966)
World (tropical climate)	$0.13T$	Brooks (1950)

Reprinted from [B82] with permission of Academic Press Ltd.

4.1 Fixed angles

It is not known when the use of fixed angles first began. F. W. Peek, Jr., and other investigators recognized as early as 1924 [B78] that the area protected by a rod was bounded by a curved surface rather than a plane surface. It is likely, therefore, that fixed angles were originally used by designers as a convenient approximation of the boundary of protection against lightning strokes. Wagner, McCann, and MacLane, Jr., formalized the use of fixed angles in 1941 [B93]. Fixed angles continue in use today as a design tool.

The fixed-angle design method uses vertical angles to determine the number, position, and height of shielding wires or masts. Figure 4-1 illustrates the method for shielding wires, and figure 4-2 illustrates the method for shielding masts.

The angles used are determined by the degree of lightning exposure, the importance of the substation being protected, and the physical area occupied by the substation. The value of the angle alpha that is commonly used is 45°. Both 30° and 45° are widely used for angle beta. (See annex E.)

Designers using the fixed angle method may want to reduce the shielding angles as the height of the structures increases in order to maintain a low failure rate. Horvath [B42], using the EGM, calculated shielding failures as a function of the height of the conductor above ground and the protective angle for transmission lines. As can be seen from table 4-1, the protective angle must be decreased as the conductor is raised in order to maintain a uniform failure rate.

Copyright © 1996 IEEE All Rights Reserved

--`,,-`-`,,`,,`,`,,`---

Copyright The Institute of Electrical and Electronics Engineers, Inc.
Provided by IHS under license with IEEE
No reproduction or networking permitted without license from IHS Not for Resale

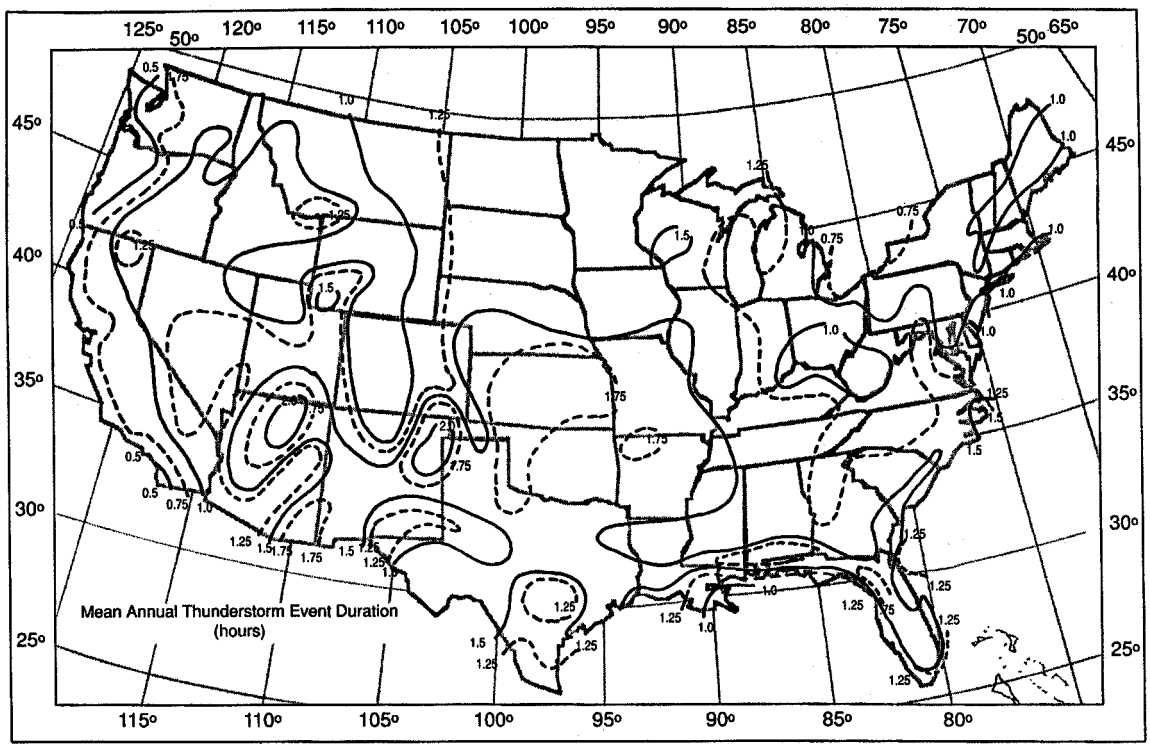

Source: NOAA

Figure 2-10 —Mean annual ground flash density—U.S.

Horvath suggests a protective angle of 40°–45° for heights up to 15 m (49 ft), 30° for heights between 15–25 m (49–82 ft) and less than 20° for heights on up to 50 m (164 ft). A failure rate of 0.1–0.2 shielding failures/100 km/year was assumed in these recommendations. (Horvath did not state the ground flash density used in his example.) This approach could also be used for selecting shielding angles for ground wires in substations.

A similar approach could be used for applying lightning masts in substations. Horvath suggested using the rolling sphere method (see clause 5.) to compile a table of shielding angles vs. conductor heights.

4.2 Origin of empirical curves

The use of empirical curves finds its origin in a paper published in 1941 by Wagner, McCann, and MacLane [B93]. Scale model tests were conducted employing a 1-1/2 × 40 μs positive impulse to initiate a discharge from a rod (representing the charged cloud) to a ground plane or a horizontal shield wire and conductor located near the electrode. The relative spacing of the electrode, shield wire, and conductor was varied with each discharge so as to produce an adequate data base for analysis. Plots were then made from this data base showing the percent of discharges striking the shield wire, conductor, or ground plane. The authors also studied the lightning performance of many existing lines and the shielding system used and correlated the findings with their scale model work. The resulting recommendations have been used for fifty years and continue to be used.

Copyright © 1996 IEEE All Rights Reserved

Copyright The Institute of Electrical and Electronics Engineers, Inc.
Provided by IHS under license with IEEE
No reproduction or networking permitted without license from IHS Not for Resale

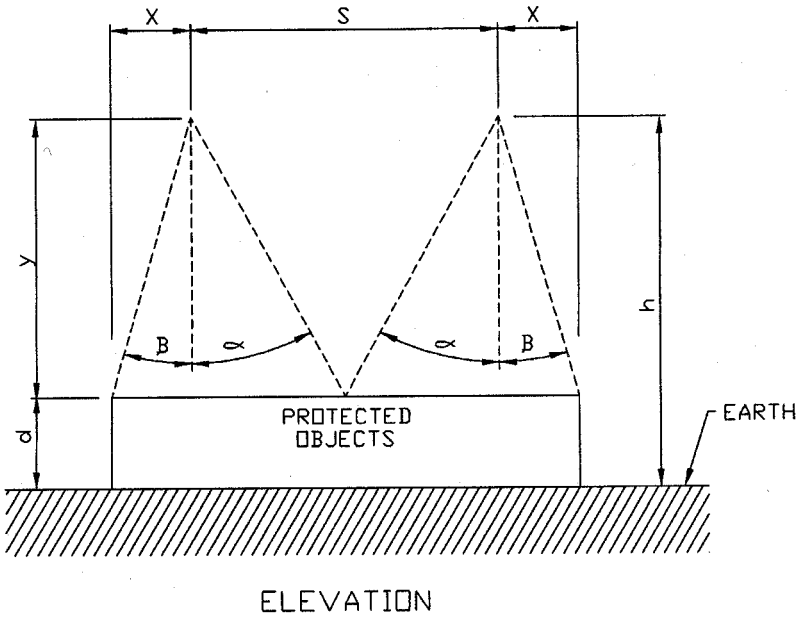

ELEVATION

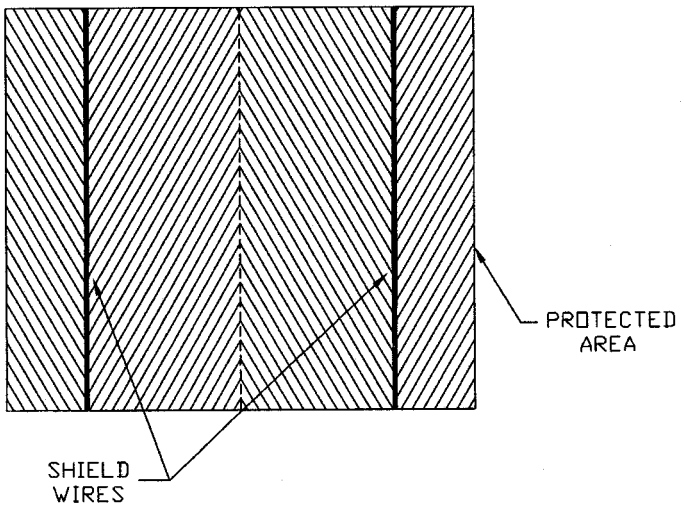

Figure 4-1 —Fixed angles for shielding wires

Copyright © 1996 IEEE All Rights Reserved

Copyright The Institute of Electrical and Electronics Engineers, Inc.
Provided by IHS under license with IEEE
No reproduction or networking permitted without license from IHS
Not for Resale

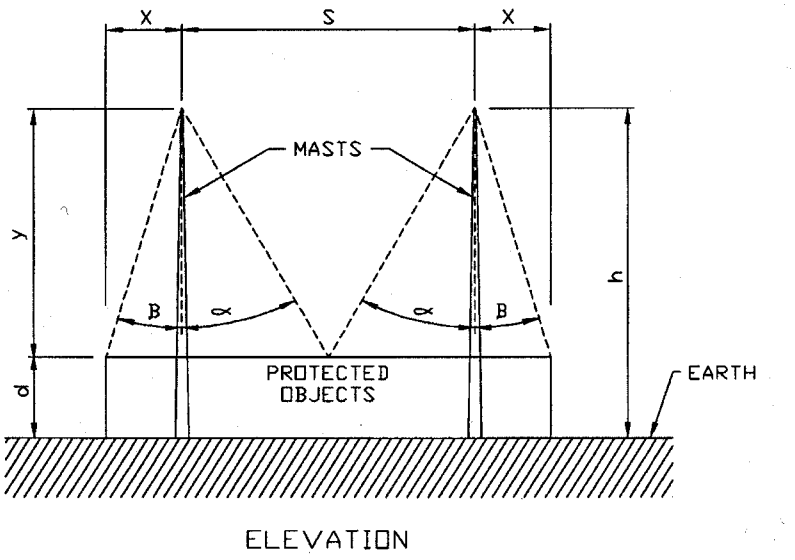

ELEVATION

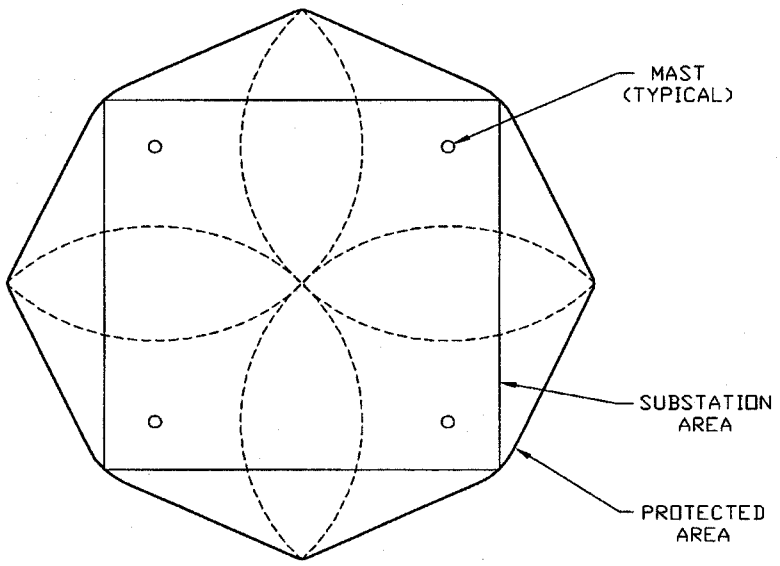

Figure 4-2 —Fixed angles for masts

Copyright © 1996 IEEE All Rights Reserved

Copyright The Institute of Electrical and Electronics Engineers, Inc.
Provided by IHS under license with IEEE
No reproduction or networking permitted without license from IHS
Not for Resale

Table 4-1 —Calculated frequency of shielding failures as a function of the height and the protective angle

Height of earth wire in m	Shielding failure/100 km per year with protective angle:						
	15°	20°	25°	30°	35°	40°	45°
10	0	0	1.1E-4	0.0087	0.0383	0.1032	0.2286
15	0	6.4E-5	0.0068	0.0351	0.0 982	0.2182	0.4483
20	8.3E-6	0.0026	0.0214	0.0711	0.1695	0.3466	0.6903
25	0.0011	0.0087	0.0404	0.1123	0.2468	0.4819	0.9429
30	0.0035	0.0170	0.0620	0.1565	0.3275	0.6208	1.2008
35	0.0069	0.0269	0.0853	0.2024	0.4100	0.7616	1.4608
40	0.0109	0.0378	0.1096	0.2494	0.4936	0.9035	1.7214
45	0.0155	0.0493	0.1345	0.2969	0.5776	1.0462	1.9820
50	0.0204	0.0612	0.1598	0.3447	0.6619	1.1892	2.2423

Source: [B42]. Reprinted with permission of Research Studies Press Ltd.

The following year, 1942, Wagner, McCann, and Lear published a paper on shielding of substations [B94]. These investigations were based on additional scale model tests, and a series of curves were developed relating height and spacing of shield wires and masts to various failure rates. These curves produce a more accurate design than straight line approximations. This design method also continues to find wide use today.

4.3 Application of empirical curves

From field studies of lightning and laboratory model tests, empirical curves have been developed to determine the number, position, and height of shielding wires and masts [B93], [B94], [B96].

The curves were developed for shielding failure rates of 0.1, 1.0, 5.0, 10, and 15%. Curves for different configurations of shielding wires and masts are shown in figures A.1 through A.6 of annex A for failure rates of 0.1 and 1.0%. A failure rate of 0.1% is commonly used in design.

Figures A.1 through A.6 use ratios of d/h, x/h, and s/h, which were used in the original study [B94]. Figures 4-3 through 4-14 have been developed using figures A.1 through A.6 for a variety of protected object heights, d, to eliminate the necessity of using ratios. For a given x/h (s/h) ratio along the abscissa in figures A.1 through A.6, the ordinate value yields a d/h ratio for a desired failure rate. For each selected value of d, a value of h for each discrete value of x/h can be calculated as $h = d/(d/h)$. Now, for these discrete values of h for a selected d, values of the horizontal separation, x (s), can be calculated from $x = x/h \cdot h$ ($s = s/h \cdot h$). The difference between the protected object height, d, and the shielding mast, or wire, height, h, can be calculated as $y = h - d$. These values of y can be plotted as a continuous curve $f(x, y)$ for a constant value d as shown in figures 4-3 through 4-14. For example, in figure A.2, data points from the original study appear to be plotted at x/h values of 0.25, 0.6, and 1.0. At the value of x/h equal to 0.6, d/h is estimated to be 0.46 for a 0.1% failure rate.

For d = 20 ft:

$h = 20/0.46 = 43.48$ ft
$x = 0.6 \times 43.48 = 26.09$ ft
$y = 43.48 - 20 = 23.48$ ft

Copyright © 1996 IEEE All Rights Reserved

Copyright The Institute of Electrical and Electronics Engineers, Inc.
Provided by IHS under license with IEEE
No reproduction or networking permitted without license from IHS Not for Resale

Similarly, values of *d/h* can be estimated for other values of *x/h* and the resulting *x* and *y* values plotted for each selected value of *d* for each failure rate. These particular values are illustrated in figure 4-5.

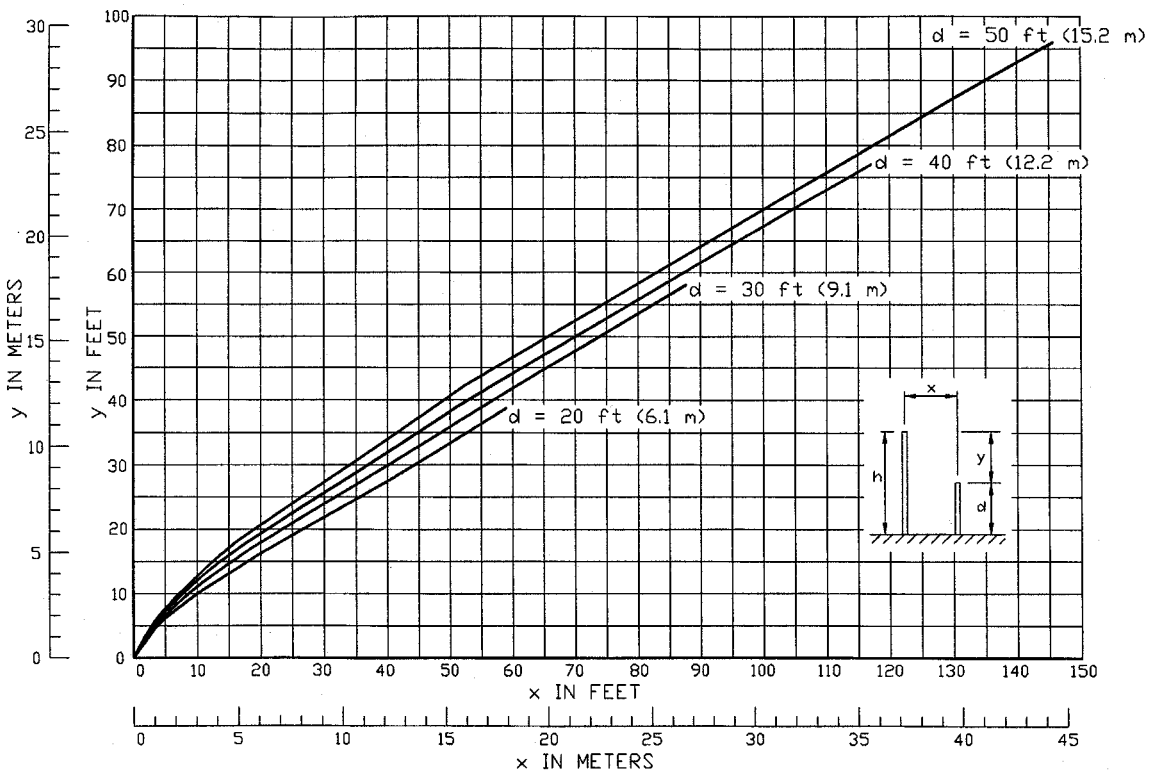

Figure 4-3 —Single lightning mast protecting single object—0.1% exposure. Height of lightning mast above protected object, *y*, as a function of horizontal separation, *x*, and height of protected object, *d*

To evaluate the expected shielding performance of a substation site, proceed as follows:

a) Determine the ground flash density using Eq 2-3 or Eq 2-4.

b) Calculate the number of flashes to the substation area, N_s.

$$N_s = GFD \times A / (1000)^2$$

where

GFD is the ground flash density in strokes per square kilometer per year
A is the substation area in square meters

c) Calculate number of strokes per year penetrating the shield, *SP*.

$$SP = N_s \times \text{exposure rate} \quad (1)$$

Choose acceptable exposure rate (Example 0.1% or 0.001)

WARNING

The user is warned not to extrapolate the curves of figure 4-3 through figure 4-14 beyond their limits as plotted. Such extrapolations can result in exposures beyond the listed values.

Copyright © 1996 IEEE All Rights Reserved

Copyright The Institute of Electrical and Electronics Engineers, Inc.
Provided by IHS under license with IEEE
No reproduction or networking permitted without license from IHS Not for Resale

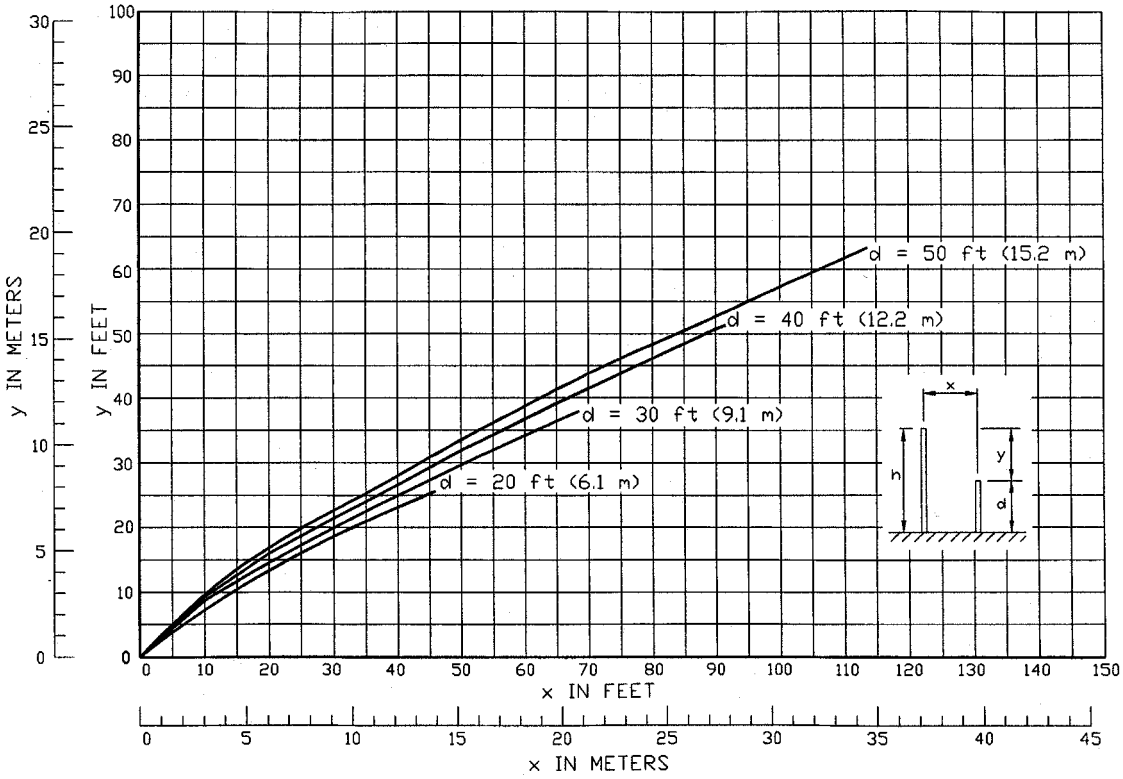

Figure 4-4 —Single lightning mast protecting single object—l% exposure. Height of lightning mast above protected object, y, as a function of horizontal separation, x, and height of protected object, d

4.3.1 Areas protected by lightning masts

Figures 4-15 and 4-16 illustrate the areas that can be protected by two or more shielding masts [B94]. If two masts are used to protect an area, the data derived from the empirical curves give shielding information only for the point *B*, midway between the two masts, and for points on the semicircles drawn about the masts, with radius *x*, as shown in figure 4-15(a). The locus shown in figure 4-15(a), drawn by the semicircles around the masts, with radius *x*, and connecting the point *B*, represents an approximate limit for a selected exposure rate. For given values of *d* and *y*, a value of *s* from figure 4-7 and *x* from figure 4-5 can be determined for an exposure rate of 0.1%. Any single point falling within the cross-hatched area should have < 0.1% exposure. Points outside the cross-hatched area will have > 0,1% exposure. Figure 4-15(b) illustrates this phenomenon for four masts spaced at the distance s as in figure 4-15(a).

The protected area can be improved by moving the masts closer together, as illustrated in figure 4-16. In figure 4-16(a), the protected areas are, at least, as good as the combined areas obtained by superimposing those of figure 4-15(a). In figure 4-16(a), the distance s' is one-half the distance *s* in figure 4-15(a). To estimate the width of the overlap, x', first obtain a value of *y* from figure 4-7 corresponding to twice the distance, s', between the masts. (Figure 4-9 has been prepared to facilitate this estimate directly.) Then use figure 4-5 to determine x' for this value of *y*. This value of *x* is used as an estimate of the width of overlap x' in figure 4-16. As illustrated in figure 4-16(b), the size of the areas with an exposure greater than 0.1% has been significantly reduced.

Copyright © 1996 IEEE All Rights Reserved

Copyright The Institute of Electrical and Electronics Engineers, Inc.
Provided by IHS under license with IEEE
No reproduction or networking permitted without license from IHS
Not for Resale

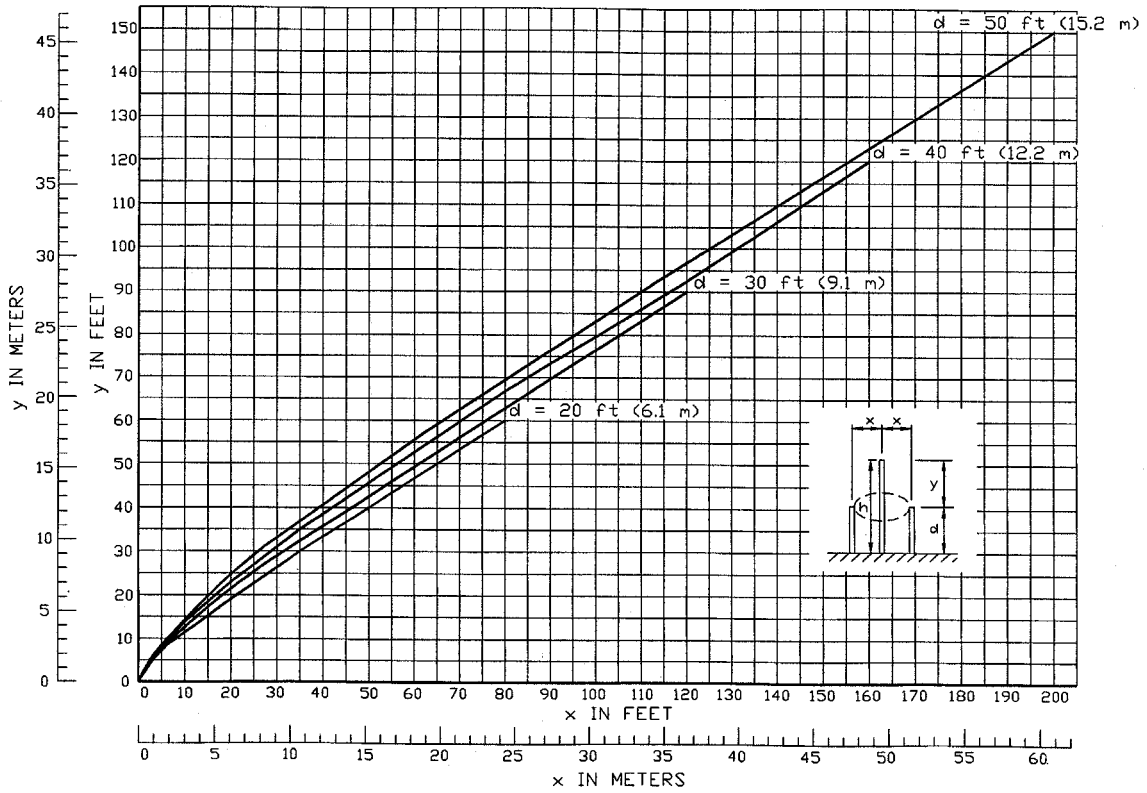

Figure 4-5 —Single lightning mast protecting single ring of objects—0.1% exposure. Height of lightning mast above protected object, y, as a function of horizontal separation, x, and height of protected object, d

4.3.2 Effect of hillsides

For the application of the data presented here to stations located on hillsides, the dimensions *h* (the shielding conductor height) and *d* (the height of the protected object) should be measured perpendicular to the earth's surface as illustrated in figure 4-17 [B94].

5. The electrogeometric model (EGM)

5.1 History

A rudimentary version of the electrogeometric model was developed by Golde in 1945 [B35], but the method was never adapted to shielding systems. In the mid-1950s, the first North American 345 kV transmission lines were placed in service. The shielding design of the lines was based primarily on the methods found in [B1]. The outage rate from lightning strokes subsequently proved to be much higher than expected, and this set in motion a thorough investigation of the problem. The modern EGM emerged as a result of this research.

Copyright © 1996 IEEE All Rights Reserved

Copyright The Institute of Electrical and Electronics Engineers, Inc.
Provided by IHS under license with IEEE
No reproduction or networking permitted without license from IHS
Not for Resale

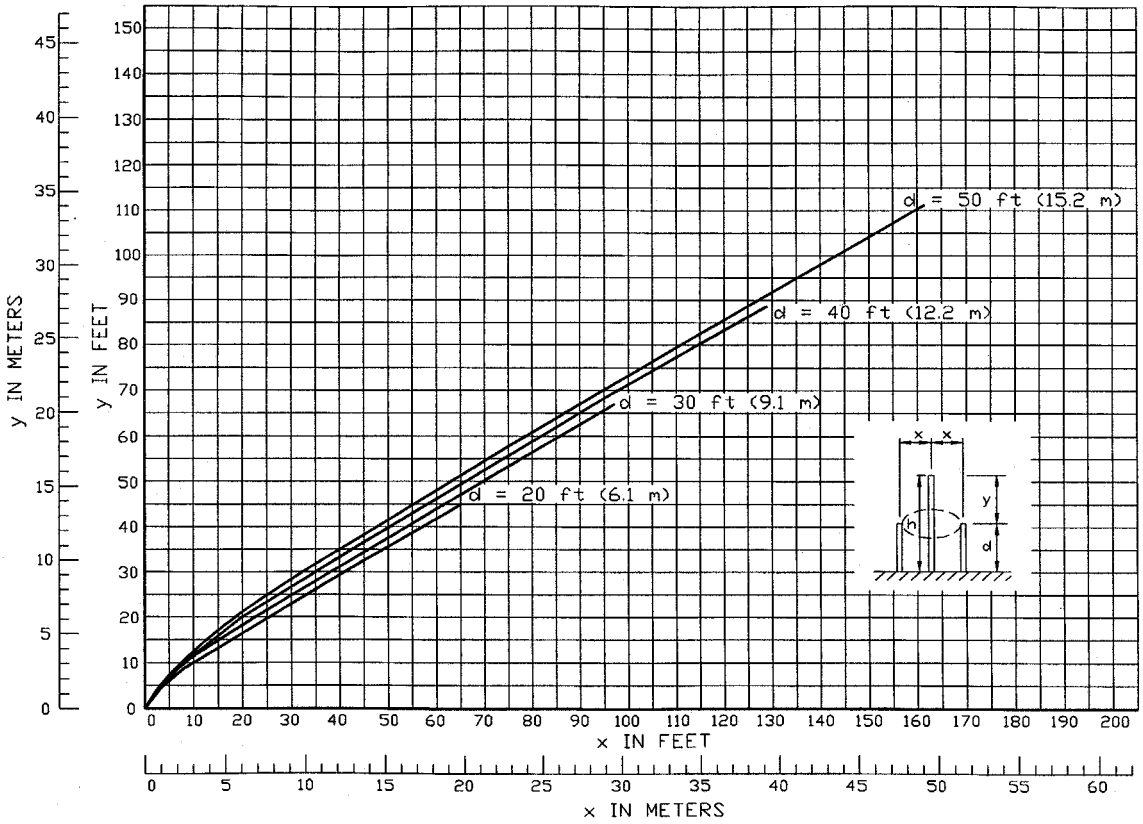

Figure 4-6 —Single lightning mast protecting single ring of objects—1% exposure. Height of lightning mast above protected object, y, as a function of horizontal separation, x, and height of protected object, d

5.1.1 Whitehead's EGM

In 1960, J. G. Anderson developed a computer program for calculation of transmission line lightning performance that uses the *Monte Carlo Method* [B3]. This method showed good correlation with actual line performance. An early version of the EGM was developed in 1963 by Young et al. [B101], but continuing research soon led to new models.

One extremely significant research project was performed by E. R. Whitehead [B97]. Whitehead's work included a theoretical model of a transmission system subject to direct strokes, development of analytical expressions pertaining to performance of the line, and supporting field data which verified the theoretical model and analyses. The final version of this model was published by Gilman and Whitehead in 1973 [B33].

5.1.2 Recent improvements in the EGM

Sargent made an important contribution with the *Monte Carlo Simulation* of lightning performance [B85] and his work on lightning strokes to tall structures [B84]. Sargent showed that the frequency distribution of the amplitudes of strokes collected by a structure depends on the structure height as well as on its type (mast vs. wire). Figure 5-1 shows the effect of the height of the structure, according to Sargent. In 1976 Mousa [B60] extended the application of the EGM (which was developed for transmission lines) to substation facilities.

Copyright © 1996 IEEE All Rights Reserved

Copyright The Institute of Electrical and Electronics Engineers, Inc.
Provided by IHS under license with IEEE
No reproduction or networking permitted without license from IHS Not for Resale

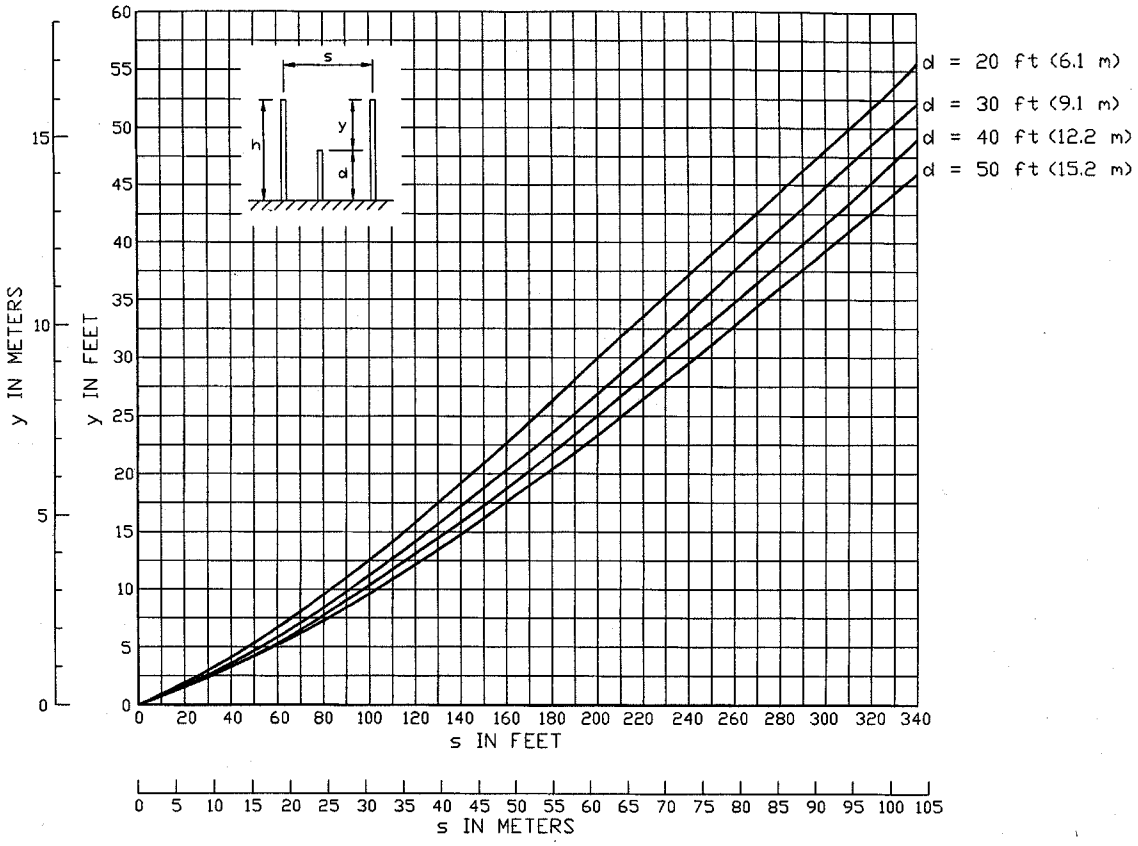

Figure 4-7 —Two lightning masts protecting single object, no overlap—0.1% exposure. Height of mast above protected object, y, as a function of horizontal separation, s, and height of protected object, d

5.1.3 Criticism of the EGM

Work by Eriksson reported in 1978 [B27] and later work by Anderson and Eriksson reported in 1980 [B5] revealed apparent discrepancies in the EGM that tended to discredit it. Mousa [B67] has shown, however, that explanations do exist for the apparent discrepancies, and that many of them can be eliminated by adopting a revised electrogeometric model. Most investigators now accept the EGM as a valid approach for designing lightning shielding systems.

5.2 A revised EGM

This guide uses the revised EGM as developed by Mousa and Srivastava [B63], [B67]. Two methods of applying the EGM are the modified version of the rolling sphere method [B49], [B50], [B74] described in 5.3, and the method given by Mousa and Srivastava [B67], [B71] described in 5.4.

Copyright © 1996 IEEE All Rights Reserved

Copyright The Institute of Electrical and Electronics Engineers, Inc.
Provided by IHS under license with IEEE
No reproduction or networking permitted without license from IHS
Not for Resale

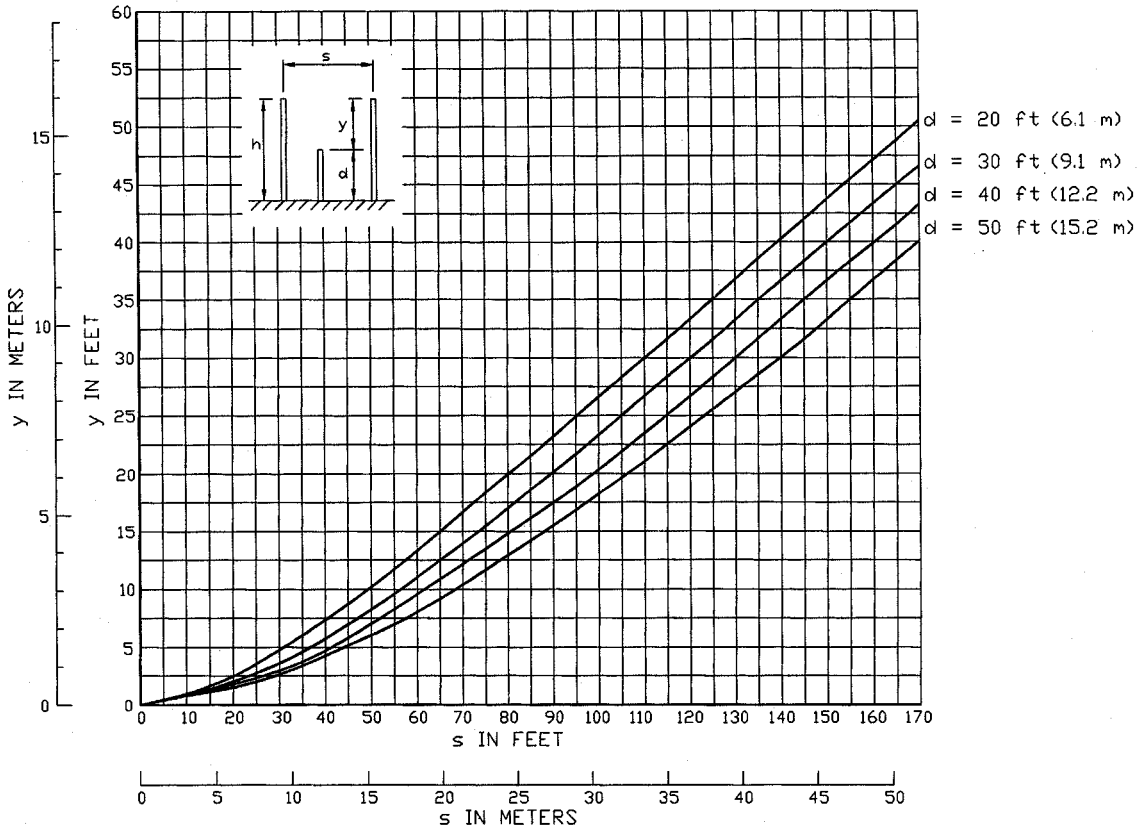

Figure 4-8 —Two lightning masts protecting single object, no overlap—1% exposure. Height of mast above protected object, y as a function of horizontal separation, s, and height of protected object, d

The revised EGM model differs from Whitehead's model in the following respects:

a) The stroke is assumed to arrive in a vertical direction. (It has been found that Whitehead's assumption of the stroke arriving at random angles is an unnecessary complication.) [B67]

b) The differing striking distances to masts, wires, and the ground plane are taken into consideration.

c) A value of 24 kA is used as the median stroke current [B70]. This selection is based on the frequency distribution of the first negative stroke to flat ground. This value best reconciles the EGM with field observations.

d) The model is not tied to a specific form of the striking distance equations Eq 2-1. Continued research is likely to result in further modification of this equation as it has in the past. The best available estimate of this parameter may be used.

5.2.1 Description of the revised EGM

In clause 2. of this guide the process of stroke formation was discussed. The concept that the final striking distance is related to the magnitude of the stroke current was introduced and Eq 2-1D was selected as the best approximation of this relationship. A coefficient *k* accounts for the different striking distances to a mast, a shield wire, and to the ground. Eq 2-1D is repeated here with this modification:

Copyright © 1996 IEEE All Rights Reserved

Copyright The Institute of Electrical and Electronics Engineers, Inc.
Provided by IHS under license with IEEE
No reproduction or networking permitted without license from IHS Not for Resale

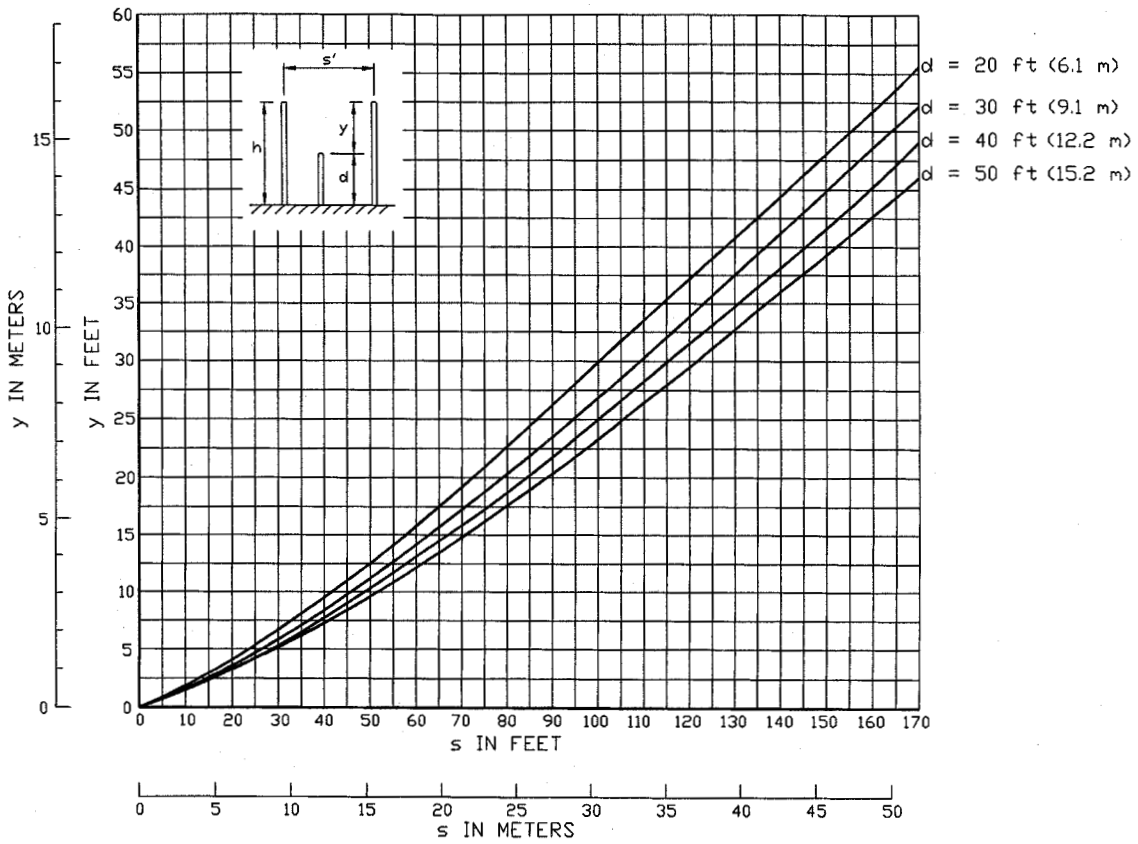

Figure 4-9—Two lightning masts protecting single object, with overlap—0.1% exposure. Height of mast above protected object, *y*, as a function of horizontal separation, *s*, and height of protected object, *d*

$$S_m = 8\ k\ I^{0.65} \tag{5-1A}$$

or

$$S_f = 26.25\ k\ I^{0.65} \tag{5-1B}$$

where

S_m is the strike distance in meters
S_f is the strike distance in feet
I is the return stroke current in kiloamperes
k is a coefficient to account for different striking distances to a mast, a shield wire, or the ground plane.

Mousa [B67] gives a value of $k = 1$ for strokes to wires or the ground plane and a value of $k = 1.2$ for strokes to a lightning mast.

Copyright © 1996 IEEE All Rights Reserved

Copyright The Institute of Electrical and Electronics Engineers, Inc.
Provided by IHS under license with IEEE
No reproduction or networking permitted without license from IHS Not for Resale

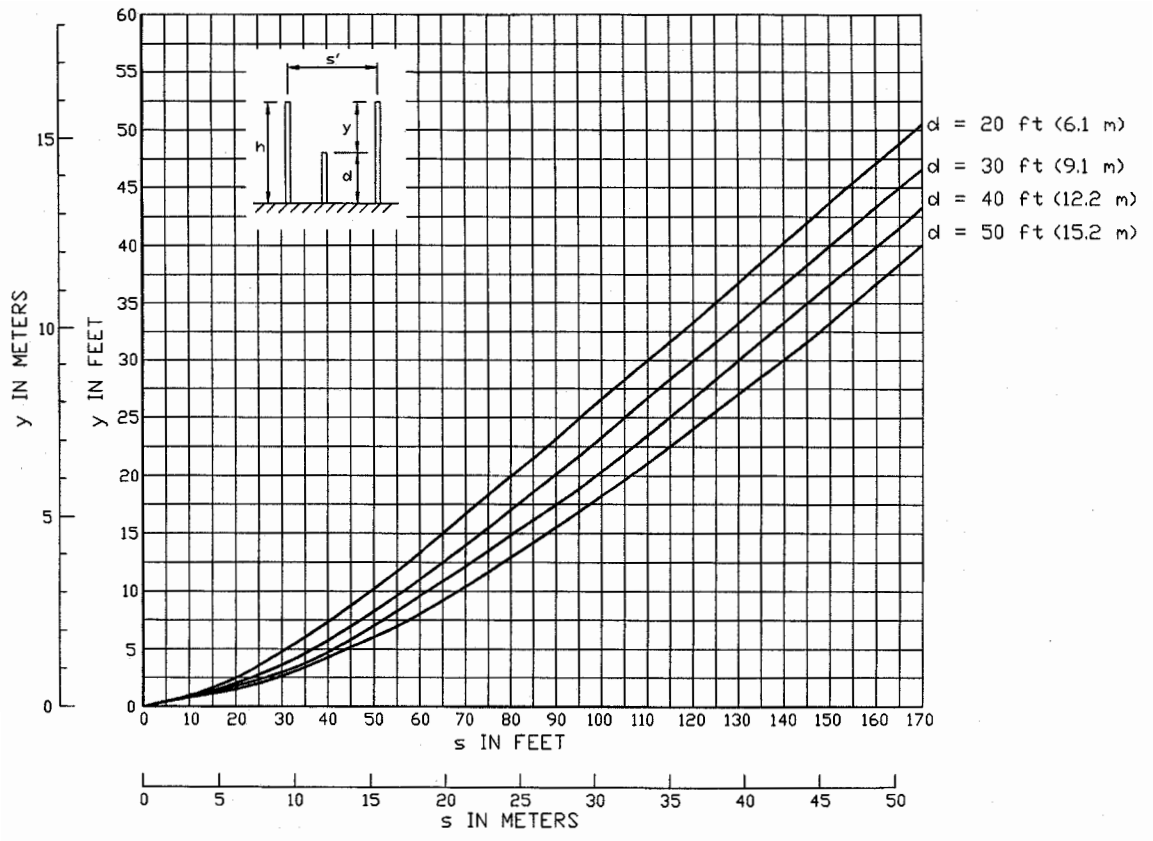

Figure 4-10 —Two lightning masts protecting single object, with overlap—1% exposure. Height of mast above protected object, y, as a function of horizontal separation, s, and height of protected object, d

Lightning strokes have a wide distribution of current magnitudes, as shown in figure 2-4. The EGM theory shows that the protective area of a shield wire or mast depends on the amplitude of' the stroke current. If a shield wire protects a conductor for a stroke current I_s, it may not shield the conductor for a stroke current less than I_s that has a shorter striking distance. Conversely, the same shielding arrangement will provide greater protection against stroke. currents greater than I_s that have greater striking distances. This principle is discussed in more detail in 5.3.

Since strokes less than some critical value I_s can penetrate the shield system and terminate on the protected conductor, the insulation system must be able to withstand the resulting voltages without flashover. Stated another way, the shield system should intercept all strokes of magnitude I_s and greater so that flashover of the insulation will not occur.

5.2.2 Allowable stroke current

Some additional relationships need to be introduced before showing how the EGM is used to design a zone of protection for substation equipment. Bus insulators are usually selected to withstand a *basic lightning impulse level* (BIL). Insulators may also be chosen according to other electrical characteristics including negative polarity *impulse critical flashover* (C.F.O.) voltage. Flashover occurs if the voltage produced by the lightning stroke current flowing through the surge impedance of the station bus exceeds the withstand value. This may be expressed by the Gilman & Whitehead equation [B33]:

$$I_S = \frac{\text{BIL} \times 1.1}{(Z_S/2)} = \frac{2.2\ (\text{BIL})}{Z_S} \qquad (5\text{-}2A)$$

Copyright © 1996 IEEE All Rights Reserved

Copyright The Institute of Electrical and Electronics Engineers, Inc.
Provided by IHS under license with IEEE
No reproduction or networking permitted without license from IHS Not for Resale

or

$$I_S = \frac{0.94 \times \text{C.F.O.} \times 1.1}{(Z_S/2)} = \frac{2.068\ (\text{C.F.O.})}{Z_S} \qquad (5\text{-}2B)$$

where

I_S is the allowable stroke current in kiloamperes
BIL is the basic lightning impulse level in kilovolts
C.F.O is the negative polarity critical flashover voltage of the insulation being considered in kilovolts
Z_S is the surge impedance of the conductor through which the surge is passing in ohms
1.1 is the factor to account for the reduction of stroke current terminating on a conductor as compared to zero impedance earth [B33]

A method of computing the surge impedance under corona is given in annex C.

In Equation 5-2B, the C.F.O. has been reduced by 6% to produce a withstand level roughly equivalent to the BIL rating for post insulators.

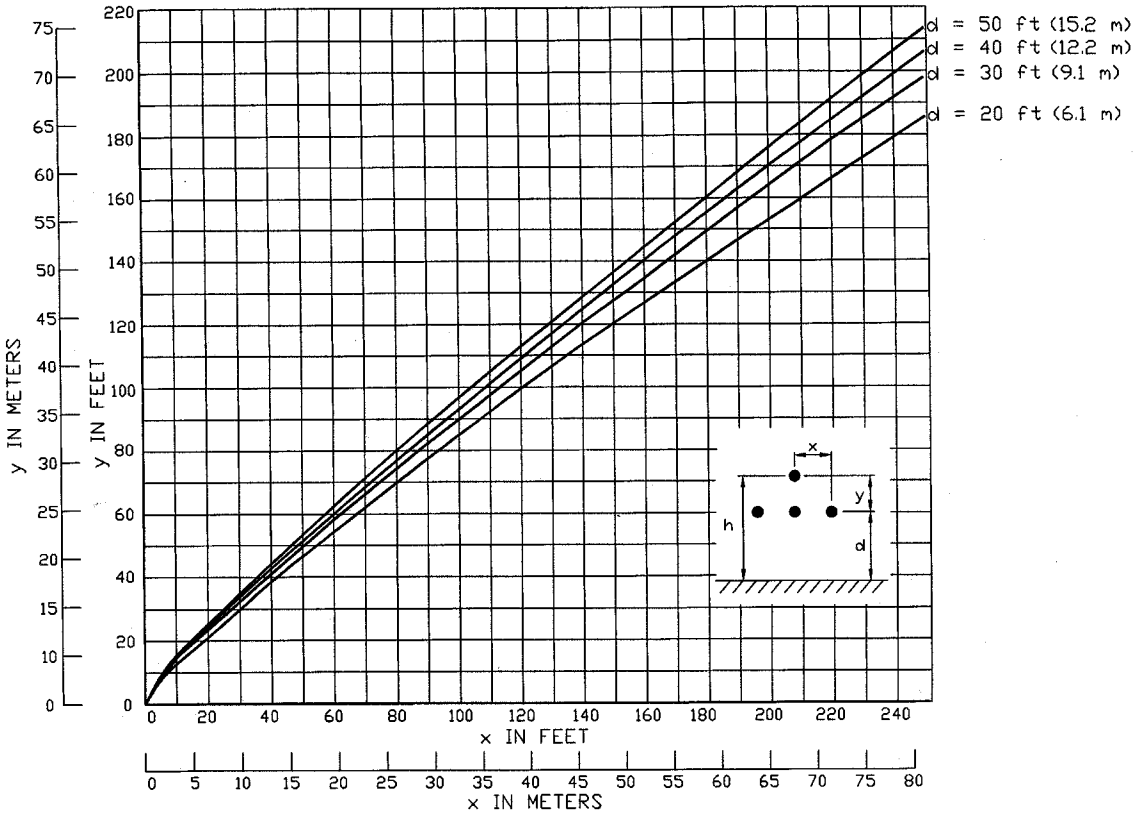

Figure 4-11 —Single shield wire protecting horizontal conductors—0.1% exposure. Height of shield wires above conductors, y, as a function of horizontal separation, x, and height of protected conductors, d

Copyright © 1996 IEEE All Rights Reserved

Copyright The Institute of Electrical and Electronics Engineers, Inc.
Provided by IHS under license with IEEE
No reproduction or networking permitted without license from IHS
Not for Resale

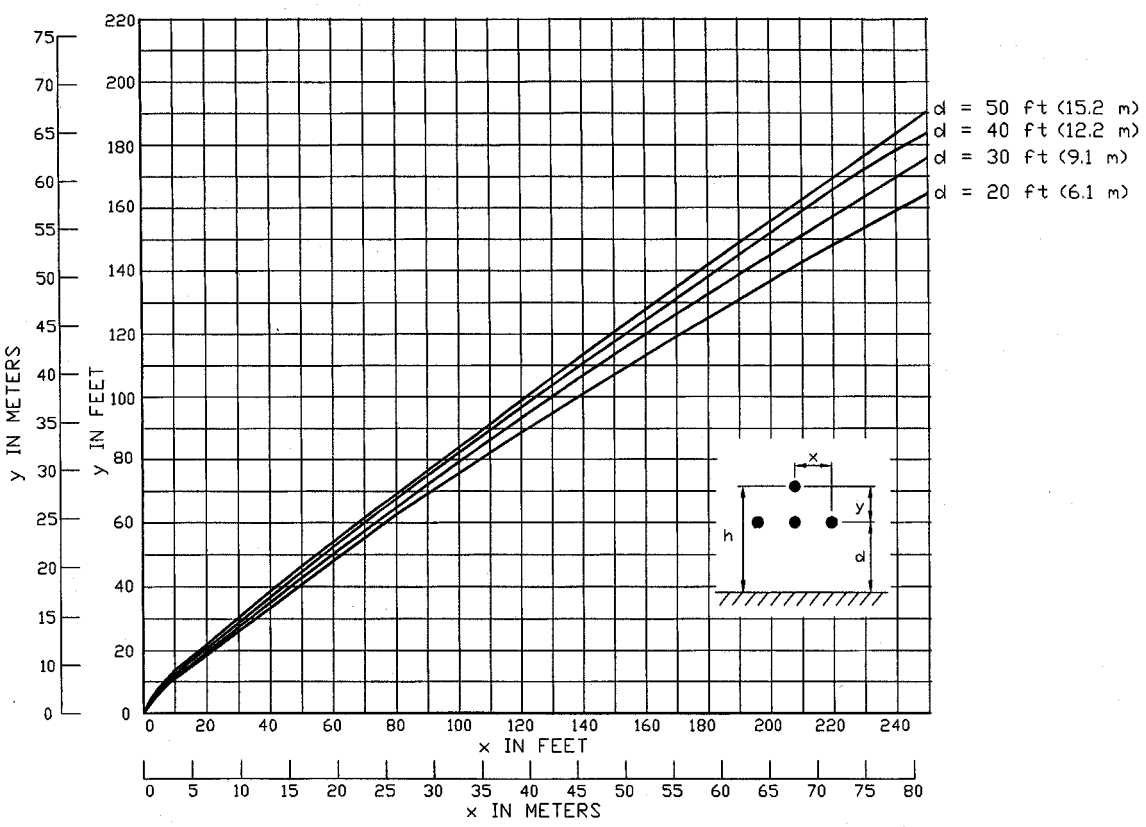

Figure 4-12 —Single shield wire protecting horizontal conductors—1% exposure. Height of shield wires above conductors, y, as a function of horizontal separation, x, and height of protected conductors, d

5.2.2.1 Adjustment for end of bus situation

Equations 5-2A and 5-2B address the typical situation in which a direct lightning stroke to a conductor would have at least two directions to flow. The equations assume the surge impedances are the same in both directions, and therefore the total surge impedance is the parallel combination of the two, or 1/2 Z_S. Occasionally a designer may be concerned with a situation in which the entire direct stroke current produces a surge voltage across the equipment. An example would be a direct stroke to the end of a radial bus. The surge can only flow in one direction, and the surge voltage impressed across the insulators of the bus would be the product of the total direct stroke current multiplied by the bus surge impedance. For such situations, the allowable: stroke current I_S can be determined by dividing the results of calculations using equations 5-2A and 5-2B by 2.

Copyright © 1996 IEEE All Rights Reserved

Copyright The Institute of Electrical and Electronics Engineers, Inc.
Provided by IHS under license with IEEE
No reproduction or networking permitted without license from IHS Not for Resale

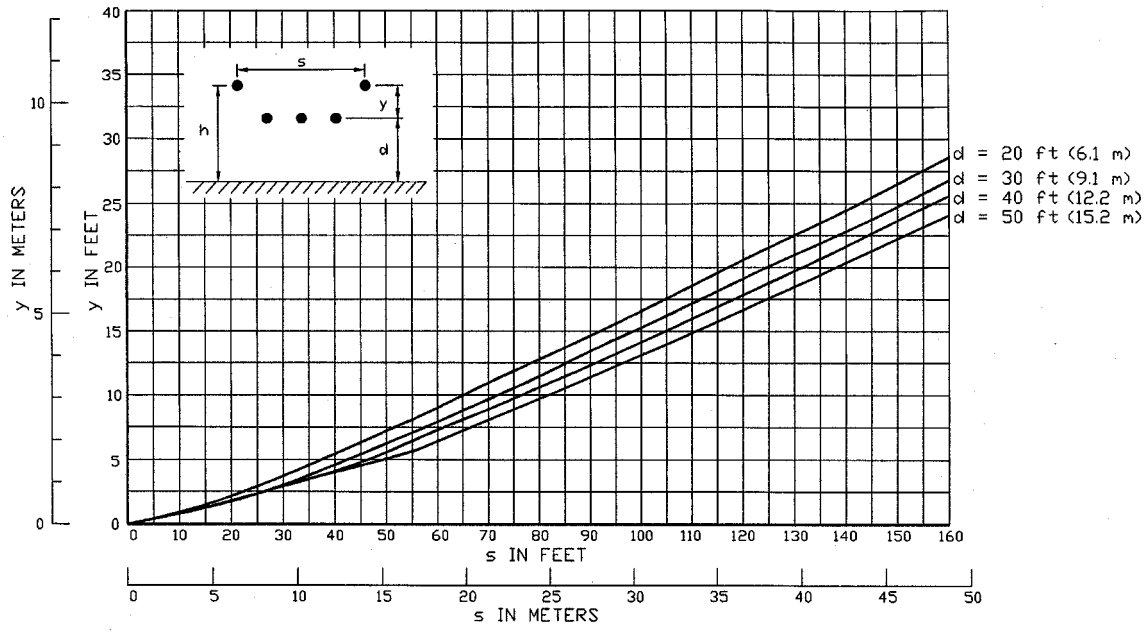

Figure 4-13 —Two shield wires protecting horizontal conductors—0.1% exposure. Height of shield wires above conductors, y, as a function of horizontal separation, s, and height of protected conductors, d

5.2.2.2 Adjustment for transformer, open switch or open breaker

Another situation where a designer may have concern is at open points in the conductor (such as open switches and open breakers), or points along, the conductor where the surge impedance changes to a large value such as at transformer windings. At such locations, the voltage wave will reverse its direction of flow and return along the conductor. The voltage stress at these points will be up to two times the incoming value. This is referred to as the voltage doubling effect. If the design has incorporated surge arresters at the point of high surge impedance change, such as at the bushings of transformers, the concern for voltage doubling is minimized. The arresters should operate and maintain the voltage at the discharge voltage level of the arresters. However, if arresters have not been applied at such points, the designer may wish to determine the allowable stroke currents for these locations considering voltage doubling. The allowable stroke current I_S can again be determined by dividing the results of calculations using Equations 5-2A and 5-2B by 2.

The designer should keep in mind that reduced BIL equipment is not protected by a design based on stroke current I_s. Such equipment should be protected by surge arresters in accordance with IEEE Std C62.22-1991 [B45].

Copyright © 1996 IEEE All Rights Reserved

Copyright The Institute of Electrical and Electronics Engineers, Inc.
Provided by IHS under license with IEEE
No reproduction or networking permitted without license from IHS Not for Resale

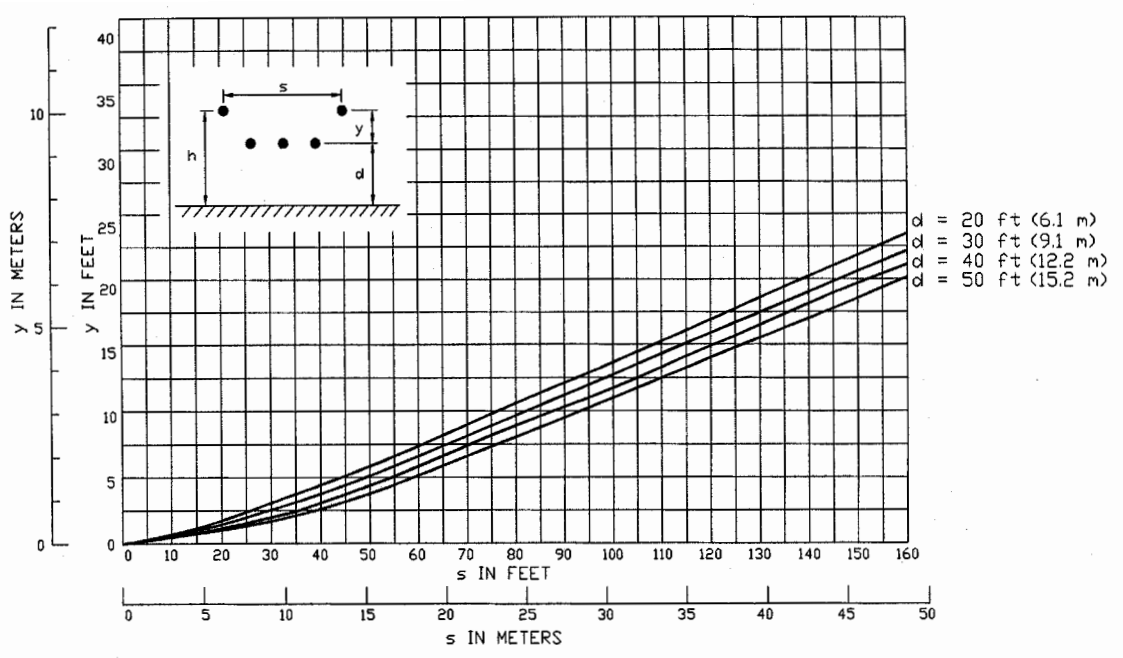

Figure 4-14 —Two shield wires protecting horizontal conductors—1% exposure. Height of shield wires above conductors, y, as a function of horizontal separation, s, and height of protected conductors, d

5.2.3 Withstand voltage of insulator strings

BIL values of station post insulators can be found in vendor catalogs. A method is given below for calculating the withstand voltage of insulator strings. Figure 5-2 gives the critical flashover voltage of insulator strings. These were compiled by Darveniza, et al. [B26] based on the experimental work of Paris, et al. [B76] and Fujitaka, et al. [B31], and were adopted by Anderson [B4]. The withstand voltage in kV at 2 μs and 6 μs can be obtained from figure 5-2 or calculated as follows:

$$V_{I2} = 0.94 \times 820\ w \tag{5-3}$$

$$V_{I6} = 0.94 \times 585\ w \tag{5-4}$$

where

w	is the length of insulator string (or air gap) in meters
0.94	is the ratio of withstand voltage to C.F.O. voltage
V_{I2}	is the withstand voltage in kilovolts at 2 μs
V_{I6}	is the withstand voltage in kilovolts at 6 μs

Equation 5-4 is recomended for use with the EGM.

Note that figure 5-2 is based on the application of pure lightning impulses. However, it can also be applied to the case where the stress on the insulators includes a power frequency component (ac or dc) as follows: A combined voltage surge stress consisting of an ac component equal to a (kV) and a lightning surge component equal to b (kV) can be considered equivalent to a pure lightning surge having an amplitude equal to (a + b). This is the approach used by Anderson [B4] and by Clayton and Young [B23]. The paper by

Copyright © 1996 IEEE All Rights Reserved

Copyright The Institute of Electrical and Electronics Engineers, Inc.
Provided by IHS under license with IEEE
No reproduction or networking permitted without license from IHS Not for Resale

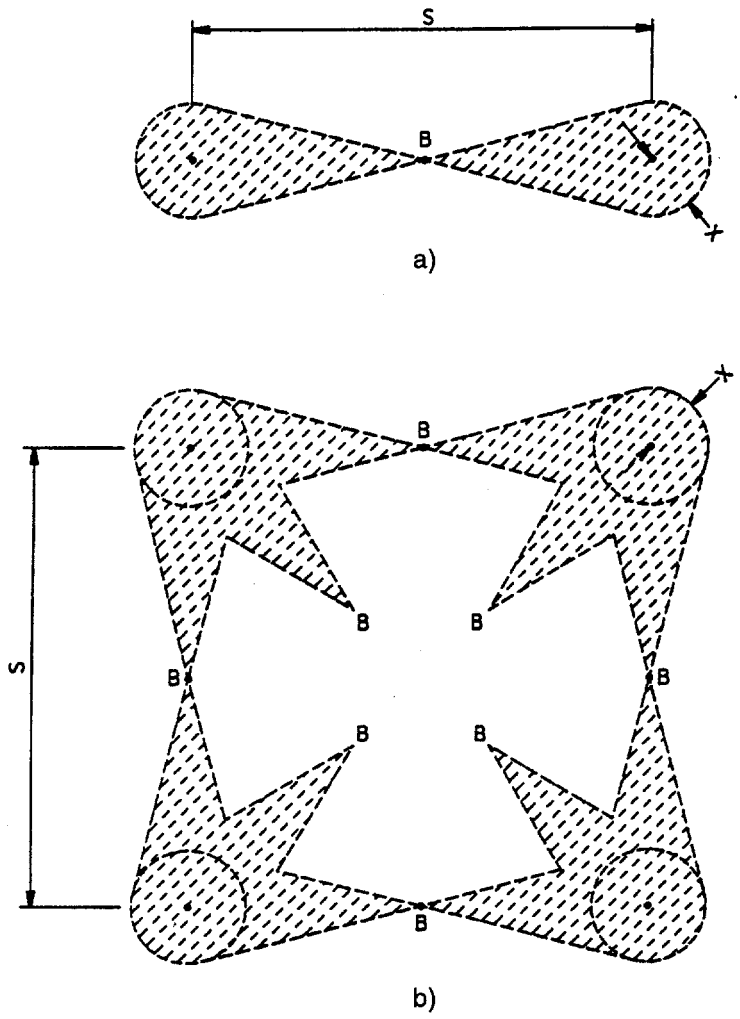

Source: Adapted from [B94]

Figure 4-15 —Areas protected by multiple masts for point exposures shown in figures 4-5 and 4-7 or 4-6 and 4-8
(a) With two lightning masts
(b) With four lightning masts

Hepworth,. et al. [B41] and its discussion by K, Feser support the above approach, while an IEEE Working Group [B43] suggests that a dc bias may have a conditioning effect that would increase the *switching surge* strength of the gap under the combined stress beyond the value for a pure switching surge.

5.3 Application of the EGM by the rolling sphere method

The previous clauses introduced the concept of the electrogeometric model and gave the tools necessary to calculate the unknown parameters. The concept will now be further developed and applied to substation situations.

Copyright © 1996 IEEE All Rights Reserved

Copyright The Institute of Electrical and Electronics Engineers, Inc.
Provided by IHS under license with IEEE
No reproduction or networking permitted without license from IHS Not for Resale

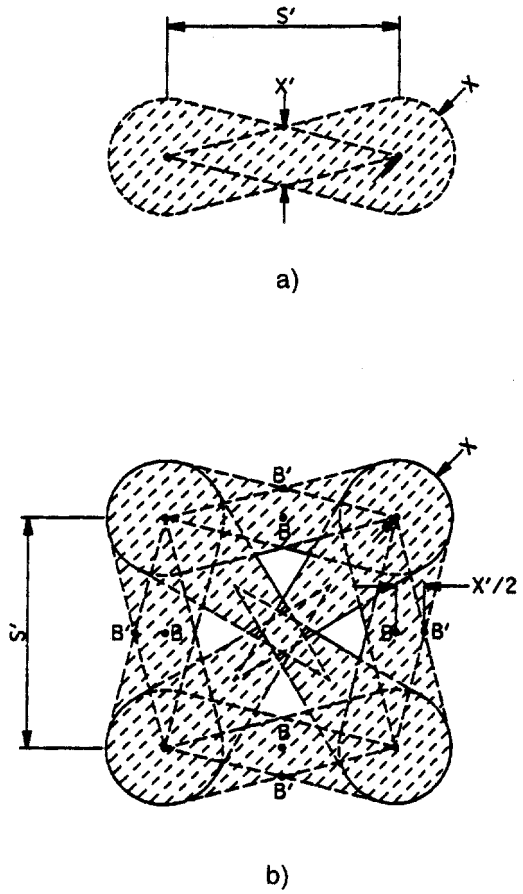

Source: Adapted from [B94]

Figure 4-16 —Areas protected by multiple masts for point exposures shown in figures 4-5 and 4-9 or 4-6 and 4-10 (S'=0.5*S* in figure 4-15)
(a) With two lightning masts
(b) With four lightning masts

It was previously stated that it is only necessary to provide shielding for the equipment from all lightning strokes greater than I_s that would result in a flashover of the buswork. Strokes less than I_s are permitted to enter the protected zone since the equipment can withstand voltages below its BIL design level.

This will be illustrated by considering three levels of stroke current; I_s, stoke currents greater than I_s, and stroke current less than I_s. First, let us consider the stroke current I_s.

5.3.1 Protection against stroke current I_s

I_s is calculated from Eq 5-2 as the current producing a voltage the insulation will just withstand. Substituting this result in Eq 5-1 gives the striking distance S for this stroke current.

In 1977, Ralph H. Lee developed a simplified technique for applying the electromagnetic theory to the shielding of buildings and industrial plants [B48], [B49], [B50]. J.T. Orrell extended the technique to specifically cover the protection of electric substations [B74]. The technique developed by Lee has come to be known as the *rolling sphere* method. For the following illustration, the *rolling sphere* method will be used. This method employs the simplifying

Copyright © 1996 IEEE All Rights Reserved

Copyright The Institute of Electrical and Electronics Engineers, Inc.
Provided by IHS under license with IEEE
No reproduction or networking permitted without license from IHS Not for Resale

assumption that the striking distances to the ground, a mast, or a wire are the same. With this exception, the rolling sphere method has been updated in accordance with the revised EGM described in 5.2.

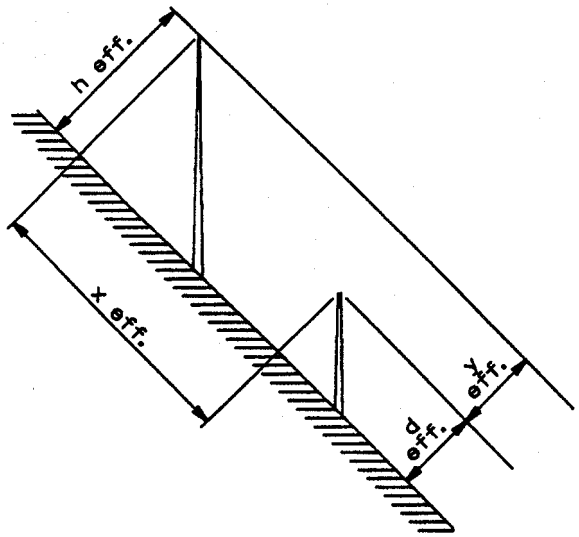

Source: Adapted from [B94]

Figure 4-17 —Effect of hillsides

Use of the *rolling sphere* method involves rolling an imaginary sphere of radius *S* over the surface of a substation. The sphere rolls up and over (and is supported by) lightning masts, shield wires, substation fences, and other grounded metallic objects that can provide lightning shielding. A piece of equipment is said to be protected from a direct stroke if it remains below the curved surface of the sphere by virtue of the sphere being elevated by shield wires or other devices. Equipment that touches the sphere or penetrates its surface is not protected. The basic concept is illustrated in figure 5-3.

Continuing the discussion of protection against stroke current I_s, consider first a single mast. The geometrical model of a single substation shield mast, the ground plane, the striking distance, and the zone of protection are shown in figure 5-4. An arc of radius S that touches the shield mast and the ground plane is shown in figure 5-4. All points below this arc are protected against the stroke current I_s. This is the protected zone.

The arc is constructed as follows (see figure 5-4). A dashed line is drawn parallel to the ground at a distance *S* (the striking distance as obtained from Eq 5-1) above the ground plane. An arc of radius *S*, with its center located on the dashed line, is drawn so the radius of the arc just touches the mast. Stepped leaders that result in stroke current I_s and that descend outside of the point where the arc is tangent to the ground will strike the ground. Stepped leaders that result in stroke current I_s and that descend inside the point where the arc is tangent to the ground will strike the shield mast, provided all other objects are within the protected zone. The height of the shield mast that will provide the maximum zone of protection for stroke currents equal to I_s is *S*. If the mast height is less than *S*, the zone of protection will be reduced. *Increasing the shield mast height greater than S will provide additional protection in the case of a single mast. This is not necessarily true in the case of multiple masts and shield wires.*

Copyright © 1996 IEEE All Rights Reserved

Copyright The Institute of Electrical and Electronics Engineers, Inc.
Provided by IHS under license with IEEE
No reproduction or networking permitted without license from IHS
Not for Resale

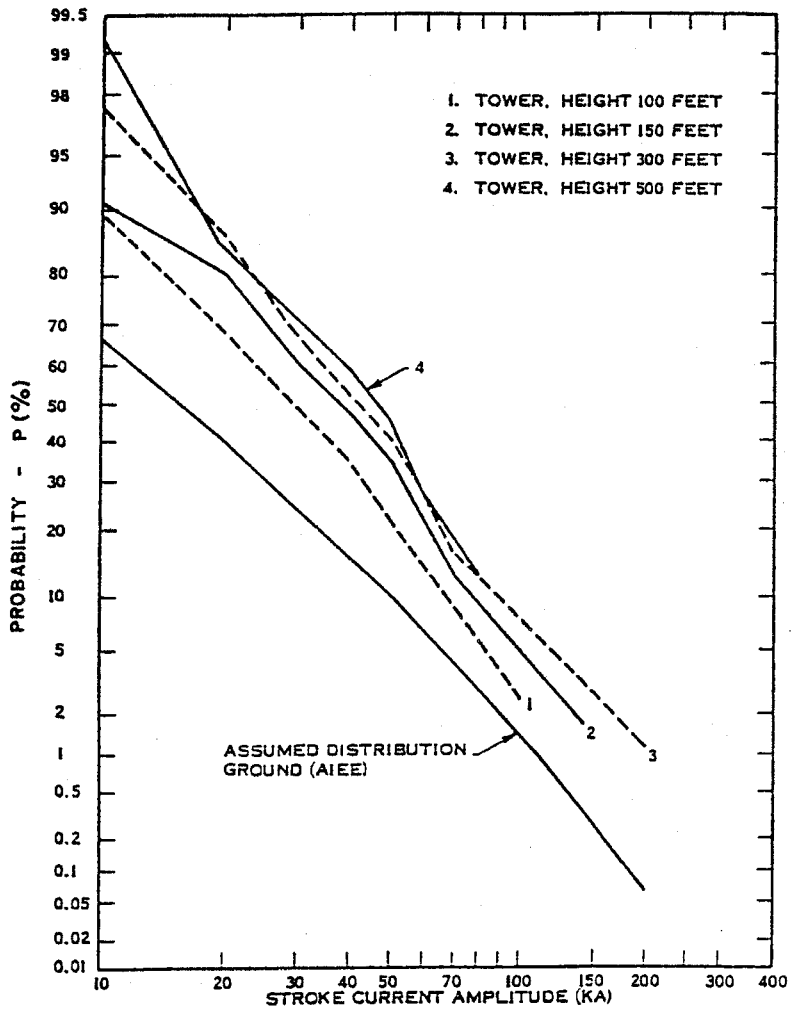

Source: [B84]

Figure 5-1 —Effect of height of structure on frequency distribution of lightning current amplitudes according to Sargent

The protection zone can be visualized as the surface of a sphere with radius *S* that is rolled toward the mast until touching the mast. As the sphere is rolled around the mast, a three-dimensional surface of protection is defined. It is this concept that has led to the name *rolling sphere* for simplified applications of the electrogeometric model.

5.3.2 Protection against stroke currents greater than I_s

Subclause 5.3.1 demonstrated the protection provided for a stroke current I_s. A lightning stroke current has an infinite number of possible magnitudes, however, and the substation designer will want to know if the system provides protection at other levels of stroke current magnitude.

Copyright © 1996 IEEE All Rights Reserved

Copyright The Institute of Electrical and Electronics Engineers, Inc.
Provided by IHS under license with IEEE
No reproduction or networking permitted without license from IHS Not for Resale

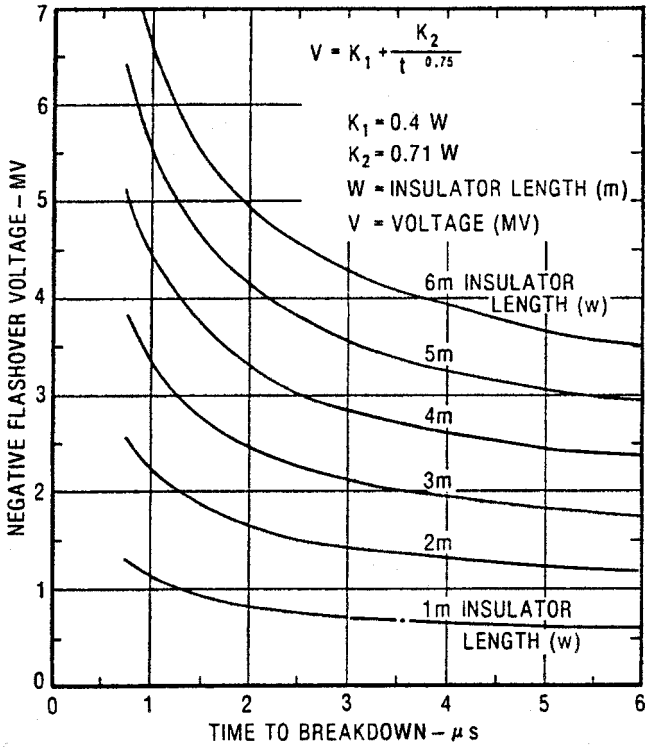

Source: [B26]

Figure 5-2 —Volt-time curves for insulator strings

Consider a stroke current I_{s1} with magnitude greater than I_s. Strike distance, determined from Eq 5-1, is S_1. The geometrical model for this condition is shown in figure 5-5. Arcs of protection for stroke current I_{s1} and for the previously discussed I_s are both shown. The figure shows that the zone of protection provided by the mast for stroke current I_{s1} is greater than the zone of protection provided by the mast for stroke current I_s.

Stepped leaders that result in stroke current I_{s1} and that descend outside of the point where the arc is tangent to the ground will strike the ground. Stepped leaders that result in stroke current I_{s1} and that descend inside the point where the arc is tangent to the ground will strike the shield mast, provided all other objects are within the S_1 protected zone. Again, the protective zone can be visualized as the surface of a sphere touching the mast. In this case, the sphere has a radius S_1.

5.3.3 Protection against stroke currents less than I_s

It has been shown that a shielding system that provides protection at the stroke current level I_s provides even better protection for larger stroke currents. The remaining scenario to examine is the protection afforded when stroke currents are less than I_s.

Consider a stroke current I_{so} with magnitude less than I_s. The striking distance, determined from Eq 5-1, is S_o. The geometrical model for this condition is shown in figure 5-6. Arcs of protection for stroke current I_{so} and I_s are both shown. The figure shows that the zone of protection provided by the mast for stroke current I_{so} is less than the zone of protection provided by the mast for stroke current I_s. It is noted that a portion of the equipment protrudes above the dashed arc or zone of protection for stroke current I_{so}. Stepped leaders that result in stroke current I_{so} and that descend outside of the point where the arc is tangent to the ground will strike the ground. However, some stepped leaders that

Copyright © 1996 IEEE All Rights Reserved

Copyright The Institute of Electrical and Electronics Engineers, Inc.
Provided by IHS under license with IEEE
No reproduction or networking permitted without license from IHS
Not for Resale

result in stroke current I_{so} and that descend inside the point where the arc is tangent to the ground could strike the equipment. This is best shown by observing the plan view of protective zones shown in figure 5-6. Stepped leaders for stroke current I_{so} that descend inside the inner protective zone will strike the mast and protect equipment that is h in height. Stepped leaders for stroke current I_{so} that descend in the shaded unprotected zone will strike equipment of height h in the area. *If, however, the value of* I_s *was selected based on the withstand insulation level of equipment used in the substation, stroke current* I_{so} *should cause no damage to equipment.*

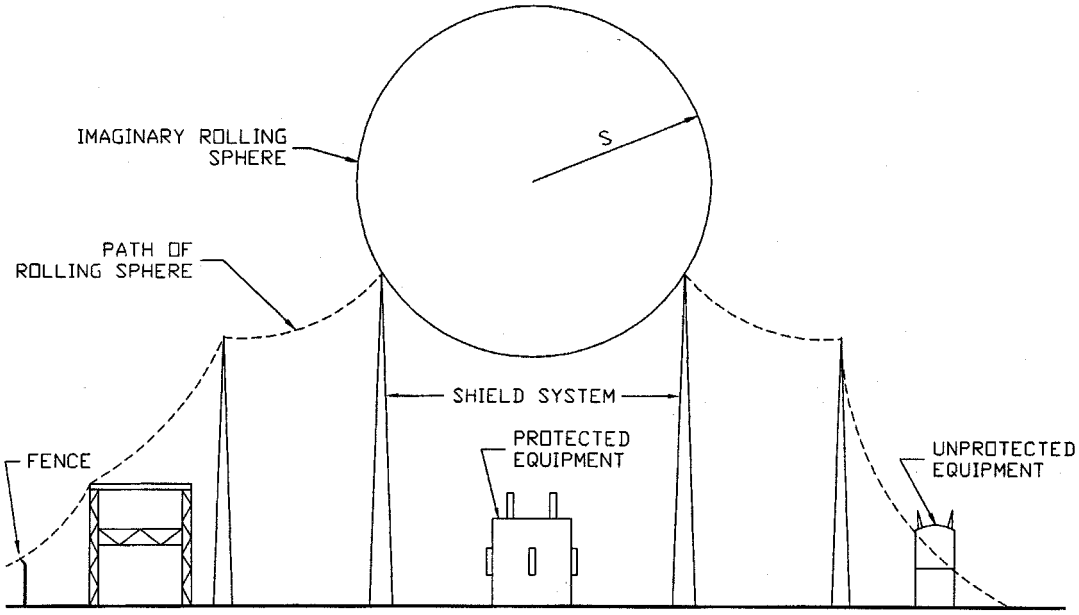

Figure 5-3 —Principle of rolling sphere

5.3.4 Multiple shielding electrodes

The electrogeometric modeling concept of direct stroke protection has been demonstrated for a single shield mast. A typical substation, however, is much more complex. It may contain several voltage levels and may utilize a combination of shield wires and lightning masts in a three-dimensional arrangement.

The above concept can be applied to multiple shielding masts, horizontal shield wires, or a combination of the two. Figure 5-7 shows this application considering four shield masts in a multiple shield mast arrangement. The arc of protection for stroke current I_s is shown for each set of masts. The dashed arcs represent those points at which a descending stepped leader for stroke current I_s will be attracted to one of the four masts. The protected zone between the masts is defined by an arc of radius S with the center at the intersection of the two dashed arcs. The protective zone can again be visualized as the surface of a sphere with radius S, which is rolled toward a mast until touching the mast, then rolled up and over the mast such that it would be supported by the masts. The dashed lines would be the locus of the center of the sphere as it is rolled across the substation surface. Using the concept of rolling sphere of the proper radius, the protected area of an entire substation can. be determined. This can be applied to any group of different height shield masts, shield wires, or a combination of the two. Figure 5-8 shows an application to a combination of masts and shield wires.

Copyright © 1996 IEEE All Rights Reserved

Copyright The Institute of Electrical and Electronics Engineers, Inc.
Provided by IHS under license with IEEE
No reproduction or networking permitted without license from IHS Not for Resale

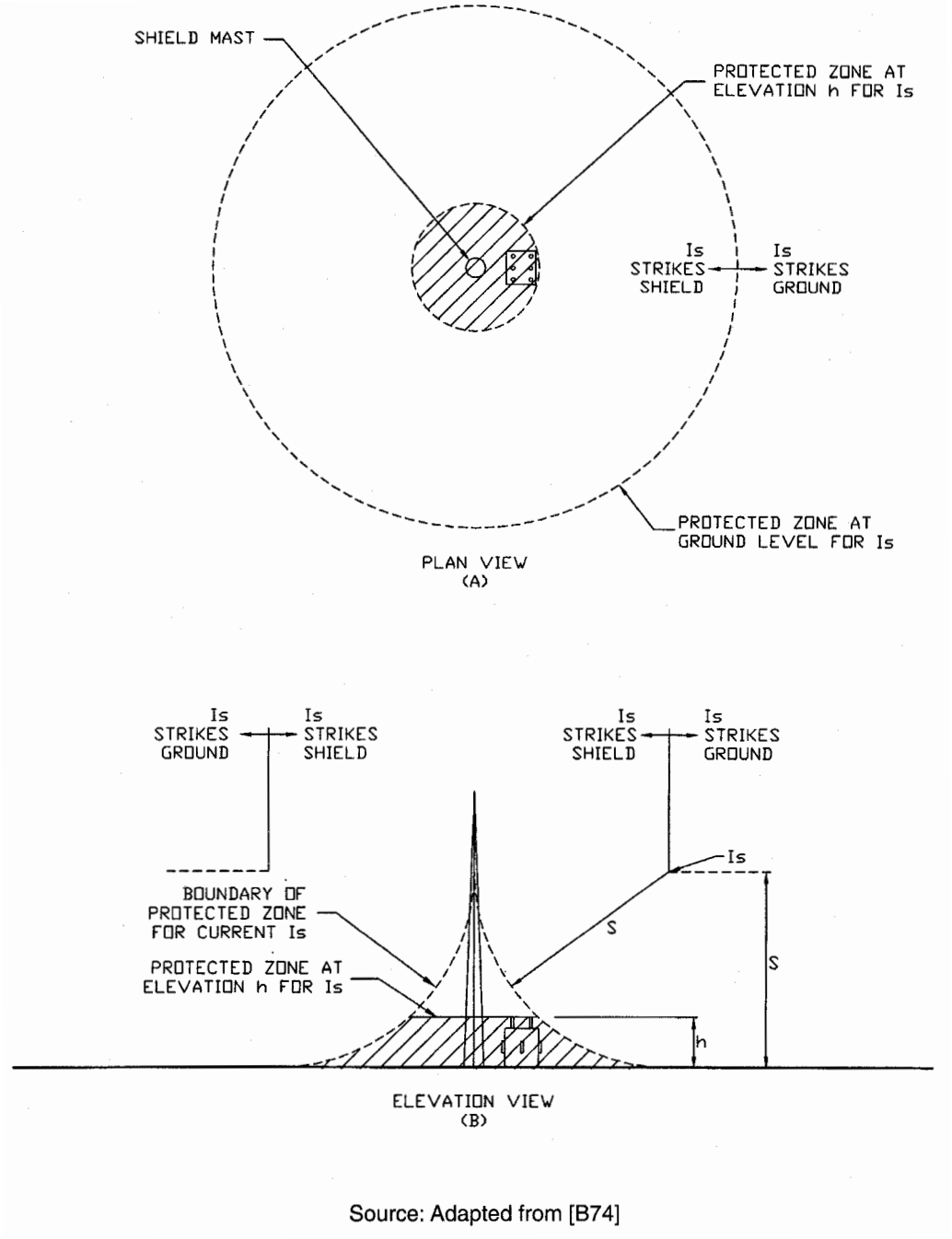

Source: Adapted from [B74]

Figure 5-4 —Shield mast protection for stroke current I_s

Copyright © 1996 IEEE All Rights Reserved

Copyright The Institute of Electrical and Electronics Engineers, Inc.
Provided by IHS under license with IEEE
No reproduction or networking permitted without license from IHS
Not for Resale

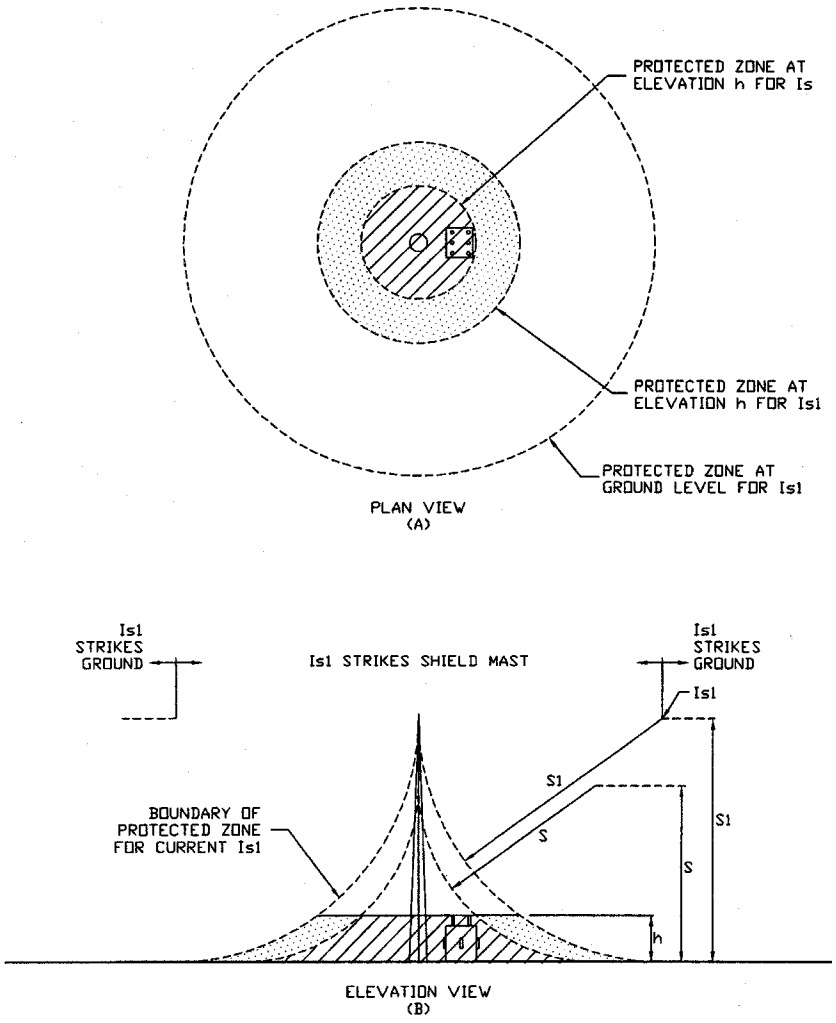

Source: Adapted from [B74]

Figure 5-5 —Shield mast protection for stroke current I_{s1}

Copyright © 1996 IEEE All Rights Reserved

Copyright The Institute of Electrical and Electronics Engineers, Inc.
Provided by IHS under license with IEEE
No reproduction or networking permitted without license from IHS
Not for Resale

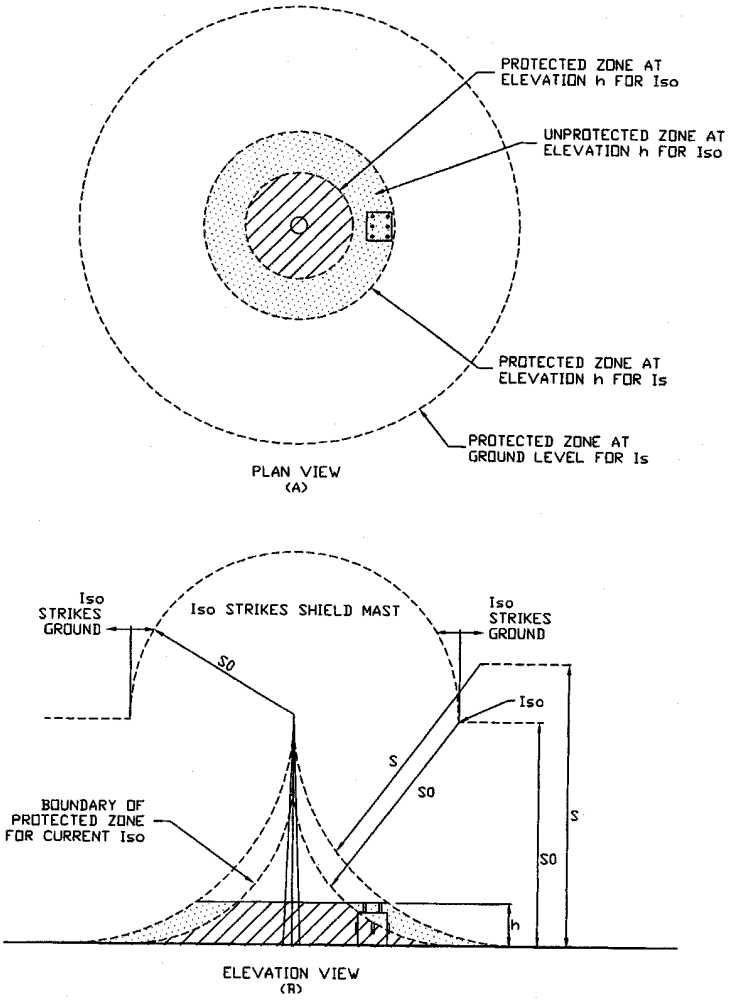

Source: Adapted from [B74]

Figure 5-6 —Shield mast protection for stroke current I_{so}

5.3.5 Changes in voltage level

Protection has been illustrated with the assumption of a single voltage level. Substations, however, have two or more voltage levels. The rolling sphere method is applied in the same manner in such cases, except that the sphere radius would increase or decrease appropriate to the change in voltage at a transformer. *(Example calculations for a substation with two voltage levels are given in annex B.)*

5.3.6 Minimum stroke current

The designer will find that shield spacing becomes quite close at voltages of 69 kV and below. It may be appropriate to select some minimum stroke current, perhaps 2 kA for shielding stations below 115 kV. Such an approach is justified by an examination of figures 2-4 and 2-5. It will be found that 99.8% of all strokes will exceed 2 kA. Therefore, this limit will result in very little exposure, but will make the shielding system more economical.

5.4 Application of revised EGM by Mousa and Srivastava method

The rolling sphere method has been used in the preceding subclauses to illustrate application of the EGM. Mousa describes the application of the revised EGM [B60.] Figure 5-9 depicts two shield wires, $G_{1,}$ and $G_{2,}$ providing shielding for three conductors, W_1, $W_{2,}$ and $W_{3.}$ S_c is the critical striking distance as determined by Eq 5-1A, but

Copyright © 1996 IEEE All Rights Reserved

Copyright The Institute of Electrical and Electronics Engineers, Inc.
Provided by IHS under license with IEEE
No reproduction or networking permitted without license from IHS
Not for Resale

reduced by 10% to allow for the statistical distribution of strokes so as to preclude any failures. Arcs of radius S_c are drawn with centers at G_1, G_2, and W_2 to determine if the shield wires are positioned to properly shield the conductors. The factor ψ is the horizontal separation of the outer conductor and shield wire, and b is the distance of the shield wires above the conductors. Figure 5-10 illustrates the shielding provided by four masts. The height h_{mid} at the center of the area is the point of minimum shielding height for the arrangement. For further details in the application of the method, see [B60].

At least two computer programs have been developed that assist in the design of a shielding system. One of these programs [B71] uses the revised EGM to compute the surge impedance, stroke current, and striking distance for a given arrangement of conductors and shield systems, then advises the user whether or not effective shielding is provided. Sample calculations are provided in annex B to further illustrate the application.

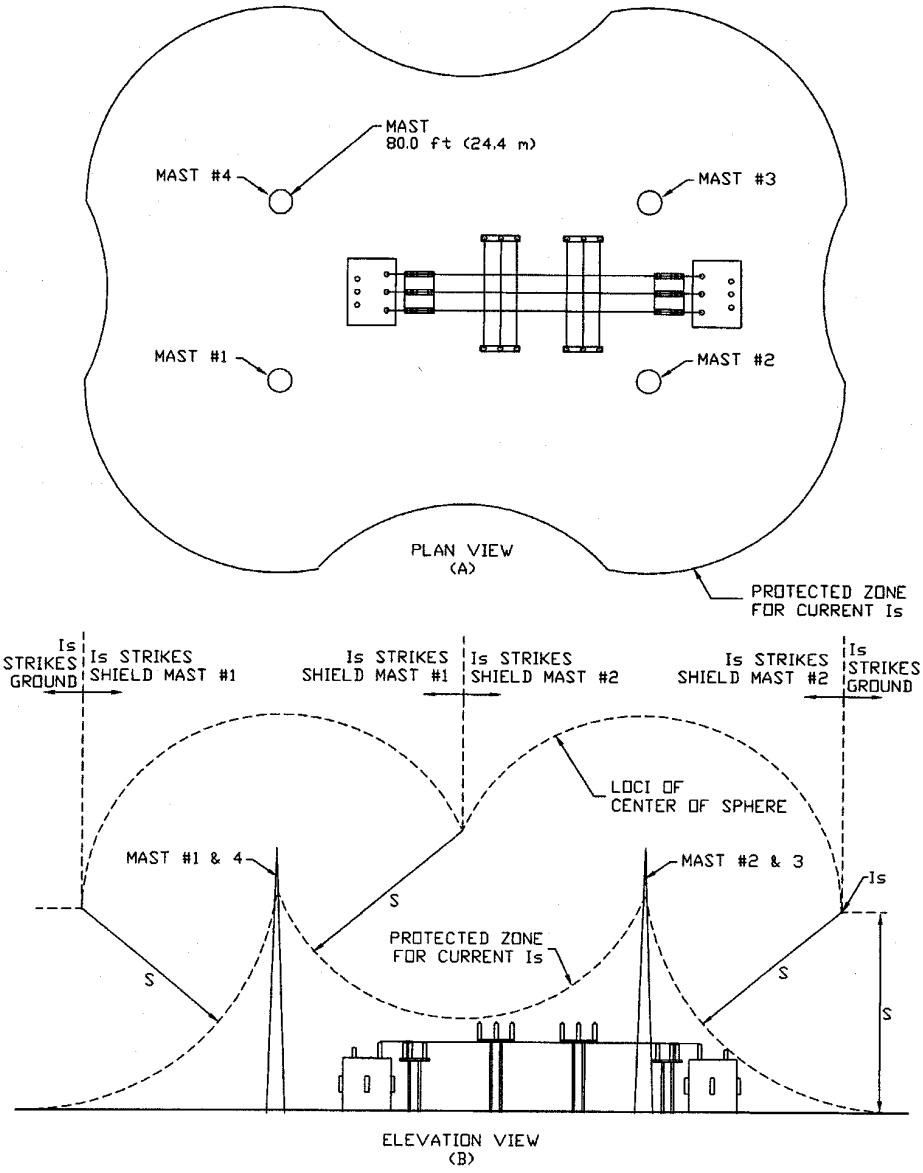

Source: Adapted from [B74]

Figure 5-7 —Multiple shield mast protection for stroke current I_s

Copyright © 1996 IEEE All Rights Reserved

Copyright The Institute of Electrical and Electronics Engineers, Inc.
Provided by IHS under license with IEEE
No reproduction or networking permitted without license from IHS
Not for Resale

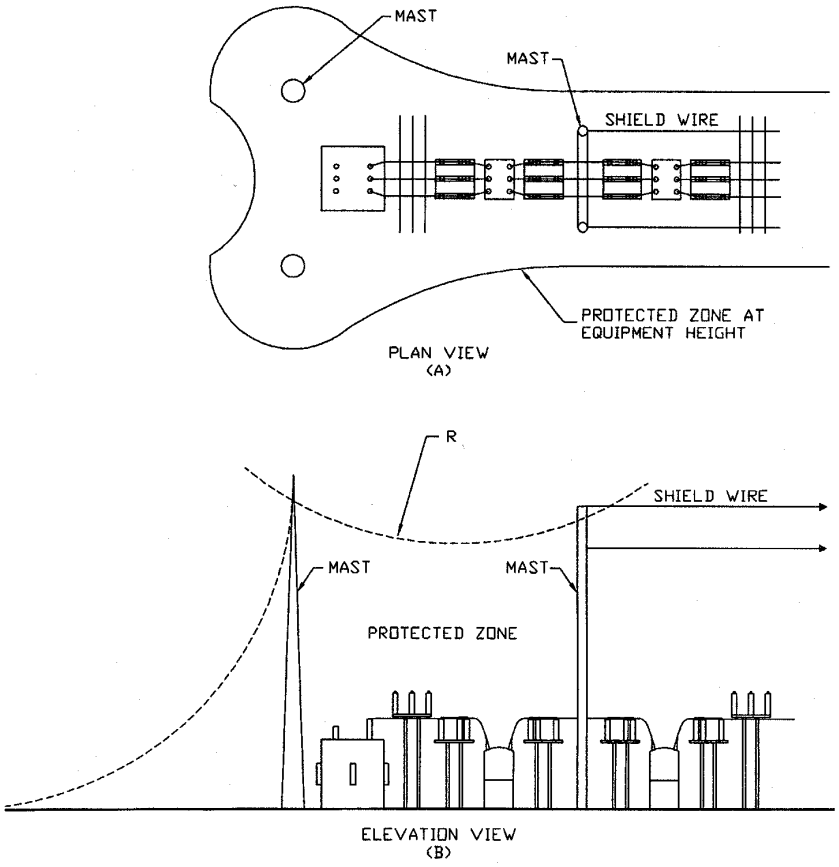

Figure 5-8 —Protection by shield wires and masts

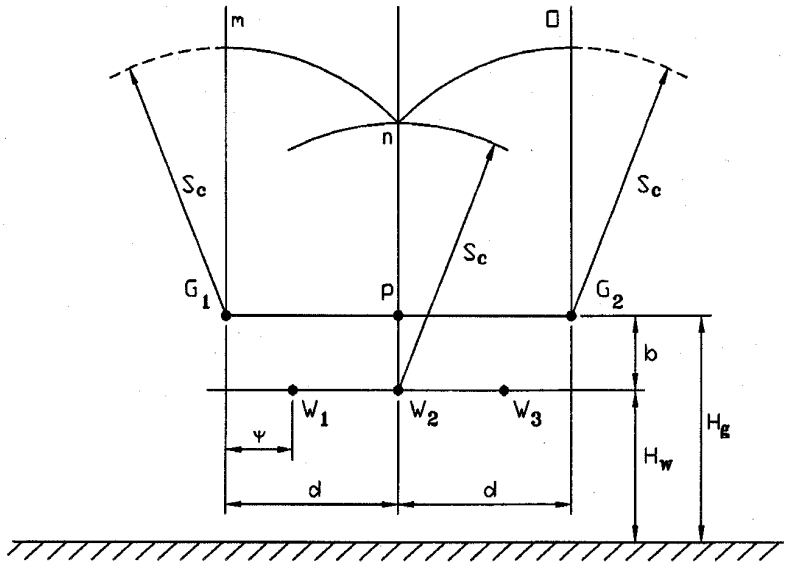

Source: [B60]

Figure 5-9 —Shielding requirements regarding the strokes arriving between two shield wires

Copyright © 1996 IEEE All Rights Reserved

Copyright The Institute of Electrical and Electronics Engineers, Inc.
Provided by IHS under license with IEEE
No reproduction or networking permitted without license from IHS
Not for Resale

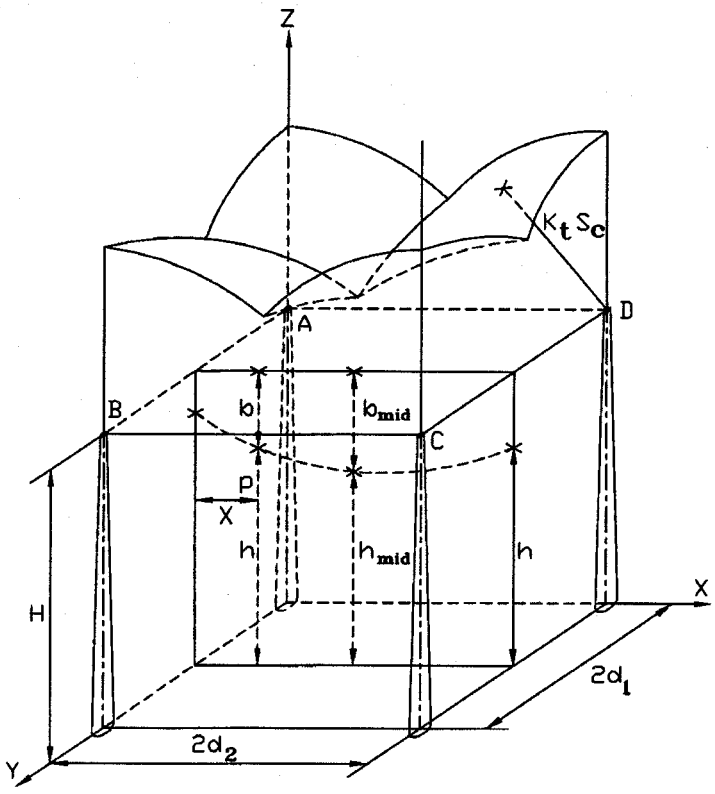

Source: [B60]

Figure 5-10 —Shielding of an area bounded by four masts

5.5 Calculation of failure probability

In the revised EGM just presented, striking distance is reduced by a factor of 10% so as to exclude all strokes from the protected area that could cause damage. In the Empirical design approach of clause 4, on the other hand, a small failure rate is permitted. Linck [B53] also developed a method to provide partial shielding using statistical methods.

It should be pointed out that for the statistical approach to be valid, the size of the sample needs to be large. For power lines that extend over large distances, the total exposure area is large and the above criterion is met. It is questionable, therefore, whether the statistical approach is as meaningful for substations that have very small exposure areas by comparison.

Engineers do, however, design substation shielding that permits a small statistical failure rate. Orrell [B74] has developed a method of calculating failure rates for the EGM rolling sphere method. This can be found in annexes D and G.

6. Active lightning terminals

In the preceding methods described in clauses 4 and 5, the lightning terminal is considered to be a *passive* element that intercepts the stroke merely by virtue of its position with respect to the live bus or equipment. Suggestions have been

Copyright © 1996 IEEE All Rights Reserved

Copyright The Institute of Electrical and Electronics Engineers, Inc.
Provided by IHS under license with IEEE
No reproduction or networking permitted without license from IHS Not for Resale

made that lightning protection can be improved by using what may be called *active* lightning terminals. Three types of such devices have been proposed over the years:

a) *Lightning rods with radioactive tips* [B36]. These devices are said to extend the attractive range of the tip through ionization of the air.

b) *Early Streamer Emission (ESM) lightning rods* [B11]. These devices contain a triggering mechanism that sends high-voltage pulses to the tip of the rod whenever charged clouds appear over the site. This process is said to generate an upward streamer that extends the attractive range of the rod.

c) *Lightning prevention devices*. These devices enhance the *point discharge* phenomenon by using an array of needles instead of the single tip of the standard lightning rod. It is said that the space charge generated by the many needles of the array neutralize part of the charge in an approaching cloud and prevent a return stroke to the device, effectively extending the protected area [B18].

Some of the latter devices have been installed on facilities (usually communications towers) that have experienced severe lightning problems. The owners of these facilities have reported no further lightning problems in many cases.

There has not been sufficient scientific investigation to demonstrate that the above devices are effective, and since these systems are proprietary, detailed design information is not available. It is left to the design engineer to determine the validity of the claimed performance for such systems. It should be noted that IEEE does not recommend or endorse commercial offerings.

7. Bibliography

[B1] AIEE Committee, "A method of estimating lightning performance of transmission lines," *AIEE Transactions*, vol. 69, pt. 2, pp. 1187–1196, 1950.

[B2] Alizade, A. A., Muslimov, M. M., and Khydyrov, E L., "Study of Electric Field Strength Due to Lightning Stroke Currents," *Electric Technology USSR*, 1976, no. 4, pp. 51–56.

[B3] Anderson, J. G., "Monte Carlo computer calculation of transmission-line lightning performance," *AIEE Transactions*, vol. 80, pp. 414–420, Aug. 1961.

[B4] Anderson, J. G., Chapter 12 of *Transmission Line Reference Book 345 kV and Above*, 2nd Ed. Rev. Palo Alto, Calif.: Electric Power Research Institute, 1987.

[B5] Anderson, R. B., and Eriksson, A. J., "Lightning Parameters for Engineering Application," *Electra*, no. 69, pp. 65–102, Mar. 1980.

[B6] Berger, K, "Novel Observations on Lightning Discharges: Results of Research on Mount San Salvatore," *Journal of the Franklin Institute*, vol. 283, no. 6, pp. 478–525, June 1967.

[B7] Berger, K., "Discussion of Group 33 on Lightning and Surges," *CIGRE Proceedings*, vol. 2, pp. 2, 10–11, 1968.

[B8] Berger, K, "The Earth Flash," Chapter 5 in Golde, R. H. (Ed.), *Lightning*, vol. 1, London: Academic Press, 1977.

[B9] Berger, K, and Vogelsanger, E., "New Results of Lightning Observations," CIGRE Paper no. 33–03, 11 pages (in vol. 2), 1968.

[B10] Berger, K., Anderson, R. B., and Kroninger, H., "Parameters of Lightning Flashes," *ELECTRA*, no. 41, pp. 23–37, July 1975.

Copyright © 1996 IEEE All Rights Reserved

Copyright The Institute of Electrical and Electronics Engineers, Inc.
Provided by IHS under license with IEEE
No reproduction or networking permitted without license from IHS Not for Resale

[B11] Berger, G., and Floret, N., "Collaboration Produces a New Generation of Lightning Rods," *Power Technology International*, pp. 185–190, London: Sterling Publications, 1991.

[B12] Bibliography of Publications Pertaining to Lightning Protection, IEEE Transmission Substation Subcommittee, *IEEE Transactions on Power Apparatus and Systems*, vol. PAS-94, no. 4, pp. 1241–1247, July/Aug. 1975.

[B13] Braunstein, A., "Lightning strokes to power transmission lines and the shielding effect of ground wires," *IEEE Transactions on Power Apparatus Systems*, vol. PAS-89, pp. 1900–1910, Nov./Dec. 1970.

[B14] Brook, M., and Ogawa, T, "The Cloud Discharge," Chapter 6 in Golde, R. H. (Ed.), *Lightning*, vol. 1, London: Academic Press, 1977.

[B15] Brown, G. W., "Lightning performance II—Updating backflash calculations," *IEEE Transactions on Power Apparatus and Systems*, vol. PAS-97, no. 1, pp. 39–52, 1978.

[B16] Brown, G. W. and Whitehead, E. R., "Field and analytical studies of transmission line shielding: Part II," *IEEE Transactions on Power Apparatus and Systems*, vol. PAS-88, no. 5, pp. 617–626, 1969.

[B17] Burgsdorf, V. V., "Lightning Protection of Overhead Transmission Lines and Operating Experience in the USSR," CIGRE Paper 326, 29 pages, 1958.

[B18] Carpenter, R. B., Jr., "Lightning Elimination." Paper PCI-76-16 given at the 23rd Annual Petroleum and Chemical Industry Conference 76CH1109-8-IA.

[B19] Changery, M. J., "National Thunderstorm Frequencies for the Contiguous United States," Report no. NUREG/CR-2252, *National Oceanic and Atmospheric Administration*, Ashville, NC, Nov. 1981.

[B20] "Charge Dissipation Gives, For the First Time, Lightning Prevention." *Broadcast Management Engineering*, Sept. 1972.

[B21] Cianos, N., Pierce, E. T., "A Ground-Lightning Environment for Engineering Usage." Stanford Research Institute, Technical Report 1, Aug. 1972.

[B22] "CIGRE Sums up Lightning Research." *Electrical World*, vol. 194(2), pp. 72–75, July 15, 1980.

[B23] Clayton, J. M. and Young, F. S., "Estimating lightning performance of transmission lines," *IEEE Transactions on Power Apparatus and Systems*, vol. PAS-83, pp. 1102–1110, 1964.

[B24] Cobine, J. D., "Gaseous Conductors, Theory and Engineering Application." New York: Dove, 1952.

[B25] Dainwood, W. H. and Kercel, S. W., "An analytical approach to the design of a three-dimensional array of overhead shield wires," IEEE Conference Paper no. C75 044-3, 1975.

[B26] Darveniza, M., Popolansky, F., and Whitehead, E. R., "Lightning Protection of UHV Transmission Lines," *Electra*, no. 41, pp. 39–69, July 1975.

[B27] Eriksson, A. J., "Lightning and Tall Structures," *Trans. South African IEE*, vol. 69, no. 8, pp. 238–252, Aug. 1978. Discussion and Closure published May 1979, vol. 70, no. 5, 12 pages.

[B28] Eriksson, A. J., "The incidence of lightning strikes to power lines," *IEEE Transactions on Power Delivery*, vol. PWRD-2, no. 3, pp. 859–870, 1987.

[B29] Eriksson, A.J., "An improved electrogeometric model for transmission line shielding analysis," *IEEE Transactions on Power Delivery*, vol. PWRD-2, no,3, pp. 871–886.

[B30] Fink, D. B., Beaty H.W., *Standard Handbook for Electrical Engineers*, 11th ed. New York: McGraw-Hill, 1978.

 Copyright © 1996 IEEE All Rights Reserved

Copyright The Institute of Electrical and Electronics Engineers, Inc.
Provided by IHS under license with IEEE
No reproduction or networking permitted without license from IHS Not for Resale

[B31] Fujitaka, S., Tomiyama, J., Hirose, Y., and Issiki, T., "Investigation on Lightning Protection for Electric Power System in Japan," CIGRE Paper no. 323, 1958, 21 pages.

[B32] Giffard, W. F. and Owens, J.J., "Optimizing Substation Shielding," Presented at *Sixth Annual Transmission and Substation Design and Operating Symposium*, University of Texas at Arlington, Sept. 1973.

[B33] Gilman D. W. and Whitehead, E. R., "The Mechanism of Lightning Flashover on High Voltage and Extra-High Voltage Transmission Lines," *Electra*, no. 27, pp. 65–96, Mar. 1973.

[B34] Golde, R. H., "The Validity of Lightning Tests with Scale Models," *Journal IEE* vol. 88, pt. 2, no. 2, pp. 67–68, 1941.

[B35] Golde, R. H., "The Frequency of Occurrence and the Distribution of Lightning Flashes to Transmission Lines." *AIEE Transactions*, vol. 64, pp. 902–910, 982–984, 1945.

[B36] Golde, R.H., "Radio-Active" Lightning Conductors, *Lightning Protection*, London: Edward Arnold Publishing Co., pp. 37–40, 196–197, 1973.

[B37] Golde, R. H., "Lightning Protection of Tall Structures, *Review of Lightning, Protection Technology for Tall Structures*, Office of Naval Research, Arlington, Virginia, Publication no. AD-A075 449, pp. 243–249 of Hughes, J. (Ed.), 1977.

[B38] Golde, R. H., "Lightning Conductor," Chapter 17 in Golde, R. H. (Ed.), *Lightning*, vol. 2, Academic Press: London, 1977.

[B39] Gorin, B. N., Levitov, V. I., and Shkilev, A. V., "Lightning Strokes on Ostankino TV Tower in Moscow," *Electric Technology USSR*, no. 3, pp. 45–55, 1977.

[B40] Heary, K. P. et al., "An experimental study of ionizing air terminal performance," *IEEE Transactions on Power Delivery*, vol. PWRD-4, no. 2, pp. 1175–1184, 1989.

[B41] Hepworth, J. K., Klewe, R. C., Lobley, E. H., and Tozer, B. A., "The effect of A.C. bias fields on the impulse strength of point-plane and sphere-plane gaps," *IEEE Transactions on Power Apparatus and Systems*, vol. PAS-92, no. 6, pp. 1898–1903, 1973. Discussion by Freser, K.

[B42] Horvath, Tibor, *Computation of Lightning Protection*, Taunton, Somerset, England: Research Studies Press Ltd, pp. 22, 23, 76, 77, 92, 93, 144–147, 1991.

[B43] IEEE Working Group, "Guide for application of insulators to withstand switching surges," *IEEE Transactions on Power Apparatus and Systems*, vol. PAS-94, no. 1, pp. 58–67, 1975.

[B44] IEEE Std 100-1992 The New IEEE Standard Dictionary of Electrical and Electronics Terms (ANSI).

[B45] IEEE Std C62.22-1991 IEEE Guide for the Application of Metal-Oxide Surge Arresters for Alternating-Current Systems (ANSI).

[B46] IEEE Working Group, "A simplified method for estimating lightning performance of transmission lines," *IEEE Transactions on Power Apparatus and Systems*, vol. PAS-104, no. 4, pp. 919–932, 1985.CAUTION CAUTION CAUTION CAUTION NEW BIB [46a] IEEE Working Group, "Estimating lightning performance of transmission lines II—Updates to analytic models," *IEEE Transactions on Power Delivery*, vol. 8, No. 3, pp. 1254–1267, July 1993.

[B47] IEEE Std 4-1995 IEEE Standard Techniques for High-Voltage Testing (ANSI).

[B48] Lee R. H., "Protect Your Plant Against Lightning," *Instruments and Control Systems*, vol. 55, no. 2, pp. 31–34, Feb. 1982.

Copyright © 1996 IEEE All Rights Reserved

Copyright The Institute of Electrical and Electronics Engineers, Inc.
Provided by IHS under license with IEEE
No reproduction or networking permitted without license from IHS Not for Resale

[B49] Lee, R. H., "Lightning Protection of Buildings." *IEEE Transactions on Industry Applications*, vol. IA-15, no. 3, pp. 236–240, May/June 1979.

[B50] Lee, R. H., "Protection zone for buildings against lightning strokes using transmission line protection practice." *IEEE Transactions on Industry Applications*, vol. 1A-14, no. 6, pp. 465–470, 1978.

[B51] "Lightning protection in multi-line stations," IEEE Committee Report, *IEEE Transactions on Power Apparatus and Systems*, vol. PAS-87, no. 6, pp. 1514–1521, June 1968.

[B52] Linck, H., "Discussion of the frequency distribution of current magnitudes of lightning strokes to tall structures," *IEEE Transactions on Power Apparatus and Systems*, vol. PAS-91, no. 5, pp. 2228–2229, 1972.

[B53] Linck, H., "Shielding of modern substations against direct lightning strokes," *IEEE Transactions on Power Apparatus and Systems*, vol. PAS-90, no. 5, pp. 1674–1679, Sept./Oct. 1975.

[B54] MacGorman, D. R., et al., "Lightning Strike Density for the Contiguous United States from Thunderstorm Duration Record," Report no. NUREG/CR-3759, *National Oceanic and Atmospheric Administration*, Norman, OK, May 1984.

[B55] MacGorman, D. R., and Rust, W. D., "An Evaluation of the LLP and LPATS Lightning Ground Strike Mapping Systems," pp. 235–240 of Addendum of *Proceedings of International Aerospace and Ground Conference on Lightning and Static Electricity*, Oklahoma City, OK, Apr. 1988.

[B56] McEachron, K. B, "Lightning to the Empire State Building," *Journal of the Franklin Institute*, vol. 227, no. 2, pp. 149–217, Feb. 1939.

[B57] Melander, B. G, "Atmospheric Electricity Threat Definition for Aircraft Lightning Protection," *Proceedings of International Aerospace and Ground Conference on Lightning and Static Electricity*, Forth Worth, TX, Paper no. 36, 1983, 37 pages.

[B58] Melander, B. G., "Effects of Tower Characteristics on Lightning Arc Measurements," *Proceedings of International Aerospace and Ground Conference on Lightning and Static Electricity*, Orlando, FL, Paper no. 34, 1984, 12 pages.

[B59] Moore, C. B. and Vonnegut, B., "The Thundercloud," Chapter 3 in Golde, R. H. (Ed.), *Lightning*, vol. 1, London: Academic Press, 1977.

[B60] Mousa, A.M., "Shielding of high-voltage and extra-high-voltage substations," *IEEE Transactions on Power Apparatus and Systems*, vol. PAS-95, no. 4, pp. 1303–1310, 1976.

[B61] Mousa, A. M., "Effect of height of structure on the striking distance of a downward lightning flash," *Proceedings of International Communications and Energy Conference*, Montreal, Quebec, IEEE Publication no. 84CH20412, pp. 9–14, Oct. 1984.

[B62] Mousa, A. M, "Discussion of a simplified method for estimating lightning performance of transmission lines," *IEEE Transactions on Power Apparatus and Systems*, vol. PAS- 104, no. 4, p. 930, 1985.

[B63] Mousa, A.M., "A Study of the Engineering Model of Lightning Strokes and its Application to Unshielded Transmission Lines," Ph.D. Thesis, University of British Columbia, Vancouver, Canada, Aug. 1986.

[B64] Mousa, A.M., and Srivastava, K. D, "Discussion of an improved electrogeometric model for transmission line shielding analysis," *IEEE Transactions on Power Delivery*, vol. PWRD-2, no. 3, pp. 880–881, 1987.

[B65] Mousa, A.M., and Srivastava, K. D., "Discussion of the East Coast lightning detection network," *IEEE Transactions on Power Delivery*, vol. PWRD-2, no. 3, pp. 904–905, 1987.

 Copyright © 1996 IEEE All Rights Reserved

--`,,`-`-`,,`,,`,`,,`---

Copyright The Institute of Electrical and Electronics Engineers, Inc.
Provided by IHS under license with IEEE
No reproduction or networking permitted without license from IHS Not for Resale

[B66] Mousa, A.M., and Srivastava, K. D, "Shielding Tall Structures Against Direct Lightning Strokes," *Proceedings of Canadian Conference on Electrical and Computer Engineering*, Vancouver, British Columbia, ISSN 0840-7789, pp. 28–33, Nov. 1988.

[B67] Mousa, A.M., and Srivastava, K. D., "A Revised Electrogeometric Model for the Termination of Lightning Strokes on Ground Objects," *Proceedings of International Aerospace and Ground Conference on Lightning and Static Electricity*, Oklahoma City, OK, pp. 342–352, Apr. 1988.

[B68] Mousa, A.M., and Srivastava, K. D., "Effect of shielding by trees on the frequency of lightning strokes to power lines," *IEEE Transactions on Power Delivery*, vol. 3, no. 2, pp. 724–732, 1988.

[B69] Mousa, A.M., and Srivastava, K. D., "The lightning performance of unshielded steel-structure transmission lines," *IEEE Transactions on Power Delivery* vol 4, no. 1, pp. 4.37–445, 1989.

[B70] Mousa, A.M., and Srivastava, K. D., "The implications of the electrogeometric model regarding effect of height of structure on the median amplitudes of collected lightning strokes," *IEEE Transactions on Power Delivery*, vol. 4, no. 2, pp. 1450–1460, 1989.

[B71] Mousa, A.M., "A computer program for designing the lightning shielding systems of substations," *IEEE Transactions on Power Delivery*, vol. 6, no. 1, pp. 143–152, 1991.

[B72] Mousa, A.M., and Wehling, R. J., "A survey of industry practices regarding shielding of substations against direct lightning strokes," *IEEE Transactions on Power Delivery*, vol. 8, no. 1, pp. 38–47, 1993 (reproduced in annex E).

[B73] Muller-Hillebrand, D., "On the Frequency of Lightning Flashes to High Objects, A Study on the Gulf of Bothnia," *Tellus*, vol. 12, no. 4, pp. 444–449, 1960.

[B74] Orrell, J. T., "Direct Stroke Lightning Protection," Paper Presented at EEI Electrical System and Equipment Committee Meeting, Washington, D.C., 1988 (reproduced in annex G).

[B75] Orville, R., and Songster, H., "The East Coast lightning detection network," *IEEE Transactions on Power Delivery*, vol. PWRD-2, no. 3, pp. 899ndash;907, 1987.

[B76] Paris, 1., and Cortina, R., "Switching and lightning impulse discharge characteristics of large air gaps and long insulator strings," *IEEE Transactions on Power Apparatus and Systems*, vol. PAS-87, no. 4, pp. 947–957, 1968.

[B77] Paris, L., Taschini, A., Schneider, K. H., and Weck, K. H., "Phase-to-Ground and Phase-to-Phase Air Clearances in Substations," *Electra*, no. 29, pp. 29–44, July 1973.

[B78] Peek, F. W., Jr., *Dielectric Phenomena in High Voltage Engineering*. New York: McGraw-Hill, 1929.

[B79] Popolansky, F., "Measurement of Lightning Currents in Czechoslovakia and the Application of Obtained Parameters in the Prediction of Lightning Outages of EHV Transmission Lines," CIGRE Paper no. 33-03, 1970, 12 pages.

[B80] Powell, K. B., "Chart Simplifies Shielding Low Profile Substations," *Electrical World*, pp. 36–37, Apr. 1977.

[B81] Prentice, S. A., "CIGRE Lightning Flash Counter," *Electra*, no. 22, pp. 149–171, May 1972.

[B82] Prentice, S. A., "Frequency of Lightning Discharges," Chapter 14 in Golde, R. H. (Ed.), *Lightning*, vol. 1, London: Academic Press, 1977.

[B83] "Present Practice Regarding Direct Stroke Shielding in the Lightning Protection of Stations and Substations," AIEE Subcommittee on Lightning Protective Devices, *AIEE Conference Paper*, Jan. 1953.

Copyright © 1996 IEEE All Rights Reserved

Copyright The Institute of Electrical and Electronics Engineers, Inc.
Provided by IHS under license with IEEE
No reproduction or networking permitted without license from IHS
Not for Resale

[B84] Sargent, M. A, "The frequency distribution of current magnitudes of lightning strokes to tall structures," *IEEE Transactions on Power Apparatus and Systems*, vol. PAS-91, no. 5, pp. 2224–2229, 1972.

[B85] Sargent, M. A., "Monte Carlo simulation of the lightning performance of overhead shielding networks of high voltage stations," *IEEE Transactions on Power Apparatus and Systems*, vol. PAS-91, no. 4, pp. 1651–1656, 1972.

[B86] Schonland, B. F. J., and Malan, D. J., "Upward Stepped Leaders from the Empire State Building," *Journal of the Franklin Institute*, vol. 258, no. 4, pp. 271–275, Oct. 1954.

[B87] Snyder, Robert E., "New Protection System May Eliminate Lightning Damage," *World Oil.*, Jan. 1973.

[B88] Sorensen, R. W., and McMaster, R. C., "The influence of towers and conductor sag on transmission line shielding," *AIEE Transactions*, vol. 61, pp. 159–165, 448–450, 1942.

[B89] Suzuki, T, Miyake, K., and Shindo, T, "Discharge path model in model test of lightning strokes to tall mast," *IEEE Transactions on Power Apparatus and Systems*, vol. PAS- 100, no. 7, pp. 3553–3562, 1981.

[B90] Uman, M. A., *Lightning*, Chapter 1. New York: McGraw-Hill, 13 pages, 1969.

[B91] Uman, M. A., Mclain, D. K., Fisher.. R. J., and Krider, E. P., "Currents in Florida Lightning Return Strokes," *Journal Geophysical Research*, vol. 78, no. 18, pp. 3530–3537, 1973.

[B92] Vendall, G. R., and Petrie A. G., "The Frequency of Thunderstorm Days in Canada," Meteorological Division, Department of Transportation, Ottawa, Canada, 1962.

[B93] Wagner, C. E, McCann, G. D. and MacLane, G. L., "Shielding of Transmission Lines," *AIEE Transactions*, vol. 60, pp. 313–328, 612–614, 1941.

[B94] Wagner C.F., McCann, G. D., Lear, C. M., "Shielding of Substations," *AIEE Transactions*, vol. 61, pp. 96–100, 313,448, Feb. 1942.

[B95] Wagner, C. F., *Electrical Transmission and Distribution Reference Book*, 4th ed. Westinghouse Electric Corp, pp. 542–577, 1964.

[B96] Wagner, C.F., McCann, G. D., and Beck, Edward, "Field investigations of lightning." *AIEE Transactions*, vol. 60, pp. 1222–1230, 1941.

[B97] Whitehead, E. R., "Mechanism of Lightning Flashover." EEI Research Project RP 50, Illinois Institute of Technology, Pub 72-900, Feb. 1971.

[B98] Whitehead, E. R., "CIGRE Survey of the Lightning Performance of Extra-High-Voltage Transmission Lines," *Electra*, no. 33, pp. 63–89, Mar. 1974.

[B99] Whitehead, E. R., "Protection of Transmission Lines," Chapter 22 (49 pages) of Golde, R. H. (Ed.), *Lightning*, vol. 2, London: Academic Press, 1977.

[B100] World Distribution of Thunderstorm Days, Part II, World Meteorological Organization, Geneva, Switzerland, 1956.

[B101] Young, E S., Clayton, J. M., and Hileman, A. R., "Shielding of transmission lines," *IEEE Transactions on Power Apparatus and Systems*, vol. S82, pp. 132–154, 1963.

 Copyright © 1996 IEEE All Rights Reserved

Copyright The Institute of Electrical and Electronics Engineers, Inc.
Provided by IHS under license with IEEE
No reproduction or networking permitted without license from IHS Not for Resale

Annex A Empirical shielding curves (Informative)

The following pages contain empirical shielding curves referenced in the guide.

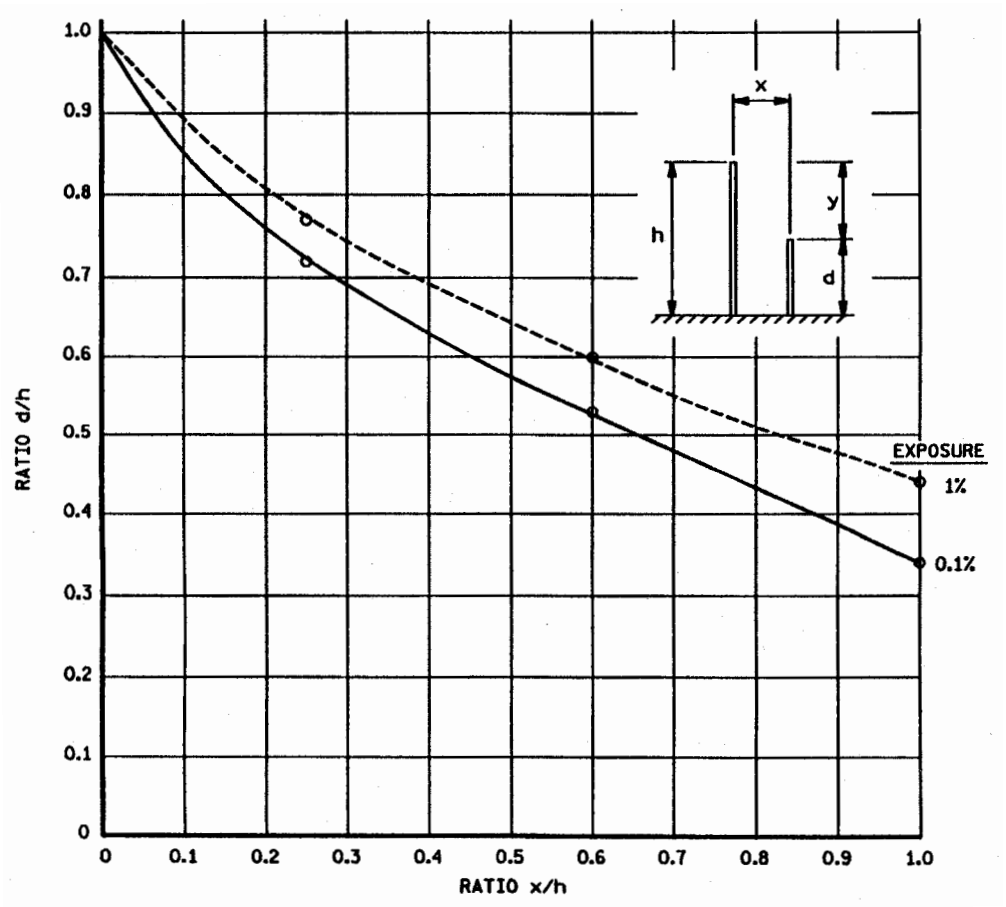

Figure A.1 —Protection of an exposed object by a single lightning mast

Copyright © 1996 IEEE All Rights Reserved

Copyright The Institute of Electrical and Electronics Engineers, Inc.
Provided by IHS under license with IEEE
No reproduction or networking permitted without license from IHS
Not for Resale

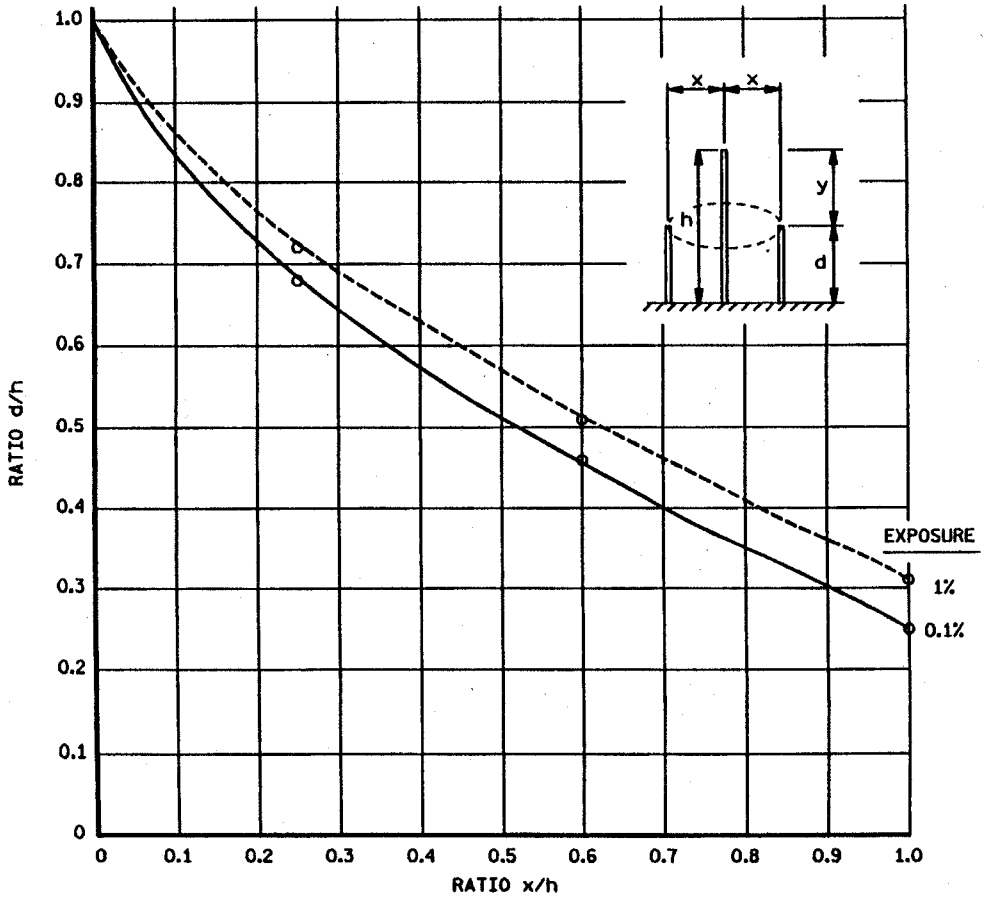

Figure A.2 —Protection of a ring of exposed objects by a single lightning mast

Copyright © 1996 IEEE All Rights Reserved

Copyright The Institute of Electrical and Electronics Engineers, Inc.
Provided by IHS under license with IEEE
No reproduction or networking permitted without license from IHS
Not for Resale

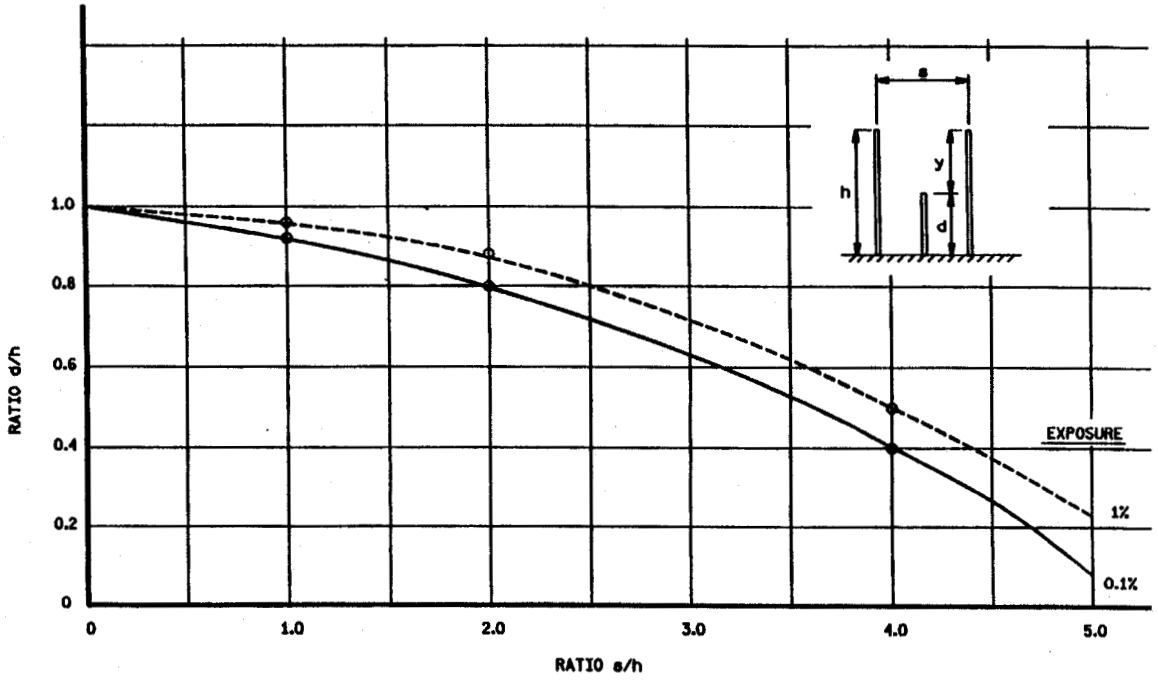

Figure A.3 —Protection of an exposed object by two lightning masts

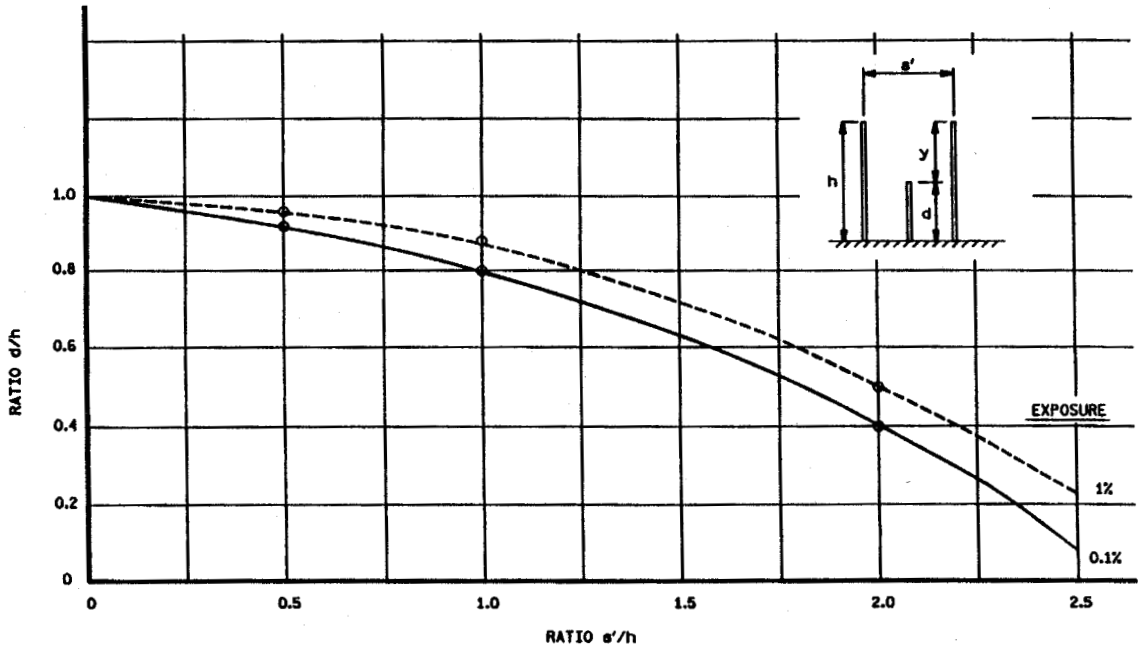

Figure A.4 —Protection of an exposed object by two lightning masts

(Refer to figure 4-16 for areas of protection)

Copyright © 1996 IEEE All Rights Reserved

Copyright The Institute of Electrical and Electronics Engineers, Inc.
Provided by IHS under license with IEEE
No reproduction or networking permitted without license from IHS
Not for Resale

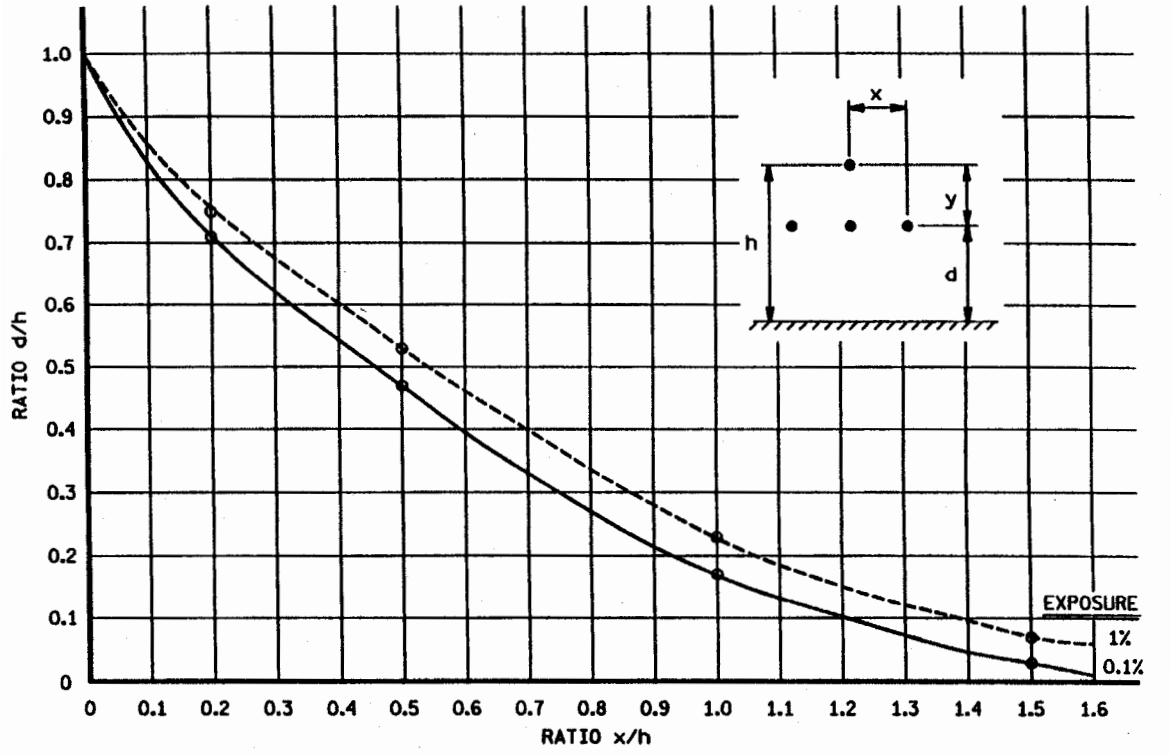

Figure A.5 —Protection of exposed horizontal conductors by a single shield wire

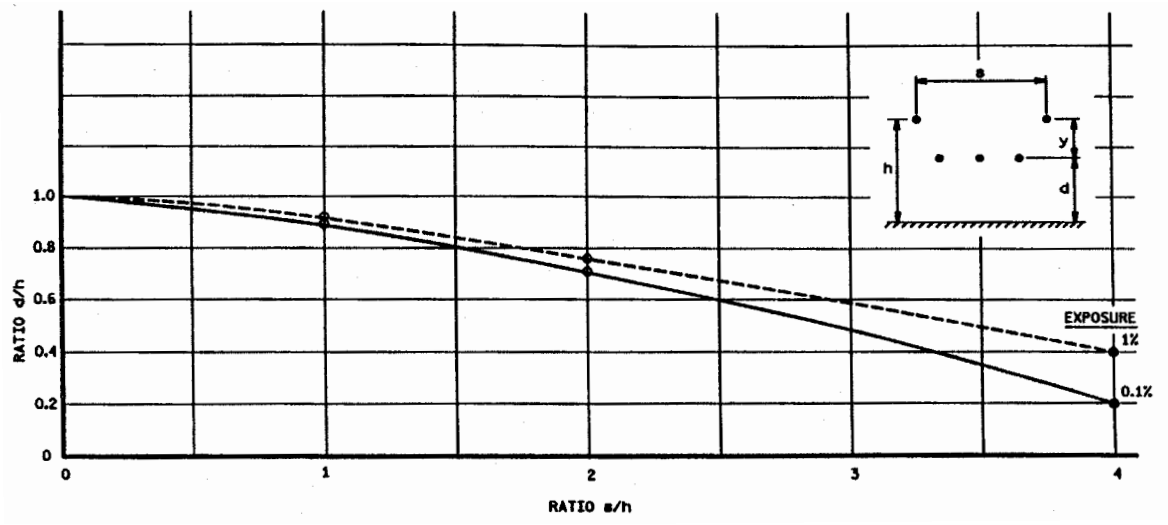

Figure A.6 —Protection of exposed horizontal conductors by two shield wires

Copyright © 1996 IEEE All Rights Reserved

Copyright The Institute of Electrical and Electronics Engineers, Inc.
Provided by IHS under license with IEEE
No reproduction or networking permitted without license from IHS Not for Resale

Annex B Sample calculations (Informative)

B.1 Introduction

This annex will illustrate the application of lightning shielding to actual substations. The methods presented in the guide will be illustrated for two substations, a 69 kV station and a 500 kV to 230 kV step-down station. The 69 kV substation will be assumed to be single voltage station with the secondary bus in a protected enclosure. The 500/230 kV station will illustrate how to handle multiple voltage levels when using the electrogeometric model.

Clause B.2 Illustrates the use of the fixed angle for the two stations. Clause B.3 illustrates the use of empirical curves (Wagner's method). Clause B.4 illustrates the application of the electrogeometric theory by a computer program, and clause B.5 illustrates the application of the electrogeometric theory by the rolling sphere method. Data on bus heights, diameters, and basic impulse design levels are given in tables B.1-1 and B.1-2 in order to allow the user to follow the calculations. The layouts of the substations to be protected are given in figures B.1-1 and B.1-2. Following sample calculations is a discussion comparing the results of the methods.

Table B.1-1 —Data for 69 kV substation

Electrical data	Bus data	Height, ft (m)	Diameter in (mm)
Nom. volt., 69 kV	Bus A:	14 (4.27)	4.5 (114.30)
Bus BIL, 350 kV	Bus B:	19 (5.79)	4.5 (114.30)
Equip. BIL, 350 kV	Bus C:	33 (10.06)	1.0 (25.40)

Table B.1-2 —Data for 500/230 kV substation

Electrical data	
500 kV section	**230 kV section**
Nom. volt. 500 kV	Nom. volt. 230 kV
Bus BIL 1800 kV	Bus BIL 900 kV
Equip. BIL 1800 kV	Equip. BIL 900 kV
Ph-Gnd C1 15 ft (4572 mm)	Ph-Gnd Cl.5.92 ft (1803 mm)

Bus data					
500 kV section			**230 kV section**		
Bus	**Ht. ft (m)**	**Dia., in. (mm)**	**Bus**	**Ht. ft (m)**	**Dia., in. (mm)**
A	5.5 (16.76)	4.5 (114.30)	A	28 (8.53)	5.5 (135.00)
B	30 (9.14)	4.5 (114.30)	B	20 (6.10)	5.5 (135.00)
			C	39 (11.89)	5.5 (135.00)

Copyright © 1996 IEEE All Rights Reserved

Copyright The Institute of Electrical and Electronics Engineers, Inc.
Provided by IHS under license with IEEE
No reproduction or networking permitted without license from IHS
Not for Resale

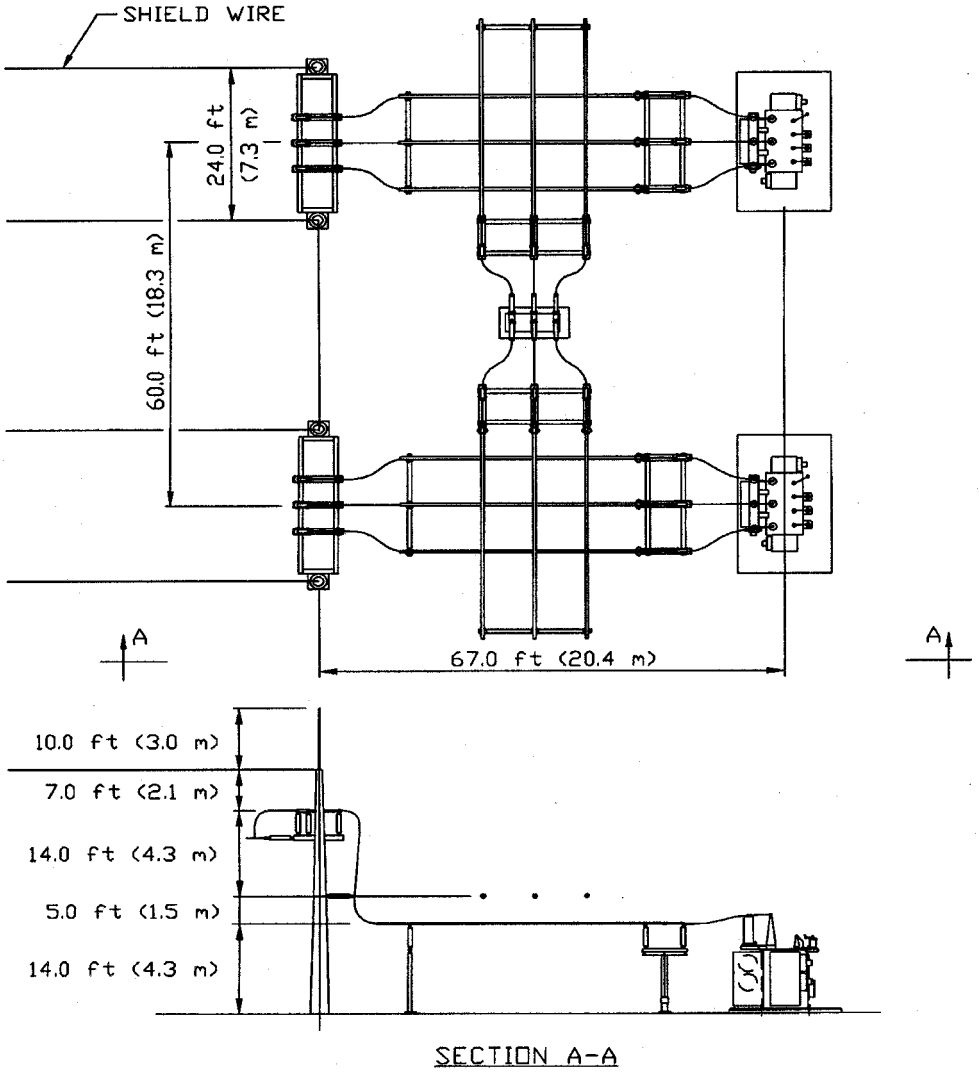

Figure B.1-1 —Typical 69 kV substation layout for sample calculations

To ensure comparability of the results of the different shielding design methods, the following criteria were adopted:

a) Maximum height of mast or shield wire support point = 100 ft (30.48 m)
b) Maximum span of shield wires = 600 ft (182.9 m)
c) No more than four shield wires are to be connected to a support structure

B.2 Fixed angle method

B.2.1 Application to 69 kV substation

a) Assume a mast height and location in figure B.2-1.

b) Determine coverage at different bus or equipment heights using 60° and 45° protective angles for the protective masts and deadend structures. Table B.2-1(b) gives the coverage (protected area) at bus height A for each mast height.

Copyright © 1996 IEEE All Rights Reserved

Copyright The Institute of Electrical and Electronics Engineers, Inc.
Provided by IHS under license with IEEE
No reproduction or networking permitted without license from IHS Not for Resale

c) Draw arcs of coverage for buses on plan view of station as shown in figure B.2-3.

NOTE — 60° angle can only be used if two arcs overlap. Otherwise, the 45° angle coverage must be used.

d) Increase mast heights, relocate masts, and/or add masts as required to obtain complete coverage.

NOTE — The solution for this example remains the same whether masts are being used alone or with shield wires, i.e., no shield wires are necessary.

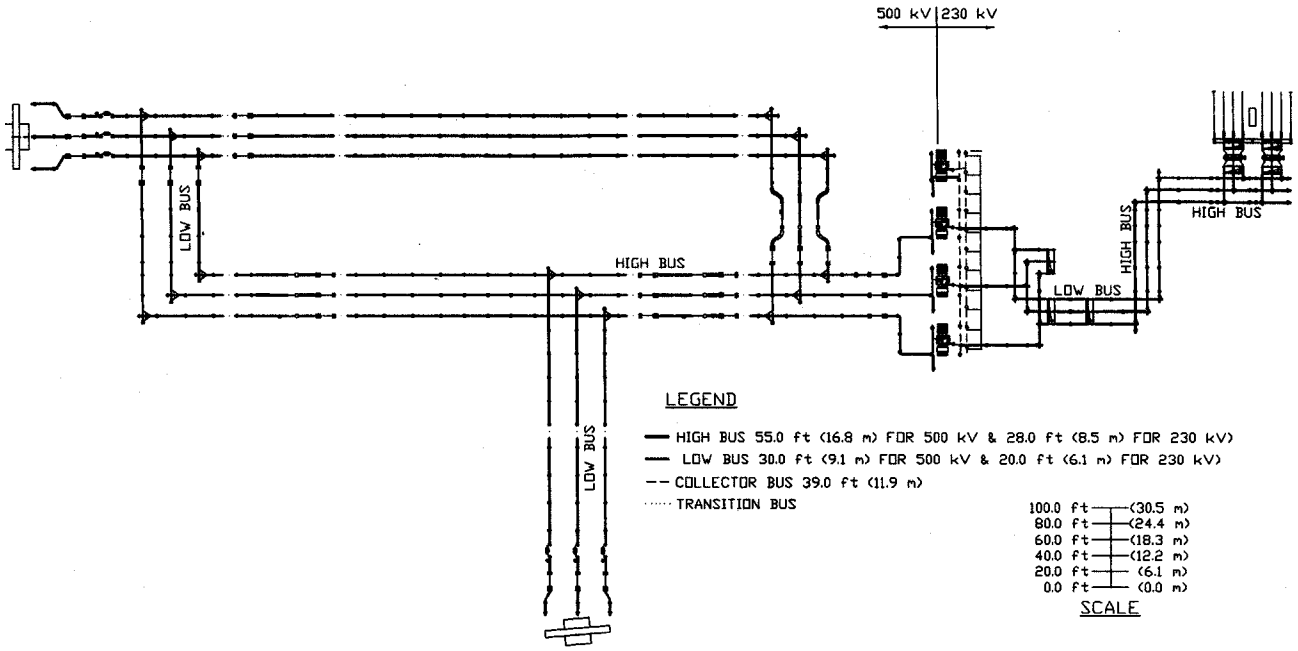

Figure B.1-2 —Typical 500/230 kV substation layout for sample calculations

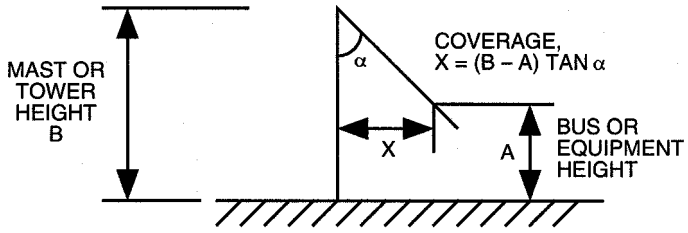

Figure B.2-1 —Shielding angle for single mast

Copyright © 1996 IEEE All Rights Reserved

Copyright The Institute of Electrical and Electronics Engineers, Inc.
Provided by IHS under license with IEEE
No reproduction or networking permitted without license from IHS
Not for Resale

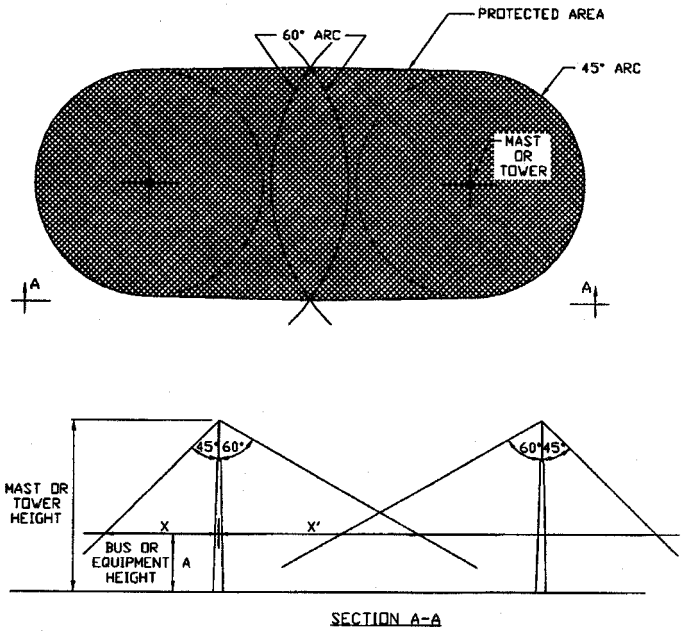

Figure B.2-2 —Coverage at height A, two masts

Table B.2-1(a) —Coverage at height A (ft)

Ht. (ft)	Coverage X (ft)					
Bus or equip.	75 ft mast		50 ft twr.		40 ft twr.	
	60° ∠	45° ∠	60° ∠	45° ∠	60° ∠	45° ∠
33.0	72.7	42	29.4	17	12.1	7
19	97	56	53.7	31	36.4	21
14	105.7	61	62.4	36	45	26

Table B.2-1(b) —Coverage at height A (m)

Ht. (m)	Coverage X (m)					
Bus or equip.	22.9 m mast		15.2 m twr.		12.2 m twr.	
	60° ∠	45° ∠	60° ∠	45° ∠	60° ∠	45° ∠
10.1	22.2	12.8	9.0	5.2	3.7	2.1
5.8	29.6	17.1	16.4	9.4	11.1	6.4
4.3	32.2	18.6	19.0	11.0	13.7	7.9

Copyright © 1996 IEEE All Rights Reserved

Copyright The Institute of Electrical and Electronics Engineers, Inc.
Provided by IHS under license with IEEE
No reproduction or networking permitted without license from IHS
Not for Resale

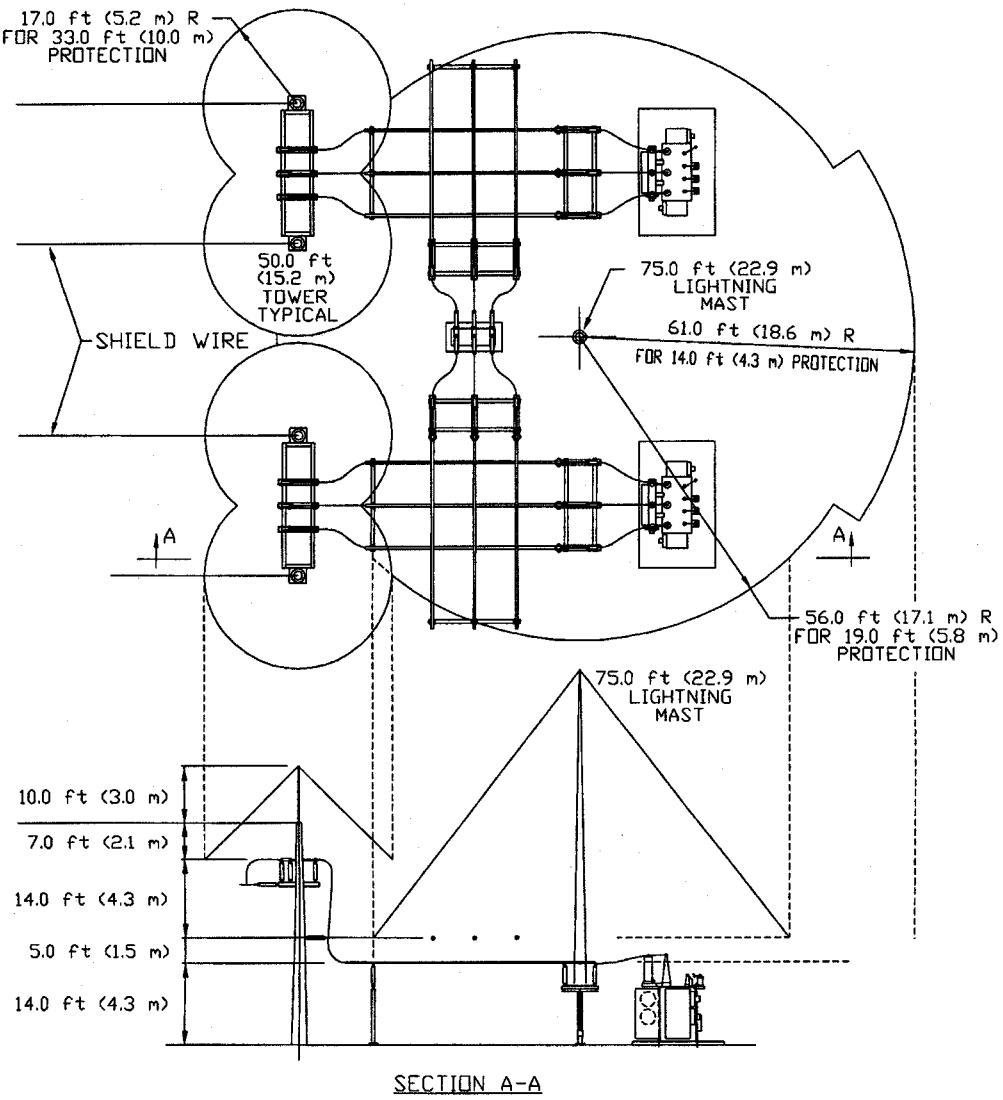

Figure B.2-3 —Shielding substation with masts using fixed angle method

B.2.2 Fixed angle method—500/230 kV substation

Applying the same method as used in the previous clause for the 69 kV substation produces the results, shown in figures B.2-4 through B.2-7(b). A shield angle of 45/60 degrees was used for the 230 kV section, and an angle of 45/45 degrees was used for the 500 kV section.

Copyright © 1996 IEEE All Rights Reserved

Copyright The Institute of Electrical and Electronics Engineers, Inc.
Provided by IHS under license with IEEE
No reproduction or networking permitted without license from IHS
Not for Resale

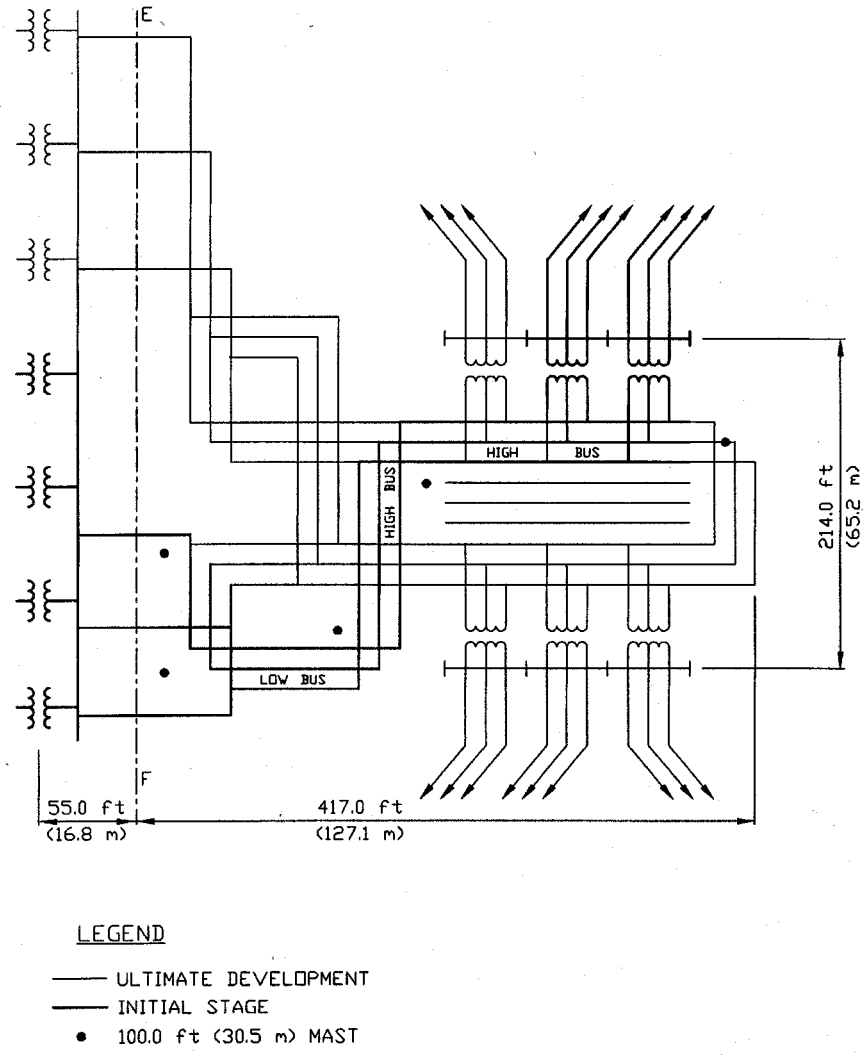

Figure B.2-4 —Shielding a 230 kV substation with masts using fixed angle method

Copyright © 1996 IEEE All Rights Reserved

Copyright The Institute of Electrical and Electronics Engineers, Inc.
Provided by IHS under license with IEEE
No reproduction or networking permitted without license from IHS
Not for Resale

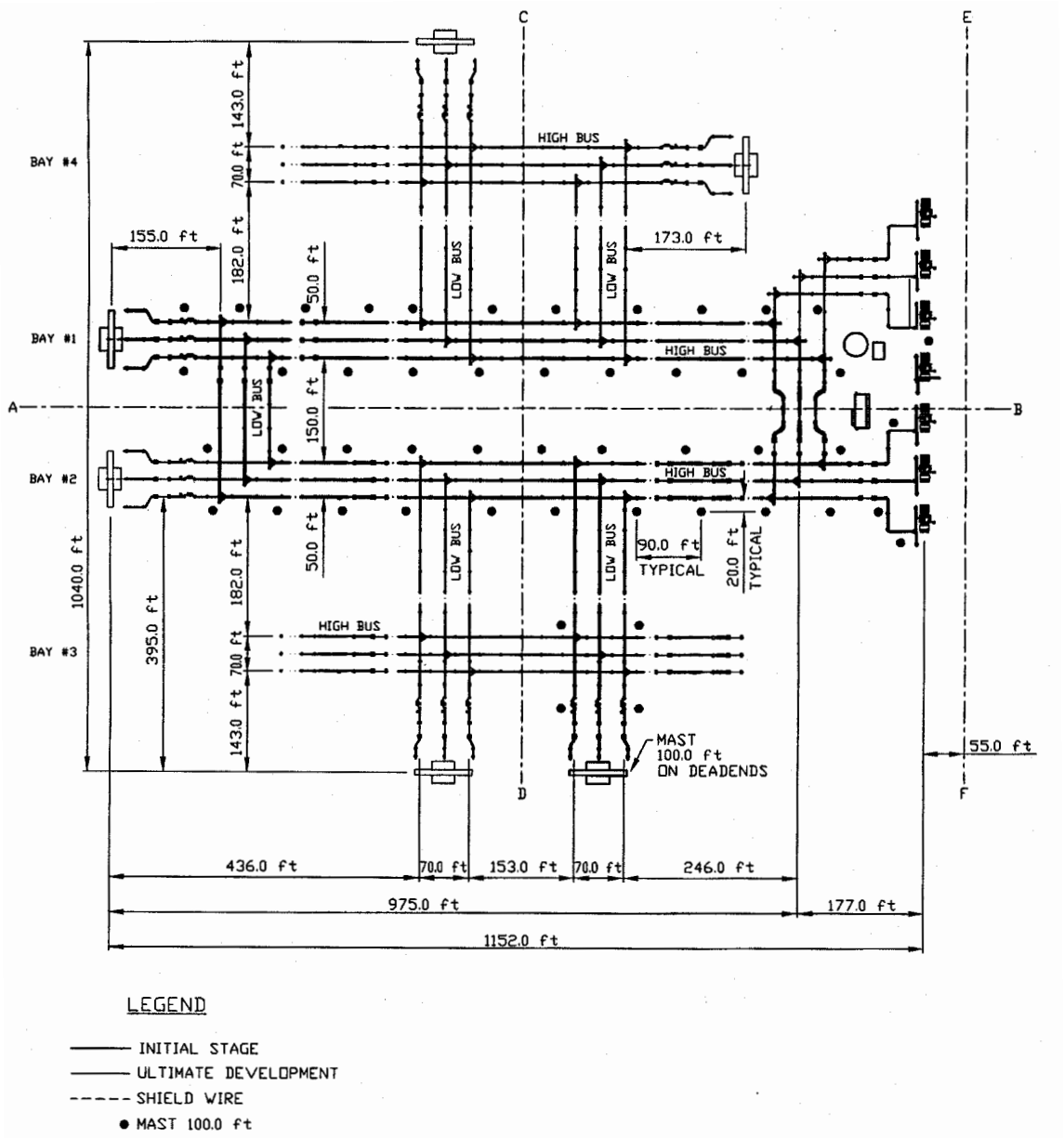

Figure B.2-5(a) —Shielding a 500 kV substation with masts using fixed angle method

Copyright © 1996 IEEE All Rights Reserved

Copyright The Institute of Electrical and Electronics Engineers, Inc.
Provided by IHS under license with IEEE
No reproduction or networking permitted without license from IHS
Not for Resale

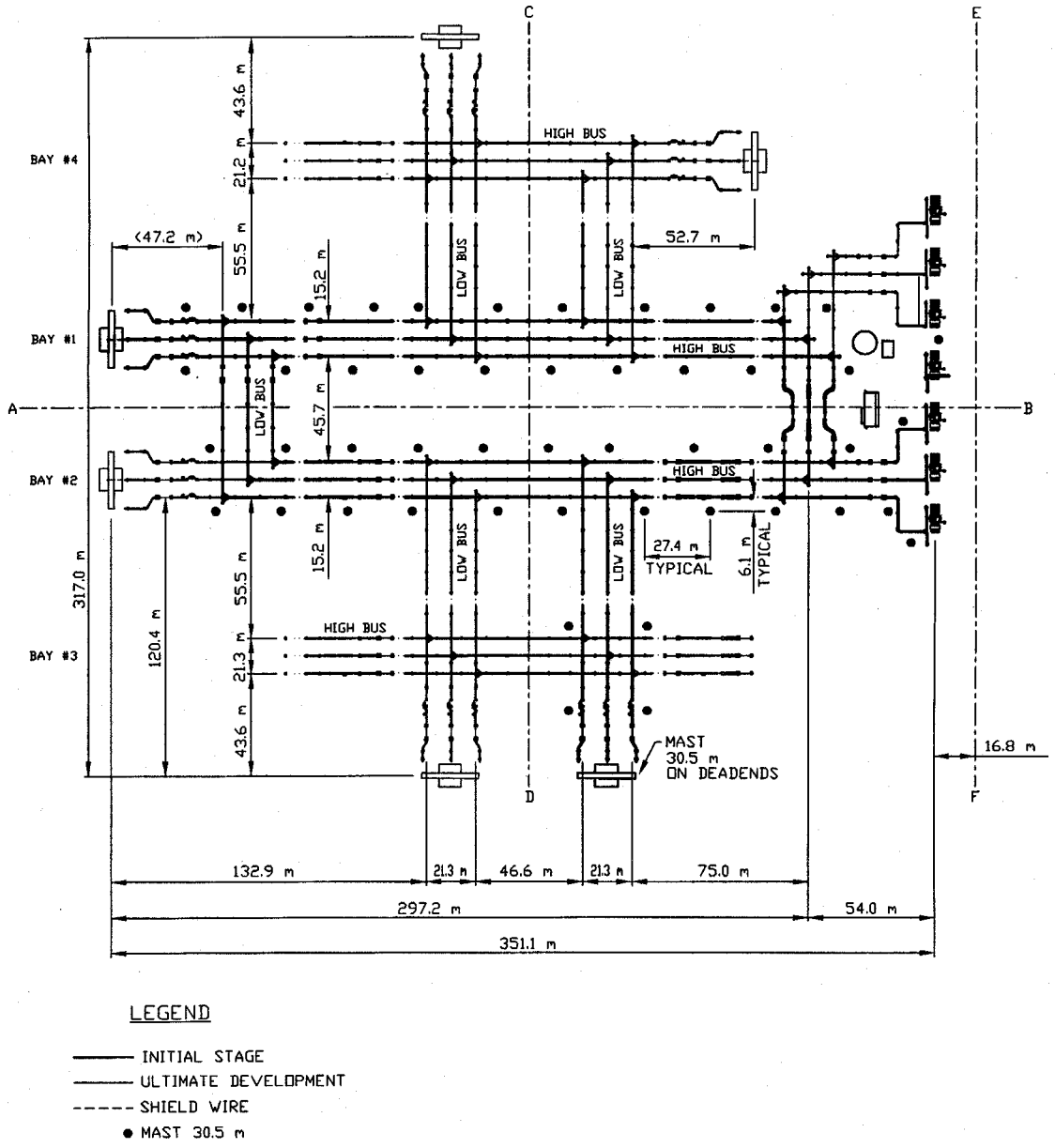

Figure B.2-5(b) —Shielding a 500 kV substation with masts using fixed angle method

Copyright © 1996 IEEE All Rights Reserved

Copyright The Institute of Electrical and Electronics Engineers, Inc.
Provided by IHS under license with IEEE
No reproduction or networking permitted without license from IHS
Not for Resale

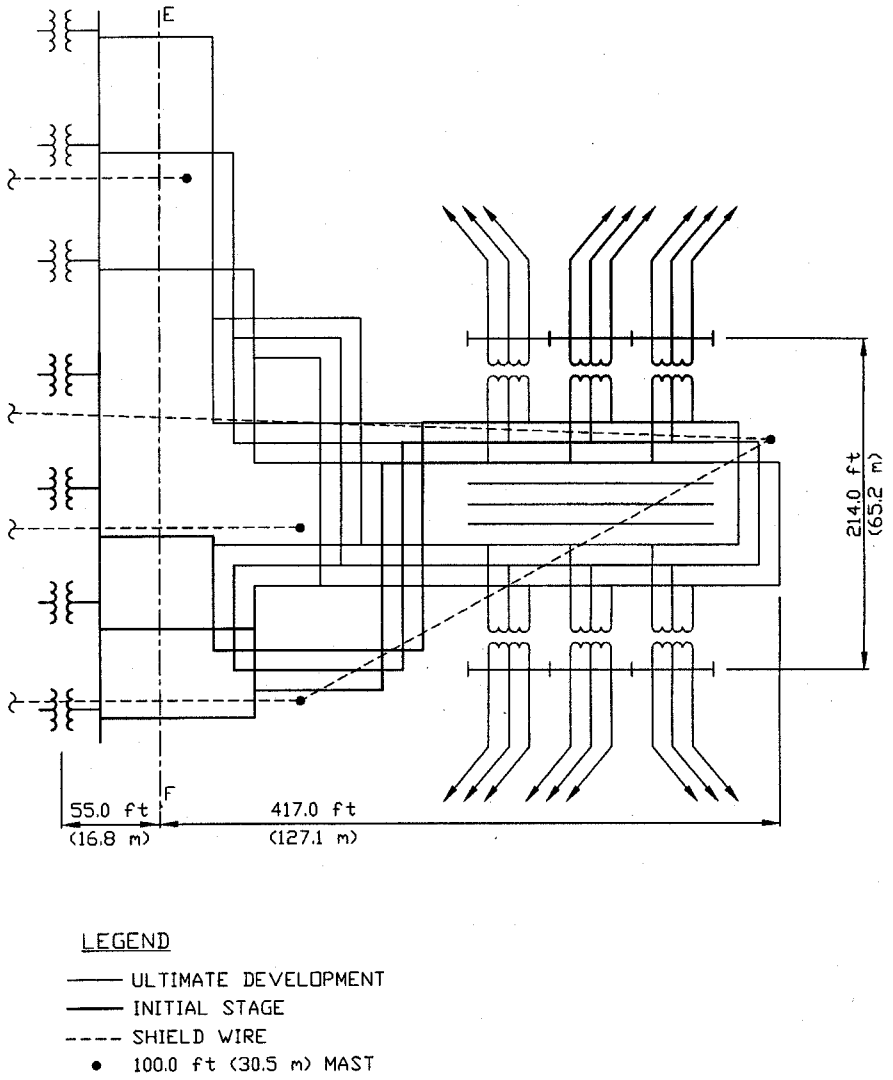

Figure B.2-6 —Shielding a 230 kV substation with shield wires using fixed angle method

Copyright © 1996 IEEE All Rights Reserved

Copyright The Institute of Electrical and Electronics Engineers, Inc.
Provided by IHS under license with IEEE
No reproduction or networking permitted without license from IHS
Not for Resale

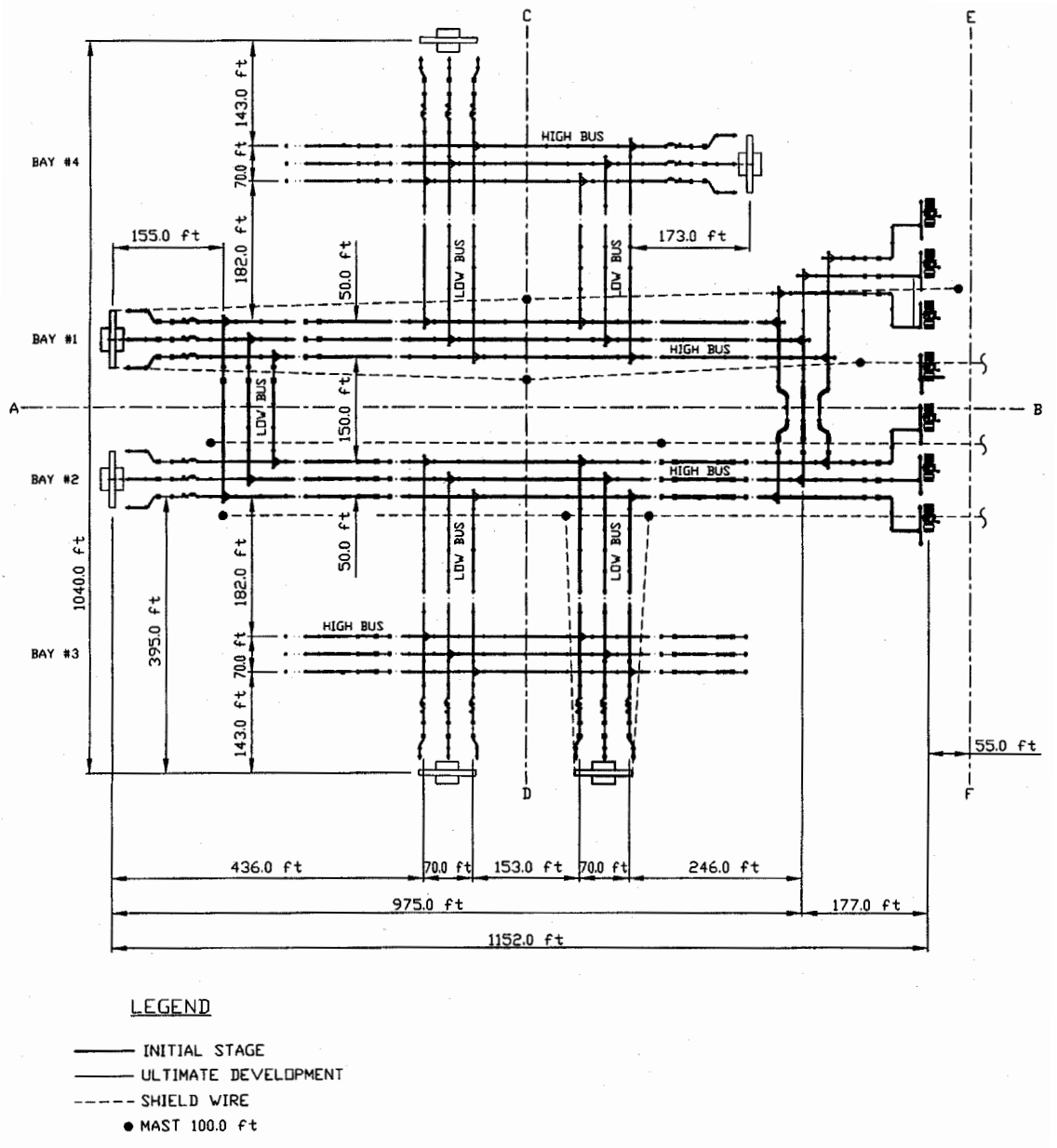

Figure B.2-7(a) —Shielding a 500 kV substation with shield wires using fixed angle method

Copyright © 1996 IEEE All Rights Reserved

Copyright The Institute of Electrical and Electronics Engineers, Inc.
Provided by IHS under license with IEEE
No reproduction or networking permitted without license from IHS
Not for Resale

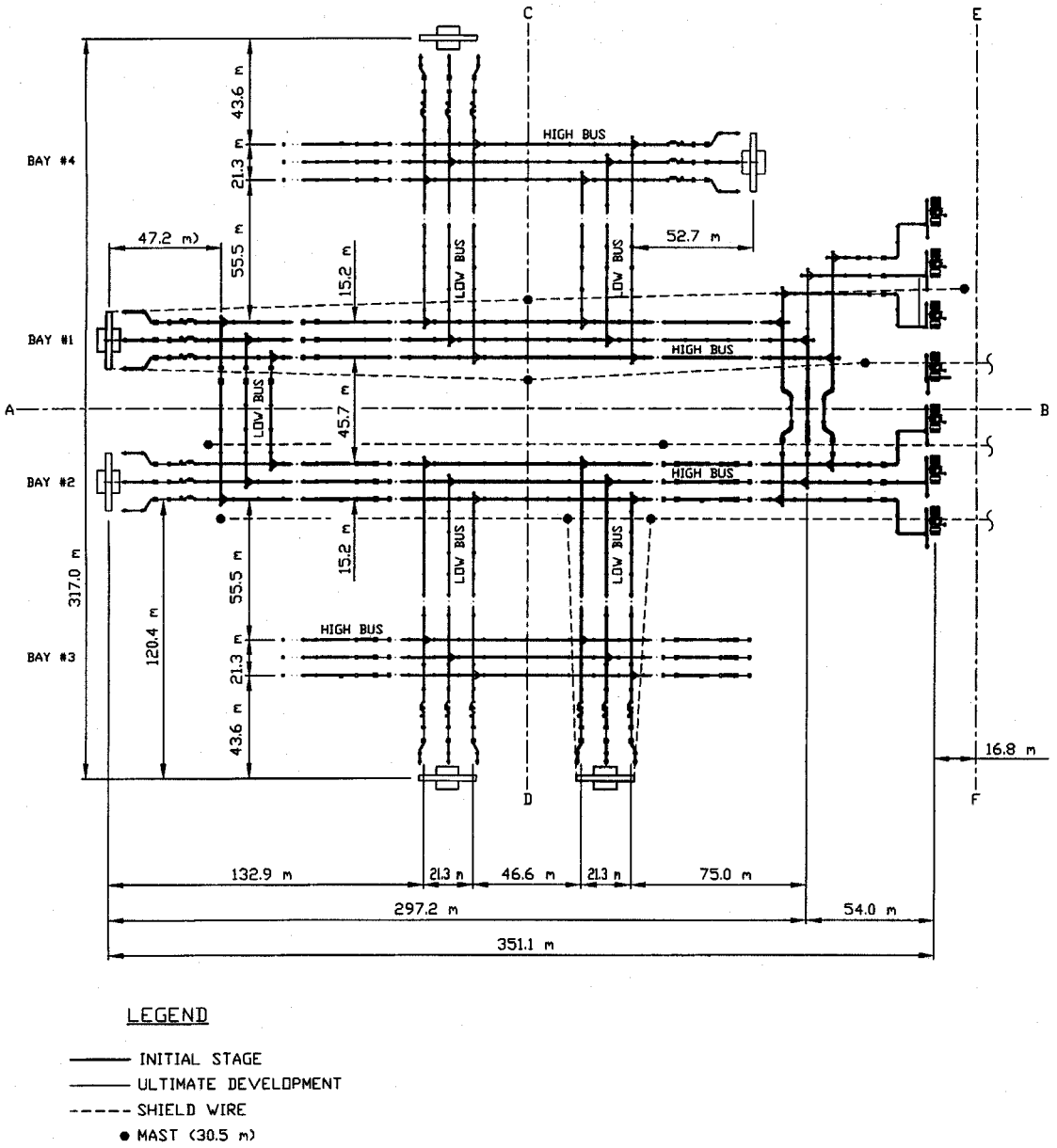

Figure B.2-7(b) —Shielding a 500 kV substation with shield wires using fixed angle method

B.3 Empirical method—Application design procedure

B.3.1 Application to 69 kV substation

a) Determine bus and/or equipment heights to be shielded from figure B.1-1.
e.g., 69 kV switch = 33 ft (10.1 m)
69 kV bus = 19 ft (5.8 m)

b) Determine existing mast and/or shield wire heights from figure B.1-1.
e.g., 69 kV deadend structure = 50 ft (15.2 m)
Free-standing mast = 58 ft (17.7 m)

Copyright © 1996 IEEE All Rights Reserved

Copyright The Institute of Electrical and Electronics Engineers, Inc.
Provided by IHS under license with IEEE
No reproduction or networking permitted without license from IHS
Not for Resale

NOTE — It can be seen from figure B.3-2 (derived from figure 4-3) that for d = 19 ft (using the d = 20 ft curve), the maximum effective mast height for a single point object is estimated to be $y + d = h$ or 39 ft + 19 ft = 58 ft (17.7 m). *The designer should not extrapolate beyond the limits of the empirical data*. Alternatively, for a ring of objects at a specified height of 19 ft, the maximum effective mast height would be 79 ft (24.1 m) (determined using figure 4-5). This apparent contradiction can be attributed to the original paper's hypothesis that the probability of a stroke to any one object in the ring of objects is less than the probability of a stroke to one protected point. A conservative approach would be to shield a ring of protected objects as a single protected point.

c) Using the empirical data, determine the coverage provided by the masts and/or shield wires for the specified heights.

To shield the 33 ft high bus in figure B.1-1 with the two 50 ft deadend structure masts separated by 24 ft, enter figure B.3-3 (derived from figure 4-7) using a y value of 17 ft ($h - d = 50 - 33$). Move horizontally to a value for d = 33 ft by interpolating. Project vertically to determine the maximum value for s = 140 ft (42.7 m) (see figure B.3-1.) Next enter figure B.3-2 with value of y = 17 ft ($h - d = 50 - 33$). Move horizontally to a value for d = 33 ft by interpolating. Project vertically to determine the maximum radius x = 16 ft (4.9 m).

To shield the 19 ft high bus with a 58 ft mast (or masts), enter figure B.3-2 using a value of y = 39 ft ($h - d$ = 58 – 19). Move horizontally to a value for d = 19 ft by interpolating. Project vertically to determine the maximum radius x = 58 ft (17.7 m). Should multiple 58 ft masts be required, enter figure B.3-3 (derived from figure 4-7) using a value of y = 39 ft ($h - d$ = 58 – 19). Move horizontally to a value for d = 19 ft by interpolating. Project vertically to determine the maximum value for s = 249 ft (75.9 m) (see figure B.3-1).

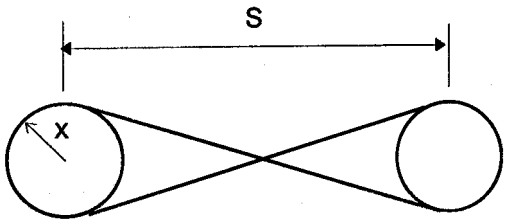

Figure B.3-1 —Area protected by two masts

d) Plot shielded areas on the substation plan as in figure B.3-4 to determine if shielding is adequate, or if additional masts and/or shield wires are required. The two 50 ft (15.2 m) structure masts separated at 24 ft (7.3 m) are clearly adequate for the 33 ft (10 m) high bus, and a single 58 ft (17.7 m) mast is adequate for the 19 ft (5.8 m) high bus.

Copyright © 1996 IEEE All Rights Reserved

Copyright The Institute of Electrical and Electronics Engineers, Inc.
Provided by IHS under license with IEEE
No reproduction or networking permitted without license from IHS Not for Resale

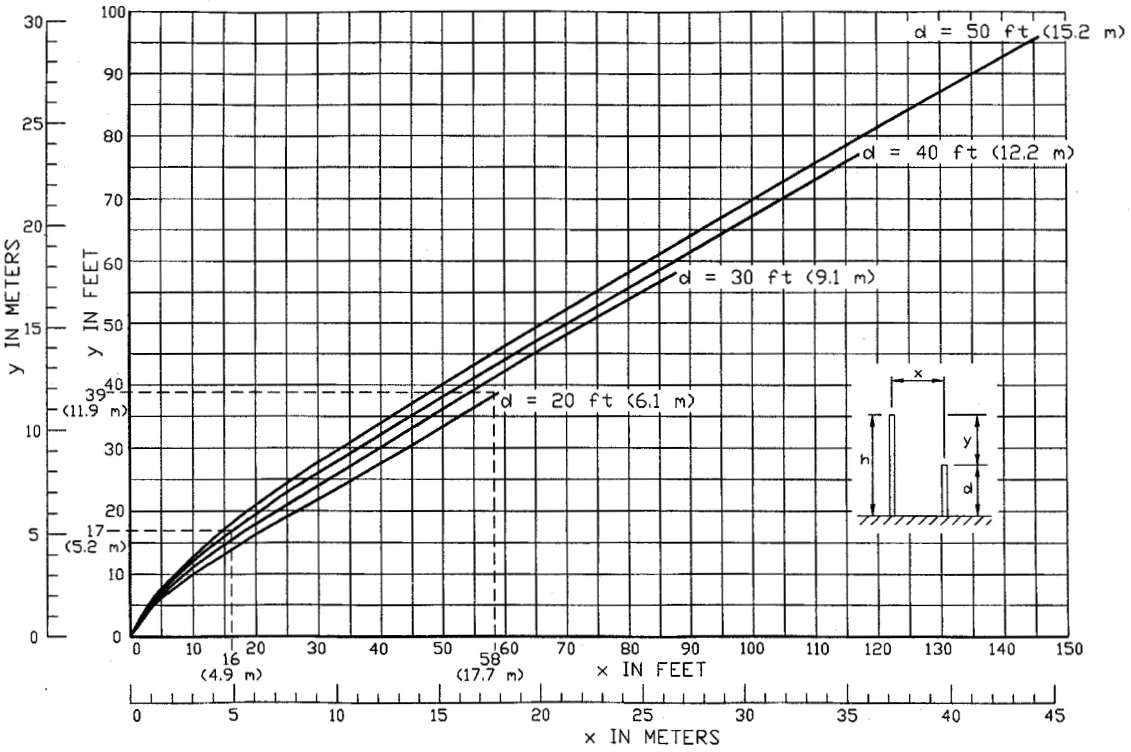

Figure B.3-2—(from figure 4-3)
Single lightning mast protecting single object — 0.1% exposure.
Height of mast above protected object, *y,* as a function of
horizontal separation, *x,* and height of protected object, *d*

B.3.2 Empirical method—500/230 kV substation

a) Determine bus and/or equipment heights to be shielded.
b) Determine existing mast and/or shield wire heights.
c) Using the empirical data, determine the coverage provided by the masts and/or shield wires for the specified heights.

B.3.2.1 Example of protection by mast

To shield the 55 ft (16.8 m) high bus with 100 ft (30.5 m) masts, enter figure B.3-5 (derived from figure 4-7) using a y value of 45 ft ($h - d = 100 - 55$). Move horizontally to a value for $d = 55$ ft by interpolating. Project vertically to determine the maximum value for $s = 338$ ft (103 m). Next enter figure B.3-6 with value of $y = 45$ ft ($h - d = 100 - 55$). Move horizontally to a value for $d = 55$ ft by interpolating. Project vertically to determine the maximum radius $x = 54$ ft (16.5 m). Thus two 100 ft (30.5 m) masts separated by no more than 338 ft (103 m) will provide protection for an area as described in figure 4-15, and a single mast will protect an area about. the mast with a 54 ft (16.5 m) radius at a 55 ft (16.8 m) bus height.

To shield the 28 ft (8.5 m) high bus with 60 ft (18.3 m) masts, enter figure B.3-5 using a y value of 32 ft ($h - d = 60 - 28$). Move horizontally to a value for $d = 28$ ft by interpolating. Project vertically to determine the maximum value for $s = 225$ ft (68.6 m). Next enter figure B.3-6 with value of $y = 32$ ft ($h - d = 60 - 28$).

Copyright © 1996 IEEE All Rights Reserved

Copyright The Institute of Electrical and Electronics Engineers, Inc.
Provided by IHS under license with IEEE
No reproduction or networking permitted without license from IHS
Not for Resale

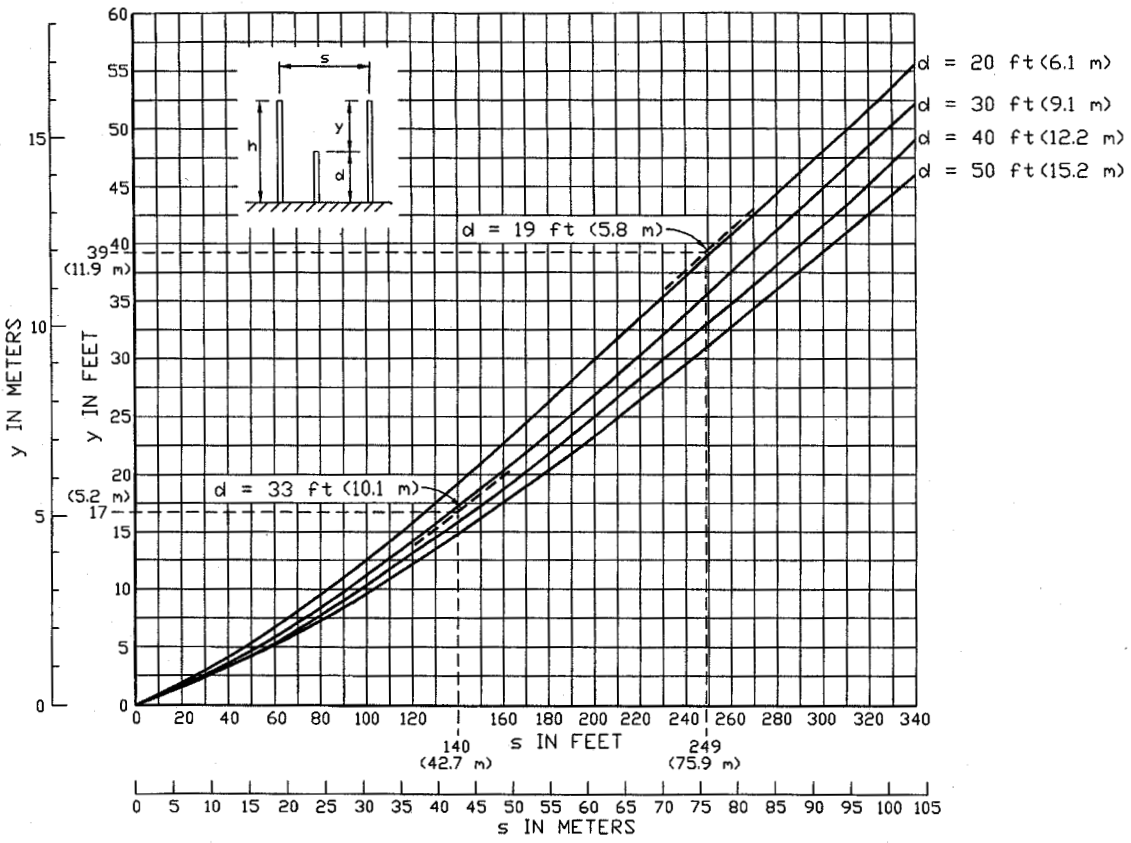

Figure B.3-3—(from figure 4-7)
Two lightning masts protecting single object, no overlap—0.1% exposure. Height of mast above protected object, *y,* as a function of horizontal separation, *a,* and height of protected object, *d*

Move horizontally to a value for d = 28 ft by interpolating. Project vertically to determine the maximum radius x = 44 ft (13.4 m).

As described in 3.4.1 and shown in figures 4-15 and 4-16, the maximum values for mast separation S should be reduced to provide constant exposure design (0.1%) to the area between the masts. For this example, reduce the maximum S by half. The value of S for the 55 ft (16.8 m) bus would be approximately 170 ft (51.8 m), and for the 28 ft (8.5 m) bus S would be approximately 113 ft (34.4 m). The resulting layout using these mast separations for shielding is shown in figures B.3-7 and B.3-8(b).

B.3.2.2 Example of mast and shield wire

First, determine the maximum effective shield wire height. In figure B.3-9, sketch in (by interpolation) a line to represent a 55 ft (16.8 m) bus height. Select the highest integer value of y on this line without leaving the right-hand boundary of the figure (y = 23 ft). Therefore, the maximum effective height of the shield wires is 55 + 23 = 78 ft (23.8 m). A higher shield wire height is not selected because the designer would be extrapolating beyond the available data in figure B.3-9.

Copyright © 1996 IEEE All Rights Reserved

Copyright The Institute of Electrical and Electronics Engineers, Inc.
Provided by IHS under license with IEEE
No reproduction or networking permitted without license from IHS Not for Resale

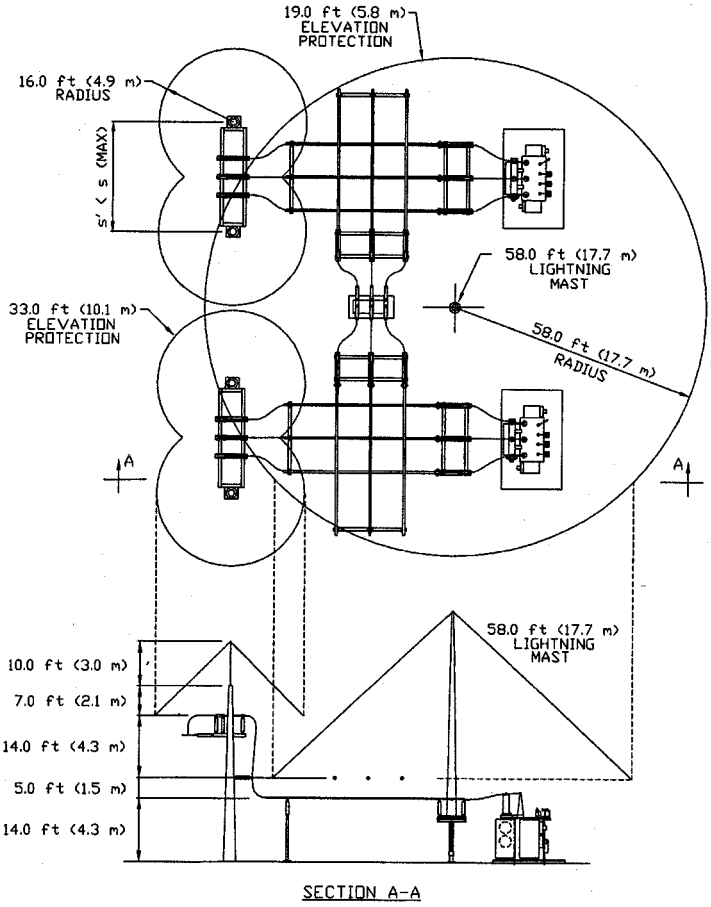

Figure B.3-4 —Shielding substation with masts using empirical method

To shield the 55 ft (16.8 m) high bus with 78 ft (23.8 m) high shield wire, enter figure B.3-9 (derived from figure 4-13) using a y value of 23 ft ($h - d = 78 - 55$). Move horizontally to a value for $d = 55$ ft by interpolating. Project vertically to determine the maximum value for $s = 157$ ft (47.9 m). Next enter figure B.3-10 with value of y equals; 23 ft ($h - d$ equals; 78– 55). Move horizontally to a value for $d = 55$ ft by interpolating. Project vertically to determine the maximum $x = 15$ ft (4.6 m). Thus, two shield wires elevated 23 ft (7 m) above the bus may be separated by no more than 157 ft (47.9 m) to provide protection for the 55 ft (16.8 m) bus. A single wire at the same elevation may be offset horizontally by no more than 15 ft (4.6 m) from the outer conductors.

To shield the 28 ft (8.5 m) high bus with 78 ft (23.8 m) high shield wire, enter figure B.3-10 with value of $y = 50$ ft ($h - d = 78 - 28$). Move horizontally to a value for $d = 28$ ft by interpolating. Project vertically to determine the maximum $x = 52$ ft (15.8 m). An inspection of figure B.3-9 reveals that an attempt to enter the curve at $y = 50$ ft falls off the curve, but it is evident that the shield wires may be separated by at least 160 ft (48.8 m). Place masts and shield wires to obtain complete coverage. The resulting layout using shield wires for shielding is shown in figures B.3-11 and B.3-12(b).

Copyright © 1996 IEEE All Rights Reserved

Copyright The Institute of Electrical and Electronics Engineers, Inc.
Provided by IHS under license with IEEE
No reproduction or networking permitted without license from IHS
Not for Resale

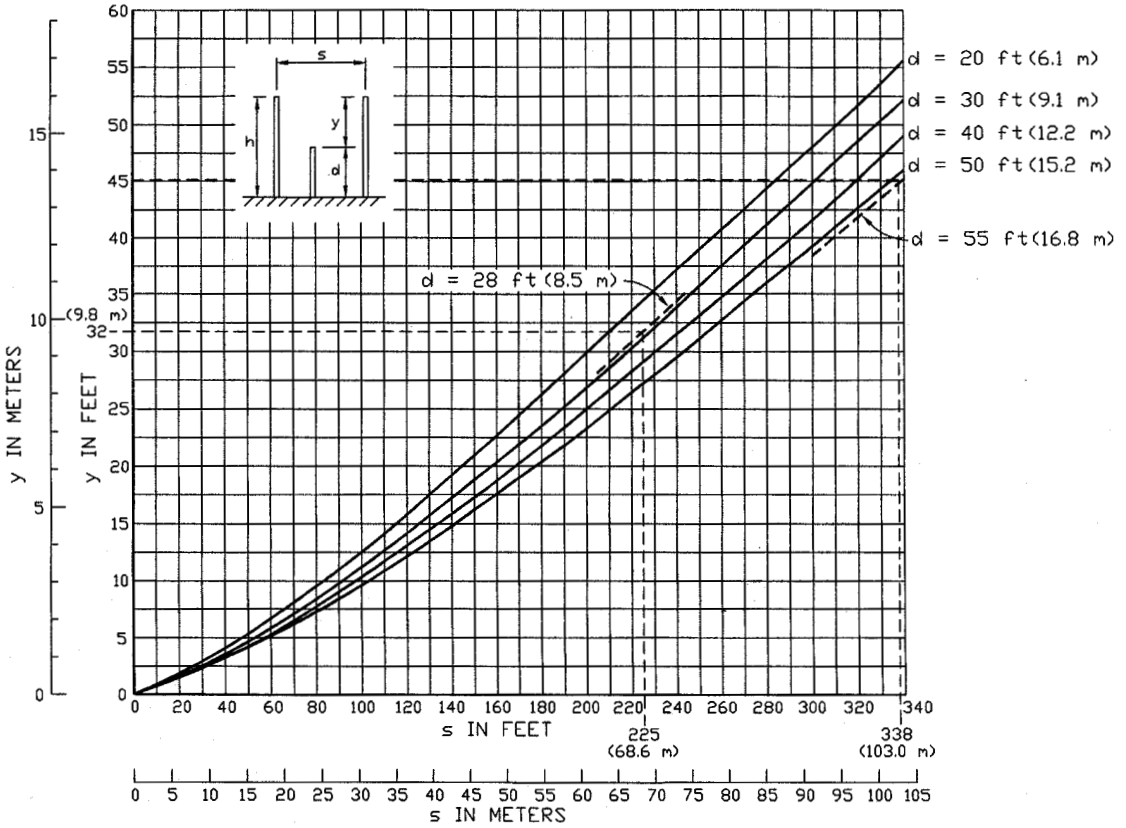

Figure B.3-5 —Two lightning masts protecting single object, no overlap—0.1% exposure. Height of mast above protected object, *y,* as a function of horizontal separation, *a,* and height of protected object, *d*

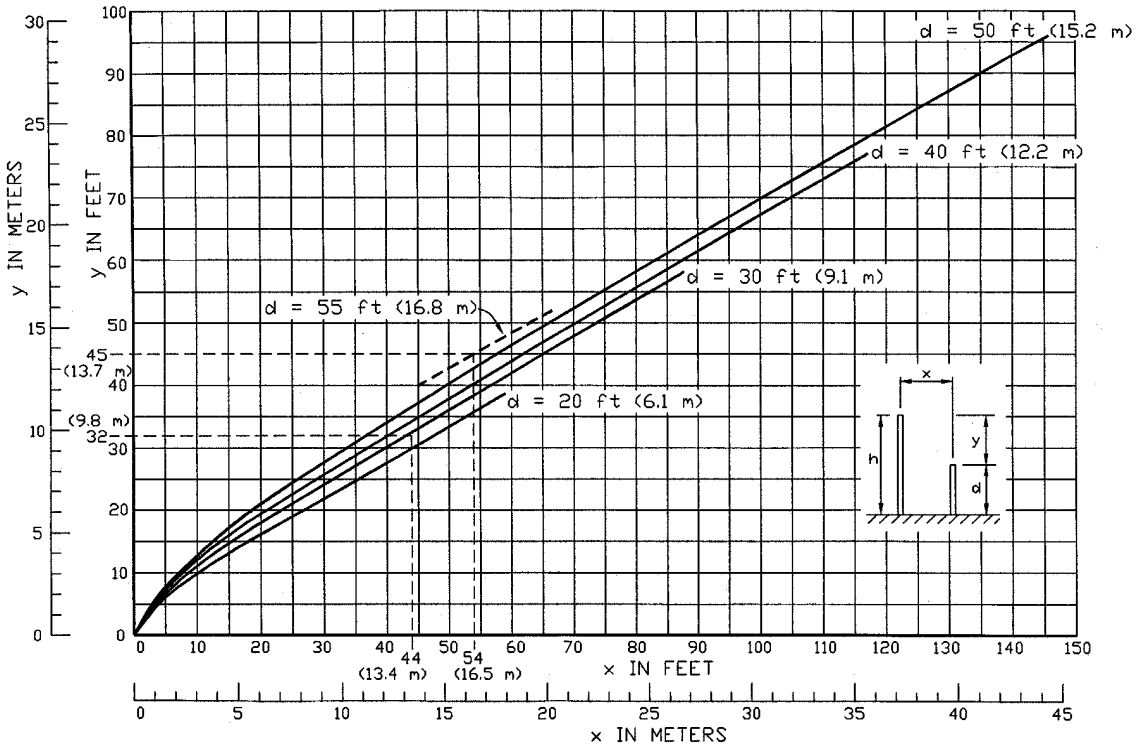

Figure B.3-6 —Single lightning mast protecting single object—0.1% exposure. Height of mast above protected object, *y,*as a function of horizontal separation, *x,* and height of protected object, *d*

Copyright © 1996 IEEE All Rights Reserved

Copyright The Institute of Electrical and Electronics Engineers, Inc.
Provided by IHS under license with IEEE
No reproduction or networking permitted without license from IHS
Not for Resale

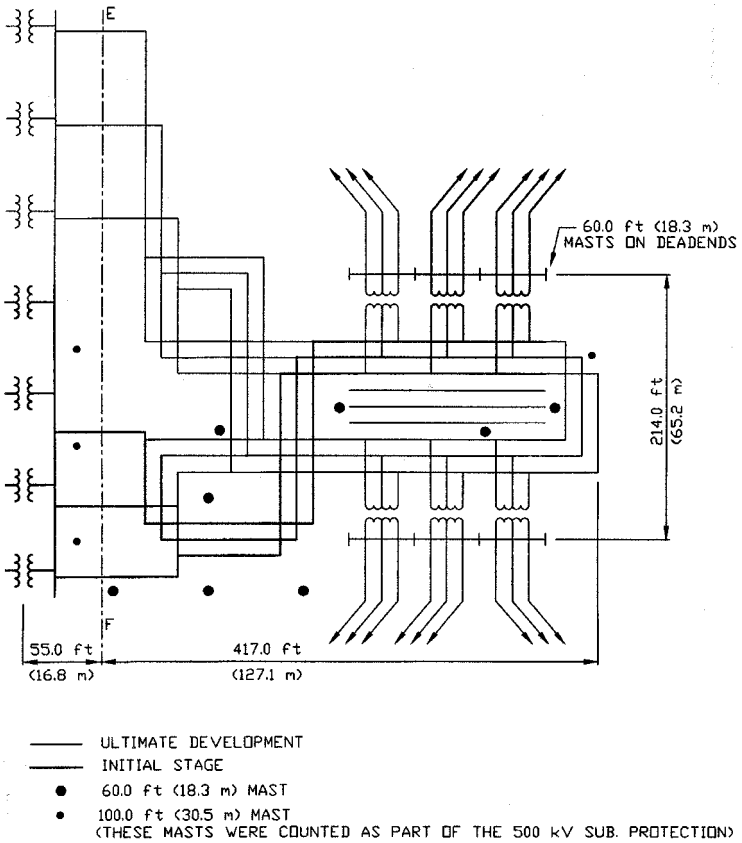

Figure B.3-7 —Shielding a 230 kV substation with masts using empirical method

Copyright © 1996 IEEE All Rights Reserved

Copyright The Institute of Electrical and Electronics Engineers, Inc.
Provided by IHS under license with IEEE
No reproduction or networking permitted without license from IHS
Not for Resale

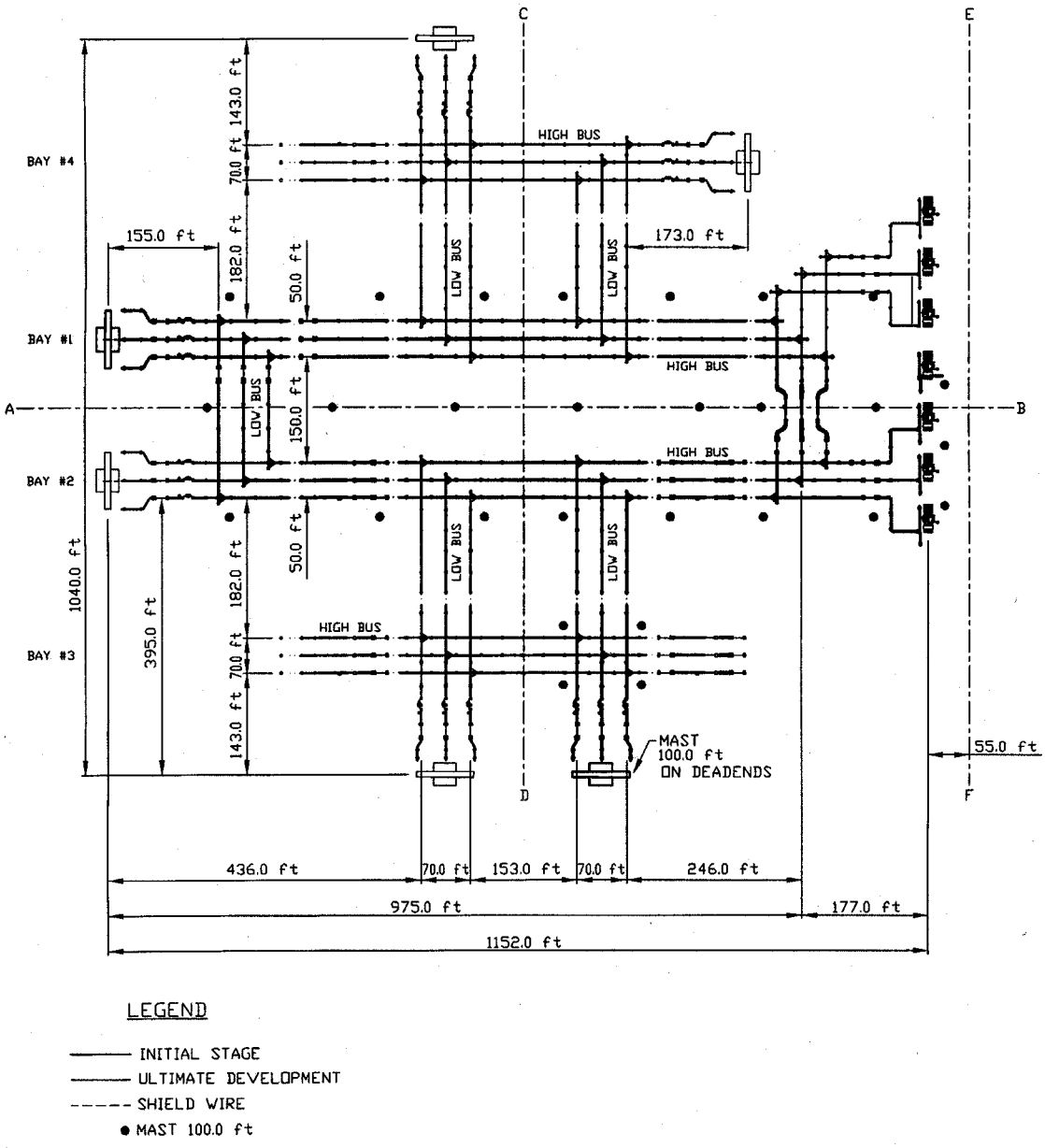

Figure B.3-8(a) —Shielding a 500 kV substation with masts using empirical method

Copyright © 1996 IEEE All Rights Reserved

Copyright The Institute of Electrical and Electronics Engineers, Inc.
Provided by IHS under license with IEEE
No reproduction or networking permitted without license from IHS
Not for Resale

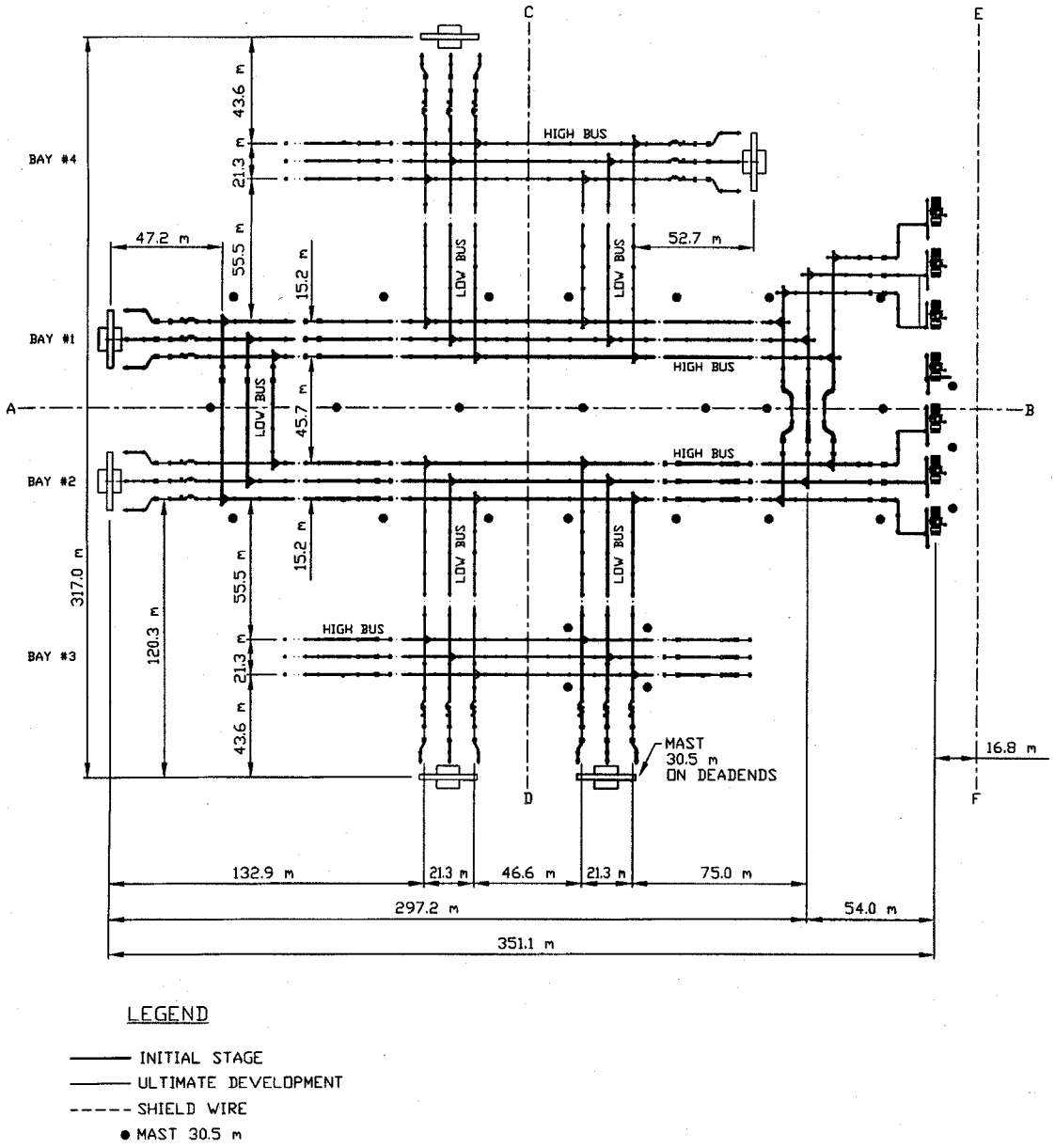

Figure B.3-8(b) —Shielding a 500 kV substation with masts using empirical method

Copyright © 1996 IEEE All Rights Reserved

Copyright The Institute of Electrical and Electronics Engineers, Inc.
Provided by IHS under license with IEEE
No reproduction or networking permitted without license from IHS
Not for Resale

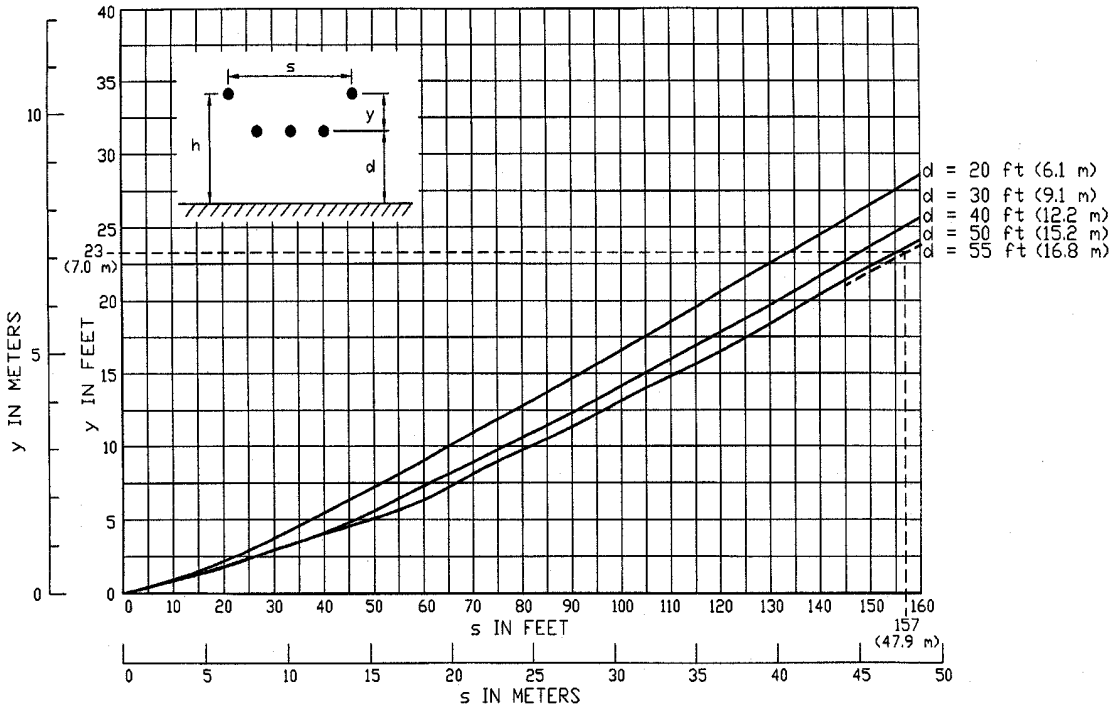

Figure B.3-9 —Two shield wires protecting horizontal conductors—0.1% exposure. Height of shield wires above conductors, y, as a function of horizontal separation, s, and height of protected conductors, d

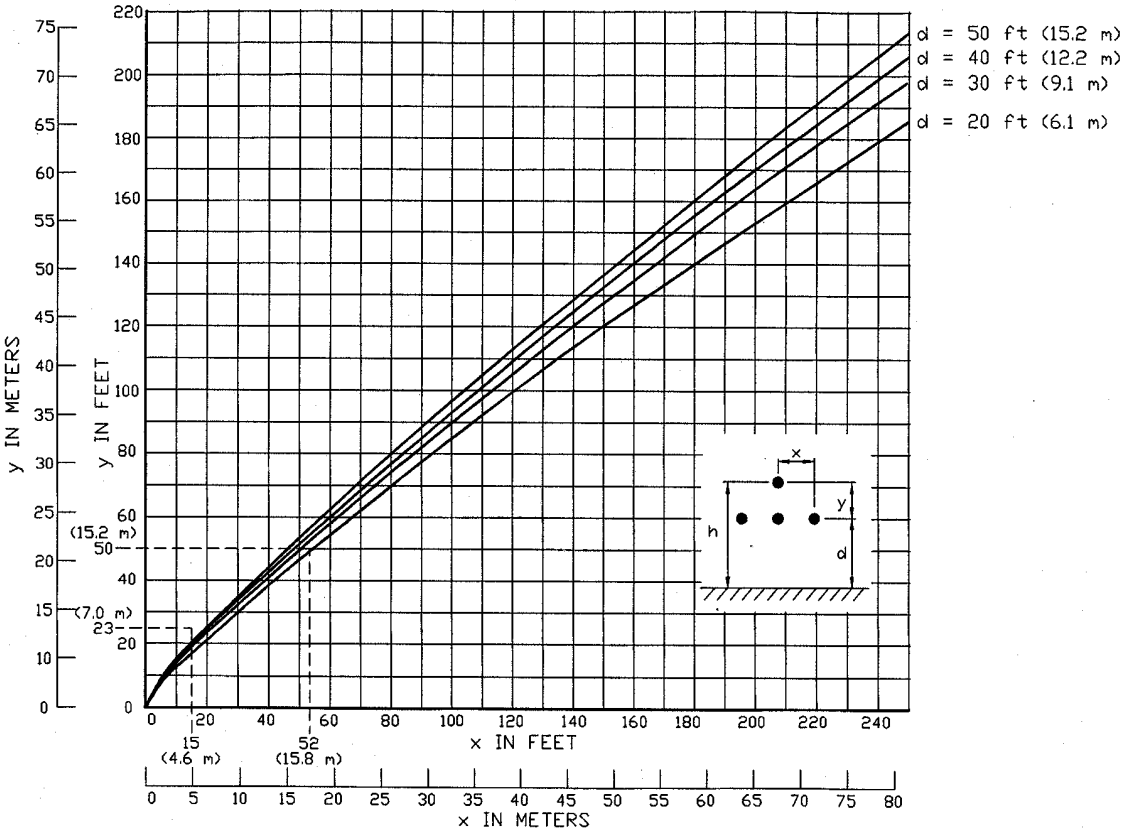

Figure B.3-10 —Single shield wire protecting horizontal conductors—0.1% exposure. Height of shield wires above conductors, y, as a function of horizontal separation, x, and height of protected conductors, d

Copyright © 1996 IEEE All Rights Reserved

Copyright The Institute of Electrical and Electronics Engineers, Inc.
Provided by IHS under license with IEEE
No reproduction or networking permitted without license from IHS
Not for Resale

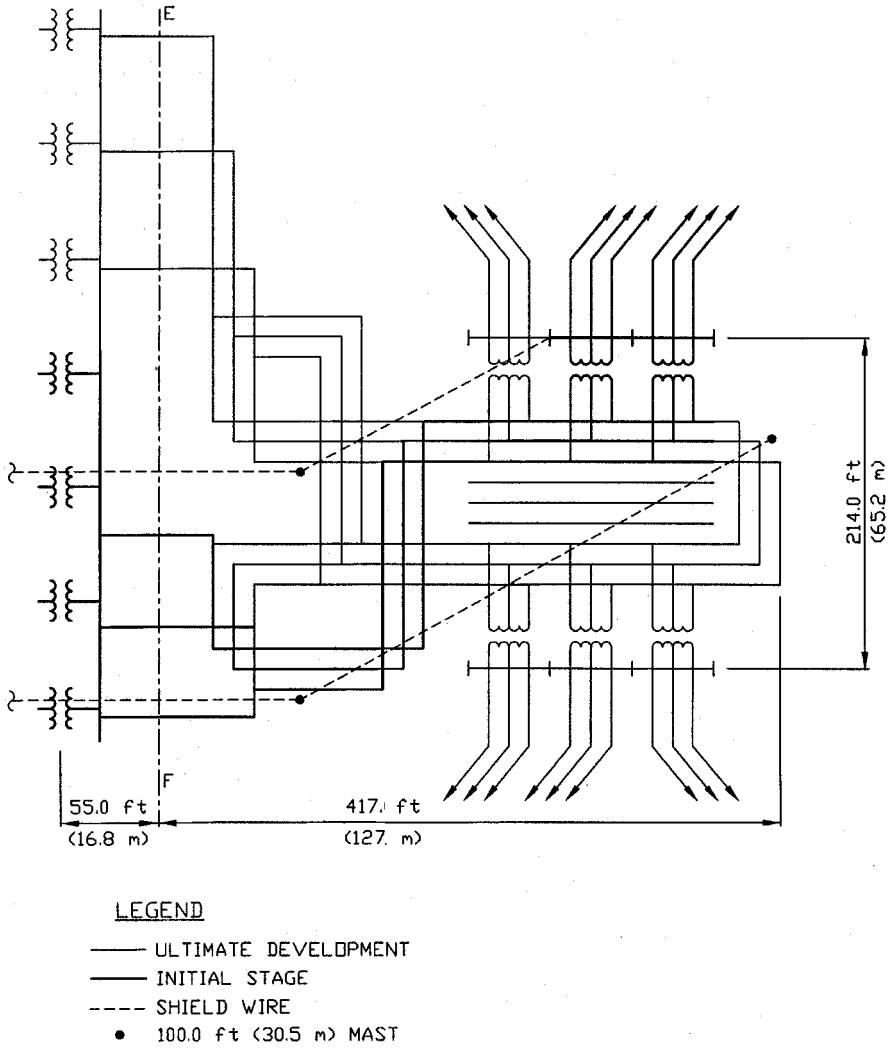

Figure B.3-11 —Shielding a 230 kV substation with shield wires using empirical method

Copyright © 1996 IEEE All Rights Reserved

Copyright The Institute of Electrical and Electronics Engineers, Inc.
Provided by IHS under license with IEEE
No reproduction or networking permitted without license from IHS
Not for Resale

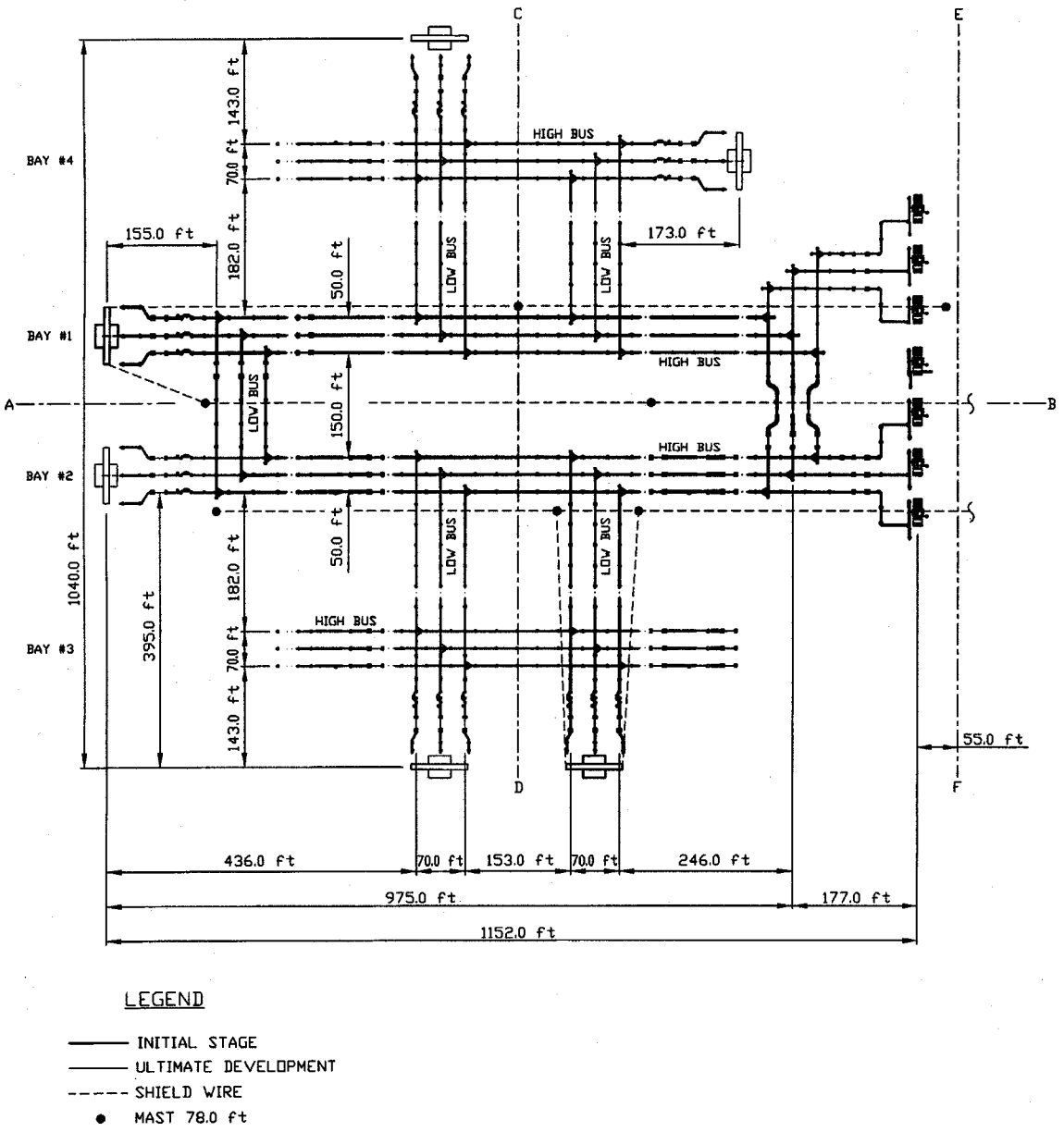

Figure B.3-12(a) —Shielding a 500 kV substation with shield wires using empirical method

Copyright © 1996 IEEE All Rights Reserved

Copyright The Institute of Electrical and Electronics Engineers, Inc.
Provided by IHS under license with IEEE
No reproduction or networking permitted without license from IHS Not for Resale

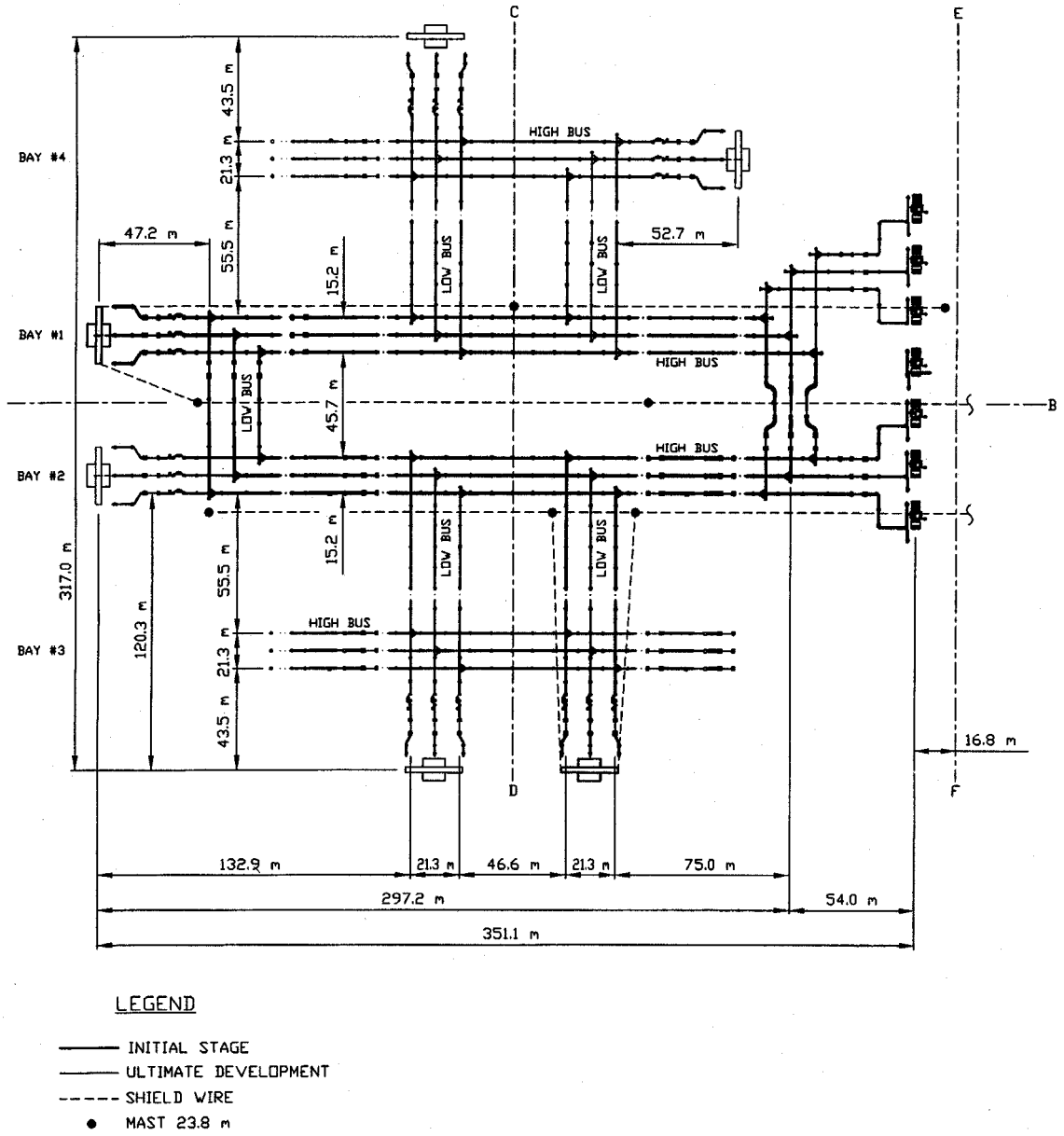

Figure B.3-12(b) —Shielding a 500 kV substation with shield wires using empirical method

B.4 EGM computer program SBSHLD

B.4.1 Application design procedure for 69 kV example

a) Program SBSHLD (pronounced “subshield”) applies to both shield wires and masts. For the case of masts, it basically deals with a module consisting of four masts forming a rectangle. However, it can also analyze other mast arrangements (e.g., case of three masts forming a triangle or case of four masts forming a general quadrangle) by adapting the input data. Hence the first step is to choose the mast locations so that they divide the area into reasonably uniform shapes. The selected locations are shown in figure B.4-1. These divide the protected area into two squares: abed and bcfe plus two identical general quadrangles abhg and bcqp. A separate computer run is needed for each of these two configurations.

Copyright © 1996 IEEE All Rights Reserved

Copyright The Institute of Electrical and Electronics Engineers, Inc.
Provided by IHS under license with IEEE
No reproduction or networking permitted without license from IHS
Not for Resale

b) Next, select mast heights. Considering that the height of the shield wires to the left of points g, h, p, and q is 12.2 m (40 ft), adding 3 m (10 ft) spikes gives 15.24 m (50 ft) high masts. As a starting point, we will assume that the self-supporting masts at points a, b, c, d, e, and f are also 15.24 m (50 ft) high.

c) For the module abed, the four masts are self-supporting and they form a 15.24 m × 15.24 m (50 ft × 50 ft) square. Bus heights within this module are 5.79 m (19 ft) and 4.27 m (14 ft), and the diameter of the bus is 114.3 mm (4 in nominal size). The BIL is 350 kV. Entering the above data in program SBSHLD gives the output shown in Exhibit B.4-1. This shows that the 15.24 m (50 ft) masts provide effective shielding but it also shows that a reduction in mast height for this module down to 11.05 m (36.2 ft) is possible.

d) For the module abhg, two of the four masts are not self-supporting and the diagonal ah of the quadrangle is shorter than the side ab. According to the rules for irregular configurations given in the manual of SBSHLD, this module is equivalent to a rectangle having dimensions of 15.24 m and zero. The bus heights within this module are 10.06 m (33 ft) and 4.27 m (14 ft). The higher level bus uses a flexible wire of unspecified diameter and a 25.4 mm (1.0 in) value has been assumed. Exhibit B.4-2 gives the computer output for this case. This shows that adequate shielding is provided. It also shows that masts 13.02 m (42.7 ft) high would also be adequate for this case.

e) The minimum mast height 13 m (42.7 ft) needed for module abhg exceeds 12.2 m (40 ft) Hence use of 15.24 m (50 ft) high masts at points a, b, c, g, h, p, and q is a good choice. On the other hand, the minimum mast height 11 m (36.2 ft) needed for module abed is less than 12.2 m (40 ft). Hence a reduction in mast height at points d, e, and f is in order. This gives a four mast module consisting of two 15.24 m (50 ft) high masts plus two 12.2 m (40 ft) high masts. According to the rules for irregular configurations given in the manual of SBSHLD, this can be analyzed as four 12.2 m (40 ft) high masts. The computer printout for this case is given in Exhibit B.4-3 and it shows that effective shielding is provided.

Copyright © 1996 IEEE All Rights Reserved

Copyright The Institute of Electrical and Electronics Engineers, Inc.
Provided by IHS under license with IEEE
No reproduction or networking permitted without license from IHS Not for Resale

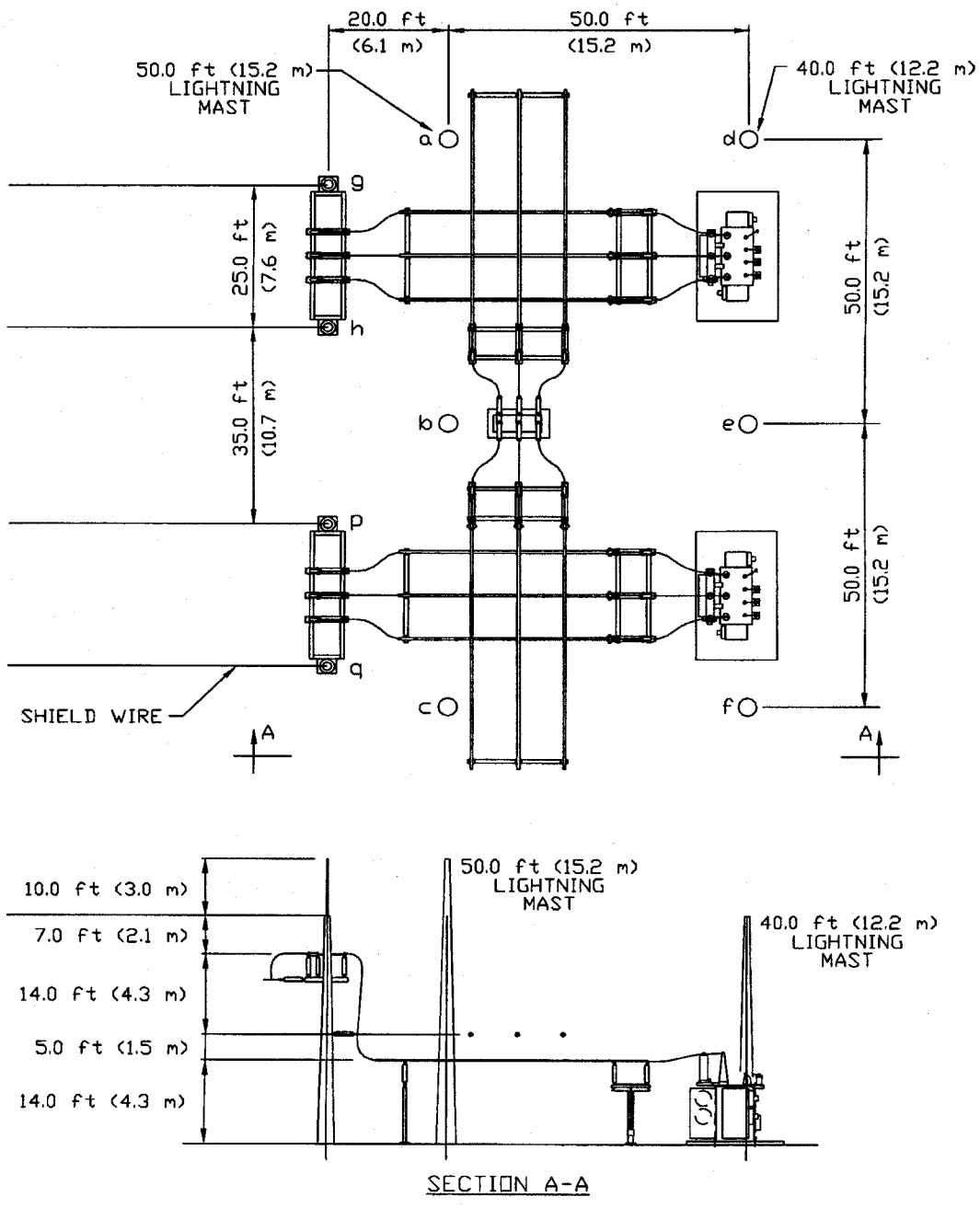

Figure B.4-1 —Design of mast shielding system using program SBSHLD

Copyright © 1996 IEEE All Rights Reserved

Copyright The Institute of Electrical and Electronics Engineers, Inc.
Provided by IHS under license with IEEE
No reproduction or networking permitted without license from IHS
Not for Resale

SUBSTATION SHIELDING USING
MOUSA'S ELECTROGEOMETRIC MODEL
Version No. 4 (April 1990)

NAME OF SUBSTATION: 69 kV Ex.
DATE OF RUN: 1990-08-16

SUBSTATION CHARACTERISTICS
- -

TYPE OF SYSTEM:	AC
PHASE-TO-PHASE VOLTAGE:	69.000 kV
INSULATION OF HIGHEST LEVEL BUS:	POST INSULATORS
BIL OF POST INSULATORS:	350.00 kV
BUS HEIGHT:	5.790 m (19 ft)
OUTSIDE DIAMETER OF CONDUCTORS:	114.30 mm (4.5 in)
NO. OF CONDUCTORS PER PHASE:	1

INTERMEDIATE CALCULATIONS (FOR INFORMATION ONLY)
- -

MAX. PERMISSIBLE INSULATOR VOLTAGE:	350.000 kV
CORONA RADIUS INCLUDING BUNDLE EFFECT:	
CALCULATED VALUE:	0.0571 m
NO. OF ITERATIONS USED:	2
RESIDUAL VALUE OF CORONA RADIUS FUNCTION:	-9.113E-12

EFFECTIVE SURGE IMPEDANCE:	318.681 ohms
CRITICAL STROKE CURRENT:	2.027 kA
CRITICAL STRIKING DISTANCE:	11.398 m (37.4 ft)

NOTE: The corona radius function is obtained using the Newton-Raphson iteration. The no. of iterations used and the residual value of the corona radius function are included in the above printout.

DESIGN OF SHIELDING SYSTEM
- -

TYPE OF SHIELDING SYSTEM: MASTS
ALL MASTS ASSUMED TO BE FREE STANDING.

ADJACENT MASTS FORM RECTANGLES HAVING DIMENSIONS:
15.240 AND 15.240 m
INPUT MAST HEIGHT: 15.240 m (50 ft)
ABOVE MAST HEIGHT ADEQUATELY PROTECTS AGAINST STROKES
ARRIVING DIRECTLY ABOVE THE SUBSTATION
(MINIMUM NEEDED HEIGHT = 11.045 m)

EXPOSURE TO STROKES ARRIVING ON SIDES OF SUBSTATION:
POINT LOCATED AT 4.270, -5.000 IS SHIELDED, EPSI = -0.418 m
POINT LOCATED AT 5.790, -5.000 IS SHIELDED, EPSI = -1.447 m

NOTE: EPSI IS THE MAX. PERMISSIBLE HORIZONTAL SEPARATION FROM THE OUTERMOST ROW OF MASTS FOR A BUS POINT AT THE SPECIFIED HEIGHT.

Exhibit B.4-1 —Output of program SBSHLD for module abed; mast height equals 50 ft

Copyright © 1996 IEEE All Rights Reserved

Copyright The Institute of Electrical and Electronics Engineers, Inc.
Provided by IHS under license with IEEE
No reproduction or networking permitted without license from IHS
Not for Resale

SUBSTATION SHIELDING USING
MOUSA'S ELECTROGEOMETRIC MODEL
VERSION No. 4 (April 1990)

NAME OF SUBSTATION: 69 kV Ex.
DATE OF RUN: 1990-08-17

SUBSTATION CHARACTERISTICS
- -

TYPE OF SYSTEM:	AC
PHASE-TO-PHASE VOLTAGE:	69.000 kV
INSULATION OF HIGHEST LEVEL BUS:	POST INSULATORS
BIL OF POST INSULATORS:	350.00 kV
BUS HEIGHT:	10.060 m (33 ft)
OUTSIDE DIAMETER OF CONDUCTORS:	25.40 mm (1 in)
NO. OF CONDUCTORS PER PHASE:	1

INTERMEDIATE CALCULATIONS (FOR INFORMATION ONLY)
- - - - - - - - - - - - - - - - - - - -

SUBSTATION SHIELDING USING
MOUSA'S ELECTROGEOMETRIC MODEL
VERSION No. 4 (April 1990)

NAME OF SUBSTATION: 69 kV Ex.
DATE OF RUN: 1990-08-16

SUBSTATION CHARACTERISTICS
- -

TYPE OF SYSTEM:	AC
PHASE-TO-PHASE VOLTAGE:	69.000 kV
INSULATION OF HIGHEST LEVEL BUS:	POST INSULATORS
BIL OF POST INSULATORS:	350.00 kV
BUS HEIGHT:	5.790 m (19 ft)
OUTSIDE DIAMETER OF CONDUCTORS:	114.30 mm (4.5 in)
NO. OF CONDUCTORS PER PHASE:	1

INTERMEDIATE CALCULATIONS (FOR INFORMATION ONLY)
- -

MAX. PERMISSIBLE INSULATOR VOLTAGE:	350.000 kV
CORONA RADIUS INCLUDING BUNDLE EFFECT:	
CALCULATED VALUE:	0.0571 m
NO. OF ITERATIONS USED:	2
RESIDUAL VALUE OF CORONA RADIUS FUNCTION:	-9.113E-12

EFFECTIVE SURGE IMPEDANCE:	318.681 ohms
CRITICAL STROKE CURRENT:	2.027 kA
CRITICAL STRIKING DISTANCE:	11.398 m (37.4 ft)

NOTE: The corona radius function is obtained using the Newton-Raphson iteration. The no. of iterations used and the residual value of the corona radius function are included in the above printout.

DESIGN OF SHIELDING SYSTEM
- -

TYPE OF SHIELDING SYSTEM: MASTS
ALL MASTS ASSUMED TO BE FREE STANDING.

ADJACENT MASTS FORM RECTANGLES HAVING DIMENSIONS:
15.240 AND 15.240 m
INPUT MAST HEIGHT: 12.190 m (40 ft)
ABOVE MAST HEIGHT ADEQUATELY PROTECTS AGAINST STROKES
ARRIVING DIRECTLY ABOVE THE SUBSTATION
(MINIMUM NEEDED HEIGHT = 11.045 m)

EXPOSURE TO STROKES ARRIVING ON SIDES OF SUBSTATION:
POINT LOCATED AT 4.270, -5.000 IS SHIELDED, EPSI = -0.418 m
POINT LOCATED AT 5.790, -5.000 IS SHIELDED, EPSI = -1.447 m

NOTE: EPSI IS THE MAX. PERMISSIBLE HORIZONTAL SEPARATION FROM THE OUTERMOST ROW OF MASTS FOR A BUS POINT AT THE SPECIFIED HEIGHT.

Exhibit B.4-3 —Output of program SBSHLD for module abed; mast height equals 40 ft

Copyright © 1996 IEEE All Rights Reserved

Copyright The Institute of Electrical and Electronics Engineers, Inc.
Provided by IHS under license with IEEE
No reproduction or networking permitted without license from IHS Not for Resale

B.4.2 Sample calculations for a 500/230 kV switchyard

The data used in this case are those of the McIntosh 500/230 kV Substation of Georgia Power Company. This example illustrates the design procedure when more than one voltage level is present in a switchyard. Figures B.4-2 and B.4-3 give the plans of the 500 kV and 230 kV switchyards, respectively. The thick lines show the first phase of the development, while the thin lines indicate future expansion.

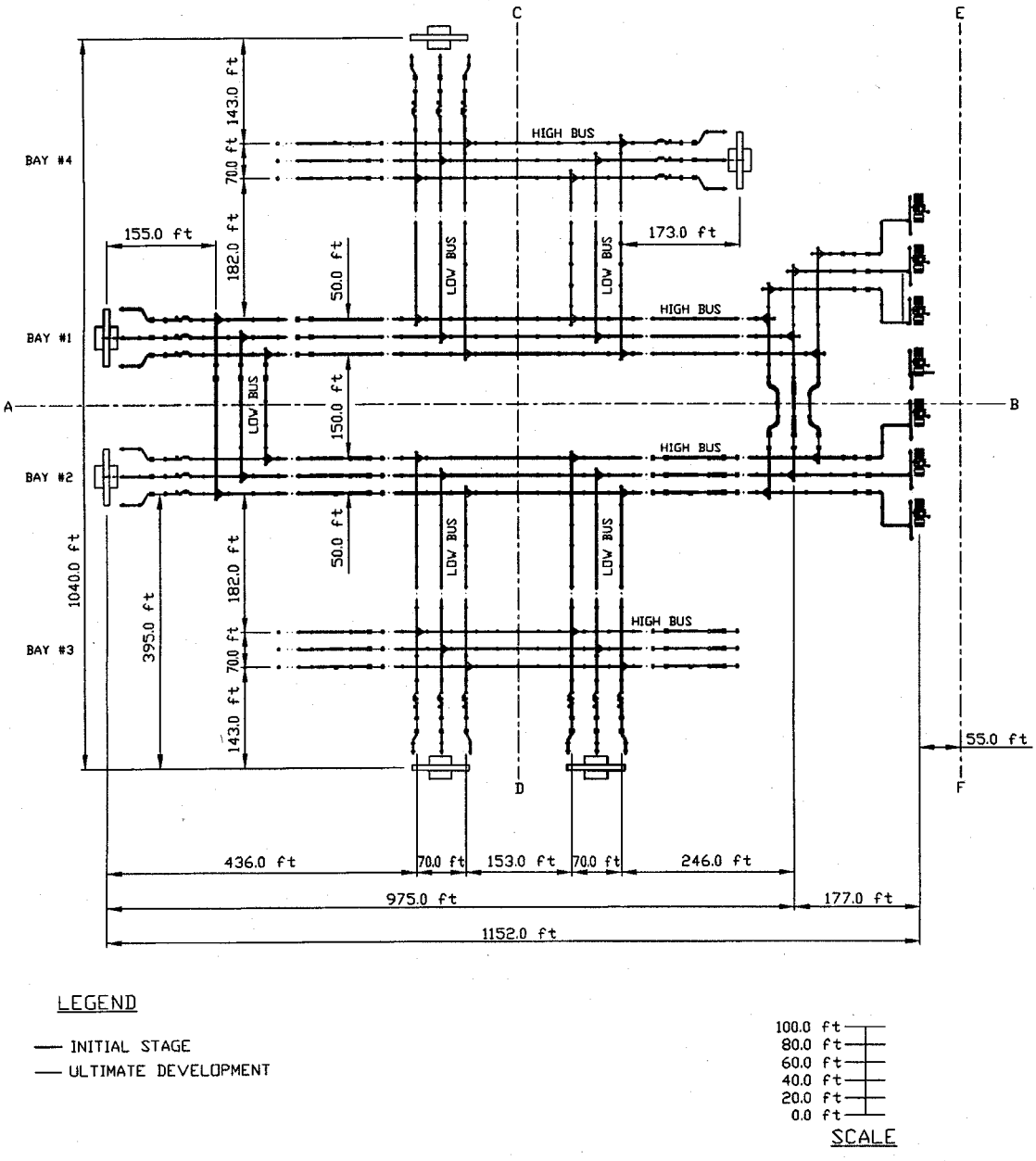

Figure B.4.2(a) —Plan of the McIntosh 500 kV switchyard

Copyright © 1996 IEEE All Rights Reserved

Copyright The Institute of Electrical and Electronics Engineers, Inc.
Provided by IHS under license with IEEE
No reproduction or networking permitted without license from IHS
Not for Resale

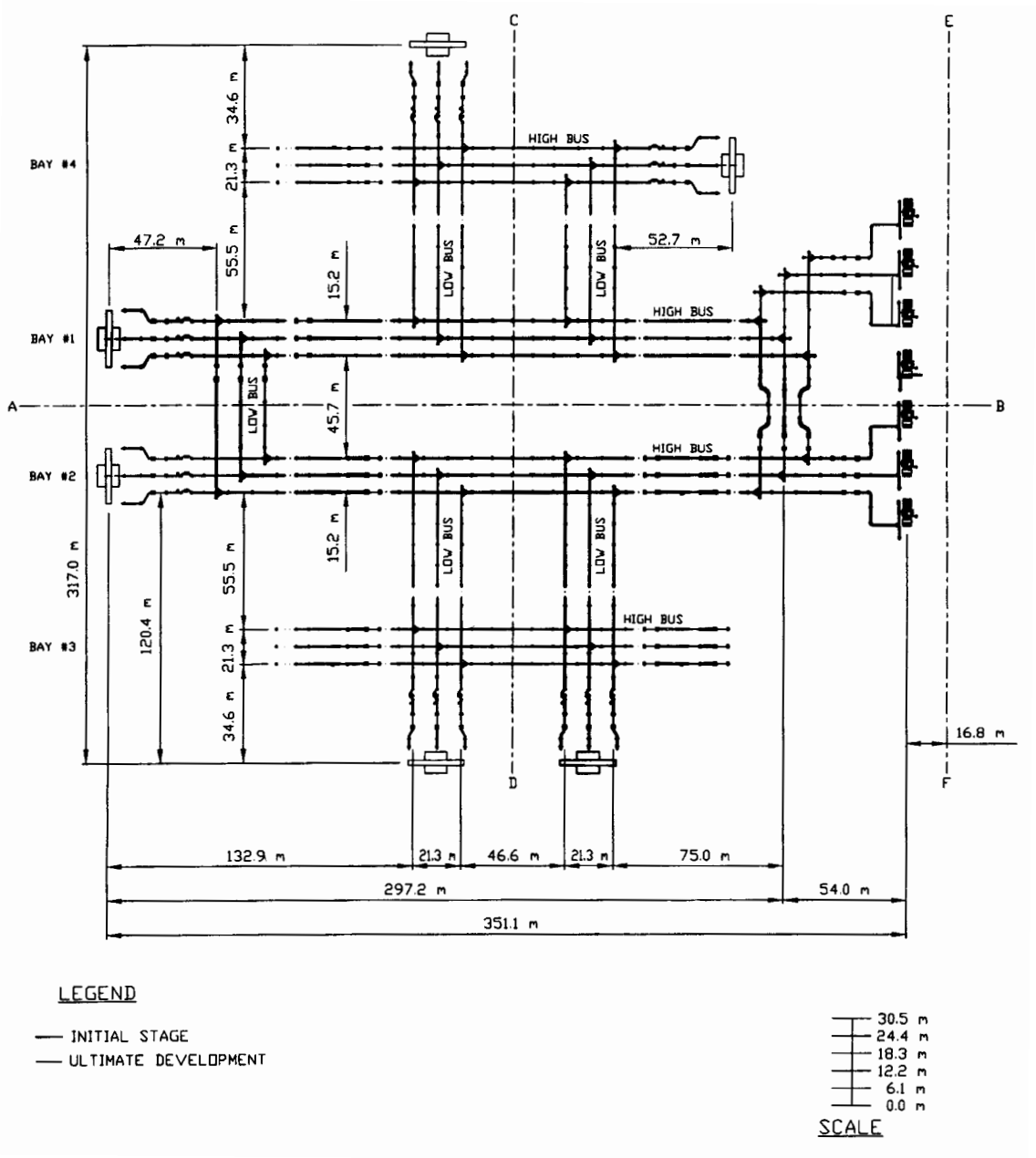

Figure B.4-2(b) —Plan of the McIntosh 500 kV switchyard

Copyright © 1996 IEEE All Rights Reserved

Copyright The Institute of Electrical and Electronics Engineers, Inc.
Provided by IHS under license with IEEE
No reproduction or networking permitted without license from IHS
Not for Resale

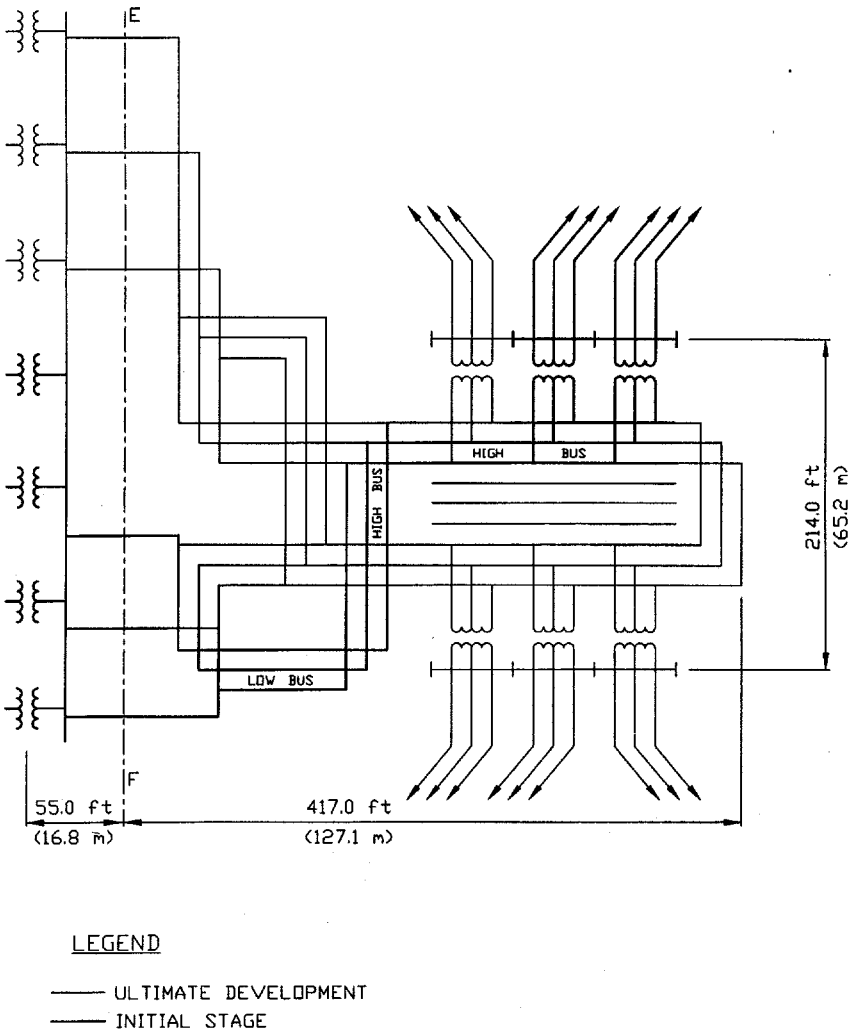

Figure B.4-3 —Plan of McIntosh 230 kV switchyard

B.4.2.1 The 500 kV switchyard—Shield wire option

It is preferable that the design of the shielding system takes the ultimate development of the station into consideration. Examining figure B.4-2(b) reveals that the system is approximately symmetrical around line AB. Hence one of the shield wires will be built along that line. A preliminary computer run using the given bus data revealed that a 45.7 m (150 ft) separation between adjacent shield wires would be reasonable. This determines the locations of two more shield wires, one on each side of line AB (see figure B.4-4(b)). To limit the span of the shield wires to 282.9 m (600 ft) or less, intermediate points of support (B, C, and D) will be used. The location of line EF on the right-hand-side was selected taking the details of the layout of the equipment into consideration. The locations of structures Q, A, and P were similarly determined. Note that structure A could have been eliminated if both attachment points K and L were available. In that case, two wires BK and BL would have been used instead of wire BA.

Copyright © 1996 IEEE All Rights Reserved

Copyright The Institute of Electrical and Electronics Engineers, Inc.
Provided by IHS under license with IEEE
No reproduction or networking permitted without license from IHS
Not for Resale

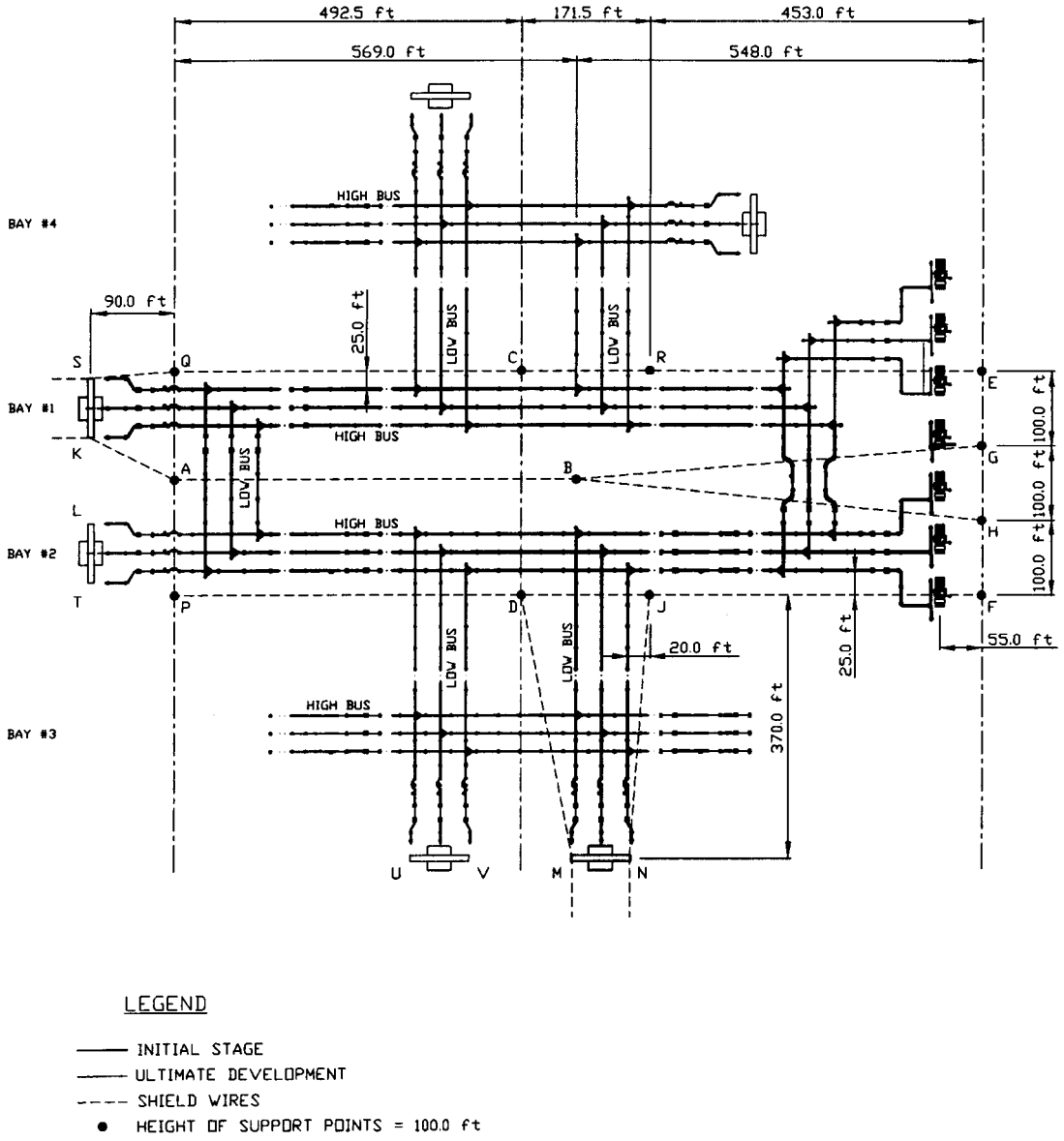

Figure B.4-4(a) —Shielding of the Mcintosh 500 kV switchyard using shield wires

Copyright © 1996 IEEE All Rights Reserved

Copyright The Institute of Electrical and Electronics Engineers, Inc.
Provided by IHS under license with IEEE
No reproduction or networking permitted without license from IHS
Not for Resale

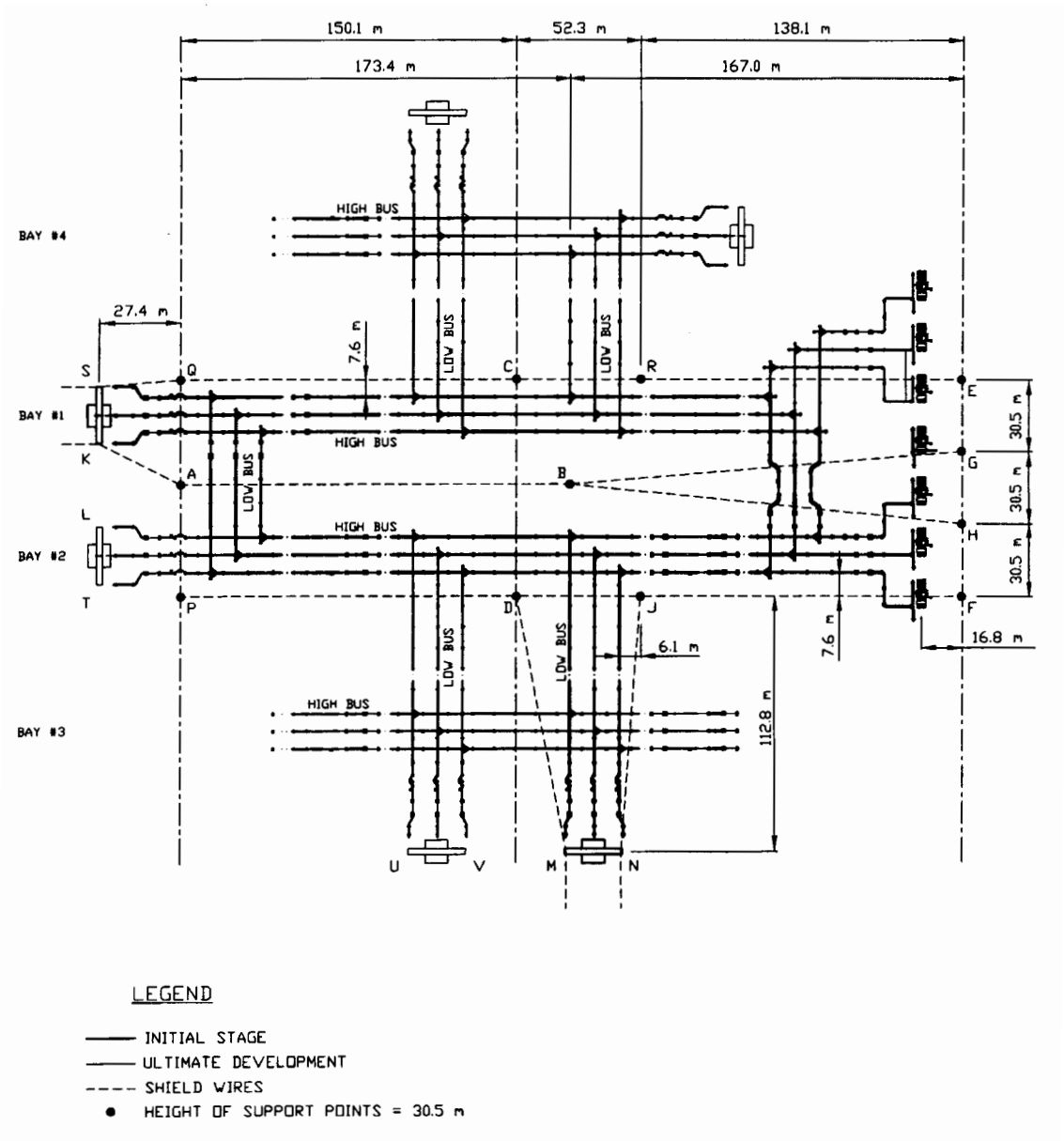

Figure B.4-4(b) —Shielding of the McIntosh 500 kV switchyard shield wires

Four rather than three support points were used on line EF to accommodate the need to decrease the separation between adjacent shield wires on the 230 kV side. The resulting 30.48 m (100 ft) separation was found to be suitable for the 230 kV side based on a preliminary computer run using the parameters of the 230 kV bus.

Shielding the bus below line PF requires a shield wire system that is approximately perpendicular to the above system. Points M and N are already available for attaching shield wires. Point D was selected taking into consideration the shielding requirement of the future bus to the left of line MD. Point J was determined by the need to provide the necessary electrical clearance.

The points supporting the shield wires of the incoming 500 kV lines (points K and M for example) are 30 m (98.5 ft) high. Hence a 30.48 m (100 ft) height was selected. for the shield wire support points within the 500 kV switchyard (including the points E, G, H, and F). Using a maximum bus height of 16.8 m (55 ft), it was determined from Subshield

Copyright © 1996 IEEE All Rights Reserved

Copyright The Institute of Electrical and Electronics Engineers, Inc.
Provided by IHS under license with IEEE
No reproduction or networking permitted without license from IHS
Not for Resale

that the 30.48 m (100 ft) high structures were adequate (see Exhibit B.4-4). For strokes arriving outside the shield wire system, shielding is adequate for points located outside the shield wire system by up to 3.2 m (10.5 ft). The 500 kV bus connection to the transformer is outside the protected zone. The bus layout at that point was done without regard to the shielding requirements, but it appears that it can be easily modified to achieve compatibility.

B.4.2.2 The 230 kV switchyard—Shield wire option

Figure B.4-5 shows the proposed shield wire system. This takes the future development of the station into consideration but prebuilds only the shield wires needed for the initial bus development. The points supporting the shield wires of the incoming 230 kV lines are 18.3 m (60 ft) high. Hence this value was also selected for the 230 kV switchyard. The plan in figure B.4-5 involves only three additional structures beyond those needed for the 500 kV side:

a) A 18.3 m (60 ft) high support structure at point Z
b) Prebuilding the 18.3 m (60 ft) high station structures at points X and W

The maximum separation between adjacent shield wires in figure B.4-5 is 32.6 m (107 ft). The computer run Exhibit B.4-5 indicates that a 8.5 m (28 ft) high bus is adequately protected. Note that a short section of the bus near points H and F is 11.9 m (39 ft) high. The computer run Exhibit B.4-6 shows that the is 11.9 m (39 ft) high bus is adequately protected against strokes arriving between the shield wires. Shielding, however, is not provided for strokes arriving outside the shield wire system. It appears that this problem can be solved by revising the layout of the 230 kV connection to the 500/230 kV transformer near point F.

B.4.2.3 The mast option

The mast heights were taken equal to 30.48 m (100 ft) and 18.3 m (60 ft) for the 500 kV and 230 kV switchyards, respectively. These are the same values used for the shield wire support points. In the 500 kV switchyard, the adopted approach was to replace each of the shield wires selected earlier by a row of masts. In the direction CD in figure B.4-2(b), the separation is fixed by the width of the bay, which is 45.7 m (150 ft). In direction AB, the computer run Exhibit B.4-7 indicates that a maximum separation of about 33.5 m (110 ft) would be reasonable. The corresponding radial distance between the masts at opposite corners of the rectangle is 56.7 m (186 ft). This is the limiting distance in locating the masts in the transformer area where it was not possible to use rectangular shapes. Figure B.4-6(b) gives the mast arrangement for the 500 kV switchyard.

Regarding the 230 kV switchyard, distance OY in figure B.4-7 is 25.8 m (84.5 ft). In the perpendicular direction XY, a value equal to 29.3 m (96 ft), which is twice the bay width, was selected. Exhibit B.4-8 gives the associated computer printout. The corresponding radial distance between masts at opposite corners of the rectangle is 39 m (128 ft). This value was used as the criterion at other points of the 230 kV switchyard where rectangular shapes could not be used. Figure B.4-7 shows the proposed layout. This has a maximum radial separation between masts equal to about 33.5 m (110 ft).

Copyright © 1996 IEEE All Rights Reserved

Copyright The Institute of Electrical and Electronics Engineers, Inc.
Provided by IHS under license with IEEE
No reproduction or networking permitted without license from IHS Not for Resale

SUBSTATION SHIELDING USING
MOUSA'S ELECTROGEOMETRIC MODEL
VERSION No. 4.1 (February 1993)

NAME OF SUBSTATION: McIntosh
DATE OF RUN: 1993-04-30

SUBSTATION CHARACTERISTICS

TYPE OF SYSTEM:	AC
PHASE-TO-PHASE VOLTAGE:	500.000 kV
INSULATION OF HIGHEST LEVEL BUS:	POST INSULATORS
BIL OF POST INSULATORS:	1800.000 kV
BUS HEIGHT:	16.760 m (55 ft)
ESTIMATED SAG OF SHIELD WIRE:	3.000 m
OUTSIDE DIAMETER OF CONDUCTORS:	114.30 mm (4.5 in)
NO. OF CONDUCTORS PER PHASE:	1
BAY WIDTH:	45.720 m (150 ft)

INTERMEDIATE CALCULATIONS (FOR INFORMATION ONLY)

MAX. PERMISSIBLE INSULATOR VOLTAGE:	1800.000 kV
CORONA RADIUS INCLUDING BUNDLE EFFECT:	
CALCULATED VALUE:	0.2437 m
NO. OF ITERATIONS USED:	2
RESIDUAL VALUE OF CORONA RADIUS FUNCTION:	-3.6514E-07

EFFECTIVE SURGE IMPEDANCE:	336.140 ohms
CRITICAL STROKE CURRENT:	9.109 kA
CRITICAL STRIKING DISTANCE:	30.268 m (99.3 ft)

NOTE: The corona radius function is obtained using the Newton-Raphson iteration. The no. of iterations used and the residual value of the corona radius function are included in the above printout.

DESIGN OF SHIELDING SYSTEM

TYPE OF SHIELDING SYSTEM:	WIRES
SEPARATION BETWEEN SHIELD WIRES:	45.720 m (150 ft)

SHIELDING AGAINST STROKES ARRIVING DIRECTLY ABOVE STATION:
INPUT HEIGHT OF SHIELD WIRES AT SUPPORT POINTS: 30.480 m (100 ft)
ABOVE HEIGHT ADEQUATELY PROTECTS AGAINST STROKES ARRIVING DIRECTLY ABOVE SUBSTATION.
(MINIMUM NEEDED HEIGHT = 30.189 m)

EXPOSURE TO STROKES ARRIVING ON SIDES OF SUBSTATION:
POINT LOCATED AT 16.760, 0.000 IS SHIELDED, EPSI = -3.181 m

NOTE: EPSI IS THE MAX. PERMISSIBLE HORIZONTAL SEPARATION FROM THE SHIELD WIRE FOR A BUS POINT AT THE SPECIFIED HEIGHT.

Exhibit B.4-4 —Output of SBSHLD for the 500 kV switchyard; case of shield wires

Copyright © 1996 IEEE All Rights Reserved

Copyright The Institute of Electrical and Electronics Engineers, Inc.
Provided by IHS under license with IEEE
No reproduction or networking permitted without license from IHS
Not for Resale

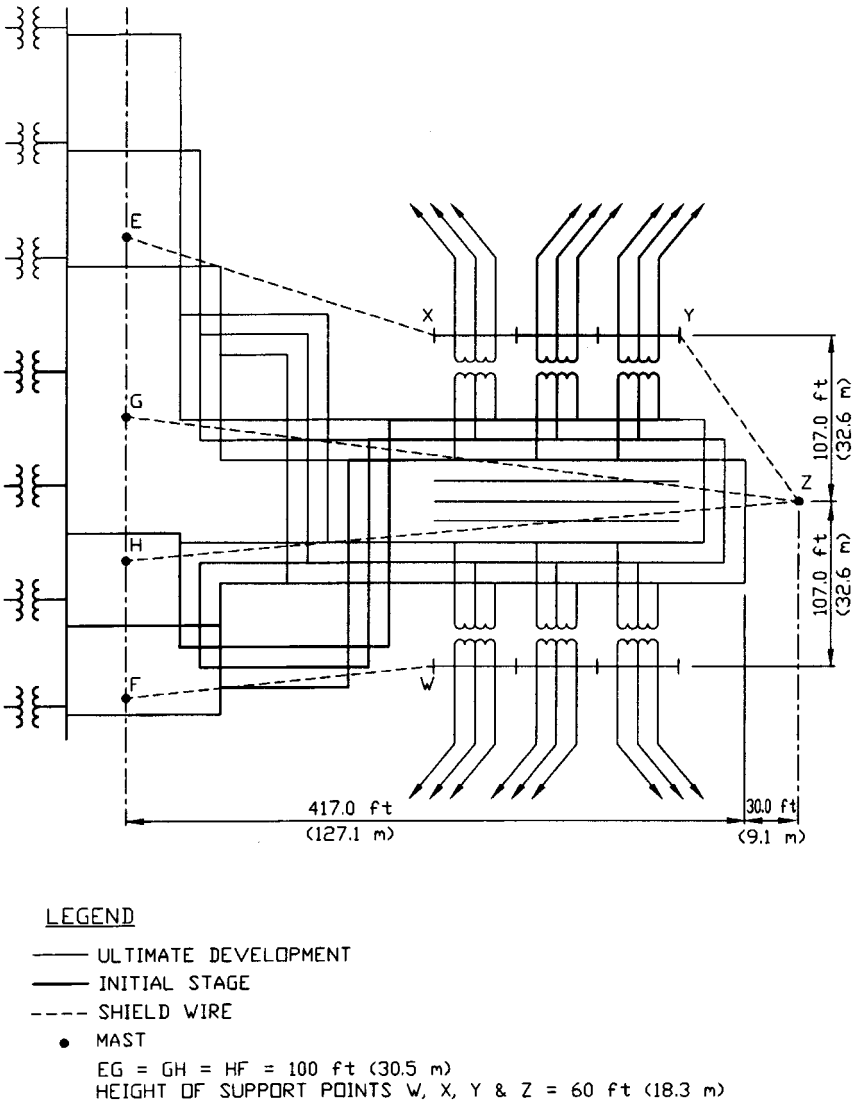

Figure B.4-5 —Shielding of the Mcintosh 230 kV switchyard using shield wires

Copyright © 1996 IEEE All Rights Reserved

Copyright The Institute of Electrical and Electronics Engineers, Inc.
Provided by IHS under license with IEEE
No reproduction or networking permitted without license from IHS
Not for Resale

SUBSTATION SHIELDING USING
MOUSA'S ELECTROGEOMETRIC MODEL
VERSION No. 4.1 (February 1993)

NAME OF SUBSTATION: McIntosh
DATE OF RUN: 1993-04-30

SUBSTATION CHARACTERISTICS

TYPE OF SYSTEM:	AC
PHASE-TO-PHASE VOLTAGE:	230.000 kV
INSULATION OF HIGHEST LEVEL BUS:	POST INSULATORS
BIL OF POST INSULATORS:	900.000 kV
BUS HEIGHT:	8.530 m (28 ft)
ESTIMATED SAG OF SHIELD WIRE:	1.000 m
OUTSIDE DIAMETER OF CONDUCTORS:	135.00 mm (5.5 in)
NO. OF CONDUCTORS PER PHASE:	1
BAY WIDTH:	32.610 m (107 ft)

INTERMEDIATE CALCULATIONS (FOR INFORMATION ONLY)

MAX. PERMISSIBLE INSULATOR VOLTAGE:	900.000 kV
CORONA RADIUS INCLUDING BUNDLE EFFECT:	
CALCULATED VALUE:	0.1213 m
NO. OF ITERATIONS USED:	2
RESIDUAL VALUE OF CORONA RADIUS FUNCTION:	-1.5516E-07

EFFECTIVE SURGE IMPEDANCE:	313.864 ohms
CRITICAL STROKE CURRENT:	4.992 kA
CRITICAL STRIKING DISTANCE:	20.475 m (67.18 ft)

NOTE: The corona radius function is obtained using the Newton-Raphson iteration. The no. of iterations used and the residual value of the corona radius function are included in the above printout.

DESIGN OF SHIELDING SYSTEM

TYPE OF SHIELDING SYSTEM:	WIRES
SEPARATION BETWEEN SHIELD WIRES:	32.610 m (107 ft)

SHIELDING AGAINST STROKES ARRIVING DIRECTLY ABOVE STATION:
INPUT HEIGHT OF SHIELD WIRES AT SUPPORT POINTS: 18.290 m (60 ft)
ABOVE HEIGHT ADEQUATELY PROTECTS AGAINST STROKES ARRIVING DIRECTLY ABOVE SUBSTATION.
(MINIMUM NEEDED HEIGHT = 17.621 m)

EXPOSURE TO STROKES ARRIVING ON SIDES OF SUBSTATION:
POINT LOCATED AT 8.530, 0.000 IS SHIELDED, EPSI = -3.728 m

NOTE: EPSI IS THE MAX. PERMISSIBLE HORIZONTAL SEPARATION FROM THE SHIELD WIRE FOR A BUS POINT AT THE SPECIFIED HEIGHT.

Exhibit B.4-5 —Output of SBSHLD for the 28 ft (8.5 m) high 230 kV bus; case of shield wires

Copyright © 1996 IEEE All Rights Reserved

Copyright The Institute of Electrical and Electronics Engineers, Inc.
Provided by IHS under license with IEEE
No reproduction or networking permitted without license from IHS
Not for Resale

SUBSTATION SHIELDING USING
MOUSA'S ELECTROGEOMETRIC MODEL
VERSION No. 4.1 (February 1993)

NAME OF SUBSTATION: McIntosh
DATE OF RUN: 1993-04-30

SUBSTATION CHARACTERISTICS
- -

TYPE OF SYSTEM:	AC
PHASE-TO-PHASE VOLTAGE:	230.000 kV
INSULATION OF HIGHEST LEVEL BUS:	POST INSULATORS
BIL OF POST INSULATORS:	900.000 kV
BUS HEIGHT:	11.890 m (39 ft)
ESTIMATED SAG OF SHIELD WIRE:	2.000 m
OUTSIDE DIAMETER OF CONDUCTORS:	135.00 m (5.5 in)
NO. OF CONDUCTORS PER PHASE:	1
BAY WIDTH:	30.480 m (100 ft)

INTERMEDIATE CALCULATIONS (FOR INFORMATION ONLY)
- -

MAX. PERMISSIBLE INSULATOR VOLTAGE:	900.000 kV
CORONA RADIUS INCLUDING BUNDLE EFFECT:	
CALCULATED VALUE:	0.1120 m
NO. OF ITERATIONS USED:	2
RESIDUAL VALUE OF CORONA RADIUS FUNCTION:	-1.2082E-09

EFFECTIVE SURGE IMPEDANCE:	336.341 ohms
CRITICAL STROKE CURRENT:	4.659 kA
CRITICAL STRIKING DISTANCE:	19.575 m (64.22 ft)

NOTE: The corona radius function is obtained using the Newton-Raphson iteration. The no. of iterations used and the residual value of the corona radius function are included in the above printout.

DESIGN OF SHIELDING SYSTEM
- -

TYPE OF SHIELDING SYSTEM:	WIRES
SEPARATION BETWEEN SHIELD WIRES:	30.480 m (100 ft)

SHIELDING AGAINST STROKES ARRIVING DIRECTLY ABOVE STATION:
INPUT HEIGHT OF SHIELD WIRES AT SUPPORT POINTS: 30.480 m (100 ft)
ABOVE HEIGHT ADEQUATELY PROTECTS AGAINST STROKES ARRIVING DIRECTLY ABOVE SUBSTATION.
(MINIMUM NEEDED HEIGHT = 21.180 m)

EXPOSURE TO STROKES ARRIVING ON SIDES OF SUBSTATION:
POINT LOCATED AT 11.890, 0.000 IS SHIELDED, EPSI = -1.748 m

NOTE: EPSI IS THE MAX. PERMISSIBLE HORIZONTAL SEPARATION FROM THE SHIELD WIRE FOR A BUS POINT AT THE SPECIFIED HEIGHT.

Exhibit B.4-6 —Output of SBSHLD for the 39 ft (11.9 m) high bus; case of shield wires

Copyright © 1996 IEEE All Rights Reserved

Copyright The Institute of Electrical and Electronics Engineers, Inc.
Provided by IHS under license with IEEE
No reproduction or networking permitted without license from IHS
Not for Resale

SUBSTATION SHIELDING USING
MOUSA'S ELECTROGEOMETRIC MODEL
VERSION No. 4.1 (February 1993)

NAME OF SUBSTATION: McIntosh
DATE OF RUN: 1993-04-30

SUBSTATION CHARACTERISTICS

TYPE OF SYSTEM:	AC
PHASE-TO-PHASE VOLTAGE:	500.000 kV
INSULATION OF HIGHEST LEVEL BUS:	POST INSULATORS
BIL OF POST INSULATORS:	1800.000 kV
BUS HEIGHT:	16.760 m (55 ft)
OUTSIDE DIAMETER OF CONDUCTORS:	114.30 mm (4.5 in)
NO. OF CONDUCTORS PER PHASE:	1

INTERMEDIATE CALCULATIONS (FOR INFORMATION ONLY)

MAX. PERMISSIBLE INSULATOR VOLTAGE:	1800.000 kV
CORONA RADIUS INCLUDING BUNDLE EFFECT:	
CALCULATED VALUE:	0.2437 m
NO. OF ITERATIONS USED:	2
RESIDUAL VALUE OF CORONA RADIUS FUNCTION:	-3.6514E-07

EFFECTIVE SURGE IMPEDANCE:	336.140 ohms
CRITICAL STROKE CURRENT:	9.109 kA
CRITICAL STRIKING DISTANCE:	30.268 m (99.3 ft)

NOTE: The corona radius function is obtained using the Newton-Raphson iteration. The no. of iterations used and the residual value of the corona radius function are included in the above printout.

DESIGN OF SHIELDING SYSTEM

TYPE OF SHIELDING SYSTEM: MASTS
ALL MASTS ASSUMED TO BE FREE STANDING.

ADJACENT MASTS FORM RECTANGLES HAVING DIMENSIONS:
45.720 AND 33.530 m (150 ft x 110 ft)
INPUT MAST HEIGHT: 30.480 m (100 ft)
ABOVE MAST HEIGHT ADEQUATELY PROTECTS AGAINST STROKES ARRIVING DIRECTLY ABOVE THE SUBSTATION.
(MINIMUM NEEDED HEIGHT = 30.374 m)

EXPOSURE TO STROKES ARRIVING ON SIDES OF SUBSTATION:
POINT LOCATED AT 16.760, 0.000 IS SHIELDED, EPSI = -7.248 m

NOTE: EPSI IS THE MAX. PERMISSIBLE HORIZONTAL SEPARATION FROM THE OUTERMOST ROW OF MASTS FOR A BUS POINT AT THE SPECIFIED HEIGHT.

Exhibit B.4-7 —Output of SBSHLD for the 500 kV switchyard; case of masts

Copyright © 1996 IEEE All Rights Reserved

Copyright The Institute of Electrical and Electronics Engineers, Inc.
Provided by IHS under license with IEEE
No reproduction or networking permitted without license from IHS Not for Resale

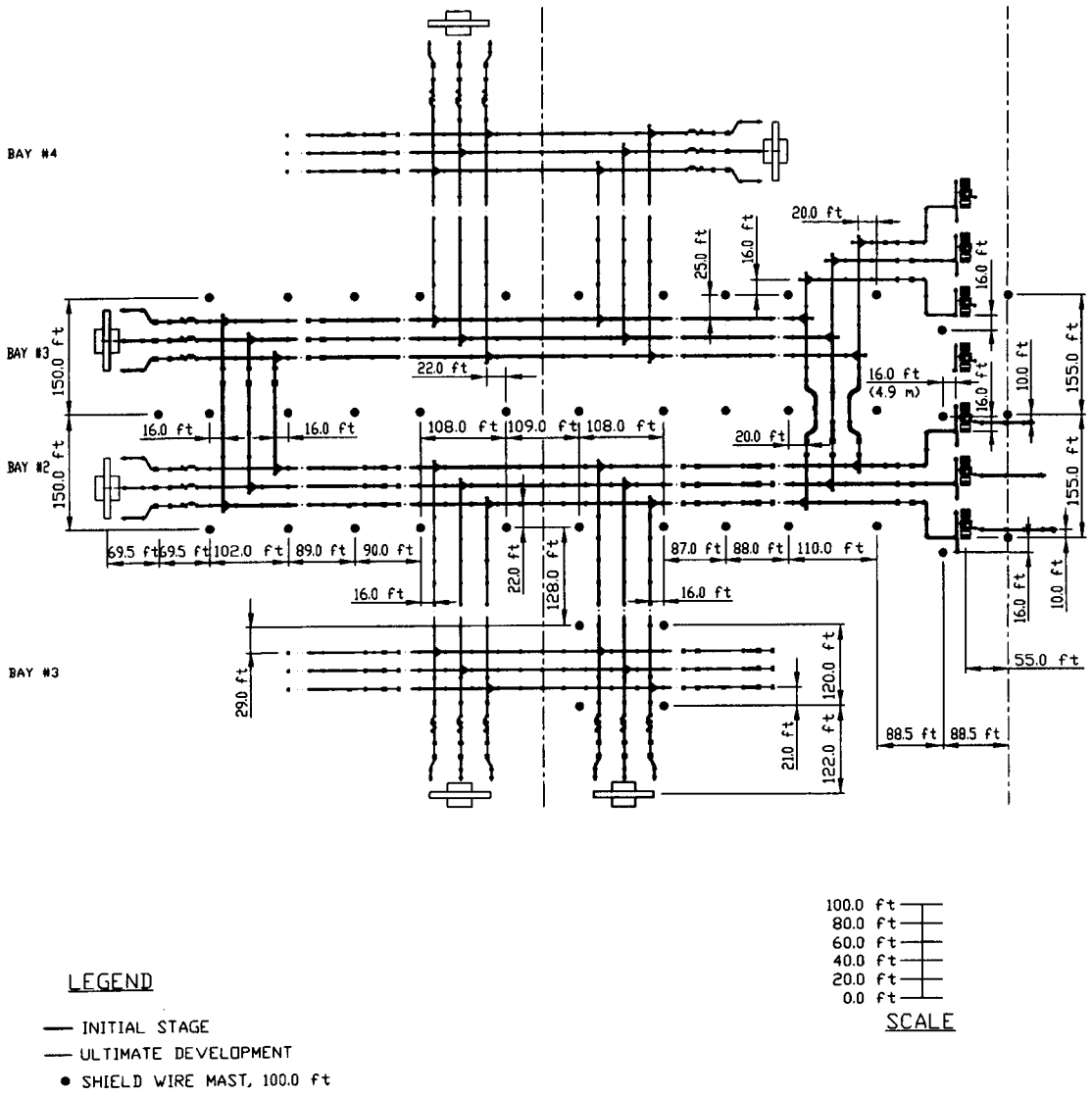

Figure B.4-6(a) —Shielding of the 500 kV switchyard using masts

Copyright © 1996 IEEE All Rights Reserved

Copyright The Institute of Electrical and Electronics Engineers, Inc.
Provided by IHS under license with IEEE
No reproduction or networking permitted without license from IHS
Not for Resale

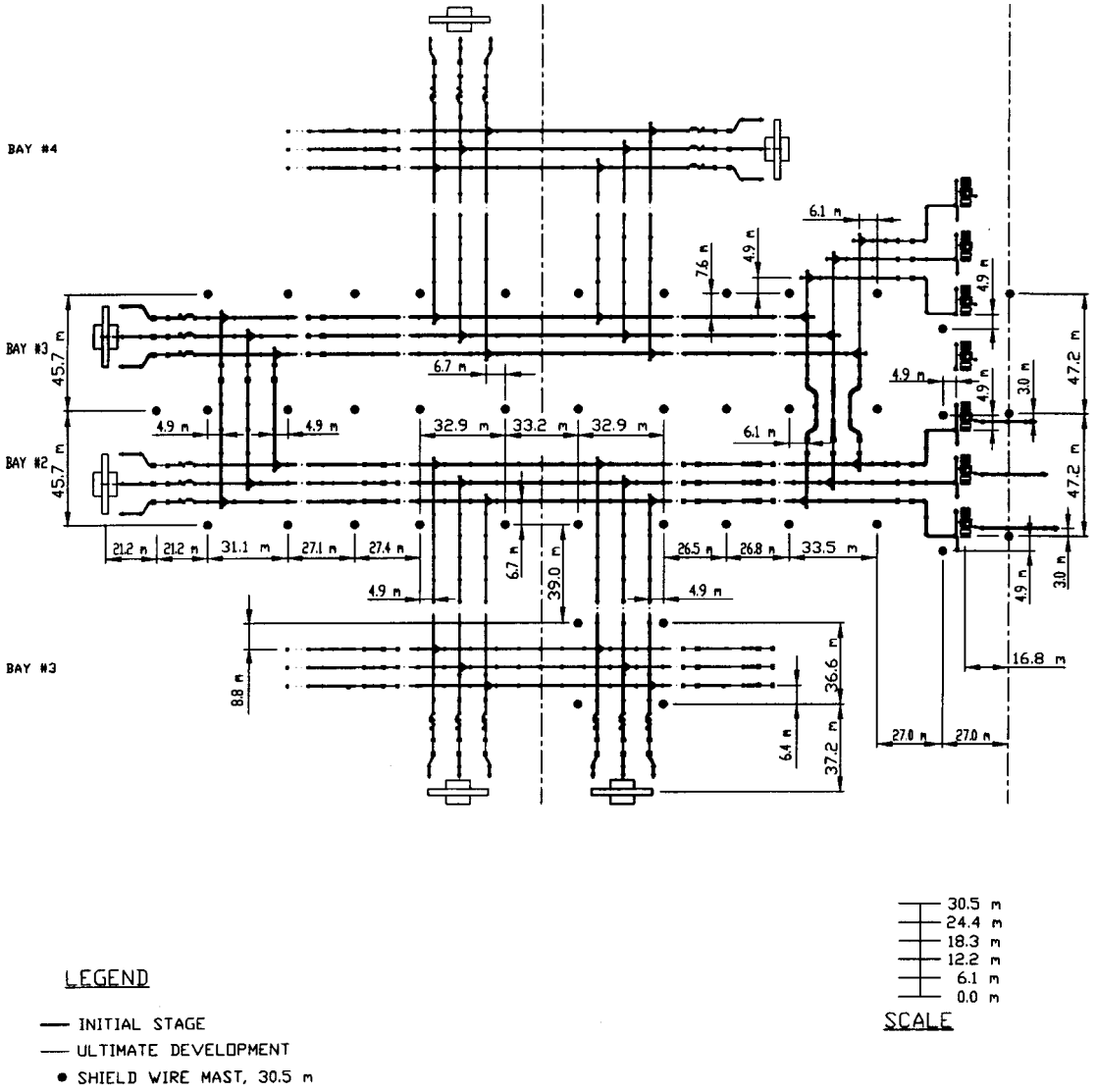

Figure B.4-6(b) —Shielding of the 500 kV switchyard using masts

Copyright © 1996 IEEE All Rights Reserved

Copyright The Institute of Electrical and Electronics Engineers, Inc.
Provided by IHS under license with IEEE
No reproduction or networking permitted without license from IHS
Not for Resale

SUBSTATION SHIELDING USING
MOUSA'S ELECTROGEOMETRIC MODEL
VERSION No. 4.1 (February 1993)

NAME OF SUBSTATION: McIntosh
DATE OF RUN: 1993-04-30

SUBSTATION CHARACTERISTICS
- -

TYPE OF SYSTEM:	AC
PHASE-TO-PHASE VOLTAGE:	230.000 kV
INSULATION OF HIGHEST LEVEL BUS:	POST INSULATORS
BIL OF POST INSULATORS:	900.000 kV
BUS HEIGHT:	8.530 m (28 ft)
OUTSIDE DIAMETER OF CONDUCTORS:	135 mm (5.5 in)
NO. OF CONDUCTORS PER PHASE:	1

INTERMEDIATE CALCULATIONS (FOR INFORMATION ONLY)
- -

MAX. PERMISSIBLE INSULATOR VOLTAGE:	900.000 kV
CORONA RADIUS INCLUDING BUNDLE EFFECT:	
CALCULATED VALUE:	0.1213 m
NO. OF ITERATIONS USED:	2
RESIDUAL VALUE OF CORONA RADIUS FUNCTION:	-1.5516E-07

EFFECTIVE SURGE IMPEDANCE:	313.864 ohms
CRITICAL STROKE CURRENT:	4.992 kA
CRITICAL STRIKING DISTANCE:	20.475 m (67.18 ft)

NOTE: The corona radius function is obtained using the Newton-Raphson iteration. The no. of iterations used and the residual value of the corona radius function are included in the above printout.

DESIGN OF SHIELDING SYSTEM
- -

TYPE OF SHIELDING SYSTEM: MASTS
ALL MASTS ASSUMED TO BE FREE STANDING.

ADJACENT MASTS FORM RECTANGLES HAVING DIMENSIONS:
25.760 AND 29.260 m (84.5 ft x 96 ft)
INPUT MAST HEIGHT: 18.290 m (60 ft)
ABOVE MAST HEIGHT ADEQUATELY PROTECTS AGAINST STROKES ARRIVING DIRECTLY ABOVE THE SUBSTATION.
(MINIMUM NEEDED HEIGHT = 18.142 m)

EXPOSURE TO STROKES ARRIVING ON SIDES OF SUBSTATION:
POINT LOCATED AT 8.530, 0.000 IS SHIELDED, EPSI = 2.988 m

NOTE: EPSI IS THE MAX. PERMISSIBLE HORIZONTAL SEPARATION FROM THE OUTERMOST ROW OF MASTS FOR A BUS POINT AT THE SPECIFIED HEIGHT.

Exhibit B.4-8 —Output of SBSHLD for the 230 kV switchyard; case of masts

Copyright © 1996 IEEE All Rights Reserved

Copyright The Institute of Electrical and Electronics Engineers, Inc.
Provided by IHS under license with IEEE
No reproduction or networking permitted without license from IHS Not for Resale

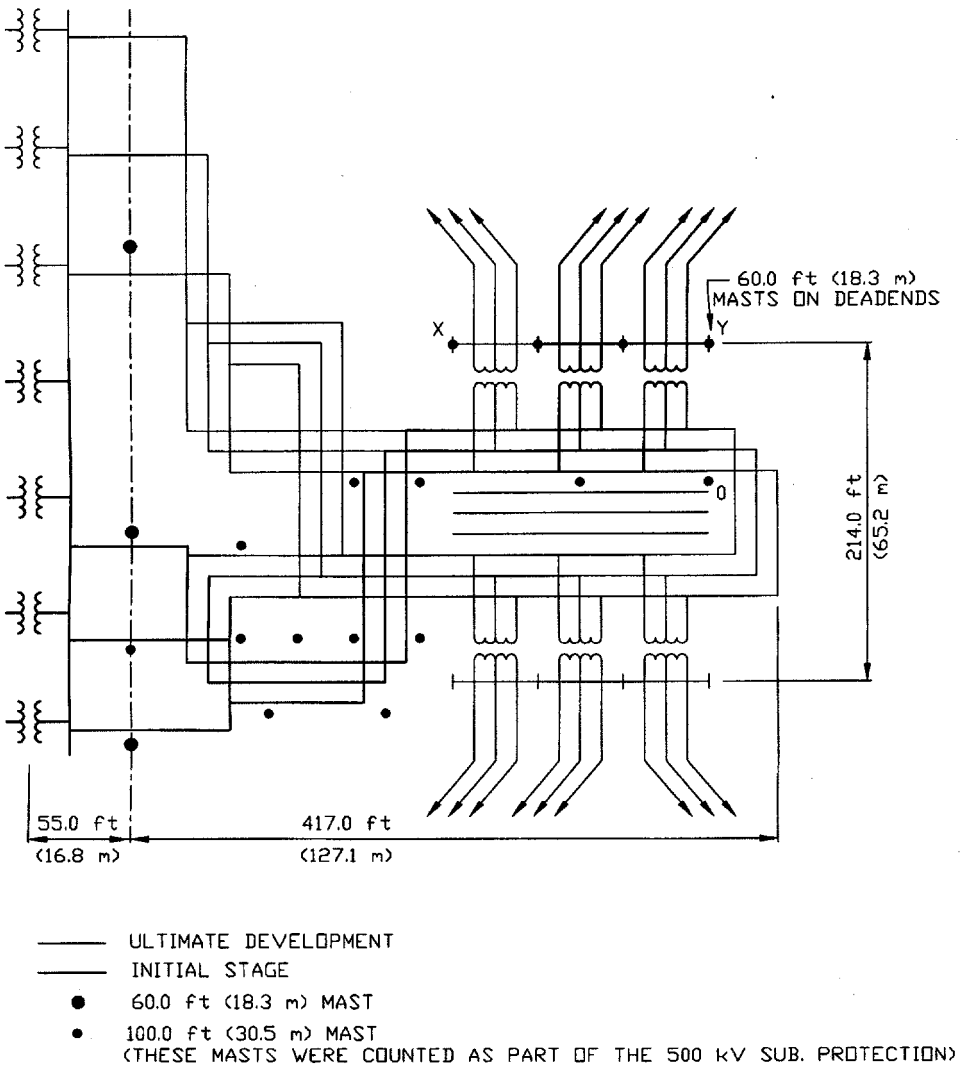

Figure B.4-7 —Shielding of the 230 kV switchyard using masts

B.5 Electrogeometric model—Rolling sphere method

B.5.1 Application design procedure for masts

Application of the electrogeometric theory by the *rolling sphere* method involves rolling an imaginary sphere of radius *S* over substation lightning terminals such as lightning masts, shield wires, and metal support structures as described in 5.3 of the guide. Therefore, to apply the method to the example substations requires the computation of the radius *S*, and this will first require the calculation of Z_s, the surge impedance, and I_s, the allowable stroke current for the various buses within the substation.

Annex C gives a method of calculating surge impedance under corona. Corona radius can be taken from figure C. 1 or calculated from Eq C.1 or C.2. The engineer who designs protection systems on a regular basis may want to write a simple PC program to perform these calculations. Once the corona radius is determined, it is an easy matter to calculate the surge impedance from Eq C.7. The surge impedance will be required for each bus of a different height and conductor type.

Copyright © 1996 IEEE All Rights Reserved

Copyright The Institute of Electrical and Electronics Engineers, Inc.
Provided by IHS under license with IEEE
No reproduction or networking permitted without license from IHS Not for Resale

Next, the designer will calculate the allowable stroke current from Eq 5-2A using the above values. The striking distance then can be calculated from Eq 5-1A. In the examples, $k = 1.2$ has been used for the mast example, and $k = 1$ has been used for the shield wire example. For a combination of masts and wires, the designer can use $k = 1$, which will give a conservative result. (Subclause 5.3.1 of this standard states that the usual practice is to assume that the striking distance to a mast, a shield wire or the ground is the same, which would infer the use of only one *k-value*. The example calculations demonstrate that a different k can be used for masts resulting in a more economical design.)

The designer is now ready to *roll* the imaginary sphere over the example substation. If the sphere remains above the equipment and busses to be protected as in figure 5-3, the design is satisfactory. If the equipment touches or enters the sphere as in figure 5-6, the equipment is not protected and the design must be revised.

The designer can determine if some areas of the station are protected by simply striking arcs on a scale drawing of the substation. Further calculation is necessary, however, to determine the maximum separation of wires and masts to prevent the sphere from sinking between them and touching the equipment to be protected. The following examples illustrate how to calculate these quantities.

B.5.2 Nomenclature used in the calculations

The nomenclature listed below are used in the following calculations:

For calculations when using masts:

S	Sphere radius
H	Mast height (calculations use an assumed height; designer should pick a mast height suitable for the design)
A	Bus height
W & C	Horizontal distance from origin of sphere (OOS) to bus
T	Maximum separation from mast to bus for protection
Y	Minimum phase to steel clearance
Z	Horizontal distance between OOS and line drawn between two masts
L	Half the separation between two masts
X	Maximum separation between two masts
D	Elevation difference between mast and bus
E	Elevation difference between mast and OOS
J	Horizontal distance between OOS and mast
K	Diagonal distance between masts when four masts support the sphere
P	Distance between masts when four masts support the sphere
Q	Distance between masts when three masts support the sphere

For calculations using shield wires:

S	Sphere radius
H	Wire height (calculations use assumed heights; designer should pick mast height suitable for his/her design)
A	Bus height
L	Half the separation between two wires
X	Maximum separation between two wires
D	Elevation difference between wire and bus
E	Elevation difference between wire and OOS
R	Horizontal distance between OOS and wire
T	Horizontal distance between OOS and bus
C	Horizontal distance between shield wire and bus

--`,,`-`-`,,`,,`,`,,`---
Copyright © 1996 IEEE All Rights Reserved

Copyright The Institute of Electrical and Electronics Engineers, Inc.
Provided by IHS under license with IEEE
No reproduction or networking permitted without license from IHS
Not for Resale

B.5.3 The 69 kV switchyard—Mast option

A design using lightning masts for protection will be considered first. The procedure for masts is as follows:

a) Calculate the surge impedance, Z_s (see annex C).
b) Calculate the critical stroke current, I_s from Eq 5-2A.
c) Calculate the striking distance, S (which will become the sphere radius) from Eq 5-1B.
d) Calculate T as shown by the calculations that follow. T is the maximum horizontal distance from the mast that an object at a height, A, is protected from a direct stroke. A circle with radius, T, is the area of protection afforded by a single mast for an object at height, A.
e) Calculate X, the maximum separation of two masts to prevent a side stroke. (It may help to visualize a sphere resting on the ground that is then rolled over to just touch the two masts. The bus is arranged so that it also just touches the surface of the sphere. By studying the various views of the figure, it can be seen that this determines the maximum separation to prevent side strokes.)
f) Calculate P, the maximum separation of masts to prevent a vertical stroke.
g) Calculate Q, the maximum separation of three masts to prevent a vertical stroke.
h) With this information masts can be spotted in the substation; arcs can be drawn around them and adjustments can be made for an optimal layout.

The resulting layout is found in figure B.5-1.

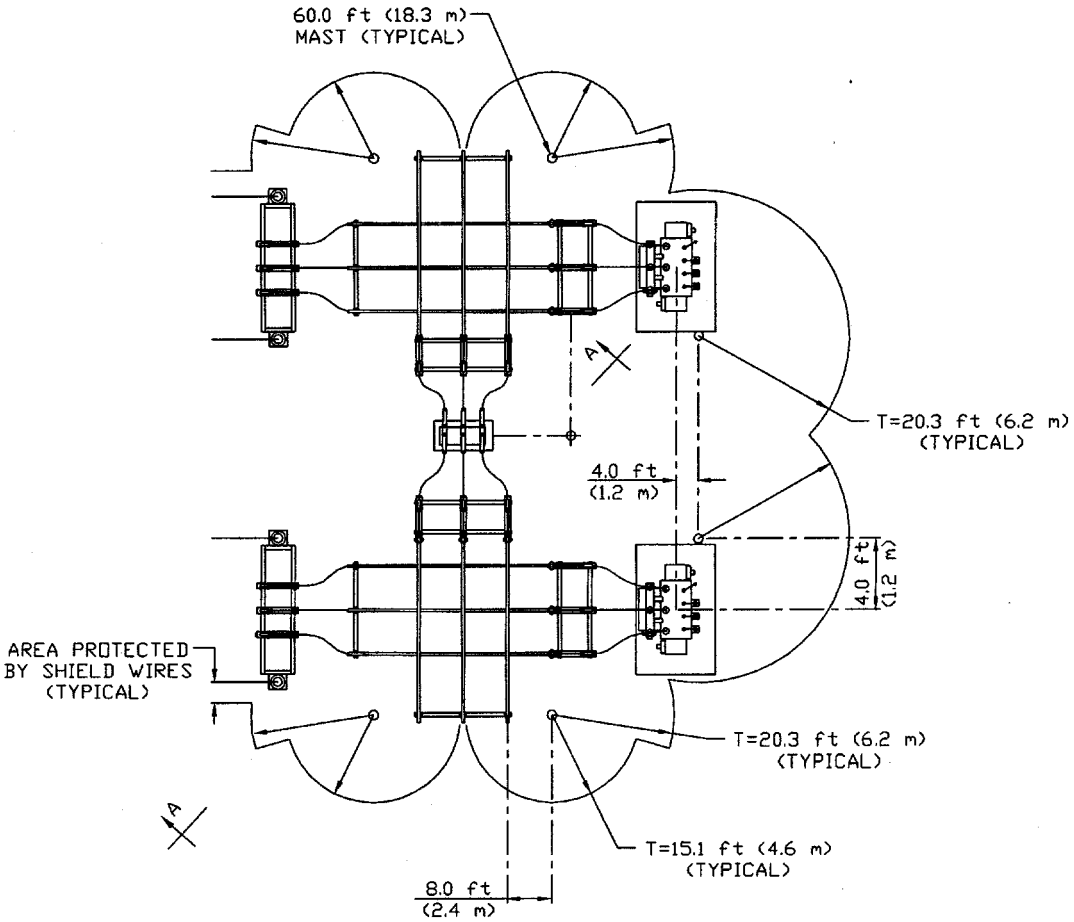

Figure B.5-1 —Mast protection for 69 kV substation

Copyright © 1996 IEEE All Rights Reserved

Copyright The Institute of Electrical and Electronics Engineers, Inc.
Provided by IHS under license with IEEE
No reproduction or networking permitted without license from IHS
Not for Resale

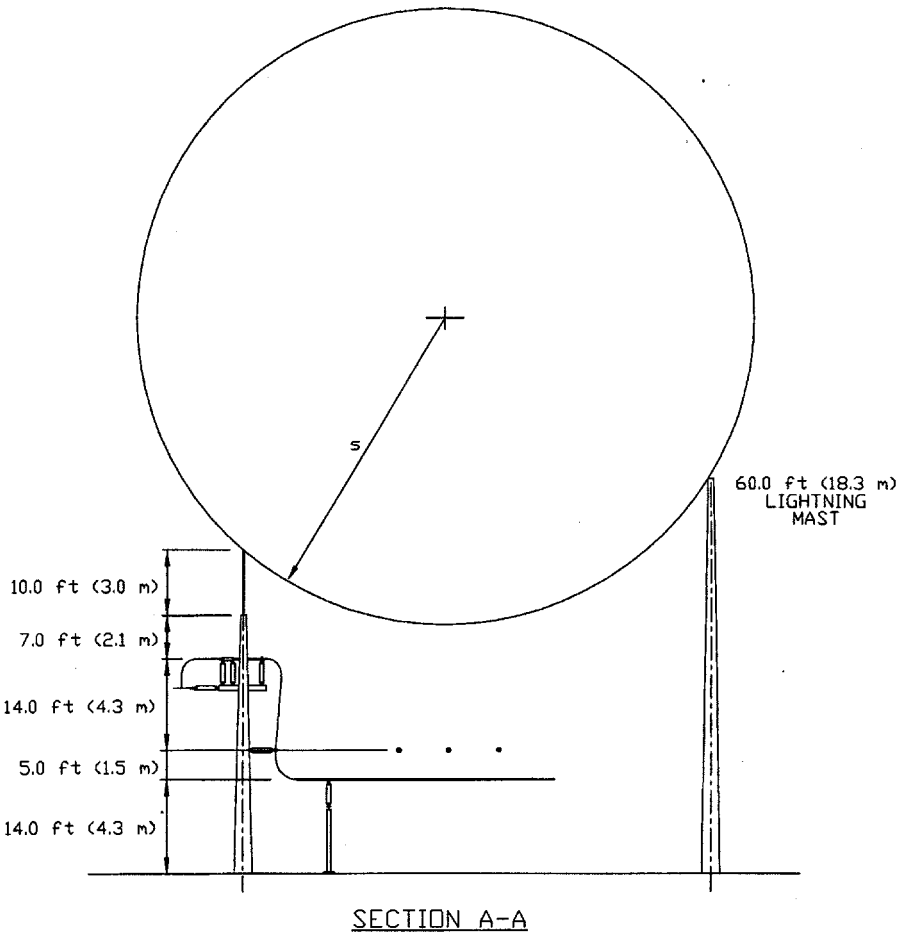

Figure B.5-1 —Mast protection for 69 kV substation (*Continued*)

Copyright © 1996 IEEE All Rights Reserved

Copyright The Institute of Electrical and Electronics Engineers, Inc.
Provided by IHS under license with IEEE
No reproduction or networking permitted without license from IHS
Not for Resale

69 kV substation example—Protection by mast

$Z_s = 300\ \Omega$ BIL = 350 kV

$$I_s = 2.2 \cdot \frac{\text{BIL}}{Z_s}$$ Eq 5-2A

$I_S = 2.567$ kA

$k = 1.2$

$S = 26.25 \cdot k \cdot I_S^{0.65}$ Eq 5-1B

$S = 58.13$ ft

$H = 60$ assumed mast height in feet

$A_1 = 19$ $A_2 = 14$ height of 69 kV buses in feet

$C_1 = \sqrt{S^2 - (S - A_1)^2}$ $C_2 = \sqrt{S^2 - (S - A_2)^2}$

$C_1 = 42.988$ ft $C_2 = 37.837$ ft

Also $C = S - T$

$T_1 = S - C_1$ $T_2 = S - C_2$

$T_1 = 15.142$ ft $T_2 = 20.293$ ft

These values are the maximum separation between the mast and protected bus for the two bus heights A.

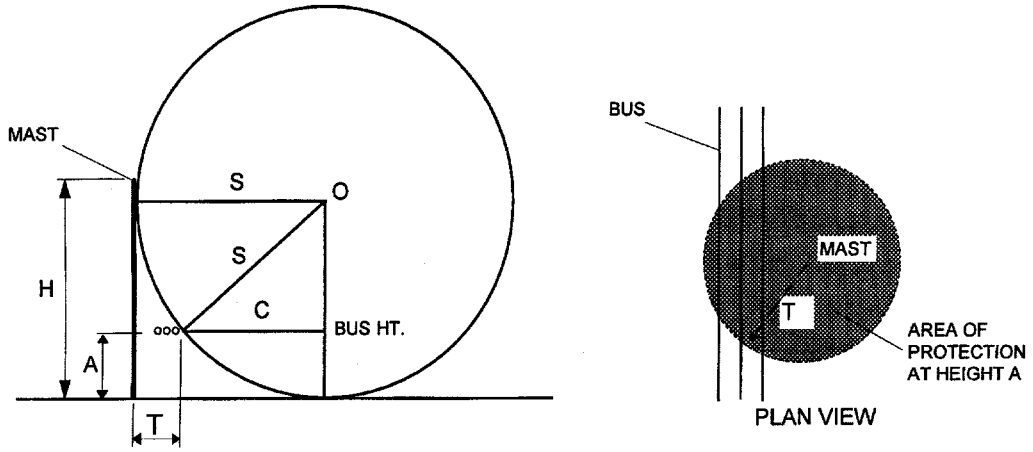

Exhibit B.5-1 —Calculations for mast protection of 69 kV substation

Copyright © 1996 IEEE All Rights Reserved

Copyright The Institute of Electrical and Electronics Engineers, Inc.
Provided by IHS under license with IEEE
No reproduction or networking permitted without license from IHS
Not for Resale

Maximum distance between two masts for side stroke

$W_1 = \sqrt{S^2 - (S - A_1)^2}$ $W_2 = \sqrt{S^2 - (S - A_2)^2}$

$W_1 = 42.988$ ft $W_2 = 37.837$ ft

$Y = 3$ ft

$Z_1 = W_1 - Y$ $Z_2 = W_2 - Y$

$Z_1 = 39.988$ ft $Z_2 = 34.837$ ft

$L_1 = \sqrt{S^2 - Z_1^2}$ $L_2 = \sqrt{S^2 - Z_2^2}$

$L_1 = 42.191$ ft $L_2 = 46.535$ ft

$X_1 = 2\,L_1$ $X_2 = 2\,L_2$

$X_1 = 84.382$ ft $X_2 = 93.07$ ft

These values are the maximum separation of two masts for protection of buses at the two heights A.

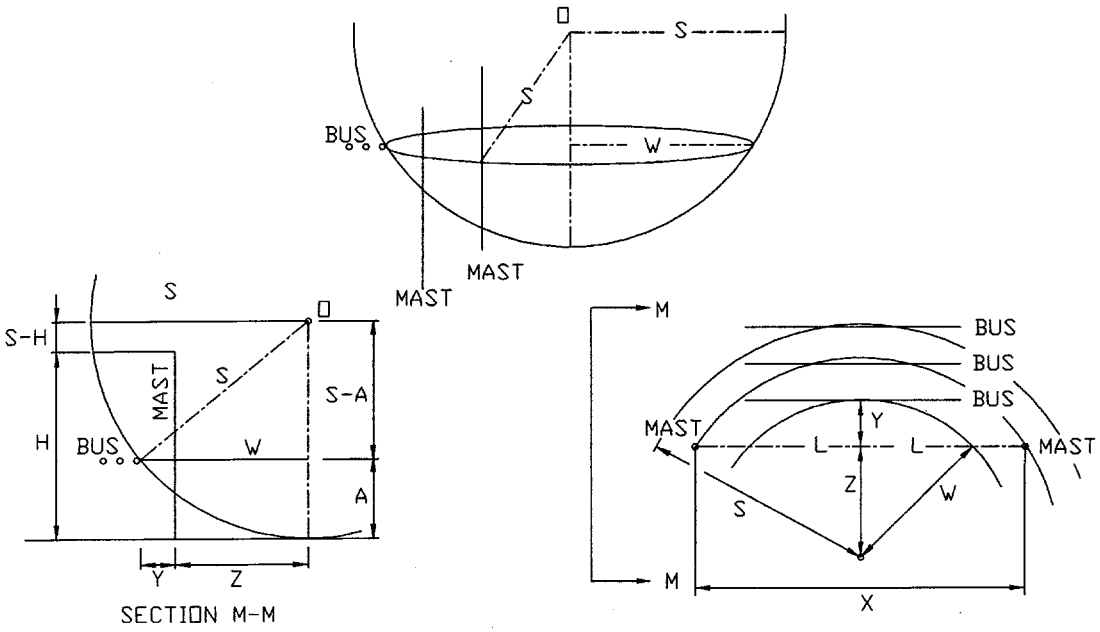

Exhibit B.5-1 —Calculations for mast protection of 69 kV substation (*Continued*)

Copyright © 1996 IEEE All Rights Reserved

Copyright The Institute of Electrical and Electronics Engineers, Inc.
Provided by IHS under license with IEEE
No reproduction or networking permitted without license from IHS
Not for Resale

Maximum distance between masts for vertical stroke sphere supported by four masts

D must be less than or equal to $H - A$ for protection at height A

$D_1 = H - A_1$ $D_2 = H - A_2$

$D_1 = 41$ ft $D_2 = 46$ ft

$E_1 = S - D_1$ $E_2 = S - D_2$

$E_1 = 17.13$ ft $E_2 = 12.13$ ft

$J_1 = \sqrt{S^2 - E_1^2}$ $J_2 = \sqrt{S^2 - E_2^2}$

$J_1 = 55.549$ ft $J_2 = 56.85$ ft

$K_1 = 2J_1$ $K_2 = 2J_2$

$K_1 = 111.098$ ft $K_2 = 113.701$ ft

$P_1 = \frac{K_1}{\sqrt{2}}$ $P_2 = \frac{K_2}{\sqrt{2}}$

$P_1 = 78.558$ ft $P_2 = 80.399$ ft

These values are the maximum spacing of four masts for protection of buses at the two heights A.

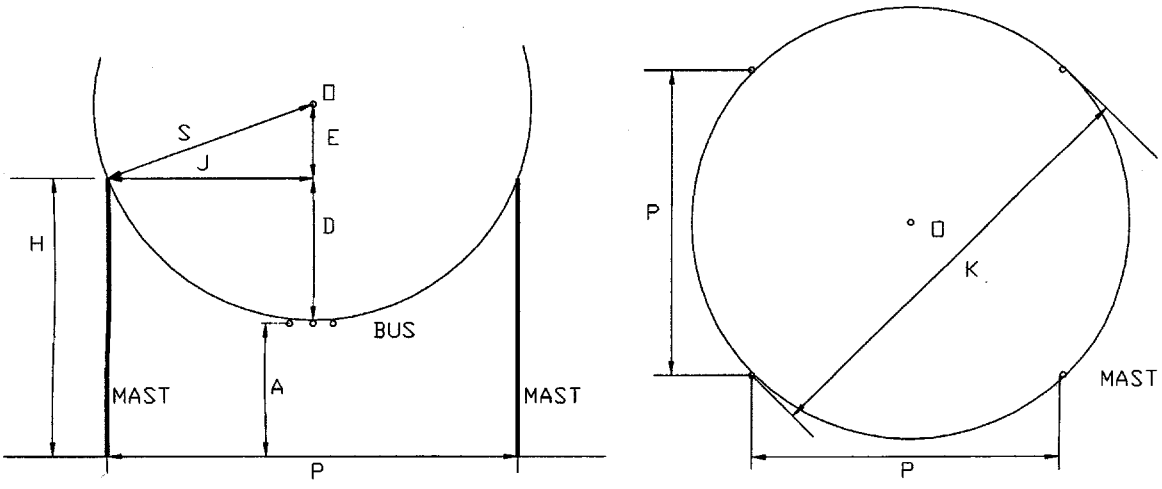

Exhibit B.5-1 —Calculations for mast protection of 69 kV substation (*Continued*)

Copyright © 1996 IEEE All Rights Reserved

Copyright The Institute of Electrical and Electronics Engineers, Inc.
Provided by IHS under license with IEEE
No reproduction or networking permitted without license from IHS
Not for Resale

Maximum distance between masts for vertical stroke sphere supported by three masts

$$Q_1 = 2 \cdot \cos\left(\pi \cdot \frac{30}{180}\right) \cdot J_1 \qquad Q_2 = 2 \cdot \cos\left(\pi \cdot \frac{30}{180}\right) \cdot J_2 \cdot$$

$Q_1 = 96.213$ ft $\qquad Q_2 = 98.468$ ft

These values are the maximum spacing of three masts for protection of buses at the two heights *A*.

However, *Q* shall not be greater than *X* (the maximum separation of two masts).

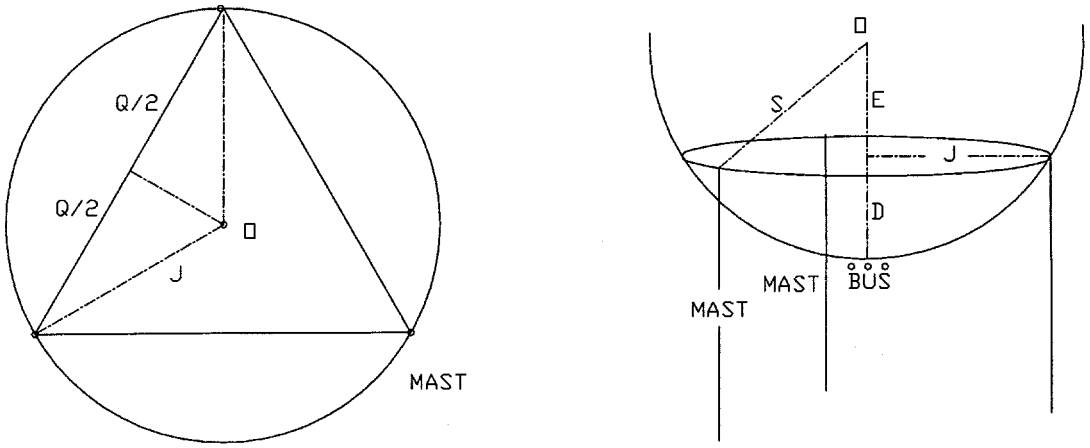

Exhibit B.5-1 —Calculations for mast protection of 69 kV substation (*Continued*)

B.5.4 The 69 kV switchyard—Shield wire option

The procedure for designing a shield wire system follows a similar routine. For parallel wires, only two calculations are required; the horizontal distance, C, to prevent side strokes and the distance, *X*, the maximum separation to prevent vertical strokes.

The calculation results are shown in Exhibit B.5-2. The 14 ft bus (or the transformer that is at the same height) may extend 13 ft beyond the shield wire and still be protected from side stroke. Since the transformer does not extend beyond the shield wire, it is protected. The high bus may extend 9 ft beyond the shield wire and be protected. Since it extends only 6 ft beyond, it is protected.

Calculations are also included for a. 60 ft shield wire height. Notice that the values for *C* are slightly less than for a 40 ft wire height. This illustrates that a 60 ft wire height would give less protection from side stroke. A study of Section "B-B" of figure B.5-2 will show why this is true.

The calculations for maximum shield wire separation for the 14 ft bus yield a value of 86 ft. Since the actual separation is 84 ft, the bus is protected. A maximum separation of 80 ft is permitted for the 19 ft bus and it is protected since the separation is 79 ft This set of shield wires actually protects the low bus as well and the other set is needed only for side stroke protection. The incoming line conductors are fully shielded by the existing shield wires. This completes the protection of the substation.

The resulting layout is found in figure B.5-2.

Copyright © 1996 IEEE All Rights Reserved

Copyright The Institute of Electrical and Electronics Engineers, Inc.
Provided by IHS under license with IEEE
No reproduction or networking permitted without license from IHS Not for Resale

69 kV substation example—Protection by shield wire (60 ft ht.)

$Z_S = 300\ \Omega$ BIL = 350 kV

$$I_s = 2.2 \cdot \frac{\text{BIL}}{Z_s} \qquad \text{(ref Eq 5-2A)}$$

$I_S = 2.567$ kA

$k = 1.0$

$S = 26.25 \cdot k \cdot I_S^{0.65}$ (ref Eq 5-1B)

$S = 48.442$ ft

$H = 60$ assumed wire height in feet

$A_1 = 19$ $A_2 = 14$ height of 69 kV buses in feet

$R = \sqrt{S^2 - (S-H)^2}$ $R = 47.043$ ft

$T_1 = \sqrt{S^2 - (S-A_1)^2}$ $T_2 = \sqrt{S^2 - (S-A_2)^2}$

$T_1 = 38.468$ ft $T_2 = 34.064$ ft

$C_1 = R - T_1$ $C_2 = R - T_2$

$C_1 = 8.575$ ft $C_2 = 12.978$ ft

These values are the maximum horizontal separation of shield wire and bus for protection at bus height A.

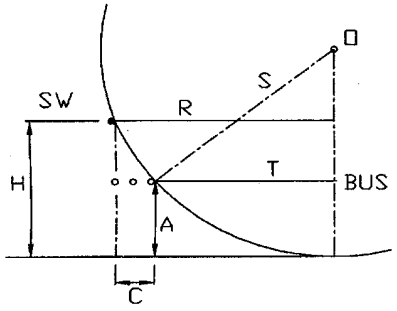

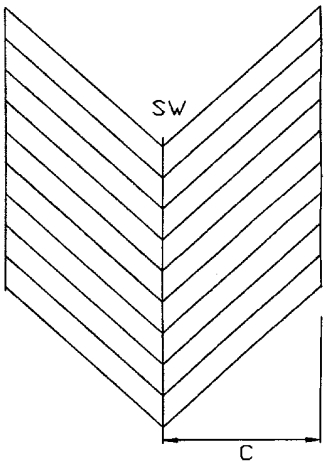

Exhibit B.5-2 —Calculations for shield wire protection of 69 kV substation

Copyright © 1996 IEEE All Rights Reserved

Copyright The Institute of Electrical and Electronics Engineers, Inc.
Provided by IHS under license with IEEE
No reproduction or networking permitted without license from IHS
Not for Resale

Maximum distance between two wires for vertical stroke (D must be less than or equal to $H - A$ for protection at height A)

$D_1 = H - A_1$ $D_2 = H - A_2$

$D_1 = 41$ ft $D_2 = 46$ ft

$E_1 = S - D_1$ $E_2 = S - D_2$

$E_1 = 7.442$ ft $E_2 = 2.442$ ft

$L_1 = \sqrt{S^2 - E_1^2}$ $L_2 = \sqrt{S^2 - E_2^2}$

$L_1 = 47.867$ ft $L_2 = 48.38$ ft

$X_1 = 2L_1$ $X_2 = 2L_2$

$X_1 = 95.733$ ft $X_2 = 96.76$ ft

These values are the maximum separation of shield wires for protection at bus at height A.

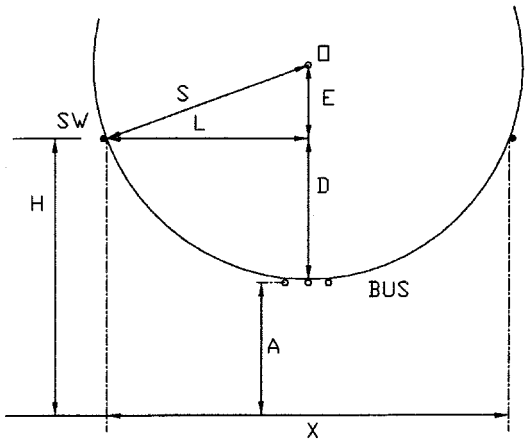

Exhibit B.5-2 —Calculations for shield wire protection of 69 kV substation (*Continued*)

Copyright © 1996 IEEE All Rights Reserved

Copyright The Institute of Electrical and Electronics Engineers, Inc.
Provided by IHS under license with IEEE
No reproduction or networking permitted without license from IHS
Not for Resale

69 kV substation example—Protection by shield wires (40 ft ht.)

$Z_S = 300\ \Omega$ BIL = 350 kV

$$I_s = 2.2 \cdot \frac{\text{BIL}}{Z_s}$$ (ref Eq 5-2A)

$I_S = 2.567$ kA

$k = 1.0$

$S = 26.25 \cdot k \cdot I_s^{0.65}$ (ref Eq 5-1B)

$S = 48.442$ ft

$H = 40$ assumed wire height in feet

$A_1 = 19$ $A_2 = 14$ height of 69 kV buses in feet

$R = \sqrt{S^2 - (S-H)^2}$ $R = 47.7$ ft

$T_1 = \sqrt{S^2 - (S-A_1)^2}$ $T_2 = \sqrt{S^2 - (S-A_2)^2}$

$T_1 = 38.468$ ft $T_2 = 34.064$ ft

$C_1 = R - T_1$ $C_2 = R - T_2$

$C_1 = 9.233$ ft $C_2 = 13.636$ ft

These values are the maximum horizontal separation of shield wire and bus for protection at bus height A.

Maximum distance between two wires for vertical stroke (D must be less than or equal to $H - A$ for protection at height A)

$D_1 = H - A_1$ $D_2 = H - A_2$

$D_1 = 21$ ft $D_2 = 26$ ft

$E_1 = S - D_1$ $E_2 = \text{S} - D_2$

$E_1 = 27.442$ ft $E_2 = 22.442$ ft

$L_1 = \sqrt{S^2 - E_1^2}$ $L_2 = \sqrt{S^2 - E_2^2}$

$L_1 = 39.919$ ft $L_2 = 42.93$ ft

$X_1 = 2L_1$ $X_2 = 2L_2$

$X_1 = 79.839$ ft $X_2 = 85.86$ ft

These values are the maximum separation of shield wires for protection at bus height A.

Exhibit B.5-2 —Calculations for shield wire protection of 69 kV substation (*Continued*)

Copyright © 1996 IEEE All Rights Reserved

Copyright The Institute of Electrical and Electronics Engineers, Inc.
Provided by IHS under license with IEEE
No reproduction or networking permitted without license from IHS
Not for Resale

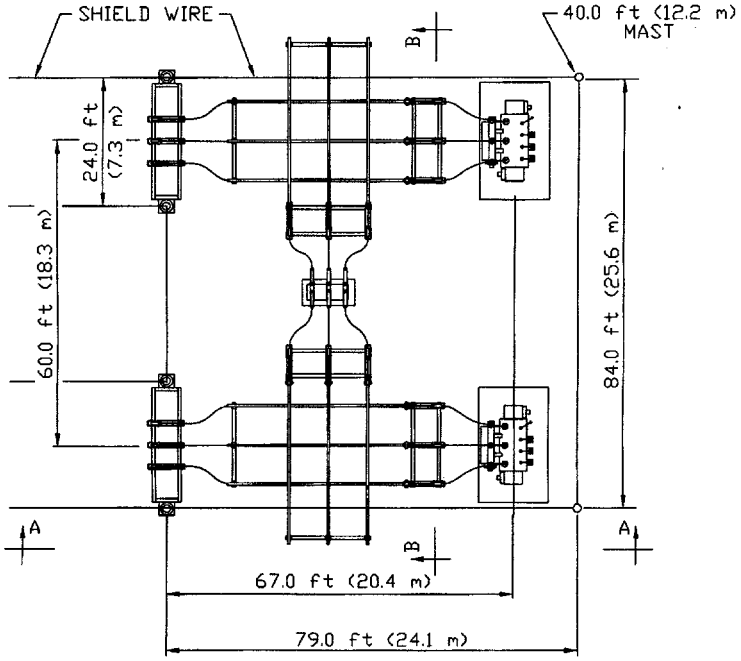

Figure B.5-2 —Shield wire protection for 69 kV substation

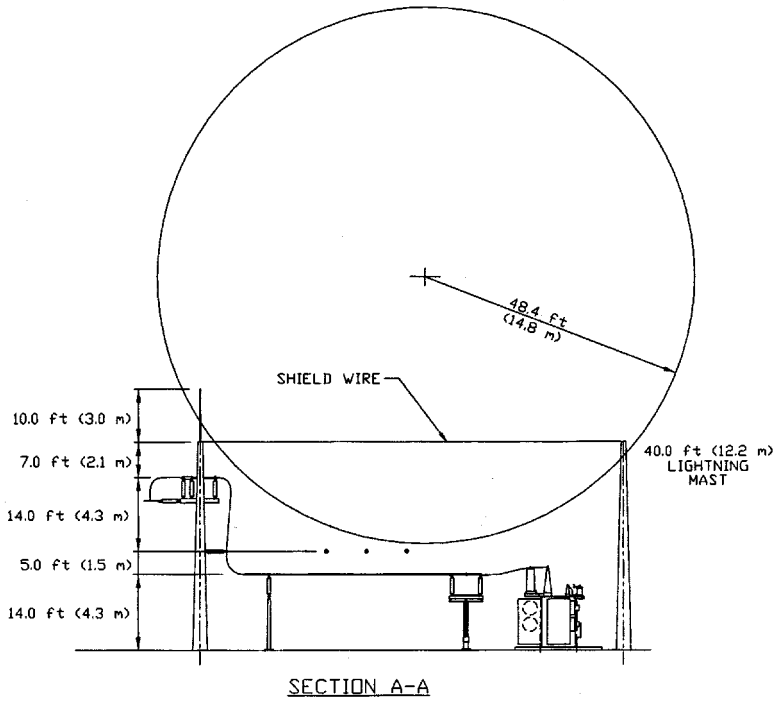

Figure B.5-2 —Shield wire protection for 69 kV substation (*Continued*)

Copyright © 1996 IEEE All Rights Reserved

Copyright The Institute of Electrical and Electronics Engineers, Inc.
Provided by IHS under license with IEEE
No reproduction or networking permitted without license from IHS
Not for Resale

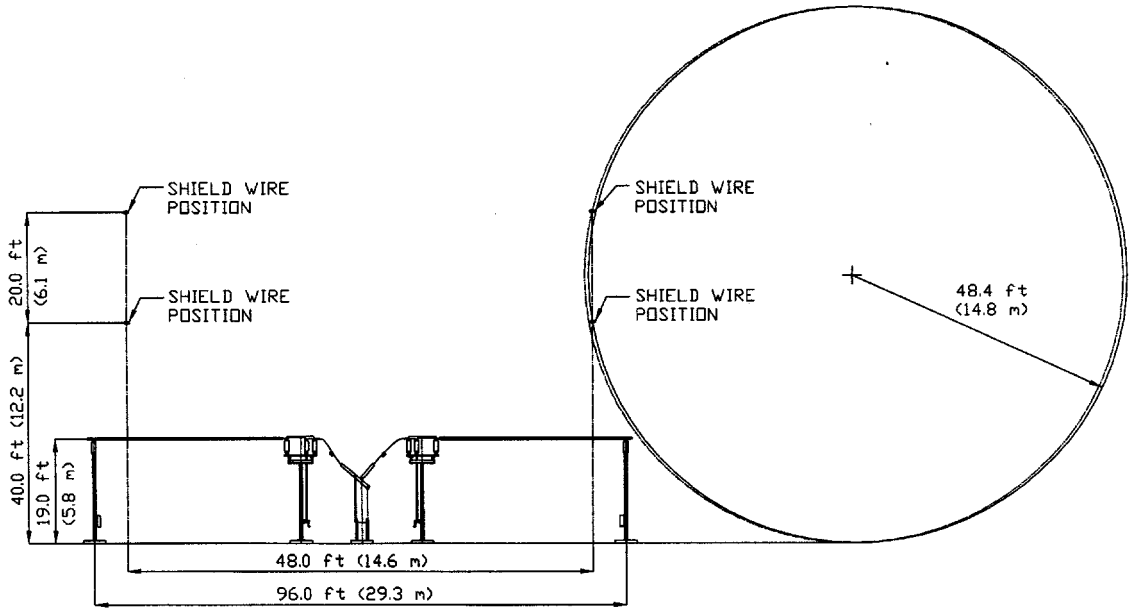

Figure B.5-2 —Shield wire protection for 69 kV substation (*Continued*)

B.5.5 The 500/230 kV switchyard—Dealing with multiple voltages

The procedure of applying the rolling sphere method when there are multiple voltages in a substation is quite simple, as illustrated by the Mcintosh substation. The designer simply makes a separate calculation for each voltage level in the station using the appropriate BIL and surge impedance. At the voltage interface (usually the transformer) the designer should ensure that the lower voltage equipment is protected by using the appropriate lower striking distance. If low voltage busses are present, it may be appropriate to use a minimum stoke current of 2 kA for the design calculations in these areas (see 5.3.6).

The procedure for the 500 kV portion of the switchyard and for the 230 kV portion taken separately follow the same routine as has been previously discussed for the 69 kV example. Calculations for mast placement in the 500 kV portion of the station are found in Exhibit B.5-3 and calculations for the 230 kV portion are found in Exhibit B.5-4. The resulting layout is shown in figure B.5-3(b). Likewise, calculations for shield wires are found in Exhibits B.5-5 and B.5-6 and the resulting layout is shown in figure B.5-4.

Copyright © 1996 IEEE All Rights Reserved

Copyright The Institute of Electrical and Electronics Engineers, Inc.
Provided by IHS under license with IEEE
No reproduction or networking permitted without license from IHS
Not for Resale

500 kV substation example—Protection by masts

$Z_S = 336\ \Omega$ BIL = 1800 kV

$$I_s = 2.2 \cdot \frac{\text{BIL}}{Z_s}$$ (ref Eq 5-2A)

$I_S = 11.786$ kA

$k = 1.2$

$S = 26.25 \cdot k \cdot I_S^{0.65}$ $S = 156.564$ (ref Eq 5-1B)

$A_1 = 55$ $A_2 = 30$ height of 500 kV buses in feet

$H = 100$ assumed mast height in feet

$C_1 = \sqrt{S^2 - (S - A_1)^2}$ $C_2 = \sqrt{S^2 - (S - A_2)^2}$

$C_1 = 119.151$ ft $C_2 = 92.162$ ft

$R = \sqrt{S^2 - (S - H)^2}$ $R = 145.989$ ft

$T = R - C$

$T_1 = R - C_1$ $T_2 = R - C_2$

$T_1 = 26.838$ ft $T_2 = 53.827$ ft

These values are the maximum separation between the mast and protected bus for the two bus heights A.

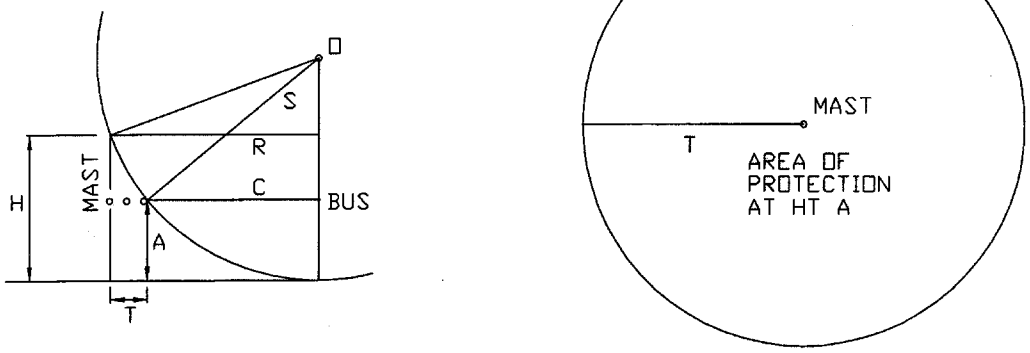

Exhibit B.5-3 —Calculations for mast protection of 500 kV substation

Copyright © 1996 IEEE All Rights Reserved

Copyright The Institute of Electrical and Electronics Engineers, Inc.
Provided by IHS under license with IEEE
No reproduction or networking permitted without license from IHS
Not for Resale

Maximum distance between two masts for side stroke

$W_1 = \sqrt{S^2 - (S - A_1)^2}$ $W_2 = \sqrt{S^2 - (S - A_2)^2}$

$W_1 = 119.151$ ft $W_2 = 92.162$ ft

$Y = 5 + \frac{11}{12}$ $Y = 5.917$ ft

$Z_1 = W_1 - Y$ $Z_2 = W_2 - Y$

$Z_1 = 113.235$ ft $Z_2 = 86.245$ ft

$L_1 = \sqrt{R^2 - Z_1^2}$ $L_2 = \sqrt{R^2 - Z_2^2}$

$L_1 = 92.145$ ft $L_2 = 117.79$ ft

$X_1 = 2L_1$ $X_2 = 2L_2$

$X_1 = 184.29$ ft $X_2 = 235.58$ ft

These values are the maximum separation of two masts for protection of buses at the two bus heights A.

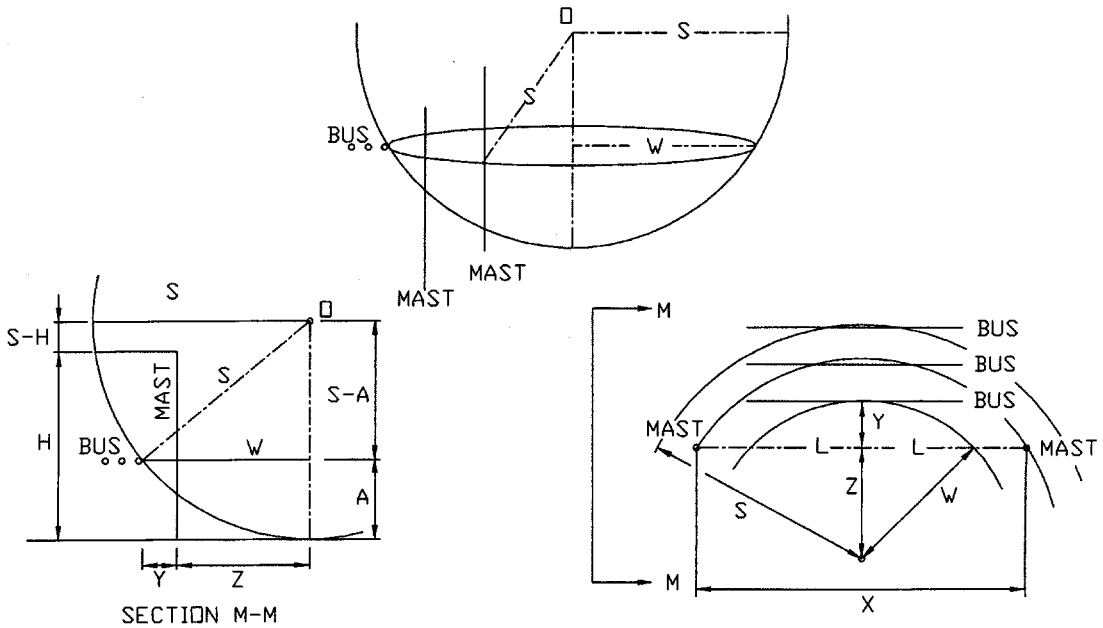

Exhibit B.5-3 —Calculations for mast protection of 500 kV substation *(Continued)*

Copyright © 1996 IEEE All Rights Reserved

Copyright The Institute of Electrical and Electronics Engineers, Inc.
Provided by IHS under license with IEEE
No reproduction or networking permitted without license from IHS
Not for Resale

Maximum distance between two masts for vertical stroke sphere supported by four masts

D must be less than or equal to $H - A$ for protection at height A.

$D_1 = H - A_1$ $D_2 = H - A_2$

$D_1 = 45$ ft $D_2 = 70$ ft

$E_1 = S - D_1$ $E_2 = S - D_2$

$E_1 = 111.564$ ft $E_2 = 86.564$ ft

$J_1 = \sqrt{S^2 - E_1^2}$ $J_2 = \sqrt{S^2 - E_2^2}$

$J_1 = 109.844$ ft $J_2 = 130.457$ ft

$K_1 = 2J_1$ $K_2 = 2J_2$

$K_1 = 219.689$ ft $K_2 = 260.913$ ft

$P_1 = \frac{K_1}{\sqrt{2}}$ $P_2 = \frac{K_2}{\sqrt{2}}$

$P_1 = 155.343$ ft $P_2 = 184.494$ ft

These values are the maximum spacing of four masts for protection of buses at the two bus heights A.

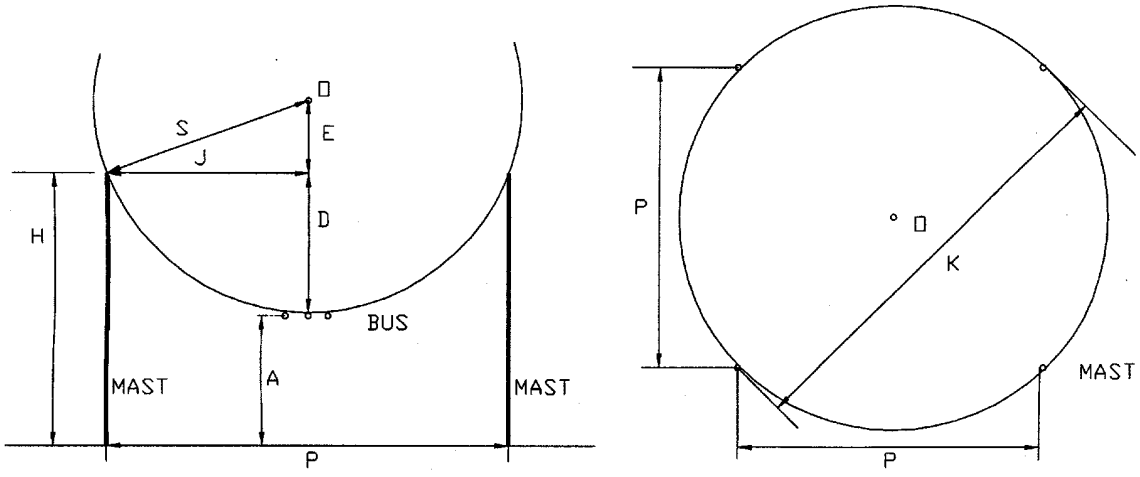

Exhibit B.5-3 —Calculations for mast protection of 500 kV substation (*Continued*)

Copyright © 1996 IEEE All Rights Reserved

Copyright The Institute of Electrical and Electronics Engineers, Inc.
Provided by IHS under license with IEEE
No reproduction or networking permitted without license from IHS
Not for Resale

Maximum distance between two masts for vertical stroke sphere supported by three masts

$$Q_1 = 2 \cdot \cos\left(\pi \cdot \frac{30}{180}\right) \cdot J_1 \qquad Q_2 = 2 \cdot \cos\left(\pi \cdot \frac{30}{180}\right) \cdot J_2$$

$Q_1 = 190.256$ ft $Q_2 = 225.958$ ft

These values are the maximum spacing of three masts for protection at the two bus heights A.

However, Q shall not be greater than X.

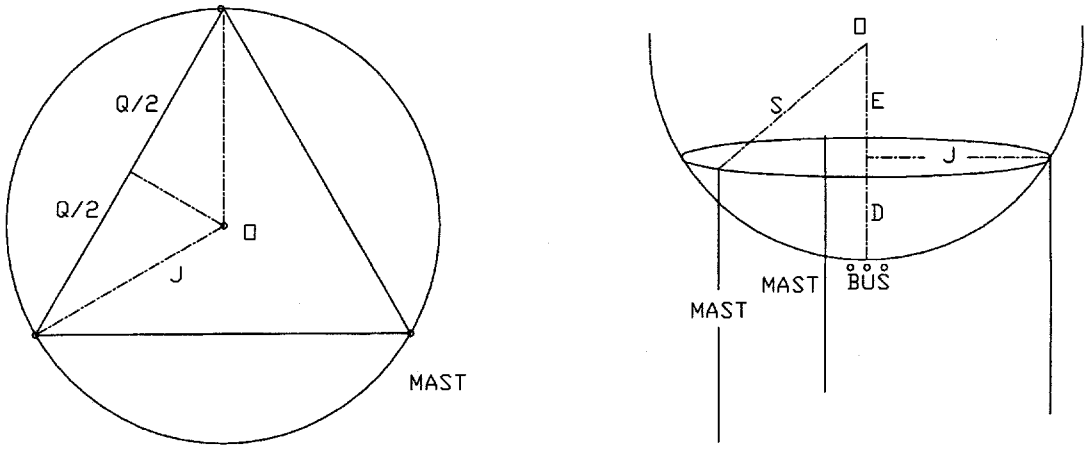

Exhibit B.5-3 —Calculations for mast protection of 500 kV substation (*Continued*)

Copyright © 1996 IEEE All Rights Reserved

Copyright The Institute of Electrical and Electronics Engineers, Inc.
Provided by IHS under license with IEEE
No reproduction or networking permitted without license from IHS
Not for Resale

230 kV Substation example—Protection by masts

$Z_S = 336\ \Omega$ BIL = 900 kV

$$I_s = 2.2 \cdot \frac{\text{BIL}}{Z_s}$$ (ref Eq 5-2A)

$I_S = 5.893$ kA

$k = 1.2$

$S = 26.25 \cdot k \cdot I_S^{0.65}$ (ref Eq 5-1B)

$S = 99.775$ ft

$H = 100$ assumed wire height in feet

$A_1 = 28$ $A_2 = 20$ $A_3 = 39$ height of 230 kV buses in feet

$C_1 = \sqrt{S^2 - (S - A_1)^2}$ $C_2 = \sqrt{S^2 - (S - A_2)^2}$ $C_3 = \sqrt{S^2 - (S - A_3)^2}$

$C_1 = 69.307$ ft $C_2 = 59.925$ ft $C_3 = 79.129$ ft

also $C = S - T$

$T_1 = S - C_1$ $T_2 = S - C_2$ $T_3 = S - C_3$

$T_1 = 30.469$ ft $T_2 = 39.85$ ft $T_3 = 20.646$

These values are the maximum separation between the mast and protected bus for the three bus heights A.

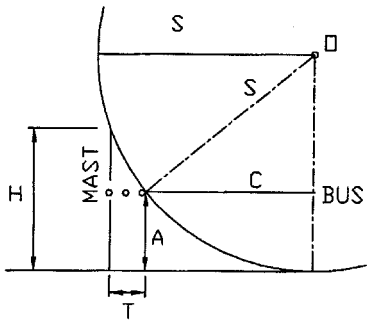

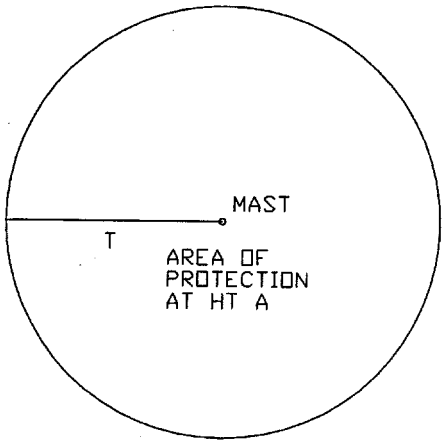

Exhibit B.5-4 —Calculations for mast protection of 230 kV substation

Copyright © 1996 IEEE All Rights Reserved

Copyright The Institute of Electrical and Electronics Engineers, Inc.
Provided by IHS under license with IEEE
No reproduction or networking permitted without license from IHS Not for Resale

Maximum distance between two masts for side stroke

$W_1 = \sqrt{S^2 - (S - A_1)^2}$ $W_2 = \sqrt{S^2 - (S - A_2)^2}$ $W_3 = \sqrt{S^2 - (S - A_3)^2}$

$W_1 = 69.307$ ft $W_2 = 59.925$ ft $W_3 = 79.129$ ft

$Y = 5 + \frac{11}{12}$ $Y = 5.917$ ft

$Z_1 = W_1 - Y$ $Z_2 = W_2 - Y$ $Z_3 = W_3 - Y$

$Z_1 = 63.39$ ft $Z_2 = 54.008$ ft $Z_3 = 73.213$ ft

$L_1 = \sqrt{S^2 - Z_1^2}$ $L_2 = \sqrt{S^2 - Z_2^2}$ $L_3 = \sqrt{S^2 - Z_3^2}$

$L_1 = 77.051$ ft $L_2 = 83.894$ ft $L_3 = 67.786$ ft

$X_1 = 2L_1$ $X_2 = 2L_2$ $X_3 = 2L_3$

$X_1 = 154.101$ ft $X_2 = 167.788$ ft $X_3 = 135.573$ ft

These values are the maximum separation of two masts for protection of buses at the three heights A.

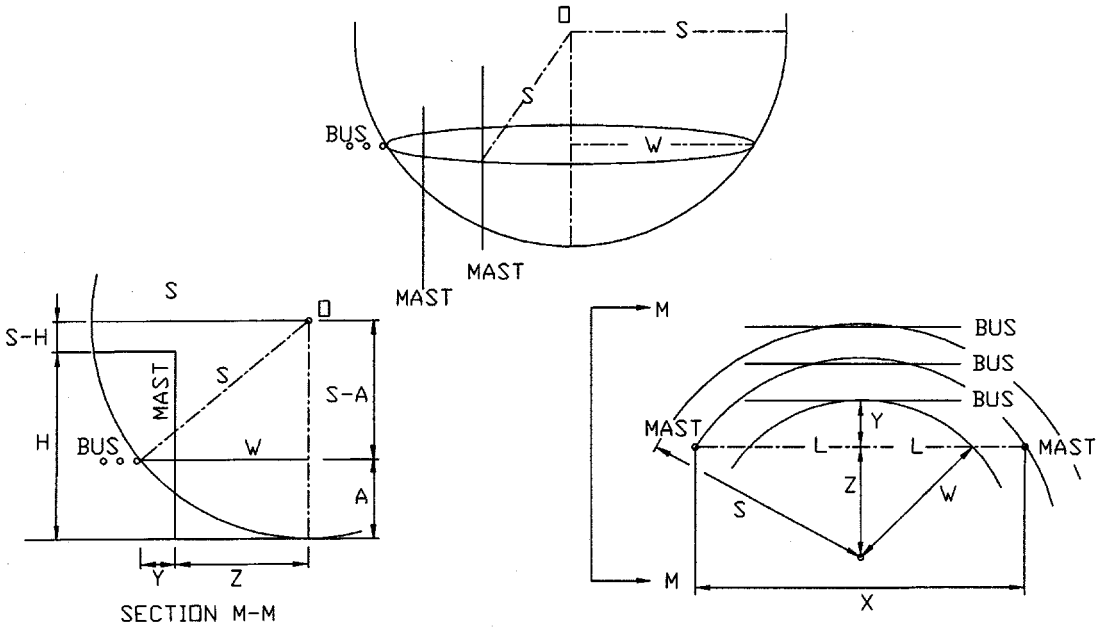

Exhibit B.5-4 —Calculations for mast protection of 230 kV substation (*Continued*)

Copyright © 1996 IEEE All Rights Reserved

Copyright The Institute of Electrical and Electronics Engineers, Inc.
Provided by IHS under license with IEEE
No reproduction or networking permitted without license from IHS
Not for Resale

Maximum distance between masts for vertical stroke sphere supported by four masts

D must be less than or equal to $H - A$ for protection at height A

$D_1 = H - A_1$	$D_2 = H - A_2$	$D_3 = H - A_3$
$D_1 = 72$ ft	$D_2 = 80$ ft	$D_3 = 61$ ft
$E_1 = S - D_1$	$E_2 = S - D_2$	$E_3 = S - D_3$
$E_1 = 27.775$ ft	$E_2 = 19.775$ ft	$E_3 = 38.775$ ft
$J_1 = \sqrt{S^2 - E_1^2}$	$J_2 = \sqrt{S^2 - E_2^2}$	$J_3 = \sqrt{S^2 - E_3^2}$
$J_1 = 95.831$ ft	$J_2 = 97.796$ ft	$J_3 = 91.932$ ft
$K_1 = 2J_1$	$K_2 = 2J_2$	$K_3 = 2J_3$
$K_1 = 191.662$ ft	$K_2 = 195.592$ ft	$K_3 = 183.865$ ft
$P_1 = \frac{K_1}{\sqrt{2}}$	$P_2 = \frac{K_2}{\sqrt{2}}$	$P_3 = \frac{K_3}{\sqrt{2}}$
$P_1 = 135.526$ ft	$P_2 = 138.304$ ft	$P_3 = 130.012$ ft

These values are the maximum spacing of four masts for protection at the three bus heights A.

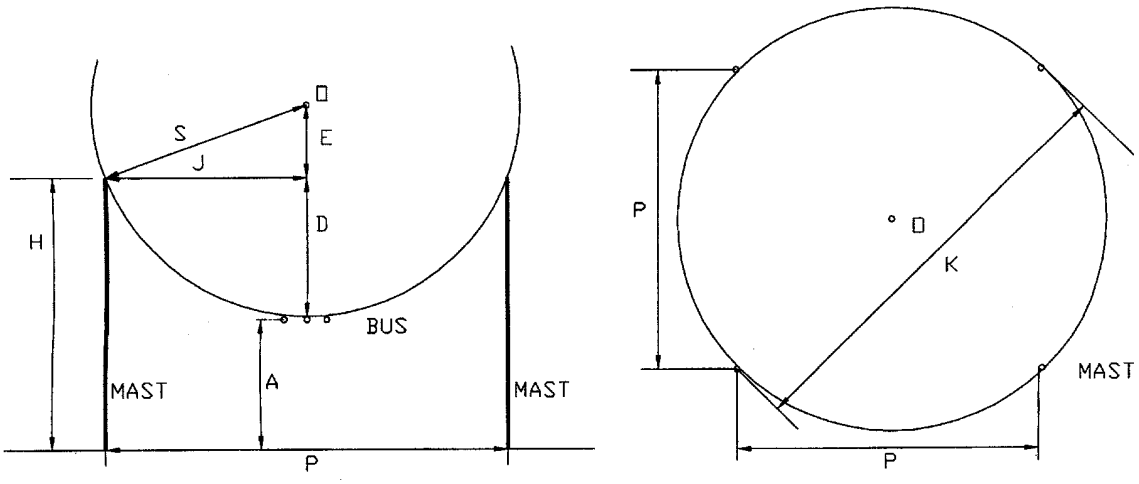

Exhibit B.5-4 —Calculations for mast protection of 230 kV substation (*Continued*)

Copyright © 1996 IEEE All Rights Reserved

Copyright The Institute of Electrical and Electronics Engineers, Inc.
Provided by IHS under license with IEEE
No reproduction or networking permitted without license from IHS
Not for Resale

Maximum distance between masts for vertical strike sphere supported by three masts

$$Q_1 = 2 \cdot \cos\left(\pi \cdot \frac{30}{180}\right) \cdot J_1 \qquad Q_2 = 2 \cdot \cos\left(\pi \cdot \frac{30}{180}\right) \cdot J_2 \qquad Q_3 = 2 \cdot \cos\left(\pi \cdot \frac{30}{180}\right) \cdot J_3$$

$Q_1 = 165.985$ ft $\qquad Q_2 = 169.387$ ft $\qquad Q_3 = 159.232$ ft

These values are the maximum separation of three masts for protection at the three bus heights A.

However, Q shall not be greater than X.

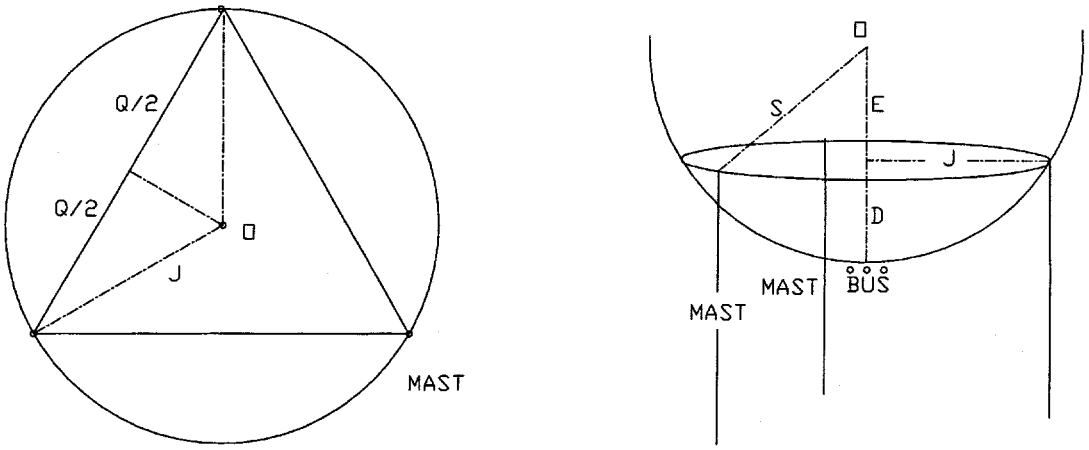

Exhibit B.5-4 —Calculations for mast protection of 230 kV substation (*Continued*)

Copyright © 1996 IEEE All Rights Reserved

Copyright The Institute of Electrical and Electronics Engineers, Inc.
Provided by IHS under license with IEEE
No reproduction or networking permitted without license from IHS
Not for Resale

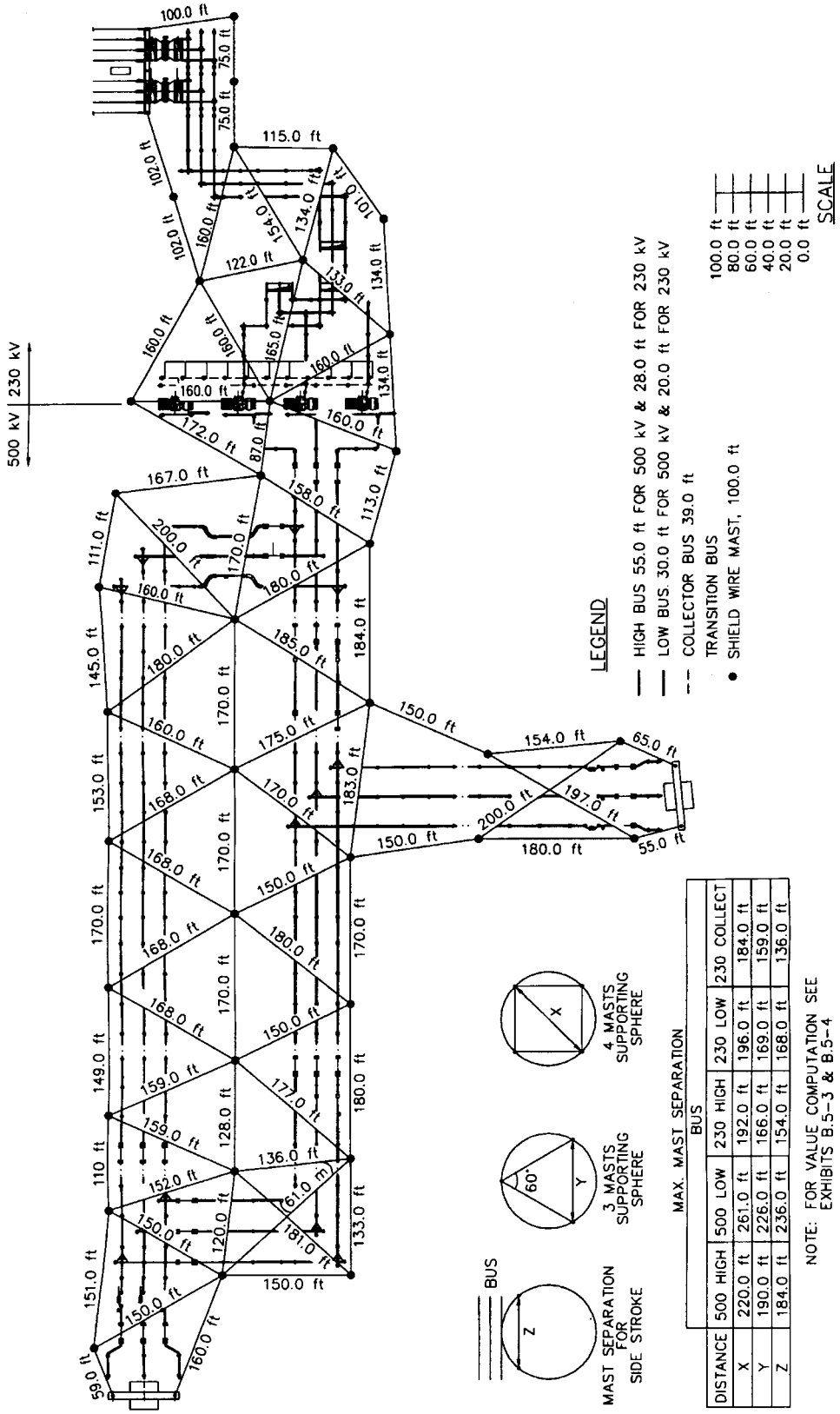

Figure B.5-3(a) —Shielding a 500/230 kV substation with masts using the rolling sphere method

Copyright © 1996 IEEE All Rights Reserved

Copyright The Institute of Electrical and Electronics Engineers, Inc.
Provided by IHS under license with IEEE
No reproduction or networking permitted without license from IHS
Not for Resale

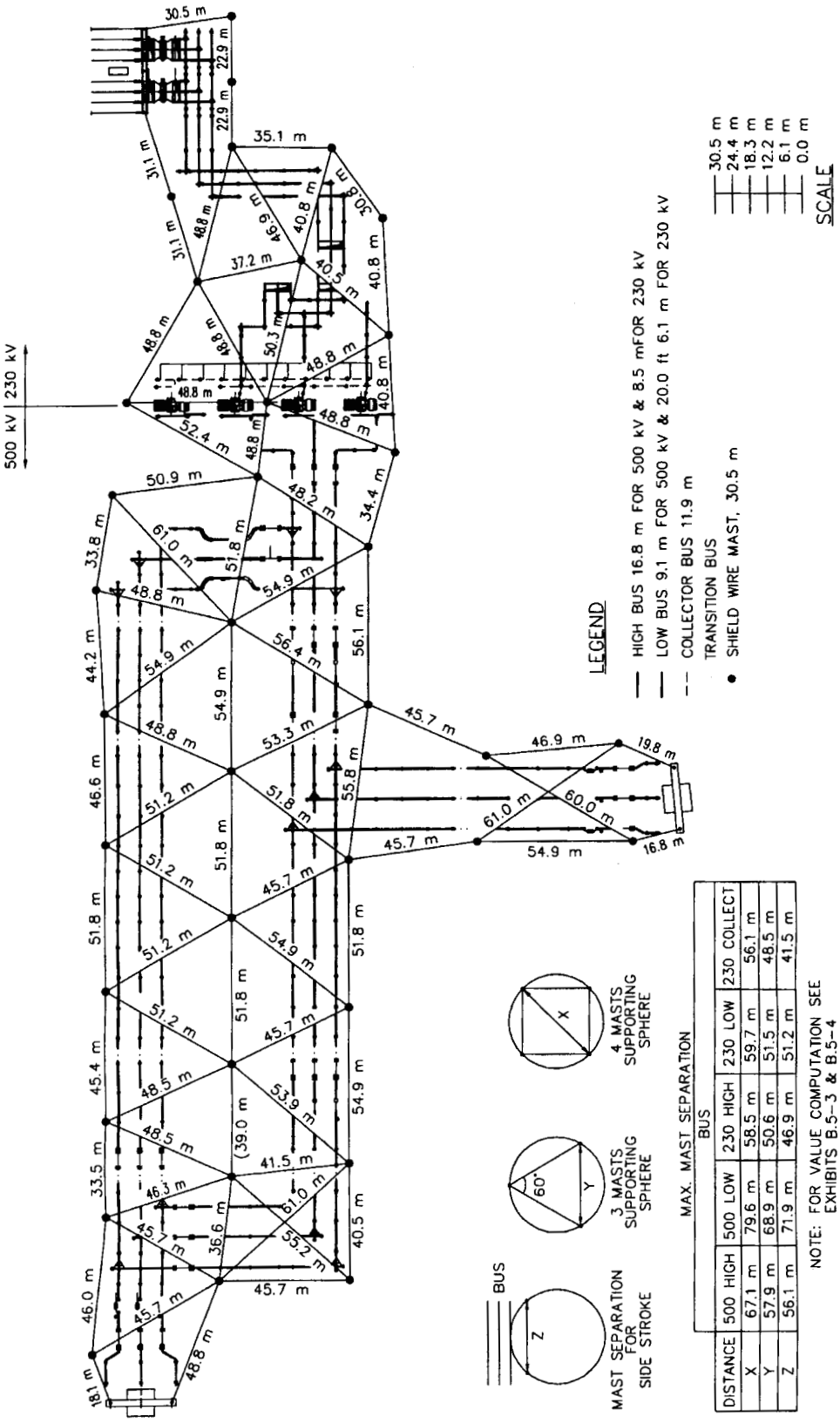

DISTANCE	BUS 500 HIGH	500 LOW	230 HIGH	230 LOW	230 COLLECT
X	67.1 m	79.6 m	58.5 m	59.7 m	56.1 m
Y	57.9 m	68.9 m	50.6 m	51.5 m	48.5 m
Z	56.1 m	71.9 m	46.9 m	51.2 m	41.5 m

Figure B.5-3(b) —Shielding a 500/230 kV substation with masts using the rolling sphere method (*Continued*)

Copyright © 1996 IEEE All Rights Reserved

Copyright The Institute of Electrical and Electronics Engineers, Inc.
Provided by IHS under license with IEEE
No reproduction or networking permitted without license from IHS
Not for Resale

500 kV substation example—Protection by shield wires (100 ft ht.)

$Z_S = 336\ \Omega$ BIL = 1800 kV

$$I_s = 2.2 \cdot \frac{\text{BIL}}{Z_s} \qquad \text{(ref Eq 5-2A)}$$

$I_S = 11.786$ kA

$k = 1.0$

$S = 26.25 \cdot k \cdot I_S^{0.65}$ (ref Eq 5-1B)

$S = 130.47$ ft

$H = 100$ assumed wire height in feet

$A_1 = 55$ $A_2 = 30$ height of 500 kV buses in feet

$R = \sqrt{S^2 - (S-H)^2}$ $R = 126.862$ ft

$T_1 = \sqrt{S^2 - (S-A_1)^2}$ $T_2 = \sqrt{S^2 - (S-A_2)^2}$

$T_1 = 106.427$ ft $T_2 = 83.236$ ft

$C_1 = R - T_1$ $C_2 = R - T_2$

$C_1 = 20.435$ ft $C_2 = 43.626$ ft

These values are the maximum horizontal separation of shield wire and bus for protection at bus height A.

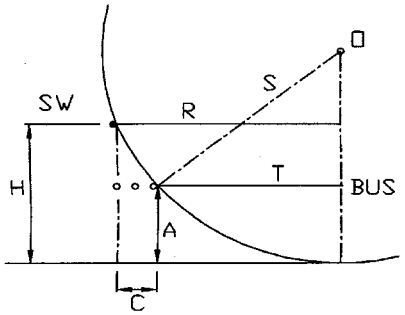

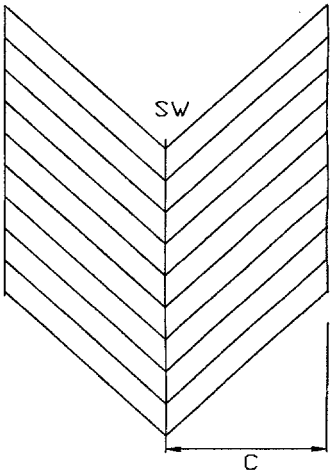

Exhibit B.5-5 —Calculations for shield wire protection of 500 kV substation

Copyright © 1996 IEEE All Rights Reserved

Copyright The Institute of Electrical and Electronics Engineers, Inc.
Provided by IHS under license with IEEE
No reproduction or networking permitted without license from IHS
Not for Resale

Maximum distance between two wires for vertical stroke

D must be less than or equal to $H - A$ for protection at height A.

$D_1 = H - A_1$ $D_2 = H - A_2$

$D_1 = 45$ ft $D_2 = 70$ ft

$E_1 = S - D_1$ $E_2 = S - D_2$

$E_1 = 85.47$ ft $E_2 = 60.47$ ft

$L_1 = \sqrt{S^2 - E_1^2}$ $L_2 = \sqrt{S^2 - E_1^2}$

$L_1 = 98.576$ ft $L_2 = 115.611$ ft

$X_1 = 2L_1$ $X_2 = 2L_2$

$X_1 = 197.153$ ft $X_2 = 231.221$ ft

These values are the maximum separation of shield wires for protection at bus height A.

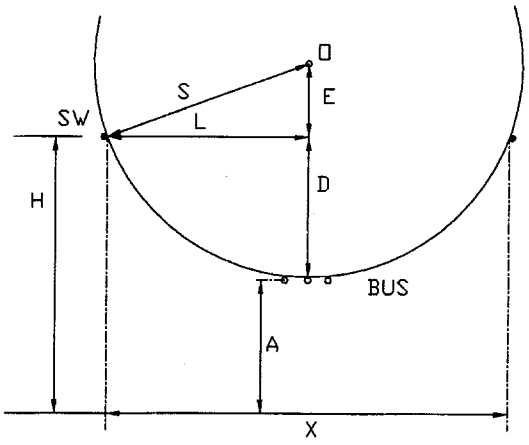

Exhibit B.5-5 —Calculations for mast protection of 500 kV substation (*Continued*)

Copyright © 1996 IEEE All Rights Reserved

Copyright The Institute of Electrical and Electronics Engineers, Inc.
Provided by IHS under license with IEEE
No reproduction or networking permitted without license from IHS
Not for Resale

230 kV substation example—Protection by shield wires (100 ft ht.)

$Z_S = 336\ \Omega$ BIL = 900 kV

$$I_s = 2.2 \cdot \frac{\text{BIL}}{Z_s} \qquad \text{(ref Eq 5-2A)}$$

$I_S = 5.893$ kA

$k = 1.0$

$$S = 26.25 \cdot k \cdot I_S^{0.65} \qquad \text{(ref Eq 5-1B)}$$

$S = 83.146$ ft

$H = 100$ assumed wire height in feet

$A_1 = 28$ $A_2 = 20$ $A_3 = 39$ height of 230 kV buses in feet

$R = \sqrt{S^2 - (S-H)^2}$ $R = 81.42$ ft

$T_1 = \sqrt{S^2 - (S-A_1)^2}$ $T_2 = \sqrt{S^2 - (S-A_2)^2}$ $T_3 = \sqrt{S^2 - (S-A_3)^2}$

$T_1 = 62.227$ ft $T_2 = 54.091$ ft $T_3 = 70.458$ ft

$C_1 = R - T_1$ $C_2 = R - T_2$ $C_3 = R - T_3$

$C_1 = 19.193$ ft $C_2 = 27.329$ ft $C_3 = 10.961$ ft

These values are the maximum horizontal separation of shield wire and bus for protection at bus height A.

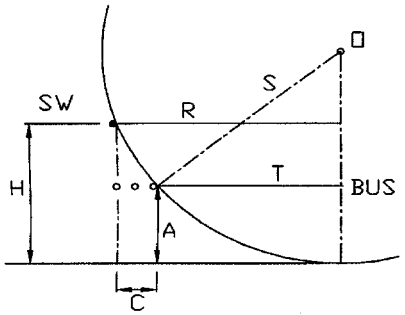

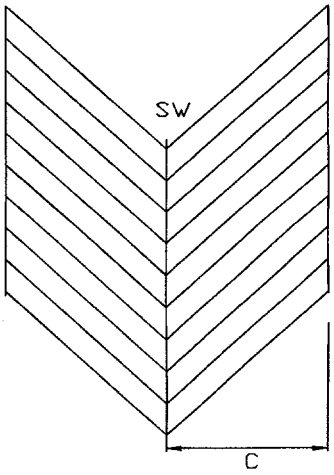

Exhibit B.5-6 —Calculations for shield wire protection of 230 kV substation

Copyright © 1996 IEEE All Rights Reserved

Copyright The Institute of Electrical and Electronics Engineers, Inc.
Provided by IHS under license with IEEE
No reproduction or networking permitted without license from IHS Not for Resale

Maximum distance between two wires for vertical stroke

D must be less than or equal to $H - A$ for protection at height A.

$D_1 = H - A_1$	$D_2 = H - A_2$	$D_3 = H - A_3$
$D_1 = 72$ ft	$D_2 = 80$ ft	$D_3 = 61$ ft
$E_1 = S - D_1$	$E_2 = S - D_2$	$E_3 = S - D_3$
$E_1 = 11.146$ ft	$E_2 = 3.146$ ft	$E_3 = 22.146$ ft
$L_1 = \sqrt{S^2 - E_1^2}$	$L_2 = \sqrt{S^2 - E_2^2}$	$L_3 = \sqrt{S^2 - E_3^2}$
$L_1 = 82.395$ ft	$L_2 = 83.086$ ft	$L_3 = 80.142$ ft
$X_1 = 2L_1$	$X_2 = 2L_2$	$X_3 = 2L_3$
$X_1 = 164.791$ ft	$X_2 = 166.173$ ft	$X_3 = 160.285$ ft

These values are the maximum separation of shield wires for protection at bus height A.

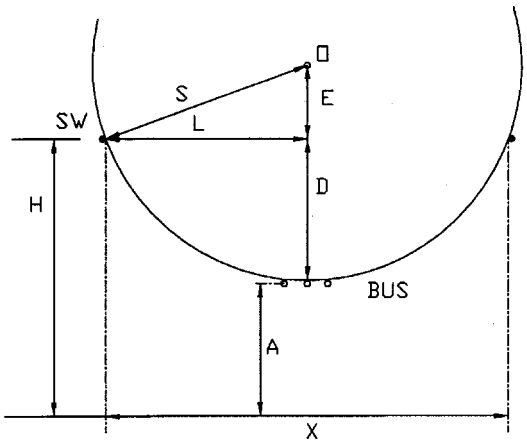

Exhibit B.5-6 —Calculations for mast protection of 230 kV substation (*Continued*)

Copyright © 1996 IEEE All Rights Reserved

Copyright The Institute of Electrical and Electronics Engineers, Inc.
Provided by IHS under license with IEEE
No reproduction or networking permitted without license from IHS
Not for Resale

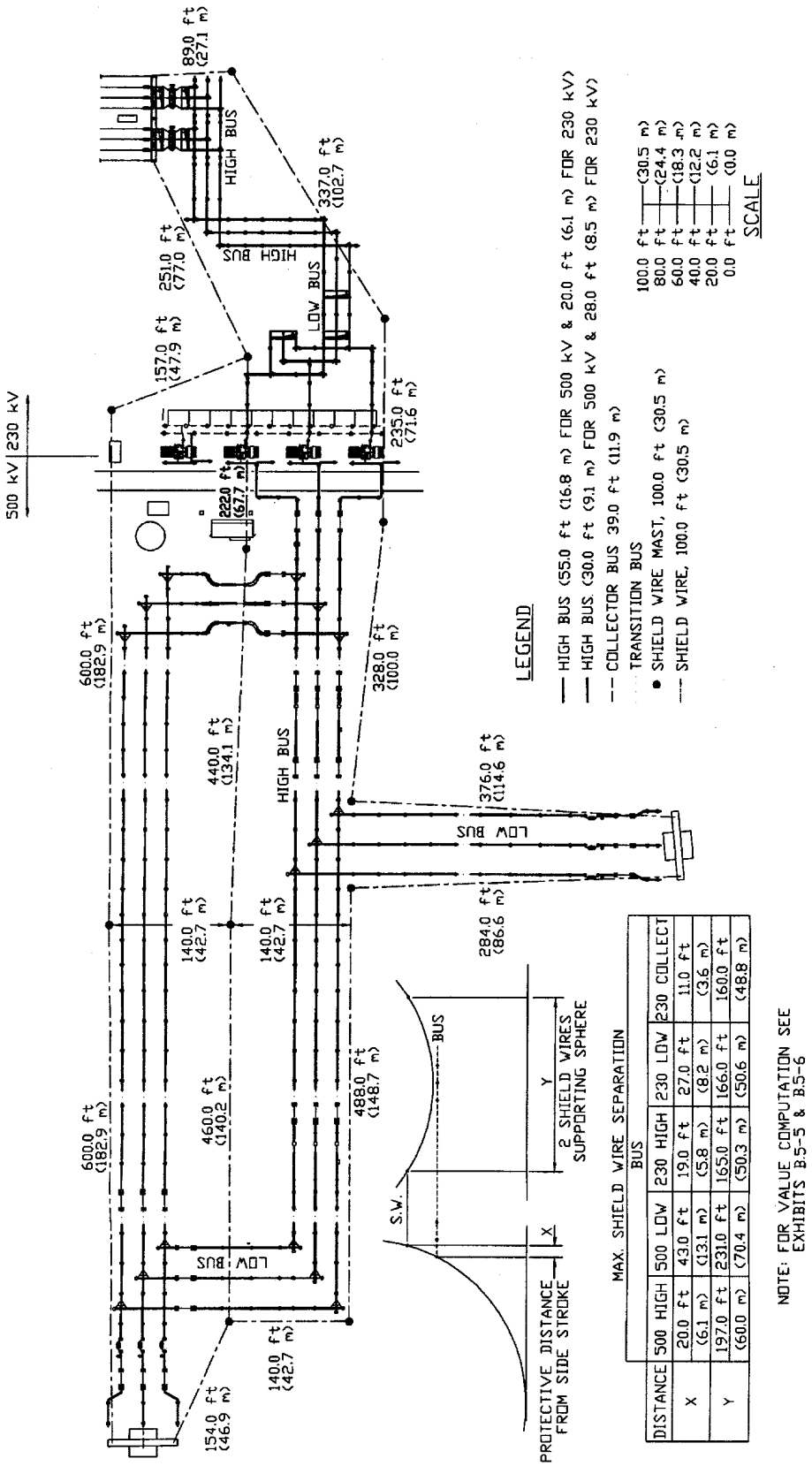

DISTANCE	500 HIGH BUS	500 LOW BUS	230 HIGH BUS	230 LOW BUS	230 COLLECT
X	20.0 ft (6.1 m)	43.0 ft (13.1 m)	19.0 ft (5.8 m)	27.0 ft (8.2 m)	11.0 ft (3.6 m)
Y	197.0 ft (60.0 m)	231.0 ft (70.4 m)	165.0 ft (50.3 m)	166.0 ft (50.6 m)	160.0 ft (48.8 m)

Figure B.5-4 —Shielding a 500/230 kV substation with shield wires using the rolling sphere method

Copyright © 1996 IEEE All Rights Reserved

Copyright The Institute of Electrical and Electronics Engineers, Inc.
Provided by IHS under license with IEEE
No reproduction or networking permitted without license from IHS
Not for Resale

Table B.5-1 —Summary of lightning protection calculations by the rolling sphere method

Shield wires—100 ft high wire

Separation of wires for protection against vertical strike

Calc	SW Ht (ft)	Collector (ft)	Bus High (ft)	Bus Low (ft)	Type of Stroke
Exhibit B.5-3	100	—	197	231	Vertical
Exhibit B.5-5	100	—	20	44	Side
Exhibit B.5-6	100	160	165	166	Vertical
Exhibit B.5-6	100	11	19	27	Side
Exhibit B.5-2	60	—	96	97	Vertical
Exhibit B.5-2	60	—	9	13	Side
Exhibit B.5-2	40	—	80	86	Vertical
Exhibit B.5-2	40	—	9	14	Side

Masts

Separation of masts for protection against strikes

Calc	Mast Ht (ft)	Collector (ft)	Bus High (ft)	Bus Low (ft)	Type of Stroke
Exhibit B.5-3	100	—	184	236	Side
Exhibit B.5-3	100	—	220	261	Vertical 4 Mast
Exhibit B.5-3	100	—	190	226	Vertical 3 Mast
Exhibit B.5-4	100	136	154	168	Side
Exhibit B.5-4	100	184	192	196	Vertical 4 Mast
Exhibit B.5-4	100	159	166	169	Vertical 3 Mast
Exhibit B.5-1	60	—	84	93	Side
Exhibit B.5-1	60	—	111	114	Vertical 4 Mast
Exhibit B.5-1	60		96	98	Vertical 3 Mast

B.6 Comparison of results of sample calculations

B.6.1 Results for 69 kV substation

Table B.6-1 gives the results of the application of masts and shield wires by the four methods for the 69 kV substation. The required number of masts and/or shield wires is identical for the fixed angle and the empirical methods, although the empirical method permits a shorter mast.

Copyright © 1996 IEEE All Rights Reserved

Copyright The Institute of Electrical and Electronics Engineers, Inc.
Provided by IHS under license with IEEE
No reproduction or networking permitted without license from IHS
Not for Resale

Table B.6-1 —Comparison of results for 69 kV substation

No. of masts/wires required	Method			
	Fixed angle	Empirical	EGM computer	EGM rolling sphere
No. masts required	1	1	6	6
No. wires required	2	2	4	4

Applying the EGM, however, requires six masts to protect the station. The reason for this is twofold:

a) The EGM attempts to provide 100% flashover protection,[2] whereas the other two methods permit a small failure rate.

b) The EGM computer method takes into account the voltage withstand capability of the station. The lower withstand voltage of the 69 kV station requires the use of a shorter striking distance in the application method, which in turn requires closer spacing of masts or wires to protect all areas.

B.6.2 Results for 500/230 kV substation

Table B.6-2 gives the results for the 500/230 kV substation example. The number of masts required for protection varies depending on the method used. An explanation does exist for some of the variation, however:

a) Each sample calculation method was prepared by a different engineer. Thus, the results reflect the degree of optimization and conservatism exercised by each engineer.

b) The designer of the computer program incorporated two conservative factors not used in the rolling sphere method. The first of these was to add a 0.9 multiplier in Eq 5-1 as suggested by Gilman and Whitehead [33]. The second factor that made the computer design more conservative was that the crest value of the ac bus voltage was subtracted from the withstand voltage of the insulators.[3] This factor can be significant in EHV substations. Of course, the same factors could have been applied to the equations used to arrive at the striking distance for the rolling sphere method. With this modification the results by the two methods would be very close.

Table B.6-2 —Comparison of results for 500/230 kV substation

No. of masts/wires required	Method			
	Fixed angle	Empirical	EGM computer	EGM rolling sphere
No. masts, 500 kV	53	32	46	32
No. masts, 230 kV	8	11	16	12
No. masts, total	61	43	62	44
No. wires, 500 kV	11	10	13	11
No. wires, 230 kV	2	2	5	5
No. wires, total	13	12	18	16

[2]This is not strictly true for the 69 kV example; see 5.3.6

[3]The assumption is that the ac polarity of the bus voltage at the instant that lightning strikes is such as to increase the stress on the insulators and reduce their withstand ability.

Copyright © 1996 IEEE All Rights Reserved

Copyright The Institute of Electrical and Electronics Engineers, Inc.
Provided by IHS under license with IEEE
No reproduction or networking permitted without license from IHS Not for Resale

Annex C Calculation of corona radius and surface impedance under corona (Informative)

C.1 Corona radius

In case of a single conductor, the corona radius R_c is given by Anderson [B4]:

$$R_c \times \ln\left(\frac{2 \times h}{R_c}\right) - \frac{V_c}{E_0} = 0 \quad \text{(C.1)}$$

where

R_c is the corona radius in meters
h is the average height of the conductor in meters
V_c is the allowable insulator voltage for a negative polarity surge having a 6 μs front in kilovolts (V_c = the BIL for post insulators)
E_0 is the limiting corona gradient, this is taken equal to 1500 kV/m

Eq C.1 can be solved by trial and error using a programmable calculator (an approximate solution is given in figure C.1).

In the case of bundle conductors, the radius of the bundle under corona R_c' [B4] is taken as follows:

$$R_c' = R_0 + R_c \quad \text{(C.2)}$$

where

R_c is the value for a single conductor as given by Eq C.1
R_0 is the equivalent radius of the bundle.

The calculation method of R_0 is given in C.2.

C.2 Equivalent radius for bundle conductor

In the case of a twin conductor bundle, the equivalent radius R_0 [B4] is given by

$$R_0 = \sqrt{r \times l} \quad \text{(C.3)}$$

where

r is the radius of subconductor in meters
l is the spacing between adjacent conductors in meters

Copyright © 1996 IEEE All Rights Reserved

Copyright The Institute of Electrical and Electronics Engineers, Inc.
Provided by IHS under license with IEEE
No reproduction or networking permitted without license from IHS Not for Resale

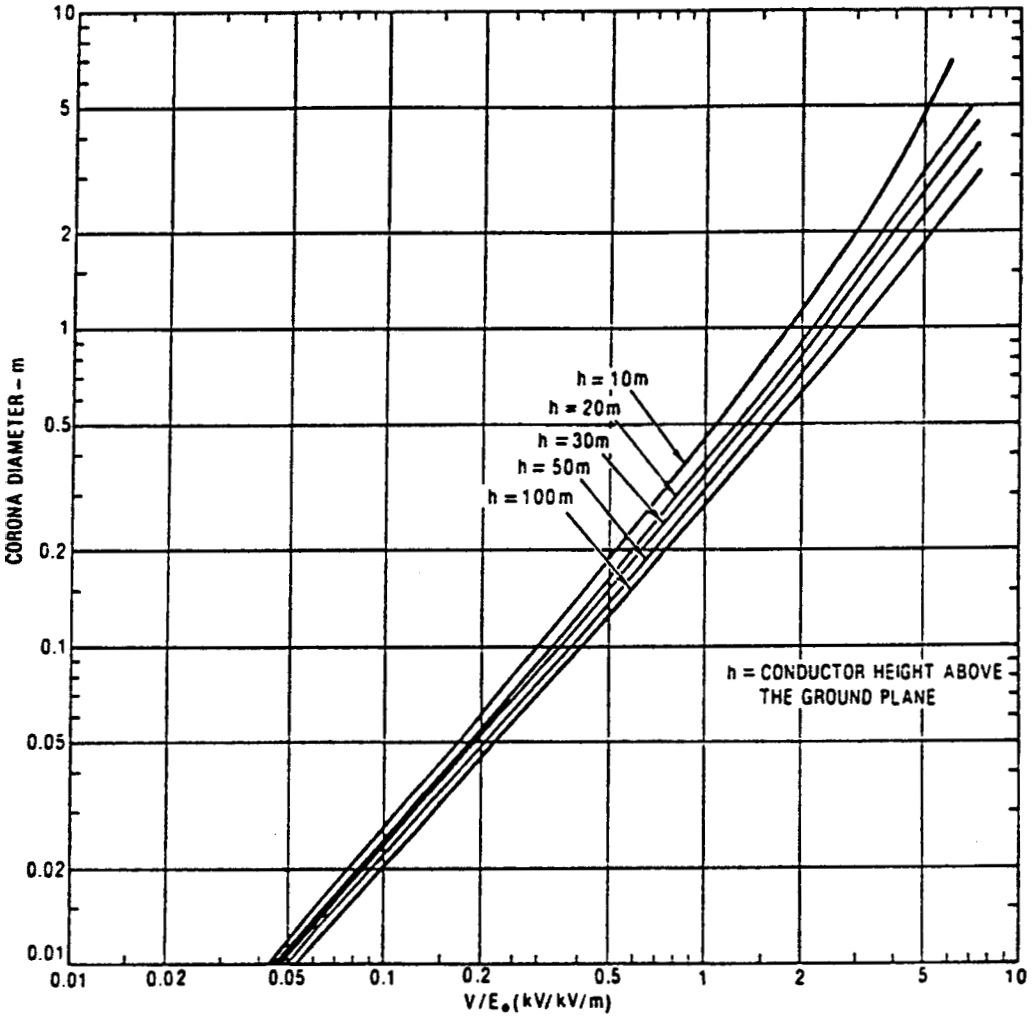

Reprinted with permission from *Transmission Line Reference Book 345 kV and Above*, Second Edition, Revised© 1982, Electric Power Research Institute, Palo Alto, CA.

Figure C.1—Approximate diameter of corona sheath around a single conductor under impulse conditions

In the case of a three-conductor bundle:

$$R_0 = \sqrt[3]{r \times l^2} \tag{C.4}$$

In the case of a four-conductor bundle:

$$R_0 = \sqrt[4]{\sqrt{2} \times r \times l^3} \tag{C.5}$$

In the case of more than four conductors:

$$R_0 = 0.5 \times l' \times \sqrt[n]{n \times \frac{2 \times r}{l'}} \tag{C.6}$$

Copyright © 1996 IEEE All Rights Reserved

Copyright The Institute of Electrical and Electronics Engineers, Inc.
Provided by IHS under license with IEEE
No reproduction or networking permitted without license from IHS
Not for Resale

where

l' is the diameter of the circle on which the subconductors lie
n is the number of subconductors

C.3 Surge impedance under corona

The surge impedance of conductors under corona in ohms is given by Brown [B15]:

$$Z_s = 60 \times \sqrt{\ln\left(\frac{2 \times h}{R_c}\right) \times \ln\left(\frac{2 \times h}{r}\right)} \quad \text{(C.7)}$$

where

h is the average height of the conductor
R_c is the corona radius (use Eq C.2 as appropriate)
r is the metallic radius of the conductor, or equivalent radius in the case of bundled conductors

Copyright © 1996 IEEE All Rights Reserved

Copyright The Institute of Electrical and Electronics Engineers, Inc.
Provided by IHS under license with IEEE
No reproduction or networking permitted without license from IHS Not for Resale

Annex D Calculation of failure probability (Informative)

D.1 Failure probability

For the three conditions described in 5.3.1 through 5.3.3 of this guide, if I_s is chosen according to Eq 5-2, there should theoretically be no equipment failures due to direct strokes. This is because only those strokes that could produce a surge voltage wave less than the BIL of the equipment were able to penetrate the shielding system, and these strokes should, therefore, cause no problem. Unfortunately, substation shielding that will provide such ideal protection is not always economical. This is especially true when one is working with substation equipment BIL levels below 550 kV. The designer is then faced with the problem of first determining the level of failure risk he or she is willing to base the design on, then developing a design that will meet this criteria. The following clauses discuss a method of determining the unprotected area of a design and show how to calculate expected failure rates.

D.2 Unprotected area

To visualize an unprotected area, refer again to figure 5-6. Assume that equipment is sized and located as shown and further assume that, based on equipment BIL levels, equipment can withstand stroke currents less than I_{so}. The associated strike distance is S_o. Based on the layout, the shield mast will provide protection for all stroke currents greater than I_s. However, those stroke current magnitudes between I_{so} and I_s could reach equipment and would be expected to cause damage. The unprotected area for this condition would be the shaded area shown in figure 5-6.

D.3 Probability of strokes causing equipment damage

Equation 2-2B or figure 2-4 can be used to determine the probability that any stroke will be greater than I_s, which is the level above which the shield masts will intercept the stroke. This probability is $P(I_s)$. The same equation or figure can be used to determine the probability that the stroke will be greater than I_{so}, where I_{so} is the level of stroke current that can be handled by the equipment based on its BIL. This probability is $P(I_{so})$. The probability that a stroke is less than I_s is 1.0 minus $P(I_s)$ or $P(<I_s)$. The probability that a stroke is less than I_{so} is 1.0 minus $P(I_{so})$ or $P(<I_{so})$. For all lightning strokes that descend upon the shaded area of figure 5-6, the probability that equipment damage will occur is $P(<I_s) - P(<I_{so})$ or $P(I_{so}) - P(I_s)$.

Example

These probabilities can best be demonstrated by the following example:

a) Assume that the stroke current for the striking distance S_o is 4.03 kA. Strokes of this magnitude may strike within the protected area.

b) Assume the strike distance S, above which protection is provided, is 40 m. From Eq 2-1D, the stroke current above which protection is provided is 11.89 kA.

c) The probability that a stroke will exceed 4.03 kA, using Eq 2-2B or figure 2-4, is 0.990.

d) The probability that a stroke will exceed 11.89 kA, using Eq 2-2B or figure 2-4, is 0.861.

e) Therefore, the probability that a stroke which descends upon the unprotected area will be of amagnitude that can cause equipment damage and failure is 0.990 – 0.861 = 0.129 or 12.9%.

D.4 Failure rate

The substation designer is basically concerned with the rate of failure of the shielding design or the number of years expected between failures. In D.3, the methodology was presented for the designer to determine the probability that a

Copyright © 1996 IEEE All Rights Reserved

Copyright The Institute of Electrical and Electronics Engineers, Inc.
Provided by IHS under license with IEEE
No reproduction or networking permitted without license from IHS Not for Resale

stroke in the unprotected area would cause failure. By knowing the number of strokes expected to descend upon the area, the failure rate can be determined.

The number of strokes per unit area expected in the vicinity of the substation is the ground flash density (GFD). GFD is calculated using Eq 2-3 or 2-4. The number of strokes expected to descend upon the area is the GFD multiplied by the unprotected area. The annual failure rate is the product of the number of strokes to the area times the probability that the stroke in the area will cause failure.

Example

The calculation of failure rate will be demonstrated by continuing the example begun in clause D.3.

a) Assume the outside radius of the unprotected area is 35 m and the inside radius of the unprotected area is 22 m. The unprotected area is $\pi[(35)^2 - (22)^2] = 2328\ m^2$ or $2.328 \times 10^{-3}\ Km^2$.

b) Assume the isokeraunic level is 50 thunderstorm-days per year. (*T* values across the USA can be read from figure 2-6). The GFD, from Eq 2-3A, is 6.0 strokes per square kilometer per year.

c) The annual number of strokes expected to descend into the unprotected area is $6.0 \times 2.328 \times 10^{-3} = 0.01397$ strokes/year.

d) The annual expected number of equipment failures due to direct lightning strokes, using the 0.129 probability developed in D3, is $0.01397 \times 0.129 = 0.00180$ failures/year or 556 years between failures.

The above calculated failure rate would be for the simplified single mast substation described in the example. If a utility had 20 such substations of identical design scattered throughout its system, the total system substation failure rate due to direct strokes would be 556 divided by 20 = 28 years between failures.

Copyright © 1996 IEEE All Rights Reserved

Copyright The Institute of Electrical and Electronics Engineers, Inc.
Provided by IHS under license with IEEE
No reproduction or networking permitted without license from IHS Not for Resale

Annex E IEEE questionnaire—1991

(informative)

IEEE questionnaire—1991

A SURVEY OF INDUSTRY PRACTICES REGARDING SHIELDING OF SUBSTATIONS AGAINST DIRECT LIGHTNING STROKES

(A Project of IEEE Working Group E5)
Abdul M. Mousa. Senior Member. IEEE
British Columbia Hydro
Vancouver, B.C., Canada V6Z 1Y3
R.J. Wehling, Senior Member, IEEE
United Power Association
Elk River, Minnesota, U.S.A.

Abstract - A survey of industry practices regarding shielding of substations against direct lightning strokes is presented and analyzed. The survey is based on responses from 114 companies including consultants and utilities both from within and from outside North America. The survey identifies the shielding design methods in use, the factors affecting the selection of a shielding method, the shielding design criteria and the governing factors, the performance of the different shielding methods and miscellaneous related aspects. The survey revealed a large number (35) of shielding failure incidents; 34 of which occurred in systems designed using either the fixed Shielding angle method or Wagner's 1942 method.

Keywords - LIGHTNING PROTECTION, ELECTRIC SUBSTATIONS: Lightning Protection, ELECTRIC SUBSTATIONS: Computer Applications, LIGHTNING: Analysis.

INTRODUCTION

This paper reports on a project of Working Group E5 of the IEEE Substations Committee which was done in connection with the preparation of a "Guide for Direct Lightning Stroke Shielding of Substations". A questionnaire covering 28 points was mailed during the closing months of 1990 to 258 consultants and utilities both from within and from outside North America. The analysis in this paper is based on the responses of 114 companies and most of those responses were received during January 1991. The distribution of the participants among the different Segments of the industry is as follows:

Utilities from U.S.A.	74
Utilities from Canada	10
Utilities from Outside North America	15
North American Consultants	15
Total	114

Participation from outside North America covered all continents: Europe (5), Asia (4), Australia (3), Africa (1), and South America (2).

The results of the survey are given in the following section. In each item, the question posed to the participants is first listed then an analysis of their responses is presented. It should be noted that some respondents did not answer all questions. This is partly because some questions do not apply to consultants (intended only for utilities) and also because some respondents did not readily have the data needed to answer all questions. Hence the percentage

--`,,`-`-`,,`,,`,`,,`---
Copyright © 1996 IEEE All Rights Reserved

Copyright The Institute of Electrical and Electronics Engineers, Inc.
Provided by IHS under license with IEEE
No reproduction or networking permitted without license from IHS
Not for Resale

distributions reported in the analysis of a question are based on the number of useful responses received for that question. However, the analysts for the important questions (e.g. nos. 1 and 2) is based on 114 responses since data were available for those questions from all participating companies. It should also be noted that any opinions included with the analysis are those of the authors and do not necessarily represent the opinion of every member of Working Group E5.

RESULTS OF THE SURVEY

Q1

For designing systems for shielding of substations against direct lightning strokes, which of the following methods (or a modified version thereof) are you using at present and to what voltage classes is it being applied?

a) Fixed shielding angle
b) Wagner's 1942 Method [1]
c) Lee's Rolling Sphere Method [2]
d) Mousa's 1976 EGM Method [3]
e) Sargent's 1972 3-D Method [4]
f) Linck's 1975 Method [5]
g) Dainwood's 1974 Method [6]
h) Mousa's Software Subshield (SBSHLD) [7]
i) Other; Please Specify.

Note that all shielding design methods can be divided into two main categories:

GEOMETRICAL methods: These assume that the shielding device (wire or mast) can intercept all the lightning strokes arriving over the subject area if the shielding device maintains a certain geometrical relation (separation and differential height) to the protected object. Methods (a) and (b) above fall into this category.

ELECTROGEOMETRIC MODELS (EGM's): These recognize that the attractive effect of the Shielding device is a function of the amplitude of the current of the lightning stroke. Thus, for a given shielding geometry, some of the less intense strokes would not be intercepted by the shielding system and may terminate instead on the live bus or other "protected" object. The way to accomplish "effective shielding" in this case is by limiting penetration of the shielding system to only those strokes which would not flashover the insulation or would not damage the protected object. Methods (c) through (h) above fall into this category.

Referring to item (i) in the above list, a total of 11 OTHER methods were reported by the respondents. These were divided into OTHER EGM's [8-11] and OTHER GEOMETRICAL METHODS (12-15) (References in foreign languages are not listed). Also, a few respondents (mostly municipal utilities operating in areas where the keraunic level is low) stated that they do not shield at all and hence a separate group was created for them. None of the respondents reported using the Sargent nor the Dainwood methods and hence these methods were dropped from the list. The number of users, both past and present, of Linck's method was rather negligible and hence that method was lumped with the OTHER EGM's. The number of those presently using Mousa's 1976 method was found to be small. Hence it was also decided to lump the remaining users under OTHER EGM's. In view of the above, the final listing contained 7 groupings.

92 WM 224-6 PWRD A paper recommended and approved by the IEEE substations Committee of the IEEE Paver Engineering Society for presentation at the IEEE/PES 1992 Winter Meeting, New York, New York, January 2630, 1992. Manuscript submitted May 21, 1991; made available for printing November 25, 1991.

Twenty of the respondents reported using more than one method. A typical example of this case is using the Rolling Sphere method for transmission voltages 138 kV and above and using the Fixed Angle method for the lower voltages. To avoid the distortion of the results by such cases, each participant was allotted one "vote". Thus a participant using

Copyright © 1996 IEEE All Rights Reserved

Copyright The Institute of Electrical and Electronics Engineers, Inc.
Provided by IHS under license with IEEE
No reproduction or networking permitted without license from IHS Not for Resale

2 methods was considered to have cast 0.5 vote for each of those 2 methods and a participant using 3 methods was considered to have cast 0.33 vote for each of those 3 methods.

Based on the above, Table I shows the extent of use of the different shielding design methods. This shows the following:

1) As of April 1991, only 4 design methods are widely used by the industry; the Fixed Shielding Angle method (32.5%), Mousa's Software Subshield (21.1%), Lee's Rolling Sphere method (16.3%), and Wagner's 1942 method (12.6%). None of the other methods currently has a significant number of users; 13 miscellaneous methods have a combined number of users totalling only 12.2% of the respondents.
2) About 50% of all respondents are using the GEOMETRICAL methods.

"Note that EGM's have been around since 1963 [11] and they are widely used in designing the shielding of power lines. On the other hand, this survey indicates that the conversion from GEOMETRICAL methods to EGM's has been slow where the design of substations is concerned. However, the faster conversion rate to a recent computerized EGM version [7] may indicate that substation designers accept the EGM approach but have tended to avoid it in the past because of dislike for the complexity which used to be involved."

Table II gives a comparison between North American and non-North American respondents. This stows a somewhat higher acceptance rate for EGM's outside North America.

Table I —Extent of Use of the Different Shielding Design Methods

METHOD	USERS, %	
Do not shield	5.3	
Fixed Shielding Angle	32.5	
Wagner's 1942 Method [1]	12.6	50.1
Other Geometrical Methods [12-15]	5.0	
Lee's Rolling Sphere Method [2]	16.3	
Software Subshield [7]	21.1	44.6
Other EGM's [3, 5, 8 - 11]	7.2	
Total	100.0	

Q2

If what you are using is a modified version of one of the above methods rather than the published version, please describe the difference.

Very few modifications were reported by the respondents. These are:

1) Using rolling sphere having a fixed radius (i.e. i value independent of the BIL of the bus).
2) One utility uses a combination of the German Standard VDE 0101 and the Gilman-Whitehead EGM.
3) One utility uses a combination of Wagner's and the rolling sphere methods.
4) One utility uses the rolling sphere method but allows higher exposure at the "corners" of the switchyard.

Q3

Which of the following substation shielding design methods did you use in the past but you are no longer using, and (approximately) when did you stop using it:

Copyright © 1996 IEEE All Rights Reserved

Copyright The Institute of Electrical and Electronics Engineers, Inc.
Provided by IHS under license with IEEE
No reproduction or networking permitted without license from IHS Not for Resale

a) Fixed Shielding Angle
b) Wagner's 1942 Method [1]
c) Lee's Rolling Sphere Method [2]
d) Mousa's 1978 EGM Method [3]
e) Sargent's 1972 3-D Method [4]
f) Linck's 1975 Method [5]
g) Dainwood's 1974 Method [6]

None of the participants ever used the Dainwood nor the Sargent methods. One company used Linck's method in the past but abandoned it in 1987 in favour of the Rolling Sphere method. The number of ex-users of the other 4 methods and the average date they stopped using them are as follows:

a) Fixed angle: 31 ex-users, 1982.
b) Wagner's: 8 ex-users, 1978.
c) Rolling Sphere: 11 ex-users, 1988.
d) Mousa's 1976 EGM: 7 ex-users, 1990.

The combined average abandonment date of the geometrical methods (Fixed Angle and Wagner's) was 1981. This is the average conversion date to EGM's by those currently using such methods, i.e. 18 years after the first EGM was introduced by Young et al [11] in 1963.

Table II —Comparison Between the Participants from Within and From Outside North America

CATEGORY	USERS, %.	
	USA & CANADA	OTHERS
Geometrical Methods	56.2	50.0
EGM's	43.8	50.0
Total	100.0	100.0

Q4

If you are <u>at present</u> using the fixed shielding angle method, please specify the angle, both positive (β) and negative (α), used for each voltage class to which the method is being applied (referring to Fig. 1, the angle is considered negative if the object is located between 2 shield wires or 2 masts and is considered positive when the object receives shielding only from a single wire or mast):

All except one of those responding to Q4 use the same value of the shielding angle regardless of the voltage class. Regarding angle β, 45° is used 51% of the time and 30° is used 45% of the time. The remaining 4% group includes one utility which uses a 15° angle and another utility which uses a 20° angle. The average value of 8 for all users is 37°. Regarding angle a, the majority use 45°, several use 60°, and the average for all users is 47°.

One company uses a 45° shielding angle for substations and only a 15° angle for power lines. While utilities usually attempt to shield their substations more completely than they do power lines, this respondent chose to give its lines better shielding. This could be a reflection of the fact that the swath (stroke collection area) of a power line adds up to many square kilometers over the length of the line, and hence collects a large number of strokes every year as compared to a substation with its small area. As a result, deficiencies in shielding are apt to show up quicker on power lines and corrective action will be taken sooner.

Q5

In your <u>present</u> practice, which is the preferred shielding device:

Copyright © 1996 IEEE All Rights Reserved

Copyright The Institute of Electrical and Electronics Engineers, Inc.
Provided by IHS under license with IEEE
No reproduction or networking permitted without license from IHS Not for Resale

a) Shield wires Masts
b) Masts
c) Both are used depending on layout

Q6

If you have checked item 5(b) above (MASTS), please state the reasons for your preference.

In response to Q5, 30% of participants stated that they prefer shield wires, 17% stated that they prefer masts and the remaining 53% use whichever device is more suitable to the layout of the substation under consideration. The reasons given by those who prefer masts are as follows:

1) More economical.
2) Aesthetics and being more suitable to low profile substations.

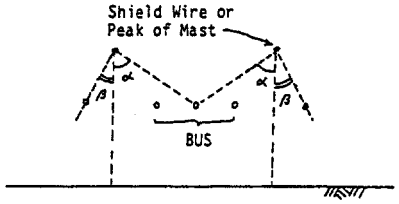

Figure 1 —The fixed shielding angle method.

3) A broken shield wire can have serious consequences (two utilities experienced such incidents), and shield wire maintenance requires an outage of the bus underneath. Some described masts as being more reliable. Presumably this refers to avoiding the risk listed above.
4) Easier to add to an existing substation while use of shield wires in such a case would impose additional stress on substation structures.
5) Ease of installation and simplicity of design.

On the other hand, two companies reported mast failures caused by vibration and one commented that masts are not desirable because they tend to be in the way of either maintaining the equipment or driving around.

It should be noted that the total length of the shield wires installed on the power lines of each utility is probably about 1000 times longer than the total length of the shield wires installed in substations. Also, the corresponding spans are significantly longer. Nevertheless, incidents of failure of power line shield wires (except for those which are also accompanied by failure of the conductors and or the tower) are rather rare. Such reliable performance is accomplished by power line designers by use of vibration dampers [16-18] and by operating the shield wires at lower tensions (measured in percent of the ultimate tensile strength). Implementing such measures in the design of the shield wires of substations would similarly guarantee reliable operation.

Regarding the cost and aesthetic aspects, it should be noted that more respondents find shield wires to be both more economical and better from the aesthetic point of view.

Q7

What is your present approach to designing shielding systems:

a) Aim for effective shielding.
b) Intentionally allow a certain shielding failure rate to reduce cost of shielding systems.

Q8

If you have checked item 7(b) above, please state the target shielding failure rate.

Copyright © 1996 IEEE All Rights Reserved

--`,,`-`-`,,`,,`,`,,`---

Copyright The Institute of Electrical and Electronics Engineers, Inc.
Provided by IHS under license with IEEE
No reproduction or networking permitted without license from IHS Not for Resale

83% of respondents stated that they aim for effective shielding. Regarding those who intentionally allow some shielding failures: 24% of them have no specific target shielding failure rate and 29% quote the 0.1% shielding failure rate which is associated with the Wagner method which they use. Another 35% quote various rates in the range of one failure per 50–1000 years. The remaining 12% stated that they allow 5–10% of the strokes terminating on the substation to cause shielding failures.

Note that the above response regarding what designers attempt to achieve does not correlate with the failures reported in response to Q20.

Q9

(For utilities) What is the approximate range of the keraunic levels (number of thunderstorm days/year) prevailing within your service area?

Q10

Do you vary the shielding design method/procedure depending on the keraunic level:

a) No
b) Yes. If so, please explain.

In response to Q10, all participants stated that they do not very the design procedure depending on the keraunic level. This result is not surprising, mainly because the keraunic level usually does not vary widely within the service territory of any one utility. Nevertheless, the keraunic level seems to have an impact on which design method is to be adopted. When the keraunic level (TD) was correlated with the design method, the following was found:

CATEGORY	AVERAGE TD OF USERS
Geometrical Methods	35.6
EGM's	41.8

This seems to indicate that utilities which are more severely impacted by thunderstorms prefer to use EGM's.

The following comments were made by the respondents in connection with Q10:

1) Two consulting engineers stated that they may consider relaxing the shielding criteria if the keraunic level is very low. This means using a larger angle where the fixed angle method is used.
2) The keraunic level indirectly affects the amount of shielding provided where partial shielding is allowed and the corresponding shielding failure rate is fixed (say at 1 failure/100 years).

Q11

(For utilities) Are there substations within your system having altitudes (height above mean sea level) exceeding 1000 m:

a) No.
b) Yes. If so, please state the highest altitude and the primary voltage(s) of those substations.

Copyright © 1996 IEEE All Rights Reserved

Copyright The Institute of Electrical and Electronics Engineers, Inc.
Provided by IHS under license with IEEE
No reproduction or networking permitted without license from IHS Not for Resale

About 20% of participating utilities have substations located at altitudes above 1000 m. The highest altitude reported is 3500 m and the average for those high altitude substations is about 1800 m. The corresponding voltages are up to 500 kV.

Q12

Do you vary the shielding design method/procedure depending on altitude:

a) No.
b) Yes. If so, please explain.

One respondent stated that he uses the derated value of the BIL (corresponding to the altitude of the substation) when applying the EGM. All other respondents stated that the shielding design method/procedure is independent of altitude.

Q13

In designing the grounding grid of your substations, what is the governing objective(s):

a) Limit the transient voltage rise occurring when the ground grid is discharging the lightning currents collected by the masts/shield wires in the substations, thus preventing backflash.
b) Limiting 60/50 Hz step end touch potentials related to a fault in the Substation.
c) Other. Please specify.

The objective of this question was to determine whether the design of the grounding grid included any features related to lightning protection. Category (c) turned out to be mainly the controlling of the ground potential rise (GPR) to protect telecommunication cables entering the substation. The target grounding resistance used to achieve this was reported to be in the range 0.5–5.0Ω. Using such low values incidentally serves to prevent backflash. Seven percent of respondents fell into category (c), another 7% fall in category (a), and the remainder (86%) design mainly to control step and touch potentials. Note that the step and touch voltages can always be made safe by reducing the mesh size and by covering the surface with a layer of crushed rock. The corresponding value of the substation grounding resistance, and hence the GPR and risk of backflash, could still be high if the total area of the substation is small and/or the resistivity of the soil beneath it is high.

Some utilities stated that they install ground rods at the sites of surge arresters and at the structures carrying masts or shield wires. A typical design consists of a 4 rod system forming a 3 m × 3 m square and the rods are 3 m long, 19 m diameter (0.75″). Of course, the above ground rod assemblies are also bonded to the grounding grid.

Q14

(For utilities) At present, what is the highest voltage class in your system?

Q15

(For utilities) Do you have plans for adding higher voltages to your system within the next 10–15 years:

a) No.
b) Yes. If so, please state the planned higher voltage(s).

The part of Q1 regarding the voltage classes to which a shielding design method is being applied revealed that there is no upper limit to the voltage class to which any method is being applied. However, correlating Q14 to the shielding design method used by the respondent gave the data shown in Table III. This shows that a majority of the utilities owning higher voltage systems use EGM's while a majority of those owning lower voltage systems use geometrical methods. Correlating Q15 to the shielding design method revealed e similar trend: 7 of the 11 utilities which are planning to add higher voltages use EGM's. This gives a ratio of 7/11=63.6% as compared to the 54.3% listed in the

Copyright © 1996 IEEE All Rights Reserved

Copyright The Institute of Electrical and Electronics Engineers, Inc.
Provided by IHS under license with IEEE
No reproduction or networking permitted without license from IHS Not for Resale

above table for use of EGM's among those owning the higher voltage systems. The above findings are not surprising: the move into voltages of 500 kV and above or the plan to do so is usually accompanied by re-examination of all aspects of the company's design practice. Such re-evaluation tends to lead to adoption of more sophisticated design methods.

Table III —Effect of Voltage on the Shielding Design Method

Highest Voltage	Shielding Method Category	
	Geometrical	EGM's
< 500 kV	63.4%	36.6%
500 kV and above	45.7%	54.3%

Q16

What is the effect of voltage class on your shielding design method:

a) The same criteria are applied to all voltages.
b) Better shielding is provided to the higher voltage classes.
c) Other than the above. If so, please explain.

71% of respondents fall into category (a), 24% fall into category (b) and the remaining 5% fall into category (c). The replies of utilities which stated in Q1 that they use more than one design method is consistent with category (b) above: most of them stated that they use the Wagner or the Fixed Angle methods to design their lower voltage substations and use an EGM method for designing their higher voltage substations. The few respondents falling into category (c) stated that they either do not shield at all their distribution substations (69 kV and below) or provide very little shielding to them.

Q17

(For utilities) Are the transmission lines in your system:

a) Shielded along their entire length.
b) Only short sections near the terminals are shielded.
c) Depends on voltage class. If so, please explain.

77% of responding utilities shield all their power lines along their entire lengths. Of the remaining 23%, 4 utilities shield only short sections of the power lines near the terminals. It is interesting that one utility in Europe used this practice before 1980 but has provided full shielding for all their power lines built since then. Several practices were reported under group (c) including the following:

1) The higher voltage lines are fully shielded and the distribution lines 69 kV and below are either not shielded at all or only short sections near the terminals are shielded.
2) Within the same voltage class: some lines are shielded while others (the older ones) are not.
3) Some distribution lines are shielded while others are equipped with surge arresters at intervals along their lengths.
4) Within the same voltage class: the single circuit lines are not shielded while double circuit lines are shielded.

Three of the utilities which do not shield their substation do shield their power lines either over the entire length or for 1 km at the terminals. A comment relevant to this practice is given under Q4.

Copyright © 1996 IEEE All Rights Reserved

Copyright The Institute of Electrical and Electronics Engineers, Inc.
Provided by IHS under license with IEEE
No reproduction or networking permitted without license from IHS Not for Resale

Q18

Do you provide shielding for a vertical break disconnect switch blade in the open position?

67.3% of respondents provide shielding for a vertical break disconnect switch blade in the open position.

Q19

In the electrogeometric model method, the current of the stroke is usually assumed to be divided (upon terminating on the bus) into 2 equal components travelling in opposite directions. However "doubling" may take place when an open breaker or an unprotected transformer (without surge arrester) is encountered. Do you take such doubling effect into consideration in your design:

a) No.
b) Yes. If so, please elaborate.

Eight of the respondents stated that they take the voltage doubling effect into consideration. On closer examination of their comments and their reply to other questions, the following was found:

1) Two of them are referring to protection against the travelling waves arriving over the transmission lines (the procedure for calculating the allowable separation between the arrester and the protected equipment), rather than protection against direct lightning strikes to the substation.
2) Four others do not use EGM's, but rather use Wagner's or the fixed angle method and hence their replies are not relevant.
3) The remaining two respondents use the rolling sphere method. That method, unless modified by the user, does not provide for the doubling effect. Those two respondents, as well as several others, talk about the use of surge arresters rather than a change in the shielding design calculation method.

In view of the above, there seems to be a universal agreement that the doubling effect not be taken into consideration in the shielding design procedure itself. Of course, arresters where available will protect, to the extent possible, against overvoltages regardless of whether the source is a travelling wave arriving over a power line or a direct strike to the substation. Arresters are universally provided at all transformers and shunt reactors. Some respondents suggest using them too at power line entrances, at the main bus, at normally open breakers, and at any other breaker which has significant exposure. Four respondents proposed using rod gaps at breakers, at line entrances and/or at bus end points. It should be noted, however, that operation of a rod gap constitutes a fault within the substation. This may cause a serious system stability problem. Also, upon recovery from the fault, the sudden re-energization of all transformers in the substation may cause ferroresonance leading to arrester and/or transformer damage.

Q20

Have you had instances where shielding failure occurred or equipment was damaged and shielding failure is suspected to be the cause:

a) No.
b) Yes. If so, please give details.

27 participants reported occurrence of shielding failures. All of these except one use geometrical methods (Fixed Angle: 20, Wagner: 4, other geometrical methods: 2). The explanation for the only case where an EGM method (Rolling Sphere) failed seems to be as follows: lightning struck the end section of a main bus and hence "voltage doubling" occurred; a factor which the design method ignores. Seven of the above 27 utilities did not provide details. The remaining 20 utilities reported a total of 35 specific shielding failure incidents. This includes one company which reported a total of 8 incidents. This respondent uses a 45° shielding angle (angle α in Fig. 1) and their keraunic level is 50–58 days/year. The average keraunic level for the 27 utilities which reported shielding failures is 50 days/year, and the keraunic levels for 26 of them are in the range 10–70. (The remaining case significantly exceeds 70 days/year.)

Copyright © 1996 IEEE All Rights Reserved

Copyright The Institute of Electrical and Electronics Engineers, Inc.
Provided by IHS under license with IEEE
No reproduction or networking permitted without license from IHS Not for Resale

Correlating Q20 to Q7 and Q8 revealed the following: 22 of the 27 companies which experienced failures aim for effective shielding and another 4 companies expect to get the 0.1% shielding failure rate which is associated with the Wagner method which they use. The above clearly indicates that designers are not achieving the protection they expect from the Geometrical methods. It is Interesting to note that EGM's were first developed in response to reports of excessive outage rates for EHV lines that were designed using fixed angles or the Wagner method. Lightning protection codes [19, 20] also turned to the EGM to improve the protection of buildings and structures. Further, Golde [21] pointed out weaknesses in using scale model tests to investigate shielding. He concluded that the results of such tests indicated too high a protective ratio, especially for tall structures. His observations now appear to be confirmed by the theory of the EGM.

Q21

Is the control building usually

a) Included in the shielded zone provided for the bus.
b) Separately shielded.
c) Not shielded.

A clarification of the intent of Q21 is in order: equipment inside a building cannot receive a direct lightning strike. However, a lightning strike to the building can damage this vital structure itself and/or indirectly damage the control wiring and facilities through the side-flash mechanism. Examples of separate shielding for buildings can be found in the national lightning protection codes [19, 20].

39% of the respondents to Q21 fall in category (a), 6% fall in category (b), while the remaining 55% do not shield the control building.

Q22

What is your preferred option for the materials of the shielding system:

a) Metallic masts (or spikes on top of metallic structures).
b) Wood poles carrying lightning rods on top (plus riser wires).
c) Shield wires carried on metallic supports.
d) Shield wires supported on wood poles (plus riser wires).

38.9% of respondents fall into category (a), 1.4% fall in category (b), 49.3% fall in category (c), and the remaining 10.4% fall in category (d). The following is noted:

1) The entries under item (d) include one utility which uses concrete poles to support the shield wires.
2) The use of wood poles to support shield wires or lightning rods does not seem to be very popular. This is unfortunate because it would be more appropriate to reduce the cost of shielding, where desired, by using cheaper materials rather than by providing only partial shielding.
3) The relatively high ratio of mast users indicates lack of realization of the shortcomings of those devices. This is further discussed under Q6.

Q23

When shield wires or masts are carried on metallic supports, do you:

a) Provide copper wires running down the structures.
b) Rely on conductivity of the structure.

33% of respondents stated that they provide copper wires running down the metallic structure supporting the shield wire/lightning rod. One respondent commented that the copper wire is needed because the conductivity of the

Copyright © 1996 IEEE All Rights Reserved

Copyright The Institute of Electrical and Electronics Engineers, Inc.
Provided by IHS under license with IEEE
No reproduction or networking permitted without license from IHS Not for Resale

structure is not effective, while another commented that the copper wire is not needed because the structure has a lower surge impedance. A third respondent stated that they provide copper wires in case of masts (because the cross-section of the structure is small) but rely on conductivity of the structure in case of shield wires (because the cross-section of the structure is large).

Q24

Do you consider surrounding terrain features when designing the shielding system:

a) No.
b) Yes. If so, please describe a typical situation.

Only 6% of respondents stated that they take terrain features into consideration and they gave the following as typical situations:

1) Case where terrain levels vary within the substation or the substation is located on a hill or surrounded by higher terrain.
2) Case where incidental shielding is available from adjacent smoke stacks, buildings, or antennas.
3) Case where storms move in mostly from one direction. Shielding would be adjusted in such a case.

One respondent interpreted the term “terrain features” to include the last towers of the power lines connected to the substation. Of course, the shielding effect of such towers is an integral part of the shielding of the substation and should be taken into consideration by all designers.

Q25

Do you have a published standard or guideline on design of substation shielding systems?

Replies to Q25 were analyzed for all respondents as one group, for the sub-group using EGM methods, and for the sub-group using geometrical methods, and the results are given in Table IV. This shows that most respondents (63%) do not have a company standard on shielding. It also shows that those who have a standard are mostly the users of EGM methods.

Table IV —Availability of a Company Shielding Standard

GROUP	HAVE A STANDARD?		
	YES	NO	TOTAL
EGM Users	59%	41%	100%
Geometry Users	19%	81%	100%
All Respondents	37%	63%	100%

Q26

Does your shielding design method include use of a computer program (other than Subshield)?

a) No.
b) Yes. If so, please describe briefly.

Only 7 participants (i.e. 6% of the total) reported that they have been using a computer program for designing shielding systems:

--`,,`,,-`-`,,`,,`,`,,`---
Copyright © 1996 IEEE All Rights Reserved

Copyright The Institute of Electrical and Electronics Engineers, Inc.
Provided by IHS under license with IEEE
No reproduction or networking permitted without license from IHS
Not for Resale

1) Six for applying the rolling sphere method. Two of these involve the use of CAD rather than a special program.
2) One for applying Mousa's 1976 method.

Q27

(For utilities) Do you have HVDC in your system or plan to add it:

a) No.
b) We already have HVDC. If so, please state the voltage.
c) We are planning to add HVDC. If so, please state the voltage.

16 of the responding utilities either have HVDC in their system or are planning to add it. The ratio of those using EGM methods among this group is basically similar to that for all respondents.

Q28

When was your substation shielding design procedure last revised and/or reapproved:

a) Within the last 3 years.
b) 3 - 5 years ago.
c) 5 - 10 years ago.
d) More than 10 years ago.

Replies to Q28 were analyzed for all respondents as one group, for the sub-group using EGM methods, and for the Sub-group using GEOMETRICAL methods, and the results are given in Table V. This shows that 42.1% of all respondents have not examined their design procedure during the last 10 years. The results suggest that it may be time for industry to re-examine their shielding practice after this long interval as they would with other design practices.

SUMMARY AND CONCLUSIONS

1) As of April 1991, only 4 shielding design methods are widely used by the industry: the Fixed Shielding Angle Method (32.5%), Mousa's Software Subshield (21.1%), Lee's Rolling Sphere Method (16.3%), and Wagner's 1942 Method (12.6%). The above is based on data from 114 companies including consultants and utilities both from within and from outside North America.

Table V —Distribution of Respondents in Terms of "Age" of their Shielding Design Procedure (%)

GROUP	YEARS SINCE PROCEDURE LAST REVISED				
	<3	3-5	5-10	>10	TOTAL
EGM Users	59.0	16.4	16.7	7.9	100%
Geometry Users	6.3	7.4	16.6	69.7	100%
All Respondents	29.8	11.4	16.7	42.1	100 %

2) About 50% of all respondents are still using the GEOMETRICAL methods (Fixed Angle, Wagner, etc.). The other 50% who use electrogeometric models (EGM's) switched, on average, to such methods in 1981, i.e. 18 years after the first EGM was introduced by Young et.al. in 1963.
3) Noting that EGM's are widely used for designing the shielding of power lines, the conversion by station designers from the GEOMETRICAL methods to EGM's has been rather slow. However, the faster conversion rate to a recent computerized EGM version [7] may indicate that substation designers accept the EGM

Copyright © 1996 IEEE All Rights Reserved

Copyright The Institute of Electrical and Electronics Engineers, Inc.
Provided by IHS under license with IEEE
No reproduction or networking permitted without license from IHS Not for Resale

approach but have tended to avoid it in the past because of dislike for the complexity which used to be involved.

4) The survey revealed a surprisingly large number (35) of shielding failure incidents. All of these except one occurred in substations designed using either the Wagner method or the fixed shielding angle method. Also, all except one of the designers of those substations stated that they basically aim for effective shielding. The above clearly indicates that designers are not achieving the protection they expect from the Geometrical methods.
5) The use of EGM's seems to be more widely spread among utilities having maximum system voltages of 500 kV and above and also among utilities located in areas where the keraunic levels are higher. Such utilities also tend to have better documentation (in the form of company standards) of their design practices.
6) About 42% of all respondents have not re-examined their design procedure during the last 10 years (one participant submitted for the 1990 survey the same standard which was submitted for an earlier survey done in 1974). This indicates that a re-examination of shielding design procedures is overdue in many companies.

REFERENCES

[1] Wagner, C.F., McCann, G.D., and Lear, C.M. (1942). "Shielding of Substations", AIEE Trans., Vol. 61, pp. 96 – 100, 448.

[2] Lee, R.H. (February 1982). "Protect Your Plant Against Lightning", Instruments and Control Systems, Vol. 55, No. 2, pp. 31 – 34.

[3] Mousa, A.M. (1976). "Shielding of High-Voltage and Extra-High-Voltage Substations", IEEE Trans., Vol. PAS-95, No. 4, pp. 1303 – 1310.

[4] Sargent, M.A. (1972). "Monte Carlo Simulation of the Lightning Performance of Overhead Shielding Networks of High Voltage Stations", IEEE Trans., Vol. PAS-91, No. 4, pp. 1651 – 1656.

[5] Linck, H. (1975). "Shielding of Modern Substations Against Direct Lightning Strokes", IEEE Trans., Vol, PAS-90, No. 5, pp. 1674 – 1679.

[6] Dainwood, W.H. (March 1974). "Lightning Protection of Substations and Switchyards Based on Streamer Flow Theory", M.Sc. Thesis, University of Tennessee, Knoxville, Tennessee.

[7] Mousa, A.M. (1991). "A Computer Program for Designing the Lightning Shielding Systems of Substations", IEEE Trans. on Power Delivery, Vol. 6, No. 1, pp. 143—152.

[8] Anderson, J.G. (1982). "Lightning Performance of Transmission Lines", Chapter 12 (53 pp.) of Second Edition of Transmission Line Reference Book 345 kV and Above, EPRI, Palo, Alto, California.

[9] Gilman, D.W., and Whitehead, E.R. (March 1973). "The Mechanism of Lightning Flashovers on High-Voltage and Extra-High-Voltage Transmission Lines", Electra, No. 27, pp. 65—96.

[10] Standards Association of Australia (l983). Lightning Protection, Standard No. 1768, Sidney, Australia.

[11] Young, F.S., Clayton, J.M., and Hileman, A.R. (1963). "Shielding of Transmission Lines", IEEE Trans., Vol. 582, pp. 132—154.

[12] Beck, E. (June 1962). "Lightning Flashover on High Towers", Transmission and Distribution, Vol. 14, No. 6, pp. 34—35.

[13] Bewley, L.V. (1963). Travelling Waves on Transmission Systems, Dover Publications, New York, N.Y. (first published in 1933).

Copyright © 1996 IEEE All Rights Reserved

Copyright The Institute of Electrical and Electronics Engineers, Inc.
Provided by IHS under license with IEEE
No reproduction or networking permitted without license from IHS Not for Resale

[14] Brown Boveri Co. (1978). Switchgear Manual, 6th edition, pp. 378—386, Mannheim, Germany.

[15]Griscom, S.B. (20 March 1961). "New Lightning Flashover Theory Proposed", Electrical World, Vol. 155, No. 12, pp. 64—65.

[16] Doocy, E.S., Hard, A.R., Rawlins, C.B., and Ikegami, R. (1979). Transmission Line Reference Book: Wind-Induced Conductor Motion, EPRI, Palo Alto, California.

[17] CIGRE Working Group (1970). "Aeolian Vibration on Overhead Lines*, CIGRE Paper No. 22-11, 21 pp.

[18] Canadian Electrical Association (July 1988). "Internal Damping of ACSR Conductors and Alumoweld and Galvanized Ground Wires", CEA R&D; Report No. 144 T 307 (2 volumes).

[19] Canadian Standards Association (1987). Installation Code for Lightning Protection Systems, Standard No. B72-M87, Rexdale, Ontario, Canada.

[20] NFPA. (1986). Lightning Protection Code. (US) National Fire Protection Association, Code No. NFPA 78.

[21] Golde, R.H. (1941). "The Validity of Lightning Tests and Scale Models", Journal IEE, Vol. 88, Part II, No. 2, pp. 67—68.

Abdul M. Mousa (M '79, SM '82) received the B.Sc. and M.Sc. in Electrical Engineering from Cairo University, Cairo, Egypt, in 1965 and 1971, respectively, and received the Ph.D. in 1986 from the University of British Columbia, Vancouver, Canada. He is Senior Electrical Engineer with the Transmission Design Department, British Columbia Hydro and Power Authority, Vancouver, B.C., Canada. Prior to joining B.C. Hydro in May 1978, he was a Senior Engineer with the Department of Power Systems Planning and Research, Teshmont Consultants Inc., Winnipeg, Canada. He has published many papers and discussions on several subjects including lightning protection, electric fields at ground level under transmission lines, electrostatic and electromagnetic induction and the safety procedures for work on de-energized lines. Dr. Mousa is a member of the IEEE Power Engineering Society and is a registered Professional Engineer in the Province of Ontario and British Columbia, Canada.

R.J. (Jean) Wehling received his B.S.E.E. from the a in 1960. Following graduation he was employed for several years by a consulting firm in Abilene, Texas. In 1962 he joined the engineering staff of United Power Association in Elk River, Minnesota where he is supervisor of bulk substation and transmission engineering. Mr. Wehling is chairman of the PES Substations Committee working group dealing with direct stroke shielding of substations. He is registered in the State of Minnesota as a professional engineer.

DISCUSSION

N. Barbeito (Florida Power Corporation, St. Petersburg, Florida): The authors are to be commended for their work in collecting and presenting the results of the survey to the industry. As a member of Working Group E5, however, I felt a need to respond to some of the editorial comments made throughout the paper. The editorial comments provided a negative overtone to the use of the Geometrical Methods. The following are my views based on our Company's experience.

1) Florida Power Corporation (Keraunic level 80-100), has been a successfully using the fixed angle method of protection for over 30 years. The two shielding failures that were reported in the survey occurred in older substations in areas which were unprotected. Protection was subsequently provided with no additional problems.
2) The authors made the stateroom that the reported shielding failures (35) of those using the Geometric Methods indicated that we were not achieving the degree of protection desired. I do not agree with the conclusion due to the fact that the exposure was not properly analyzed. For instance, assuming the following conservative estimates of (Geometrical Methods):
   100 utilities responding

Copyright © 1996 IEEE All Rights Reserved

Copyright The Institute of Electrical and Electronics Engineers, Inc.
Provided by IHS under license with IEEE
No reproduction or networking permitted without license from IHS Not for Resale

Average of 50 substations
Average of 10 years exposure
Shielding Failure Rate (SFR) $35 / 100 \times 50 \times 10 = 0.0007$
failure / substation-year

3) The explanation of the single failure of the EGM is speculative in nature. The fact remains that the bus was struck.
4) The statement“ … EGMs were first developed in response to rupees of excessive outages rates for the EHV lines that were designed using the fixed angles or the Wagner method”, is partially correct in that it does not address the following:
   a) Fixed Angle: The designer can always select a more conservative angle. At the time no consideration was given to the additional height of the phases [23].
   b) Wagner Method: This method provides curves to protect structures of a maximum height of 100 ft. The EHVs exceeded this height [11] [22] [23].

REFERENCES

[22] Armstrong, H.R. and Whitehead, E.R. (1964) “A Lightning Stroke Pathfinder”, IEEE Trans., Vol. PAS-83, No. 12, pp. 1223–1227.

[23] Horvath, T. (Ed.) Computation of Lightning Protection, England, Research Studies Press Ltd. 1991

Manuscript received March 3, 1992.

ABDUL M. MOUSA and R.J. WEHLING: The authors wish to thank Mr. Barbeito for his interest in this paper. Wagner’s method is based on applying l.5×40μs voltage impulses to a scale model. Wagner claimed that his tests physically simulated what happens in nature when lightning strikes ground objects. We will briefly prove hereafter that Wagner’s claim is invalid and hope that this will convince the users of the GEOMETRICAL methods to switch to EGM’s.

A lightning flash usually starts by the development of a downward from the base of a cloud. This advances at a relatively low speed and it is only after an ionized path has been established cloud and earth that the fast return stroke takes place. The downward leader progresses under the influence of two forces: the general attraction of the ground plane with its zero-potential, and the attraction of the pockets of space charge which randomly exist in the spaces between clouds and ground. The path of the downward leader takes the form of discrete zigzag steps. Except for the last step which is called the “final jump”, the movement is mainly governed by the distribution of the pockets of space charge; the details of the features of the ground plane being immaterial in that respect. The final jump condition is reached when the average electric field across, the gap between tip of downward leader and a grounded object becomes high enough to initiate an upward leader. The length of the gap at that instant is called the “striking distance”.

To simplify the analysis assume the downward leader to be vertical. Consider the geometry shown in Fig. 2 and let Q be the charge of the downward leader. If Q was smaller, the downward leader will have to get closer to ground before becoming able to induce upward leader, ie. the striking distance S becomes smaller. On other hand, S becomes larger if Q was larger because the field across the gap will be reached while the tip of the leader is still further away from the ground. From the above it follows that S is a function of Q:

$$S = f_1 (Q) \tag{1}$$

When the return stroke takes place, its function is to neutralize the charge Q. Hence the current of the return stroke I is also a function of Q:

$$I = f_2 (Q) \tag{2}$$

Copyright © 1996 IEEE All Rights Reserved

Copyright The Institute of Electrical and Electronics Engineers, Inc.
Provided by IHS under license with IEEE
No reproduction or networking permitted without license from IHS Not for Resale

From (1) and (2),

$$S = f_3(I) \tag{3}$$

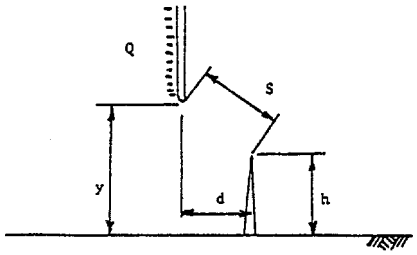

Figure 2 —The final jump to a ground object.

A ground object would not attract a lightning flash to itself, and hence would not divert it away from other objects, unless the flash arrives within striking distance of the ground object. The above shows that the attractive range of a shielding device (wire or mast) is a function of the amplitude of the return stroke. Consider the case shown in Fig. 3 in which a bus W is located halfway between two shield wires G_1 and G_2, and a downward leader arrives directly above the bus. If the amplitude of the return stroke is small as indicated in Fig. 3A, then the lender will never get within attractive range from the shield wires. Hence it will progress until it reaches point P_1 then it strikes the bus. On the other hand, if the amplitude of the return stroke is large as indicated in Fig. 3B, then the shielding system will intercept the leader at point P_3 before it gets within striking distance of the bus at point P_2. The above shows that no shielding system can protect against all strokes. The EGM recognizes that physical fact by basing the design on the maximum stroke which would not cause flashover if it penetrated the shielding system. On the other hand, the GEOMETRICAL methods falsely claim that a given geometry can achieve 100% shielding.

Wagner's method failed to simulate the actual physical phenomenon because:

1) The field across the gap is not produced by a long leader having a variable controllable charge but rather by the magnitude of the voltage applied to an electrode having a fixed height above the ground plane of the scale model. Wagner assumed that height to correspond to the height of the cloud above ground and found it to have some effect on the results. This is one other failure of Wagner's method. The step-by-step development of the lightning leader clearly indicates that the striking distance (and hence the attractive range of a ground object) is independent of the height of the cloud.
2) Wagner's method did not and could not account for the effect of the pockets of space charge.

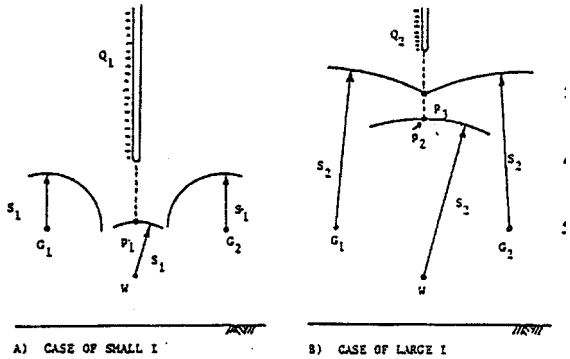

Figure 3 —Effect of amplitude of the return stroke on effectiveness of shielding.

Copyright © 1996 IEEE All Rights Reserved

Copyright The Institute of Electrical and Electronics Engineers, Inc.
Provided by IHS under license with IEEE
No reproduction or networking permitted without license from IHS
Not for Resale

3) Since the downward leader advances at a relatively low speed, the rate-of-rise of the electric field across the gap to ground is slow and is actually of the order used in "switching surge" tests. Since breakdown depends on the rate-of-rise, Wagner's use of fast 1.5×40μs surges was in error.
4) Most downward lightning leaders are negatively charged. On the other hand, Wagner used positive polarity impulses.

If Wagner's method occasionally happens to produce usable results, this is only accidental. It is not true that Wagner's method has a valid application range in terms of bus heights. As shown in the closure of [7], there are low bus bright cases for which Wagner's method gives invalid results. The only excuse for continuing to use Wagner's and the Fixed Angle methods was that the EGM's were complex. This difficulty has now been eliminated by the introduction of Subshield [7].

The response to the other points raised by Mr. Barbeito is as follows:

1) About 50% of the 114 participating utilities used GEOMETRICAL methods, i.e. 57 rather 100 companies. Also many of them were consultants or small utilities. Hence the average number of substations per respondent should be about 25 rather than 50. Further, records are not always kept of shielding failures and the incidents are often attributed to other causes because of the belief that the bus is effectively shielded. It is reasonable to assume that the actual number of shielding failures is twice the 35 reported cases, i.e. 70. The above gives a shielding failure rate of:
   70 / (57×25×10) = 0.005 failures / yr / substation
   While this may appear low, we should remember that a single incident at a major substation can lead to widespread blackouts. Further, providing effective shielding often involves little or no additional cost.
2) The explanation of the single reported failure of the EGM is not speculative; it was provided by the respondent.
3) Adopting lower shielding angles for the higher bus heights amounts to indirectly adopting the concepts of the EGM.
4) The two shielding failures reported by Florida Power Corp. were not included in the survey.
5) One of the authors (A.M. Mousa) has first hand knowledge of cases where shielding failures did occur more than once on buses which are fully shielded in accordance with Wagner's method. Please see the closure of [7].

Copyright © 1996 IEEE All Rights Reserved

Copyright The Institute of Electrical and Electronics Engineers, Inc.
Provided by IHS under license with IEEE
No reproduction or networking permitted without license from IHS Not for Resale

Annex F The Dainwood method (Informative)

Dainwood's method (introduced in a 1974 M.Sc. thesis) is an application to the configurations encountered in substations of a method proposed in 1970 by Braunstein for use on power lines. In Braunstein's method, the charge density along the length of the downward leader is assumed to be constant. The leader is assumed to progress in the vertical direction at a velocity equal to 0.1% of the speed of light, and the charge density is calculated as a function of the current of the return stroke. Wave equations are then used to calculate the strength of the electric field in space at the location of the object that is to be analyzed. Upward streamers are assumed to be generated from the object when the electric field reaches the critical value. That critical value was set at 10 kV/cm for the surface of the ground, 3 kV/cm for shield wires, and 5 kV/cm for phase conductors. Braunstein's method was not adopted by the industry in favor of the approach used by Young et al. and by Whitehead and his associates. Similarly, the adaptation to substations proposed by Dainwood received very limited application.

Copyright © 1996 IEEE All Rights Reserved

Copyright The Institute of Electrical and Electronics Engineers, Inc.
Provided by IHS under license with IEEE
No reproduction or networking permitted without license from IHS
Not for Resale

Annex G Direct lightning stroke protection (Informative)

(Reproduction of [B74], which is not widely available)

DIRECT STROKE LIGHTNING PROTECTION

J. T. Orrell
Black & Veatch, Engineers-Architects
Presented At
EEI Electrical System and Equipment
Committee Meeting
Washington, DC
October 25, 1988

INTRODUCTION

The electric utility engineer is required to design facilities that will operate reliably in a hostile environment. There are many "enemies" in this hostile environment, such as wind, ice, pole decay, and vandals who attack electric utility facilities, but perhaps the toughest enemy to understand and guard against is mother nature's lightning.

Lightning has been with us since the beginning of time, but only in comparatively recent years has the phenomena become even partially understood. Over the past 10 years substantial progress has been made by research scientists end engineers in resolving the physical characteristics of a lightning flash end in refining lightning statistics. The development of a lightning stroke and the flashover of insulators and other electric power equipment is a very complex electromagnetic event, and good hard data about the subject is lacking. In spite of these problems and complexities, the practicing engineer must do his job, which is to design, construct, operate, and maintain a system that will remain in service almost 100 percent of the time, even during lightning conditions.

This paper addresses new lightning protection design concepts as they relate to direct stroke protection of electric utility substations. The paper develops the basic concept of the lightning stroke, end describes equipment basic insulation level (BIL), simplistic modeling of a lightning shielding system, and shielding system failure probability. It is not the intent of this paper to provide full design guide details for complex substation lightning protection. Such details will be published in the near future by the IEEE Transmission Substation Working Group E-5, of which the author of this paper is a member.

LIGHTNING STROKE PHENOMENA

STROKE FORMATION

Numerous theories have been advanced regarding the formation of charge centers, charge separation within a cloud, and the ultimate development of lightning strokes.

The processes occurring within a cloud formation which cause charge separation are complicated, but what is important to the practicing utility engineer is that a charge separation occurs in thunderstorm clouds. Experiments using balloons equipped with electric gradient measuring equipment have been performed to investigate typical charge distribution in thunderclouds. These experiments have shown that, in general, the main body of a thundercloud is negatively charged and the upper part positively charged. A concentration of positive charge appears to exist frequently in the base of the cloud. The charge distribution in the cloud causes an accumulation of charge of the opposite polarity on the earth's surface and on objects (trees, buildings, electric power lines, and structures, etc.) beneath the cloud. An example of 8 charged cloud and the resulting electric fields is shown on Figure II.

Copyright © 1996 IEEE All Rights Reserved

Copyright The Institute of Electrical and Electronics Engineers, Inc.
Provided by IHS under license with IEEE
No reproduction or networking permitted without license from IHS
Not for Resale

The electrical charge concentrations within a cloud are constrained to the size of the cloud. The cloud size, in relation to the earth, is small. Therefore, the electrical gradient in the cloud is much greater than at the earth. Because of this, an electrical discharge tends to be initiated at the cloud rather than at the ground.

The actual stroke development occurs in a two-step process. The first step is ionization of the air surrounding the charge center and the development of "step leaders" which propagate charge from the earth from the cloud is equal to the charge (usually positive) that flows upward from the earth. Since the propagation velocity of the return stroke is so much greater than the propagation velocity of the step leader, the return stroke exhibits a much larger current flow (rate of charge movement). Magnetic-link investigations on electrical transmission systems indicate that approximately 90 percent of all strokes are seen as negative charge flows to the transmission system.

The various stages of a stroke development are shown on Figure 2. Approximately 55 percent of all lightning flashes consist of multiple strokes which traverse the same path formed by the initial stroke. Their stepped leader has a propagation velocity much greater than that of the initial stroke (approximately 3 percent the speed of light) and is referred as a "dart leader"

Mr. Orrell may be contacted at (913) 339-2000.

STRIKE DISTANCE

Return stroke current magnitude and strike distance (length of the last step leader) are interrelated. This follows from the premise that small charge centers from which low return stroke currents develop contain less energy to charge the step leader than does a large charge center. The strike distance and the ultimate return stroke current are related by the following equation from the 1982 *Transmission Line Reference Book—345 kV and Above*.

$$S = 10\ I_s^{0.65} \tag{1}$$

$$I_s = 0.029\ S^{1.54} \tag{2}$$

where

S = strike distance in meters, and
I_s = return stroke current in kiloamperes (kA).

This relationship is illustrated on Figure 3, which shows strike distance versus return stroke current, hereafter referred to as stroke current in this paper.

STROKE WAVE SHAPE AND PROBABILITIES

Neither the current magnitude nor wave shape of all lightning strokes is identical. The response of electric power equipment to lightning surges is a function of wave shape and current magnitude. Therefore, in the design of systems, it is important to know what typical stroke wave shapes to expect, the probability of variance of these wave shapes, and the probability of various stroke current magnitudes.

Copyright © 1996 IEEE All Rights Reserved

Copyright The Institute of Electrical and Electronics Engineers, Inc.
Provided by IHS under license with IEEE
No reproduction or networking permitted without license from IHS Not for Resale

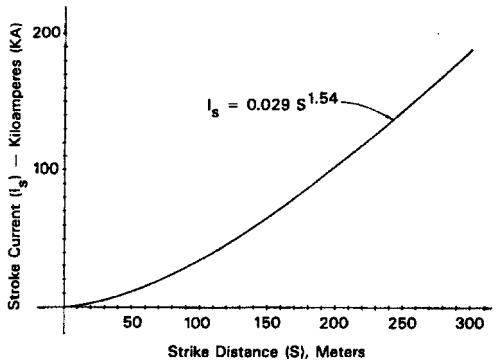

Figure 3 —STRIKE DISTANCE VERSUS STROKE CURRENT

A lightning stroke is movement of electrical charge, or coulombs, from one point to another in the form of a "wave" of charge, as depicted on Figure 4. Anyone observing the passage of a lightning surge would observe a very rapid change in the number of coulombs, followed by a much slower change in the number of coulombs as the surge passed. Observance of this event would be similar to floating in a calm pool of water and suddenly observing a wave of water approaching. As the wave passed, the observer would rise to the crest of the wave and then would drop back to his original position as the wave completely passed.

Since the definition of current is the time rate of change of electrical charge, or i(t) = dq/dt, the movement of electrical charge in a lightning stroke is current. If en observer was in a fixed location observing the passage of a lightning wave, the time required to witness the passage of the crest of the wave would be very short. If he observed more than one stroke, he would discover that the time required to observe the passage of the crest of each wave differs. This holds true even among multiple strokes in any flash. Figure 5 shows the current wave

Copyright © 1996 IEEE All Rights Reserved

Copyright The Institute of Electrical and Electronics Engineers, Inc.
Provided by IHS under license with IEEE
No reproduction or networking permitted without license from IHS
Not for Resale

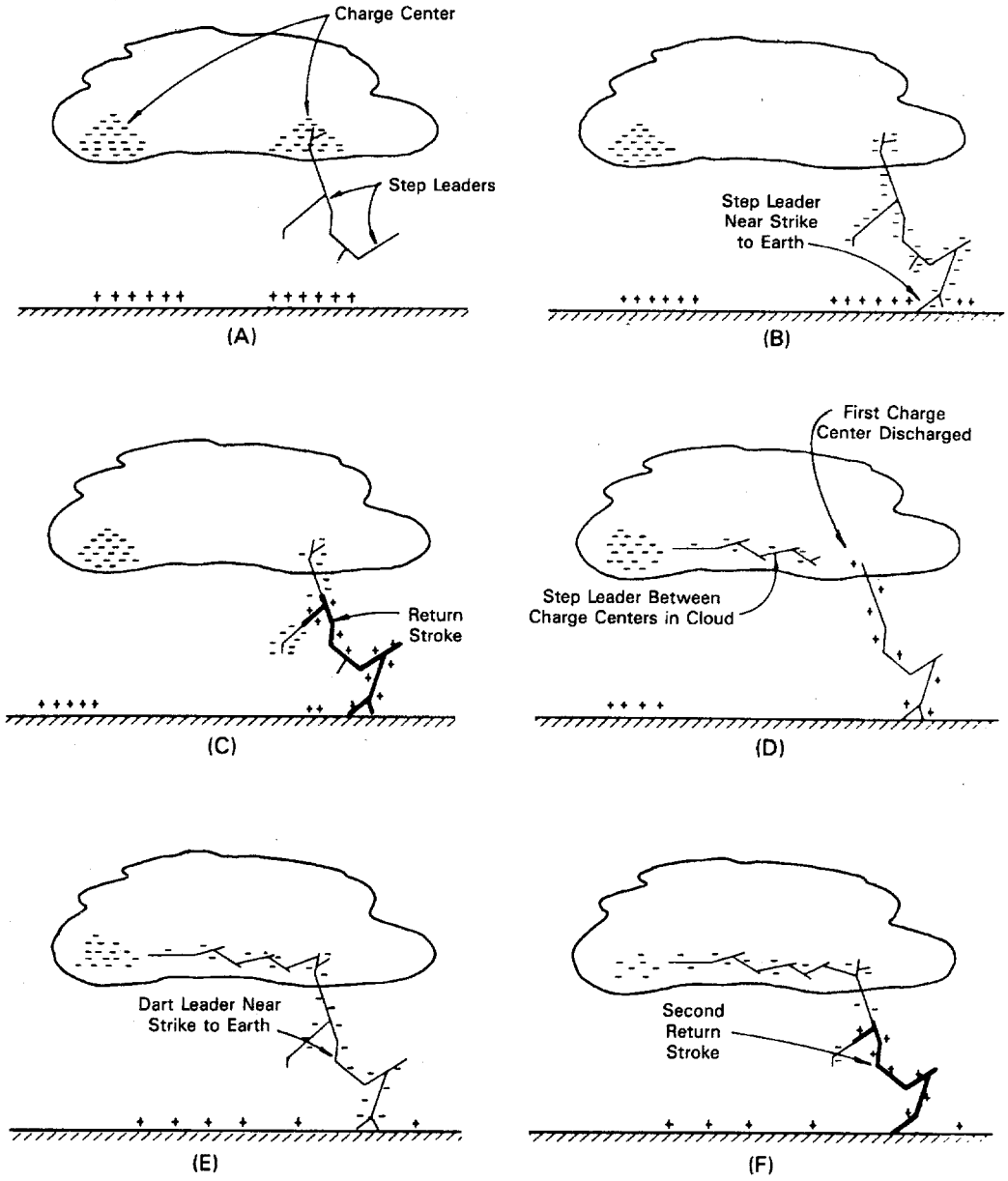

Adapted from: *Electrical Transmission and Distribution Reference Book,* by Central Station Engineers of the Westinghouse Electric Corporation, East Pittsburgh, Pennsylvania, Fourth Edition, 1964.

Figure 2 —CHARGE DISTRIBUTION AT VARIOUS STAGES OF LIGHTNING DISCHARGE

Copyright © 1996 IEEE All Rights Reserved

Copyright The Institute of Electrical and Electronics Engineers, Inc.
Provided by IHS under license with IEEE
No reproduction or networking permitted without license from IHS
Not for Resale

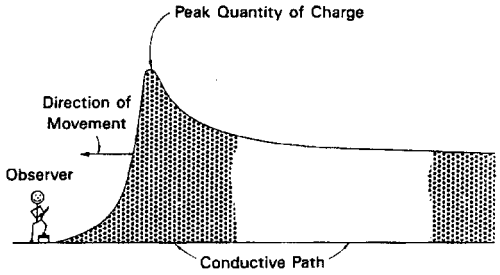

Figure 4 —LIGHTNING WAVE CHARGE MOVEMENT

shapes of the first and subsequent strokes obtained from actual measurements made by researchers at Mount San Salvatore, Switzerland. The voltage stress created on equipment because of two different wave shapes is different for each wave. In multiple stroke lightning strikes, there are times when the first stroke creates the greatest voltage stress on electrical equipment, and there are times when the subsequent strokes create the greatest voltage stress.

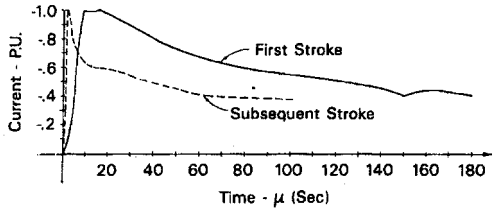

Adapted from: *Transmission Line Reference Book, 345 kV and Above,* Second Edition, Electric Power Research Institute, Palo Alto, California 1982.

Figure 5 —TYPICAL WAVESHAPE FOR FIRST AND SUBSEQUENT STROKES AT MOUNT SAN SALVATORE, SWITZERLAND

To compare equipment response to a lightning surge, it has been necessary for the electric power industry to develop a simple expression for a lightning wave, and develop a standard wave shape. In reality, it is the stroke's crest current end the rapidly rising frontal currents near crest that play the key role in determining the response of equipment to lightning surges. A realistic, but very simple approximation of a lightning current wave is a ramp current wave, as shown on Figure 6. The wave rises to crest in 1.2 microseconds, and then decays to 1/2 its crest value in 50 microseconds. The wave is referenced as e 1.2 by 50 microsecond wave.

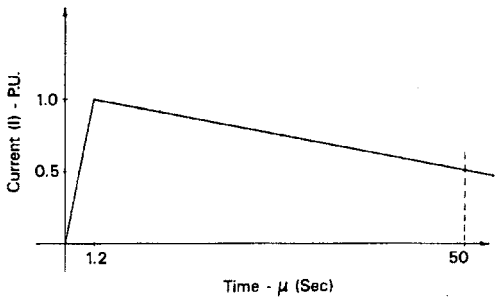

Figure 6 —SIMPLIFIED INDUSTRY STANDARD LIGHTNING STROKE WAVESHAPE

Copyright © 1996 IEEE All Rights Reserved

Copyright The Institute of Electrical and Electronics Engineers, Inc.
Provided by IHS under license with IEEE
No reproduction or networking permitted without license from IHS
Not for Resale

The probabilities that a certain stroke front or rate of rise will occur are defined by Equations 3 and 4 from the 1982 *Transmission Line Reference Book.*

$$P(dI/dt) = \frac{1}{1 + \left(\frac{dI/dT}{24}\right)^4} \quad (3)$$

where

P(dl/dt) = probability that a specified value of dl/dt will be exceeded, and
dl/dt = specified current rise time in kiloamperes per microsecond (kA/ms).

The probabilities that a certain peak current will occur in any stroke are defined by the following equation:

$$P(I) = \frac{1}{1 + \left(\frac{I}{31}\right)^{2.6}} \quad (4)$$

where

P(I) = probability that the peak current in anystroke will exceed I, and
I = specified crest current in kiloamperes(kA).

Figure 7 is e plot of Equation 4 and Figure 8 is a plot of the probability that a stroke will be within the ranges shown on the abscissa.

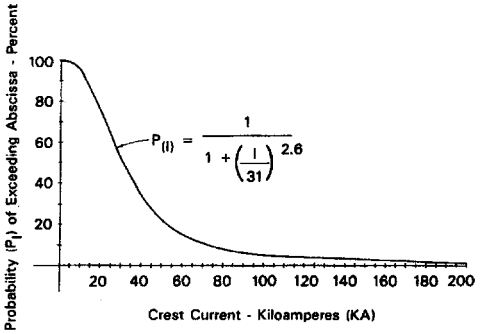

Figure 7 —PROBABILITY OF STROKE CURRENT EXCEEDING ABSCISSA

ISOKERAUNIC LEVEL

Isokeraunic level is the average number of clays per year on which thunder will be heard during a 24-hour period. If thunder is heard more then one time on any one day, the day is still classified as one thunder—day. The US Weather Bureau now keeps hourly weather records, and data will be available ultimately on e thunderstorm-hour basis.

The average annual isokeraunic level for locations in the United States can be determined by referring to isokeraunic maps, on which lines of constant keraunic level are plotted similar to the altitude contour lines on a topographic map. Figure 9 is such a map of the United States showing the average annual thunderstorm activity across the USA.

Copyright © 1996 IEEE All Rights Reserved

Copyright The Institute of Electrical and Electronics Engineers, Inc.
Provided by IHS under license with IEEE
No reproduction or networking permitted without license from IHS Not for Resale

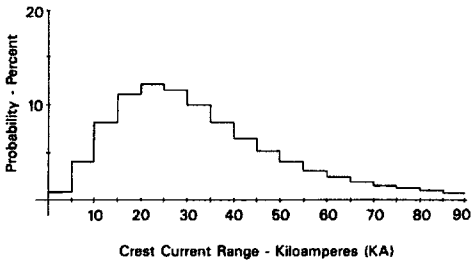

Figure 8 —STROKE CURRRENT RANGE PROBABILITY

GROUND FLASH DENSITY

Ground flash density (GFD) is the average number of strokes per unit area per year at any location of interest. It is usually assumed that the GFD to earth, a substation, or a transmission or distribution line is roughly proportional to the isokeraunic level at the locality. Table 1 lists equations for GFD developed by various researchers at different locations around the world. Most researchers have arrived at a proportional relationship ranging from 0.1 T to 0.19 T ground flashes per square kilometer per year, where T is the average annual isokeraunic level. For design of electric power facilities, the following equations, again from the 1982 *Transmission Line Reference Book,* are suggested:

$$N = 0.12\ T \tag{5}$$

or

$$N_m = 0.31\ T \tag{6}$$

where

N = number of flashes to earth per square kilometer per year,
N_m = number of flashes to earth per square mile per year, and
T = average annual isokeraunic level.

Copyright © 1996 IEEE All Rights Reserved

Copyright The Institute of Electrical and Electronics Engineers, Inc.
Provided by IHS under license with IEEE
No reproduction or networking permitted without license from IHS Not for Resale

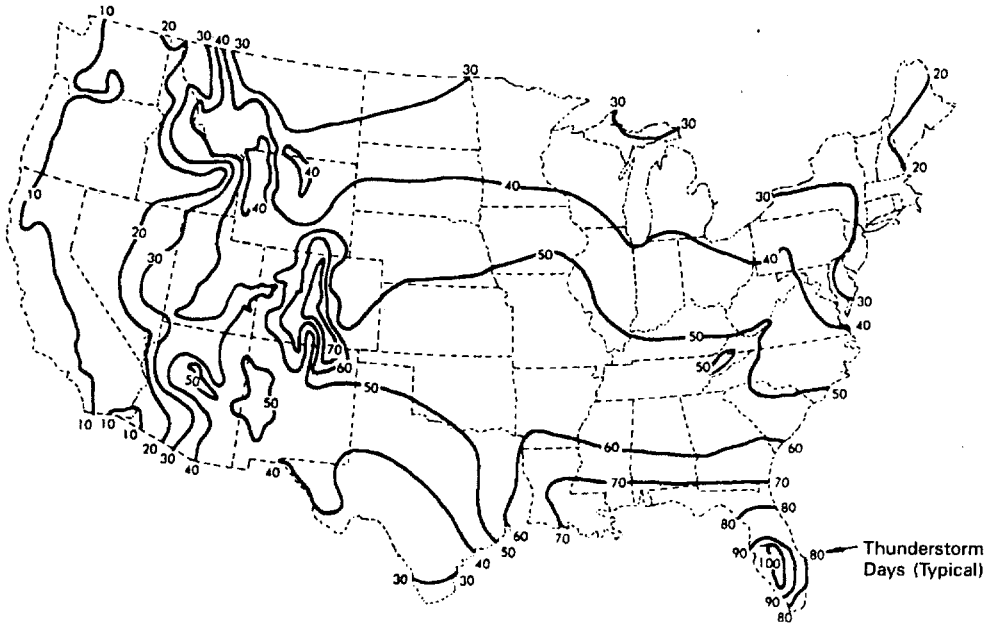

Source: *Transmission Line Reference Book, 345 kV and Above,* Second Edition, Electric Power Resource Institute, Palo Alto, California, 1982.

Figure 9 —USA ANNUAL ISOKERAUNIC MAP

Table 1 —EMPIRICAL RELATIONSHIPS BETWEEN LIGHTNING GROUND-FLASH DENSITY AND ANNUAL THUNDER-DAYS (T)

Location	Ground Flesh Density	Researcher
	$km^{-2}\ yr^{-1}$	
India	0.1T	Aliya (1968)
Rhodesia	0.14T	Anderson and Jenner (1954)
South Africa	$0.023T^{1.3}$	Anderson/Eriksson (1981)
Sweden	$0.004T^{2}$ (approx)	Muller-Hillebrand (1964)
UK	aT^{b} [$a=2.6\pm0.2\times10^{-3}$; $b=1.9\pm0.1$]	Stringfellow (1974)
USA (North)	0.11T	Horn and Ramsey (1961)
USA (South)	0.17T	Horn and Ramsey (1961)
USA	0.1T	Anderson and others (1968)
USA	0.15T	Brown and Whitehead (1968)
USSR	$0.036T^{1.3}$	Kolokolov and Pavlova (1972)
World (temperate climate)	0.19T	Brooks (1960)
World (temperate climate)	0.15T	Golds (1966)
World (tropical climate)	0.13T	Brooks (1960)

Source: Anderson, J. G. et al., *Transmission Line Reference Book — 345 kV and Above,* Palo Alto, California. Electric Power Research Institute, 1982.

Copyright © 1996 IEEE All Rights Reserved

Copyright The Institute of Electrical and Electronics Engineers, Inc.
Provided by IHS under license with IEEE
No reproduction or networking permitted without license from IHS
Not for Resale

BASIC INSULATION LEVEL (BIL)

Basic insulation level is a term used to define the ability of electrical equipment to withstand current and voltage surges. To understand the concept of BIL ratings, it is first necessary to analyze the phenomena of a traveling current wave on an electrical line and the voltage wave that results.

TRAVELING WAVE

Earlier this paper presented a discussion of the formation of a lightning current stroke which propagates toward earth. This lightning stroke strikes the first object within its strike distance (see Equation 1). When the object struck is a transmission or distribution line, the current wave propagates in two directions, as shown on Figure 10.

A line exhibits an impedance to the flow of lightning stroke current. This impedance is called “surge impedance.” Typical values of surge impedance range from 50 ohms for underground lines to 500 ohms for a single overhead wire with ground return. Formulas to calculate surge impedance include many factors, such as conductor bundling, corona, and distances to other conductors and shield wires. Specific formulas for line surge impedances for various line types and configurations can be found in the references.

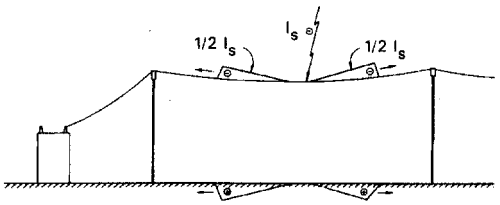

Figure 10 —LIGHTNING STROKE TO POWER LINE

As a lightning current wave flows through a line, a voltage wave is developed. This voltage wave impresses a potential difference between the line and ground, which is calculated as follows:

$$E_S = 1/2\ I_S\ (Z_S) \tag{7}$$

where

E_s = the voltage wave, kilovolts (kV),
I_s = the lightning surge current, kiloamperes (kA), and
Z_s = the line surge impedance, ohms.

The voltage wave travels along the electric power line at the velocity of light. If the flashover capability of an insulator is less than the magnitude of the surge voltage, the insulator will flashover. If the insulators are able to withstand the voltage stress without flashover, the surge voltage wave continues to travel the line, until it reaches the end of the line which may be an open switch, an open underground cable elbow, or a connection to a transformer. The surge impedance of a transformer is very large, and therefore a transformer appears as en open circuit to traveling surge waves. At the end of line, a surge wave has no place to go so it is reflected and travels back along the line. At the point of reflection, the voltage stress essentially doubles as the wave returns. If transformers or insulators located at these end-of-line locations are to remain undamaged, their insulation strength or BIL must be high enough to withstand this doubling of voltage wave.

Figure 11 depicts this situation in which a traveling voltage wave is reflected at an open point in the line. In Quadrant A of the figure, the voltage wave is shown traveling in the direction of the arrow just prior to reaching the open point. Quadrant B of the figure shows the leading edge of the wave reflected and the wave returning toward its original

Copyright © 1996 IEEE All Rights Reserved

Copyright The Institute of Electrical and Electronics Engineers, Inc.
Provided by IHS under license with IEEE
No reproduction or networking permitted without license from IHS Not for Resale

direction. The actual voltage wave being experienced is the sum of the forward moving end reflected wave shown by the solid black line. In Quadrant C of the figure, the peak of the wave is reflected and the voltage at the reflection point is twice the peak value of the original wave. This is the highest voltage stress situation. Quadrant D is a final depiction of the voltage wave with the major portion of the wave reflected. As before, the solid black line represents the actual wave at that point.

EQUIPMENT RATINGS

Formal equipment insulation testing was initiated during the 1930s by a Joint Committee on Insulation Coordination, composed of the American Institute of Electrical Engineers (AIEE), Edison Electric Institute (EEI), and the National Electrical Manufacturers Association (NEMA). Today's industry standard for specifying BIL for the different voltage classifications is the result of years of equipment insulation testing within the industry. The BIL reference voltage is defined as the highest surge voltage that the equipment insulation can withstand without failure or disruptive discharge. Equipment insulation is required to satisfy industry standardized tests to demonstrate an insulation level equal to or greater than the BIL specified for each voltage insulation class.

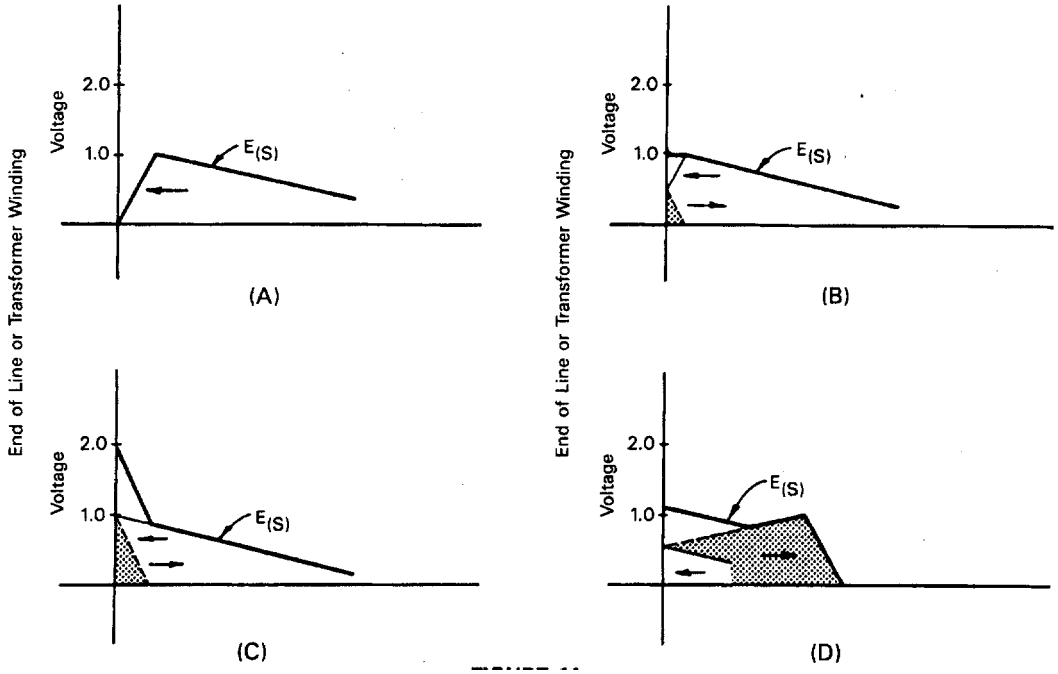

Figure 11 —TRAVELING SURGE VOLTAGE WAVE

As impulse testing progressed over the years, a standard insulation testing procedure was developed. The "standard" full-wave lightning impulse waveform specified by the American National Standards Institute (ANSI) and the Institute of Electrical and Electronic Engineers (IEEE) to be used by equipment manufacturers for insulation testing would simulate traveling waves coming into the station over the transmission lines. The full-wave impulse waveform is defined as a waveform that rises to the crest voltage in 1.2 microseconds and drops to 50 percent of crest voltage in 50 microseconds, with both times measured from the same origin and in accordance with established standards of impulse testing techniques. A typical impulse wave shape is illustrated on Figure 12.

Copyright © 1996 IEEE All Rights Reserved

Copyright The Institute of Electrical and Electronics Engineers, Inc.
Provided by IHS under license with IEEE
No reproduction or networking permitted without license from IHS
Not for Resale

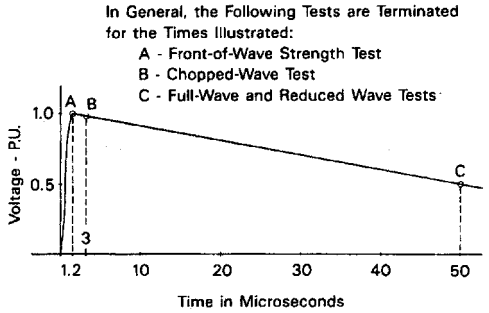

Figure 12 —TYPICAL IMPULSE TEST WAVESHAPE

As the practice of insulation tasting has progressed, the following variations of the standard lightning impulse test have evolved:

- Reduced Full-Wave Test—The reduced full wave normally has a crest voltage between 50 and 70 percent of the full-wave voltage.
- Chopped-Wave Test—The voltage impulse test is terminated after the maximum crest of the impulse wave form with a specified minimum crest voltage. This test demonstrates insulation strength against a wave traveling along the transmission line after flashing over an insulator some distance away.
- Front-of-Wave Test—The voltage impulse test is terminated during the rising front of the voltage wave with a specified minimum crest voltage.

A complete set of lightning impulse tests for power end distribution transformers would include the following sequence of impulse waves:

1) One reduced full-wave test.
2) Two front-of-wave tests.
3) Two chopped-wave tests.
4) One full-wave test.

Table 2 identifies the relationship between standard system voltages and the corresponding typical BILs. A natural question is “At what impulse current or voltage level should a lightning stroke be considered damaging or dangerous?” The capabilities of electrical equipment end lines to withstand direct lightning strokes are indicated by the BILs of the particular equipment and components. Stroke currents and voltages less than the protective insulation level are permitted to flow past lines or equipment. System insulation coordination considers the insulation of lines, as well as the connected equipment insulation. The electrical equipment may have e lower BIL rating, so it would need surge arrester protection even though the line design could be considered to have essentially complete protection from lightning.

The BIL of a piece of equipment dictates the stroke current limits of that equipment. The relationship between BIL and a prospective lightning stroke current is represented mathematically as follows:

$$I_S = \frac{2.0\ (BIL)}{Z_S} \tag{8}$$

where

I_s = prospective stroke current, kA,
BIL = basic lightning impulse insulation level of equipment to be protected, kV, and

Copyright © 1996 IEEE All Rights Reserved

Copyright The Institute of Electrical and Electronics Engineers, Inc.
Provided by IHS under license with IEEE
No reproduction or networking permitted without license from IHS
Not for Resale

Z_s = the surge impedance of a conductor which averages 300 ohms for e vertical wire remote from earth, [Selecting a Z_s of 400 ohms (suitable for a phase conductor in the vicinity of ground wire) would decrease the current values by 33 percent.]

Taking Z_s as 300 ohms yields the following values of stroke currents that correspond to typical classes of BIL shown in Table 3.

Table 3 —STROKE CURRENT MAGNITUDE FOR VARIOUS CLASSES OF BIL

BIL Class	Stroke Current Magnitude I_s
kV	**kA**
110	0.73
150	1.00
200	1.33
250	1.67
350	2.33
550	3.67
650	4.33
750	5.00
900	6.00
1,050	7.00
1,300	8.67
1,400	9.33

CLASSICAL DIRECT STROKE PROTECTION

It is standard practice to attempt to shield substations and switchyards from direct lightning strokes.

Copyright © 1996 IEEE All Rights Reserved

Copyright The Institute of Electrical and Electronics Engineers, Inc.
Provided by IHS under license with IEEE
No reproduction or networking permitted without license from IHS Not for Resale

Table 2 —RELATIONSHIPS OF NOMINAL SYSTEM VOLTAGE TO MAXIMUM SYSTEM VOLTAGE AND BASIC LIGHTNING IMPULSE INSULATION LEVELS (BILs) FOR SYSTEM 1,100 kV AND BELOW

Application	Nominal SystemVoltage kV rms	Maximum SystemVoltage* kV rms	Basic Lightning Impulse Insulation Levels in Common Use kV crest
Distribution	1.2		30
	2.5		45
	5.0		60
	8.7		75
	15.0		95
	25.0		150, 125
	34.5		200, 150, 125
	46.0	48.3	250, 200
	69.0	72.5	350, 250
Power	1.2		45, 30
	2.5		60, 45
	5.0		75, 60
	8.7		95, 75
	15.0		110, 95
	25.0		150
	34.5		200
	46.0	48.3	250, 200
	69.0	72.5	350, 250
	115.0	121.0	550, 450, 350
	138.0	145.0	650, 550, 450
	161.0	169.0	750, 650, 650
	230.0	242.0	1,050, 900, 825, 750, 650
	345.0	362.0	1,175, 1,050, 900, 825
	500.0	550.0	1,675, 1,550, 1,425, 1,300
	765.0	800.0	2,050, 1,925, 1,800
	1,100.0	1,200.0	2,425, 2,300, 2,175, 2,050

*From ANSI C84.1-1977 and ANSI C92.2-1978

The method of shielding used has typically consisted of installing grounded shield wires over equipment, shielding masts near equipment, or a combination of the two. From studies performed by several electrical equipment manufacturers about 50 years ago, it was established that a grounded conductor or shielding structure casts or projects an electrical “shadow” on the ground plane below it. Based on studies performed by Westinghouse using scale models, a relationship was developed for various heights of the shielding structures above protected objects as a function of the horizontal separation and height of the protected objects. This method of shielding protection is commonly referred to as the “Wagner Method” and has been used by substation engineers for many years.

Copyright © 1996 IEEE All Rights Reserved

Copyright The Institute of Electrical and Electronics Engineers, Inc.
Provided by IHS under license with IEEE
No reproduction or networking permitted without license from IHS Not for Resale

Similarly, other methods of shielding protection have been based on the use of shield electrodes which provided a linear-sided circular cone of protection with specific angles of the cone based on empirical data. Some 200 years ago, Benjamin Franklin observed that a 58-degree cone from a vertical air terminal would provide suitable shielding protection. The specific angle to be used in this method has decreased over the years to the generally accepted "30-degree angle of protection." The decrease in angle or zone of protection may be a result of recognizing the failure of earlier criteria, according to Ralph H. Lee in the IEEE *Transactions on Industrial Applications*.

Both the Wagner Method and the Cone Method have notable disadvantages. Neither accurately predicts shielding provided by shielding structures over 90 feet high, nor account for other nearby grounded and insulated conductors. As an example, the Empire State Building receives on the average 23 direct lightning strokes per year. The 30-degree angle linear cone would indicate that all lower structures within the 30-degree angle of protection are shielded by the taller building. What the method does not explain is why the lower structures well within the zone of protection have sustained direct strokes or why these tall structures also receive direct strokes below their tops (side strokes). Lee also states in another source that it is such reports which have reduced the credibility of the lightning protection capability of higher objects in terms of the linear cone principle.

ELECTROGEOMETRICAL MODEL

Shielding systems developed using classical methods of determining the necessary shielding for direct stroke protection of substations have historically provided a fair degree of protection. However, designers were somewhat at a loss when asked to quantify their designs. They could not answer such questions as "What is the probability of failure of the designed shielding system?" or "How many years should the substation statistically operate before a shielding failure occurs?" or "Is the system overdesigned? underdesigned?" As transmission voltages increased to the 345 kV levels and above, and as transmission structure heights increased accordingly, transmission line designers became increasingly aware of two important facts:

- Classical shielding angles which had previously been used in the design of lower voltage transmission lines, and consequently lower height structures, would not provide the stroke protection expected for the higher voltage lines.
- The impact of an EHV transmission line tripout because of lightning was very severe. The severity was measured both in cost and in unacceptable system performance without the transmission line.

These problems prompted new investigations and studies into the nature of a lightning stroke, and into ways of modeling a transmission line so that the designer could quantify the expected performance of the design. One extremely significant research project was Edison Electric Institute (EEI) Research Project RP 50, publication 72-900, published February 16, 1971. Performed by E. R. Whitehead, the project included a theoretical model of a transmission system subject to direct strokes, development of analytical expressions of performance of the line, and supporting field data which verified the theoretical model and analyses. The model of the system is referred to as the electrogeometrical model.

Recently, the electrogeometrical model has been carried a step further end applied to the protection of building structures and electric substations. Much of the conceptual work in this area has been performed by Ralph H. Lee, who has developed the "rolling sphere" technique, a simplified technique of applying the electrogeometric theory to buildings and electric substations.

PROTECTION AGAINST STROKE CURRENT I_s

The electrogeometrical model capitalizes on the fact that electric power equipment, because of its BIL rating, is designed to adequately handle some lightning surge current. This magnitude of stroke current, Is, can be calculated using Equation 8 or Table 2. The stroke distance for a stroke current I_s can be determined from Equation 1 or Figure 3.

Figures 13 and 14 show the geometrical model of a substation shield mast, the ground plane, the strike distance, and the zone of protection. The figures also show a line parallel to, and a distance S above, the ground plane. It also shows

Copyright © 1996 IEEE All Rights Reserved

Copyright The Institute of Electrical and Electronics Engineers, Inc.
Provided by IHS under license with IEEE
No reproduction or networking permitted without license from IHS Not for Resale

an arc of radius S which touches the mast and has its center on the line a distance S above the ground plane. This arc describes the points at which the shield mast provides protection against the stroke current I_s. The zone below the arc is the protected zone for stroke current I_s. Step leaders which result in stroke current I_s and which descend outside the point where the arc is tangent to the ground will strike the ground by virtue of the stroke distance S. Step leaders which result in stroke current I_s and which descend inside the point where the arc is tangent to the ground will strike the shield mast, provided all other objects are within the protected zone.

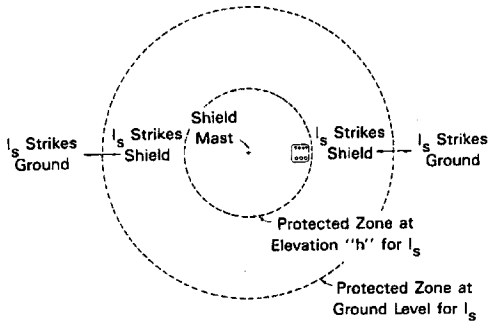

Figure 13 —SHIELD MAST PROTECTION FOR STROKE CURRENT I_s (ELEVATION VIEW)

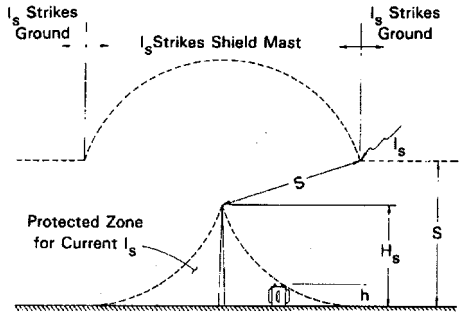

Figure 14 —SHIELD MAST PROTECTION FOR STROKE CURRENT I_s (ELEVATION VIEW)

The greatest height of shield mast which will provide protection for stroke currents equal to I_s is S. Increasing the shield height from H_s to the maximum height provides only e small increase in the zone of protection. The protection zone can be visualized as the surface of a sphere with radius S which is rolled toward the mast until touching the mast. As the sphere is rolled around the mast, it defines e three-dimensional surface of protection. It is this concept which has led to the name "rolling sphere" for simplified applications of the electrogeometrical model. This concept is discussed further in the last section of this paper.

PROTECTION AGAINST STROKE CURRENTS GREATER THAN I_s

The previous section of this paper demonstrated the protection provided for a stroke current I_s. A lightning stroke current, however, has an infinite number of possible magnitudes. Thus, will the system provide protection at other levels of stroke current magnitude? Consider a stroke current I_{s1} with magnitude greater than I_s. Strike distance, determined from Equation 1, is S_1. The geometrical model for this condition is shown on Figure 15. The figure shows both arcs of protection for stroke current I_{s1} and for the previously discussed I_s. The figure shows that the zone of protection provided by the mast for stroke current I_{s1} is GREATER than the zone of protection provided by the mast for stroke current I_s. Step leaders which result in stroke current I_{s1} and which descend outside the point where the arc is tangent to the ground will strike the ground. Step leaders which result in stroke current I_{s1} and which descend inside the point where the arc is tangent to the ground will strike the shield mast, provided all other objects are within the S_1 protected zone. Again, the protective zone can be visualized as the surface of a sphere touching the mast. In this case, the sphere has a radius S_1.

Copyright © 1996 IEEE All Rights Reserved

Copyright The Institute of Electrical and Electronics Engineers, Inc.
Provided by IHS under license with IEEE
No reproduction or networking permitted without license from IHS
Not for Resale

PROTECTION AGAINST STROKE CURRENTS LESS THAN I_s

It has been shown that a shielding system which provides protection at the stroke current level Is provides even better protection for larger stroke currents. A question which arises now is "Will stroke currents less than I_s penetrate the shield system and strike equipment?" To answer this question, consider a stroke current Iso with magnitude less

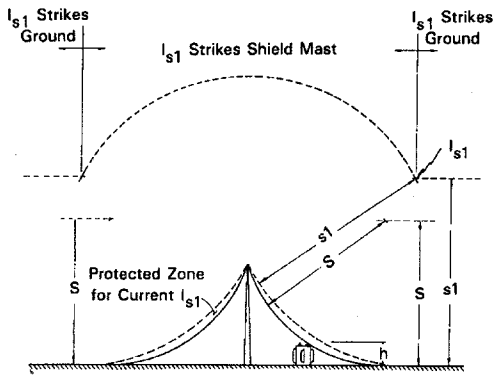

Figure 15 —SHIELD PROTECTION MAST PROTECTION FOR STROKE CURRENT I_{s1} (ELEVATION VIEW)

than I_s. Strike distance, determined from Equation 1, is S_o. Figures 16 and 17 show the geometrical model for this condition and shows arcs of protection for both stroke current I_{so} and for I_s. The figure shows that the zone of protection provided by the mast for stroke current Iso is less than the zone of protection provided by the mast for stroke current I_s. A portion of the equipment protrudes above the dashed arc or zone of protection for stroke current I_{so}. Step leaders which result in stroke current I_{so} end which descend outside of the point where the arc is tangent to the ground will strike the ground. However, some step leaders which result in stroke current I_{so} and which descend inside the point where the arc is tangent to the ground could strike the equipment. This is best shown in the plan view of protective zones shown on Figure 16. Step leaders for stroke current I_{so} which descend inside the indicated protective zone for equipment which is "h" in height will strike the mast. Step leaders for stroke current I_{so} which descend inside the cross-hatched area will strike equipment which is "h" in height in the area. If, however, the value of I_s was selected based on the BIL level of equipment used in the substation, stroke current I_{so} should cause no damage to equipment.

FAILURE PROBABILITY

For the three conditions described previously in this paper, there should theoretically be no equipment failures resulting from direct strokes. This is because only those strokes which could produce a surge voltage wave less than the BIL of the equipment were able to penetrate the shielding system and these strokes should, therefore, cause no problem. Unfortunately, substation shielding which would provide such ideal protection is not always economically practical. This is especially true with substation equipment BIL levels below 550 kV, which is always the case with distribution substations. The designer is then faced with the problem of first determining the level of failure risk he is willing to base the design on, then developing a design which will meet this criteria. The following information further discusses the unprotected area of a design, and application of calculations to determine expected failure rates.

Copyright © 1996 IEEE All Rights Reserved

Copyright The Institute of Electrical and Electronics Engineers, Inc.
Provided by IHS under license with IEEE
No reproduction or networking permitted without license from IHS
Not for Resale

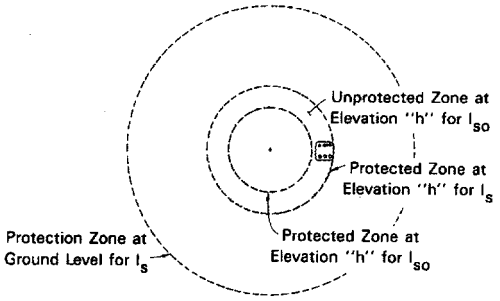

Figure 16 —SHIELD MAST PROTECTION FOR STROKE CURRENT I_{so} (PLAN VIEW)

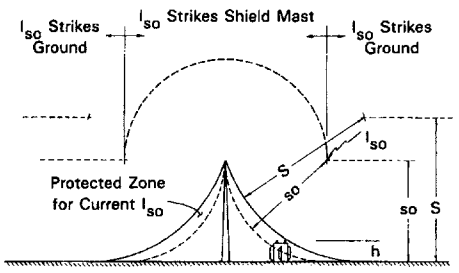

Figure 17 —SHIELD MAST PROTECTION FOR STROKE CURRENT I_{so} (ELEVATION VIEW)

UNPROTECTED AREA

Figure 16 can be used to visualize an unprotected area, assuming that equipment is sized and located as shown, and that, based on equipment BIL levels, equipment can withstand stroke currents less than I_{so}. The associated strike distance is S_o. Based on the layout, the shield mast will provide protection for all stroke currents greater than I_s. However, those stroke current magnitudes between I_{so} and I_s could reach equipment and would be expected to cause damage. The unprotected area for this condition would be the cross-hatched area shown on Figure 16.

PROBABILITY OF STROKES CAUSING EQUIPMENT DAMAGE

Equation 4 of Figure 7 can be used to determine the probability that any stroke will be greater than I_s, which is the level above which the shield masts will intercept the stroke. This probability is $P(I_s)$. The same equation and/or figure can be used to determine the probability that the stroke will be greater than I_{so}, where I_{so} is the level of stroke current which can be handled by the equipment based on its BIL. This probability is $P(I_{so})$. Probability that a stroke is less than I_s, is 1.0 minus $P(I_s)$ or $P(< I_s)$. Probability that a stroke is less than I_{s0} is 1.0 minus $P(I_{so})$ or $P(< I_{so})$. For all lightning strokes which descend upon the cross-hatched area of Figure 16, the probability that equipment damage will occur is $P(< I_s) - P(< I_{so})$.

These probabilities can best be demonstrated by the following example:

- Assuming the equipment BIL is 550 kV, the allowable stroke current is 3.87 kA, (Table 3)
- Assuming the strike distance S, above which protection is provided, is 60 meters, the stroke current above which protection is provided is 15.88 KA. (Equation 2)
- Using Equation 4 or Figure 7, the probability that a stroke will exceed 3.67 kA is 0.996.
- Using Equation 4 or Figure 7, the probability that a stroke will be less then 3.67 kA is 1.0–0.996 = 0.004.
- Using Equation 4 or Figure 7, the probability that a stroke will exceed 15.88 kA is 0.851.
- Using Equation 4 or Figure 7, the probability that a stroke will be less than 15,88 kA is 1.0–0.851 = 0.149.

Copyright © 1996 IEEE All Rights Reserved

Copyright The Institute of Electrical and Electronics Engineers, Inc.
Provided by IHS under license with IEEE
No reproduction or networking permitted without license from IHS
Not for Resale

- Resulting in the probability that a stroke which descends upon the unprotected area will cause equipment damage and failure is 0.149–0.004 = 0.145 or 14.5 percent.

FAILURE RATE

The substation designer is basically concerned with the rate of failure of the shielding design, or the number of years expected between failures. In the previous section of this paper, the methodology was presented for determining the probability that a stroke in the unprotected area would cause failure. By knowing the number of strokes expected to descend upon the area, the failure rate can be easily determined.

The number of strokes expected in the general area of the substation is the ground flash density (GFD). GFD is calculated using Equation 5. The number of strokes expected to descend upon the area is then the GFD times the unprotected area. Finally, the annual failure rate is the product of the number of strokes to the area times the probability that the stroke in the area will cause failure.

The calculation of failure rate can best be demonstrated by continuing the example begun in the previous section.

- Assuming the outside radius of the unprotected area is 35 meters and that the inside radius of the unprotected area is 22 meters, the unprotected area is π [$(35^2–22^2)$] = 2,328 square meters or 2.328×10^{-3} square kilometers.
- Assuming the isokeraunic level is 50 TSD (values across the USA can be read from Figure 9), the GFD (Equation 5) is 6.0 strokes per square kilometer.
- The annual number of strokes expected to descend into the unprotected area is $6.0 \times 2.328 \times 10^{-3} = 0.01397$ strokes/year.
- Using the 0.145 probability developed in the previous section, the annual expected number of equipment failures due to direct lightning strokes is 0.01397 × 0.145 = 0.00203 failures/year or 494 years per failure.

The above calculated failure rate would be for the simplified single mast substation described in the example. If a utility had 20 such substations of identical design scattered throughout its system, the total system substation failure rate due to direct strokes would be 494 ÷ E 20 = 24.7 years per failure.

Typically, substation designers consider a total system failure rate in this order of magnitude as acceptable.

MULTIPLE SHIELDING ELECTRODES

The electrogeometric modeling concept of direct stroke protection has been demonstrated for a single shield mast. The concept can be applied to one, or a group, of horizontal shield wires, as well as multiple shield masts. Figure 18 shows this application considering two masts in a multiple

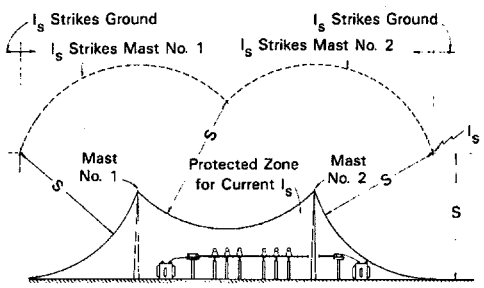

Figure 18 —MULTIPLE SHIELD MAST PROTECTION FOR STROKE CURRENT I_s

Copyright © 1996 IEEE All Rights Reserved

Copyright The Institute of Electrical and Electronics Engineers, Inc.
Provided by IHS under license with IEEE
No reproduction or networking permitted without license from IHS
Not for Resale

shield mast system. The arc of protection for stroke current I_s is shown for each mast. The dashed arcs represent those points at which a descending step leader for stroke current I_s will be attracted to either Mast No. 1 or Mast No. 2. The protected zone between the masts is defined by an arc of radius S with the center at the intersection of the two dashed arcs. The protective zone can again be visualized as the surface of e sphere with radius S which is rolled toward a mast until touching the mast, then rolled up and over the mast such that it would be supported by the two masts. The dashed lines would be the locus of the center of the sphere as it is rolled across the substation surface. Using the concept of a rolling sphere of the proper radius, the protected area of an entire substation can be determined. This can be applied to any group of different height shield masts, shield wires, or combination of the two.

CONCLUSION

This paper has assimilated technical information from several sources to develop an analytical method for design of direct stroke protection of substation equipment. Using the information provided in this paper, a designer can "quantity" the statistical failure rates of various designs, and can make design and economic decisions based on this information. The information shown in this paper will, to a degree, be incorporated into the new IEEE design guide for direct stroke protection of substations.

BIBLIOGRAPHY

Anderson, J. G., et el., *Transmission Line Reference Book—345 kV and Above,* Palo Alto, California, Electric Power Research Institute, 1982.

Anderson, J. G., et el., *Transmission Line Reference Book—345 kV and Above,* Palo Alto, California, Electric Power Research Institute, 1975.

Cianos, N., and E. T. Pierce, "A Ground-Lightning Environment for Engineering Usage," Stanford Research Institute, Technical Report 1, August 1972.

Fink, D. B., and H. W. Beaty, *Standard Handbook for Electrical Engineers,* Eleventh Ed., New York, McGraw-Hill, 1978.

"General Requirements for Liquid-immersed Distribution, Power, and Regulating Transformers," American National Standards Institute, ANSI/IEEE C57.12, New York, 1980.

Gilman, D. W., and E. R. Whitehead, "The Mechanism of Lightning Flashover on High Voltage and Extra-High Voltage Transmission Lines" *Electra,* No. 27, March 1973, pp. 65–96.

"IEEE Standard for Surge Arresters for AC Power Circuits," American National Standards Institute, ANSI/IEEE C62.1, New York, 1981.

Lee, R. H., "Lightning Protection of Buildings," *IEEE Transactions on Industrial Applications,* Vol. 1A-15, No. 3, May/June 1979, pp. 236–240.

Lee, R. H., "Protection Zone for Buildings Against Lightning Strokes Using Transmission Line Protection Practice," IEEE Industrial & Commercial Power Systems Conference, May 1977.

Lee, R. H., "Protect Your Plant Against Lightning," *Instruments and Control Systems,* February 1982, pp. 31–34.

Linck, H., "Shielding of Modern Substations Against Direct Lightning Strokes," *IEEE Transactions*, Vol. PAS-94, No. 5, September/October 1975, pp. 1674–1679.

"Power Systems—Insulation Coordination," American National Standards Institute, ANSI C92.1-1982, New York, 1982.

 Copyright © 1996 IEEE All Rights Reserved

Copyright The Institute of Electrical and Electronics Engineers, Inc.
Provided by IHS under license with IEEE
No reproduction or networking permitted without license from IHS Not for Resale

"Techniques for Dielectric Tests," American National Standards Institute, ANSI C68.1, New York, 1968.

Wagner, C. F., et al., *Electrical Transmission and Distribution Reference Book*, Fourth Ed., Westinghouse Electric Corp., 1964.

Wagner, C. F., G. D. McCann, and C. M. Lear, "Shielding of Substations," *AIEE Transactions*, Vol. 61, February 1942, pp. 96–99.

Whitehead, E. R., "Mechanism of Lightning Flashover," EEI Research Project RP 50, Pub. 72-900, Illinois Institute of Technology, February 1971.

ACKNOWLEDGEMENT

The technical content in this paper has resulted from research of numerous literature resources on the subject of lightning and lighting protection. The significant articles and texts used to develop this paper are listed in the bibliography of this paper. The author of this paper would like to acknowledge the research and work performed by those individuals responsible for the literature in the bibiliography.

The author also acknowledges his follow members of the IEEE Transmission Substation Working Group E-5. This working group is preSently developing a new guide for direct stroke protection of substations. Much of the work presented in this paper is currently being adapted for use in the new guide.

Copyright © 1996 IEEE All Rights Reserved

--`,,`-`-`,,`,,`,`,,`---
Copyright The Institute of Electrical and Electronics Engineers, Inc.
Provided by IHS under license with IEEE
No reproduction or networking permitted without license from IHS
Not for Resale