Recognized as an
American National Standard (ANSI)

IEEE Std 980-1994(R2001)
(Revision of IEEE Std 980-1987)

IEEE Guide for Containment and Control of Oil Spills in Substations

Sponsor

Substations Committee
of the
IEEE Power Engineering Society

Approved September 22, 1994

IEEE Standards Board

Reaffirmed March 17, 2001

IEEE-SA Standards Board

Abstract: *The significance of oil-spillage regulations and their applicability to electric supply substations are discussed; the sources of oil spills are identified; typical designs and methods for dealing with oil containment and control of oil spills are discussed; and guidelines for preparation of a typical Spill Prevention Control and Countermeasures (SPCC) plan are provided. This guide excludes polychlorinated biphenyl (PCB) handling and disposal considerations.*
Keywords: *collecting pit, oil-containment methods, oil-containment system, oil discharge, oil spill, primary oil containment, retention pit, secondary oil containment, spill prevention control and countermeasures (SPCC) plan*

The Institute of Electrical and Electronics Engineers, Inc.
345 East 47th Street, New York, NY 10017-2394, USA

Copyright © 1993 by the Institute of Electrical and Electronics Engineers, Inc.
All rights reserved. Published 1993. Printed in the United States of America

ISBN 1-55937-459-4

No part of this publication may be reproduced in any form, in an electronic retrieval system or otherwise, without the prior written permission of the publisher.

--`,,`-`-`,,`,,`,`,,`---

Copyright The Institute of Electrical and Electronics Engineers, Inc.
Provided by IHS under license with IEEE
No reproduction or networking permitted without license from IHS

Not for Resale

IEEE Standards documents are developed within the Technical Committees of the IEEE Societies and the Standards Coordinating Committees of the IEEE Standards Board. Members of the committees serve voluntarily and without compensation. They are not necessarily members of the Institute. The standards developed within IEEE represent a consensus of the broad expertise on the subject within the Institute as well as those activities outside of IEEE that have expressed an interest in participating in the development of the standard.

Use of an IEEE Standard is wholly voluntary. The existence of an IEEE Standard does not imply that there are no other ways to produce, test, measure, purchase, market, or provide other goods and services related to the scope of the IEEE Standard. Furthermore, the viewpoint expressed at the time a standard is approved and issued is subject to change brought about through developments in the state of the art and comments received from users of the standard. Every IEEE Standard is subjected to review at least every five years for revision or reaffirmation. When a document is more than five years old and has not been reaffirmed, it is reasonable to conclude that its contents, although still of some value, do not wholly reflect the present state of the art. Users are cautioned to check to determine that they have the latest edition of any IEEE Standard.

Comments for revision of IEEE Standards are welcome from any interested party, regardless of membership affiliation with IEEE. Suggestions for changes in documents should be in the form of a proposed change of text, together with appropriate supporting comments.

Interpretations: Occasionally questions may arise regarding the meaning of portions of standards as they relate to specific applications. When the need for interpretations is brought to the attention of IEEE, the Institute will initiate action to prepare appropriate responses. Since IEEE Standards represent a consensus of all concerned interests, it is important to ensure that any interpretation has also received the concurrence of a balance of interests. For this reason IEEE and the members of its technical committees are not able to provide an instant response to interpretation requests except in those cases where the matter has previously received formal consideration.

Comments on standards and requests for interpretations should be addressed to:

Secretary, IEEE Standards Board
445 Hoes Lane
P.O. Box 1331
Piscataway, NJ 08855-1331
USA

IEEE standards documents may involve the use of patented technology. Their approval by the Institute of Electrical and Electronics Engineers does not mean that using such technology for the purpose of conforming to such standards is authorized by the patent owner. It is the obligation of the user of such technology to obtain all necessary permissions.

Copyright The Institute of Electrical and Electronics Engineers, Inc.
Provided by IHS under license with IEEE
No reproduction or networking permitted without license from IHS
Not for Resale

Introduction

(This introduction is not a part of IEEE Std 980-1994, IEEE Guide for Containment and Control of Oil Spills in Substations.)

On December 31, 1973, the United States government published in its Code of Federal Regulations, under Title 40 Protection of the Environment, the federal requirements for the preparation and implementation of Spill Prevention Control and Countermeasure (SPCC) plans applicable to the discharge of oil at electrical facilities. While these regulations, in the strictest sense, relate to oil spills into navigable waters from shore facilities, it should be realized that these regulations could very easily be, and in some states are, extended to cover onshore areas. Onshore areas could be a distance away from navigable waters and could include those areas where substations are installed.

It is prudent, therefore, to recognize that there exists a potential for oil spills in almost every substation throughout the utility industry. It is consequently reasonable to identify the extent of the problem, if any, and to recommend plausible measures to control oil spills by means of an IEEE guide.

This guide was revised by members of Working Group G2—Design and Location of Substations for Community Acceptance—and is under the sponsorship of the Substations Environmental Subcommittee of the IEEE Power Engineering Society (PES) Substations Committee.

The members of the Working Group who participated in the revision of this guide were as follows:

Richard G. Cottrell, *Chair*

Michael J. Bio
James C. Burke
W. Bruce Dietzman
Lenard N. Ferguson
Charles R. Gambrell
David L. Harris
Jim Hogan
Don Hutchinson
Tibor I. Kertesz
Frederick F. Kluge
David S. Lehman
Frank Logan
Abel Parra
Anne M. Sahazizian
Richard J. Standford
Raymond L. Stoudt

The following persons were on the balloting committee:

William J. Ackerman
B. Y. Afshar
S. J. Arnot
A. C. Baker
Nelson Barbeito
G. J. Bartok
Burham Becer
Kevin M. Bevins
Michael J. Bio
K. L. Black
Charles Blattner
W. R. Block
Steve A. Boggs
P. C. Bolin
Steven D. Brown
James C. Burke
John B. Cannon
Robert E. Carberry
Daniel Charbonnet
Frank Y. Chu
D. M. Clark
J. R. Clayton
Richard G. Cottrell
E. F. Counsel
William Daily
Frank A. Denbrock
C. C. Diemond
W. Bruce Dietzman
T. L. Doern
Claude Durand
Gary Engmann
James W. Evans
Lenard N. Ferguson
George G. Flaig
David Lane Garrett
Floyd W. Greenway
John Grzan
David L. Harris
John E. Holladay
M. L. Holm
Zlatko Kapelina
Richard P. Keil
D. F. Koenig
Theodore J. Kolenda
Alan E. Kollar
T. Krummrey
Luther W. Kurtz
Donald N. Laird
Lawrence M. Laskowski
Alfred A. Leibold
C. T. Lindeberg
H. Peter Lips
Rusko Matulic
John D. McDonald
Thomas S. McLenahan
A. P. Sakis Meliopoulos
Philip R. Nannery
R. S. Nowell
Edward V. Olavarria
J. T. Orrell
James S. Oswald
Shashi G. Patel
Raymond J. Perina
K. Pettersson
Walter Prystajecky
J. Quinata

Copyright The Institute of Electrical and Electronics Engineers, Inc.
Provided by IHS under license with IEEE
No reproduction or networking permitted without license from IHS
Not for Resale

B. D. Russell	Robert P. Stewart	Duane R. Torgerson
Jakob Sabath	W. K. Switzer	L. F. Volf
Samuel C. Sciacca	Edgar R. Taylor, Jr.	R. J. Wehling
F. C. Shainauskas	John T. Tengdin	W. M. Werner
Bodo Sojka	Hemchand Thakar	
Robert C. St. Clair	Charles F. Todd	

When the IEEE Standards Board approved this guide on September 22, 1994, it had the following membership:

Wallace S. Read, *Chair*
Donald C. Loughry, *Vice Chair*
Andrew G. Salem, *Secretary*

Gilles A. Baril	Donald N. Heirman	D. N. “Jim” Logothetis
Bruce B. Barrow	Richard J. Holleman	L. Bruce McClung
José A. Berrios de la Paz	Jim Isaak	Marco W. Migliaro
Clyde R. Camp	Ben C. Johnson	Mary Lou Padgett
James Costantino	Sonny Kasturi	Arthur K. Reilly
Stephen L. Diamond	Lorraine C. Kevra	Ronald H. Reimer
Donald C. Fleckenstein	E. G. “Al” Kiener	Gary S. Robinson
Jay Forster*	Ivor N. Knight	Leonard L. Tripp
Ramiro Garcia	Joseph L. Koepfinger*	

*Member Emeritus

Also included are the following nonvoting IEEE Standards Board liaisons:

Satish K. Aggarwal	Richard B. Engelman	David E. Soffrin
James Beall	Robert E. Hebner	

Valerie E. Zelenty
IEEE Standards Project Editor

Copyright The Institute of Electrical and Electronics Engineers, Inc.
Provided by IHS under license with IEEE
No reproduction or networking permitted without license from IHS
Not for Resale

CLAUSE PAGE

1. Overview 1

1.1 Scope 1
1.2 Purpose 1

2. References 2

3. Definitions 2

4. Statutory requirements 2

4.1 Federal 3
4.2 State and local 4

5. Oil spill sources 5

5.1 Large oil-filled equipment 5
5.2 Cables 5
5.3 Mobile equipment 5
5.4 Oil-handling equipment 5
5.5 Oil storage tanks 5
5.6 Other sources 5

6. Criteria 6

6.1 Operating history 7
6.2 Probability of oil spills 7
6.3 Application determination 8
6.4 Performance monitoring 8

7. Containment 8

7.1 Containment systems 9
7.2 Discharge control systems 12
7.3 Soil characteristics and liners 23
7.4 Fire quenching considerations 24
7.5 Volume requirements 24
7.6 Warning alarms and monitoring 25
7.7 Retrofitting techniques 25
7.8 Maintenance of oil-containment systems 26

8. Control and cleanup 26

8.1 Typical SPCC plan requirements 27
8.2 Control and cleanup methods 29
8.3 Disposal 38
8.4 Maintenance of equipment 39

Copyright The Institute of Electrical and Electronics Engineers, Inc.
Provided by IHS under license with IEEE
No reproduction or networking permitted without license from IHS
Not for Resale

CLAUSE PAGE

Annex A (Informative) Typical notification form and spill report 40

Annex B (Informative) Collecting pit volume calculation 41

Annex C (Informative) Bibliography 43

Copyright The Institute of Electrical and Electronics Engineers, Inc.
Provided by IHS under license with IEEE
No reproduction or networking permitted without license from IHS Not for Resale

IEEE Guide for Containment and Control of Oil Spills in Substations

1. Overview

1.1 Scope

This guide discusses the significance of oil-spillage regulations and their applicability to electric supply substations; identifies the sources of oil spills; discusses typical designs and methods for dealing with oil containment and control of oil spills; and provides guidelines for preparation of a typical Spill Prevention Control and Countermeasure (SPCC) plan. This guide excludes polychlorinated biphenyl (PCB) handling and disposal considerations.

It is not the intent of this guide to interpret the applicability of the governmental regulations or the oil-containment systems presented. Such interpretation is left to each individual user. The guide is intended to identify concerns, offer solutions, and let users make their own evaluations.

This guide applies only to insulating oil containing less than 50 ppm of PCB, which is considered to be non-PCB oil. Non-PCB oils have a PCB content that has been designated by the U.S. Environmental Protection Agency (EPA) as nonhazardous to the public, and they are not deemed to be toxic substances. While the effectiveness of the containment methods described in this guide is generally not affected by the PCB content of the oil, the regulations governing cleanup and handling of oil spills containing PCB are much more restrictive.

1.2 Purpose

Containment and control of oil spills at electric supply substations is a concern for most electric utilities. The environmental impact of oil spills and their cleanup is governed by several federal, state, and local regulations, necessitating increased attention in substations to the need for secondary oil containment, and an SPCC plan. Beyond the threat to the environment, cleanup costs associated with oil spills continue to escalate, and the adverse community response to any spill is becoming increasingly unacceptable.

This guide identifies the applicable governmental regulations, the sources of oil spills, and the typical methods used to contain and control them. It discusses the need for an SPCC plan and provides the typical plan requirements. It documents survey-reported considerations for oil-spill containment, control, and cleanup; the methods used; and their effectiveness. In June 1992 an IEEE questionnaire was sent to 190 utilities in the U.S. and Canada, surveying their experiences. Of these utilities, 59 responded. Where relevant, the survey results are referenced in the body of this guide.

Copyright © 1998 IEEE All Rights Reserved

Copyright The Institute of Electrical and Electronics Engineers, Inc.
Provided by IHS under license with IEEE
No reproduction or networking permitted without license from IHS
Not for Resale

2. References

This guide shall be used in conjunction with the following publications:

IEEE Std 100-1992, The New IEEE Standard Dictionary of Electrical and Electronics Terms (ANSI).[1]

IEEE Std 979-1984 (Reaff 1988), IEEE Guide for Substation Fire Protection (ANSI).

U.S. Code of Federal Regulations, Title 40 (40CFR), Protection of the Environment, Parts 109–112.[2]

3. Definitions

This clause contains key terms as they are used in this guide. For additional definitions, see IEEE Std 100-1992 .[3]

3.1 collecting pit: A pit built under oil-filled equipment to collect any accidental discharge of oil from that piece of equipment.

3.2 fire quenching: Shock cooling by immersion of liquid or molten material in a cooling medium (crushed stones in collecting pits).

3.3 gallon: One U.S. gallon equals 3.785 liters.

3.4 harmful quantity of oil: A discharge of oil that 1) violates applicable water quality standards, 2) causes a film or sheen upon or discoloration of the surface of the water or adjoining shorelines, or 3) causes a sludge or emulsion to be deposited beneath the surface of the water or upon adjoining shorelines.

3.5 oil-containment system: A system designed to collect and retain oil in order to prevent 1) its migration beyond the boundaries of the system and 2) the contamination of navigable waters.

3.6 oil discharge: Any leak or spillage of oil, regardless of volume and including those that do not reach navigable waters. A discharge includes but is not limited to any spilling, leaking, pumping, pouring, emitting, emptying, or dumping of oil.

3.7 oil spill (spill event): A discharge of oil into or upon navigable waters or shorelines in harmful quantities.

3.8 permeability: The drainage characteristic of soil that denotes its capacity to conduct or discharge fluids under a given hydraulic gradient.

3.9 primary oil containment: A tank or enclosure designed for continuous containment of oil for operating or storage purposes.

3.10 retention pit: A pit designed to retain (hold) oil-contaminated liquids.

3.11 secondary oil containment: A system designed to contain the oil discharged from an oil-filled piece of equipment in situations of primary oil-containment failure.

3.12 void volume ratio: The volume of the void spaces between stones divided by the total volume occupied by the stones in a stone-filled collecting pit.

4. Statutory requirements

In general, the U.S. Code of Federal Regulations, Title 40 (40CFR), Parts 110 and 112, requires that appropriate oil containment and diversionary structures be provided to prevent discharged oil from reaching navigable waters, if a

[1]IEEE publications are available from the Institute of Electrical and Electronics Engineers, 445 Hoes Lane, P.O. Box 1331, Piscataway, NJ 08855-1331, USA.
[2]This document is available from the Superintendent of Documents, U.S. Government Printing Office, Washington, DC 20402.
[3]Information on references can be found in clause 2.

 Copyright © 1998 IEEE All Rights Reserved

Copyright The Institute of Electrical and Electronics Engineers, Inc.
Provided by IHS under license with IEEE
No reproduction or networking permitted without license from IHS Not for Resale

facility could reasonably be expected to discharge oil in harmful quantities into or upon said navigable waters. Further, where necessary a written SPCC contingency plan (see 8.1) shall be prepared that commits manpower, equipment, and materials to control and remove any quantity of discharged oil.

On October 22, 1991, the EPA issued proposed changes to 40CFR, Part 112. The changes were prompted by the spill that resulted from the collapse of a four million gallon aboveground storage tank near the Monongahela River as well as other major oil spills, but not by any substation event. The proposed regulations prompted a barrage of protests and lobbying efforts for less stringent requirements on smaller oil tanks. The issue has not yet been entirely resolved, and further EPA clarifications and changes can be expected for several years.

The regulations are very dynamic, and may have changed since the publication of this guide. The user is cautioned to check the latest regulations for revisions.

The application of these federal regulations to oil-spill containment and control in substations is further complicated by several key points that are currently subject to revision or interpretation. These include:

a) The minimum storage capacity in a single container or the entire substation before an SPCC plan and appropriate containment is required. Any change from the current limits may significantly impact the number of transformers, circuit breakers, and other oil-filled substation equipment where secondary containment is required.

b) What constitutes a bulk storage tank for which 40CFR, Part 112 regulations currently require secondary oil containment. The proposed rules currently indicate that transformers (and other electrical equipment) containing oil for operational rather than storage purposes will not be considered “bulk storage tanks.”

c) The term “navigable waters,” which as currently written in 40CFR, Part 110, is broad and encompassing. As defined by the EPA, it can include, in addition to the major lakes and waterways, tributaries of rivers, lakes, and streams, as well as mud flats and wetlands. The results of the 1992 IEEE survey found user interpretations of navigable waters as extreme as “any water conveyance, whether wet or normally dry.”

d) The amount of discharged oil that constitutes “harmful quantities.”

As stated earlier, interpretation of the specific regulations is left to each individual user. However, it should be noted that in test case applications of the law, the EPA has tended to be very conservative in its interpretations.

The probability of an oil spill occurring in a substation is very low (see 6.2). However, certain substations, due to their proximity to navigable waters or designated wetlands, the quantity of oil on site, surrounding topography, soil characteristics, etc., have or will have a higher potential for discharging harmful quantities of oil into or upon navigable waters or wetlands. At minimum, an SPCC plan will probably be required at these locations, and installation of secondary oil-containment facilities should be considered.

4.1 Federal

The federal requirements of the United States for discharge, control, and countermeasure plans for oil spills are contained in the Code of Federal Regulations, Title 40 (40CFR), Parts 110 and 112. The purpose of these regulations is to prevent the discharge of oil in harmful quantities into navigable waters, which also includes shorelines, wetlands, or areas that would adversely affect the natural resources of the United States, and to provide for containment systems in lieu of only providing cleanup measures after a spill has occurred. Definitions and specifics regarding navigable waters and other terms that are covered by these regulations are contained in the publication.

These regulations prohibit the discharge of oil in harmful quantities into navigable waters of the United States. Through the implementation of an SPCC plan, which may include secondary containment, the regulations require that effective containment plans be made to prevent the discharge of oil, and specify that a cleanup procedure or contingency plan be established to be implemented in the event of an oil spill. An SPCC plan alone can be utilized only where containment is shown to be impractical. Oil containment may be deemed impractical in situations where

Copyright © 1998 IEEE All Rights Reserved

Copyright The Institute of Electrical and Electronics Engineers, Inc.
Provided by IHS under license with IEEE
No reproduction or networking permitted without license from IHS Not for Resale

constraints prevent the installation of oil-containment systems and/or it is highly unlikely that oil would reach and contaminate navigable waters in the event of a discharge. Financial considerations alone are no longer a valid argument for not providing oil containment, as any contamination of navigable waters is unacceptable. Also, the cost associated with the expeditious cleanup of a spill will most likely exceed the cost of providing secondary oil containment.

These regulations apply to installations where the storage capacity of a single container aboveground exceeds 2500 L (660 gal), the aggregate capacity stored aboveground exceeds 5000 L (1320 gal), or where the capacity to contain oil stored underground exceeds 159 000 L (42 000 gal). The SPCC plan and appropriate containment can include the use of dikes, berms, curbing, culverts, weirs, absorbent materials, sumps, and collecting systems designed for the purpose of containing the discharge of harmful quantities of oil. In short, this requirement specifies that a properly engineered plan shall be developed and documented to contain the surface discharge of oil from a storage container at a facility that, due to its location, could reasonably be expected to discharge oil into or upon navigable waters in sufficient quantity to cause an oil sheen, or to clean up the spilled oil if containment can be shown to be not practicable. This plan shall be reviewed and certified by a registered professional engineer that has become familiar with these regulations, visited and examined the facility, concurs that good engineering practices have been used, and verifies that the appropriate testing has been performed and the plan is adequate for the facility.

In addition to the requirements prohibiting the discharge of harmful quantities of oil, 40CFR, Part 112 specifies that a report shall be made to the EPA Regional Administrator within 60112 days from the date of the spill in the event of a discharge of more than 3786 L (1000 gal) in a single spill or two spills of harmful quantities from the same facility in any 12-month period. Such a report (see annex A) shall contain the identification of the facility and information relating to the date and description of the spill, copy of the SPCC plan, cause, corrective action, and additional preventive measures that have been taken. Regulations require that any report of an oil spill be sent to the appropriate state agency as well.

In as much as the regulations make reference to an SPCC plan for a facility, it is the interpretation by the EPA that each facility (installation) shall have its own plan. While an overall plan for substations could be generic in nature, there is a requirement to site-specify the plan uniquely for each installation. Sufficient detail shall be included in the overall plan to identify location of equipment, contour of the site and surrounding area, and the drainage patterns.

In summary, federal regulations require that each installation exceeding the specified storage capacity limitations be assessed for the possibility of contaminating navigable waters. If the potential for contamination exists, then an SPCC plan (see 8.1) shall be developed. Such a plan shall contain all requirements of 40CFR, Part 112.7, including appropriate containment provisions and a contingency cleanup plan.

4.2 State and local

State and local requirements regarding oil spills are contained in 40CFR, Part 109.

State and local governments have generally adopted the existing federal regulations prohibiting discharges of oil. In addition, some states have issued their own oil-spill containment and control regulations. Often, the state and local requirements may be even more encompassing and restrictive than the federal requirements. Specifically, it is the responsibility of the state and local governments to enforce the cleanup portion of SPCC plans implemented by a utility within that government's jurisdiction. The procedure for the reporting of oil spills to state agencies varies from state to state, but generally, the procedure could be more stringent than that required by the federal government. The procedure usually requires a report by telephone immediately following the spill, and a follow-up written report that includes all the details of the oil spill. With respect to a cleanup plan, state agencies generally require that cleanup plans for oil spills be developed, written, and filed with the agency. Such a plan contains a written commitment of manpower, equipment, and materials that would be required to expeditiously control and remove any quantity of spilled oil.

 Copyright © 1998 IEEE All Rights Reserved

Copyright The Institute of Electrical and Electronics Engineers, Inc.
Provided by IHS under license with IEEE
No reproduction or networking permitted without license from IHS Not for Resale

5. Oil spill sources

Described below are various sources of oil spills within substations. Spills from any of these devices are possible. The user should evaluate the quantity of oil present, the potential impact of a spill, and the need for oil containment associated with each oil-filled device.

5.1 Large oil-filled equipment

Power transformers, oil-filled reactors, large regulators, and circuit breakers are the greatest potential source of major oil spills in substations, since they typically contain the largest quantity of oil. Spills may be caused by electrical failure, leaks, vandalism, sabotage, or accident.

Power transformers, reactors, and regulators may contain anywhere from a few hundred to 100 000 L or more of oil (500 to approximately 30,000 gal), with 7500–38,000 L (approximately 2000–10 000 gal) being typical. Substations usually contain one to four power transformers, but may have more.

The higher voltage oil circuit breakers may have three independent tanks, each containing 400–15 000 L (approximately 100–4000 gal) of oil, depending on their rating. However, most circuit breaker tanks contain less than 4500 L (approximately 1200 gal) of oil. Substations may have 10–20 or more oil circuit breakers.

5.2 Cables

Substation pumping facilities and cable terminations (potheads) that maintain oil pressure in pipe-type cable installations are another source of oil spills. Again, spills are caused by electrical failure, leaks, vandalism, sabotage, or accidents. Depending on its length and rating, a pipe-type cable system may contain anywhere from 5000 L (approximately 1500 gal) up to 38 000 L (approximately 10 000 gal) or more of oil.

5.3 Mobile equipment

Although mobile equipment and emergency facilities may be used infrequently, consideration should be given to the quantity of oil contained and associated risk of oil spill. Mobile equipment may contain up to 30 000 L (approximately 7500 gal) of oil.

5.4 Oil-handling equipment

Oil filling of transformers, circuit breakers, cables, etc., occurs when the equipment is initially installed. In addition, periodic reprocessing or replacement of the oil may be necessary to ensure that proper insulation qualities are maintained. Oil pumps, temporary storage facilities, hoses, etc., are brought in to accomplish this task. Although oil-processing and handling activities are less common, spills from these devices can still occur.

5.5 Oil storage tanks

Some consideration should be given to the presence of bulk oil storage tanks (either aboveground or belowground) in substations as these oil tanks could be responsible for an oil spill of significant magnitude. Also, the resulting applicability of the 40CFR, Part 112 rules for those storage tanks could require increased secondary oil containment for the entire substation facility. The user may want to reconsider storage of bulk oil at substation sites.

5.6 Other sources

Station service, voltage, and current transformers, as well as smaller voltage regulators, oil circuit reclosers, capacitor banks, and other pieces of electrical equipment typically found in substations, contain small amounts of insulating oil, usually less than the 2500 L (660 gal) minimum for a single container. Only under most unusual circumstances could they be responsible for an oil spill of the magnitude described in 40CFR.

Copyright © 1998 IEEE All Rights Reserved

Copyright The Institute of Electrical and Electronics Engineers, Inc.
Provided by IHS under license with IEEE
No reproduction or networking permitted without license from IHS Not for Resale

6. Criteria

Based on the applicability of the latest regulatory requirements, or when an unacceptable level of oil spills has been experienced, a program should be put in place to mitigate the problems. Typical criteria for implementing oil spill containment and control programs incorporate regulatory requirements, corporate policy, frequency and duration of occurrences, cost of occurrences, safety hazards, severity of damage, equipment type, potential impact on nearby customers, substation location, and quality of service requirements.

The decision to install secondary containment at new substations (or to retrofit existing substations) is usually based on a predetermined criteria. The 1992 IEEE survey addressed the factors used to determine where oil spill containment and control programs are needed. Based on the survey, the criteria in table 1 are considered when evaluating the need for secondary oil containment.

As for specific numerical limits, 57% of the respondents install secondary containment when the maximum volume of oil per individual tank exceeds the 2500 L (660 gal) 40CFR, Part 112 limit, with a range of 1900–11 400 L (approximately 500–3000 gal) reported. Over 82% also limit the total volume of oil in the substation to the 5000 L (1320 gal) specified in 40112CFR, Part 112, with a range of 2500–5700 L (approximately 660–1500 gal) reported. The 1992 IEEE survey provided no clear cut limit for the proximity to navigable waters. Relatively equal support was reported for several choices over the range of 50–500 m (approximately 150–1500 ft).

Rarely is all of the equipment within a given substation provided with secondary containment. Table 2 lists the survey results identifying the equipment for which secondary oil containment is provided.

None of the remaining equipment surveyed, which included voltage and current transformers, capacitors, and all mobile devices, received a rating higher than 15%.

Table 1— Secondary oil-containment evaluation criteria

Criteria	Utilities responding that apply this criteria
Volume of oil in individual device	88%
Proximity to navigable waters	86%
Total volume of oil in substation	62%
Potential contamination of groundwater	61%
Soil characteristics of the station	42%
Location of substation (urban, rural, remote)	39%
Emergency response time if a spill occurs	30%
Failure probability of the equipment	21%
Age of station or equipment	10%

 Copyright © 1998 IEEE All Rights Reserved

Copyright The Institute of Electrical and Electronics Engineers, Inc.
Provided by IHS under license with IEEE
No reproduction or networking permitted without license from IHS Not for Resale

Table 2— Secondary oil-containment equipment criteria

Equipment	Utilities responding that provide secondary containment
Power transformers	86%
Aboveground oil storage tanks	77%
Station service transformers	44%
Oil circuit breakers	43%
Three-phase regulators	34%
Belowground oil storage tanks	28%
Shunt reactors	26%
Oil-filling equipment	22%
Oil-filled cables and terminal stations	22%
Single-phase regulators	19%
Oil circuit reclosers	15%

The focus is clearly on the equipment that contains the largest quantities of oil (see 5.1). As for specific minimum voltage and/or megavolt ampere (MVA) criteria above which a user always installs secondary containment, a wide range of figures was reported. For voltage, the minimum criteria was most often 115 kV, with a range of 69–345 kV reported. For MVA, the minimum criteria was most often 10 MVA, with a range of 5–45 MVA reported.

Whatever the criteria, each substation should be evaluated by considering the criteria to determine candidate substations for oil-containment systems (both new and retrofit). Substations with planned equipment change-outs should be considered for retrofits at the time of the change-out.

6.1 Operating history

Once the need for a program is identified, the specific causes of the problem need to be determined. Spill records, maintenance reports, and routine inspections of facilities will afford specific information as to the cause and extent of the problem.

Typical information found in these reports includes facility name, date, time, equipment affected, duration of the discharge, quantity of oil discharged, and number of customers affected.

6.2 Probability of oil spills

Both the frequency and magnitude of oil spills in substations can be considered to be very low. The probability of an oil spill at any particular location depends on the number and volume of oil containers, and other site-specific conditions.

The probability of a spill was verified by the results of two questionnaires submitted in 1977 to utility members of the IEEE Substations Committee by the Oil Spill Prevention, Control and Countermeasures Task Force of the Environmental Subcommittee. The information showed that during the ten-year period from 1965–1974, these utilities had a total of less than one discharge for each 330 pieces of equipment in service. Over the two-year period 1975–1976, these utilities had less than one discharge for each 1200 pieces of equipment in service. The figures also showed that during the ten-year period, less than one discharge reached a waterway for each 5275 pieces of equipment in service. During the two-year period 1975–1976, less than one discharge reached a waterway for each 6640 pieces of equipment.

Copyright © 1998 IEEE All Rights Reserved

Copyright The Institute of Electrical and Electronics Engineers, Inc.
Provided by IHS under license with IEEE
No reproduction or networking permitted without license from IHS Not for Resale

The task force concluded that, while this empirical data was not precise, it clearly indicated that the number of spills per piece of equipment in service per year is small.

6.3 Application determination

After reviewing the operating history and determining containment and control options, the application determination process should include consideration of the solution's cost-benefit ratio, applicable governmental regulations, and community acceptance.

6.3.1 Economic aspects

The anticipated cost of implementing the containment measures should be compared to the anticipated benefit. However, cost alone can no longer be considered a valid reason for not implementing containment and/or control measures, because any contamination of navigable waters may be prohibited by governmental regulations. Application determination cannot rely on the low probabilistic risk of an oil spill to avoid implementation of containment and control measures.

Economic aspects can be considered when determining which containment system or control method to employ. Factors such as proximity to waterways, volume of oil, response time following a spill, etc., can allow for the use of less effective methods at some locations.

6.3.2 Governmental regulations

Due to the dynamic nature of environmental regulations, some methods described in this guide could become in conflict with governmental regulations or overlapping jurisdictions. Therefore, determination of which containment system or control method to use should include research into applicable laws and regulations.

6.3.3 Community acceptance

Community acceptance of the oil spill containment and control methods should also be considered. Certain levels of unacceptability are intangible and may be dictated by company policies, community acceptance, customer relations, etc. The impact on adjacent property owners should be addressed and, if needed, a demonstration of performance experiences could be made available.

6.4 Performance monitoring

Some means should be put in place for evaluating the effectiveness of any containment and control measures that have been applied. Records should be kept for each substation to record the method used, date of application, and the history of oil spills. A record is necessary to monitor the performance of the applied method to evaluate the feasibility of future applications.

7. Containment

It is beyond the scope of this guide to make specific recommendations as to which type of oil-containment system is best suited for specific incidents due to the wide range of site variables that can exist. However, as an aid to those engaged in the design of oil-containment systems, several examples of various types that have been utilized are provided for reference and described below.

From the 1992 IEEE survey results, it became clear that no single containment system or discharge control method is preferable. All of the methods have been utilized successfully, and are ranked in table 3 in order of survey preference. There appears to be some correlation to the cost and complexity of the system, with the less expensive, simpler systems being employed most often. As to effectiveness, it was common for each individual user to favor their own method while reporting that the other methods were ineffective. As a result, the reported effectiveness results were

 Copyright © 1998 IEEE All Rights Reserved

Copyright The Institute of Electrical and Electronics Engineers, Inc.
Provided by IHS under license with IEEE
No reproduction or networking permitted without license from IHS Not for Resale

inconclusive. Very few utilities reported a measured effectiveness. The effectiveness ratings appeared to be somewhat subjective, and based as much on the inconveniences associated with the application of the method as any other criteria, due in some part to the lack of testing and very few actual spills.

7.1 Containment systems

Figure 1 illustrates a typical oil-retention pit into which a pipe drainage system empties. The drainage system network connects numerous collecting pits located under oil-filled pieces of equipment, and directs surface water runoff and any potential oil discharge to the retention pit.

Figure 2 illustrates a typical cross-section of the containment system and the design principle upon which this system is based. Oil, being less dense than water, will float on top of the water and is effectively contained on site by proper sizing of the pit and the design of the gravity separator. Generally, the pit is sized such that it will contain the entire quantity of discharged oil from the largest piece of equipment plus an assumed amount of retained water (see 7.5 for a discussion of volume requirements). Substation sites located in areas of porous soil, where the permeability is greater than 10^{-3} cm/s (see 7.3), should have their oil-collecting and retention pits lined (with a layer of clay, concrete, plastic, a rubber pit liner, etc.) to prevent migration of oil into the ground.

Figure 3 is basically the same as figure 1, except the oil-retention pit has been replaced with one of several possible discharge control systems (see 7.2) that requires less land area. Therefore, this type of installation may be more practical at substations where the available land area is limited. Unlike the oil-retention pit, which is designed to contain the entire quantity of discharged oil plus an assumed amount of retained water (rainwater, melted snow, water spray system discharge, etc.), this system is constructed such that any discharged oil is backed up through the drainage system and contained in the various collecting pits beneath oil-filled equipment.

Table 3— Containment method utilization

Containment system or discharge control method	Figure no.	Utilities responding that employ method	
		For new substations	For retrofits
Perimeter or equipment berm	6, 7	67%	58%
Fire quenching and oil-retention pit	4, 5, 10	60%	42%
Oil-retention pit	1, 2	48%	43%
Oil-water separator	11	41%	27%
Oil-detection-triggered sump pump	16	31%	39%
Gravity separator	9	24%	15%
Oil-water stop valve	15	22%	35%
Gravity separator	8	15%	10%
Oil trap	12	8%	14%
Oil-absorbing polymer bead bed	13, 14	8%	17%

Copyright © 1998 IEEE All Rights Reserved

Copyright The Institute of Electrical and Electronics Engineers, Inc.
Provided by IHS under license with IEEE
No reproduction or networking permitted without license from IHS Not for Resale

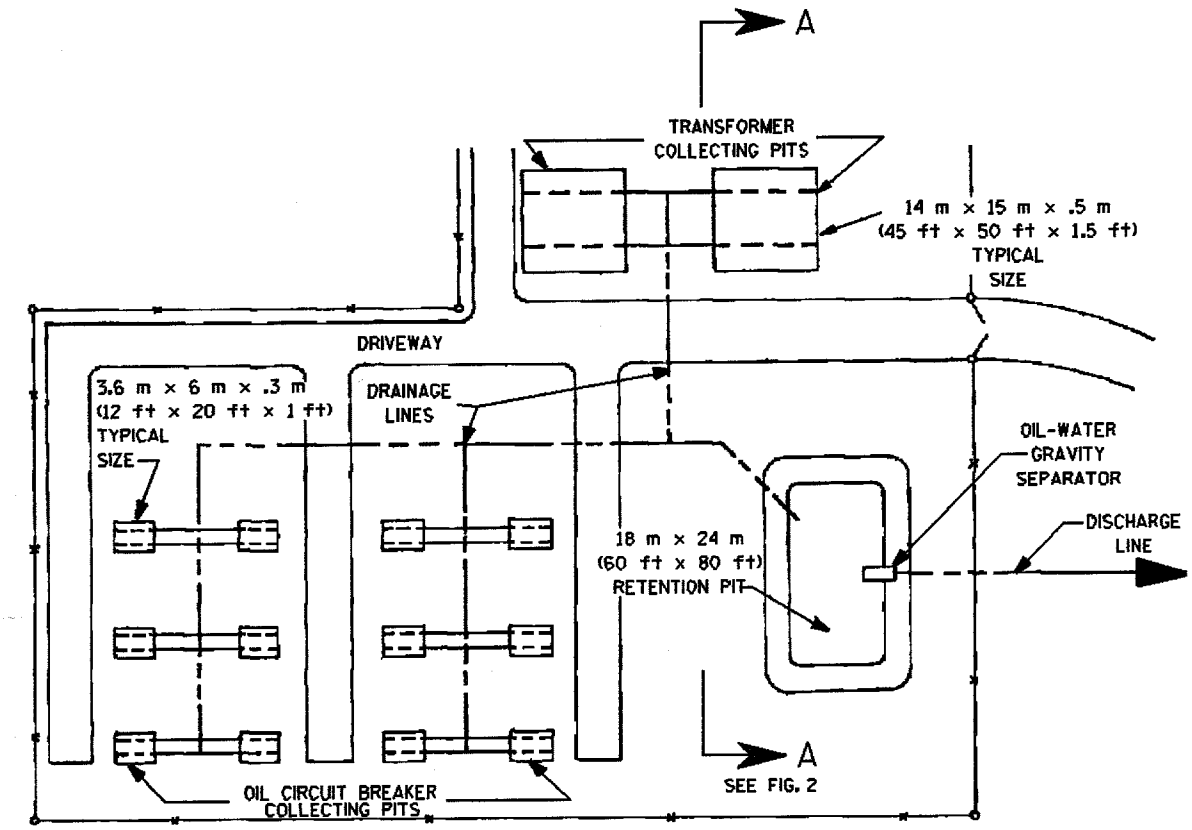

Figure 1— Typical oil-containment system with retention pit

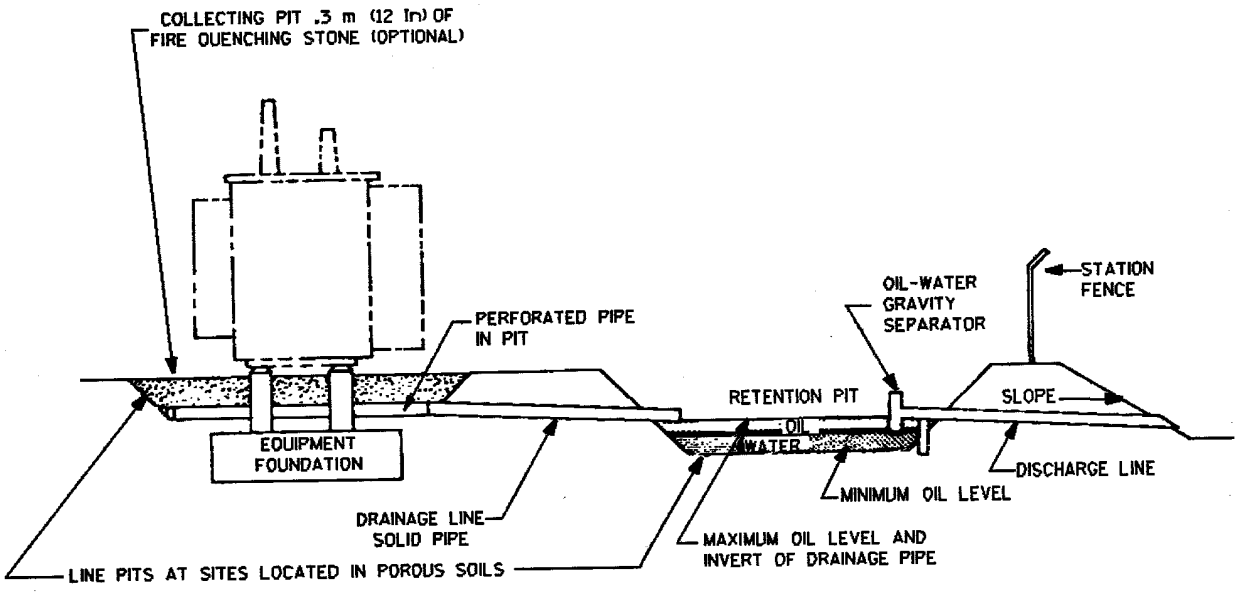

Figure 2— Cross-section of oil-containment system with retention pit

Copyright © 1998 IEEE All Rights Reserved

Copyright The Institute of Electrical and Electronics Engineers, Inc.
Provided by IHS under license with IEEE
No reproduction or networking permitted without license from IHS
Not for Resale

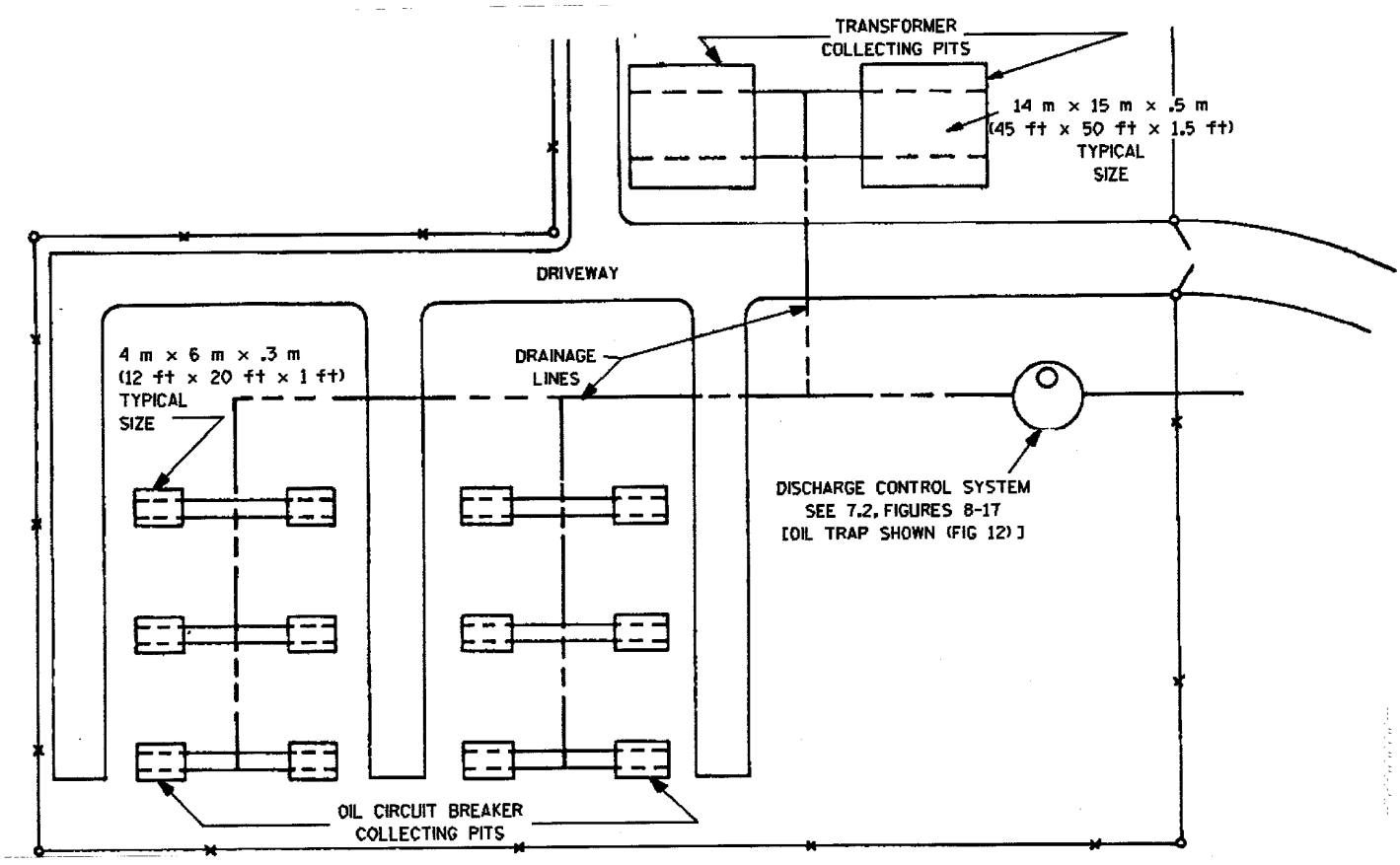

Figure 3— Typical oil-containment system with discharge control system

Figures 4 and 5 illustrate design concepts for pits utilized under individual major equipment units. Figure 4 depicts a concrete pit while figure 5 depicts an impervious liner over a pit dug in soil. These pit designs can be employed for use as either a retention or collecting pit, depending on the method of discharge control. When located directly under large pieces of oil-filled equipment, the pit can be filled with stone for use in quenching oil fires (see 7.4). If open pits are employed, grating can be added to allow the operator safe access to necessary areas of the equipment.

Based on the 1992 IEEE survey results, the pit is typically designed to extend 1.5–3.0 m (approximately 5–10 ft) beyond the edge of the tank in order to capture a majority of the leaking oil. A larger pit size would be required to capture all of the oil contained in an arcing stream from a small puncture at the bottom of the tank (such as from a bullet hole). However, it appears that the low probability of the event and economic considerations govern the 1.5–3.0 m (5–10 ft) design criteria. For all of the oil to be contained, the pit or berm should extend 7.6 m (25 ft) or more beyond the tank and radiators.

Figure 6 illustrates the application of an earthen dike around the desired equipment; in some applications, it may be utilized around the entire substation perimeter. While often a very economical containment method, use of this type of berm requires regular inspection to ensure that the integrity of the berm has not been compromised by weathering effects, or human and vehicular traffic.

Figure 7 illustrates a typical portable secondary oil-containment berm and tank. These devices are made of a self-supporting fabric liner, and can be applied in emergency or temporary installations. They are inflated with air or filled with a liquid, and are lightweight and compact for storage and transportation.

Copyright © 1998 IEEE All Rights Reserved

Copyright The Institute of Electrical and Electronics Engineers, Inc.
Provided by IHS under license with IEEE
No reproduction or networking permitted without license from IHS Not for Resale

The oil-containment facilities described above are designed to fully contain discharged oil on site. These systems are generally installed without too much difficulty during construction of new substations, but some may be impractical to install at existing substations. If a complete oil-containment system is impractical to construct, a designer should consider use of other measures (such as strategically located berms or dikes constructed of low-permeability soil) that can act as a delaying mechanism by impeding the flow of oil. This will provide extra time for cleanup operations.

The above facilities assume the discharged oil to exist in bulk form or to be floating in bulk form on whatever residual water is present in the pit. When fire-suppression sprays are used to extinguish a transformer fire, the oil can become emulsified to some degree and could be discharged through a gravity type oil-water separator. This might necessitate that the containment pit be sized to contain both oil and the liquid from the fire-suppression spray before discharge can occur.

7.2 Discharge control systems

An adequate and effective station drainage system is an essential part of any oil-containment design. Drains, swales, culverts, catch basins, etc., provide measures to ensure that water is diverted away from the substation. In addition, the liquid accumulated in the collecting pits or sumps of various electrical equipment, or in the retention pit has to be discharged. This liquid consists mainly of water (rainwater, melted snow or ice, water spray system discharges, etc.). Oil should be present only in case of an equipment discharge. Containment systems that discharge the accumulated water into the drainage system of the substation or outside the station perimeter should be equipped with a discharge control system.

These systems, described below, provide methods to release the accumulated water from the containment system while blocking the flow of discharged oil for later cleanup. In general, these discharge systems are independent of the containment methods described in 7.1. Any collected water should be released as soon as possible so that the entire capacity of the containment system is available for oil containment in the event of a spill. Where the ambient temperatures are high enough, evaporation may eliminate much of the accumulated water. However, the system still should be designed to handle the worst-case event.

 Copyright © 1998 IEEE All Rights Reserved

Copyright The Institute of Electrical and Electronics Engineers, Inc.
Provided by IHS under license with IEEE
No reproduction or networking permitted without license from IHS Not for Resale

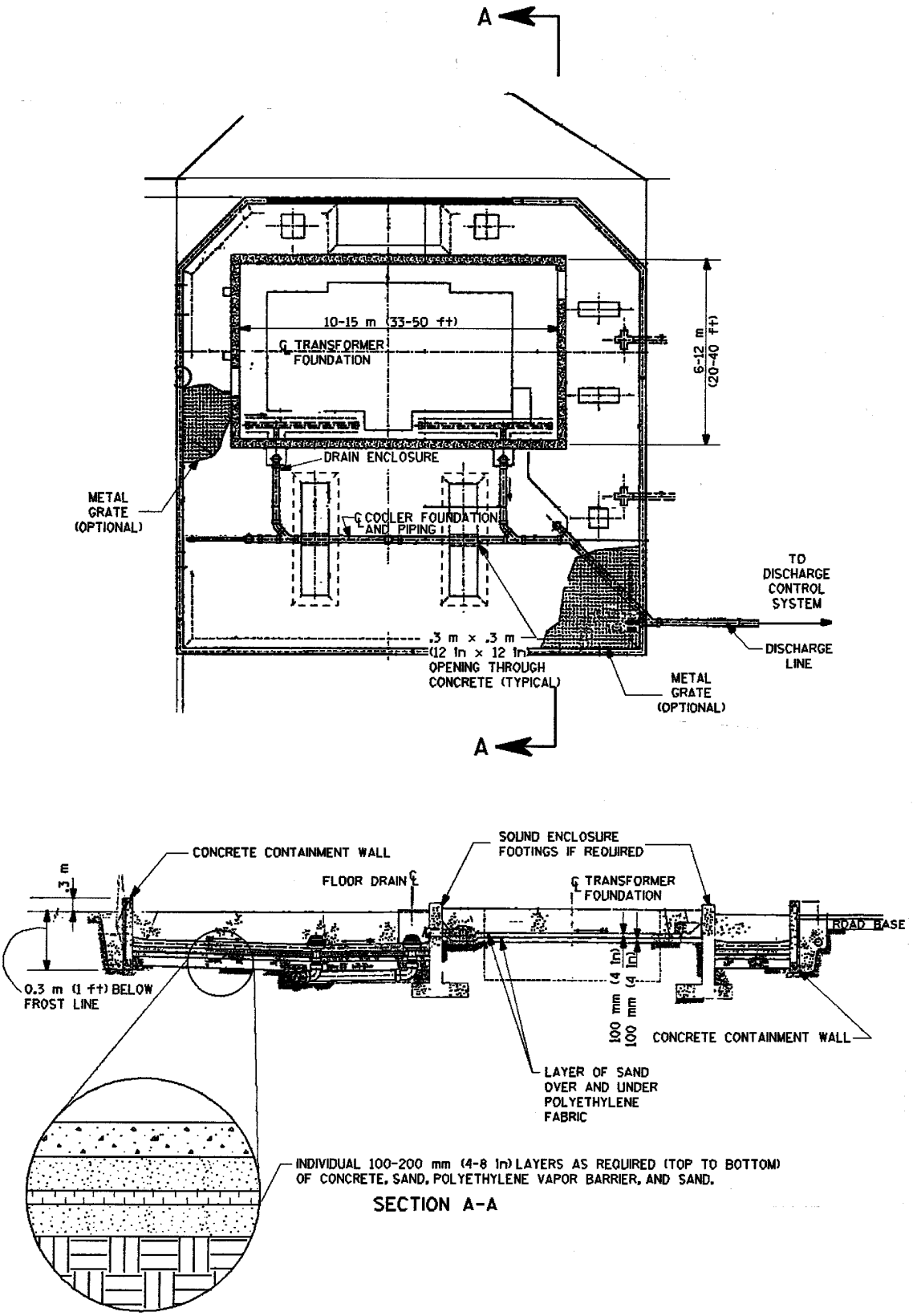

Figure 4— Typical concrete pit

Copyright © 1998 IEEE All Rights Reserved

Copyright The Institute of Electrical and Electronics Engineers, Inc.
Provided by IHS under license with IEEE
No reproduction or networking permitted without license from IHS
Not for Resale

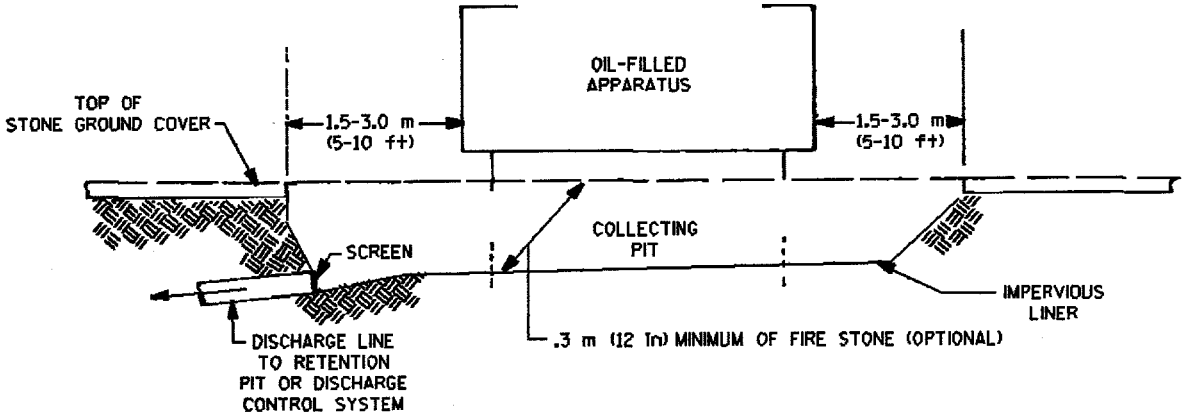

Figure 5— Typical earthen pit with impervious liner

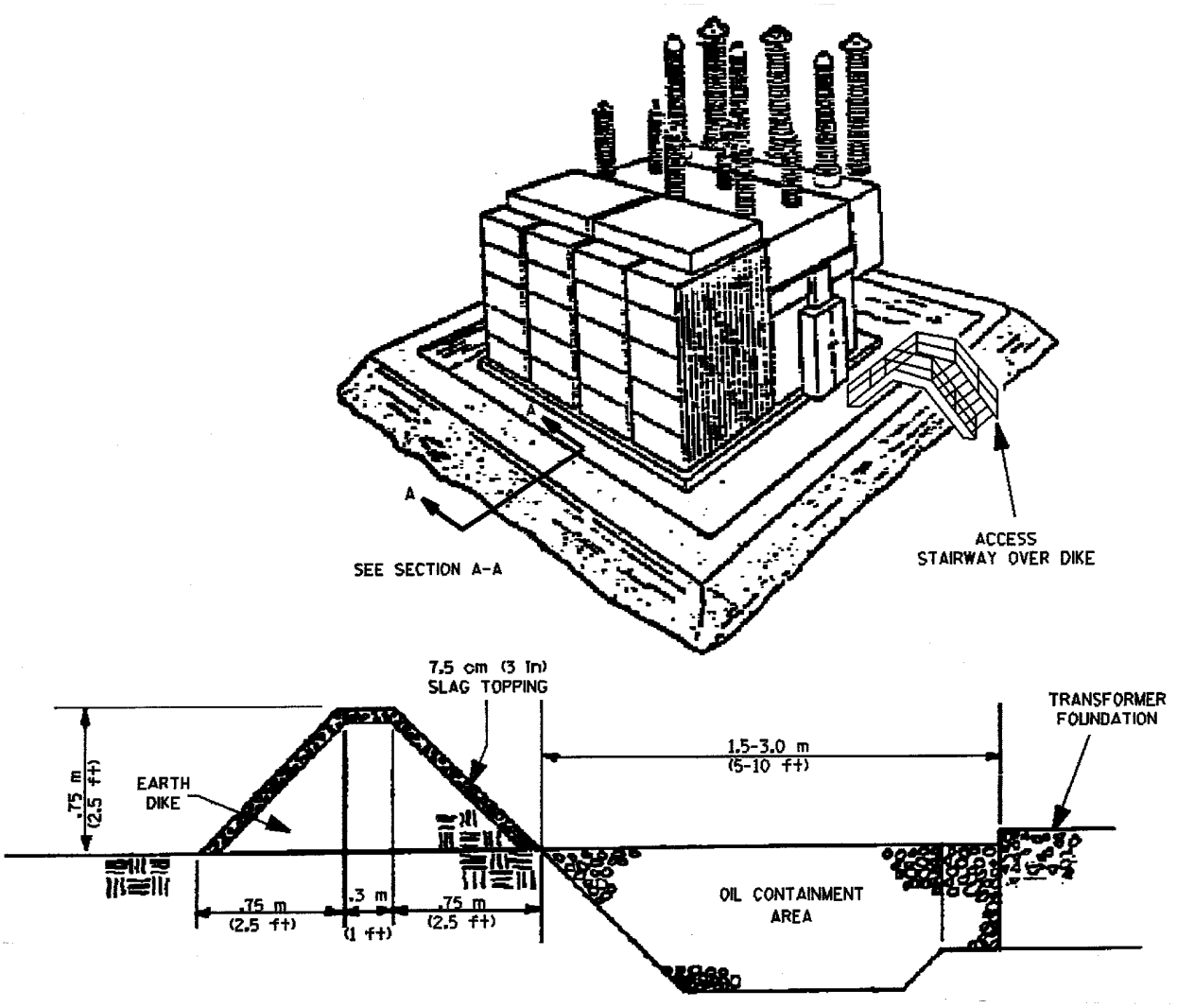

Figure 6— Typical oil-containment system with earth dike

Copyright © 1998 IEEE All Rights Reserved

Copyright The Institute of Electrical and Electronics Engineers, Inc.
Provided by IHS under license with IEEE
No reproduction or networking permitted without license from IHS
Not for Resale

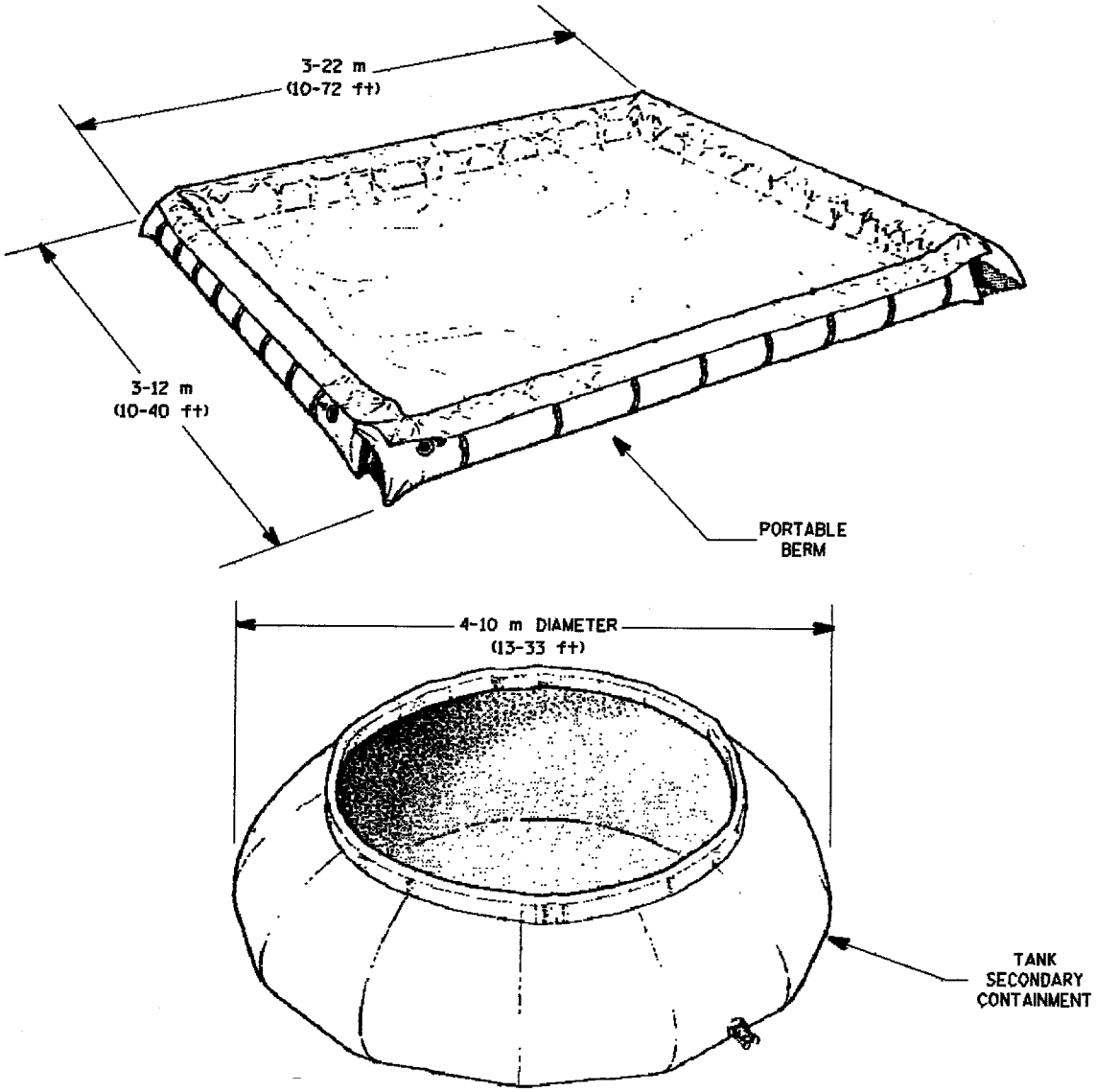

Figure 7— Typical portable berms and tanks

7.2.1 Oil-water separator systems

Described below are several oil-water separator systems that rely on the difference in specific gravity between oil and water. Because of that difference, the oil will normally float on top of the water, allowing the water to act as a barrier and block the discharge of the oil.

Oil-water separator systems require the presence of water to operate effectively, and will allow water to continue flowing even when oil is present. The presence of emulsified oil in the water may, under some turbulent conditions, allow small quantities of oil to pass through an oil-water separator system. Use of more sensitive discharge control systems (see figures 13, 14, and 16) should be considered where stringent governmental regulations do not allow for even small amounts of oil to be discharged. A combination of discharge control systems may be required to be totally effective.

Copyright © 1998 IEEE All Rights Reserved

Copyright The Institute of Electrical and Electronics Engineers, Inc.
Provided by IHS under license with IEEE
No reproduction or networking permitted without license from IHS
Not for Resale

Figure 8 illustrates the detail of an oil-water gravity separator that is designed to allow water to discharge from a collecting or retention pit, while at the same time retaining the discharged oil.

The separator in figure 9 is similar to that in figure 8 except that it is designed for stations located in areas with freezing temperatures. The depth of the discharge pipe would be determined relative to the average penetration of frost for the specific area of installation.

Figure 10 illustrates another type of oil-water separator. This separator consists of a concrete enclosure, located inside a collecting or retention pit and connected to it through an opening located at the bottom of the pit. The enclosure is also connected to the drainage system of the substation. The elevation of the top of the concrete weir in the enclosure is selected so as to be slightly above the maximum elevation of discharged oil in the pit. In this way the level of liquid in the pit will be under a layer of fire quenching stones where a stone-filled pit is used. During heavy accumulation of water, the liquid will flow over the top of the weir into the drainage system of the station. A valve is incorporated in the weir. This normally closed, manually operated valve allows for a controlled discharge of water from the pit when the level of liquid in the pit and enclosure is below the top of the weir.

Figure 11 illustrates a simple, inexpensive oil-water separator unit that could be effective in draining water from an oil sump.

Figure 12 provides a typical detail of an oil trap type oil-water separator. In this system, the oil will remain on top of the water and not develop the head pressure necessary to reach the bottom of the inner vertical pipe. In order for this system to function properly, the water level in the manhole portion of the oil trap must be maintained at an elevation no lower than 0.6 m (approximately 2 ft) below the inlet elevation. This will ensure that an adequate amount of water is available to develop the necessary hydraulic head within the inner (smaller) vertical pipe, thereby preventing any discharged oil from leaving the site. It is important to note that the inner vertical pipe should be extended downward past the calculated water-oil interface elevation sufficiently to ensure that oil cannot discharge upward through the inner pipe. Likewise, the inner pipe must extend higher than the calculated oil level elevation in the manhole to ensure that oil does not drain downward into the inner pipe through the vented plug. The reason for venting the top plug is to maintain atmospheric pressure within the vertical pipe, thereby preventing any possible siphon effect.

7.2.2 Flow blocking systems

Described below are several oil flow blocking systems that do not require the presence of water to operate effectively. These systems detect the presence of oil and block all flow (both water and oil) through the discharge system. The best of these systems have been shown to be the most sensitive in detecting and blocking the flow of oil. However, they are generally of a more complex design and may require greater maintenance to ensure continued effectiveness.

Figures 13 and 14 illustrate a method that uses a swellable polymer as an oil-absorbing media. These materials have the property to absorb as much as 27 times their original volume, and to swell to 3 or 4 times their original diameter. They are hydrophobic and will not, even partially, absorb water or brine solutions. By swelling in the presence of oil, this oil-absorbing polymer material will plug the pipe or drain in which it is located, blocking the flow of any discharged oil. The diameter of the drain pipe and the thickness of the polymer layer have to be carefully selected to provide the proper oil-retaining capabilities. A filter layer placed on top of the main polymer bed will retain impurities and silt contained in the incoming liquid, absorb any trace amounts of oil present, and minimize the frequency of maintenance work on the main polymer layer. It also reduces the flow speed of the liquid, allowing a longer contact of oil with the absorbing media, thereby increasing the efficiency of the method. However, over time, as the silt accumulates in the filter layer, it can block the flow of water and require cleaning or replacement of the filter layer.

 Copyright © 1998 IEEE All Rights Reserved

--`,,`-`-`,,`,,`,`,,`---
Copyright The Institute of Electrical and Electronics Engineers, Inc.
Provided by IHS under license with IEEE
No reproduction or networking permitted without license from IHS Not for Resale

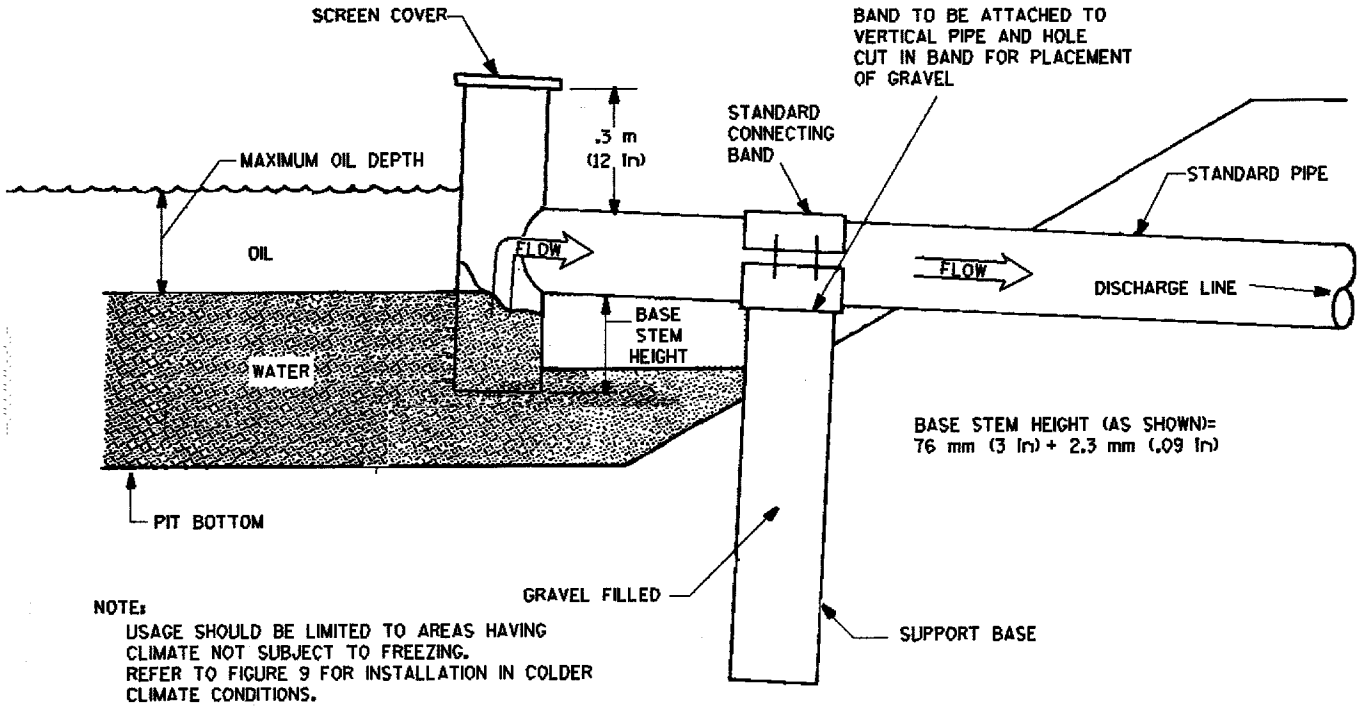

Figure 8— Oil-water gravity separator (for warm climates)

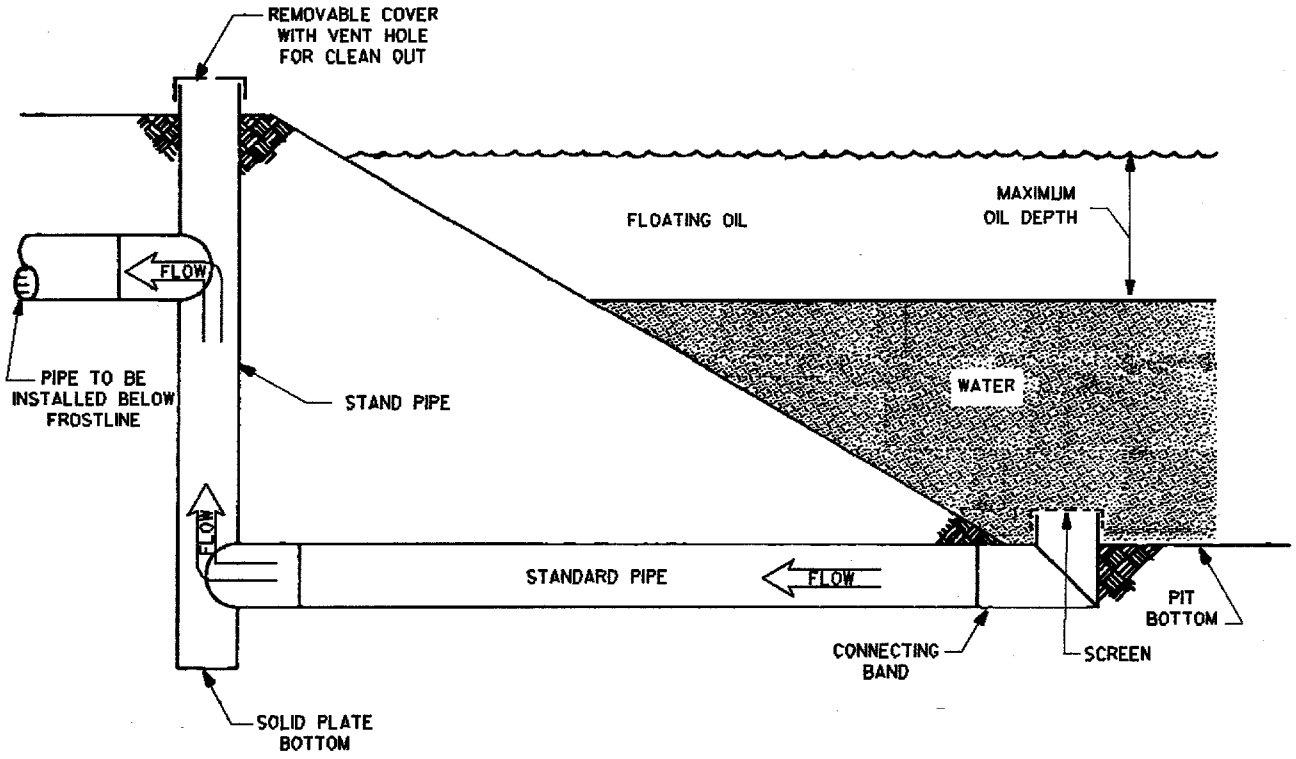

Figure 9— Oil-water gravity separator (for cold climates)

Copyright © 1998 IEEE All Rights Reserved

Copyright The Institute of Electrical and Electronics Engineers, Inc.
Provided by IHS under license with IEEE
No reproduction or networking permitted without license from IHS
Not for Resale

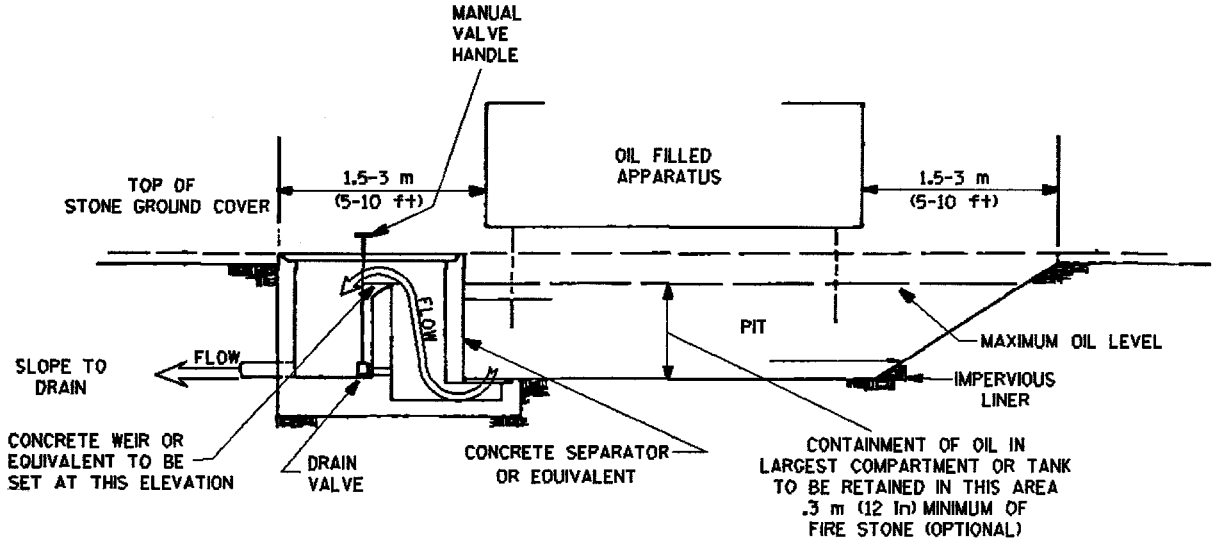

Figure 10— Oil-water separator at the oil retention pit

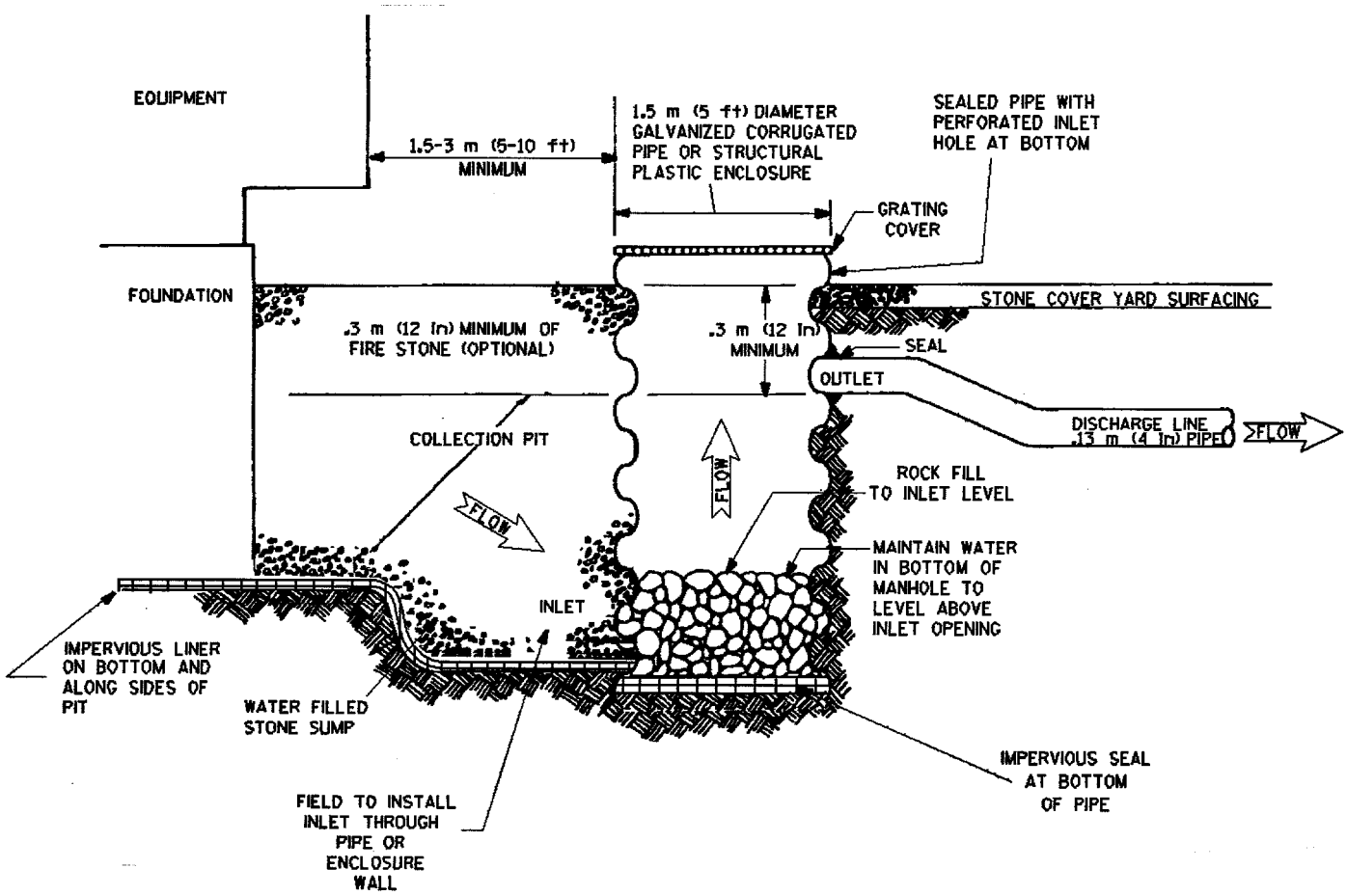

Figure 11— Simple oil-water separator

Copyright © 1998 IEEE All Rights Reserved

Copyright The Institute of Electrical and Electronics Engineers, Inc.
Provided by IHS under license with IEEE
No reproduction or networking permitted without license from IHS
Not for Resale

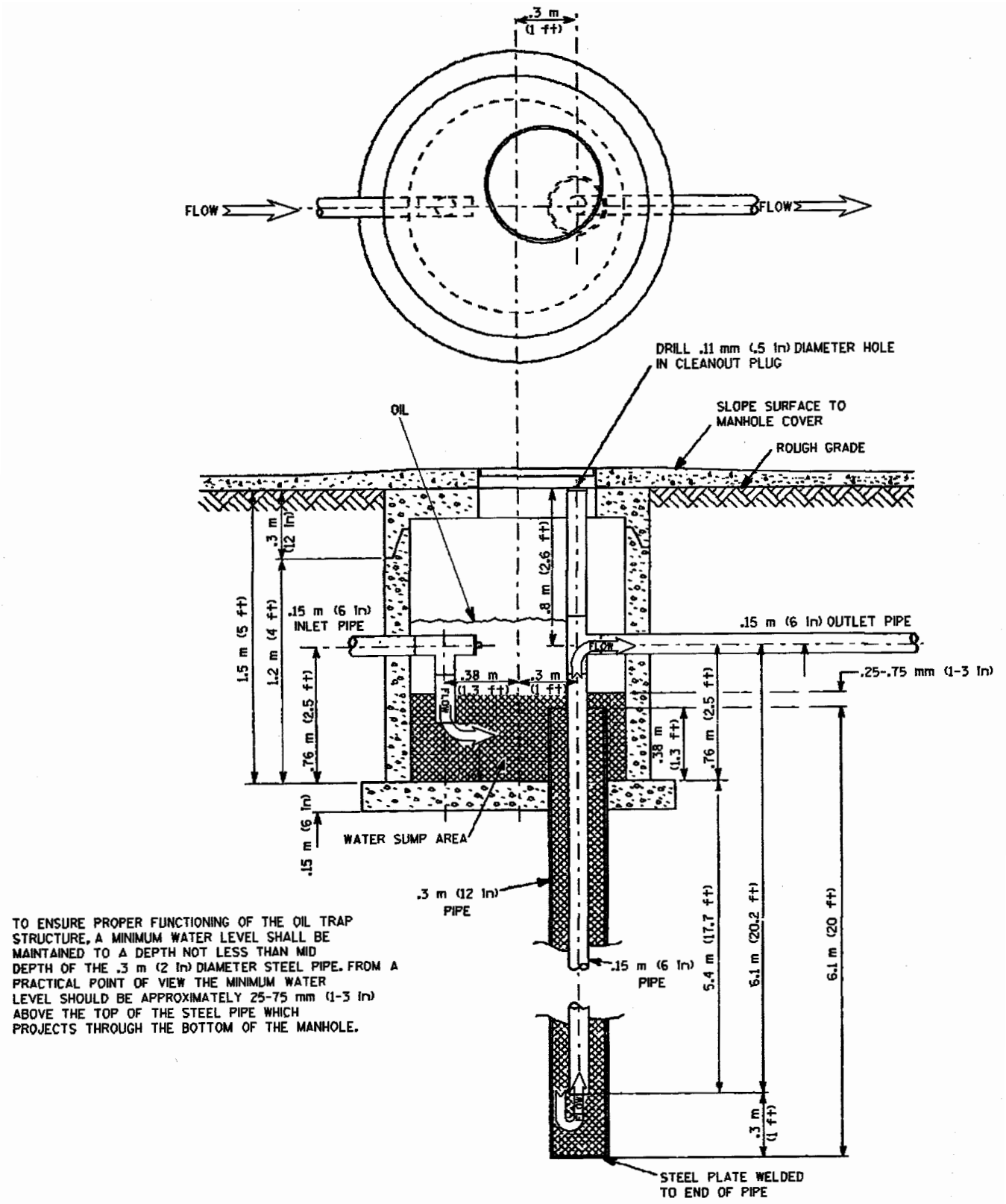

Figure 12— Oil trap type oil-water separator

Copyright © 1998 IEEE All Rights Reserved

Copyright The Institute of Electrical and Electronics Engineers, Inc.
Provided by IHS under license with IEEE
No reproduction or networking permitted without license from IHS
Not for Resale

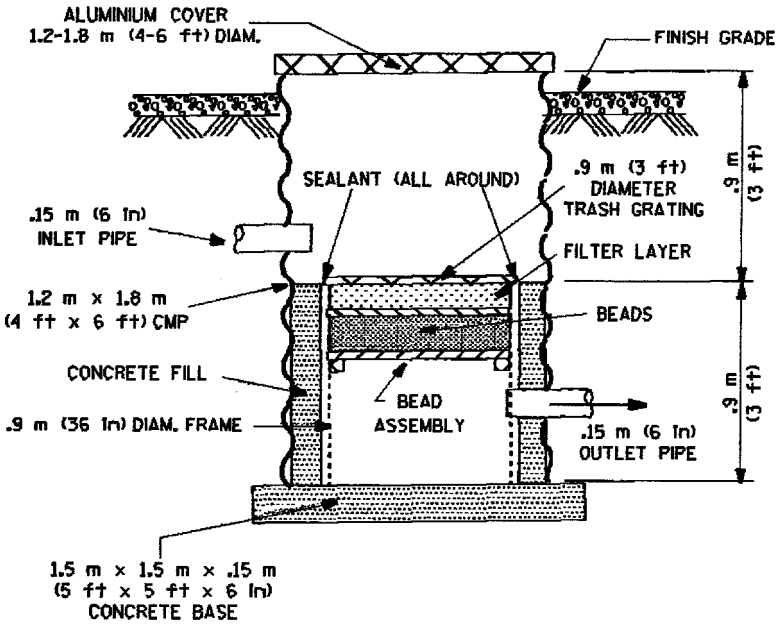

Figure 13— Oil-absorbing polymer bead bed (installed in manhole)

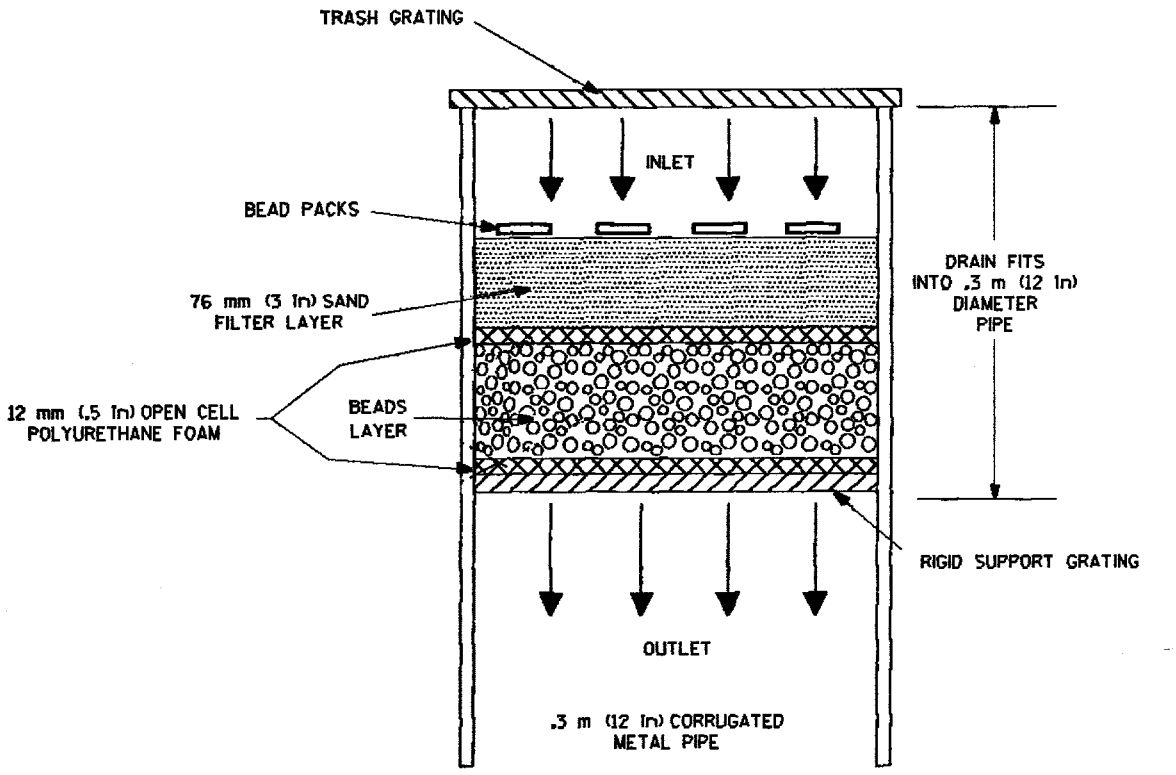

Figure 14— Oil-absorbing polymer bead bed (installed in drain pipe)

Copyright © 1998 IEEE All Rights Reserved

Copyright The Institute of Electrical and Electronics Engineers, Inc.
Provided by IHS under license with IEEE
No reproduction or networking permitted without license from IHS
Not for Resale

Figure 15 illustrates an oil stop valve installed inside a manhole. The valve has only one moving part, a ballasted float set at a specific gravity between that of oil and water. When oil reaches the manhole, the float in the valve loses buoyancy and sinks as the oil level increases until it sits on the discharge opening of the valve and blocks any further discharge. When the oil level in the manhole decreases, the float will rise automatically and allow discharge of water from the manhole. Some of the oil stop valves have a weep hole in the bottom of the valve that allows the ballasted float to be released after the oil is removed. This can cause oil to discharge if the level of the oil is above the invert of the discharge pipe.

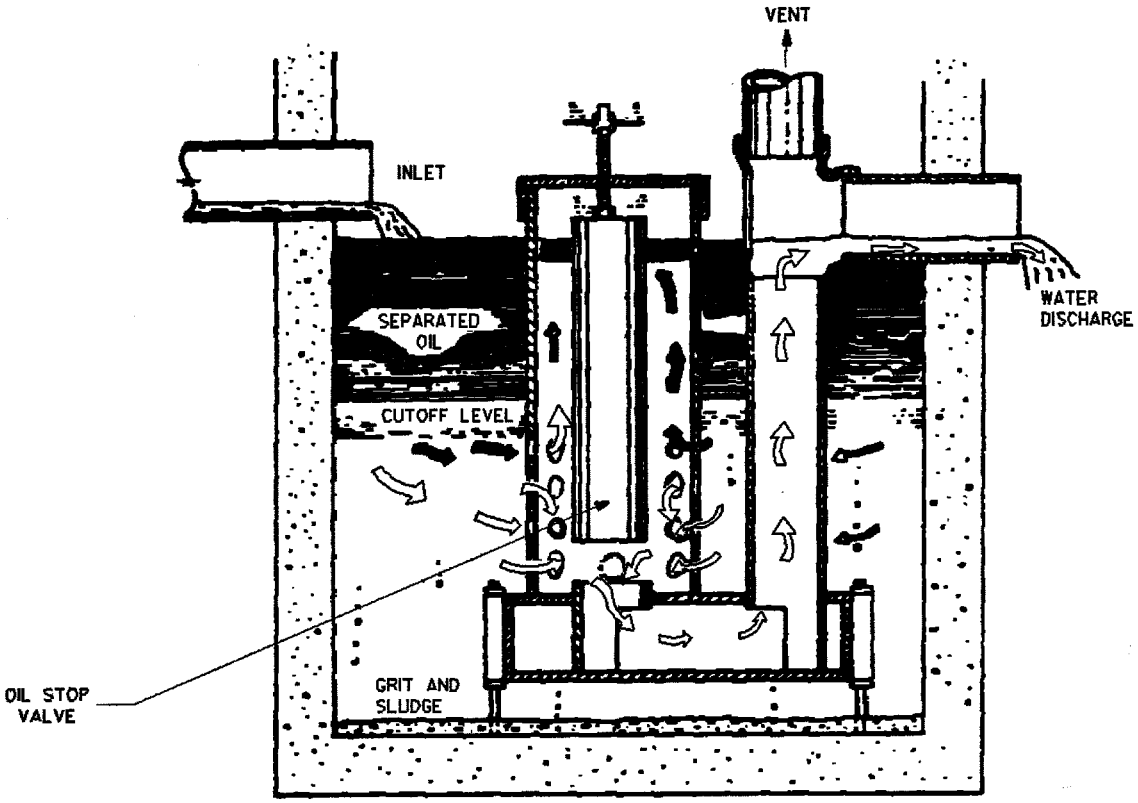

Figure 15— Oil stop valve

Figure 16 illustrates a discharge control system consisting of an oil-detecting device and a pump installed in a sump connected to the collecting or retention pits of the oil-containment system. The oil-detecting device may use different methods of oil sensing (e.g., capacitance probes, turbidimeters, and fluorescence meters). The capacitance probe shown detects the presence of oil on the surface of the water, based on the significant capacitance difference of these two liquids and, in combination with a logic of liquid level switches, stops the sump pump when the water-oil separation layer reaches a preset height in the sump. Transformer low oil level or gas protection can be added into the control diagram of the pump in order to increase the reliability of the system during major spills.

Some containment systems consist of collecting pits connected to a retention pit or tank that have no link to the drainage system of the substation. Discharge of the liquid accumulated in these systems requires the use of permanently installed or portable pumps. However, should these probes become contaminated, they may cease to function properly. These pumps are manually activated by operating personnel. This system requires periodic inspection to determine the level of water accumulation. Before pumping any accumulated liquid, an inspection is required to assess if the liquid to be pumped out is contaminated.

Copyright © 1998 IEEE All Rights Reserved

Copyright The Institute of Electrical and Electronics Engineers, Inc.
Provided by IHS under license with IEEE
No reproduction or networking permitted without license from IHS Not for Resale

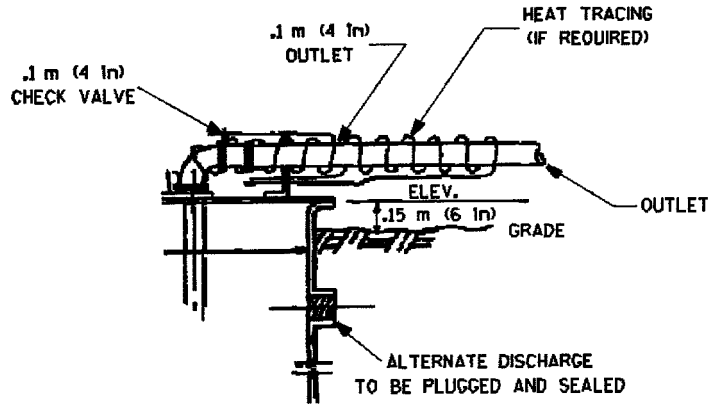

DETAIL A
ABOVE-GRADE DISCHARGE

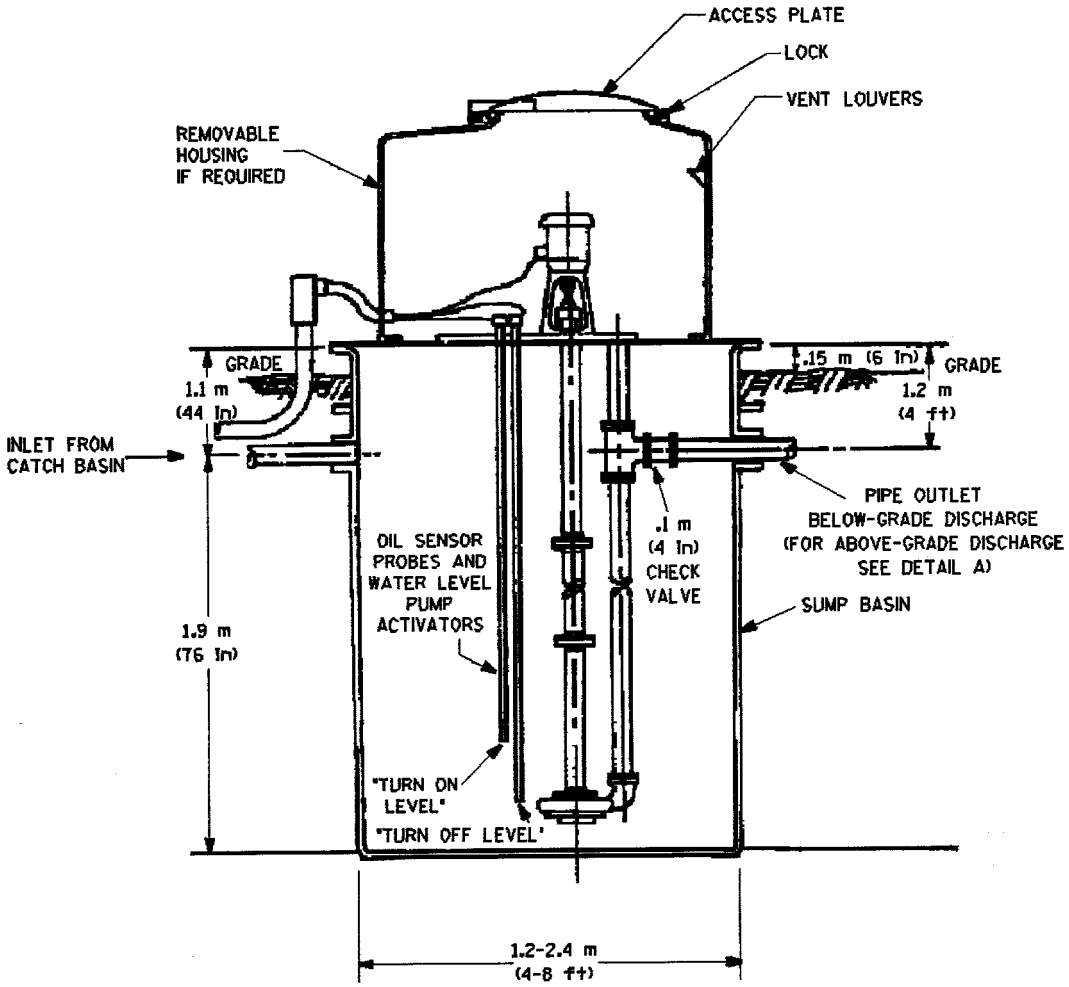

Figure 16— Sump pump water discharge (with oil-sensing probe)

Copyright © 1998 IEEE All Rights Reserved

Copyright The Institute of Electrical and Electronics Engineers, Inc.
Provided by IHS under license with IEEE
No reproduction or networking permitted without license from IHS
Not for Resale

Figure 17 illustrates the discharge control system using an in-line, manually operated, normally closed valve. This valve is opened to drain water from the containment pit after it has been determined that no oil is present. It is generally applied in the bottom of shallow containment pits. If used in cold weather areas, freezing of the valve is normally not a problem since moisture content from snow accumulation is usually less than the rainfall amount used to determine the height of the curb. Care should be taken to keep the containment drained just prior to winter freezing. Close attention will also be needed in the spring when melting of the snow and ice and spring rains may require more frequent draining of the containment system.

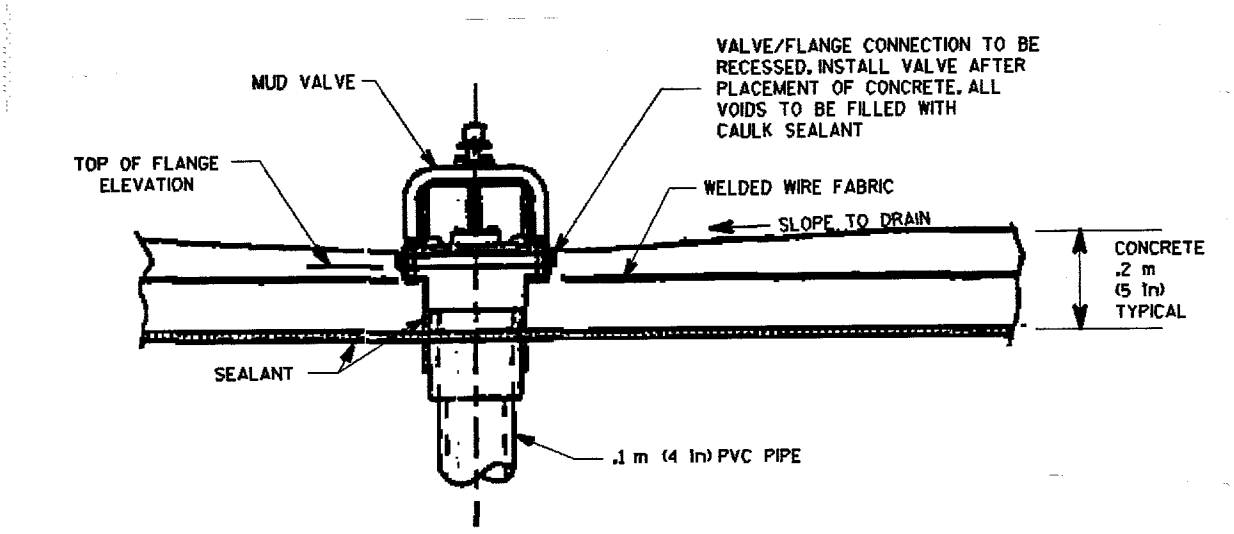

Figure 17— Mud valve

7.3 Soil characteristics and liners

Soil is largely nonhomogeneous, possessing a wide range of physical properties. Of these properties, the soil's drainage characteristic, termed permeability, is the primary concern in the design of oil-containment facilities. Permeability is a property of soil that denotes its capacity to conduct or discharge fluids under a given hydraulic gradient; it is measured as a flow rate in centimeters per second. Coarse-grained soils are considered highly pervious and have corresponding high permeability coefficients, while fine-grained soils have low permeability coefficients. All conditions being equal, the higher the coefficient of permeability, the faster a fluid will drain through the soil.

For the purposes of this guide, soils and their permeability characteristics have been adapted from typical references and can be generalized as in table 4.

Table 4— Soil permeability characteristics

Permeability (cm/s)	Degree of permeability	Type of soil
Over 10^{-1}	High	Stone, gravel, and coarse- to medium-grained sand
10^{-1} to 10^{-3}	Medium	Medium-grained sand to uniform, fine-grained sand
10^{-3} to 10^{-6}	Low	Uniform, fine-grained sand to silty sand or sandy clay
Less than 10^{-6}	Practically impermeable	Silty sand or sandy clay to clay

Consideration should be given to sealing or lining any collecting or retention pit if migration of discharged oil into underlying soil layers is to be prevented. The installation of a liner of low permeability such as a layer of clay

Copyright © 1998 IEEE All Rights Reserved

Copyright The Institute of Electrical and Electronics Engineers, Inc.
Provided by IHS under license with IEEE
No reproduction or networking permitted without license from IHS
Not for Resale

(i.e., volclay/bentonite), or a rubber or plastic liner in the pit is a reasonable means of slowing oil movement and enhancing containment. Spray-on materials such as fiberglass have also been utilized as a liner material. When a pit is lined, consideration should be given to the removal of accumulated water. Based on the 1992 IEEE survey results, users typically either line all of their pits or are very selective and line less than 25% of their pits. Over 42% of the utilities responding said that they evaluate the soil characteristics to determine if a pit should be lined. As with the containment systems, the type of liner used seems to be governed primarily by user preference. All of the liners listed in table 5 have been applied with success.

Table 5— Containment pit liners

Liner type	No. of utilities that use this type of liner	No. of years experience with the liner
Concrete	20	Up to 60 years
Plastic	12	Up to 19 years
Rubber	9	Up to 20 years
Volclay/bentonite	8	Up to 20 years

7.4 Fire quenching considerations

In places where the oil-filled device is installed in an open pit (not filled with stone), the possibility of a pool fire should be considered. If a major discharge occurs and the pooled oil in the pit catches on fire, the equipment will likely be destroyed. Based on the 1992 IEEE survey, only a few utilities altered their containment practices because of a pool fire possibility, deciding instead that the risk was acceptable due to the low probability of the event. Those that do address this concern employ active or passive quenching systems, or drain the oil to a remote pit. Active systems include foam or water spray deluge systems.

Of the passive fire quenching measures, pits filled with crushed stone are the most effective. The stone-filled pit provides a fire quenching capability designed to extinguish flames in the event that a piece of oil-filled equipment catches on fire. An important point that should be noted is that in sizing a stone-filled collecting or retention pit, the final oil level elevation (assuming a total discharge) should be situated approximately 0.3 m (12 in) below the top elevation of the stone. The use of 3.8 cm (1.5 in) or larger diameter stone (washed and uniformly sized) should be considered to permit quicker penetration by the oil to avoid a pool fire.

The drain pipe material should be capable of withstanding the higher temperatures associated with an oil fire without melting. If the pipe melts, the oil will be unable to drain away from the burning equipment, and the melted pipe may pose an environmental hazard.

7.5 Volume requirements

Before a substation oil-containment system can be designed, the volume of oil to be contained must be known. Since the probability of an oil spill occurring at a substation is very low, the probability of simultaneous spills is extremely low. Therefore, it would be unreasonable and expensive to design a containment system to hold the sum total of all of the oil contained in the numerous oil-filled pieces of equipment normally installed in a substation. In general, an oil-containment system should be sized to contain the volume of oil in the single largest oil-filled piece of equipment, plus any accumulated water from sources such as rainwater, melted snow, and water spray discharge from fire protection systems. Interconnection of two or more pits to share the discharged oil volume may provide an opportunity to reduce the size requirements for each individual pit.

Expected rain and snow accumulations can be determined from local weather records. A severe rain storm is often considered to be the worst-case event when determining the maximum volume of short-term water accumulation (for

 Copyright © 1998 IEEE All Rights Reserved

Copyright The Institute of Electrical and Electronics Engineers, Inc.
Provided by IHS under license with IEEE
No reproduction or networking permitted without license from IHS Not for Resale

design purposes). From data reported in the 1992 IEEE survey, the storm water event design criteria employed ranged from 5–20 cm (approximately 2–8 in) of rainfall within a short period of time (1–24 h). The EPA recommends that the rainwater design criteria be based on a 25-year storm event. The total volume of water from a storm water event should be compared with the water available from a fire spray deluge system to determine the worst-case water volume to be used in the containment system design. Based on the survey results, 79% of the 34 responding utilities said that their containment pits are designed to hold either 50–100% (15 utilities) or 100–125% (19 utilities) of the unit's oil volume. Consideration should be given to the fact that in the future a larger piece of equipment may be placed in service at the same location.

For collecting pits that are filled with stone, consideration should be given to the size of stone and its corresponding porosity. Based on the survey results, over 88% of the responding utilities filled the pits located directly under oil-filled equipment with crushed rock or stone. The size of the stone used varied, with figures in the range 1.9–7.6 cm (0.75 in to 3.0 in) most common. Depending on the uniformity of stone size used, the void volume ratio may vary from 20–50%. In general, the smaller the particles, the greater the volume of voids. Some users surveyed expressed concern that pits with small stones can become plugged by silt accumulation, indicating that larger stones may be more suited for oil-containment areas. Of fundamental importance, though, is the need to use washed and uniformly sized stone. While it is possible to attain a void volume ratio of 50%, a design figure of 35% is more feasible. See annex B for an example of how to calculate the size of a collecting pit.

7.6 Warning alarms and monitoring

In the event of an oil spill, it is imperative that cleanup operations and procedures be initiated as soon as possible to prevent the discharge of any oil, or to reduce the amount of oil reaching navigable waters. Hence, it may be desirable to install an early detection system for alerting responsible personnel of an oil spill. Some governmental regulations may require that the point of discharge (for accumulated water) from a substation be monitored and/or licensed.

The most effective alarm would be one that is activated by the presence of oil in the containment system. Also, a low oil-level indicator within the oil-filled equipment can be used; however, it may not activate until 3–6% of the transformer oil has already discharged. In cases where time is critical it may be worthwhile to also consider a faster operating alarm such as one linked to the transformer sudden gas pressure relay. Interlocks should be considered as a backup to automatic pump or valve controls.

Other less critical maintenance alarms should also be considered where applicable. These include pump failure and high water-level alarms. Alarms should be transmitted via supervisory equipment or a remote alarm system to identify the specific problem. The appropriate personnel should then be informed so that they can determine if a spill has occurred and implement the SPCC contingency plan. The use of alarms and monitoring practices was surveyed. Only 14 of the responding utilities (24%) monitored the discharge point, and 9 utilities (15%) employed alarms at the discharge point.

7.7 Retrofitting techniques

Where older installations pose a potential environmental hazard, it may be necessary to install containment around existing equipment. For the 1992 IEEE survey results, see table 3. Retrofitting provides additional complications (and costs) that should be addressed. Some of these are as follows:

a) Power cable, control cable, conduit, grounding, and phone line relocations
b) Equipment outages
c) Equipment foundation repair
d) Deep excavations that can undermine shallow equipment foundations
e) Liner application around existing footings (special retrofit liners are available)
f) Contaminated soil disposal
g) Removal of bedrock
h) Reduced vehicle mobility (during and after construction)

Copyright © 1998 IEEE All Rights Reserved

Copyright The Institute of Electrical and Electronics Engineers, Inc.
Provided by IHS under license with IEEE
No reproduction or networking permitted without license from IHS Not for Resale

To minimize the effect of these complications, it is advisable to consider a design that requires minimal excavation in proximity to the equipment. Shallow containment pits with piping to a common oil-retention pit or discharge control system may be the preferred method for retrofits. Equipment does not always need to be removed from the foundation to install this type of oil containment. If equipment foundation replacement is necessary to accommodate larger equipment, oil-containment designs can be altered to take advantage of the opportunity for larger excavation, and any of the containment systems described in 7.1 and 7.2 can be utilized.

Where excavation is impractical or too costly, an improvement in containment could be accomplished by the addition of berms around the existing equipment. Shallow installation of impervious liner and berms constructed of low permeability soil can be effective.

7.8 Maintenance of oil-containment systems

One design criteria of any oil-containment system should be the minimization of maintenance requirements. However, to ensure that containment facilities are effective in the event of a spill, some prudent maintenance practices are required.

Maintenance of oil-containment system components should involve the following:

a) Regular inspection of associated manholes, standpipes, etc., and cleaning out of debris and/or pumping out of excess standing water.
b) Regular inspection of systems that require the presence of water to function effectively to ensure that the minimum level of water is present.
c) Regular inspection of discharge lines to ensure that no external blockage world restrict water flow.
d) Yearly operational inspection of piping either during or immediately after a significant rainfall or weather event to assess performance of the system. If indications are that the system is not functioning, manual flushing of drain lines may be required.
e) Regular inspection of open containment pits and pumping out any excess water (maintaining any minimum water level required) to prevent stagnation during dry periods; to discourage nesting or other activity by birds, rodents, and insects; and to maintain maximum capacity and function of the oil-containment system.
f) Yearly inspection of berms around oil-containment pits to ensure that erosion or foot and vehicle traffic has not caused a breech in the berm.
g) Seasonal inspection of oil-containment facilities during prolonged cold periods accompanied by large snowfalls and ice buildup. In the event of an oil spill, it may be possible for oil to initially flow on top of the ice and overflow the oil-containment system.
h) Regular inspection and sampling of the system to check for the presence of oil contamination.
i) Manufacturers' instructions on equipment maintenance should be closely followed. The following items are required regularly as a minimum:
    1) *Separators*. Remove sludge yearly.
    2) *Filters and oil-absorbing polymer beads*. Clean or replace as required.
    3) *Pumps and valves*. Check operation annually if not continuously monitored.
    4) *Oil probes, monitoring equipment, and alarms*. Check operation twice annually. Recalibrate every 2 years. Teflon probes should not require cleaning.

8. Control and cleanup

In the event of a spill, control of the oil flow will be required, and even where secondary containment is successfully employed, some cleanup will be required. It is the function of the SPCC plan to ensure that all relevant aspects of the control, containment, and cleanup have been planned for and are executed correctly at the time of the spill. Even where secondary containment is not required, the proposed 40CFR, Part 112 regulations have placed increased emphasis on the need for an SPCC plan (probably site specific). Over 88% of the utilities who responded to the 1992

 Copyright © 1998 IEEE All Rights Reserved

Copyright The Institute of Electrical and Electronics Engineers, Inc.
Provided by IHS under license with IEEE
No reproduction or networking permitted without license from IHS Not for Resale

IEEE survey have SPCC plans in place. Of those utilities, 49% have site-specific plans, 42% have one company-wide plan in effect, and 9% utilize both types of plans.

8.1 Typical SPCC plan requirements

Detailed guidelines for the preparation and implementation of an SPCC plan are provided in 40CFR, Part 112.7. While the SPCC plan focuses on containment of oil and requires specific information about past oil spills, location of equipment, sources of potential spills, quantities of oil that could be discharged, drainage pattern, rate of flow, and containment measures, one of the important requirements of the SPCC plan is the contingency plan for cleanup if a spill occurs. If an oil spill occurs, procedures outlined in this plan should be activated. Another important function of the SPCC plan is its ability to demonstrate to local, state, and federal authorities that the user has addressed the problem of oil spills and installed effective containment and control measures, and is prepared to act in the event a spill should occur.

8.1.1 Categories

For the purposes of the SPCC plan, substations are classified into the following two categories:

Category A Substations or facilities where, due to their location, or quantities of oil involved, it is unreasonable to expect that a discharge of oil would reach navigable waters as defined in 40CFR, Part 112.1. A general plan applicable to all facilities in this category may be acceptable.

Category B Substations or facilities where, due to their location, or quantities of oil involved, it is possible for a discharge of oil to reach navigable waters. A site-specific plan for each location in this category should be prepared. The general SPCC plan will also apply to these facilities.

It may also be desirable to further categorize the type of spill, enacting different procedures depending on the magnitude of the spill. For example, some utilities surveyed categorized their spills as a) minor spills (slow leaks), b) major spills contained on site, and c) major spills not contained on site.

Over 45 typical SPCC plans were returned with the 1992 IEEE survey. Each utility's SPCC plan will be different, written to reflect that utility's own unique requirements. However, the items described below were common to the majority of the plans returned with the survey, and they represent a compilation of those found in a typical SPCC plan. This list is representative of the items that should be considered when developing an SPCC plan.

a) General information
   1) Introduction, purpose, and scope
   2) Applicable local, state, and federal regulations
   3) Applicable corporate policies and procedures
   4) Requirements for review and approval, both by management and a registered professional engineer (PE), and the SPCC updating procedures, including the maximum time interval between reviews
   5) Any certification requirements, including that by the PE
b) Identification information
   1) Substation name, type of facility, mailing address and street address (if different), legal description, phone number, and date and year that the facility began operation
   2) Applicable division, general office and corporate name(s), mailing address, and phone number(s)
   3) Name, title, and address for the designated spill prevention and control coordinator(s) including on-site coordinator, responsible supervisor, and applicable division and general office managers (operations, legal, environmental, public relations, etc.)
   4) Emergency 24-hour phone number(s) for the designated spill coordinator(s) and any on-site and management personnel that must be contacted immediately
   5) Map of the substation showing the relative location to the surrounding area (including major thoroughfares and directions to the substation), and any nearby waterways, wells, sewers, drains, ditches, or other facilities that could be impacted or contaminated by an oil spill

Copyright © 1998 IEEE All Rights Reserved

Copyright The Institute of Electrical and Electronics Engineers, Inc.
Provided by IHS under license with IEEE
No reproduction or networking permitted without license from IHS Not for Resale

6) Name, address, and 24-hour emergency phone number(s) of the designated spill cleanup contractor(s), state or EPA-issued ID number, and written documentation of emergency response arrangements
7) Designated non-company contacts (name, title, address, and 24-hour emergency phone numbers for each contact), including the EPA region office; coast guard; state officials; local governmental, health, fire, and police authorities; state police; and local wastewater treatment facilities

c) Material used or stored at substation
1) Name and trade name, for the oil and chemicals of concern
2) Physical characteristics of the oil and chemical including composition, concentration, and possible reactions with other mixtures
3) List of all the equipment containing oil, describing the number of units, quantities of oil present (including total maximum volume), unit identification, unit oil volume(s), PCB content, and type of tank or container
4) Map or site plan of the substation showing location of potential spills, spill discharge control points, and predicted direction and path of an oil spill (including transformers, circuit breakers, and other oil-filled electrical equipment; aboveground and belowground bulk storage tanks, alarms, and discharge points; floor drains; secondary oil containment; sump pumps; critical valves; etc.)
5) Security procedures and requirements

d) Spill control and cleanup
1) Staff training requirements, including specific methods of containment, frequency of training, guidelines for new employees, practice spill simulations, etc.
2) Spill cleanup procedures (including the employee assignments and the specific actions to be taken) describing the methods of containing and cleaning up oil spills, such as skimming, boom construction and deployment, use of special oil-absorbent materials, use of machinery or special tools, etc.
3) Spill cleanup equipment to be used including pumps, bulldozers, trenching machinery, miscellaneous hand tools, oil tanks and drums, timbers, pipe, hoses, burlap bags, sand, straw, oil-absorbent materials, oil booms, boats, stakes, and fencing, identifying its location and who to contact to obtain it (often a cleanup kit inventory will be provided listing quantity of each item required, stock numbers, etc.)
4) Spill incident reporting procedures (see annex A for a typical notification form) including step-by-step calling procedures for immediate and follow-up notifications) (often the telephone reporting procedure takes the form of a one-page flow chart), identification of required reports and written notification(s) and their timing (reports should include the location of the spill, material type and quantity spilled, extent of the spill, and action taken)
5) History and analysis of past spills at the facility including type and amount of oil spilled; location, date, and time of spill; water course affected and resulting damage; cause of spill; cost of the damage and cleanup; and actions taken to prevent future spills
6) Surveillance requirements including watch schedule, description of duties, and alarm procedures
7) Record keeping, testing, and inspection requirements, including inspection for oil leaks (tank integrity), of containment facilities and cleanup equipment

e) Secondary oil containment
1) Design, construction, physical features, materials used, intended function, and operation of all secondary containment facilities, including retention pits, valves, pumps, oil-water separators, diking, etc.
2) Volume requirements, dimensions, and calculations, including any special conditions or requirements that must be met to ensure proper operation of the containment system
3) Drainage requirements and restrictions, including release of accumulated water
4) Oil transfer procedures for pipelines, trucks, and oil-handling equipment
5) Maintenance requirements

8.1.2 Reporting procedure

An appreciable discharge of oil from transformers, circuit breakers, or other electrical equipment is a possible result of electrical failure of that equipment. These types of failures can be detected by alarms either directly from attended substations or transmitted by supervisory equipment, or by customer calls to dispatching centers as a result of

 Copyright © 1998 IEEE All Rights Reserved

--`,,`-`-`,,`,,`,`,,`---

Copyright The Institute of Electrical and Electronics Engineers, Inc.
Provided by IHS under license with IEEE
No reproduction or networking permitted without license from IHS Not for Resale

equipment outage. Slow leaks from electrical equipment or oil-storage facilities should be detected and corrected during periodic and routine inspections.

It is the responsibility of any employee visiting a facility to immediately report an oil spill to the local operating supervisor. Responsible personnel should also report to the U.S. Regional EPA Office and other local, state, or federal agencies as required for any discharge where there is a good probability that it can be classified as an oil spill (spill event).

8.1.3 Action to be taken in the event of an oil spill

See annex A for a typical notification form. A list of personnel to be contacted should also be included as an attachment to a cleanup plan. Action to be taken includes:

a) Determination of the source of the spill
b) Initiation of action to stop source of spill within the limits of training and experience (e.g., close necessary valves or temporarily plug holes to stop or control spill)
c) Determination of the approximate volume, size of the spill, and direction of flow
d) Notification of the local operating supervisor in the appropriate division, who should notify the designated representative
e) Containment of any oil spill by blocking flow to drains and waterways, digging diversion ditches, sandbagging, or through other means
f) Containment of any oil that has reached a waterway to prevent any further spreading downstream (by using booms or other means)
g) Cleanup of oil by using absorbent materials, pumping, and removing oil-saturated earth or stone, as required
h) Notification of state or local police for an oil spill reaching a public road

Oil spill cleanup material should be provided. Materials available and their respective locations should be listed as an attachment to the SPCC plan. For selected Category B substations (see 8.1.1), specific materials are located on-site to facilitate appropriate action to minimize effects of a spill.

8.2 Control and cleanup methods

The goal of any cleanup procedure is the protection of the environment against contamination. Prompt action is required whenever a spill has occurred. It is therefore most important that personnel involved with substation operations or maintenance be instructed in prompt notification procedures. All substation personnel should be instructed in steps that must be taken immediately to stop the source of the spill and other emergency measures that can be undertaken to prevent or control any discharge from the station. Typical-cleanup methods are shown in figures 18 through 27.

Copyright © 1998 IEEE All Rights Reserved

Copyright The Institute of Electrical and Electronics Engineers, Inc.
Provided by IHS under license with IEEE
No reproduction or networking permitted without license from IHS Not for Resale

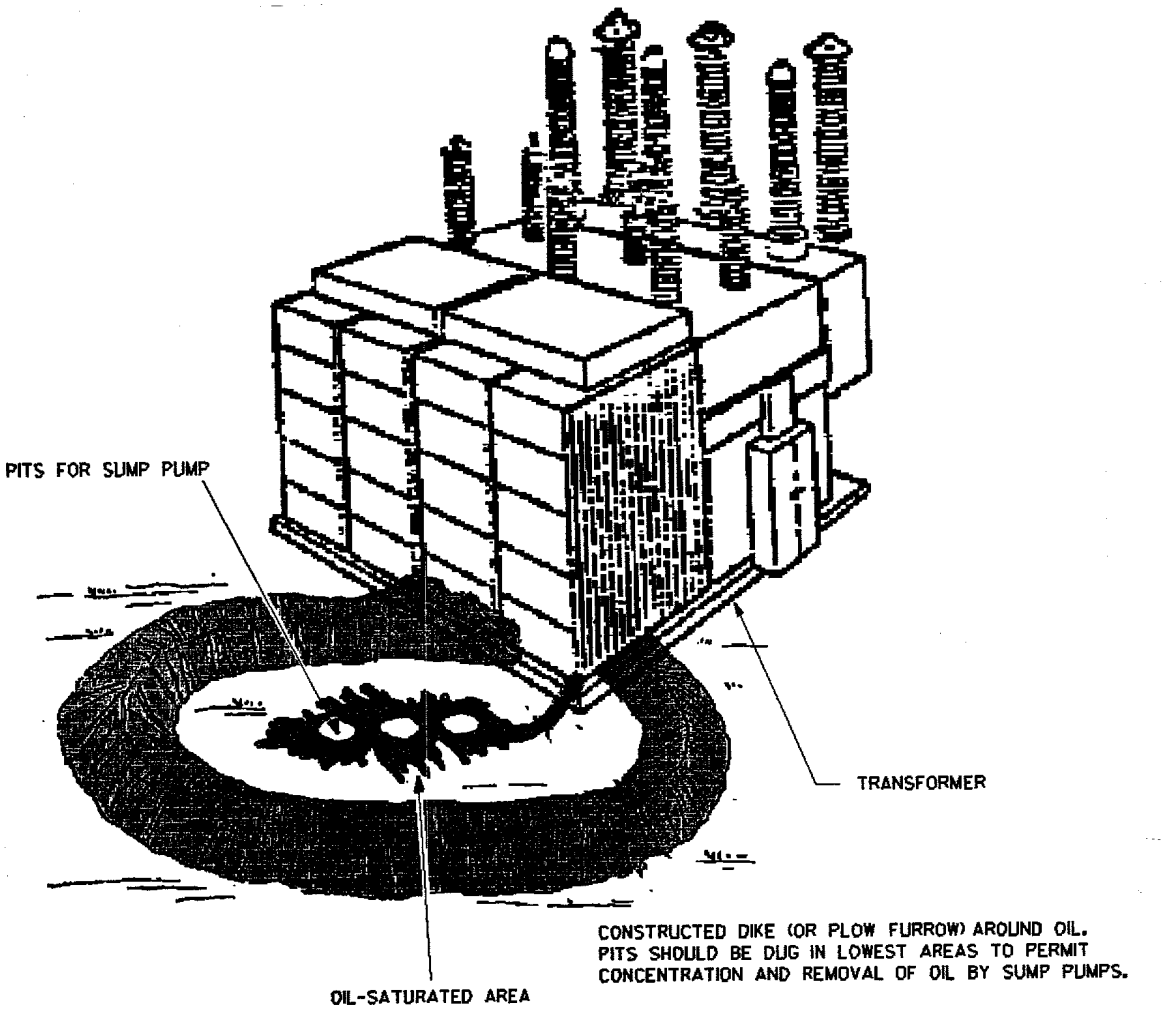

Figure 18— Oil-containment berm

Copyright © 1998 IEEE All Rights Reserved

Copyright The Institute of Electrical and Electronics Engineers, Inc.
Provided by IHS under license with IEEE
No reproduction or networking permitted without license from IHS
Not for Resale

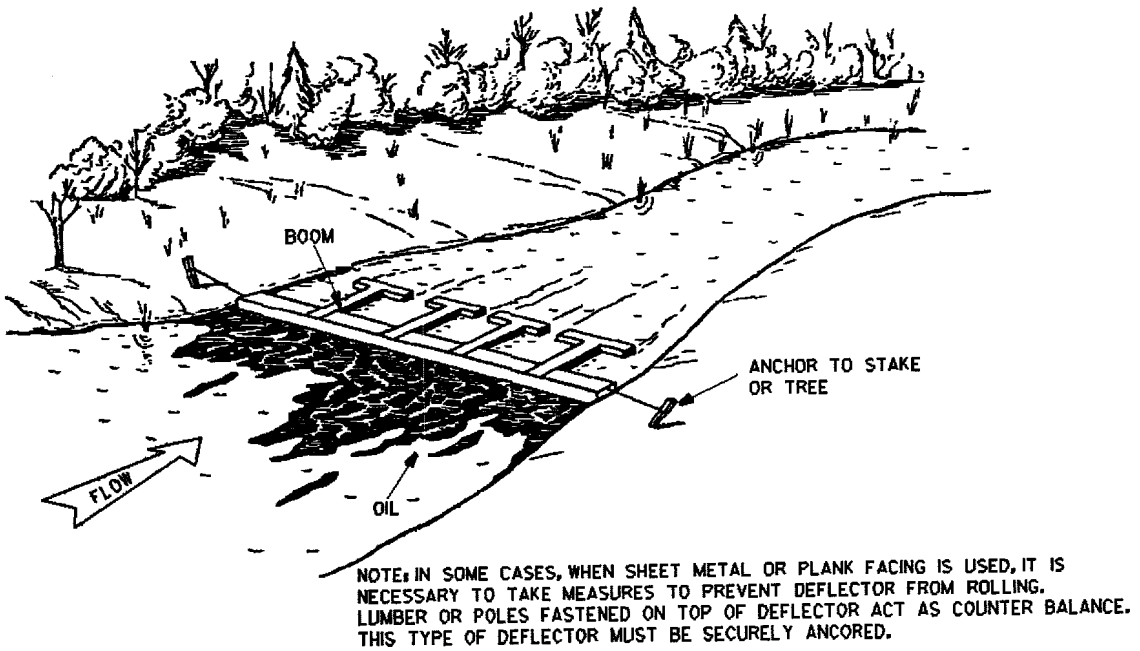

Figure 19— Boom deflector

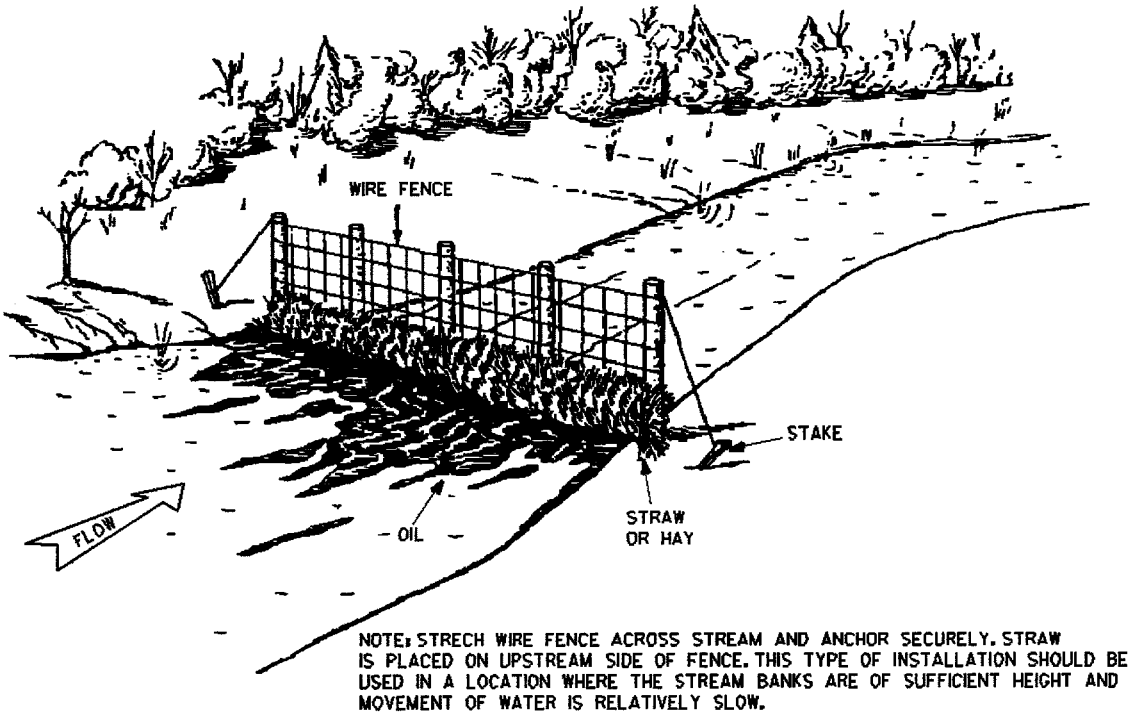

Figure 20— Straw skimming installation

Copyright © 1998 IEEE All Rights Reserved

Copyright The Institute of Electrical and Electronics Engineers, Inc.
Provided by IHS under license with IEEE
No reproduction or networking permitted without license from IHS
Not for Resale

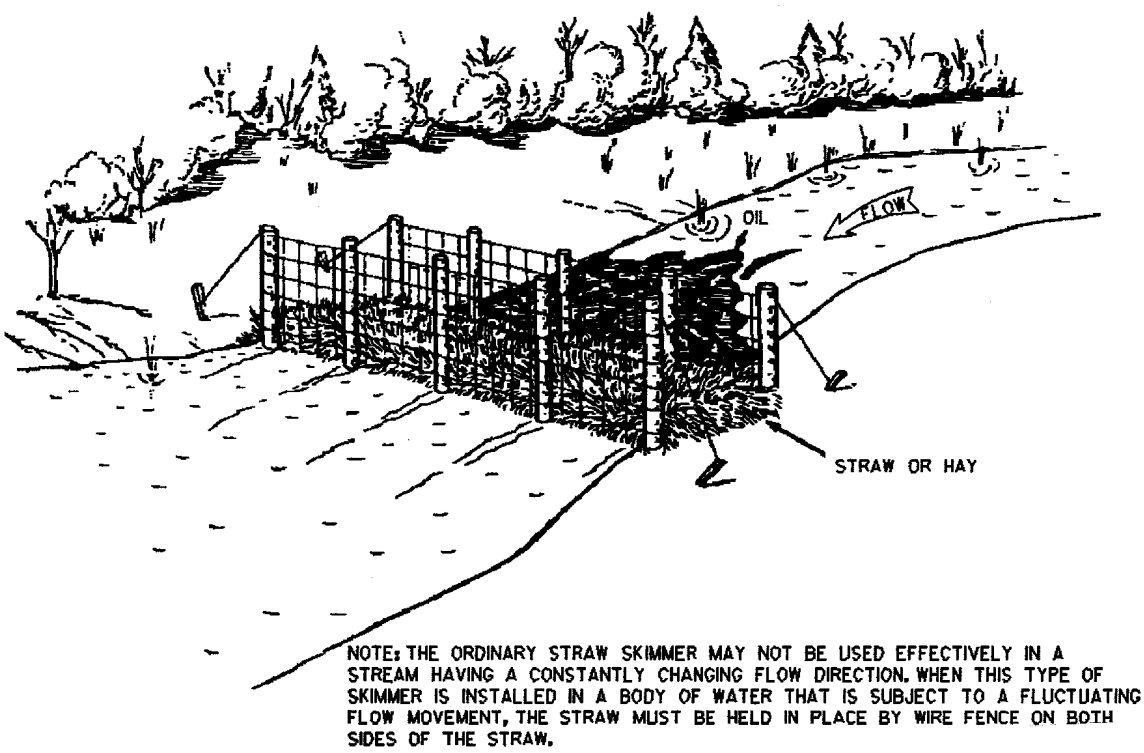

Figure 21— Straw skimmer for fluctuating stream flow

Copyright © 1998 IEEE All Rights Reserved

Copyright The Institute of Electrical and Electronics Engineers, Inc.
Provided by IHS under license with IEEE
No reproduction or networking permitted without license from IHS
Not for Resale

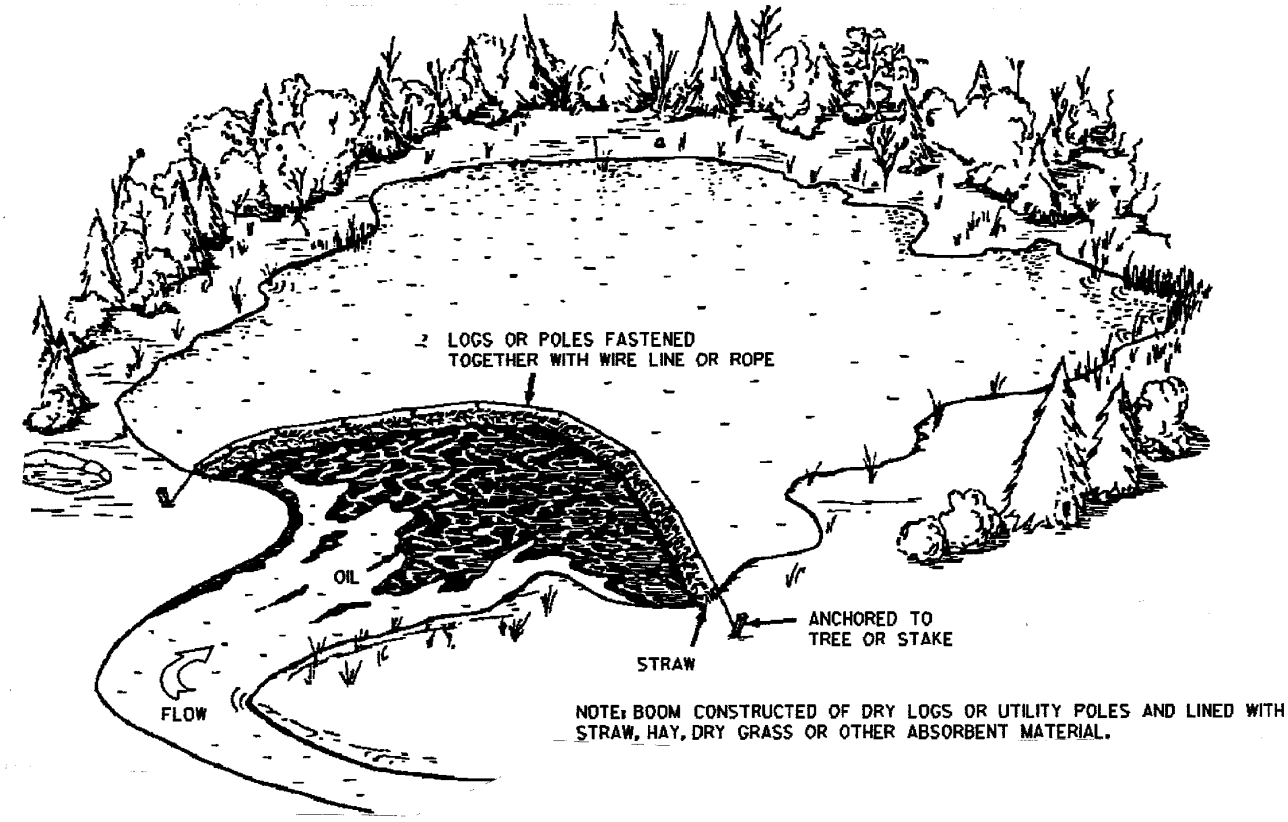

Figure 22— Oil loss in lake



Figure 23— Covering oil by sanding or absorbents

Copyright © 1998 IEEE All Rights Reserved

Copyright The Institute of Electrical and Electronics Engineers, Inc.
Provided by IHS under license with IEEE
No reproduction or networking permitted without license from IHS
Not for Resale

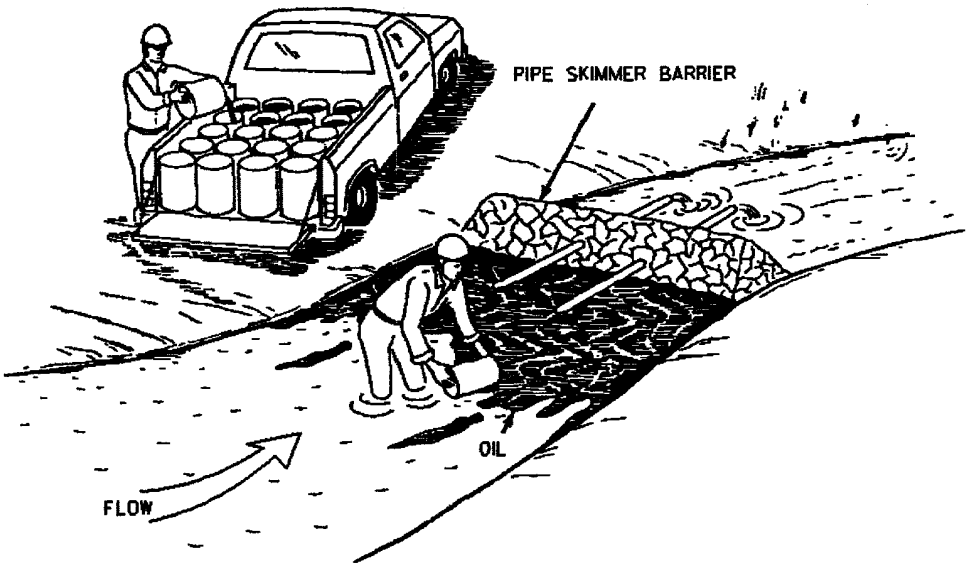

NOTE: IMPOUNDED OIL MAY BE REMOVED FROM A STREAM BY DIPPING OPERATIONS. SUCH MANUAL REMOVAL OF OIL FROM A STREAM MAY BE NECESSARY OR DESIRABLE WHEN PUMPING EQUIPMENT IS NOT AVAILABLE. THE OIL THUS REMOVED MAY BE DEPOSITED IN DRUMS AND TRUCKED AWAY FROM THE VICINITY OF THE STREAM TO BE SALVAGED OR BURNED IN A SAFE LOCATION.

Figure 24— Use of oil drums

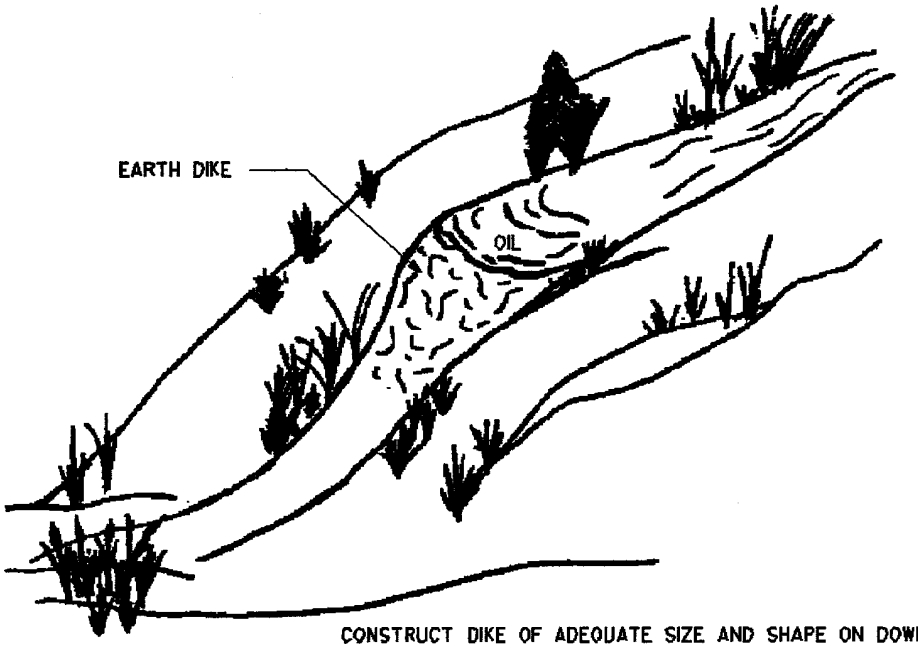

CONSTRUCT DIKE OF ADEQUATE SIZE AND SHAPE ON DOWN-GRADE SIDE OF OIL LOSS ON UNEVEN LAND. IF LAND IS ONLY GENTLY SLOPING, IT MAY BE NECESSARY TO DIG SUMP PITS OR TRENCHES FOR COLLECTION AND REMOVAL OF OIL. IF SLOPE OF LAND IS RADICAL, COLLECTION OF OIL IS NOT A PROBLEM EXCEPT THE DIKE USED TO PREVENT MOVEMENT OF OIL MUST BE VERY WELL CONSTRUCTED AND MAINTAINED DURING PERIOD FLUID IS IMPOUNDED.

Figure 25— Diking on sloped ground

Copyright © 1998 IEEE All Rights Reserved

Copyright The Institute of Electrical and Electronics Engineers, Inc.
Provided by IHS under license with IEEE
No reproduction or networking permitted without license from IHS
Not for Resale

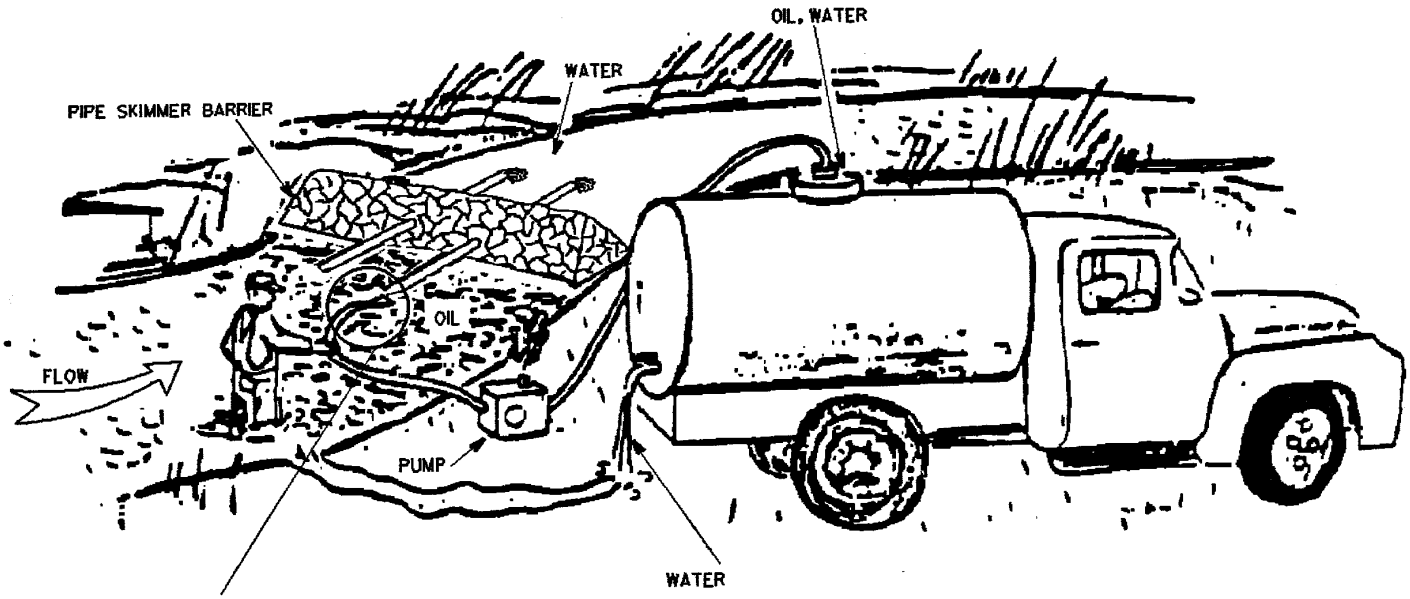

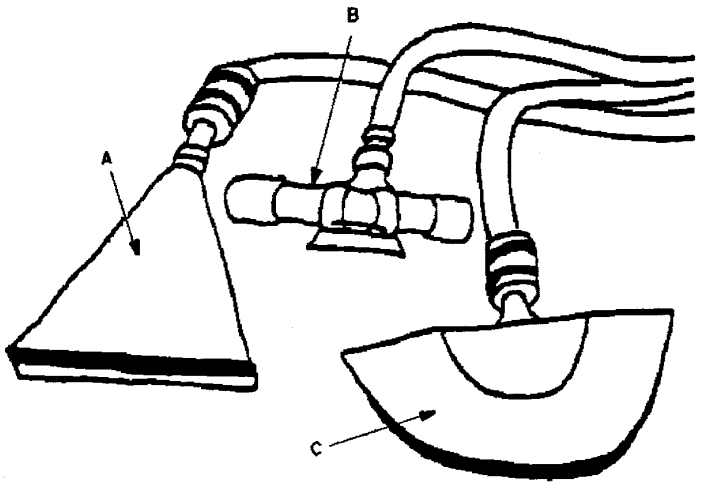

Figure 26— Use of tank truck

Copyright © 1998 IEEE All Rights Reserved

Copyright The Institute of Electrical and Electronics Engineers, Inc.
Provided by IHS under license with IEEE
No reproduction or networking permitted without license from IHS
Not for Resale

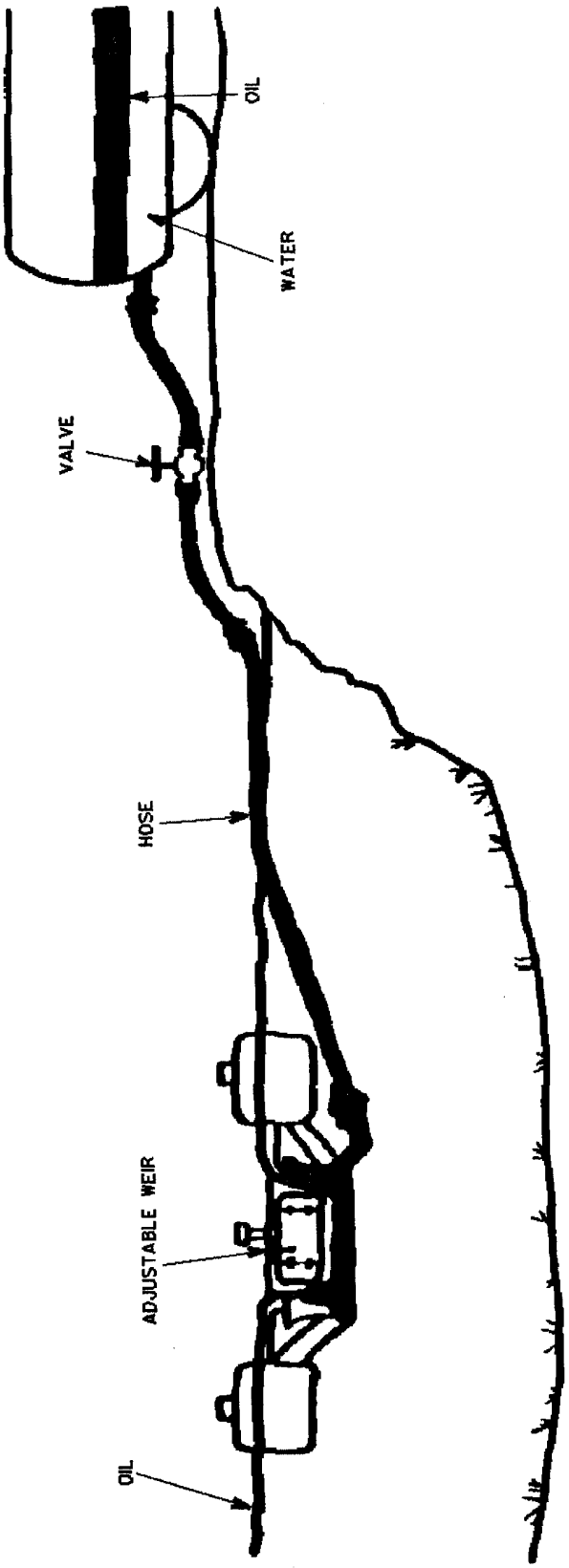

Figure 27— Weir skimmer operation

Copyright © 1998 IEEE All Rights Reserved

Copyright The Institute of Electrical and Electronics Engineers, Inc.
Provided by IHS under license with IEEE
No reproduction or networking permitted without license from IHS
Not for Resale

Table 6 lists the 1992 IEEE survey results showing which oil spill cleanup methods are employed and their effectiveness. As before, nearly all of the methods have been successfully utilized, with effectiveness ratings often approaching 100%. It should be noted that several utilities (over 16) pointed out that their primary cleanup method—absorbents in the form of blankets, pillows, pads, tubes, socks, booms, or blotters—was not listed in the survey. Further, the application of any of the techniques shown ultimately requires the removal of all rock and soil that has come in contact with the oil.

Table 6— Oil cleanup methods

Oil cleanup method	Figure no.	Utilities responding that	
		Utilize the method	Found it effective
River boom deflector	19	66%	93%
Berm	18	56%	100%
Dike on sloped ground	25	43%	92%
Cover with sand	23	40%	91%
Lake boom deflector	22	38%	100%
Straw skimming	20	23%	80%
Expanded straw skimming	21	13%	50%

8.2.1 Control methods

Control is the most important act in the removal of an oil spill, as it is used to prevent the spread of the oil, and thus minimizes environmental damage. Successful control is highly dependent on response time, which in turn is dependent upon many variables. Some are geographic features, equipment design, and availability of trained personnel. All substation personnel should be instructed in steps that must be taken immediately to stop the source of the spill and other emergency measures that can be undertaken to prevent or control a discharge from the station.

Typical control methods are:

a) *Booms*. A device placed on water to serve as a barrier to the movement of oil across a designated plane. There are many different types, shapes, and sizes of booms, which basically trap floatables at the surface while at the same time permit the flow of water under the boom. A typical boom installation is shown in figure 19.
b) *Control dams and berms*. Streams, creeks, and other small drainage channels are often too fast moving, and/or too steep-sided for proper boom deployment. For spills on these types of waterways, control dams, constructed from either earth or sorbent materials, offer a good choice for trapping oil. This is also a common method for controlling spills on land.
c) *Collecting agents*. Under favorable conditions, certain oil spills can be temporarily controlled by the use of chemicals. When applied to the surface, the chemicals will retard the spreading oil, and in fact, may even concentrate the spill. Wind, wave, and currents may hamper the use of collecting agents. The effectiveness of these agents is maximum in still waters.

8.2.2 Cleanup methods

Once an oil spill has been controlled, it should then be removed utilizing the most effective method—one that will incur the lowest cost and do the least harm to the ecology of the area.

Copyright © 1998 IEEE All Rights Reserved

Copyright The Institute of Electrical and Electronics Engineers, Inc.
Provided by IHS under license with IEEE
No reproduction or networking permitted without license from IHS Not for Resale

8.2.2.1 Cleanup on water

Removal of the oil from the surface of the water can be a complex task requiring a variety of methods. Typical methods utilize:

a) *Vacuum units*. Truck-mounted or smaller skid-mounted units are available. These units are expensive, mechanically complicated, and require proper maintenance to ensure availability. They are most effective when a spill has been controlled in thick pockets of relatively pure oil.

b) *Skimmers*. These mechanical devices are designed to remove oil from the surface and are available in two basic types:
   1) *Enlarged suction head skimmers*. These skimmers float on the surface with the suction opening at the oil-water interface. These units will operate in shallow water but they are subject to being clogged by debris. These are relatively low-cost skimming units (see figure 26).
   2) *Floating weir skimmers*. These skimmers float on water and permit oncoming oil to pass over an adjustable weir plate onto an area where the oil is confined and then sucked or pumped off (see figure 27).

c) *Sorbents*. Materials are available that are oleophilic and hydrophobic having a high capacity for absorbing or adsorbing an oil product and repelling water. Sorbents can be classified as a mineral product, a natural (organic or agricultural) product, or a manufactured (synthetic) product. Examples of each are:
   1) *Mineral products*. Volcanic ash, diatomaceous earth, vermiculite, perlite, and some chalks
   2) *Natural or agricultural products*. Straw, grass (hay), cane, cotton seed hulls, corn cobs, peat moss, sawdust
   3) *Synthetic products*. High molecular weight polymers

8.2.2.2 Cleanup on land

Oil absorbed by the soil above the water table may be treated in several ways, depending upon the nature of the soil and product. If the spill area is shallow with a clay or water seal along the bottom, flushing with water will, with limited effectiveness, float the oil from the soil. Although rarely employed, natural sorbents, such as sawdust, hay, or ground corn cobs, mulched into the soil, have been used where other cleanup methods have proven ineffective. After having been mixed into the soil, the sorbents are removed by a water stream, collected, and disposed of. In frozen soils, high-pressure water to dissolve oil or steam cleaning to lower oil viscosity is used to float oil with only minor damage to plants.

A method of treating soil contaminated with oil is simply allowing the oil to biodegrade. The success of this method depends on the oil toxicity, available nutrients, available water, ambient temperature, and oxygen availability. Techniques that can be used to increase biodegradation rate include tilling, drainage, aeration, and the addition of fertilizer, lime, or bacteria. If the oil depth is shallow, disking and adding fertilizer can add oxygen and nutrients that will increase the rate of conversion of the oil to carbon dioxide and water (by the bacteria). Repeated treatments will usually be necessary.

Oil deeper in the ground, below the aerobic bacterial zone, may be degraded by air pumped into the ground. For small spill areas, soil aeration by pumping air through drilled holes can oxidize volatile hydrocarbons and increase aerobic bacteria degradation. This technique may sterilize the soil.

Although the above techniques can be used to clean up spills, many times the generally accepted method to clean up oil spills on land is simply to remove the contaminated soil, stone, etc., and dispose of it properly.

8.3 Disposal

Contaminated materials such as oil-soaked gravel, soil, rags, and sorbent materials should be handled and disposed of carefully. The area of each company responsible for environmental issues should be contacted for the proper disposal

 Copyright © 1998 IEEE All Rights Reserved

Copyright The Institute of Electrical and Electronics Engineers, Inc.
Provided by IHS under license with IEEE
No reproduction or networking permitted without license from IHS Not for Resale

method. If a cleanup contractor is utilized, that contractor should also be consulted as to the proper methods for disposal of the various contaminated materials. Recycling is an option that could be considered. Disposal methods and sites will vary based on the regional environmental regulations that may apply.

Costs associated with disposal can vary widely. Typical components to be considered are the transportation, disposal fields, load verification, insurance surcharge, and the container unit costs.

8.4 Maintenance of equipment

A yearly inspection of all oil cleanup materials (i.e., booms, sorbents, etc.) should be conducted. Each manufacturer's recommended storage conditions and shelf life should be reviewed to determine the material's usability in the event of an oil spill. A record of the yearly inspections should be kept with the SPCC plans relevant to that site (at the site or at corporate headquarters). If the inspection reveals a need to replace outdated or damaged cleanup materials, a follow-up inspection should occur within one month to ensure that materials have been replaced.

If a vacuum unit is purchased and kept on the system for quick response to oil spills, proper maintenance should be performed to ensure its availability when needed. Yearly operation of the unit may be necessary to ensure functionality.

Copyright © 1998 IEEE All Rights Reserved

Copyright The Institute of Electrical and Electronics Engineers, Inc.
Provided by IHS under license with IEEE
No reproduction or networking permitted without license from IHS Not for Resale

Annex A Typical notification form and spill report[4] (Informative)

Date_____

(1) Name of company:_____

(2) Date of spill:_____

(3) Time of spill:_____

(4) Location of spill (City/Town, County, State):_____

(5) Time and location where samples were taken:_____

(6) Total quantity spilled ____ liters (gallons) of ____ (type of material)

(7) Name of receiving body of water:_____

(8) Quantity reaching the water body:_____ liters (gallons)

(9) Description of spill (probable source, cause of spill, and extent):_

_____

(10) Actions initiated to contain or clean up:_____

_____

_____

_____

(11) Measures that can be taken to prevent future spills:_____

_____

_____

_____

(12) Person(s) to contact on scene:

Name(s)_____

Phone number(s)_____

(13) Report initiated by:_____

Name_____

Title_____

Phone_____

(14) EPA person notified:

Name_____ Date _____ Time _____

Title_____

Phone_____

(15) Other person(s)/agencies notified (Fire, Police, company legal department, company environmental department, company public affairs):

Name_____ Date _____ Time _____

Title_____

Phone_____

(16) Date and time spill cleanup was completed _____

[4]This is a general form representing a compilation of items found in a typical notification form and spill report. Each user's form will be different, written to reflect the user's own unique requirements.

Copyright © 1998 IEEE All Rights Reserved

Copyright The Institute of Electrical and Electronics Engineers, Inc.
Provided by IHS under license with IEEE
No reproduction or networking permitted without license from IHS Not for Resale

Annex B Collecting pit volume calculation (Informative)

As an example, assume a collecting pit filled with large stones [assume 3.8 cm (1.5 in) diameter rock providing a 35% void volume ratio] that is designed to contain 50 000 kg (110 000 lb) of oil. Also, assume that the pit is dry before the discharge occurs, and that no liquid will leave the pit during the period of the oil discharge. The size of the collecting pit needed to provide a fire quenching capability and the needed volume for oil containment can be calculated as follows.

The area encompassed by the arrangement of the transformer, its coolers, and its conservator tank is presented in figure B.1. The pit extends a minimum of 1.5 m (5 ft) beyond any part of a transformer filled with oil (see 7.1), resulting in a minimum pit area of 13.0 m × 15.0 m (42.6 ft × 49.2 ft), or 195 m^2 (2096 ft^2). However, the area within the pit occupied by equipment foundations is approximately 18 m^2 (194 ft^2), reducing the effective containment area to 177 m^2 (1902 ft^2).

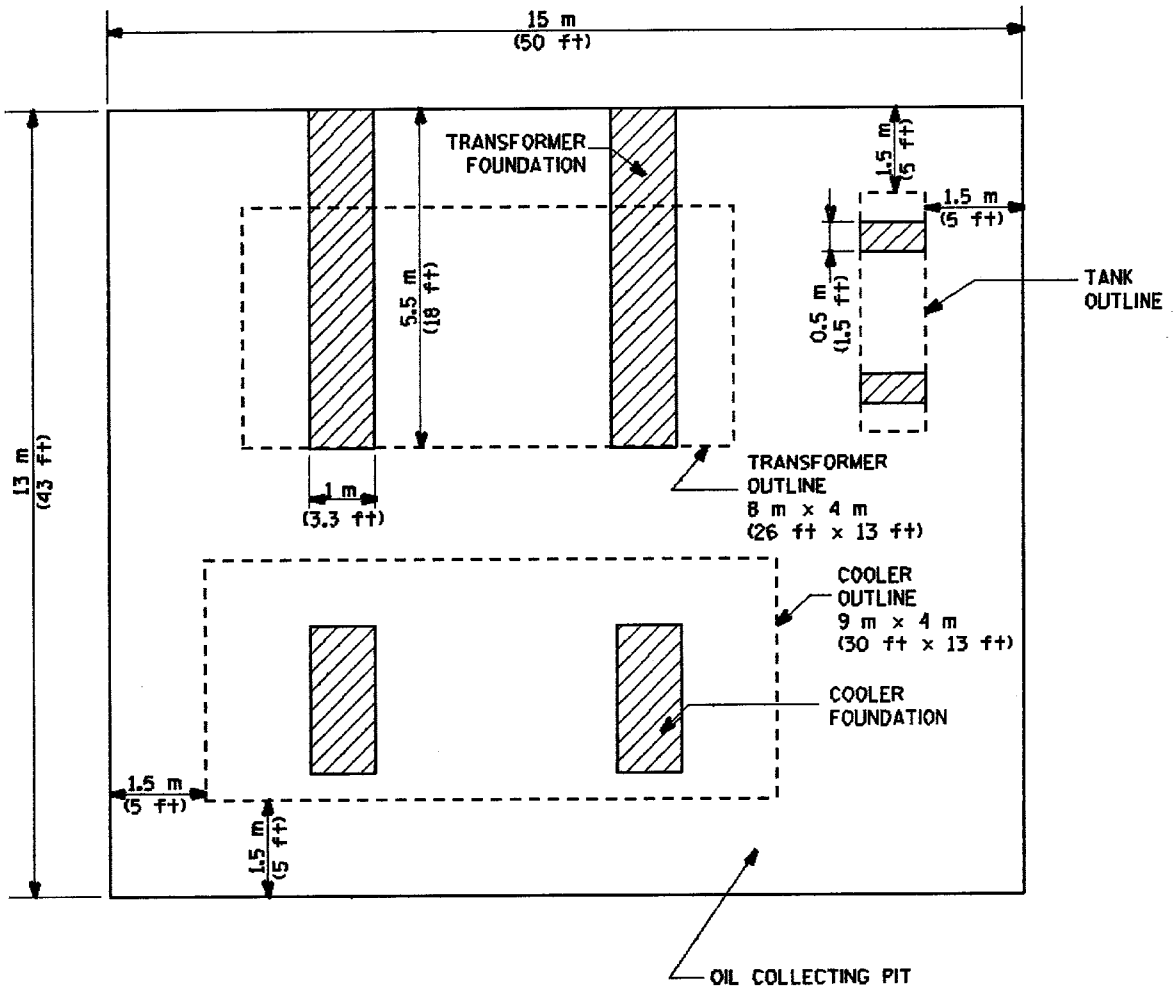

Figure B.1—Oil-collecting pit

The volume of oil in the transformer is 60 m^3 (2117 ft^3), which is calculated by multiplying the 50,000 kg (110,000 lb) of oil in the transformer by the 833 kg/m^3 (52 lb/ft^3) density of oil factor. The volume of water (from rain or a water spray deluge system—whichever is greater) has to be added to the volume of oil. This example assumes that no

Copyright © 1998 IEEE All Rights Reserved

Copyright The Institute of Electrical and Electronics Engineers, Inc.
Provided by IHS under license with IEEE
No reproduction or networking permitted without license from IHS Not for Resale

deluge system is present and that a 30 mm (1.18 in) rain will fall during the duration of a discharge. Therefore, the volume of water is 5.9 m^3 (209 ft^3), which is calculated by multiplying the entire area of the pit (including foundations) by 0.03 m (0.1 ft). The resulting total volume of oil and water is 65.9 m^3 (2326 ft^3). The pit volume required to contain this volume of liquid in the voids of stones is 188.3 m^3 (6646 ft^3), which is based on the total volume of oil and water divided by the void volume ratio of the crushed stone.

The pit depth needed to meet the containment requirements is 1.06 m (3.5 ft), which is calculated by dividing the total volume requirements of 188.3 m^3 (6646 ft^3) by the 177 m^2 (1962 ft^2) effective containment area of the pit. An additional 0.3 m (12 in) of quenching stone is added to avoid a pool fire, which brings the depth of the stone layer to 1.36 m (4.5 ft). The top of the stone layer will normally be at the same elevation as that of the finished grade outside the pit (see figure 4). An additional 0.3 m (12 in) of curb (located above finished grade elevation) around the pit could also be added to protect the pit filled with stones against silting by yard gravel and sand. The depth of the pit should take into consideration the possibility of freezing temperatures, because coarse crushed stone does not provide protection against frost penetration of foundations.

Copyright © 1998 IEEE All Rights Reserved

Copyright The Institute of Electrical and Electronics Engineers, Inc.
Provided by IHS under license with IEEE
No reproduction or networking permitted without license from IHS Not for Resale

Annex C Bibliography (Informative)

[B1] Canadian Environmental Protection Act, RSC Chapter 34, 1992.

[B2] Canadian Fisheries Act, RSC Chapter F14, 1985.

[B3] Canadian Transportation of Dangerous Goods Act, RSC Chapter 16, 1988.

[B4] C. C. Lee, Environmental Engineering Dictionary, 2d Ed., 1992.[5]

[B5] Electric Power Research Institute, EPRI-FP-1,207, Disposal of PCBs and PCB-Contaminated Materials, 1979.[6]

[B6] U.S. Code of Federal Regulations, Title 40 (40CFR), Toxic Substances Control Act, Part 761, for PCB oils (above 500 ppm) and PCB-contaminated (50–500 ppm) oils.[7]

[B7] United States Department of Agriculture, REA Bulletin 65-3, 1981, Design Guide for Oil Spill Prevention and Control at Substations.[8]

[B8] U.S. Oil Pollution Act of 1990, enacted by Public Law 101-300, August 18, 1990.

[5]This document is available from Government Institutes, Inc., Rockville, MD 20850.
[6]This document is available from the Electric Power Research Institute, 3412 Hillview Avenue, P.O. Box 10412, Palo Alto, CA 94303.
[7]This document is available from the Superintendent of Documents, U.S. Government Printing Office, Washington, DC 20402.
[8]This document is available from USDA-REA, FAD, CCS, Room 2103-S, Washington, DC 20250 or from the Superintendent of Documents, U.S. Government Printing Office, Washington, DC 20402.

Copyright © 1998 IEEE All Rights Reserved

Copyright The Institute of Electrical and Electronics Engineers, Inc.
Provided by IHS under license with IEEE
No reproduction or networking permitted without license from IHS Not for Resale