*Recognized as an*
American National Standard (ANSI)

**IEEE Std 810-1987 (R2001)**

# IEEE Standard for Hydraulic Turbine and Generator Integrally Forged Shaft Couplings and Shaft Runout Tolerances

Sponsor
**Power Generation Committee**
of the
**IEEE Power Engineering Society**

Reaffirmed 14 May 2001

Approved 10 September 1987

**IEEE-SA Standards Board**

Approved 2 February 1988

**American National Standards Institute**

**Abstract:** Methods for blah blah blah are also included.
**Keywords:** sizing nickel-cadmium batteries, stationary applications

The Institute of Electrical and Electronics Engineers, Inc.
3 Park Avenue, New York, NY 10016-5997, USA

Copyright © 2001 by the Institute of Electrical and Electronics Engineers, Inc.
All rights reserved. Published xx Month 2001. Printed in the United States of America.

*Print:* ISBN 1-55937-740-2 SH11445
*PDF:* ISBN 0-7381-1101-5 SS11445

*No part of this publication may be reproduced in any form, in an electronic retrieval system or otherwise, without the prior written permission of the publisher.*

Copyright The Institute of Electrical and Electronics Engineers, Inc.
Provided by IHS under license with IEEE
No reproduction or networking permitted without license from IHS

Not for Resale

**IEEE Standards** documents are developed within the Technical Committees of the IEEE Societies and the Standards Coordinating Committees of the IEEE Standards Board. Members of the committees serve voluntarily and without compensation. They are not necessarily members of the Institute. The standards developed within IEEE represent a consensus of the broad expertise on the subject within the Institute as well as those activities outside of IEEE which have expressed an interest in participating in the development of the standard.

Use of an IEEE Standard is wholly voluntary. The existence of an IEEE Standard does not imply that there are no other ways to produce, test, measure, purchase, market, or provide other goods and services related to the scope of the IEEE Standard. Furthermore, the viewpoint expressed at the time a standard is approved and issued is subject to change brought about through developments in the state of the art and comments received from users of the standard. Every IEEE Standard is subjected to review at least once every five years for revision or reaffirmation. When a document is more than five years old, and has not been reaffirmed, it is reasonable to conclude that its contents, although still of some value, do not wholly reflect the present state of the art. Users are cautioned to check to determine that they have the latest edition of any IEEE Standard.

Comments for revision of IEEE Standards are welcome from any interested party, regardless of membership affiliation with IEEE. Suggestions for changes in documents should be in the form of a proposed change of text, together with appropriate supporting comments.

Interpretations: Occasionally questions may arise regarding the meaning of portions of standards as they relate to specific applications. When the need for interpretations is brought to the attention of IEEE, the Institute will initiate action to prepare appropriate responses. Since IEEE Standards represent a consensus of all concerned interests, it is important to ensure that any interpretation has also received the concurrence of a balance of interests. For this reason IEEE and the members of its technical committees are not able to provide an instant response to interpretation requests except in those cases where the matter has previously received formal consideration.

Comments on standards and requests for interpretations should be addressed to:

Secretary, IEEE Standards Board
345 East 47th Street
New York, NY 10017
USA

IEEE Standards documents are adopted by the Institute of Electrical and Electronics Engineers without regard to whether their adoption may involve patents on articles, materials, or processes. Such adoption does not assume any liability to any patent owner, nor does it assume any obligation whatever to parties adopting the standards documents.

--`,,`,,`-`-`,,`,,`,`,,`---

Copyright The Institute of Electrical and Electronics Engineers, Inc.
Provided by IHS under license with IEEE
No reproduction or networking permitted without license from IHS Not for Resale

## Foreword

(This Foreword is not a part of ANSI/IEEE Std 810-1987, IEEE Standard for Hydraulic Turbine and Generator Integrally Forged Shaft Couplings and Shaft Runout Tolerances.)

This standard details dimensions of integrally flanged shafts and couplings, such as are used for the connection between the generator and turbine in hydroelectric installations. It was originally developed by the American Society of Mechanical Engineers (ASME) in 1928 and approved for publication by the American Standards Association (ASA) in 1932. A revised version, sponsored by ASME, was approved by ASA in 1947 and identified as Standard B49.1.

Starting in 1953 the National Electrical Manufacturers Association (NEMA) undertook the sponsorship of the standard and a revised issue was approved in 1967 by the United States of America Standards Institute (USA Standards Institute superseded the ASA in 1966).

NEMA elected to withdraw their sponsorship of Standard B49.1 in 1985, and in 1985 the Institute of Electrical and Electronics Engineers (IEEE) agreed to sponsor it. The Hydroelectric Power Sub-committee of the IEEE Power Generation Committee undertook the task of reviewing, revising, and reissuing the standard.

NEMA also sponsored Standards MG 5.1, Large Hydraulic-Turbine-Driven Synchronous Generators and Reversible Synchronous Generator/Motor Units for Pumped Storage Installations and MG 5.2, Installation of Vertical Hydraulic-Turbine-Driven Generators and Reversible Generator/Motors for Pumped Storage Installations. Both of these standards contained tables concerning the "Allowable Runout Tolerance." Since MG 5.1 (rescinded in 1982) and MG 5.2 (rescinded in 1983) have been withdrawn by NEMA, these tolerance data have been included in this standard.

The working group wishes to acknowledge the contributions made to the standard by R. D. Handel and D. H. Hohnstein.

At the time this standard was approved, the members of the Working Group were as follows:

**D. J. Parker**, *Chair*

| | | |
|---|---|---|
| F. L. Brennan | P. S. Johrde | J. M. Quigley |
| D. L. Evans | | D. H. Thomas |



Copyright The Institute of Electrical and Electronics Engineers, Inc.
Provided by IHS under license with IEEE
No reproduction or networking permitted without license from IHS
Not for Resale

The following persons were on the balloting committee that approved this document for submission to the IEEE Standards Board:

W. W. Avril
M. S. Baldwin
J. H. Bellack
I. B. Berezowski
G. G. Boyle
F. L. Brennan
J. B. Cannon
R. W. Cantrell
R. L. Castleberry
E. F. Chelotti
R. E. Cotta
M. L. Crenshaw
D. J. Damsker
P. M. Davidson
D. Diamant
G. R. Engmann
W. M. Fenner
A. H. Ferber
N. R. Friedman
D. I. Gorden
R. K. Gupta
M. E. Jackowski
W. D. Jackson
J. H. Jones
C. E. Kneeburg
P. R. Landrieu
J. E. Leclair
P. A. Lewis
G. L. Luri
J. T. Madill
O. S. Mazzoni
D. R. McCabe
G. R. Meloy
M. W. Migliaro
J. T. Nikolas
R. E. Penn
C. R. Pope
R. Ramakumar
R. J. Reiman
D. E. Roberts
E. P. Rothong
A. J. Spurgin
G. I. Stillman
J. E. Stoner, Jr
J. B. Sullivan
R. Zweigler


--`,,`-`-`,,`,,`,`,,`---
Copyright The Institute of Electrical and Electronics Engineers, Inc.
Provided by IHS under license with IEEE
No reproduction or networking permitted without license from IHS
Not for Resale

When the IEEE Standards Board approved this standard on September 10, 1987, it had the following membership:

**Donald C. Fleckenstein**, *Chair*
**Marco W. Migliaro**, *Vice Chair*
**Andrew G. Salem**, *Secretary*

James H. Beall
Dennis Bodson
Marshall L. Cain
James M. Daly
Stephen R. Dillon
Eugene P. Fogarty
Jay Forster
Kenneth D. Hendrix
Irvin N. Howell
Leslie R. Kerr
Jack Kinn
Irving Kolodny
Joseph L. Koepfinger*
Edward Lohse
John May
Lawrence V. McCall
L. Bruce McClung
Donald T. Michael*
L. John Rankine
John P. Riganati
Gary S. Robinson
Frank L. Rose
Robert E. Rountree
Sava I. Sherr*
William R. Tackaberry
William B. Wilkens
Helen M. Wood

* Member emeritus



Copyright The Institute of Electrical and Electronics Engineers, Inc.
Provided by IHS under license with IEEE
No reproduction or networking permitted without license from IHS
Not for Resale

CLAUSE PAGE

1. Introduction and Scope ..... 1

2. References ..... 1

3. Couplings ..... 2

3.1 Sizes ..... 2
3.2 Flange Dimensions ..... 2
3.3 Bolt Holes ..... 7
3.4 Bolts and Nuts ..... 7
3.5 Jack Bolts ..... 7
3.6 Nut Guards ..... 7

4. Shaft Runout Tolerances—Factory Check ..... 12

4.1 Combined Turbine and Generator Shafts ..... 12
4.2 Combined Generator and Intermediate Shafts ..... 12
4.3 Combined Turbine and Intermediate Shafts ..... 12
4.4 Individual Generator Shaft ..... 12
4.5 Individual Turbine and Intermediate Shaft ..... 12
4.6 Records ..... 12



Copyright The Institute of Electrical and Electronics Engineers, Inc.
Provided by IHS under license with IEEE
No reproduction or networking permitted without license from IHS
Not for Resale

# IEEE Standard for Hydraulic Turbine and Generator Integrally Forged Shaft Couplings and Shaft Runout Tolerances

## 1. Introduction and Scope

This standard applies to the dimensions of integrally forged shaft couplings and to the shaft runout tolerances. Shafts and couplings included in this standard are used for both horizontal and vertical connections between generators and turbines in hydroelectric installations.

This standard does not include data on fabricated shafts, shaft stresses, and bolt tensioning. Industry experience suggests that the torque capacity of shafts having diameters greater than 72 inches is usually better provided by fabricated rather than forged shafts.

## 2. References

The following publications shall be used in conjunction with this standard:

[1] ANSI B18.2.1-1981, American National Standard Square and Hex Bolts and Screws, Inch Series.[1]

[2] ANSI B18.2.2-1972, American National Standard Square and Hex Nuts.

[3] ANSI C50.10-1977, American National Standard Requirements for Synchronous Machines.

[4] ANSI C50.12-1981, American National Standard Requirements for Salient Pole Synchronous Generators and Generator/Motors for Hydraulic Turbine Applications.

[1]ANSI publications can be obtained from the Sales Department. American National Standards Institute, 1430 Broadway, New York, NY 10018.

Copyright © 2001 IEEE All Rights Reserved


Copyright The Institute of Electrical and Electronics Engineers, Inc.
Provided by IHS under license with IEEE
No reproduction or networking permitted without license from IHS
Not for Resale

# 3. Couplings

## 3.1 Sizes

The shaft diameters included in this standard range from 3 1/2 to 72 inches. Most shafts having integrally forged couplings are of special design rather than a stock product, and the greatest possible selection of sizes is required. For this reason, instead of following a series of preferred numbers, these standard shaft diameters are increased by 1/2 inch intervals, up to 9 inches; by 1 inch intervals, from 9 to 40 inches; and by 2 inch intervals, from 40 to 72 inches. Large forgings are difficult to procure and shaft diameters larger than 72 inches are usually fabricated. Also, in these sizes, shaft stiffness and torque requirements are achieved at lower cost with fabricated rather than forged shafts.

## 3.2 Flange Dimensions

In determining the proportions of the couplings included in this standard, the diameter of the flange, in each case, has been kept as small as possible without reducing the strength of the coupling below that of the shaft in either torsion or bending.

Two values of flange thickness are provided: one for shafts that may be subject to bending at the coupling; and another for shafts not subject to bending at the coupling. However in the latter case, if the hydraulic thrust is unusually great, some value of flange thickness between C and D should be used and coupling bolts of higher tensile strength steel may be found necessary.

The flange dimensions, Table 1, are based upon the following approximate proportions:

Flange Thickness (C) = 0.25 × Shaft Diameter (A)

Flange Thickness (D) = 0.20 × Shaft Diameter (A)

Rabbet Diameter (E) = 0.60 × Shaft Diameter (A)

Relief Diameter (I) = Shaft Diameter (A) minus one inch

For matching shafts of different diameters, either the dimensions of the larger coupling shall be used for both halves, or the larger shaft shall be necked-down near the coupling to the diameter of the smaller shaft, and the dimensions of the smaller coupling shall be adopted for both.

For all vertical and horizontal shaft installations, the turbine shaft shall be provided with the male half coupling.


Copyright © 2001 IEEE All Rights Reserved

--`,,`-`-`,,`,,`,`,,`---

Copyright The Institute of Electrical and Electronics Engineers, Inc.
Provided by IHS under license with IEEE
No reproduction or networking permitted without license from IHS Not for Resale

Copyright © 2001 IEEE All Rights Reserved

Copyright The Institute of Electrical and Electronics Engineers, Inc.
Provided by IHS under license with IEEE
No reproduction or networking permitted without license from IHS

Not for Resale





## Table 1—Coupling Dimensions (Inches)

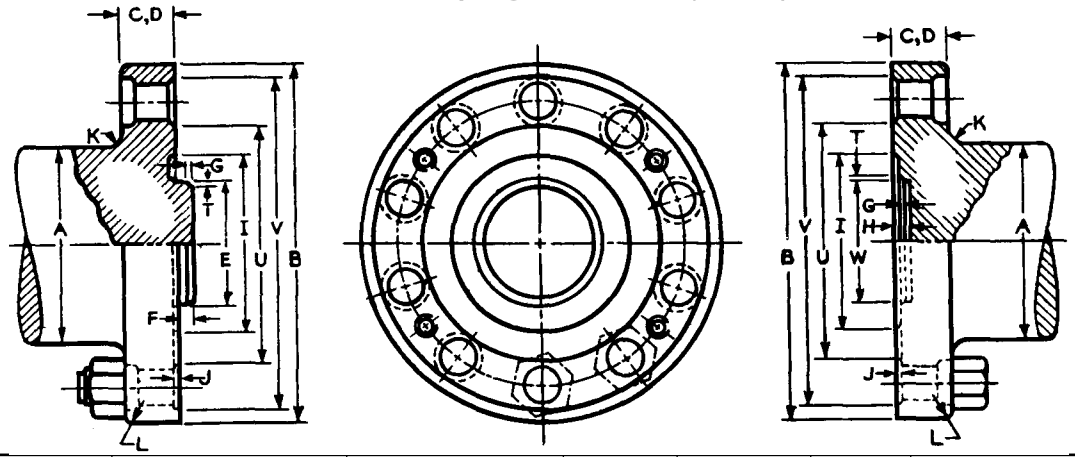


| Diameter of Shaft | Diameter of Flange | Flange Thickness | | Diameter of Rabbet (Turn) | | Diameter of Recess (Bore) | | Height of Rabbet Above Face of Flange | Rabbet and Recess Chamfer | | Depth of Recess Below Face of Flange | Relief on Faces of Flanges | | | | Radius of Fillet | Radius of Corner |
|---|---|---|---|---|---|---|---|---|---|---|---|---|---|---|---|---|---|
| | | Shaft Subject to Bending | Shaft not Subject to Bending | | Tolerance +.0000 and – | | Tolerance –.0000 and – | | | | | DIAMETER See note (1) | | | DEPTH | | |
| A | B | C | D | E | | W | | F | G | T | H | I | U | V | J | K | L |
| 3.5 | 7.5 | .88 | .88 | 2.1250 | .0005 | 2.1250 | .0005 | .31 | .06 | .03 | .38 | 2.5 | 4.62 | 6.62 | .03 | .19 | .06 |
| 4 | 8.12 | 1 | 1 | 2.3750 | .0005 | 2.3750 | .0005 | .31 | .06 | .03 | .38 | 3 | 5.25 | 7.25 | .03 | .19 | .06 |
| 4.5 | 9 | 1.12 | 1.12 | 2.7500 | .0005 | 2.7500 | .0005 | .31 | .06 | .03 | .38 | 3.5 | 5.75 | 8 | .03 | .19 | .06 |
| 5 | 10.25 | 1.25 | 1.25 | 3.0000 | .0005 | 3.0000 | .0005 | .31 | .06 | .03 | .38 | 4 | 6.38 | 9.12 | .03 | .19 | .06 |
| 5.5 | 10.88 | 1.38 | 1.38 | 3.2500 | .0005 | 3.2500 | .0005 | .31 | .06 | .03 | .38 | 4.5 | 7 | 9.75 | .03 | .25 | .06 |
| 6 | 11.5 | 1.5 | 1.5 | 3.6250 | .0005 | 3.5250 | .0005 | .31 | .06 | .03 | .38 | 5 | 7.62 | 10.38 | .03 | .25 | .06 |
| 6.5 | 12.75 | 1.62 | 1.62 | 3.8750 | .0005 | 3.6750 | .0005 | .31 | .06 | .03 | .38 | 5.5 | 8.12 | 11.38 | .03 | .25 | .06 |
| 7 | 13.5 | 1.75 | 1.75 | 4.2500 | .0005 | 4.2500 | .0005 | .31 | .06 | .03 | .38 | 6 | 8.88 | 12.12 | .03 | .38 | .09 |
| 7.5 | 14 | 1.89 | 1.75 | 4.5000 | .0005 | 4.5000 | .0005 | .31 | .06 | .03 | .38 | 6.5 | 9.35 | 12.62 | .03 | .38 | .09 |
| 8 | 15 | 2 | 1.88 | 4.7500 | .0005 | 4.7500 | .0005 | .31 | .06 | .03 | .38 | 7 | 10.12 | 13.88 | .03 | .5 | .09 |

Copyright The Institute of Electrical and Electronics Engineers, Inc.
Provided by IHS under license with IEEE
No reproduction or networking permitted without license from IHS
Not for Resale

| Diameter of Shaft | Diameter of Flange | Flange Thickness | | Diameter of Rabbet (Turn) | | Diameter of Recess (Bore) | | Height of Rabbet Above Face of Flange | Rabbet and Recess Chamfer | | Depth of Recess Below Face of Flange | Relief on Faces of Flanges | | | | Radius of Fillet | Radius of Corner |
|---|---|---|---|---|---|---|---|---|---|---|---|---|---|---|---|---|---|
| | | | | | | | | | | | | DIAMETER | | | DEPTH | | |
| | | | | | | | | | | | | See note (1) | | | | | |
| A | B | C | D | E | Tolerance + .0000 and – | W | Tolerance – .0000 and – | F | G | T | H | I | U | V | J | K | L |
| 8.5 | 15.5 | 2.12 | 1.88 | 5.1250 | .0005 | 5.1250 | .0005 | .31 | .06 | .03 | .38 | 7.5 | 10.62 | 14.38 | .03 | .5 | .09 |
| 9 | 16.25 | 2.25 | 2 | 5.3750 | .0005 | 5.3750 | .0005 | .31 | .06 | .03 | .38 | 8 | 11.38 | 15.12 | .03 | .62 | .09 |
| 10 | 18 | 2.5 | 2.25 | 6.0000 | .0005 | 6.0000 | .0005 | .31 | .06 | .03 | .38 | 9 | 12.35 | 16.62 | .03 | .62 | .09 |
| 11 | 19.75 | 2.75 | 2.25 | 6.5000 | .0005 | 6.500 | .0010 | .38 | .06 | .03 | .44 | 10 | 14.12 | 18.38 | .03 | 1 | .12 |
| 12 | 22 | 3 | 2.5 | 7.2500 | .0005 | 7.250 | .0010 | .38 | .06 | .03 | .44 | 11 | 15.62 | 20.38 | .03 | 1 | .12 |
| 13 | 23.5 | 3.25 | 2.75 | 7.7500 | .0005 | 7.750 | .0010 | .38 | .06 | .03 | .44 | 12 | 17.12 | 21.88 | .03 | 1.25 | .12 |
| 14 | 25 | 3.5 | 3 | 8.5000 | .0005 | 8.500 | .0010 | .38 | .06 | .03 | .44 | 13 | 17.88 | 23.12 | .03 | 1.25 | .12 |
| 15 | 27 | 3.75 | 3.25 | 9.0000 | .0005 | 9.000 | .0010 | .38 | .06 | .03 | .44 | 14 | 19.88 | 25.12 | 0.3 | 1.5 | .12 |
| 16 | 29 | 4 | 3.25 | 9.5000 | .0005 | 9.500 | .0010 | .38 | .06 | .03 | .44 | 15 | 21.12 | 26.88 | .03 | 1.5 | .19 |
| 17 | 30 | 4.25 | 3.5 | 10.2500 | .0005 | 10.250 | .0010 | .38 | .06 | .03 | .44 | 16 | 22.12 | 27.88 | .03 | 1.5 | .19 |
| 18 | 32.5 | 4.5 | 3.75 | 10.7500 | .0005 | 10.750 | .0010 | .38 | .06 | .03 | .44 | 17 | 23.88 | 30.12 | .03 | 1.75 | .19 |
| 19 | 34 | 4.75 | 4 | 11.5000 | .0005 | 11.500 | .0010 | .38 | .06 | .03 | .44 | 18 | 25.38 | 31.62 | .03 | 1.75 | .19 |
| 20 | 35.25 | 5 | 4 | 12.0000 | .0005 | 12.000 | .0010 | .38 | .06 | .03 | .44 | 19 | 26.62 | 32.88 | .03 | 1.75 | .25 |
| 21 | 37.25 | 5.25 | 4.25 | 12.500 | .0010 | 12.500 | .0010 | .5 | .06 | .03 | .56 | 20 | 27.88 | 34.62 | .03 | 2 | .25 |
| 22 | 39 | 5.5 | 4.5 | 13.250 | .0010 | 13.250 | .0010 | .5 | .06 | .03 | .56 | 21 | 28.88 | 36.12 | .03 | 2 | .25 |
| 23 | 40 | 5.75 | 4.75 | 13.750 | .0010 | 13.750 | .0010 | .5 | .06 | .03 | .56 | 22 | 29.88 | 37.12 | .03 | 2 | .25 |
| 24 | 42 | 6 | 4.75 | 14.500 | .0010 | 14.500 | .0010 | .5 | .06 | .03 | .56 | 23 | 31.12 | 38.88 | .03 | 2 | .25 |
| 25 | 43.5 | 6.25 | 5 | 15.000 | .0010 | 15.000 | .0010 | .5 | .06 | .03 | .56 | 24 | 32.62 | 40.38 | .03 | 2.5 | .25 |
| 26 | 45.5 | 6.5 | 5.25 | 15.500 | .001 | 15.500 | .001 | .5 | .06 | .03 | .56 | 25 | 33.88 | 42.12 | .03 | 2.5 | .25 |
| 27 | 47 | 6.75 | 5.5 | 16.250 | .001 | 16.250 | .001 | .5 | .06 | .03 | .56 | 26 | 35.38 | 43.62 | .03 | 2.5 | .25 |
| 28 | 48.5 | 7 | 5.75 | 16.750 | .001 | 16.750 | .001 | .5 | .06 | .03 | .56 | 27 | 36.88 | 45.12 | .03 | 3 | .25 |



Copyright © 2001 IEEE All Rights Reserved

| Diameter of Shaft | Diameter of Flange | Flange Thickness | | Diameter of Rabbet (Turn) | | Diameter of Recess (Bore) | | Height of Rabbet Above Face of Flange | Rabbet and Recess Chamfer | | Depth of Recess Below Face of Flange | Relief on Faces of Flanges | | | | Radius of Fillet | Radius of Corner |
|---|---|---|---|---|---|---|---|---|---|---|---|---|---|---|---|---|---|
| | | | | | | | | | | | | DIAMETER | | | DEPTH | | |
| | | | | | | | | | | | | See note (1) | | | | | |
| A | B | C | D | E | Tolerance + .0000 and – | W | Tolerance – .0000 and – | F | G | T | H | I | U | V | J | K | L |
| 29 | 50.5 | 7.25 | 5.75 | 17.500 | .001 | 17.500 | .001 | .5 | .06 | .03 | .56 | 28 | 38.12 | 46.88 | .03 | 3 | .25 |
| 30 | 51.75 | 7.5 | 6 | 18.000 | .001 | 18.000 | .001 | .5 | .06 | .03 | .56 | 29 | 39.12 | 47.88 | .03 | 3 | .38 |
| 31 | 53.5 | 7.75 | 6.25 | 18.500 | .001 | 18.500 | .001 | .62 | .12 | .06 | .69 | 30 | 40.12 | 49.38 | .03 | 3 | .38 |
| 32 | 55 | 8 | 6.5 | 19.250 | .001 | 19.250 | .001 | .62 | .12 | .06 | .69 | 31 | 41.62 | 50.88 | .03 | 3 | .38 |
| 33 | 56.5 | 8.25 | 6.75 | 19.750 | .001 | 19.750 | .001 | .62 | .12 | .06 | .69 | 32 | 43.12 | 52.38 | .03 | 3.5 | .38 |
| 34 | 58.25 | 8.5 | 7 | 20.500 | .001 | 20.500 | .001 | .62 | .12 | .06 | .69 | 33 | 44.88 | 54.12 | .03 | 3.5 | .38 |
| 35 | 60 | 8.75 | 7 | 21.000 | .001 | 21.000 | .001 | .62 | .12 | .06 | .69 | 34 | 45.88 | 55.62 | .03 | 3.5 | .38 |
| 36 | 61.75 | 9 | 7.25 | 21.500 | .001 | 21.500 | .001 | .62 | .12 | .06 | .69 | 35 | 47.62 | 57.38 | .03 | 3.5 | .38 |
| 37 | 63.5 | 9.25 | 7.5 | 22.250 | .001 | 22.250 | .001 | .62 | .12 | .06 | .69 | 36 | 48.62 | 58.88 | .03 | 3.5 | .38 |
| 38 | 64.75 | 9.5 | 7.75 | 23.000 | .001 | 23.000 | .001 | .62 | .12 | .06 | .69 | 37 | 49.88 | 60.12 | .03 | 3.5 | .38 |
| 39 | 66.5 | 9.75 | 7.75 | 23.500 | .001 | 23.500 | .001 | .62 | .12 | .06 | .69 | 38 | 50.88 | 61.62 | .03 | 3.5 | .38 |
| 40 | 68 | 10 | 8 | 24.000 | .001 | 24.000 | .001 | .62 | .12 | .06 | .69 | 39 | 52.38 | 63.12 | .03 | 3.5 | .38 |
| 42 | 70.25 | 10.50 | 8.25 | 25.000 | .001 | 25.000 | .001 | .62 | .12 | .06 | .69 | 41 | 53.62 | 64.88 | .03 | 4 | .38 |
| 44 | 73.12 | 11.00 | 9.00 | 26.000 | .001 | 26.000 | .001 | .62 | .12 | .06 | .69 | 43 | 55.75 | 67.50 | .03 | 4 | .38 |
| 46 | 76.00 | 11.50 | 9.25 | 27.000 | .001 | 27.000 | .001 | .62 | .12 | .06 | .69 | 45 | 57.88 | 70.12 | .03 | 4 | .38 |
| 48 | 78.88 | 12.00 | 9.50 | 28.000 | .001 | 28.000 | .001 | .62 | .12 | .06 | .69 | 47 | 60.00 | 72.75 | .03 | 4 | .38 |
| 50 | 81.75 | 12.50 | 10.00 | 29.000 | .001 | 29.000 | .001 | .62 | .12 | .06 | .69 | 49 | 62.12 | 75.38 | .03 | 4 | .38 |
| 52 | 84.62 | 13.00 | 10.50 | 30.000 | .001 | 30.000 | .001 | .62 | .12 | .06 | .69 | 51 | 64.25 | 78.00 | .03 | 4 | .38 |
| 54 | 87.50 | 13.50 | 10.75 | 31.000 | .001 | 31.000 | .001 | .62 | .12 | .06 | .69 | 53 | 66.38 | 80.62 | .03 | 4 | .38 |
| 56 | 88.62 | 14.00 | 11.25 | 32.000 | .001 | 32.000 | .001 | .62 | .12 | .06 | .69 | 55 | 68.25 | 82.00 | .03 | 4 | .38 |
| 58 | 92.50 | 14.50 | 11.50 | 33.000 | .001 | 33.000 | .001 | .62 | .12 | .06 | .69 | 57 | 71.38 | 85.62 | .03 | 4.5 | .38 |

Copyright © 2001 IEEE All Rights Reserved



Copyright The Institute of Electrical and Electronics Engineers, Inc.
Provided by IHS under license with IEEE
No reproduction or networking permitted without license from IHS
Not for Resale

Copyright The Institute of Electrical and Electronics Engineers, Inc.
Provided by IHS under license with IEEE
No reproduction or networking permitted without license from IHS







| Diameter of Shaft | Diameter of Flange | Flange Thickness | | Diameter of Rabbet (Turn) | | Diameter of Recess (Bore) | | Height of Rabbet Above Face of Flange | Rabbet and Recess Chamfer | | Depth of Recess Below Face of Flange | Relief on Faces of Flanges | | | | Radius of Fillet | Radius of Corner |
|---|---|---|---|---|---|---|---|---|---|---|---|---|---|---|---|---|---|
| | | | | | | | | | | | | DIAMETER | | | DEPTH | | |
| | | | | | | | | | | | | See note (1) | | | | | |
| A | B | C | D | E | Tolerance + .0000 and – | W | Tolerance – .0000 and – | F | G | T | H | I | U | V | J | K | L |
| 60 | 95.38 | 15.00 | 12.00 | 34.000 | .001 | 34.000 | .001 | .62 | .12 | .06 | .69 | 59 | 73.50 | 88.25 | .03 | 4.5 | .38 |
| 62 | 99.25 | 15.50 | 12.50 | 36.000 | .001 | 36.000 | .001 | .75 | .19 | .09 | .81 | 61 | 76.62 | 91.88 | .03 | 5 | .50 |
| 64 | 102.12 | 16.00 | 12.75 | 38.000 | .001 | 38.000 | .001 | .75 | .19 | .09 | .81 | 63 | 78.75 | 94.00 | .03 | 5 | .50 |
| 66 | 106.00 | 16.50 | 13.25 | 40.000 | .001 | 40.000 | .001 | .75 | .19 | .09 | .81 | 65 | 81.88 | 98.12 | .03 | 5.5 | .50 |
| 68 | 108.88 | 17.00 | 13.50 | 41.000 | .001 | 41.000 | .001 | .75 | .19 | .09 | .81 | 67 | 84.00 | 100.75 | .03 | 5.5 | .50 |
| 70 | 111.00 | 17.50 | 14.00 | 42.000 | .001 | 42.000 | .001 | .75 | .19 | .09 | .81 | 69 | 86.88 | 103.12 | .03 | 6 | .50 |
| 72 | 113.88 | 18.00 | 14.50 | 43.000 | .001 | 43.000 | .001 | .75 | .19 | .09 | .81 | 71 | 89.00 | 105.75 | .03 | 6 | .50 |

NOTES:

1 — To ensure that the outer portion of the coupling face makes contact first, the flat surface of the coupling face between diameters U and I may be relieved as shown in the following table:

| Coupling Flange Diameter in Inches | Relief of Surface of Each Flange Face | |
|---|---|---|
| | Minimum | Maximum |
| 0 to 25 | 0.000 | 0.0005 |
| Over 25 to 50 | 0.000 | 0.001 |
| Over 50 | 0.000 | 0.001 |

2 — The radius L may be omitted from the flange when a nut guard is furnished.

3 — If the outside diameter of the nut guard is equal to the flange diameter B, a rabbet recess may be provided in the flange in place of the radius L to center the guard properly.

Copyright © 2001 IEEE All Rights Reserved

Not for Resale

## 3.3 Bolt Holes

Shafts 12 inches and larger in diameter shall have the bolt holes counterbored from the back of the flange to facilitate bolt placement. The depth of this counterbore shall be such that the length (in each flange) of the reamed portion S, Table 2, of the bolt hole is at least 0.8 times the nominal body diameter of the bolt.

## 3.4 Bolts and Nuts

The number and diameter of the bolts are based upon the assumption that the torque is transmitted only by shear in the bolts and that the combined stress in the bolts may safely be as much as 30% greater than the combined stress in the shaft. The diameter of the bolt body shall be determined from information given in Table 2.

NOTE — Hexagon head, round head, or stud bolts with nuts at both ends, may be used for all bolt diameters up to and including 5.25 inches at the discretion of the manufacturer. For bolts above 5.25 inches in diameter, the use of stud bolts with round nuts is recommended. The dimensions. listed in Tables 1 and 2 of this standard for shaft diameters of 42 inches and larger were based on this recommendation. For shaft diameters up to and including 9 inches, hexagon nuts were used to determine flange diameter. Heavy hexagon nuts were used for all other shaft sizes up to and including 40 inches.

The hexagon bolt heads (if used) shall correspond to the dimensions given in ANSI B18.2.1-1981 [1][2]. Bolt heads shall be of the same size as the nuts, or of the size corresponding to the body diameter of the bolts. In the latter case, one flat shall be placed parallel to the periphery of the flange to provide clearance for the nut guard.

The nuts shall correspond to the dimensions given in ANSI B18-2.2-1972 [2], and shall be of the sizes shown in Table 2 of this standard.

Bolt heads and nuts beyond the sizes listed in ANSI B18.2.1-1981[1] and ANSI B18.2.2-1972 [2] shall be dimensioned in accordance with the formulas given in Appendix II of each of those standards. When used, round nuts or bolt heads shall have a diameter equal to or greater than the across flat dimensions given in those standards.

The bolts shall be straight (not tapered) and shall be fitted individually within the clearances specified in Table 2. The bolts and bolt holes shall be identified with corresponding numbers to facilitate assembly.

The length of the bolts shall be such that they will project slightly beyond the nuts. The diameter of this projecting portion, which is provided for driving when the bolts are being assembled or removed, shall be smaller than the root diameter of the thread. The number of threads per inch shall be as given in Table 2.

## 3.5 Jack Bolts

The jack bolts shall be furnished with the female half coupling for both vertical and horizontal shafts.

The diameter and number of threads per inch shall be as indicated in Table 2. The length shall suit the thickness of the coupling.

## 3.6 Nut Guards

In order to permit the installation of nut guards of the same outside diameter as the flange (Table 1, Dimension B), a clearance Q has been provided between the edge of the flange and the nuts.

NOTE — The nut guard may also be allowed to overlap the flange.

[2]The numbers in brackets correspond to those of the references listed in Section 2.

Copyright © 2001 IEEE All Rights Reserved


Copyright The Institute of Electrical and Electronics Engineers, Inc.
Provided by IHS under license with IEEE
No reproduction or networking permitted without license from IHS Not for Resale

## Table 2 —Drilling Layout and Bolt Dimensions (Inches)

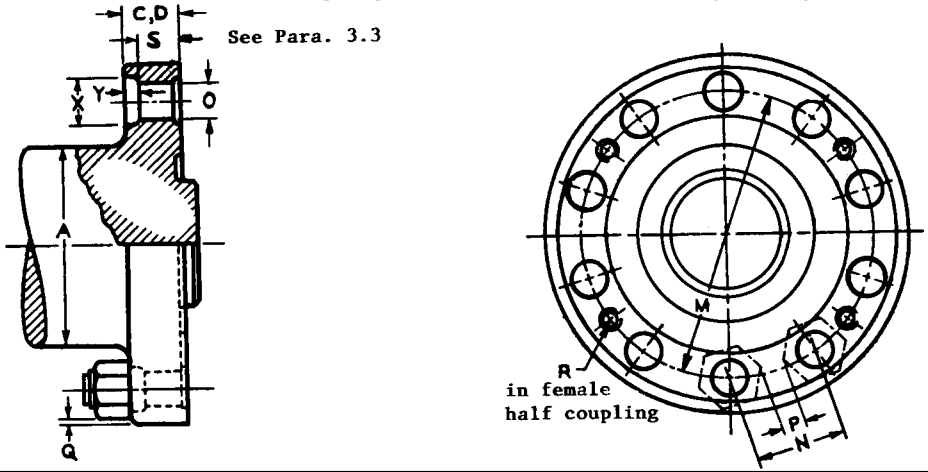


| Diameter of Shaft | Diameter of Coupling Bolt Circle | Center Distance of Coupling Bolts | Coupling Bolts | | | | Nuts | | Distance Between Nuts, Min | Clearance for Nut Guard | Bolt Hole Counterbore | | | Jack Bolts | | |
|---|---|---|---|---|---|---|---|---|---|---|---|---|---|---|---|---|
| | | | Number of Bolts | Bolt Hole Diameter, Nominal | Bolt Body Diameter Clearance In Fit (See note) | | | | | | Diameter | Depth Y | | R | | |
| | | | | | Min | Max | Size | Thds per Inch | | | | Flange | Flange | Min Number | Size | Thds per Inch |
| A | M | N | | O | | | | | P | Q | X | C | D | | | |
| 3.5 | 5.625 | 2.812 | 6 | .875 | .0005 | .001 | .875 | 9 | 1.30 | .18 | — | — | — | 3 | .75 | 10 |
| 4 | 6.250 | 3.125 | 6 | .875 | .0(05 | .001 | .875 | 9 | 1.61 | .18 | — | — | — | 3 | .75 | 10 |
| 4.5 | 6.875 | 3.438 | 6 | 1.000 | .0005 | .001 | 1 | 8 | 1.71 | .20 | — | — | — | 3 | .75 | 10 |
| 5 | 7.750 | 3.875 | 6 | 1.250 | .0005 | .001 | 1.25 | 8 | 1.71 | .17 | — | — | — | 3 | .75 | 10 |
| 5.5 | 8.375 | 4.188 | 6 | 1.250 | .0005 | .001 | 1.25 | 8 | 2.02 | .17 | — | — | — | 3 | .75 | 10 |
| 6 | 9.000 | 3.444 | 8 | 1.250 | .0005 | .001 | 1.25 | 8 | 1.28 | .17 | — | — | — | 4 | .75 | 10 |
| 6.5 | 9.750 | 4.875 | 6 | 1.500 | .0005 | .001 | 1.5 | 8 | 2.28 | .20 | — | — | — | 3 | .75 | 10 |
| 7 | 10.500 | 4.018 | 8 | 1.500 | .0005 | .001 | 1.5 | 8 | 1.42 | .20 | — | — | — | 4 | .75 | 10 |
| 7.5 | 11.000 | 4.210 | 8 | 1.500 | .0005 | .001 | 1.5 | 8 | 1.61 | .20 | — | — | — | 4 | .75 | 10 |

Copyright The Institute of Electrical and Electronics Engineers, Inc.
Provided by IHS under license with IEEE
No reproduction or networking permitted without license from IHS

Not for Resale

Copyright © 2001 IEEE All Rights Reserved

| Diameter of Shaft | Diameter of Coupling Bolt Circle | Center Distance of Coupling Bolts | Coupling Bolts | | | | Nuts | | Distance Between Nuts, Min | Clearance for Nut Guard | Bolt Hole Counterbore | | | Jack Bolts | | |
|---|---|---|---|---|---|---|---|---|---|---|---|---|---|---|---|---|
| | | | Number of Bolts | Bolt Hole Diameter, Nominal | Bolt Body Diameter Clearance In Fit (See note) | | | | | | Diameter | Depth Y | | R | | |
| | | | | | Min | Max | Size | Thds per Inch | | | | Flange | Flange | Min Number | Size | Thds per Inch |
| A | M | N | | O | | | | | P | Q | X | C | D | | | |
| 8 | 12.000 | 4.592 | 8 | 1.750 | .0005 | .002 | 1.5 | 8 | 1.99 | .20 | — | — | — | 4 | .75 | 10 |
| 8.5 | 12.500 | 4.784 | 8 | 1.750 | .0005 | .002 | 1.5 | 8 | 2.18 | .20 | — | — | — | 4 | .75 | 10 |
| 9 | 13.250 | 4.090 | 10 | 1.750 | .0005 | .002 | 1.5 | 8 | 1.50 | .20 | — | — | — | 4 | .75 | 10 |
| 10 | 14.500 | 4.481 | 10 | 2.000 | .0005 | .002 | 1.75 | 8 | 1.45 | .23 | — | — | — | 4 | .75 | 10 |
| 11 | 16.250 | 5.021 | 10 | 2.000 | .0005 | .002 | 1.75 | 8 | 1.84 | .16 | — | — | — | 4 | .75 | 10 |
| 12 | 18.000 | 5.562 | 10 | 2.250 | .0005 | .002 | 2 | 8 | 1.95 | .19 | 2.38 | 1 | .5 | 4 | .75 | 10 |
| 13 | 19.500 | 5.047 | 12 | 2.250 | .0005 | .002 | 2 | 8 | 1.43 | .19 | 2.38 | 1.25 | .75 | 3 | 1 | 8 |
| 14 | 20.500 | 5.306 | 12 | 2.500 | .0005 | .002 | 2.25 | 8 | 1.26 | .22 | 2.62 | 1.5 | 1 | 3 | 1 | 8 |
| 15 | 22.500 | 5.823 | 12 | 2.500 | .0005 | .002 | 2.25 | 8 | 1.78 | .22 | 2.62 | 1.75 | 1.25 | 3 | 1 | 8 |
| 16 | 24.000 | 6.211 | 12 | 2.750 | .001 | .003 | 2.5 | 8 | 1.73 | .26 | 2.88 | 1.75 | 1 | 3 | 1 | 8 |
| 17 | 25.000 | 6.470 | 12 | 2.750 | .001 | .003 | 2.5 | 8 | 1.99 | .26 | 2.88 | 2 | 1.25 | 3 | 1 | 8 |
| 18 | 27.000 | 6.988 | 12 | 3.000 | .001 | .003 | 2.75 | 8 | 2.08 | .29 | 3.12 | 2 | 1.25 | 3 | 1 | 8 |
| 19 | 28.500 | 6.341 | 14 | 3.000 | .001 | .003 | 2.75 | 8 | 1.43 | .29 | 3.12 | 2.25 | 1.5 | 4 | 1 | 8 |
| 20 | 29.750 | 6.619 | 14 | 3.000 | .001 | .003 | 2.75 | 8 | 1.71 | .29 | 3.12 | 2.5 | 1.5 | 4 | 1 | 8 |
| 21 | 31.250 | 6.953 | 14 | 3.250 | .001 | .003 | 3 | 8 | 1.61 | .33 | 3.38 | 2.5 | 1.5 | 4 | 1 | 8 |
| 22 | 32.500 | 7.231 | 14 | 3.500 | .001 | .003 | 3.25 | 8 | 1.45 | .36 | 3.62 | 2.5 | 1.5 | 4 | 1 | 8 |
| 23 | 33.500 | 7.453 | 14 | 3.500 | .001 | .003 | 3.25 | 8 | 1.67 | .36 | 3.62 | 2.75 | 1.75 | 4 | 1 | 8 |
| 24 | 35.000 | 7.788 | 14 | 3.750 | .002 | .004 | 3.5 | 8 | 1.58 | .39 | 3.88 | 3 | 1.75 | 4 | 1 | 8 |
| 25 | 36.500 | 8.121 | 14 | 3.750 | .002 | .004 | 3.5 | 8 | 1.91 | .39 | 3.88 | 3.25 | 2 | 4 | 1.25 | 8 |
| 26 | 38.000 | 8.455 | 14 | 4.000 | .002 | .004 | 3.75 | 8 | 1.81 | .43 | 4.12 | 3.25 | 2 | 4 | 1.25 | 8 |

Copyright © 2001 IEEE All Rights Reserved



Copyright The Institute of Electrical and Electronics Engineers, Inc.
Provided by IHS under license with IEEE
No reproduction or networking permitted without license from IHS
Not for Resale

| Diameter of Shaft | Diameter of Coupling Bolt Circle | Center Distance of Coupling Bolts | Coupling Bolts | | | | Nuts | | Distance Between Nuts, Min | Clearance for Nut Guard | Bolt Hole Counterbore | | | Jack Bolts | | |
|---|---|---|---|---|---|---|---|---|---|---|---|---|---|---|---|---|
| | | | Number of Bolts | Bolt Hole Diameter, Nominal | Bolt Body Diameter Clearance In Fit (See note) | | | | | | Diameter | Depth Y | | R | | |
| | | | | | Min | Max | Size | Thds per Inch | | | | Flange | Flange | Min Number | Size | Thds per Inch |
| A | M | N | | O | | | | | P | Q | X | C | D | | | |
| 27 | 39.500 | 7.706 | 16 | 4.000 | .002 | .004 | 3.75 | 8 | 1.06 | .43 | 4.12 | 3.5 | 2.25 | 4 | 1.25 | 8 |
| 28 | 41.000 | 7.999 | 16 | 4.000 | .002 | .004 | 3.75 | 8 | 1.35 | .43 | 4.12 | 3.75 | 2.5 | 4 | 1.25 | 8 |
| 29 | 42.500 | 8.292 | 16 | 4.250 | .002 | .004 | 4 | 8 | 1.21 | .46 | 4.38 | 3.75 | 2.25 | 4 | 1.25 | 8 |
| 30 | 43.500 | 8.487 | 16 | 4.250 | .002 | .004 | 4 | 8 | 1.41 | .58 | 4.38 | 4 | 2.5 | 4 | 1.25 | 8 |
| 31 | 44.750 | 8.731 | 16 | 4.500 | .002 | .004 | 4.25 | 8 | 1.22 | .62 | 4.62 | 4 | 2.5 | 4 | 1.25 | 8 |
| 32 | 46.205 | 9.023 | 16 | 4.500 | .002 | .004 | 4.25 | 8 | 1.51 | .62 | 4.62 | 4.25 | 2.75 | 4 | 1.25 | 8 |
| 33 | 47.750 | 8.292 | 18 | 4.500 | .002 | .004 | 4.25 | 8 | .78 | .62 | 4.62 | 4.5 | 3 | 3 | 1.25 | 8 |
| 34 | 49.500 | 8.596 | 18 | 4.500 | .002 | .004 | 4.25 | 8 | 1.09 | .62 | 4.62 | 4.75 | 3.25 | 3 | 1.25 | 8 |
| 35 | 50.750 | 8.812 | 18 | 4.750 | .003 | .005 | 4.5 | 8 | .87 | .65 | 4.88 | 4.75 | 3 | 3 | 1.25 | 8 |
| 36 | 52.50 | 9.117 | 18 | 4.750 | .003 | .005 | 4.5 | 8 | 1.17 | .65 | 4.88 | 5 | 3.25 | 3 | 1.25 | 8 |
| 37 | 53.750 | 9.334 | 18 | 5.000 | .003 | .005 | 4.75 | 8 | .96 | .68 | 5.12 | 5.25 | 3.5 | 3 | 1.25 | 8 |
| 38 | 55.000 | 9.551 | 18 | 5.000 | .003 | .005 | 4.75 | 8 | 1.18 | .68 | 5.12 | 5.5 | 3.75 | 3 | 1.25 | 8 |
| 39 | 56.250 | 9.768 | 18 | 5.250 | .003 | .005 | 5 | 8 | .96 | .72 | 5.38 | 5.5 | 3.5 | 3 | 1.5 | 8 |
| 40 | 57.705 | 10.028 | 18 | 5.250 | .003 | .005 | 5 | 8 | 1.22 | .72 | 5.38 | 5.75 | 3.75 | 3 | 1.5 | 8 |
| 42 | 59.250 | 10.284 | 18 | 5.500 | .003 | .005 | 5.25 | 8 | 2.40 | 1.56 | 5.62 | 6.00 | 3.75 | 3 | 1.5 | 8 |
| 44 | 61.625 | 10.701 | 18 | 5.750 | .004 | .006 | 5.50 | 8 | 2.45 | 1.62 | 5.87 | 6.25 | 4.25 | 3 | 1.5 | 8 |
| 46 | 64.000 | 11.113 | 18 | 6.000 | .004 | .006 | 5.75 | 8 | 2.48 | 1.68 | 6.12 | 6.50 | 4.25 | 3 | 1.5 | 8 |
| 48 | 66.375 | 11.526 | 18 | 6.250 | .004 | .006 | 6.00 | 8 | 2.52 | 1.75 | 6.37 | 6.87 | 4.37 | 3 | 1.5 | 8 |
| 50 | 68.750 | 11.938 | 18 | 6.500 | .004 | .006 | 6.25 | 8 | 2.56 | 1.81 | 6.62 | 7.25 | 4.75 | 3 | 1.5 | 8 |
| 52 | 71.125 | 12.351 | 18 | 6.750 | .005 | .007 | 6.50 | 8 | 2.60 | 1.87 | 6.87 | 7.50 | 5.00 | 3 | 1.75 | 8 |



Copyright © 2001 IEEE All Rights Reserved
Copyright The Institute of Electrical and Electronics Engineers, Inc.
Provided by IHS under license with IEEE
No reproduction or networking permitted without license from IHS
Not for Resale

Copyright © 2001 IEEE All Rights Reserved



| Diameter of Shaft | Diameter of Coupling Bolt Circle | Center Distance of Coupling Bolts | Coupling Bolts | | | | Nuts | | Distance Between Nuts, Min | Clearance for Nut Guard | Bolt Hole Counterbore | | | Jack Bolts | | |
|---|---|---|---|---|---|---|---|---|---|---|---|---|---|---|---|---|
| | | | Number of Bolts | Bolt Hole Diameter, Nominal | Bolt Body Diameter Clearance In Fit (See note) | | | | | | Diameter | Depth Y | | R | | |
| | | | | | Min | Max | Size | Thds per Inch | | | | Flange | Flange | Min Number | Size | Thds per Inch |
| A | M | N | | O | | | | | P | Q | X | C | D | | | |
| 54 | 73.500 | 12.763 | 18 | 7.000 | .005 | .007 | 6.75 | 8 | 2.63 | 1.93 | 7.12 | 7.75 | 5.00 | 3 | 1.75 | 8 |
| 56 | 75.125 | 11.752 | 20 | 6.750 | .005 | .007 | 6.50 | 8 | 2.00 | 1.87 | 6.87 | 8.50 | 5.75 | 4 | 1.75 | 8 |
| 58 | 78.500 | 12.280 | 20 | 7.000 | .005 | .007 | 6.75 | 8 | 2.15 | 1.93 | 7.12 | 8.75 | 5.75 | 4 | 1.75 | 8 |
| 60 | 80.875 | 12.652 | 20 | 7.250 | .005 | .007 | 7.00 | 8 | 2.15 | 2.00 | 7.37 | 9.12 | 6.12 | 4 | 1.75 | 8 |
| 62 | 84.250 | 13.180 | 20 | 7.500 | .005 | .007 | 7.25 | 8 | 2.30 | 2.06 | 7.62 | 9.37 | 6.37 | 4 | 2.0 | 8 |
| 64 | 86.625 | 13.551 | 20 | 7.750 | .006 | .008 | 7.50 | 8 | 2.30 | 2.12 | 7.87 | 9.75 | 6.50 | 4 | 2.0 | 8 |
| 66 | 90.000 | 14.080 | 20 | 8.000 | .006 | .008 | 7.75 | 8 | 2.45 | 2.18 | 8.12 | 10.00 | 6.75 | 4 | 2.0 | 8 |
| 68 | 92.375 | 14.451 | 20 | 8.250 | .006 | .008 | 8.00 | 8 | 2.45 | 2.25 | 8.37 | 10.25 | 6.75 | 4 | 2.0 | 8 |
| 70 | 95.000 | 13.520 | 22 | 8.000 | .006 | .008 | 7.75 | 8 | 1.89 | 2.18 | 8.12 | 11.00 | 7.50 | 4 | 2.0 | 8 |
| 72 | 97.375 | 13.858 | 22 | 8.250 | .006 | .008 | 8.00 | 8 | 1.85 | 2.25 | 8.37 | 11.25 | 7.75 | 4 | 2.0 | 8 |

NOTE — For couplings of generator shafts to impulse turbine runners or runner disks, the bolt-body diameter clearances shown in the table do not apply, since a metal-to-metal fit or slight drive fit is desired.





Copyright The Institute of Electrical and Electronics Engineers, Inc.
Provided by IHS under license with IEEE
No reproduction or networking permitted without license from IHS
Not for Resale

# 4. Shaft Runout Tolerances—Factory Check

## 4.1 Combined Turbine and Generator Shafts

When the alignment of the combined turbine and generator shafts is checked at the factory, it shall be done by rotating the shafts in a lathe or on a vertical alignment table. The couplings should be match marked before disassembly. The amount of runout, determined by the reading of an indicator held stationary with respect to the lathe or table, shall not exceed the tolerances of Table 3.

## 4.2 Combined Generator and Intermediate Shafts

The tolerances on the runout when checked in the same manner as described in 4.1 shall not exceed those of Table 4.

## 4.3 Combined Turbine and Intermediate Shafts

The tolerance on the runout when checked in the same manner described in 4.1 shall not exceed those of Table 5.

## 4.4 Individual Generator Shaft

When the shafts are to be aligned at a location other than the generator's manufacturer's factory, the tolerances on the runout of the individual generator shaft when checked in the same manner as that described in 4.1 shall not exceed those of Table 6.

## 4.5 Individual Turbine and Intermediate Shaft

Experience indicates that the prescribed tolerances on the combined shafts will usually be met if the runout, when the shafts are checked individually in the same manner as that described in 4.1, does not exceed the tolerances of Table 7 for turbine shafts and Table 8 for intermediate shafts.

## 4.6 Records

A shaft alignment drawing shall be prepared showing the location of shaft check points and measurement values for the information of the field erector.


--`,,`-`-`,,`,,`,`,,`---
Copyright © 2001 IEEE All Rights Reserved

Copyright The Institute of Electrical and Electronics Engineers, Inc.
Provided by IHS under license with IEEE
No reproduction or networking permitted without license from IHS
Not for Resale

**Table 3 —Combined Turbine and Generator Shaft Tolerances (No intermediate shaft used)**

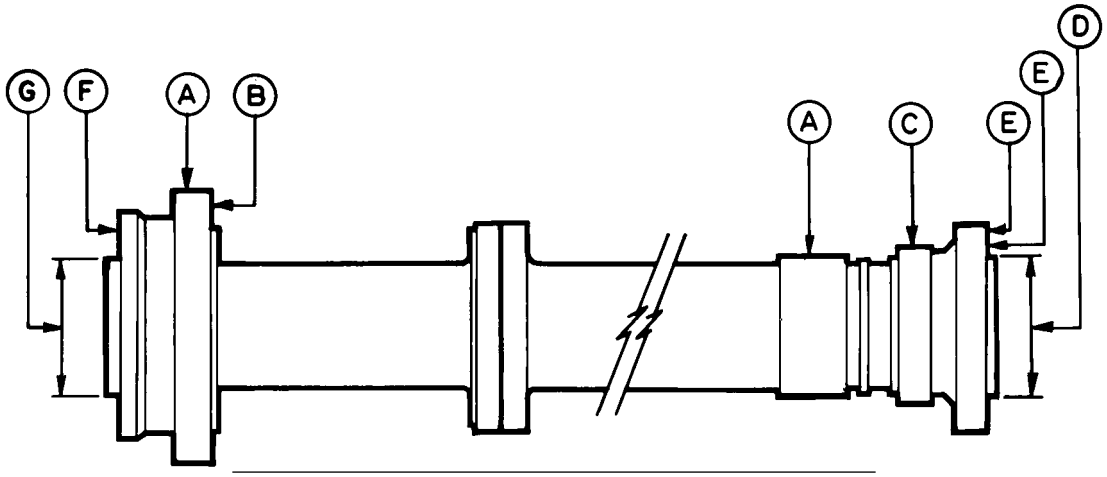


| Item | Point Indicated | Tolerances (Inches) |
|---|---|---|
| A | Cylindrical surface of all guide bearing journals | 0.003 |
| B(1) | Face of thrust block (if forged integral with shaft) before attachment of thrust bearing runner | 0.00075 |
| B(2) | Face of thrust block (if not forged integral with the shaft) calculated from runout of face of retaining ring groove or shoulder on the shaft bearing against the thrust block* | 0.0015 |
| C | Turbine water-seal surface | 0.003 |
| D | Male or female portion of coupling at runner end of turbine shaft | 0.0015 |
| E | Face of coupling (inside and outside the bolt circle) at runner end of turbine shaft | 0.0015 |
| F | Face of coupling at generator end of generator shaft | 0.0015 |
| G | Male or female portion of coupling at generator end of generator shaft | 0.0015 |

*If the thrust block is not forged integral with the shaft, it is not necessary to reassemble the block on the shaft for the shop check of the combined generator and intermediate or turbine shaft.

Copyright © 2001 IEEE All Rights Reserved


Copyright The Institute of Electrical and Electronics Engineers, Inc.
Provided by IHS under license with IEEE
No reproduction or networking permitted without license from IHS
Not for Resale

**Table 4 —Combined Generator and Intermediate Shaft Tolerances**

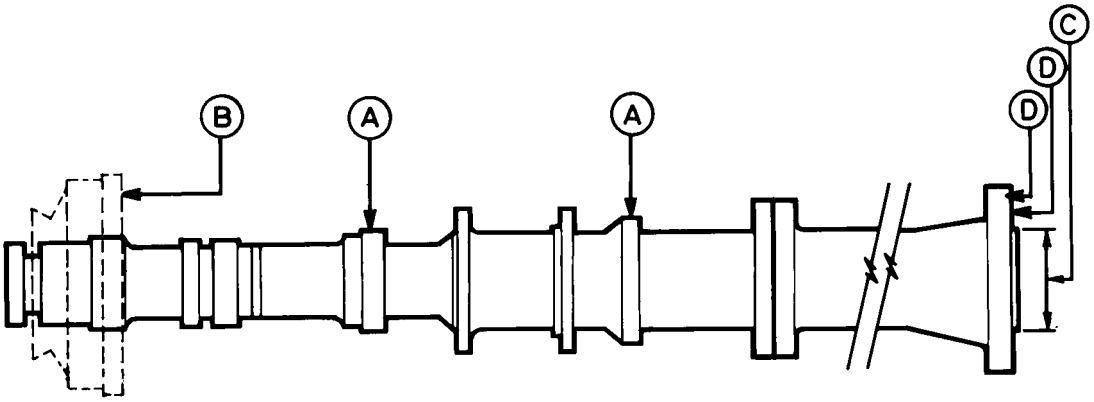


| Item | Point Indicated | Tolerances (Inches) |
|---|---|---|
| A | Cylindrical surface of all guide bearing journals | 0.003 |
| B(1) | Face of thrust block (if forged integral with shaft) before attachment of thrust bearing runner | 0.00075 |
| B(2) | Face of thrust block (if not forged integral with the shaft) calculated from runout of face of retaining ring groove or shoulder on the shaft bearing against the thrust block* | 0.0015 |
| C | Male or female portion of coupling at turbine end of intermediate shaft | 0.001 |
| D | Face of coupling (inside and outside the bolt circle) at turbine end of intermediate shaft | 0.001 |

*If the thrust block is not forged integral with the shaft, it is not necessary to reassemble the block on the shaft for the shop check of the combined generator and intermediate or turbine shaft.


Copyright © 2001 IEEE All Rights Reserved

Copyright The Institute of Electrical and Electronics Engineers, Inc.
Provided by IHS under license with IEEE
No reproduction or networking permitted without license from IHS Not for Resale

**Table 5 —Combined Turbine and Intermediate Shaft Tolerances**

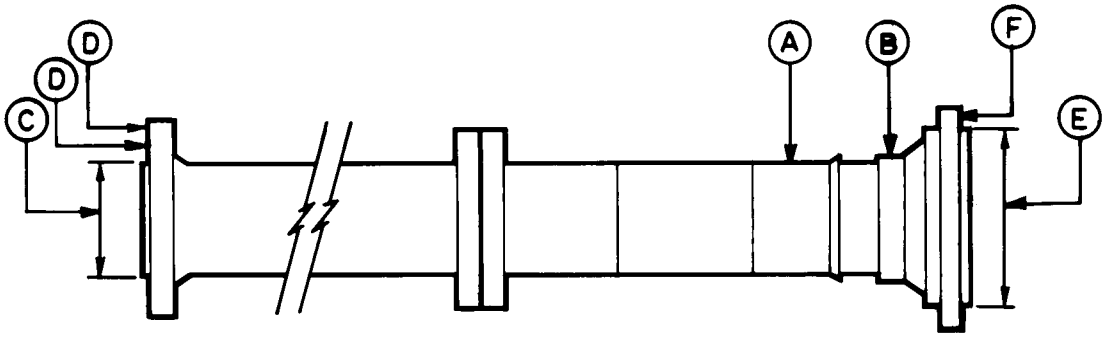


| Item | Point Indicated | Tolerances (Inches) |
|---|---|---|
| A | Cylindrical surface of all guide bearing journals | 0.003 |
| B | Turbine water-seal surface | 0.003 |
| C | Male portion of coupling at generator end of intermediate shaft | 0.001 |
| D | Face of coupling (inside and outside the bolt circle) at generator end of intermediate shaft | 0.001 |
| E | Male or female portion of coupling at runner end of turbine shaft | 0.0015 |
| F | Face of coupling at runner end of turbine shaft | 0.0015 |

Copyright © 2001 IEEE All Rights Reserved


--`,,`-`-`,,`,,`,`,,`---

Copyright The Institute of Electrical and Electronics Engineers, Inc.
Provided by IHS under license with IEEE
No reproduction or networking permitted without license from IHS
Not for Resale

**Table 6 —Generator Shaft**

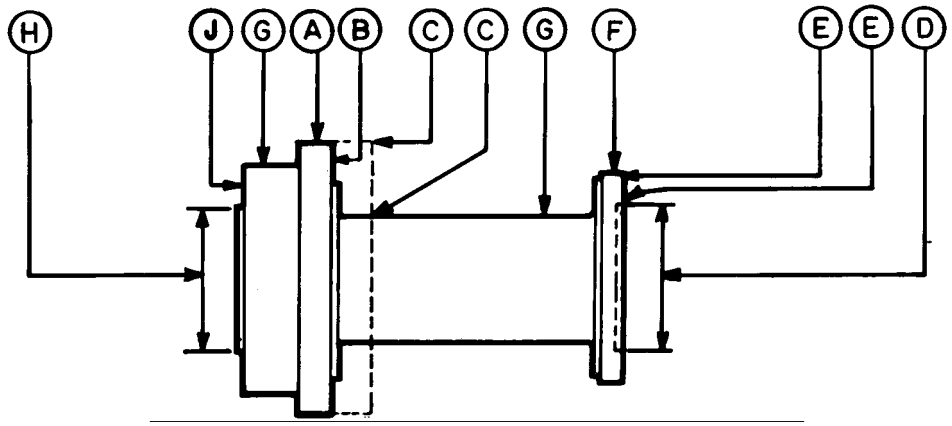


| Item | Point Indicated | Tolerances (Inches) |
|---|---|---|
| A | Cylindrical surface of all guide bearing journals | 0.002 |
| B | Face of thrust block before attachment of separate thrust bearing runner. Removable type thrust block must be in position for this reading | 0.00075 |
| C | If the thrust bearing runner is separate, the thickness variation at constant radius, measured at inner and outer diameter | 0.0005 |
| D | Female portion of coupling | 0.001 |
| E | Face of coupling (inside and outside the bolt circle)* | 0.00075 |
| F | Outside cylindrical surface of coupling flanges or other reference surfaces | 0.002 |
| G | Balance of shaft exclusive of indicated points (if machined) | 0.015 |
| H | Male portion of shaft coupling (if part of shaft system) | 0.001 |
| J | Face of coupling at generator end of generator shaft | 0.001 |

*Mark cylindrical surface of shaft flange with “H” to show high point of face of coupling. The mark shall not interfere with future shaft indications or the fit of the coupling guard.


Copyright © 2001 IEEE All Rights Reserved

Copyright The Institute of Electrical and Electronics Engineers, Inc.
Provided by IHS under license with IEEE
No reproduction or networking permitted without license from IHS
Not for Resale

**Table 7 —Turbine Shaft**

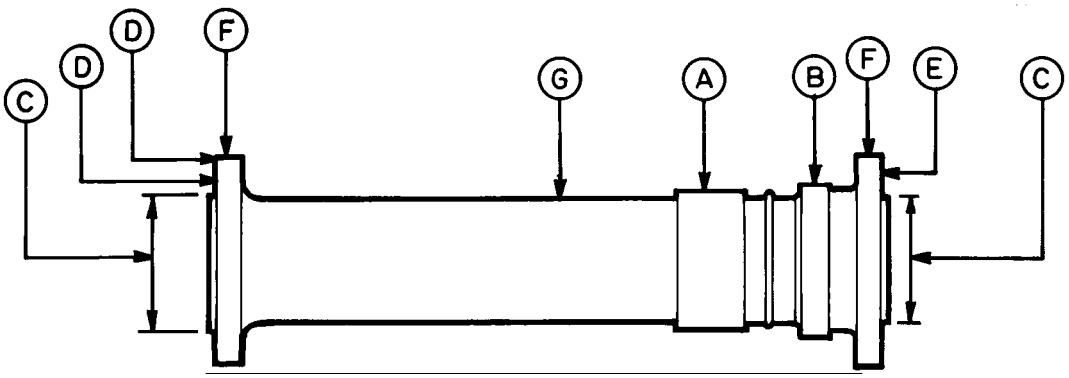


| Item | Point Indicated | Tolerances (Inches) |
|---|---|---|
| A | Cylindrical surface of all guide bearing journals | 0.002 |
| B | Water seal surfaces | 0.002 |
| C | Male or female portion of couplings | 0.001 |
| D | Face of coupling (inside and outside the bolt circle) at generator end of turbine shaft* | 0.00075 |
| E | Face of coupling at runner end of turbine shaft | 0.001 |
| F | Outside cylindrical surface of couplings/flanges or other reference surfaces | 0.002 |
| G | Balance of shaft exclusive of indicated points (if machined) | 0.015 |

*Mark cylindrical surface of shaft flange with “H” to show high point of face of coupling. The mark shall not interfere with future shaft indications or the fit of the coupling guard.

Copyright © 2001 IEEE All Rights Reserved


Copyright The Institute of Electrical and Electronics Engineers, Inc.
Provided by IHS under license with IEEE
No reproduction or networking permitted without license from IHS Not for Resale

**Table 8 —Intermediate Shaft**

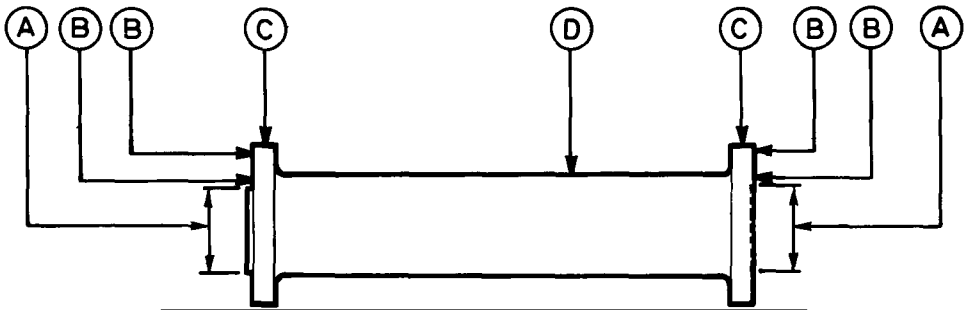


| Item | Point Indicated | Tolerances (Inches) |
|---|---|---|
| A | Male or female portion of couplings | 0.001 |
| B | Face of couplings (inside and outside the bolt circle)* | 0.00075 |
| C | Outside cylindrical surface of coupling flanges or other reference surfaces | 0.002 |
| D | Balance of shaft exclusive of indicated points (if machined) | 0.015 |

*Mark cylindrical surface of shaft flange with “H” to show high point of face of coupling. The mark shall not interfere with future shaft indications or the fit of the coupling guard.


Copyright © 2001 IEEE All Rights Reserved

Copyright The Institute of Electrical and Electronics Engineers, Inc.
Provided by IHS under license with IEEE
No reproduction or networking permitted without license from IHS Not for Resale