IEEE Guide for Measurement of Impedance and Safety Characteristics of Large, Extended or Interconnected Grounding Systems

Sponsor
Power System Instrumentationand Measurements Committee
of the
IEEE Power Engineering Society

Approved December 5, 1991

IEEE Standards Board

Abstract: Practical instrumentation methods are presented for measuring the ac characteristics of large, extended or interconnected grounding systems. Measurements of impedance to remote earth, step and touch potentials, and current distributions are covered for grounding systems ranging in complexity from small grids (less than 900 m^2), with only a few connected overhead or direct burial bare concentric (2) neutrals, to large grids (greater than 20 000 m^2), with many connected neutrals, overhead ground wires (sky wires), counterpoises, grid tie conductors, cable shields, and metallic pipes. This standard addresses measurement safety; earth-return mutual errors; low-current measurements; power-system staged faults; communication and control cable transfer impedance; current distribution (current splits) in the grounding system; step, touch, mesh, and profile measurements; the foot-equivalent electrode earth resistance; and instrumentation characteristics and limitations.
Keywords: Grounding systems, impedance, safety

The Institute of Electrical and Electronics Engineers, Inc.
345 East 47th Street, New York, NY 10017-2394, USA

Copyright © 1992 by the
The Institute of Electrical and Electronics Engineers, Inc.

All rights reserved. Published 1992
Printed in the United States of America
ISBN 1-55937-187-0

No part of this publication may be reproduced in any form, in an electronic retrieval system or other wise, without the prior written permission of the publisher.

Copyright The Institute of Electrical and Electronics Engineers, Inc.
Provided by IHS under license with IEEE
No reproduction or networking permitted without license from IHS
Not for Resale

IEEE Standards documents are developed within the Technical Committees of the IEEE Societies and the Standards Coordinating Committees of the IEEE Standards Board. Members of the committees serve voluntarily and without compensation. They are not necessarily members of the Institute. The standards developed within IEEE represent a consensus of the broad expertise on the subject within the Institute as well as those activities outside of IEEE that have expressed an interest in participating in the development of the standard.

Use of an IEEE Standard is wholly voluntary. The existence of an IEEE Standard does not imply that there are no other ways to produce, test, measure, purchase, market, or provide other goods and services related to the scope of the IEEE Standard. Furthermore, the viewpoint expressed at the time a standard is approved and issued is subject to change brought about through developments in the state of the art and comments received from users of the standard. Every IEEE Standard is subjected to review at least every five years for revision or reaffirmation. When a document is more than five years old and has not been reaffirmed, it is reasonable to conclude that its contents, although still of some value, do not wholly reflect the present state of the art. Users are cautioned to check to determine that they have the latest edition of any IEEE Standard.

Comments for revision of IEEE Standards are welcome from any interested party, regardless of membership affiliation with IEEE. Suggestionsfor changes in documents should be in the form of a proposed change of text, together with appropriate supporting comments.

Interpretations: Occasionally questions may arise regarding the meaning of portions of standards as they relate to specific applications. When the need for interpretations is brought to the attention of IEEE, the Institute will initiate action to prepare appropriate responses. Since IEEE Standards represent a consensus of all concerned interests, it is important to ensure that any interpretation has also received the concurrence of a balance of interests. For this reason IEEE and the members of its technical committees are not able to provide an instant response to interpretation requests except in those cases where the matter has previously received formal consideration.

Comments on standards and requests for interpretations should be addressed to:

Secretary, IEEE Standards Board
445 Hoes Lane
P.O. Box 1331
Piscataway, NJ 08855-1331
USA

IEEE Standards documents are adopted by the Institute of Electrical and Electronics Engineers without regard to whether their adoption may involve patents on articles, materials, or processes. Such adoption does not assume any liability to any patent owner, nor does it assume any obligation whatever to parties adopting the standards documents.

Copyright The Institute of Electrical and Electronics Engineers, Inc.
Provided by IHS under license with IEEE
No reproduction or networking permitted without license from IHS
Not for Resale

Foreword

(This foreword is not a part of IEEE Std 81.2-1991, IEEE Guide for Measurement of Impedance and Safety Characteristics of Large, Extended or Interconnected Grounding Systems.)

During the late 1970's, in an effort to increase its usefulness, this guide was divided into two parts. The first part is entitled IEEE Std 81-1983, IEEE Guide for Measuring Earth Resistivity, Ground Impedance, and Earth Surface Potentials of a Ground System. It covers the majority of field measurements that do not require special high-precision equipment and measuring, and that do not encounter unusual difficulties such as may be found with extensive grounding systems, abnormally high stray ac or dc currents, etc. IEEE Std 81 (Part I) has been extensively revised and updated. Part I was approved in 1983 and reaffirmed in 1991. This part of the guide (Part II) is entitled IEEE Std 81.2-1991, IEEE Guide for Measurement of Impedance and Safety Characteristics of Large, Extended or Interconnected Grounding Systems. This new part covers measurement of very low values of ground impedance (less than 1 Ω). The extensive use of specialized instrumentation, measuring techniques, and safety aspects are incorporated.

This guide was prepared by the Measurement of Impedance and Safety Characteristics of Large, Extended or Interconnected Grounding Systems Working Group of the RLC Measurements Subcommittee of the Power Systems Instrumentation and Measurements Committee of the IEEE Power Engineering Society.

At the time that this standard was completed, the working group had the following membership:

D. Mukhedkar, *Chair*
J. White, *Secretary*
E. Rogers, *Technical Editor*

G. Y. R. Allen
M. J. Anna
E. P. Dick
J. Fortin
W. Hardy
P. Kouteynikoff
J. F. Laidig
R. Malewski
A. Pessonen
R H. Reynolds
H. Sarmiento
A. N. Sharaf
E. Smithson
L. Thione
W. Velazquez

At the time that it balloted and approved this standard for submission to the IEEE Standards Board, the Power Systems Instrumentation and Measurements Committee had the following membership:

A. Abramowitz
J. Anderson
J. M. Belanger
J. M. Carr
C. Carrara
L. Coffeen
S. W. Crampton
F. C. Creed
V. DaGrosa
A. E. Emmanuel
G. J. Fitzpatrick
R. E. Hebner
R. Hopkins
P. B. Jacob
W. A. Keagle, Jr.
H. Kirkham
J. A. Kise
S. R. Knudsen
J. Kuffel
D. W. Lenk
F. J. Levitsky
R. Malewski
D. McAuliff
T. R. McComb
J. H. Moran
D. Mukhedkar
O. Petersons
R. Reid
P. H. Reynolds
R. L. Richardson
A. F. Rohlfs
H. M. Schneider
J. C. Smith
E. So
G. E. Stemler
D. Train
R. S. Turgel
J. M. Vanderleck
C. F. Von Herrmann
B. H. Ward
D. L. Whitehead

Copyright The Institute of Electrical and Electronics Engineers, Inc.
Provided by IHS under license with IEEE
No reproduction or networking permitted without license from IHS
Not for Resale

When the IEEE Standards Board approved this standard on December 5, 1991, it had the following membership:

Marco W. Migliaro, *Chair*
Donald C. Loughry, *Vice Chair*
Andrew G. Salem, *Secretary*

Dennis Bodson	Donald N. Heirman	Lawrence V. McCall
Paul L. Borrill	Kenneth D. Hendrix	T. Don Michael*
Clyde Camp	John W. Horch	Lloyd A. "Pete" Morley
James M. Daly	Ben C. Johnson	Stig L. Nilsson
Donald C. Fleckenstein	Ivor N. Knight	John L. Rankine
Jay Forster*	Joseph Koepfinger*	Ronald H. Reimer
David F. Franklin	Irving Kolodny	Gary S. Robinson
Ingrid Fromm	Michael A. Lawler	Terrance R. Whittemore
Thomas L. Hannan	John E. May, Jr.	

*Member Emeritus

Also included are the following nonvoting IEEE Standards Board liaisons:

Fernando Aldana	James Beall	Stanley Warshaw
Satish K. Aggarwal	Richard B. Engelman	

Adam Sicker
IEEE Standards Project Editor

Copyright The Institute of Electrical and Electronics Engineers, Inc.
Provided by IHS under license with IEEE
No reproduction or networking permitted without license from IHS
Not for Resale

CLAUSE PAGE

1. Purpose 1

2. Scope 1

3. References 2

4. Safety Practices 3

4.1 General Precautions 3
4.2 Safety Aspects of Test Preparations 3
4.3 Safety Aspects of Test Measurements 4

5. Factors Effecting Grounding System Measurements 4

6. Preliminary Planning and Procedures 6

6.1 Distance to Current and Potential Test Electrodes 6
6.2 Selection of Test-Conductor Routing and Test-Probe Locations 6
6.3 Determining the Effect of Overhead-Ground-Wire Shielding on Test Current Distribution 7
6.4 Estimating Grounding Grid Impedance 7
6.5 Estimating Minimum Test Current 7
6.6 Test Current Sources 7
6.7 Estimating Test-Current Source Requirements 8
6.8 Remote Rod Electrode Current Capacity 8
6.9 Potential Input Impedance 9
6.10 Determining Grounding System Connection Condition 9
6.11 Establishing the Measurement Point on a Grounding System 9

7. Earth-Return Mutual Effects When Measuring Grounding-System Impedance 9

7.1 Introduction 9
7.2 Measurement Error Due to Earth Mutual Resistances 10
7.3 Measurement Error Due to AC Mutual Coupling 10
7.4 Mutual Coupling to Potential Lead From Extended Ground Conductors 12

8. Measurement of Low-Impedance Grounding Systems by Test-Current Injection 12

8.1 Introduction 12
8.2 Signal Generator and Power Amplifier Source 13
8.3 Portable Power-Generator Source 16
8.4 Power System Low-Voltage Source 20

9. Measurement of Low-Impedance Grounding Systems by Power System Staged Faults 23

9.1 Introduction 23
9.2 Fault Configurations 24
9.3 Fault Initiation 24
9.4 Current Measurements 25
9.5 Potential Measurements 25
9.6 Interference Reduction 27
9.7 Calibration 28

Copyright The Institute of Electrical and Electronics Engineers, Inc.
Provided by IHS under license with IEEE
No reproduction or networking permitted without license from IHS
Not for Resale

CLAUSE PAGE

10. Current Distribution in Extended Grounding Systems 30

10.1 Introduction 30
10.2 Test Considerations 31
10.3 Analysis of Current Distribution in a Grounding System (See [B25] and [B44]) 33
10.4 Induced Current in the Angled Overhead Ground Wire 37
10.5 Current Distribution During a Staged Fault Test (See [B44]) 41

11. Transfer Impedances to Communication or Control Cables 49

12. Step, Touch, and Voltage-Profile Measurements 51

12.1 General Requirements 51
12.2 Grid Safety Requirements 52
12.3 Footprint-Electrode Method 52
12.4 Test-Probe Method 52
12.5 Simulated-Personnel Method (See [B24]) 54

13. Instrumentation Components 56

13.1 Introduction 56
13.2 Direct-Reading Ohmmeters 57
13.3 Electromagnetic Oscillograph 57
13.4 Tuned Voltmeter 58
13.5 Fast Fourier Transform Analyzer 58
13.6 Sine Wave Network Analyzer 58
13.7 Staged Fault 59
13.8 Switched Power-Frequency Source 59
13.9 Welding Set or Portable Power Generator 59
13.10 Low-Power Sine Wave Source 60
13.11 Low-Power Random Noise Source 60
13.12 Periodic (Nonsinusoidal) Generator 60
13.13 Power-System Switching Transient 60
13.14 Pulse Generator 61
13.15 Current Transformer (CT) 61
13.16 Resistive Shunt 61
13.17 Inductive Current Pickup 61
13.18 Hall-Effect Probe 62
13.19 Remote Synchronization of Test Signal 62
13.20 Measurement Environment and Signal Transmission 62

14. Instrument Performance Parameters 64

14.1 Reading Accuracy 64
14.2 Selectivity 64
14.3 Impedance Phase Discrimination 67
14.4 Current Level 68
14.5 Test Frequency and Current Waveform 68
14.6 Measurement Error Reduction (See [B25]) 69

15. Bibliography 69

--`,,`-`-`,,`,,`,`,,`---

Copyright The Institute of Electrical and Electronics Engineers, Inc.
Provided by IHS under license with IEEE
No reproduction or networking permitted without license from IHS Not for Resale

CLAUSE PAGE

Annex A Mutual Impedance Between Horizontal Earth-Return Conductors and the Self Impedance of a Horizontal Earth-Return Conductor Based on the Complex Image Plane Concept (See [11]) (Informative) 73

Annex B Mutual Impedance Between Finite Length Conductors Lying on the Ground Based on the Campbell/Foster Method (Informative) 84

Annex C Earth Return Impedance of a Grid-Tie Conductor (Informative) 89

Annex D Parallel Impedance of an Overhead Ground Wire and a Buried Counterpoise Conductor (Informative) 91

Copyright The Institute of Electrical and Electronics Engineers, Inc.
Provided by IHS under license with IEEE
No reproduction or networking permitted without license from IHS
Not for Resale

IEEE Guide for Measurement of Impedance and Safety Characteristics of Large, Extended or Interconnected Grounding Systems

1. Purpose

The purpose of this guide is to present practical instrumentation methods that may be used for the measurement of impedance to remote earth, step and touch potentials, and current distributions of large extended or interconnected grounding systems ranging in complexity from small grids (less than 900 m^2), with only a few connected overhead or direct burial bare concentric neutrals, to large grids (greater than 20 000 m^2), with many connected neutrals, overhead ground wires (sky wires), counterpoises, grid tie conductors, cable shields, and metallic pipes.

2. Scope

Test methods and instrumentation techniques used to measure the ac characteristics of large grounding systems include the following topics:

1) Measurement safety
2) Earth-return mutual errors
3) Low-current measurements
4) Power-system staged faults
5) Communication and control cable transfer impedance
6) Current distribution (current splits) in the grounding system
7) Step, touch, mesh, and profile measurements
8) The foot-equivalent electrode earth resistance
9) Instrumentation characteristics and limitations

Grounding electrodes consisting of a single ground rod, arrays of ground rods, tower footings, and many grids (if no external grounding is connected) can be measured, interference voltages permitting, with methods outlined in IEEE Std 81-1983 [2][1]. Even if a large grid has an impedance phase angle of 18° the resistance component will be only 5% lower than its impedance. However, for large grounding grids in low-resistive earth (<75 Ω-m) and for grounding

[1]The numbers in brackets correspond to those of the references in Section 3.

Copyright © 1992 IEEE All Rights Reserved

Copyright The Institute of Electrical and Electronics Engineers, Inc.
Provided by IHS under license with IEEE
No reproduction or networking permitted without license from IHS
Not for Resale

systems that have numerous extended grounding conductors, the impedance could be significantly greater than the resistive component measured with the conventional test sets of IEEE Std 81-1983 [2].

Measurement of low-impedance grounding-system characteristics, with injection currents between 0.1–100 A, using techniques described in Section 8. is generally preferred. Or, grounding-system parameters may be measured or verified under power-system conditions with the staged-fault methods of Section 9. Due to the diversity in station grounding configurations and the variety of possible test connections, this guide cannot narrowly define the test method for each application. The user must take responsibility for the adequacy of the method selected (see Section 13. for a review of instrumentation components).

3. References

[1] IEEE Std 80-1986 (Reaff 1991), IEEE Guide for Safety in AC Substation Grounding (ANSI)[2]

[2] IEEE Std 81-1983, IEEE Guide for Measuring Earth Resistivity, Ground Impedance, and Earth Surface Potentials of a Ground System (Part I).

[3] IEEE Std 367-1987, IEEE Recommended Practice for Determining the Electric Power Station Ground Potential Rise and Induced Voltage From a Power Fault (ANSI).

[4] IEEE Std 487-1992, IEEE Guide for the Protection of Wire Line Communications Facilities Serving Electric Power Stations (ANSI).

[5] Duke, C. and Smith, L. “Ground Impedance Component Measurement,” AIEE Conference Paper, CCC, pp. 714–720, 1957.

[6] Duke, C. and Smith, L. “The Technique and Instrumentation of Low-Impedance Ground Measurement,” *AIEE Transactions*, vol. 77, Part I, pp. 767–770, 1958.

[7] EPRI EL-904, Mutual Design Considerations for Overhead AC Transmission Lines and Gas Transmission Pipelines. Project PRI32-80.

[8] Meyer, W. S. and Dommel, H. W. “Telephone-Interference Calculation for Multiconductor Power Lines,” *IEEE Transactions on Power Apparatus and Systems*, vol. PAS-88, no. 1, pp. 35–41, Jan. 1969.

[9] Patel, S. G. “A Complete Field Analysis of Substation Ground Grid by Applying Continuous Low Voltage Fault,” *IEEE Transactions on Power Apparatus and Systems*, vol. PAS-104, pp. 2238–43, Aug. 1985.

[10] Rogers, E. J. “Instrumentation Techniques in High Voltage and Substations; Part 1, Measuring, Triggering, and Interference Reduction; Part 2, Measuring Devices and Circuits,” *IEEE Transactions on Power Apparatus and Systems*, vol. PAS-92, no. 1, pp. 127–138, Jan./Feb. 1973.

[11] Rogers, E. J. and White, J. F. “Mutual Coupling Between Finite Lengths of Parallel or Angled Horizontal Earth Return Conductors,” *IEEE Transactions on Power Delivery*, vol. 4, no. 1, pp. 103–113, Jan. 1989.

[12] Sorbal, S. T., Harta Santos, J. J., and Mukhedkar, D. “A Proposal for Ground Measurement Techniques in Substations Fed Exclusively by Cables,” *IEEE Transactions on Power Delivery*, vol. 3, no. 4, pp. 1403–09, Oct. 1988.

[13] Steinmetz, C. P. *Engineering Mathematics*. New York: McGraw-Hill Book Co., 1917.

[2]IEEE Publications are available from the Institute of Electrical and Electronics Engineers, Service Center, 445 Hoes Lane, P.O. Box 1331, Piscataway, NJ 08855-1331, USA.

 Copyright © 1992 IEEE All Rights Reserved

Copyright The Institute of Electrical and Electronics Engineers, Inc.
Provided by IHS under license with IEEE
No reproduction or networking permitted without license from IHS Not for Resale

[14] Velazquez, R., Reynolds, P.H., and Mukhedkar, D. “Earth-Return Mutual Coupling Effects in Ground Resistance, Measurements of Extended Grids,” *IEEE Transactions on Power Apparatus and Systems*, vol. PAS-102, no. 6, pp. 1850–1857, Jun. 1983.

4. Safety Practices

The rules and procedures summarized in the following paragraphs are recommended to be used as reminders of possible hazards and to serve as guides in preparing safe test methods. Utilities should modify the suggested procedures to conform with their own conditions and safety regulations.

4.1 General Precautions

Test methods described in this guide require test connections between the grid and locations on the earth remote from the grid. Extended test leads, out-of-service transmission lines used in the current circuit, and the power system connected to the substation under test present a high degree of exposure to atmospheric disturbances or power system line-to-ground faults and ground potential rise (GPR). The following precautionary measures are recommended:

1) Do not schedule field measurements of either the power system grounding, during periods of forecast lightning activity, in areas (determined by conditions at each utility) that encompass the station being measured or of the power network connected to the station being measured.
2) Do not lay out test leads or connect test leads to out-of-service transmission lines during a period when lightning is prevalent.
3) When test procedures are not in progress, externally routed test leads should be disconnected and isolated from the grid and treated as being energized.
4) In the event lightning appears in the zone defined above when test procedures are underway, stop all testing, open the test connection to the out-of-service transmission line, and isolate from the grid any temporarily installed test conductors routed externally to the grid.

4.2 Safety Aspects of Test Preparations

Preparations for field measurements of system grounding leave participating personnel vulnerable to exposure caused by faults at or powerfed from the grounding under test, transferred potentials from remote test grounds, and inadvertent line energizations.

While the probability of the occurrence of one of these events is low, personal safety will, nevertheless, be enhanced by

1) Using high-voltage rated insulated gloves and boots, eye protection, and hard hats.
2) Working on clean, dry crushed rock or an insulating blanket.
3) Avoiding bare hand-to-hand contact between equipment and extended test leads.
4) Sufficiently insulating the voltage or current probe test conductor within the station and its close neighborhood.
5) Ensuring that the cable reel is well insulated or mounted on an insulated platform.
6) Connecting safety grounds (sized for fault levels) to all equipment frames.
7) Making connections to instrumentation only after cable-pulling personnel are in the clear (radio communication recommended).
8) Removing working grounds on the test circuit last.

It is recommended that test procedures, hazardous conditions, and the responsibilities of each person be discussed and understood by everyone taking part in the test.

Copyright © 1992 IEEE All Rights Reserved

Copyright The Institute of Electrical and Electronics Engineers, Inc.
Provided by IHS under license with IEEE
No reproduction or networking permitted without license from IHS Not for Resale

Safety can be heightened by the use of a disconnector or switch to isolate the current source and the voltage-probe circuit when no measurement is being made. When grid rise exceeds several hundred volts, the measuring instrument should, if possible, be connected through instrument transformers or resistance voltage dividers. If a capacitor in series with the current circuit is employed, it should be located at the line entrance.

A current-injection high-voltage line must be earthed at both ends when the test is under preparation. The injection end cannot be grounded during the actual measurement. However, a safety spark gap or arrestor with a sparkover voltage of 2 to 4 kV is advisable at the line entrance, in view of possible atmospheric overvoltages, fault-related ground rise, or inadvertent energizing of the line. Moreover, the circuit should not be touched after removal of the temporary grounding.

> *WARNING: When the out-of-service transmission line shares a common right-of-way with energized lines, hazardous voltages may exist at the line termination due to induction.*

4.3 Safety Aspects of Test Measurements

After completion of the test set-up, it is essential that one person (usually the test supervisor) coordinate all switching operations, maintain control of connections made to all externally routed circuits, and authorize all test energizations. No personnel shall be permitted to work on or touch the test circuit without clearance from the test coordinator. During modifications of the test circuit, it is recommended that all safety practices outlined in 4.1 and 4.2 be followed along with those additional rules instituted by each utility.

From the standpoint of safety rules, a test that applies the 10 to 100 A current injection method should be considered as corresponding to a prolonged earth fault; and an earth-fault test should be considered as corresponding to a fast-tripped earth fault. Thus, the test currents should be such that the rules with regard to the touch-voltage, transferred-potential, and induced-potential limits for earth faults are respected.

It is recommended that all personnel present in the substation under study be informed of the nature of the tests, in particular of the consequences of current circulating in the ground.

Measurement of a grounding system with low impedance will require higher magnitude test currents to have an adequate signal-to-noise level and improved sensitivity. When tower footings, guy anchors, or ground rods are used for the injection-current remote electrodes, the possibility that their potentials could be hazardous must be considered. Selection of higher test currents (above 40 mA) raises the questions of safety for measurement personnel, the public, and domestic animals that could come in contact with remote-current-electrode potentials. Where temporary ground rods are used, every effort should be made to reduce the current-electrode resistance, e.g., paralleling several rods, salting, and using longer rods. Nevertheless, in high-resistivity earth, it may not be possible to reduce the current-probe resistance to less than 200 Ω. Even at 0.5 A, this would result in a 100 V probe rise. For current-probe voltages above some minimal value (20–40 V), it is recommended that a safety watcher and temporary fencing be provided during test energization.

5. Factors Effecting Grounding System Measurements

Measurement of grounding system impedance less than 0.5 Ω with injected test currents 0.1–100 A in conjunction with energized substations and transmission lines has numerous characteristics that introduce complications and impose constraints on the measurement technique:

1) Background voltage and noise resulting from conductive coupling
   a) Unbalanced load-current flow through the grounding impedance.

Copyright © 1992 IEEE All Rights Reserved

Copyright The Institute of Electrical and Electronics Engineers, Inc.
Provided by IHS under license with IEEE
No reproduction or networking permitted without license from IHS Not for Resale

b) Harmonic-current flow through the grounding impedance.
c) Induced currents in extended ground conductors circulating through grid.
d) Impulse-type noise induced into the grounding system.
e) Telluric stray currents.

2) Electromagnetic interference resulting from mutual coupling
   a) Induced voltages in the test circuit due to paralleling with a current-carrying bus and/or lines (magnetic coupling).
   b) Induced voltages in the test circuit due to proximity with an energized bus and/or lines (capacitive coupling).
3) Measurement considerations
   a) For measuring the 60 Hz grounding-system impedance, the test-current frequency should be between 50–70 Hz.
   b) For the grounding impedance of the grounded-wye shunt capacitor energization in-rush currents, the single-frequency test current should be between 300–600 Hz.
   c) Mutual coupling between the current test conductor and the potential test conductor will introduce an error in the measured impedance (see Section 7.).
   d) Mutual coupling between extended ground conductors that conduct the test current to earth and the potential test conductor will give a lower measured impedance.
   e) Locating the current or potential remote test electrode near grounded metal structures, buried neutrals, aerial neutral grounds, or buried ground conductors that connect to the grounding system under test will result in a lower measured impedance. In urban areas, these components effectively enlarge the power-system grounding and make it difficult to reach remote earth.
   f) Earth voltage drops for electrodes in the grounding system are linear with current because the voltage gradients appearing during power-system faults are well below the breakdown level of earth.
   g) High resistance or corroded connections between grid and grounding system components, the current nonlinearity of steel overhead ground conductors (sky wires) when connected to the grid, and the nonlinearity of mechanical joints connecting overhead ground wires to tower can give a high measured impedance (see 14.4).
   h) When a transmission line with a continuous overhead ground wire (grounded to grids at both ends and each tower) is used as a current path between the ground system under test and the remote current electrode (grid), consideration of the mutual coupling (shielding) between transmission line and sky wire is required in order to determine the portion of the test current that flows through the grounding system to earth (see 6.3 and Section 10.).
   i) All components of the grounding system should be connected.
   j) Out-of-service transmission lines should be grounded to the grid.

In the presence of background and interference voltages, the measurement accuracy will depend mainly on the length and routing of the test conductors, the magnitude of the test current (and the resulting voltage drop across grounding impedance), and the selectivity and sensitivity of the method used to measure the potential magnitude and its phase angle relative to the current. In general, high background levels, broad instrumentation frequency response, low grounding impedance, and/or tests at the power-system frequency will require the larger test currents. High interference levels can overload or even damage electronic equipment.

Because changing weather, power system load variations, and system switching modify many of the above factors, the test environment can change hour-to-hour.

The inductive component of impedance, mutual coupling, and earthing resistance of buried conductors does not necessarily change linearly with frequency. Therefore, to minimize errors in correcting for frequency, a test-current frequency near that of the power system is recommended [see item (3) above].

In those grounding systems containing nonlinear elements, such as steel overhead ground wires and corroded or high-resistance connections [see item (3) above], test currents high enough to produce 10 V or more across the grounding

Copyright © 1992 IEEE All Rights Reserved

Copyright The Institute of Electrical and Electronics Engineers, Inc.
Provided by IHS under license with IEEE
No reproduction or networking permitted without license from IHS Not for Resale

impedance may overcome these nonlinearities and improve measurement accuracies, see [B25][3] and [B44]. Overhead ground wires that do not have bolted connections to towers will require the highest voltage drop.

6. Preliminary Planning and Procedures

Test voltage sources used for injecting current into the grounding system introduce many ramifications to the accurate measurement of impedance, safety characteristics, and current distributions in the grounding system. Consideration of the following items will be necessary before undertaking the test set-up or making test measurements.

6.1 Distance to Current and Potential Test Electrodes

Accuracy of grounding resistance/impedance measurement depends on locating test electrodes at remote earth. The minimum distance to test probes that will have an approximate measurement accuracy of 95% may be estimated by 6.5 times the extent of the grounding system (see 8.1). The extent of a grounding system for an isolated grid is its maximum diagonal distance. Or, when external buried conductors are connected, it may be approximated by the maximum grid dimension plus the effective length of a buried conductor if in one direction, or plus each buried conductor length if in opposite directions. Note that the effective length of a buried conductor, which was estimated from lossy transmission line formulas for 60 Hz, depends on earth resistivity and is approximately 500 m for 100 Ω-m earth, and 3 km for 10 000 Ω-m earth (see Appendix C).

6.2 Selection of Test-Conductor Routing and Test-Probe Locations

The current and potential test conductor routings and the location of current and potential remote electrodes should be determined; and test conductor lengths should be estimated from the station plot plan and area maps that show transmission lines, neutrals, buried conductors, communication cables, and piping locations.

To minimize measurement errors due to ac mutual coupling, the test potential conductor should be routed at 90° to the test current conductor. In grounding systems, in order to avoid mutual coupling with extended ground conductors and in-service transmission lines, it may be necessary to route at angles other than 90°. (See Section 7. for a discussion of mutual coupling errors between current and potential test conductors.)

Practically, when access is limited or when the grounding system includes a large number of extended conductors leaving the grid in diverse directions, test routings can only be selected so as to minimize these mutual couplings.

If existing duct-runs are used in the routing of the current and potential test conductors from the current injection point to the external test electrodes, it should be verified that there are no parallel sections.

If a telephone cable pair is to be used as a test conductor, it should be verified that it does not parallel overhead ground wires, power system neutrals, or extended grid conductors. If using a telephone cable pair or other test lead in a cable with a grounded shield, particular care should be taken that the test lead is connected to a low-resistance ground at the far end to avoid a possible erroneous measurement from the cable capacitance acting as a termination. *A telephone cable pair with its shield grounded should not be used within one grid diagonal of the grid or when its leakage resistance is less than 10 kΩ.* When, in addition to the ground-system impedance, measurements are being made for the purpose of designing protection of the telephone cable serving the power station, the use of a cable pair in that cable as a potential test lead may be desirable to measure the exposure (see Section 11.).

[3]The numbers in brackets, when preceded by the letter "B," correspond to the Bibliography in Section 15.

Copyright © 1992 IEEE All Rights Reserved

Copyright The Institute of Electrical and Electronics Engineers, Inc.
Provided by IHS under license with IEEE
No reproduction or networking permitted without license from IHS Not for Resale

6.3 Determining the Effect of Overhead-Ground-Wire Shielding on Test Current Distribution

When the current injection line parallels a branch of the grounding system extending from the grid, mutual coupling will induce a voltage in the paralleling branch that increases current flow in the branch. This induced current component will reduce the ground-system voltage rise and will have to be subtracted from the injected current to determine current flow through the grounding-system impedance. Refer to Section 10. for a discussion of current distribution in the grounding system.

6.4 Estimating Grounding Grid Impedance

The grounding system consists of the grid and all other extended grounding conductors connected to it. Grid resistance should be estimated using the IEEE Std 80-1986 [1] formula, the earth resistivity survey, and grid design drawings. Impedance of large grids (>40 000 m^2) buried in low-resistivity earth (<75 Ω-m) with no extended grounds connected may be higher than the estimated resistance. Or, when extended ground conductors are connected to the grid, grounding-system impedance will be less than estimated grid resistance [B31].

Formulas and calculator programs of EPRI EL-904 [7] give methods for calculating the input impedance of extended buried conductor with or without a terminating impedance. As the buried conductor length is increased, input impedance approaches the characteristic impedance, and the impedance phase angle will be in the 35° to 40° range. Refer to Appendix C for examples of buried conductor impedance. Overhead ground wires that connect to towers and grids will have impedance angles in the 50° to 85° range (see Eq 37).

6.5 Estimating Minimum Test Current

The background noise on the grid should be measured with a spectrum analyzer or frequency-selective voltmeter. The nearest frequencies above and below power-system frequency with lowest background levels should be determined. The bandwidth of the measuring instruments will determine their ability to attenuate background voltages. However, background levels are not locked in with the test frequency and may produce variations in the tunable voltmeter reading. If voltage swings at the selected frequency are averaged and background levels at the selected frequency remain constant, impedance measurements may be made when the grid voltage due to test current is above the background levels. Averaging is done automatically by the dual channel signal analyzer (see 8.2.2), in which case noise levels may be higher than test signals. When the grid rise due to the test current must be high enough to overcome poor connections or nonlinearities in the grounding system, (test current) (estimated impedance) should be made at least equal to 10 V (see 13.1[(5) *sine wave network analyzer*], 14.4, [B25] and [B44]).

6.6 Test Current Sources

Low-impedance large grounding systems used in high-voltage power systems may require higher test current than the built-in 5–40 mA source provided by ground testers. Current magnitude, 0.1–100 A, and frequency selection will depend on the above requirements and the test method used. The following sources (see Section 13.) have been used to successfully measure grounding impedances:

1) Low-power, random-noise source with amplifier (0.1–10 A), frequency range 10–600 Hz
2) Oscillator-amplifier with matching adjustable transformer (0.1–10 A), frequencies above and below the power system frequency
3) Power-system station service with auxiliary matching transformer (1–100 A) (current reversal method)
4) Portable power generator (50 to 100 A), frequencies above and below the power system frequency
5) Power-system staged fault

Copyright © 1992 IEEE All Rights Reserved

Copyright The Institute of Electrical and Electronics Engineers, Inc.
Provided by IHS under license with IEEE
No reproduction or networking permitted without license from IHS Not for Resale

6.7 Estimating Test-Current Source Requirements

Output voltampere requirements for the test-current source can be estimated from:

VA = (maximum test current required)^2 · [(estimated current-probe resistance) + (current-test-conductor impedance)]

When test current magnitudes are large (50–100 A), the current injection line is long (<20 km), and the current-circuit impedance has a large *X*/*R* ratio (2 to 20), test-current-source apparent power (in VA) requirements can be reduced for fixed test-current frequencies by using an appropriately voltage-rated capacitor bank in series with the test line to cancel the reactive portion of the injection circuit impedance. Equipment with a 60 Hz VA rating can be reduced with test energization times of 10–30 s and off times of 5–15 rain by utilizing the short-time thermal rating of the matching auxiliary transformer and the overvoltage rating of the capacitor bank.

NOTE — The test-current-conductor minimum size will depend on the test-current magnitude, the test duration, and the maximum allowable cable-probe impedance.

6.8 Remote Rod Electrode Current Capacity

When a test ground rod or an array of ground rods are temporarily installed for the remote current electrode, and test currents are in the range 1.0–10 A, consideration must be given to the earth's temperature rise, consequential moisture evaporation, and increasing electrode resistance. Increasing resistance results in more heating, higher probe potential, and possibly an inability to maintain a desired test current. The current-carrying capacity of a test rod may be estimated from its spherical equivalent and formulas derived by Rudenberg [B35].

Table 1 summarizes both continuous and short-time current ratings of a test rod for a 60 °C earth temperature rise as a function of earth resistivity and rod resistance.

Table 1—Current Rating of Test Ground Rods

		Earth Resistivity		Rod Resistance	
Rod Depth m	Diameter mm	Continuous A	1 min A	Continuous A	1 min A
0.3 (12 in)	15.9 (5/8 in)	$5.7/\sqrt{\rho}$	$23.7/\sqrt{\rho}$	$12.0/\sqrt{R}$	$49.9/\sqrt{R}$
0.6 (24 in)	15.9 (5/8 in)	$9.7/\sqrt{\rho}$	$69.2/\sqrt{\rho}$	$12.0/\sqrt{R}$	$85.4/\sqrt{R}$
1.0 (40 in)	15.9 (5/8 in)	$14.4/\sqrt{\rho}$	$152.5/\sqrt{\rho}$	$12.0/\sqrt{R}$	$126.7/\sqrt{R}$
3.0 (10 ft)	19.1 (3/4 in)	$36.8/\sqrt{\rho}$	$1019/\sqrt{\rho}$	$11.8/\sqrt{R}$	$327.5/\sqrt{R}$

where

R = $(\rho/2\pi L)$ [ln$(8L/D)$-1]
R = rod earth resistance, in Ω
ρ = earth resistivity, in Ω-m
L = rod depth, in m
D = rod diameter, in m

The current capability of a ground rod can be estimated with Table 1 by either knowing the earth resistivity or by measuring the rod's earth resistance. Current capacity increases with rod depth, inversely with test duration, inversely with the square root of resistivity or the rod earth resistance. Increased test current for short durations will require off times of 5–10 rain to allow earth temperatures to cool. Current capacity can be increased with an array of ground rods. However, to reduce mutual effects and to equalize current distribution in each rod, rod spacing should be at least five times rod depth. When it is desirable to reduce the watt capacity of the current test source, rod earth resistance can be

Copyright © 1992 IEEE All Rights Reserved

Copyright The Institute of Electrical and Electronics Engineers, Inc.
Provided by IHS under license with IEEE
No reproduction or networking permitted without license from IHS Not for Resale

lowered by pouring a water-salt solution into the rod's hole. Lowering-rod earth resistance will increase rod current capacity.

6.9 Potential Input Impedance

The input impedance of the potential measuring device, for 1% accuracy, must be 100 times or more the potential-cable impedance plus the potential-test-probe resistance. The resistance of the test conductor and potential electrode can be measured to the grid.

6.10 Determining Grounding System Connection Condition

Prior to the grounding-system impedance measurements, the connection integrity of the major grounding components connected to the grid should be established, either by inspection, by 10–100 A microvolt or millivolt drop dc tests, or by a micro-ohmmeter. This is especially important in older grounding systems in which low-resistance connections to the grid may have been destroyed by corrosion or system fault currents. Resistance measurements are made by injecting a dc current between the test point and a remote point on the grid 30 m or more away. Even if the connection under test is open, current flow may be by conductors that parallel the test connection. However, the potential between the injection point and the nearest point on the grid (2 to 10 m) 90° to 270° from the current injection line should be comparable with the estimated voltage drop of the tested section ($R = V_{dc}/I_{dc}$). Open or reduced connections in the grid are difficult to detect because of paralleling grid conductors.

The measurement of current in the grounding system branches during current injection can be used to verify the integrity of each extended grounding system branch (see Section 10.).

6.11 Establishing the Measurement Point on a Grounding System

It should be established, by a dc test method recommended in 6.10, that the test connection point to the grid has low resistance.

The point to which the current injection circuit is connected on the grounding system and the point of connection of the potential measurement circuit should be the same or very close together to avoid an unrealistically low measurement due to not measuring the voltage drop produced by the entire injected current. This is particularly true for large or distributed grounding systems.

It should be verified that the connection point is in the main body of the grounding system rather than some lightly connected peripheral grounding element such as a perimeter fence. Do not use a common lead to connect the current and potential measurement connections to the grounding system. These precautions are necessary to avoid unrealistically high measurements due to the impedance of the common connecting lead being in series with the true grounding impedance.

7. Earth-Return Mutual Effects When Measuring Grounding-System Impedance

7.1 Introduction

Fall-of-potential test methods described in this guide require an ac test source with frequencies near or at that of the power system to measure the grounding-system impedance (see Sections 5. and 6.). These test methods inherently can introduce three possible errors in the measured grounding-system impedance: (1) earth mutual resistance due to current flow through earth from the grid to the current probe, (2) ac mutual coupling between the current test lead and the potential test lead, and (3) ac mutual coupling between the extended ground conductor and the potential test lead.

Copyright © 1992 IEEE All Rights Reserved

Copyright The Institute of Electrical and Electronics Engineers, Inc.
Provided by IHS under license with IEEE
No reproduction or networking permitted without license from IHS Not for Resale

7.2 Measurement Error Due to Earth Mutual Resistances

Errors of measurement of the grounding-system impedance result from the mutual resistance between the grid and the potential probe, the mutual resistance between the current probe and the potential probe, and the mutual resistance between the current probe and the grid. These mutuals were described in Appendix C of IEEE Std 81-1983 [2]. Mutual resistance errors can be mitigated by adequate spacing between grid to potential probe, grid to current probe, and current probe to potential probe (see 6.1).

In homogenous earth and for probe spacings one grid diagonal or greater, the measurement error, R_e, due to earth resistance mutuals is given by

$$R_e = \frac{\rho}{2\pi}\left[\frac{1}{\sqrt{C_1^2 + P_1^2 - 2C_1P_1\cos\Phi_1}} - \frac{1}{C_1} - \frac{1}{P_1}\right] \quad (1)$$

where

C_1 = distance grid center to current electrode, in m
P_1 = distance grid center to potential electrode, in m
Φ_1 = angle between C_1 and P_1 (in Fig 7-1, Φ_{1a}, Φ_{1b}, Φ_{1c}), in degrees
ρ = earth resistivity, in Ω-m

The grid resistance, R_g, in Ω, is given by

$$R_g = R_s - R_e \quad (2)$$

where

R_s = the measured grid resistance, in Ω

The mutual earth resistance, R_e, will reduce to zero for a grid installed in homogeneous earth, when

P_1 and C_1 > maximum grid dimension, and
P_1 = 0.618 C_1 and $\Phi_1 = 0°$, or
P_1 = 1.618 C_1 and $\Phi_1 = 0°$ or
P_1 = C_1 and $\Phi_1 = 29°$

However, for a grid or grounding system buried in heterogeneous earth, containing externally routed ground conductors connected to the grid, these simplifying conditions are, at best, only approximate.

7.3 Measurement Error Due to AC Mutual Coupling

A second source of measurement error is the inductive coupling between the current and potential leads. This mutual coupling causes the ac test current in the current test lead to induce a voltage into the potential test lead that adds vectorially to the actual grid voltage.

Mutual impedance errors will be the largest when test conductors are paralleled. When the mutual impedance magnitude is equal to or greater than the grounding impedance, an error in calculating the mutual impedance components can result in a large error in the ground impedance determination. For this reason, it is recommended that large grounding systems be measured by angled conductors.

Ideally, if the angle between P and C is 90°, there is no ac mutual coupling. However, when performing field measurements, it is not always possible or practical to orient the test wires at a right angle. With an angle less than 90°,

Copyright © 1992 IEEE All Rights Reserved

--`,,`,,`-`-`,,`,,`,`,,`---

Copyright The Institute of Electrical and Electronics Engineers, Inc.
Provided by IHS under license with IEEE
No reproduction or networking permitted without license from IHS Not for Resale

any voltage produced in the potential lead, *P*, due to the coupling from current flowing in the current lead, *C*, is additive to the desired measured voltage and produces a measurement error. With angles greater than 90°, the opposite effect is present, namely; the mutually coupled voltage is negative and results in a reduction in the measured impedance. Because the mutual coupling is less in magnitude, orientations of 90–180° and 180–270° are preferred over those of 0–90° and 270–360°.

In Fig 7-1, the earth grid potential rise measured with the potential conductor, P_b, will not be effected by mutual coupling from the current conductor. However, the measured grid potential rise using either P_a or P_c will be altered by mutual coupling from the current conductor.

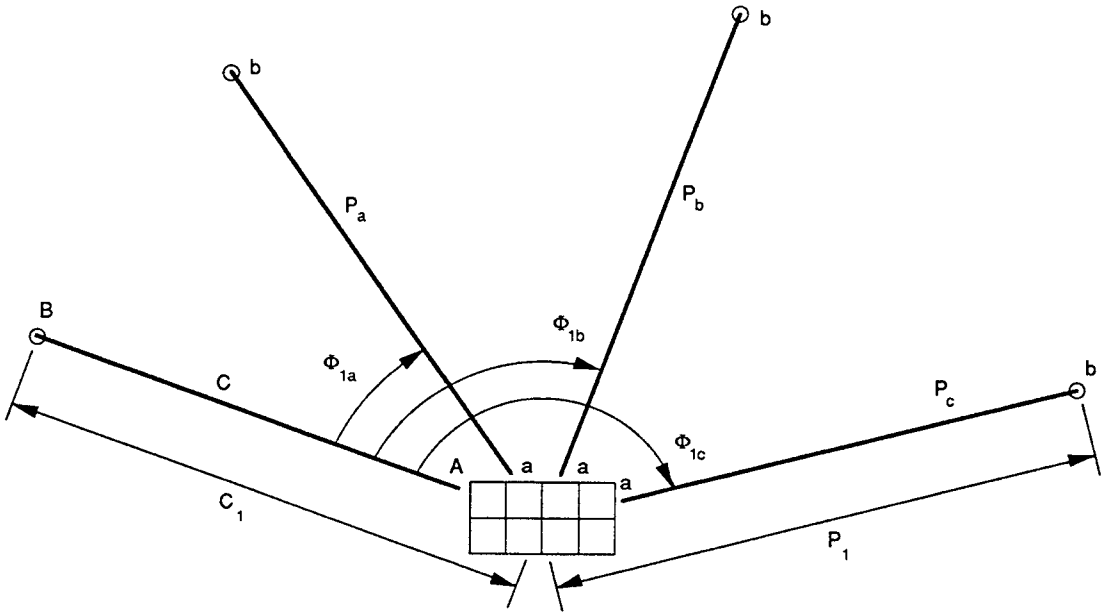

Figure 7-1—Possible Potential Test Lead Routings Relative to That of the Current Test Lead

When measuring grid impedance, the combined errors of earth mutual resistances and ac mutual coupling are expressed by the equation for measured impedance

$$Z_s = Z_g + R_e + Z_M \tag{3}$$

where

Z_g = actual grid impedance, in Ω (4)
$Z_M = R_M + jX_M$ mutual coupling between *C* and *P*, in Ω
Z_s = measured impedance and impedance angle, in Ω and degrees

or, grid impedance

$$Z_g = Z_s - R_e - Z_M \tag{5}$$

Copyright © 1992 IEEE All Rights Reserved

Copyright The Institute of Electrical and Electronics Engineers, Inc.
Provided by IHS under license with IEEE
No reproduction or networking permitted without license from IHS
Not for Resale

Mutual impedance errors resulting from the parallel orientation of test conductors can be approximated by Carson's formula for infinite conductors. However, the accuracy will depend on the length of the parallel conductor spacing, the frequency, and the earth resistivity approximation.

Formulas used to calculate the mutual impedance components of Eq 4 for finite length conductors of equal and unequal length, oriented either parallel or angled, are included in Appendixes A and B.

7.4 Mutual Coupling to Potential Lead From Extended Ground Conductors

Large grounding systems, besides the grid, may include buried neutrals, overhead neutrals, overhead ground wires, control and communication shields, buried bare grid-tie conductors, water pipes, gas lines, and railroad tracks. The extended nature of these components makes it difficult to route the potential test lead at right angles to each external pathway, thus introducing additional measurement error. The extended nature of these ground circuits requires longer test leads to reach remote earth.

If the grid conducts the bulk of the current to earth, or if the major portion of the external current flows in one direction, mutual coupling to the potential lead can be minimized by paralleling extended ground conductors with the least current. Major current paths in the grounding system can be either estimated from grounding configurations or established during current distribution measurements described in Section 10.

8. Measurement of Low-Impedance Grounding Systems by Test-Current Injection

8.1 Introduction

The fall-of-potential method is the fundamental method for measuring the ground impedance of large grounding systems (see 8.2.1.5 of IEEE Std 81-1983 [2]). As illustrated in Fig 8-1, this method of measuring ground impedance requires circulating a test current, I_s, between the ground system under study and a remote current electrode, C, while at the same time measuring the voltage, V_s, of the ground system relative to a reference potential electrode, P. In addition to the impedance, it is possible to measure the current distribution in the grounding system, the mutual impedance to the paralleling utility facilities, and step, touch, and profile voltages. Note that, to eliminate the measurement error due to the voltage drop in the test lead, as shown in Fig 8-1 and all following measurement schematics, a separate test lead is used for connecting the current loop and the potential circuit to the grid (see 6.11). Refer to 13.20 for a description of transient voltages that may be present during test measurements in energized substations.

The voltage, V_s, caused by the current, I_s, is measured by means of a high-impedance meter and an insulated probe wire extended from the ground system to a potential electrode some distance away. Preferably, this potential probe wire should be extended at an angle of 90° with respect to the current injection line to minimize mutual coupling between them. When the angle between the potential and the current test conductors is not 90°, the mutual-impedance correction methods of Section 7. require measurement of the phase angle between V_s and I_s of Fig 8-1.

As discussed in 6.1, locating the current and the potential probes approximately 6.5 times the extent of the grounding system will measure 95% of the grounding impedance. Then, to find the maximum value of V_s used to determine the grounding system impedance, the potential of the ground system should be measured with reference to a test-potential electrode placed at increasing distances from the ground system until the difference between two or three successive voltage readings is negligible (assuming the test current is held constant). Next, the current-probe distance should be increased significantly, and the potential measuring procedures should be repeated. Even under ideal conditions of perfectly homogeneous earth and no extended ground connections, a probe spacing extended to 50 times the maximum grounding system dimensions will give an expected measurement accuracy of only 98.5%. These measurement accuracies are estimated from Eqs 1 and 2 and the approximate grid resistance formula of IEEE Std 80-1986 [1].

Copyright © 1992 IEEE All Rights Reserved

Copyright The Institute of Electrical and Electronics Engineers, Inc.
Provided by IHS under license with IEEE
No reproduction or networking permitted without license from IHS Not for Resale

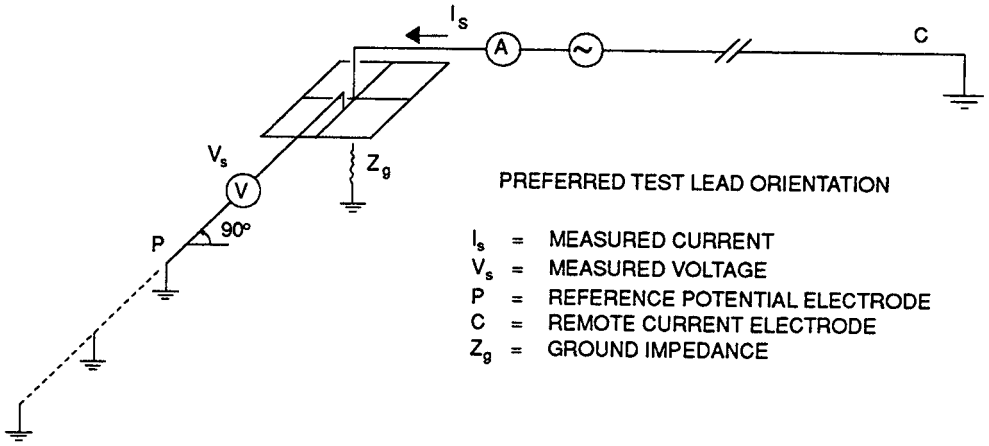

Figure 8-1—Impedance Measurement of the Grounding System

With the current and potential electrodes at remote earth, and assuming that the measurements are not influenced by mutual coupling or other interference, the grounding impedance may be found by Eq 6.

$$Z_g = \frac{V_s}{I_s} \tag{6}$$

Sources of current injection include either a signal generator plus power amplifier, a portable power generator, or an auxiliary matching transformer energized from a substation low-voltage source. Several signal detection techniques, described in this section, could be used with each of these test sources, although the current range is limited to 0.1 to 10 A. The signal generator source and power amplifier allow test frequencies to range from 50 to 600 Hz. The second and third methods allow higher currents (10 to 100 A or more) but are restricted to the power system frequency or frequencies close to the power system (50 to 70 Hz). Other combinations of current source and signal detector can be selected from the options detailed in Section 13.

8.2 Signal Generator and Power Amplifier Source

8.2.1 Tunable Voltmeter Method

One of the simplest instrumentation techniques used for impedance measurement, which utilizes equipment found in most utility test laboratories, is the tunable voltmeter method. In this method, an ac current (0.1–10 A) with a frequency close to the power-system frequency is used to measure the impedance, see [B46]. As shown in Fig 8-2, test equipment may consist of a 1:1 isolation transformer, a stable oscillator, a power amplifier with an internal or external matching transformer, *M*, a frequency-selective (tunable) voltmeter, and a resistive shunt, r_s. The test current may be measured by either the ammeter, *A*, the tunable voltmeter using the resistive shunt, r_s, or a current probe that converts milliamperes to millivolts. Measuring the current with the voltmeter is particularly useful in assuring that the oscillator and voltmeter frequencies have not drifted apart. It also improves the accuracy by using the same meter for both current and potential measurements. As mentioned in 6.7, current-source power requirements are determined by the test current magnitude, the current test-cable impedance, and the remote current-electrode (test probe) resistance. For a given test current, the power requirement can be directly lowered by the reduction of cable and probe resistance. Generally, a 100 W, 50–70 Hz source will suffice. However, in most cases, currents to 10 A can be obtained with amplifiers of 1.5 kW rating that are commercially available.

Copyright © 1992 IEEE All Rights Reserved

Copyright The Institute of Electrical and Electronics Engineers, Inc.
Provided by IHS under license with IEEE
No reproduction or networking permitted without license from IHS Not for Resale

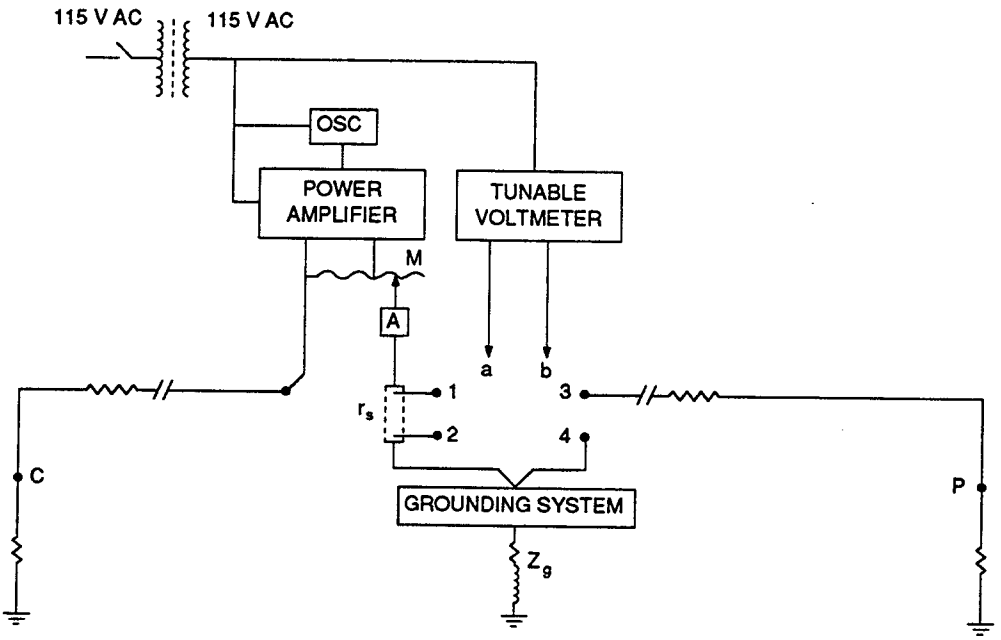

Figure 8-2—Tunable Voltmeter Method of Measuring Impedance

Measurement of only the magnitude of I_s and V_s, as above, permits calculation of only the magnitude of Z_g, and gives no information about the phase angle of the impedance. When a correction for mutual impedance errors (see Section 7.) is required, the phase angle between V_s and I_s can be determined by the three-voltmeter technique shown in Fig 8-3. The measurement error in this determination can be minimized by selecting the resistance value of shunt, r_s, which gives approximately equal values for V_s and V_r.

If conditions permit, it is recommended that the impedance be measured at a test frequency both above and below the power-system frequency. Then by interpolation, the ground-system impedance at power system frequency can be determined. After a test setup similar to Fig 8-2 is completed, and with the current test probe at remote earth, the following test procedures are recommended:

1) Scan the frequency band above and below (±10 Hz) the power-system frequency to find a low-noise "window" in the ambient noise. Some users of this method have found such a window in the range of 65–68 Hz, see [B46].
2) Set the oscillator frequency at the selected frequency. Tune the frequency-selective voltmeter to the oscillator frequency.
3) Adjust the amplifier output to the selected current (measure the potential from point 1 to point 2 with the voltmeter; a current of 0.5 A is often suitable). In order to obtain the rated output of the amplifier, it may be necessary to use an adjustable matching transformer (*M* in Fig 8-2) between the amplifier and the current test circuit.
4) Measure the potential between the grounding system (grid) and the remote potential electrode, i.e., between points 3 and 4.

   NOTE — A power-frequency rejection filter may be required ahead of the tunable voltmeter if the grid and the remote potential leads have high ambient power-system voltages.

5) Repeat steps (1) through (4) for the other more distant remote potential electrode locations until an asymptotic value of Z_g has been obtained.

Copyright © 1992 IEEE All Rights Reserved

Copyright The Institute of Electrical and Electronics Engineers, Inc.
Provided by IHS under license with IEEE
No reproduction or networking permitted without license from IHS Not for Resale

6) If an impedance angle is required, the voltages across points 1–2, 3–4, and 3-1 (Figs 8-2 and 8-3) can be measured during steps (3) and (4) and the phase angle (Φ_s) between V_s and I_s calculated with Eq 7.
7) Any drift in the oscillator frequency or in the tunable voltmeter response between readings will result in large measurement errors. For field use in cold weather, it is advisable to provide an enclosure with auxiliary heat to maintain a warm, stable ambient temperature for the test instruments.

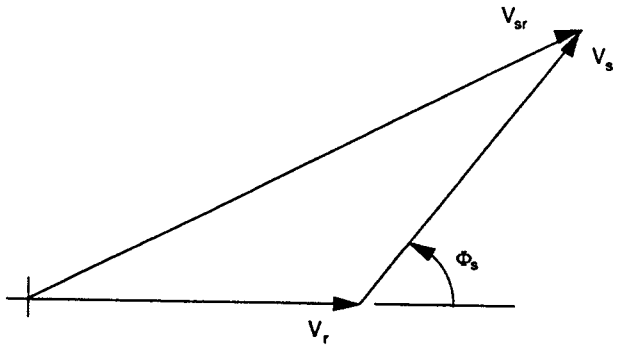

MEASURED POTENTIAL	DESIGNATION	VOLTMETER CONNECTIONS (Fig 8.2) a to	b to
SHUNT	$V_r = r_s I_s$	1	2
GRID	V_s	3	4
SHUNT-GRID	V_{sr}	3	1

$$\cos\Phi_s = \frac{V_{sr}^2 - V_s^2 - V_r^2}{2V_sV_r} \quad (7)$$

and Φ_s is the grounding system impedance angle

Figure 8-3—Phasor Diagram for the Three-Voltmeter Method of Impedance Angle Determination

8.2.2 Dual-Channel Network Analyzer Method

The signal analyzer method (see [B8], [B26], and [B37]) determines automatically, from current and potential measurements, the grounding-system impedance and impedance angle using a frequency-scanning technique. This method allows for a complete plot of the impedance and phase angle over a frequency range that may be selected to encompass both the power system frequency and switching transient frequencies conducted by the grid to earth.

The instrumentation connections shown in Fig 8-4 are similar in principle to those of Fig 8-1, and will require all of the considerations discussed earlier. The current source may consist of either a sinusoidal generator or a pseudo-random noise generator, a noise conditioning filter, and a power amplifier of about 1.5 kW. As an example, the bandwidth of the noise source can be set from 0 Hz to 400 Hz. An external filter would be used to limit the noise signal to a range of 10 to 400 Hz in order to protect the power amplifier output transformer and the power transistors from the effects of low-frequency saturation. The current and voltage signals are first filtered, then digitized, and transformed into the frequency domain through a Fast Fourier Transform (FFT) routine. Using the transfer function of the spectrum

Copyright © 1992 IEEE All Rights Reserved

Copyright The Institute of Electrical and Electronics Engineers, Inc.
Provided by IHS under license with IEEE
No reproduction or networking permitted without license from IHS Not for Resale

analyzer, the display (either CRT or X-Y plotter) shows the impedance magnitude and phase angle over the selected frequency range. To reduce the effect of background voltages and improve measurement accuracy, the FFT analyzer is programmed to make repeated measurements, which are added and averaged several times to obtain the final impedance and phase-angle plot. Additional applications for the signal analyzer are included in 13.5.

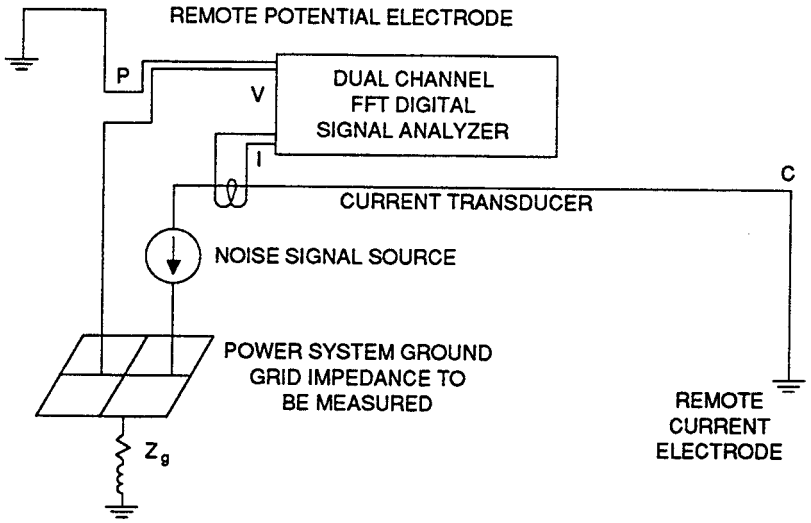

Figure 8-4—Dual-Channel Signal Analyzer Method of Measuring Impedance

8.3 Portable Power-Generator Source

The grounding system impedance may be measured with current levels of 10 to 100 A using a portable power generator with test current frequencies offset from the power-system frequency. Interference voltage from the power system can be avoided by using a test current frequency with at least 5 Hz difference from the system frequency, and by using measuring instruments of the selective-frequency type. A deviation of more than 10 Hz could introduce a significant error when shield wires and cable sheaths form an important part of the ground impedance. Or, if interference levels remain constant during the test period, the grounding-system impedance can be measured by the "beat frequency method" with a test-current frequency slightly offset (0.1 to 0.5 Hz) from the power-system frequency.

A portable power source can be an ac welding set, a truck-mounted recreational generator, or a portable 120 V ac generator carried by hand. Thus the power and current levels from about 1–50 kW and 10–100 A are feasible depending on the current-circuit impedance. The governor is adjusted to offset the test frequency from the power frequency. If the test results are thought to be sensitive to this frequency shift, measurements taken above and below the power frequency can be averaged.

At the higher test-current levels, the use of an out-of-service transmission line with phase conductors connected in parallel will simulate zero sequence current flow in the grounding system occurring during line-to-ground faults and will reduce current-circuit impedance. The remote current electrode may be a neighboring station grid (using ground switches closed on the test circuit) or a convenient transmission line tower. A spark gap or surge arrester should be provided across the generator in the event of lightning or system faults. Similarly, the frame of the generator and other instrumentation should be well bonded to the station grid.

For normal levels of interference, the portable power generator source with its lower current makes a continuous test practical since system regulation, hazardous potentials, and drying out of soil are not usually a problem. Continuous tests allow one detector to measure a large number of current splits and potentials.

Copyright © 1992 IEEE All Rights Reserved

Copyright The Institute of Electrical and Electronics Engineers, Inc.
Provided by IHS under license with IEEE
No reproduction or networking permitted without license from IHS Not for Resale

For a simple grounding system where measured current and potential magnitudes can be used to determine grounding impedance magnitudes, the beat-frequency method or a tunable voltmeter detector will suffice. The magnitude-phase nuller method (see 8.3.2) can be used to measure both the magnitude and phase angle quantities. However, in the more extensive grounding system with numerous measuring points, the dual-channel network analyzer, which automatically measures the phase angle between and the ratio of two quantities, is more flexible during the continuous test energization as it allows one channel to determine the ratio and phase angle of a large number of current splits and potentials compared with a reference input current.

8.3.1 The Beat-Frequency Method (See [B25] and [B37])

This method involves an asynchronous test current and consists of a separate power supply, usually a mobile ac generator (frequency 0.1–0.5 Hz above or below the power frequency), an out-of-service transmission line, and a series capacitor inserted in series with the current loop to reduce the impedance of the current circuit (see Fig 8-5). Due to the frequency difference between the injected current, I_s, and the interference current, I_i, caused by the network during normal operation, the beat-frequency maxima and minima will occur in the test line as well as in the measured potential. When the maxima and minima values (I_{max}, I_{min}, V_{max}, and V_{min}) are measured, the residual voltage and current, V_i and I_i, should also be measured, as a check, before and after injecting the test current. Then, calculate:

$$I_s = \frac{I_{max} + I_{min}}{2} \quad \text{for } I_s > I_i \tag{8}$$

$$V_s = \frac{V_{max} + V_{min}}{2} \quad \text{for } V_s > V_i \tag{9}$$

$$I_s = \frac{I_{max} - I_{min}}{2} \quad \text{for } I_s < I_i \tag{10}$$

$$V_s = \frac{V_{max} - V_{min}}{2} \quad \text{for } V_s < V_i \tag{11}$$

$$Z_g = \frac{V_s}{I_s} \tag{12}$$

Copyright © 1992 IEEE All Rights Reserved

Copyright The Institute of Electrical and Electronics Engineers, Inc.
Provided by IHS under license with IEEE
No reproduction or networking permitted without license from IHS Not for Resale

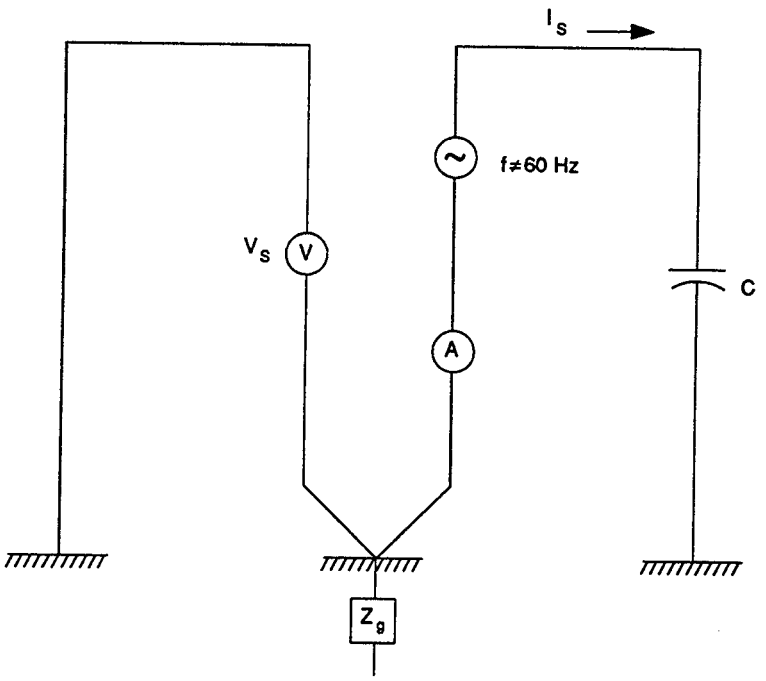

Figure 8-5—General Layout of the Beat-Frequency Method

8.3.2 Magnitude-Phase Nuller

This class of detector provides for separate nulling of magnitude and phase for measuring phasor impedances or current splits. As an example, the scheme shown in Fig 8-6 was configured, see [B9], for use with a welding generator source (67 Hz) where strong power-frequency noise was expected. With switch S in position 1, the oscilloscope positive (differential) input receives the test signal with the notch filter removing some power-frequency noise. The reference current signal from the CT is phase shifted and attenuated by the oscillator so as to null the test signal using the oscilloscope negative input. Through triggering of the oscilloscope by the line frequency, the noise represents a stationary waveform while the test signal provides a moving pattern that can be hulled with great sensitivity. Noise-free readings of the magnitude and phase are then made from the oscillator. With switch *S* in position 2, the procedure is repeated to measure the current reference signal. The ratio of the two results gives the test impedance with the amplitude and phase error in the notch filter cancelling.

Fig 8-7 shows a more simple alternative. A normal CT with shunt, R_s, provides a signal in phase with the test current. A split-core CT with an intentional air gap and high impedance burden provides a differential current signal leading by 90°. Calibrated potentiometers, P_r and P_x, are varied to bring about a null condition with the test signal, using the notch filter for additional noise reduction. The measured impedance is defined by the potentiometer settings as $P_r + jP_x$. The gapped CT is magnitude calibrated by separately measuring the voltage present across each potentiometer. In a similar manner, a variable mutual inductor and CT with secondary potentiometer may be used to null out the potential signal, which is superimposed on the 60 Hz plus harmonic interference voltages, see [5].

While these methods have good noise-rejection capability, nulling with two controls can be tedious in comparison with network analyzers.

Copyright © 1992 IEEE All Rights Reserved

Copyright The Institute of Electrical and Electronics Engineers, Inc.
Provided by IHS under license with IEEE
No reproduction or networking permitted without license from IHS Not for Resale

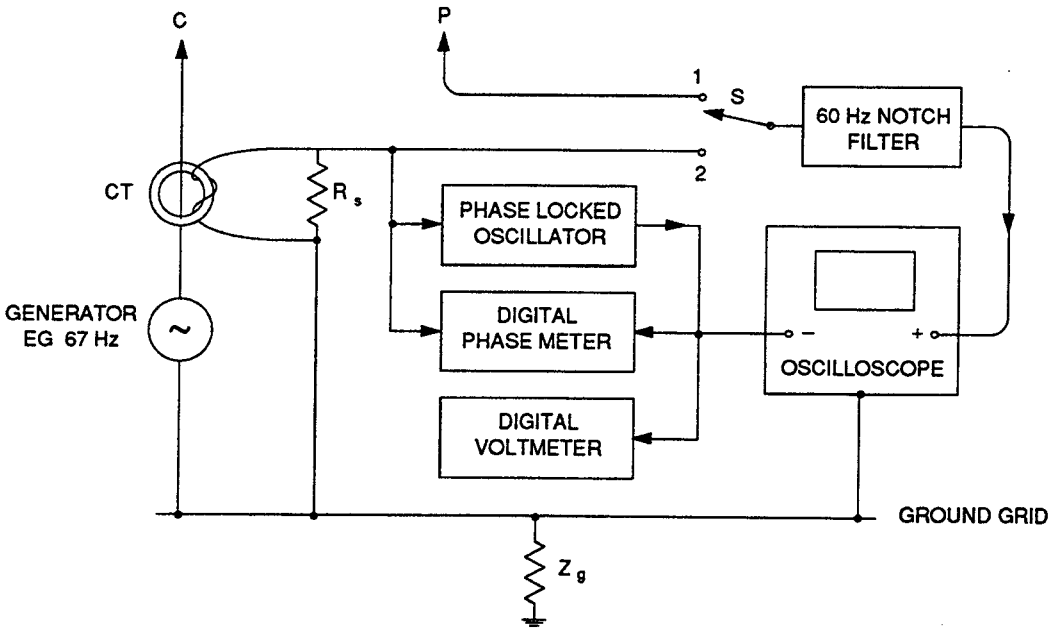

Figure 8-6—Magnitude-Phase Nuller Using Phase Locked Oscillator

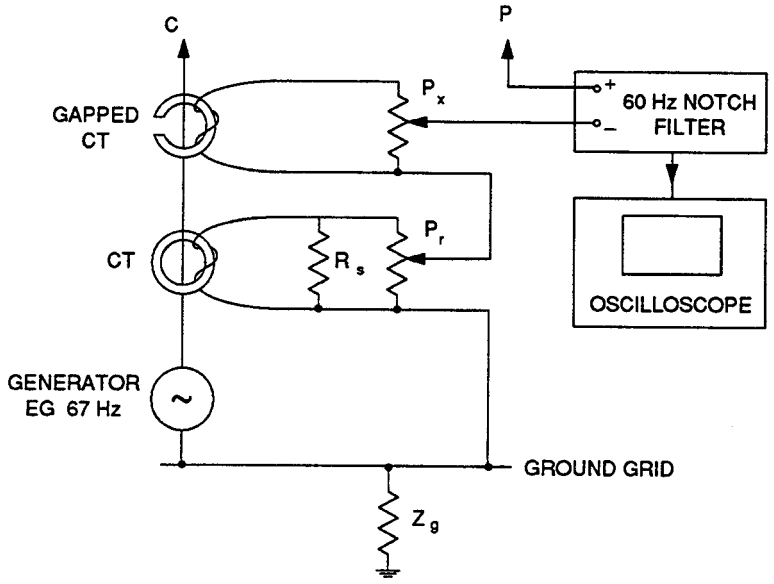

Figure 8-7—Magnitude-Phase Nuller Using Phase Differentiating CT

Copyright © 1992 IEEE All Rights Reserved

Copyright The Institute of Electrical and Electronics Engineers, Inc.
Provided by IHS under license with IEEE
No reproduction or networking permitted without license from IHS
Not for Resale

8.3.3 Dual-Channel Signal Analyzer

Grounding system multiple measurements can be made with a dual-channel network analyzer (DCNA), a portable generator (PG), and a step-up transformer (Tx) used to obtain the desired test current. The network analyzer, with an automatic averaging technique, calculates the ratio of the inputs to Channel i and Channel 2 and their phase angle difference. As shown in Fig 8-8, current transformers temporarily installed to measure current in each grounding branch have resistive shunts connected across their terminals. Shunt voltage drops, grid potentials, and cable conductor potentials are transmitted by shielded, twisted-pair cable to a central location (see 13.20). Then, each potential, in turn, can be compared with the output of the injection current CT.

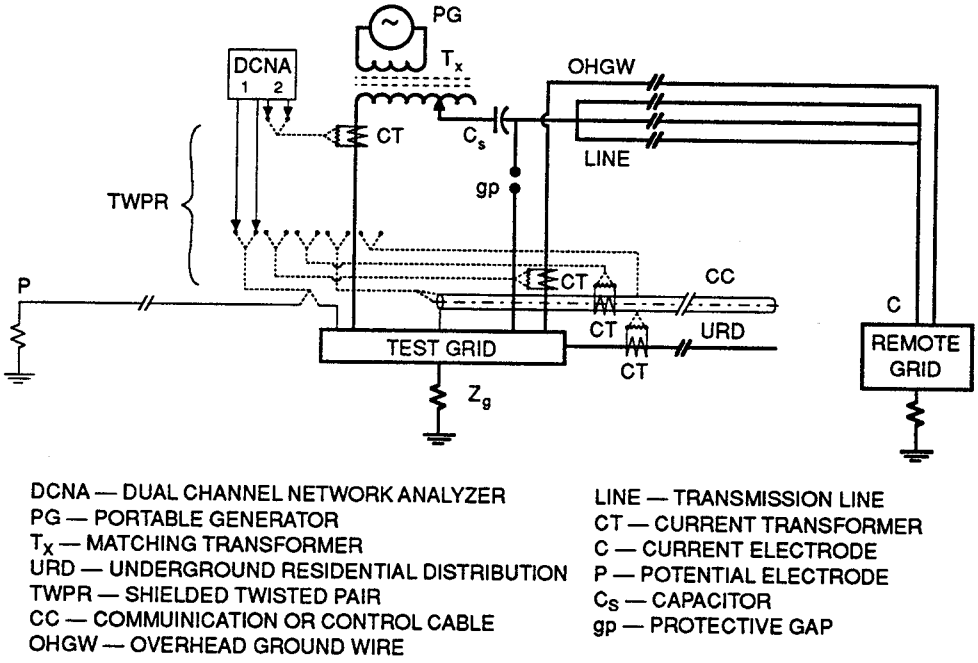

Figure 8-8—Grounding System Measurements With a Network Analyzer

A test current offset at 10 Hz or less from the power-system frequency may be injected into selected out-of-service lines while the normal power transmission is maintained on remaining lines. On the shorter lines (<10 km), in order to simulate the mutual impedance characteristics of a single-line-to-ground fault, only one phase conductor is used. The main objective is to determine the effective transfer impedance between a phase conductor and the communication and control cables with the beneficial effect of current flow in the grounding system. The latter is necessary to calculate the voltage stresses on these cables in the event of a power-system fault. On longer lines, in order to minimize injection circuit impedance, all three phases of the transmission line should be connected in parallel.

8.4 Power System Low-Voltage Source

The grounding system impedance may be measured with injected test currents taken from the power system low-voltage network, see [9], [B25], [B44], and [B40]. However, interference voltages present on the grounding conductors and induced on the test conductors will modify the measured currents and potentials. Measurement error can be reduced with test current magnitudes 50–100 A or higher, and fundamental and harmonic frequency errors can be minimized by the test-current reversal method and the interference compensation method (see 14.6).

Copyright © 1992 IEEE All Rights Reserved

Copyright The Institute of Electrical and Electronics Engineers, Inc.
Provided by IHS under license with IEEE
No reproduction or networking permitted without license from IHS
Not for Resale

8.4.1 Test-Current-Reversal Method (See [B13], [B25], and [B44])

The measurement of grounding impedance with test currents derived from a substation low-voltage source in the presence of an energized power system will add significant levels of fundamental and harmonic frequencies to the measured quantities. If the system conditions do not change during the test period, the interference will not change in magnitude, time, or phase relationships. Then, constant levels of background (fundamental and harmonic) frequencies present in the measured voltage and current can be cancelled out with the test-current-reversal method (see 14.6).

As shown in Fig 8-9, test equipment used for this method consists of the substation station-service source, an auxiliary adjustable matching transformer (Tx), an optional series capacitor (Cx) used to reduce current-circuit reactance, an out-of-service transmission line with either one phase used separately or three phases connected in parallel for impedance reduction, and an arrester or protective gap (gp) adjusted for 2–3 kV. The remote current electrode can be either the line termination grid or a low-resistance tower footing. Impedance magnitude and its resistance-reactance components can be calculated from measurements made with a wattmeter (W), ammeter (A), and voltmeter (V) of the electrodynamic type. A current transformer (CT) is used to reduce the test-current magnitude to within meter current coil ratings. These meters will give the true rms readings of waveforms containing harmonics. If the current in the wattmeter current coil has no distortion, only the fundamental frequency component of the potential waveform will produce active Power readings. Even if the current waveform has a slight (<5%) distortion, the active power produced by the harmonic content of the voltage will not significantly effect final results. Electrodynamic instruments of the moving-coil type are quite rugged; however, the input resistance of their potential circuits is low. If the resistance of the potential probe and the test lead, R_{probe}, is not at least 1/100 of the parallel voltmeter and wattmeter potential circuits, R_{meters}, then the voltmeter and wattmeter readings will be low and will require a correction multiplier: $(R_{meters} + R_{probe})/R_{meters}$. Meter potential circuit loading of the remote potential electrode circuit can be eliminated with a high-input-impedance, fixed-ratio amplifier (not shown in Fig 8-9) interposed between the meters and the test probe circuit. The optimum meter accuracy will be obtained if the amplified potentials are at least 50%, of coil ratings. Then the actual active power and voltage will be found by dividing the measured values by the amplification factor.

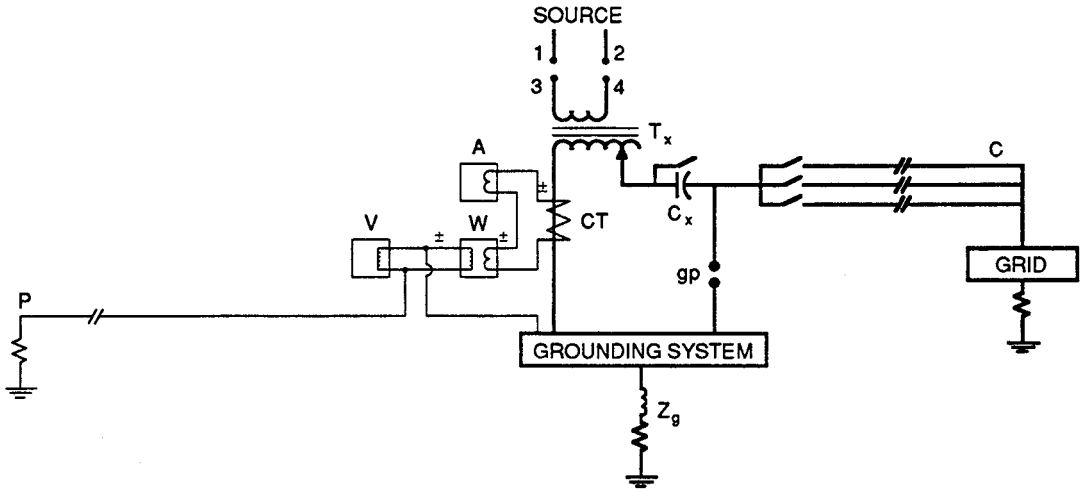

Figure 8-9—Substation Low-Voltage Source for Measuring Impedance

In the test-current-reversal method, referring to Fig 8-9, V_{sa}, I_{sa}, and P_{sa} are measured for connection 1 to 3 and 2 to 4; V_{sb}, I_{sb}, and P_{sb} are measured for connections 1 to 4 and 2 to 3; and, with 3 connected to 4 (1 and 2 open), V_i, I_i, and P_i are measured. If an initial current, I_i, exists in the injection line when the source of I_s is short-circuited (3 to 4), there will be a corresponding grid-rise voltage, V. To minimize errors caused by I_i and V_i, these quantities should be measured before and after the current injection test-current-reversal method. Then, I_s, V_s, and P_s can be calculated with the following equations:

Copyright © 1992 IEEE All Rights Reserved

Copyright The Institute of Electrical and Electronics Engineers, Inc.
Provided by IHS under license with IEEE
No reproduction or networking permitted without license from IHS
Not for Resale

$$I_s = \sqrt{\frac{I_{sa}^2 + I_{sb}^2}{2} - I_i^2} \quad (13)$$

$$V_s = \sqrt{\frac{V_{sa}^2 + V_{sb}^2}{2} - V_i^2} \quad (14)$$

$$P_s = \frac{P_{sa} + P_{sb}}{2} - P_i \quad (15)$$

and the impedance magnitude, resistance, reactance, and phase angle:

$$Z_g = \frac{V_s}{I_s} \quad (16)$$

$$R_g = \frac{P_s}{I_s^2} \quad (17)$$

$$X_g = \sqrt{Z_g^2 - R_g^2} \quad (18)$$

$$\cos\Phi_s = \frac{P_s}{V_s I_s} \quad (19)$$

where

Φ_s is the angle between V_s and I_s.

In conjunction with the test-current-reversal method, to improve measurement accuracy, it may be desirable to use the interference compensation method (see 8.4.2) to reduce any fundamental frequency interference voltage present in the potential-probe circuit. The advantages of using the power-system low-voltage source are:

1) Impedance is measured at power system frequency.
2) Equipment used for measurement is generally available in the utility.
3) Sufficient test current is used to overcome background voltages and any circuit nonlinearities such as connection resistances.

8.4.2 Interference Compensation Method (See [6], [B25], [B37], and, [B44])

The interference compensation method uses a power-frequency injection voltage to compensate the fundamental-frequency component of the residual voltage to zero with the current injection circuit open (see 13.8). After the compensation, the test current is injected by means of a current test circuit similar to that in Fig 8-10. Then, the selective-frequency voltmeter will measure the fundamental-frequency grid-voltage values. For the compensation, either a voltage source that is separately adjustable in magnitude and phase angle or two voltage sources shifted 90° apart that are independently adjustable maybe used. As an example of the latter, potentials may be obtained from a three-phase, four-wire source. The in-phase component can be obtained from *A* phase to *N*, and the 90° component from *B* to *C* phase (see Fig 8-10). The output impedance of the compensator should not exceed 0.5% of the potential measuring meter impedance.

If the out-of-service transmission line, used for current injection, parallels an energized line, the induced current alone could be used in conjunction with the interference compensation method to measure grounded-system impedance.

Copyright © 1992 IEEE All Rights Reserved

Copyright The Institute of Electrical and Electronics Engineers, Inc.
Provided by IHS under license with IEEE
No reproduction or networking permitted without license from IHS Not for Resale

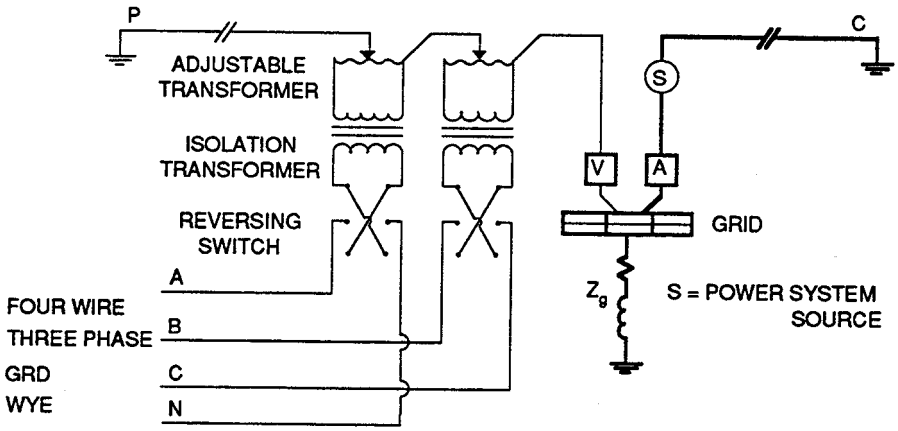

Figure 8-10—Potential Lead Interference Compensation Using a Three-Phase, Four-Wire Low-Voltage Source

9. Measurement of Low-Impedance Grounding Systems by Power System Staged Faults

9.1 Introduction

Grounding tests made under system conditions with full line-to-ground source voltage and high fault current provide a more exacting test of the grounding system. They make possible the determination of the grid potential rise, the fault current distribution in the grounding system, the phase angle difference between the voltage and current, the grid voltage profile, the voltages present on nearby buried metallic structures due to current flow through the earth, the induced voltages on paralleling utility facilities, and the effects of EMI generated by high-frequency current flow occurring at fault initiation and by system-frequency fault current flow (see 13.3 and 13.7). The staged fault test will not be required or desirable for every grounding grid. Normally, the current-injection test methods of Section 8. will be adequate, and only those grounding systems with special problems or marginal grid rise need be tested. Frequently, staged fault tests can be made jointly when system tests are conducted to determine circuit parameters, equipment performance, and protection characteristics. Fault testing of the grounding system will have a minimal effect on power-system operations, if performed during lightly loaded periods.

The projections of parameters to maximum expected fault current levels are necessary for grid safety, substation telephone service insulation requirements, interference voltages in paralleling control and communication circuits, and maximum effects on other utilities. Sub-station fault tests should be coordinated with interested telephone, pipeline, and customer engineering personnel.

Before undertaking measurement under power system conditions, it is recommended that safety practices of Section 4. be reviewed.

The following are additional precautions for power-system staged fault testing of grounding systems:

1) Cables used to measure the voltage rise must be considered live over their entire length at all times.
2) There should be no phone conversation during fault initiation.
3) Personnel should be warned not to establish any type of physical contact between two points at different potentials during tests.
4) A test sequence shall not be considered terminated until the opening of the test circuit is confirmed visually.

Copyright © 1992 IEEE All Rights Reserved

Copyright The Institute of Electrical and Electronics Engineers, Inc.
Provided by IHS under license with IEEE
No reproduction or networking permitted without license from IHS
Not for Resale

5) In the event that abnormally high voltages appear between the remote current or potential electrode and grid, protective measures should be provided that will safeguard personnel and protect test equipment from damage.
6) Subsection 13.20, which describes transient voltages that are present in energized substations, should be reviewed.

Attention should be directed not only to the effect of faults on transformers and breakers, as mentioned previously, but also to the effects of fault currents or voltages during faults on (or by) neutral grounding devices (if present), relaying, low-voltage arresters on nearby communication circuits, and high-voltage surge arresters on the unfaulted phase conductors as well as other system apparatus, especially if the normal circuit breaker clearing times are to be significantly exceeded.

9.2 Fault Configurations

There are several configurations possible for fault testing the grounding complex (see 13.7). Characteristics of a low-impedance grounding system are most accurately determined by having ample fault current. Maximum fault current and actual current distribution in the power system and grounding system will be achieved when faults are initiated with all substation sources connected normally. Current distribution in overhead lines and power cables may be predetermined from system fault studies, and will depend on fault location, source locations, and power-system network impedances. The grounding system, with its low impedance, has a negligible effect on fault magnitudes.

Current distribution in the grounding system during power system faults is determined by the self-impedance of each grounding branch, the mutual coupling between branches, and the mutual impedances between fault-current-carrying phase conductors and each extended grounding branch. As an example, if the overhead ground wire (OHGW) is connected to towers and a line-terminating grid, it will be necessary to determine what portion of the total fault current returns by shield wire and what portion flows to earth through the grounding system. Shield or screening factors of OHGWs are discussed in 6.3 and Section 10.

Although maximum fault magnitudes could be desirable, the reduced-fault-magnitude fault will generally give good results. Fault magnitudes can be reduced by initiating the fault to the substation grid at the end of a transmission line that is energized radially from a remote substation (see 10.4). Or, if the substation has a ground source (for example from a grounded wye-delta transformer bank), the fault can be initiated either at the remote end of a radially-fed line or by energizing the line with one phase solidly grounded at the remote substation. Or, a power transformer can be installed temporarily and energized from a lower voltage bus with its high side connected to the out-of-service transmission line used during the staged test, see [9], [B18], [B25], and [B44]. Calculations should be made of expected current through the transformer so as not to exceed its short-time thermal rating or its short-circuit winding strength.

9.3 Fault Initiation

Faults may be initiated by several methods:

1) Closing a power circuit breaker into a grounded phase
2) Closing the contacts of a fault-initiating switch (FIS) connected phase-to-ground
3) The fuse wire/arcing ground

One way the latter method may be initiated is by pulling a fuse wire, attached to an arrow propelled by a crossbow, triggered by a solenoid, through a grounded ring then through a ring mounted on an energized phase. The resulting arc path provides a low-resistance connection phase-to-ground.

If the staged tests require initiation at 0° on the voltage wave for maximum offset or at the voltage peak for zero offset of the current wave, the spring-operated FIS with its fast contact closing is the most consistent. Generally, power circuit breakers with other means of closing may not be repeatable within 2°, and those with closing resistors may

Copyright © 1992 IEEE All Rights Reserved

Copyright The Institute of Electrical and Electronics Engineers, Inc.
Provided by IHS under license with IEEE
No reproduction or networking permitted without license from IHS Not for Resale

nullify any attempt to get full offset. Because faults are initiated near or at voltage peak by the arcing ground method, the current wave could have little or no offset.

For accurate determination of phase angle and fault magnitudes, all measurements on voltage and current waveforms should be made after the main contacts are solidly closed and before fault interruption starts. To allow for contact makeup, arcing time at interruption, and any decrement reduction, it is desirable to have five or more cycles of fault current.

The grounding system impedance is most accurately determined with the zero-offset current wave or by using that portion of the fault duration in which the current offset has essentially become reduced to zero. The staged fault test generally has six basic timed sequences that are coordinated with protective relay adjustment, as follows:

1) The backup breaker is closed.
2) The recording device is started.
3) The fault initiating switch is closed.
4) The backup breaker is opened.
5) The fault initiating switch is opened.
6) The recording device is stopped.

If the fault initiating switch does not have adequate fault interrupting capability, it is advisable to interlock it so that a backup breaker must be opened before the fault initiating switch can be opened.

9.4 Current Measurements

In a grounding system, it is not possible to directly measure the current flowing from grid conductors to earth. Measurement of current flow from each source and to each of the external ground points connected to the grid is required. If a ground fault is initiated when grounded-wye shunt capacitors or reactors are connected, the resulting current unbalances will modify the current flow grid-to-earth. These currents are sources and will require measurement. If current magnitudes and phase angles are determined from oscillograms of each source and sink, earth current flow from the grid and its phase angle relative to the grid potential rise can be calculated (see Eq 20). Or, if each source and sink can be measured with CTs that have identical ratios and very small phase shift, then the symmetrical current flow, grid to earth, can be measured by a differential connection of the CTs. Refer to 10.2, 13.3, 13.7, 14.3, Fig 9-1, and [B4].

9.5 Potential Measurements

When grid voltages exceed several hundred volts, it is recommended that either potential transformers (PTs) or resistance voltage dividers (RVDs) be used. Locating the PT or RVD near the grid edge, for the temporarily installed insulated potential test lead, or at the line termination when an out-of-service transmission line is used to measure grid rise, will minimize personnel exposure to hazardous grid potentials. It is recommended that access to the potential transformation devices be restricted by installing temporary fencing or rope barriers.

Copyright © 1992 IEEE All Rights Reserved

Copyright The Institute of Electrical and Electronics Engineers, Inc.
Provided by IHS under license with IEEE
No reproduction or networking permitted without license from IHS Not for Resale

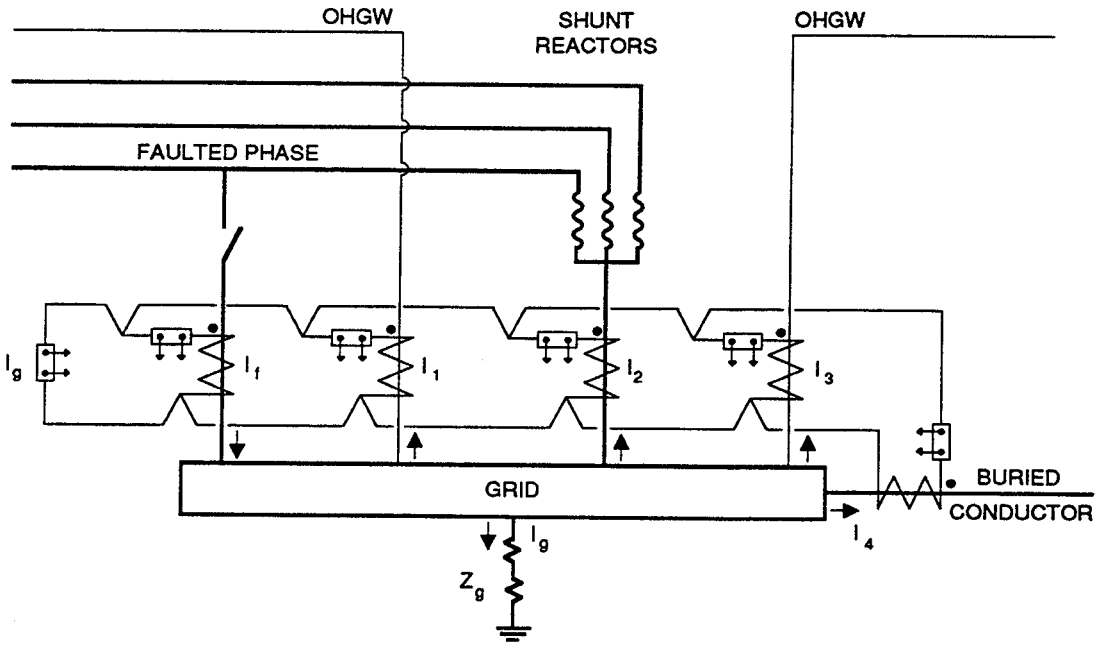

$$I_g = I_F - I_1 - I_2 - I_3 - I_4 \quad (20)$$

Figure 9-1—Current Distribution in the Grounding System During Fault Test

The voltage rise of the grounding system must be measured in relation to the voltage at a distant location (see 6.1, 6.2, and Section 7.). Potential measurements are effected by induced voltages resulting from the potential lead paralleling the current-carrying conductors, the measuring-device-input loading of the potential-test-probe resistance, PT saturation (if PTs are used to measure grid rise with offset), potential probe locations in proximity to a grounding complex electrode dispersing a portion of the total current to earth, inadequate distance from grounding system components by the potential probe, proximity of potential probe to the current electrode, oscillograph errors, and the inaccuracies of scaling oscillograms. PT saturation can be minimized by using PTs having a voltage rating at least twice that of the expected offset grid rise.

The potential probe resistance plus the primary potential lead impedance should not exceed 1% of the input impedance of the transformation device, in order that recorded voltages will not have significant phase angle errors or ratio changes. For example, if a PT, rated 1150 to 115 V (10 to 1), is used to measure the potential from the grid to the test probe, and if the probe and test lead have a combined impedance of 500 Ω, then the PT primary input impedance should not be less than 50 kΩ. On the secondary side, this converts to a 500 Ω input resistance to the oscillograph.

A 10 to 1 resistance divider with a 50 kΩ input and 5 kΩ output will require no less than 500 kΩ loading so as not to alter the divider ratio. The latter is achieved easily with amplifiers. At power frequencies, the capacitance of the cable between the divider output and the recording device will load the output of the resistance voltage divider and cause phase angle shift and ratio changes. For small angles, the phase shift in degrees can be approximated by

$$B = 36\frac{fR_1C_c}{r_d 10^8} \quad (21)$$

Copyright © 1992 IEEE All Rights Reserved

Copyright The Institute of Electrical and Electronics Engineers, Inc.
Provided by IHS under license with IEEE
No reproduction or networking permitted without license from IHS
Not for Resale

$$pur = 1 + 0.000152B^2 \quad (22)$$

where

f = power frequency, in Hz
R_1 = divider main resistor, in kΩ
R_2 = divider output resistor, in kΩ
C_c = cable capacitance, in pF
r_d = $(R_1 + R_2)/R_2$, divider ratio
pur = per unit ratio
$pur\ r_d$ = overall divider ratio

From Eq 19, the allowable total cable capacitance loading of the output of a 10-1, 50 kΩ input divider (R_1 = 45 kΩ and R_2 = 5 kΩ) for a 1° phase-angle change is 10 288 pF at 60 Hz or 12 347 pF at 50 Hz. With cable capacitance ranging between 98–164 pF/m, cable lengths would be between 63–105 m, 60 Hz and 75–126 m, 50 Hz. Also note that, from Eq , very little ratio change occurs for a 1° phase-angle shift. For a large grounding complex requiring long test-cable runs to the transformation device locations, lower probe resistance and lower divider resistance are desirable. If it isn't practical to reduce probe resistance sufficiently, and resistance dividers are used, it may be necessary to locate low-output-impedance amplifiers at each divider. So as not to exceed the divider's rating, (voltage)^2 · (energization duration) / (divider input resistance) should not exceed the short-time active power rating of the divider resistors.

9.6 Interference Reduction

Primary test leads that connect from a high-resistance potential electrode to a high-input-impedance measuring device, when located in the vicinity of an energized bus or transmission line, will require electrostatic shielding (i.e., a coaxial shield grounded at the measuring device). The potential lead to remote earth requires careful routing so as not to parallel the fault-current-carrying conductors (these are the current test conductor, the neutral conductors, and the transmission lines). A test lead, telephone circuit, or second transmission line, used to measure the grid potential rise, that parallel energized transmission lines could have fundamental frequency and higher harmonic-induced voltages added to its measurement. Harmonic distortion can be materially reduced by the combination of series resonant and parallel resonant passive filters tuned to the fundamental frequency. Although the preferred orientation of the potential lead is 90°, routing at an angle between 90° and 270° will be acceptable if the paralleling of energized transmission lines can be avoided. When a second transmission line is used as a potential lead to measure grid rise, it may be necessary to avoid paralleling energized lines at the remote substation by using a low-resistance tower footing several miles from the substation for the potential probe at remote earth.

When significant induced voltage of system frequency remains on the oscillograph potential trace before and after the application of the ground fault, a good estimate of the grounding grid potential rise (GPR) due to fault current flow can be made by subtracting this induced phasor voltage from the total phasor voltage measured during the fault. It is necessary to extrapolate the induced-voltage waveform to find its phase angle difference in relation to the fault current. The ground grid potential rise can be calculated from the following phasor equation:

$$V_g\angle\Phi_g = (V_s\angle\Phi_s) - (V_i\angle\Phi_i) \quad (23)$$

where

V_s and Φ_s are the voltage and phase angle measured during the fault.

V_i and Φ_i are the voltage and phase angle measured before or after the fault.

V_g and Φ_g are the grid rise and phase angle relative to the fault current.

Copyright © 1992 IEEE All Rights Reserved

Copyright The Institute of Electrical and Electronics Engineers, Inc.
Provided by IHS under license with IEEE
No reproduction or networking permitted without license from IHS Not for Resale

Measurements made with current and potential transformers require only a single-point safety ground at the oscillograph and the leads for each measured quantity that can be connected to isolated measuring elements. Potential measurements made between earth and grid with resistive voltage dividers and amplifiers located at various points on the grounding grid have the possibility of paralleling differing grid potentials by common connection to an amplifier chassis. Currents that flow between grid locations via measuring lead shields add unwanted voltage to the measured quantities. Cable routing that closely parallels the perimeter conductor will have very small electromagnetic interference (EMI) resulting from current induced voltage. Measurements made on the grid near the point of fault initiation will be exposed to large high-frequency transverse grid voltages. Because of the possibility of large transverse grid potentials and large longitudinally induced voltages, all secondary cable shielding should at least be grounded at both ends to neutralize grid transverse voltages (see 13.20). Shield grounding for the 60 Hz transverse grid voltage component is not effective. Shield grounds and instrument grounds should be kept separate.

9.7 Calibration

Accurate measurements require calibration of the measuring equipment. A sinusoidal source should be used to compare input and output quantities of the measuring equipment, both as to magnitude and phase angle, on a calibrated oscillograph. Where a utility does not have established measurement capabilities, the following methods will permit transformation-device calibrations to be made conveniently at the oscillograph location with actual burdens connected.

9.7.1 Current Measurements

The most accurate CT calibration is made with the actual CT secondary burden connected, and with a current magnitude approaching that expected during the fault test. Overall calibration of the current measuring circuit can be accomplished by taking a current loading transformer, standard CT, and portable oscillograph to the test CT location, and measuring the test CT primary and secondary current with the portable oscillograph. Or, CT calibration can be facilitated if the test CT is removed from its test location, the cable ends are short circuited, and its secondary is temporarily connected in series (observing similar polarities) with the cable at the oscillograph end. Thus, secondary loop burden of the test CT is maintained, and CT output and phase angle comparisons can easily be made with the standard CT on the calibrated test oscillograph (see Fig 9-2).

Overall measurement accuracy, primary to secondary, is of prime importance for accurate calculation of the impedance because neither the grounding system nor the grid impedance is directly measurable.

Currents through the grounding system or grid are found by subtracting the sum of numerous current vectors from the total current (see Eq 20). Errors that occur in the measurement of current magnitudes and phase angles can significantly modify the resultant calculated grid current and, thus, the calculated impedance. Of the two, the phase angle is most difficult to measure accurately. For example, an overall CT phase angle measurement error of 10° for numerous current measurements could cause significant errors in the calculated grid and grounding complex impedances.

Copyright © 1992 IEEE All Rights Reserved

Copyright The Institute of Electrical and Electronics Engineers, Inc.
Provided by IHS under license with IEEE
No reproduction or networking permitted without license from IHS Not for Resale

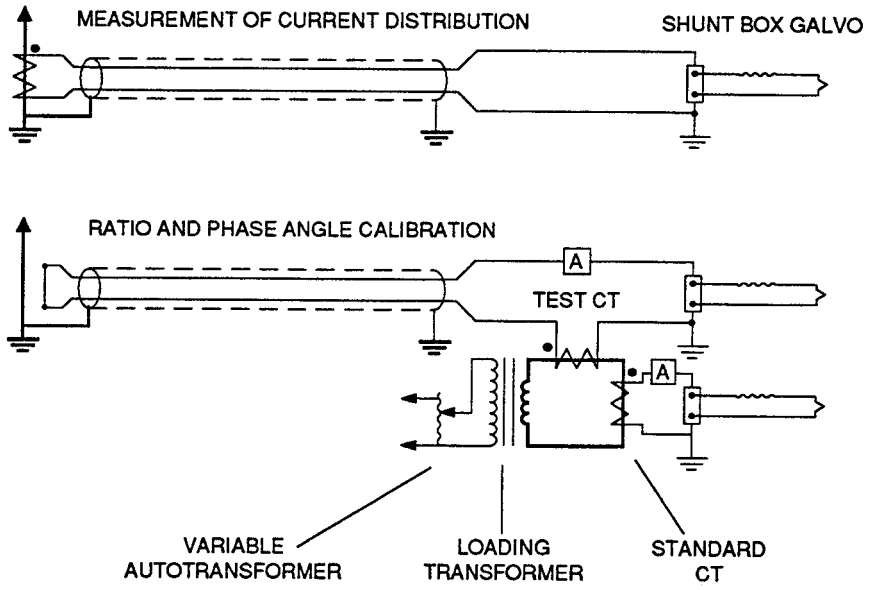

Figure 9-2—Ratio and Phase Angle Calibration for Current Transformers

9.7.2 Potential Measurements

With a test equipment arrangement similar to that used for the CT calibration, overall ratio and phase angle characteristics of the test PT can be determined with the standard PT, portable oscillograph, and voltage source at the test PT location. Or, if the PT is removed from its test location, its cable short is circuited, and the relocated test PT secondary is connected in series (observing similar polarity) with the cable at the oscillograph end, the calibration can be simulated under actual conditions occurring during the fault by energizing the test PT with a voltage near that expected, and through a resistor, r_p, equal in value to the potential probe circuit resistance. Both the phase angle shift and the voltage ratio can be determined by comparison with the standard PT output using the calibrated oscillograph (see Fig 9-3).

Similarly to calibrating the PT, the resistance divider can be calibrated in the test position. Or, the ratio and phase angle of the resistance voltage divider (and amplifier, if used) can be measured by removing the divider from its test position, leaving its cable open circuited, and reconnecting the divider output in parallel with its cable and the input to the amplifier at the oscillograph end. To simulate fault conditions, the divider is energized at the expected voltage through a resistance, r_p, equal to its potential probe circuit resistance. Then a direct comparison can be made between the standard PT output and the divider voltage for both ratio and phase angle using the calibrated oscillograph (see Fig 9.4).

Resistance voltage dividers are simple to build for single-frequency measurements; however, for high-resistance dividers, stray capacitance can affect both divider ratio and phase shift characteristics. Therefore, calibration of this class of device is essential.

After verification of transformation device ratio and phase angle accuracy using the above procedures, it is advisable to perform additional checks to ensure correct connection after reinstallation in their measuring positions.

For those utilities having measurement capabilities using fiber optics, EMI and the effects of cable resistance and cable capacitance on the transformation device ratio and phase angle will be eliminated (see 13.20). As before, overall calibration of the instrumentation package will be required.

Copyright © 1992 IEEE All Rights Reserved

Copyright The Institute of Electrical and Electronics Engineers, Inc.
Provided by IHS under license with IEEE
No reproduction or networking permitted without license from IHS
Not for Resale

Measurements made during staged fault tests of the grounding system can be used to determine the system's electrical characteristics and, by projection to maximum fault current, its GPR, the maximum current distribution in the complex, the grid's safety characteristics, the maximum interference voltages on paralleling utilities, the transverse potentials across buried conductor (or neutrals) routed external to the grid, the EMI on control cables, the potentials on nearby metallic structures, and, for towers connected to the grid, the near-tower potentials.

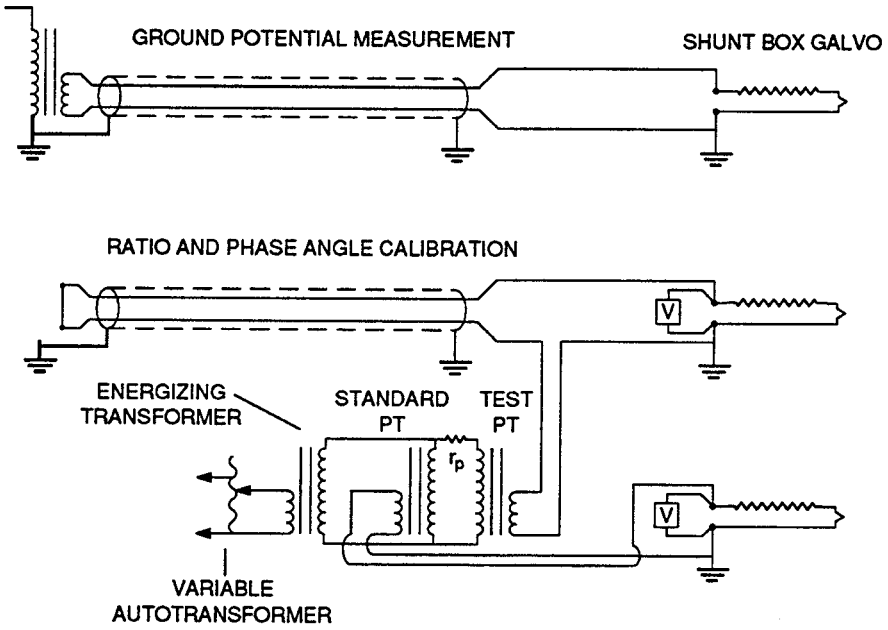

Figure 9-3—Ratio and Phase Angle Calibration for Potential Transformers

10. Current Distribution in Extended Grounding Systems

10.1 Introduction

The extended grounding system of the station may include connections to auxiliary grids, overhead ground wires, HV cable sheaths and pipes, distribution system neutrals, distribution cable sheaths and bonds, communication cable sheaths, municipal water lines, gas lines, cooling water pipes into lakes, streams, or cooling towers, penstocks in hydro pumped storage, fences, and railway tracks. Current split measurements in these conductors may be useful for

1) Determining the actual grid current by subtraction. This allows calculating the isolated grid resistance for comparison with design calculations.
2) Evaluating which is the most efficient grounding connection. For example, in urban areas, distribution neutrals are very effective, typically reducing the interconnected impedance to 10% of the grid resistance. Models for the distribution neutrals can also be validated using the measured splits.
3) Determining the shielding factor for overhead ground wires and cables. The higher split in the circuit with injected or fault test current, compared to the other circuits, is due to shielding.
4) Calculating the exposure of communication cables before they are installed.

Copyright © 1992 IEEE All Rights Reserved

Copyright The Institute of Electrical and Electronics Engineers, Inc.
Provided by IHS under license with IEEE
No reproduction or networking permitted without license from IHS
Not for Resale

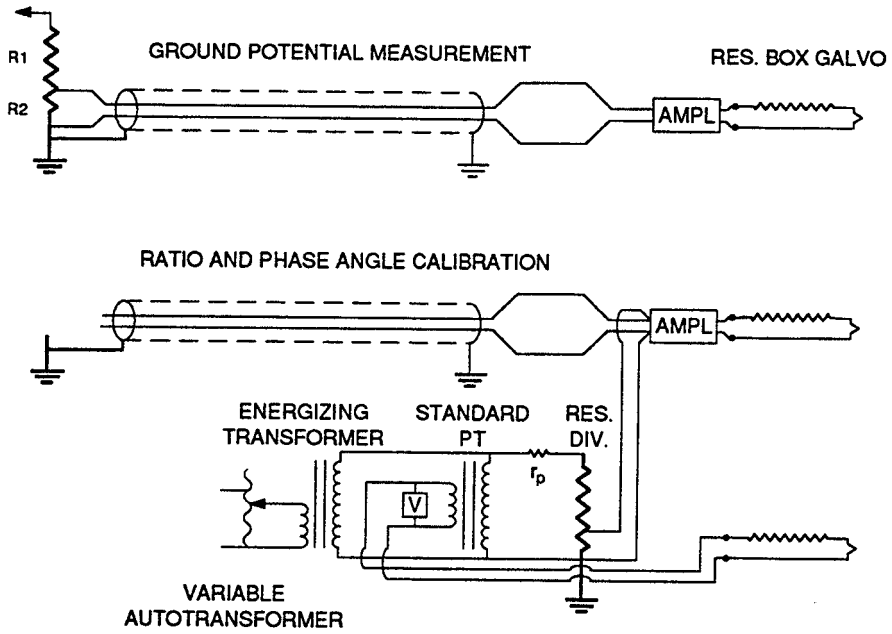

Figure 9.4 —Ratio and Phase Angle Calibration for Resistance Voltage Dividers

5) Checking the integrity of the grid and its connections. Corroded conductors or loose connectors will affect the current distribution with greater sensitivity than the global grid impedance.

10.2 Test Considerations

Current splits may be measured serially in time, for the test method of Section 8., using one clamp-on current transformer (CT). The method of Section 9. may require several CTs, depending on the number of staged faults. Both methods have the following test considerations in common:

1) Since the phase angles can vary significantly between different conductors, provisions should be made for resolving the current split as a vector. This implies the use of a second reference CT on the injected current and a signal connection between the test and reference point.
2) The CT burden can be either local with transmission of the voltage signal over a thin twisted pair, or it can be at the main test center with transmission of the current signal. For the latter, low-resistance cables are probably needed to control the total burden, depending on the distance. The first method may be more prone to interference, especially if the secondary shunt is too small. Too large a burden resistance will effect the measurement accuracy of the phase angle more than the magnitude. A calibration with test and reference current transformers around the same conductor will check for this possibility.
3) For very small currents, an effect in the current transformer magnetization characteristic can alter the calibration. It can be checked by comparing the same measured current splits with different test-current levels.
4) Power-frequency interference is likely to be a greater problem than with potential measurements, which are not as sensitive to localized circulating currents or induction.
5) Some grounding conductors, such as pipes, high voltage or single-phase low voltage cables, or fences, may be too large for use of split-core current transformers. One solution is to build a large-windowed current transformer, using laminated metal sheets, and assemble it around the conductor. Without special design, the accuracy of this CT will be seriously effected by offset currents if used during the staged fault method, see [B7], [B11], and [B43]. Inductive-current pickups, see 13.17, are another possibility.

Copyright © 1992 IEEE All Rights Reserved

Copyright The Institute of Electrical and Electronics Engineers, Inc.
Provided by IHS under license with IEEE
No reproduction or networking permitted without license from IHS
Not for Resale

6) Distribution cables are particularly difficult to measure because of their large number and the lack of access to sheath-bonding leads within energized metal clad compartments. Placing the CT around a single-phase, cross-bonded cable will include measuring the core current (possibly several hundred amperes). Placing the CT around the sheath-bonding lead still includes residual current due to less-than-perfect cross bonding. Ideally, the CT should encircle all three phase conductors or all three sheath-bonding leads. However, for thermal cooling, the phases are usually well spaced. Another possibility is to measure the current in bonding leads between metal clad switchgear and the station grid.
7) The grid current split is found by subtracting the other measured current split from the total injected current. This calculation is poorly conditioned for small grids with extensive interconnections, as in urban areas. Thus, the required measurement accuracy for currents may be greater than for potentials. At the same time, higher interference levels can make this even harder. (14.2 discusses how interference effects accuracy).

If the current-injection method of Section 8. is used, there are several advantages to selecting a dual-channel signal analyzer, as described in 8.2.2 or 8.3.3, for the measuring instrument:

1) For the large number of current-split measurements needed, resolving the phase using sum and difference voltmeter readings would be tedious.
2) The rejection of interference when measuring phase angle should be superior for dual-channel analyzers.
3) Changes in test level or frequency over a lengthy test period are unimportant because each measurement is automatically scaled by the reference channel.

If the staged fault method of Section 9. is used, there are some additional test considerations:

1) If several current transformers with the same ratio are used at one time, it may be convenient to electrically subtract some current splits from the total fault current (see Fig 9-1). This could give a more accurate reading of the split in the grid, which cannot be directly measured.
2) As above, the current flow can be measured by wound CTs, “doughnut” (toroidal) CTs, split core CTs, and, for the measurement of the total current with full offset, a coaxial resistive shunt (see 13.15 and 13.16). The CTs already installed on some substation equipment can be used to measure current flow. In particular, the neutral or phase CT of a power transformer and those of circuit breakers are easy to use. However, overall calibration, primary to secondary, of the current circuit for CTs located in power transformers is not practical. To measure the current in neutrals, grid ties, or ground wires connected to the substation grid, split-core CTs can be installed on the various conductors.
3) For a large grounding complex requiring long cable runs between the CT secondary and the instrumentation, the CT secondary burden can become critical. The cable impedance is largely resistive. Therefore, to maintain the prescribed CT ratio and phase-angle accuracy, the loop resistance can be reduced by paralleling the conductors. By installing the test equipment as close as possible to the center of operation of the substation, the outputs of the CTs associated with the various pieces of equipment stay within easy reach.
4) If a CT secondary circuit loop resistance of approximately 0.6 Ω is to be maintained, a cable with two #12 AWG conductors will suffice to carry the various currents to the current switches on the test bench. Depending on the length of such cables, it may be necessary to calibrate the measuring equipment overall with the whole test loop in place. Also, it may prove useful to shorten cable runs by installing a second test bench as close as possible to the CT, and then synchronizing all oscillographs with a common reference trace.
5) Fault currents with dc offset can be expected to produce nonlinear changes in CT ratio and phase angle. Accurate measurement of fault current magnitude and phase angle require either a zero offset symmetrical current, a CT with a large cross-section core (that will not saturate), a special CT with a series of very small insulated gaps in the core (to reduce the saturation effects of dc offset), or a current duration long enough for the dc offset to have attenuated, see [B7], [B11],and [B43]. It is not possible to calibrate the CT circuit with a loading transformer for the overall errors introduced by offset fault currents.

Copyright © 1992 IEEE All Rights Reserved
--`,,`-`-`,,`,,`,`,,`---
Copyright The Institute of Electrical and Electronics Engineers, Inc.
Provided by IHS under license with IEEE
No reproduction or networking permitted without license from IHS
Not for Resale

10.3 Analysis of Current Distribution in a Grounding System (See [B25] and [B44])

Fig 10-1 is an example of a grounding system that, in addition to the grid, has six pathways for current flow to earth. In this example, both overhead ground wires (OHGW) are grounded at each tower and to each end grid. Some utilities isolate their OHGWs from each grid, sectionize their OHGWs, and connect each section to the mid-section tower. These OHGWs do not contribute to the grounding-system impedance. Counterpoise (CP) conductors are used to reduce grounding resistance at towers with high footing resistance. They may extend several towers from the grid or, in high-resistivity earth, may be continuous between grids. Overhead neutrals (OHNs) are connected to the grid, to a ground rod at each pole mounted transformer location, and to water pipes at service drops. Underground residential distribution (URD) cable neutrals should be grounded at the grid, at each pad-mounted transformer location, continuously when the outer neutral wires are not insulated, and they should be grounded to water pipes at service entries.

Auxiliary grid tie conductors (GTC) may be used to provide additional grounding in high-resistivity areas or shielding for control cables.

Current distribution in the various branches of the above example can be measured during test-current-injection methods described in Section 8., or the staged-fault methods described in Section 9. For all but the most rudimentary measurements, the current phase angle as well as magnitude should be recorded. Due to different X to R ratios and varying coupling to the injected current, the phase angles may range over more than 90°. Thus, calculations based on magnitudes only would be meaningless. To determine phase, the measured and reference currents need to be brought to one location, using, for example, a twisted-pair cable or a radio link, and compared in a phase angle responding instrument (e.g., a sine wave or FFT network analyzer, see 13.5). Digital phase meters are not useful if the measured signal contains power-frequency noise. Further details appear in 13.6. A ratio-type network analyzer, with the reference channel fed by a second current transformer connected to measure the injected test current, also makes the measurements insensitive to random changes in test current level or frequency.

A number of measurements can be made serially over time. Two teams in radio contact, one to move the current transformer and one to operate the network analyzer, allow efficient testing. A calibration is made by measuring the injected test current at the beginning of the test procedure.

Copyright © 1992 IEEE All Rights Reserved

Copyright The Institute of Electrical and Electronics Engineers, Inc.
Provided by IHS under license with IEEE
No reproduction or networking permitted without license from IHS Not for Resale

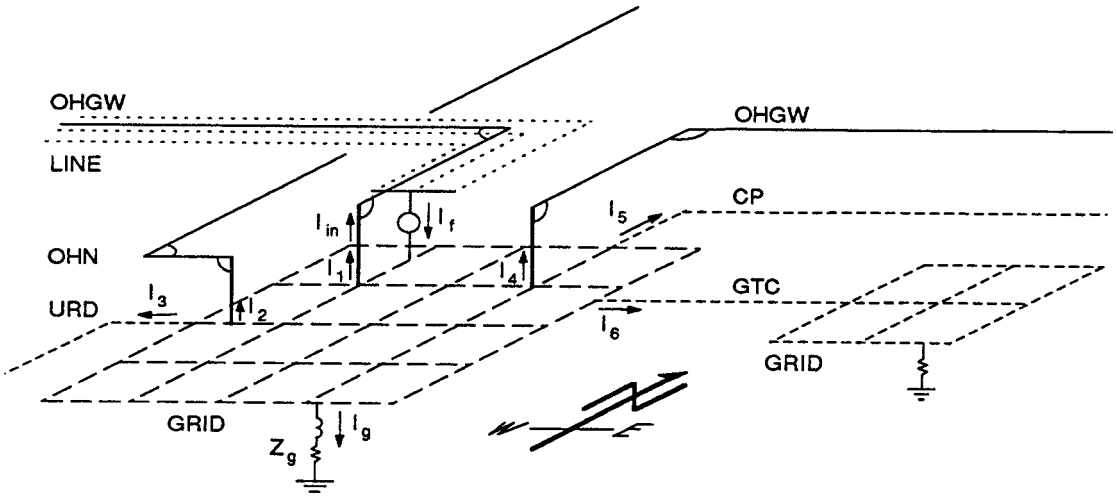

OHN = OVERHEAD NEUTRAL
OHGW = OVERHEAD GROUND WIRE
LINE = OUT-OF-SERVICE TRANSMISSION LINE
CP = COUNTERPOISE
URD = UNDERGROUND RESIDENTIAL DISTRIBUTION
GTC = AUXILIARY GRID TIE CONDUCTORS

Figure 10-1—Schematic Diagram of a Grounding System

Once measurements have been made for one injection path, the results need some interpretation for fault current entering on several circuits. In the Fig 10-1 example, the injection current, I_f, is equal to the sum of the grounding-system currents:

$$I_f = I_g + (I_{in} + I_1) + I_2 + I_3 + I_4 + I_5 + I_6 \quad (24)$$

where

$(I_{in} + I_1)$ is the measured current in OHGW-1.
I_{in} is the induced current returning through the OHGW.
I_1 is the earth return current through tower footings.

Because of the distributed nature of a grid, it is not possible to measure grid current flow to earth directly. Grid current is calculated from the injection current, measured branch currents, and Eq 24:

$$I_g = I_f - (I_{in} + I_1) - I_2 - I_3 - I_4 - I_5 - I_6 \quad (25)$$

During test measurements, current distribution in the grounding system is determined by the self impedance to earth of each branch, the mutual coupling between branches, and the mutual coupling between the current-injecting test conductors and extended grounding conductors. Although mutual coupling between current-carrying conductors oriented at other than 90° will have some effect on current flow, the mutual impedance between paralleling conductors will make the largest change in conductor currents.

When the current injection conductor(s) parallels a grounding system conductor, mutual coupling will induce a voltage that increases current flow in the conductor. In the above example, if the West transmission line is used for current

Copyright © 1992 IEEE All Rights Reserved

Copyright The Institute of Electrical and Electronics Engineers, Inc.
Provided by IHS under license with IEEE
No reproduction or networking permitted without license from IHS
Not for Resale

injection, the mutual coupling, $Z_{o(L,GW)}$, between the injection current, I_f, in the phase conductors and the OHGW will induce a voltage, $-I_f Z_{o(L,GW)}$, in the OHGW.

The induced-current component, I_{in}, flowing in the OHGW is determined by

$$I_{in} = I_f \cdot \left[\frac{Z_{0(L,GW)}}{Z_{0(GW)}} \right] = \mu I_f \tag{26}$$

$$\mu = \frac{Z_{o(L,GW)}}{Z_{o(GW)}} \tag{27}$$

where

The current direction taken for I_{in} is opposite to I_f.

The mutual impedance, $Z_{o(L,GW)}$, between phase conductors and the ground wire(s), and the self impedance, $Z_{o(GW)}$, of the ground wire(s), both in ohms per length of shield wire, may be determined from formulas and programs in [7], [B16], [B42], [B45], and Appendix A.

and the current, I_1, flowing through the grounding impedance of the OHGW is,

$$I_1 = (I_1 + I_{in}) - \mu I_f \tag{28}$$

The current flow through the grounding system impedance is

$$I_{gs} = I_g + I_1 + I_2 + I_3 + I_4 + I_5 + I_6 \tag{29}$$

Or, from Eqs 24, 26, and 29

$$I_{gs} = I_f - I_{in} = (1 - \mu) I_f = r I_f \tag{30}$$

where the shielding factor

$$r = 1 - \mu \tag{31}$$

and the induced current in the OHGW is

$$I_{in} = (1 - r) I_f \tag{32}$$

The grounding system impedance can be determined from the measured grounding potential rise, V_g, measured fault current, I_f, and the calculated shielding factor, r:

$$Z_{gs} = \frac{V_g}{I_{gs}} = \frac{V_g}{r I_f} \tag{33}$$

the grid impedance:

$$Z_g = \frac{V_g}{I_g} \tag{34}$$

Copyright © 1992 IEEE All Rights Reserved

Copyright The Institute of Electrical and Electronics Engineers, Inc.
Provided by IHS under license with IEEE
No reproduction or networking permitted without license from IHS Not for Resale

and the branch impedances:

$$Z_k = \frac{V_g}{I_k} \tag{35}$$

where

k = 1,2,3, and 6

The OHGW and CP conductors connect to the grids and towers. Consequently, their individual impedances cannot be determined with these measurements (see Appendix D). Their parallel impedance is

$$Z_{45} = \frac{V_g}{(I_4 + I_5)} \tag{36}$$

If the resistance of each tower footing is available, the input grounding impedance, Z_{CH}, of the OHGW-tower footing chain (Z_1 in the above example) can be calculated with the earth return self impedance of the OHGW and the following formula:

$$Z_{CH} = 0.5[Z_{o(GW)} + \sqrt{Z_{o(GW)}(4R_T + Z_{o(GW)})}] \tag{37}$$

or, approximately

$$Z_{CH} = 0.5Z_{o(GW)} + \sqrt{R_T Z_{o(GW)}} \tag{38}$$

where

R_T is the average tower footing resistance.

$Z_{o\,(GW)}$ is the OHGW earth return self impedance of an average span. See [7], [B16], [B30], [B42], [B45], and Eqs A7 or A8.

The input impedance of a distribution line neutral grounded at service taps can be calculated with Eq and the ground-rod resistance as R_T.

The idealized OHGW-tower footing chain consists of equally spaced towers, towers with equal footing resistances, OHGWs connected to each tower and grid, tower footings not located in the potential field of its grids or adjacent towers, and a very long OHGW.

The estimated impedance with Eq 37 could vary from measured impedance of the OHGW because of considerable variations from average of span lengths and footing resistance in the section of the line near to the substation. Or, if OHGWs are not bonded to each tower, the voltage that develops across the substation grounding during the injection test may not be high enough to break down corroded mechanical connections at each OHGW tower support (see Section 5.).

Line towers that are located in the potential field of the grid (less than one grid diagonal from grid center) will have reduced current flow to earth through their footings and, consequently, a reduction in their contribution to chain impedance. Measured impedance would be higher than that estimated by Eq 37.

If, for the grounding-impedance measurement, the OHGW is opened at the substation dead-end towers, induced current flow through a tower adjacent to the grid will modify the grid potential rise and introduce significant error in measured grid impedance, see [B40].

Copyright © 1992 IEEE All Rights Reserved

Copyright The Institute of Electrical and Electronics Engineers, Inc.
Provided by IHS under license with IEEE
No reproduction or networking permitted without license from IHS Not for Resale

When the test conductor used to measure the ground grid potential rise is routed at an angle other than 90° to the current-injection line, the measured potential, V_s, will differ from the true grounding potential, V_g, by both the mutual coupling from current, I_f, in the line conductor(s) and the current, I_{in}, in the overhead ground wires to the potential conductor, *P*.

Then,

$$V_g = V_s - I_f Z_{m(L,P)} + I_{in} Z_{m(GW,P)} \quad (39)$$

See Section 7. for a discussion of earth-return mutual effects, their correction, and formulas for calculating mutual impedances, $Z_{m(L,P)}$ and $Z_{m(GW,P)}$. In the angled cases, and where parallel separation is much larger than the vertical distance between the OHGW and line conductors, $Z_{m(L,P)} = Z_{m(GW,P)}$ and Eq 39 will reduce to

$$V_g = V_s - r I_f Z_{m(L,P)}$$

Current distribution in the grounding systems becomes more complex when the transmission line conductors (not shown) leaving the grid to the East in Fig 10-1 are used for current injection. Mutual coupling between the test-current-carrying phase conductors and OHGW, CP, and GTC conductors, Fig 10-1, will induce voltages that increase current flow in these branches. Mutually coupled voltages between OHGW and CP, OHGW and GTC, and CP and GTC will, to a lesser extent, reduce current flow in these branches.

As in the preceding discussion, induced currents are related to the test current flowing in the line conductors. In general, the grounding system could be represented by a matrix that relates current, the self impedance of each branch, and the mutual coupling between all the grounding branches. EPRI EL-904 [7] includes formulas and programs for calculating currents in passive ground conductors resulting from current flow in line conductors (see [7], pages 3–6 to 3–12 and A-10 to A-18).

Where the overhead-ground-wire shielding factor varies between transmission lines, a single measurement using one test line cannot duplicate actual fault conditions. An extreme example is for urban stations that are fed by cables and overhead lines. If possible, the different circuits should be tested separately, see [B9]. A practical alternative is to test using the circuit with highest fault infeed, taking into account the shielding, and model the remainder.

Overhead ground wires that are not connected to each grid and every tower will have a shielding factor of unity. In Eqs 30, 31, 32, and 33, $r = 1$ and $\mu = 0$.

10.4 Induced Current in the Angled Overhead Ground Wire

The induced current in an OHGW resulting from current flow in its line conductors or conductors that parallel the OHGW can be calculated with Eqs 26, 31, and 32. These equations are not applicable to the OHGW that is at an angle with a current carrying conductor of another line. This subsection extends this concept by determining the induced current that results from the induced voltage in each span of the angled OHGW.

Fig 10-2 is an example of an OHGW that is at angle, θ, with a conductor carrying current, I_f. Moreover, the net inducing current in the injection line and its OHGW is rI_f (where *r* is the shielding factor of Eqs 27 and 31). The induced voltage in each span, resulting from the mutual coupling between rI_f and each span, decreases in magnitude with the increasing distance to each following span. In Fig 10-2, induced voltages are designated as V_{IN1}, V_{IN2}, V_{IN3} and V_{INk} for spans 1, 2, 3 and *k*, respectively.

Mutual coupling to each angled span can be calculated with Eq A3 This formula gives the total mutual impedance between conductors starting from a common vertical axis (Refer to Fig A-3). The method of calculating mutual impedance between angled conductors that do not start from a common vertical axis is included in Eq A6. This

Copyright © 1992 IEEE All Rights Reserved

--`,,`-`-`,,`,,`,`,,`---

Copyright The Institute of Electrical and Electronics Engineers, Inc.
Provided by IHS under license with IEEE
No reproduction or networking permitted without license from IHS
Not for Resale

procedure is followed with each subsequent span until their calculated mutual coupling becomes negligible. Then, induced voltages of each span in Fig 10-2 are:

$$V_{IN1} = rI_f Z_{o(L,\,spl)} \tag{40}$$

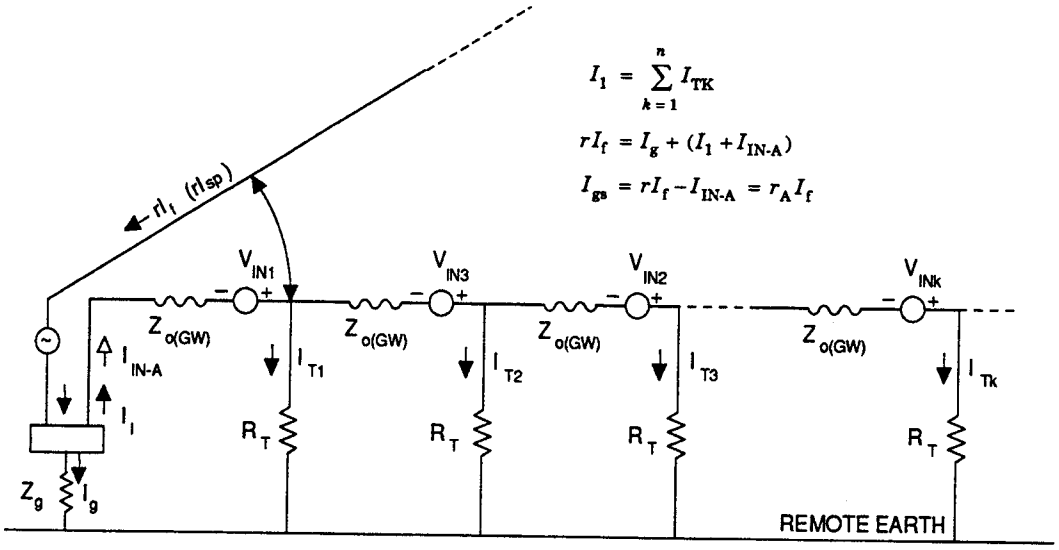

I_f = INJECTION CURRENT, IN A
r = SHIELDING FACTOR FOR INJECTION LINE
rI_f = NET CURRENT INTO GROUNDING SYSTEM, IN A
I_{gs} = CURRENT THROUGH GROUNDING SYSTEM, IN A
I_1 = EARTH RETURN CURRENT THROUGH TOWER FOOTINGS, IN A
$I_{IN\text{-}A}$ = INDUCED CURRENT IN ANGLED OHGW, IN A
r_A = SHIELDING FACTOR FOR ANGLED OHGW
θ = ANGLE BETWEEN I_f AND OGHW, IN DEGREES

Figure 10-2—Induced Current in the Angle Overhead Ground Wire

$$V_{IN2} = rI_f Z_{o(L,\,sp2)} \tag{41}$$

$$V_{IN3} = rI_f Z_{o(L,\,sp3)} \tag{42}$$

-- = ------

$$V_{INk} = rI_f Z_{o(L,\,spk)} \tag{43}$$

where

$Z_{o(L,spl)}$, $Z_{o(L,sp2)}$, $Z_{o(L,sp3)}$, and $Z_{o(L,spk)}$ are the calculated mutual impedance between I_f and the 1st, 2nd, 3rd, and kth span of the angled OHGW, respectively (Eqs A3 and A6).

The induced current in the OHGW is related to the induced span voltages, the span mutual impedance, and the chain input impedance by the following summation formula:

Copyright © 1992 IEEE All Rights Reserved

Copyright The Institute of Electrical and Electronics Engineers, Inc.
Provided by IHS under license with IEEE
No reproduction or networking permitted without license from IHS
Not for Resale

$$I_{\text{IN-A}} = \sum_{k=1}^{n} \left[(1-S)^{k-1} \frac{V_{\text{INK}}}{Z_{\text{CH}}} \right] \tag{44}$$

or, from Eq 43,

$$I_{\text{IN-A}} = rI_{\text{f}} \sum_{k=1}^{n} \left[(1-S)^{k-1} \frac{Z_{\text{o(L, spk)}}}{Z_{\text{CH}}} \right] = \mu_{\text{A}} rI_{\text{f}} \tag{45}$$

$$\mu_{\text{A}} = \sum_{k=1}^{n} \left[(1-S)^{k-1} \frac{Z_{\text{o(L, spk)}}}{Z_{\text{CH}}} \right] \tag{46}$$

and, the shielding factor for the angled OHGW is

$$r_{\text{A}} = 1 - \mu_{\text{A}} \tag{47}$$

The induced current in the angled OHGW is

$$I_{\text{IN-A}} = \mu_{\text{A}} rI_{\text{f}} = (1 - r_{\text{A}}) rI_{\text{f}} \tag{48}$$

where

S = $Z_{\text{o(GW)}}/Z_{\text{CH}}$
$Z_{\text{o(GW)}}$ = earth return impedance of one span, in Ω (Eq A7)
Z_{CH} = chain input impedance, in Ω (Eq 37)
$Z_{\text{o(L,spk)}}$ = mutual coupling from rI_{f} to the kth span, in Ω, (Eqs A3 and A6)
n = number of spans with significant mutual coupling
k = 1,2,3,...,n
r = shielding factor of the injection line OHGW (Eqs 27 and 31)
I_{f} = injection current, in A

As in the parallel case of Eqs 26, 31, and 32, the induced current of Eq 48 does not return through tower footing resistance and thus does not contribute to ground grid potential rise.

When $0° < \theta < 90°$, the span mutual will be positive and the induced-current direction in the OHGW will be the same as the earth return current. When $90° < \theta \leq 180°$, the span mutual is negative, and the induced-current direction is opposite to the earth return current. For this latter case, the maximum induced current occurs for $\theta = 180°$, and Eqs A1 and A5 can be used by inserting negative distances for either P or C.

In the parallel case ($\theta = 0°$), all of the span mutuals are equal and the induced current of Eqs 45, 46, 47, and 48 converts to those of Eqs 26, 27, 31, and 32.

The induced current in the angled OHGW (Eqs 46 and 48) will depend on rI_{f}, the OHGW orientation angle with I_{f}, the mutual coupling to each span, and the earth return impedance of the OHGW, Z_{CH}, which in turn depends on tower-footing resistance and the OHGW span's self impedance.

Fig 10-3 is an example of span mutual impedances calculated with Eqs A3 and A6 for earth resistivities 1 to 100 000 Ω-m when an OHGW is oriented 30° with a 20 km long conductor. After the first span, the mutual impedance decreases for each subsequent span. The mutual impedance components are larger for the higher earth resistivities.

The tower-footing resistance has a marked effect on the induced current calculated by Eqs 46 and 48. In the above example, if the earth resistivity is 1000 Ω-m, I_{f} = 1000 A, and rI_{f} = 425 A ∠-11 °, the induced current in the angled OHGW is 21 A ∠11.5° for 100 Ω tower footings, and increases to 44 A ∠1.6° for R_{T} = 10 Ω. The 21 A induced

Copyright © 1992 IEEE All Rights Reserved

Copyright The Institute of Electrical and Electronics Engineers, Inc.
Provided by IHS under license with IEEE
No reproduction or networking permitted without license from IHS
Not for Resale

current compares with the 36 A ∠–44° earth current in the angled OHGW. And, the total earth-return current ($I_{gs} = r_A r I_f$) through a 0.5 Ω grid and the two OHGWs is 405 A ∠-12° for R_T = 100 Ω and 382 A ∠ –12.8° for R_T = 10 Ω. Thus, in the measurement of grounding-system impedance the induced current in the angled OHGWs becomes a factor.

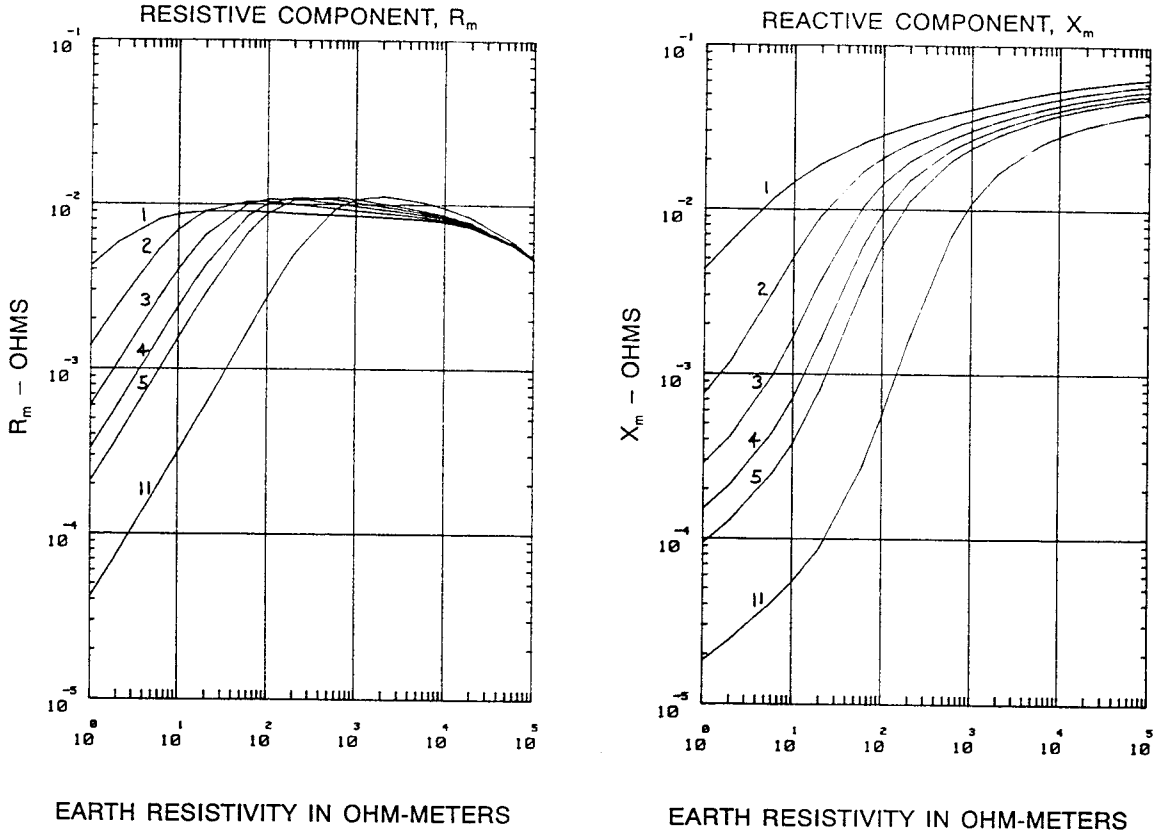

f = 60 Hz
C = 20 km
h_c = 13.7 m
SPAN = 322 m
h_p = 22 m
SPAN # = 1, 2, 3, 4, 5, and 11

CONDUCTOR = 89.6 mm ALUMINUM/52.3 mm STEEL
STRAND DIAMETER = 15.3 mm
r_C = 0.306 Ω/km (0.493 Ω-mile) at 25 °C

Figure 10-3—Mutual Coupling to the Spans of an Angled Overhead Ground Wire

The angled OHGW routed in a direction opposite to the injection current line (θ = 180°) will have both the current returning to earth over the OHGW to the tower footings and an induced current, determined by Eqs 46 and 48, that flows between the terminating grids via the OHGW. This current will be much smaller than the induced current in the OHGW of the injection current line. However, depending on the earth resistivity and the OHGW self impedance, the induced current in the 180°-OHGW will be 4 to 18% of its earth-return current. Because the mutually coupled voltage in the OHGW is in opposition, the induced current flows in a direction opposite to the earth-return current, and the measured current in the OHGW is less than the earth-return current.

The mutual impedance between a 20 km long current injection line and each span of an OHGW oriented at 180° to the line is plotted in Fig 10-4 against earth resistivities of 1 to 100 000 Ω-m.

Copyright © 1992 IEEE All Rights Reserved

Copyright The Institute of Electrical and Electronics Engineers, Inc.
Provided by IHS under license with IEEE
No reproduction or networking permitted without license from IHS
Not for Resale

As in the 30° angled example, the reactive component, X_M, increases significantly for increasing earth resistivities, and the mutual impedance of each more distant span is less than the previous. The mutual resistive component of each span increases with earth resistivity, reaches a maximum, and then decreases towards the same magnitude at 100 000 Ω-m.

The grounding system shown in Fig 10-4 consists of a grid, which is kept, in this example, at 0.5 Ω for all values of earth resistivity, and two overhead ground wires routed in opposite directions. Summarized in the following table is the current distribution in the grounding system resulting from 1000 A flowing in one line to the grid for three values of earth resistivity, i.e., 10, 100, and 1000 Ω-m.

Current Location	10Ω-m R_T=1Ω	100Ω-m R_T=10Ω	1000Ω-m R_T=10Ω
Grounding System, in A	563 ∠-6°	496 ∠-6.8°	431 ∠-10.7°
Grid, I_g, in A	200 ∠ 22.5°	318 ∠8.4°	369 ∠-4.5°
Inject-OHGW Earth Return, I_1, in A	199 ∠-19.9°	103 ∠-30.5°	38 ∠-42.8°
Inject-OHGW Induced, I_{IN1}, in A	452 ∠ 7.4°	519 ∠6.6°	589 ∠7.8°
180° OHGW Earth Return, I_4, in A	199 ∠ -19.9°	103 ∠-30.5°	38 ∠-42.8°
180° OHGW Induced, I_{IN4}, in A	8.5 ∠ -5.4°	8.3 ∠0.6°	6.8 ∠2.6°
180° Induced/Earth Return, I_4/I_{IN4}	4.3%	8.1%	17.9%

The input impedances, Z_{CH}, of the OHGWs increase with increases in earth resistivity and tower footing resistance; and, as a consequence, their earth-return current decreases. The induced current in the OHGW that parallels the injection current line increases from 452 A for 10 Ω-m earth to 589 A for 1000 Ω-m earth. The induced current in the 180° OHGW does not change significantly for the three resistivities and three tower-footing resistances. However, its magnitude is a significant part of the measured current in the OHGW. For the three earth-resistivity values, the induced current in the 180° OHGW is 1.9%, 1.6%, and 1.2% of the induced current of the parallel case.

If, for the 1000 Ω-m earth, special means are used to reduce tower footings to 10 Ω, the induced current in the 180° OHGW would increase to 17A, and its earth-return current would increase to 90 A. Thus, the tower-footing resistance has a large effect on the induced and earth-return currents in the 180° OHGW. This is not so in the parallel case in which the induced current remains unchanged.

10.5 Current Distribution During a Staged Fault Test (See [B44])

In Fig 10-5, a portion of a power system is shown that includes three substations with grounded-wye sources (Substation-1, Substation-2, and Substation-X), a switching station (Substation-Y) and a high-voltage line (HVL X-4) with a ground current source. Overhead ground wires are grounded at each tower and each substation termination. Staged fault tests are made of Substation-X's grounding, which models the grounding system shown in Fig 10-1.

For the staged fault test, the high-voltage line, HVL X-Y, is energized to the open disconnect switch, SW-1, and the line-to-ground fault to Substation-X grounding is initiated by closing SW-2. Fault current, I_{f1}, flows to grid; induced current, $(1 - r_{x\text{-}y})\, I_{f1}$, returns to source via the overhead ground wire of HVL X-Y; and current, $r_{x\text{-}y} I_{f1}$, returns through the impedance of the grounding branches.

When unbalanced loads are connected to the grounded-wye sources at either Substation-1, Substation-2, or Substation-X, residual load current flowing in the grounding system will modify the current distributions shown in Figs 10-5 and 10-6. In the case of the fault tests at Substation-X, with significant load unbalance, it will be necessary to measure each grounded-wye neutral current in Substation-X and add them vectorially to the fault currents, I_{f1} or I_{f2}, to determine the total current flow to the grid.

Copyright © 1992 IEEE All Rights Reserved

Copyright The Institute of Electrical and Electronics Engineers, Inc.
Provided by IHS under license with IEEE
No reproduction or networking permitted without license from IHS Not for Resale

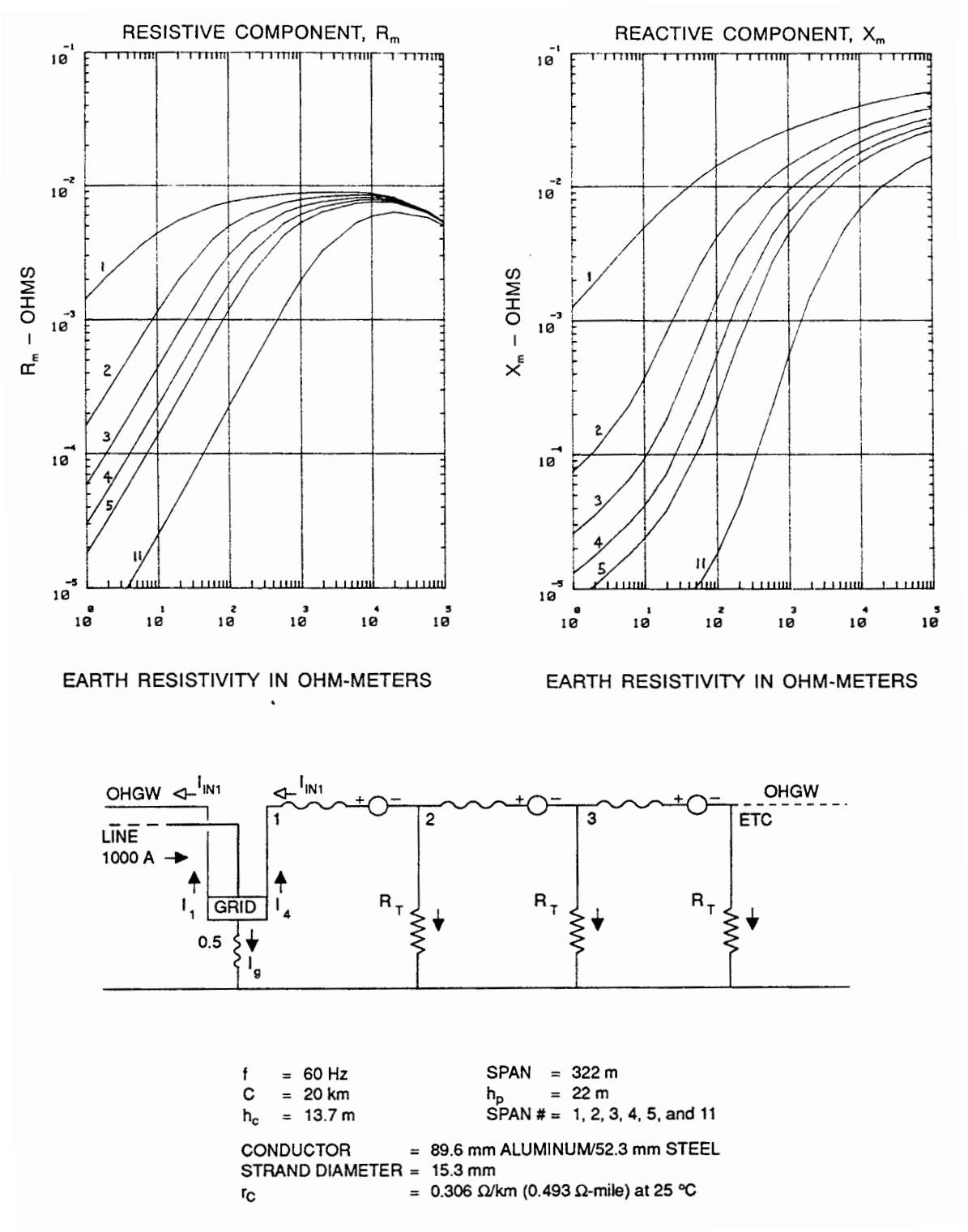

Figure 10-4—Mutual Impedance Between the Line and a 180° Oriented OHGW

Copyright © 1992 IEEE All Rights Reserved

Copyright The Institute of Electrical and Electronics Engineers, Inc.
Provided by IHS under license with IEEE
No reproduction or networking permitted without license from IHS
Not for Resale

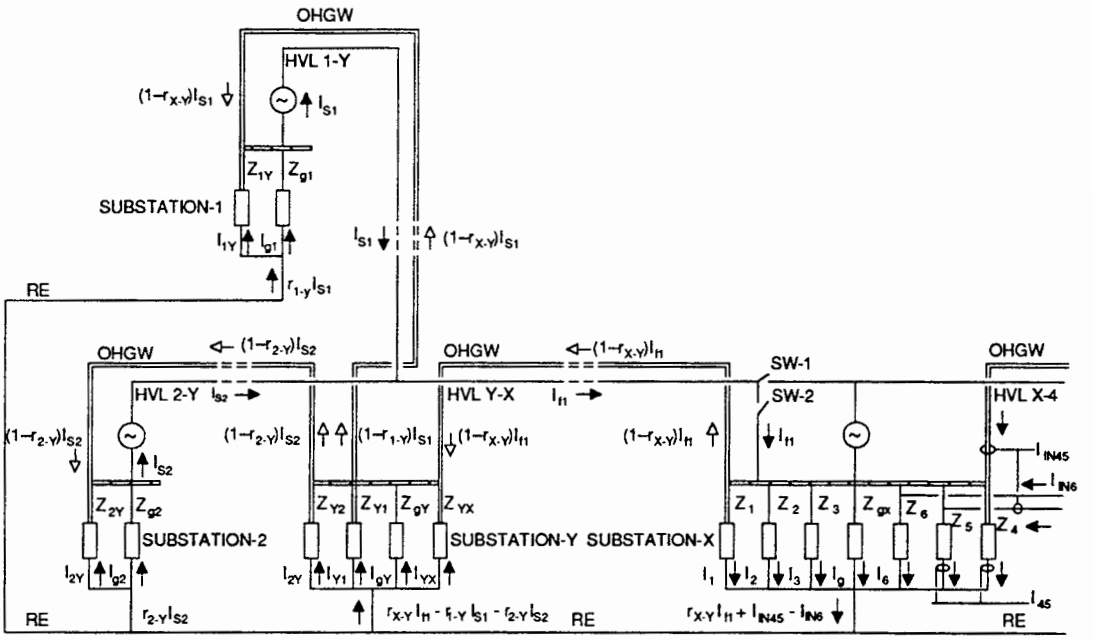

HVL = HIGH VOLTAGE LINE
RE = REMOTE EARTH
OHGW = OVERHEAD GROUND WIRE
= GROUNDED WYE SOURCE

BRANCH GROUNDING IMPEDANCES OF SUBSTATION-X:

Z_1	=	OHGW, HVL X-Y	Z_4	=	OHGW, HVL X-4
Z_2	=	OHN	Z_5	=	CP
Z_3	=	URD	Z_6	=	GTC
Z_{gX}	=	GRID SUB-X			

BRANCH GROUNDING IMPEDANCES OF SUBSTATION-Y:

Z_{Y1}	=	OHGW, HVL Y-1	Z_{YX}	=	OHGW, HVL X-Y
Z_{Y2}	=	OHGW, HVL Y-2	Z_{gY}	=	GRID, SUB-Y

BRANCH GROUNDING IMPEDANCES OF SUBSTATION-1:

Z_{1Y}	=	OHGW, HVL 1-Y	Z_{g1}	=	GRID, SUB-1

BRANCH GROUNDING IMPEDANCES OF SUBSTATION-2:

Z_{2Y}	=	OHGW, HVL 2-Y	Z_{g2}	=	GRID, SUB-2

Figure 10-5—Staged Fault Test of Substation-X

The following current relationships are deduced from the current distribution shown in Fig 10-5.

The fault current, I_{f1}, consists of contributions from Substation-1 and Substation-2:

$$I_{f1} = I_{s1} + I_{s2} \tag{49}$$

The grid current, I_{gx}, can be determined with Eq 25 and measured currents I_{f1}, I_{xy}, I_2, I_3, I_{X4}, I_{CP} and I_{GTC}:

$$I_{gx} = I_{fl} - I_{xy} - I_2 - I_3 - I_{X4} - I_{CP} - I_{GTC} \tag{50}$$

Copyright © 1992 IEEE All Rights Reserved

Copyright The Institute of Electrical and Electronics Engineers, Inc.
Provided by IHS under license with IEEE
No reproduction or networking permitted without license from IHS
Not for Resale

Then the grid impedance can be calculated with the measured grounding potential rise, V_{g1}:

$$Z_{gx} = \frac{V_{g1}}{I_{gx}} \tag{51}$$

As indicated in Eq 24, the earth return current through the tower footings, and an induced current, flow in the OHGW (X-Y). For the fault test its designation is I_{XY}.

$$I_{xy} = I_1 + I_{IN1} = I_1 + (1 - r_{x-y})I_{fl} \tag{52}$$

The shielding factor, $r_{x\text{-}y}$, can be calculated with Eqs 27 and 31, and Eq 52 solved for the earth-return current of the OHGW (X-Y):

$$I_1 = 1_{xy} - (1 - r_{x-y})I_{fl} \tag{53}$$

The earth return impedance, Z_1, of OHGW (X-Y) is

$$Z_1 = \frac{V_{g1}}{I_1} \tag{54}$$

As in Eq 35, the impedance of the OHN is $Z_2 = V_{g1}/I_2$, and the impedance of the URD neutral is $Z_3 = V_{g1}/I_3$. If necessary, of the OHN could be calculated with Eq , and the impedance of an uninsulated URD neutral can be calculated with the formulas of Appendix C.

The current in the OHGW (X–4) and CP consists of an earth-return current and a small induced current. Moreover, the OHGW is in parallel with the CP, which acts as a lossy transmission line. The total current through the parallel circuit equals its component currents,

$$I_{X4} + I_{CP} = I_{45} - I_{IN45} \tag{55}$$

The earth-return impedance, Z_{45}, of the CP-OHGW grounding can be calculated with Eqs D1, D2, D3, and D4. Then, the earth return current is

$$I_{45} = \frac{V_{g1}}{Z_{45}} \tag{56}$$

and, from Eq 55, the induced current in the CP-OHGW combination is

$$I_{IN45} = \frac{V_{g1}}{Z_{45}} - I_{X4} - I_{CP} \tag{57}$$

The measured current in the GTC will consist of an earth-return current and a small induced current:

$$I_{GTC} = I_6 - I_{INS6} \tag{58}$$

The earth-return impedance, Z_6, of the GTC can be calculated with Eq C2, and the earth-return current component is determined with the measured grounding potential, V_{g1}, where

$$I_6 = \frac{V_{g1}}{Z_6} \tag{59}$$

Copyright © 1992 IEEE All Rights Reserved

Copyright The Institute of Electrical and Electronics Engineers, Inc.
Provided by IHS under license with IEEE
No reproduction or networking permitted without license from IHS Not for Resale

Eq 58 can be solved for the induced current as

$$I_{IN6} = \frac{V_{g1}}{Z_6} - I_{GTC} \tag{60}$$

The current I_{gs} through the grounding system is related to an equivalent shield factor, r_{E1}, and current, I_{f1}, in Line X-Y.

$$I_{gs} = I_{fl} - I_{IN1} + I_{IN45} + I_{IN6} = r_{E1} I_{fl} \tag{61}$$

Or, on the basis of Eq 30, an equivalent shielding factor can be determined for current I_{f1} in Line X-Y.

$$r_{E1} = 1 - \frac{I_{IN1} - I_{IN45} - I_{IN6}}{I_{fl}} \tag{62}$$

As in Eq 33, the grounding system impedance is

$$Z_{gs} = \frac{V_{g1}}{r_{E1} I_{fl}} \tag{63}$$

As presented in 10.4, the induced current in OHGW (X-4), CP, and GTC from current I_{f1} depends on the earth resistivities and becomes more significant in comparison with the induced current, I_{IN1}, in OHGW (X-Y) for earth resistivities above 1000 Ω-m. In this 180° example, when earth resistivities are lower, the grounding system impedance could be approximated with small error by

$$Z_{gs} = \frac{V_{g1}}{r_{x-y} I_{fl}} \tag{64}$$

However, when θ < 90°, Eq 63 would be required.

The second staged-fault test of Substation-X is made with HVL X-4 energized to the open disconnect switch SW-3, and the line-to-ground fault to Substation-X grounding is initiated by closing switch SW-4. The fault current, I_{f2}, flows to the grid; the induced currents, I_{IN45} and I_{IN6}, return to the source via the OHGW (X-4), CP, and GTC respectively; and the current, $I_{f2} - I_{IN45} - I_{IN6}$, returns through the impedance of the grounding branches. The current distributions in the grounding system of Substation-X are shown in Fig 10-6. Note that the induced currents in the OHGW, CP, and GTC are due to mutual coupling from I_{f2} and the resulting currents in OHGW (X-4), CP, and GTC. The induced voltage in each branch due to HVL X-4 can be calculated with I_{f2} and Eq A1. The induced voltages between branches cannot be determined, however, without knowing the branch currents.

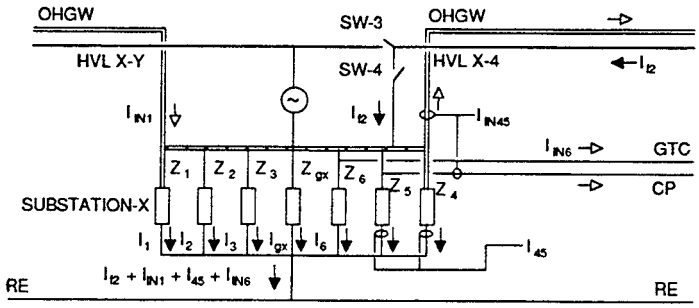

Figure 10-6—Staged Fault Test Number Two

Copyright © 1992 IEEE All Rights Reserved

Copyright The Institute of Electrical and Electronics Engineers, Inc.
Provided by IHS under license with IEEE
No reproduction or networking permitted without license from IHS
Not for Resale

The magnitude and phase angle of the following quantities are measured during the test:

Grid potential rise	V_{g2}
Fault current	I_{f2}
OHGW (X-Y) current	I_{xy}
OHN current	I_2
URD current	I_3
OHGW (X-4) current	I_{x4}
CP current	I_{CP}
GTC current	I_{GTC}

The current flow through the grounding impedance of the grid is

$$I_{gx} = I_{f2} - I_{xy} - I_2 - I_3 - I_{x4} - I_{CP} - I_{GTC} \tag{65}$$

and the grid impedance, Z_g, may be calculated with the measured grounding potential rise, V_{g2}:

$$Z_{gx} = \frac{V_{g2}}{I_{gx}} \tag{66}$$

The current, I_{xy}, in OHGW (X-Y) includes an earth-return current, I_1, and an induced current, I_{IN1}:

$$I_{xy} = I_1 - I_{IN1} \tag{67}$$

The induced current, I_{IN1}, can be calculated with Eqs 46 and 48. The earth-return current can be determined either by solving Eq 67 or from the grounding potential rise and earth-return impedance evaluated in test #1 by Eq 54.

$$I_1 = I_{xy} + I_{IN1} = \frac{V_{g1}}{Z_1} \tag{68}$$

The earth-return impedance, Z_1, for OHGW (X-Y) can be determined with Eq 37 or with Eq 68 and the measured grounding potential rise, V_{g2}.

$$Z_1 = \frac{V_{g2}}{I_1} \tag{69}$$

The earth-return current, I_{45}, and the induced current, I_{IN45}, through the parallel combination of CP and OHGW (X-4), are equal to the sum of the current, I_{X4}, measured in OHGW (X-4) and the current, I_{CP}, measured in the CP.

$$I_{45} + I_{IN45} = I_{x4} + I_{CP} \tag{70}$$

The impedance, Z_{45}, of the CP-OHGW (X-4) combination can be calculated with Eqs D1, D2, D3, and D4. Then, the earth-return current, I_{45}, can be determined with the measured grounding potential rise, V_{g2}.

Copyright © 1992 IEEE All Rights Reserved

Copyright The Institute of Electrical and Electronics Engineers, Inc.
Provided by IHS under license with IEEE
No reproduction or networking permitted without license from IHS Not for Resale

$$I_{45} = \frac{V_{g2}}{Z_{45}} \tag{71}$$

The induced current, I_{IN45}, in the CP-OHGW (X-4) combination can be determined by solving

$$I_{IN45} = I_{x4} + I_{CP} - \frac{V_{g2}}{Z_{45}} \tag{72}$$

The current, I_{GTC}, includes an earth-return component, I_6, and an induced component, I_{IN6}.

$$I_{GTC} = I_6 + I_{IN6} \tag{73}$$

The earth-return impedance, Z_6, of the GTC can be calculated with Eq C2; and the current, I_6, can be calculated with Eq 74 and the known grounding potential rise, V_{g2}.

$$I_6 = \frac{V_{g2}}{Z_6} \tag{74}$$

The induced current, I_{IN6}, in the GTC can be calculated by solving Eq 75.

$$I_{IN6} = I_{GTC} - \frac{V_{g2}}{Z_6} \tag{75}$$

The current, I_{gs}, through the impedance, Z_{gs}, of the Substation-X grounding system can be calculated from Eq 76.

$$I_{gs} = I_{f2} - I_{IN45} - I_{IN6} + I_{IN1} \tag{76}$$

Or, on the basis of Eq 30, an equivalent shielding factor, r_{E4}, can be calculated for fault current in Line X-4.

$$r_{E4} I_{f2} = I_{f2} - I_{IN45} - I_{IN6} + I_{IN1} \tag{77}$$

$$r_{E4} = 1 - \frac{I_{IN45} + I_{IN6} - I_{IN1}}{I_{f2}}$$

And, as in Eq 33, the grounding-system impedance, Z_{gs}, may be evaluated by

$$Z_{gs} = \frac{V_{g2}}{r_{E2} I_{f2}} \tag{78}$$

This result should be compared with results obtained with Eq 63.

During a single line-to-ground in-station fault with Substation-X normal, zero sequence currents will flow over the phase conductors of Line X-Y and Line X-4 from their grounded-wye sources. With the equivalent shielding factors, r_{E1} and r_{E2}, the grid potential rise can be calculated from system fault studies that supply fault current in each line. For the bus-to-ground fault in Substation-X, I_{f1} is the vector summation of zero sequence current in the phase conductors of Line X-Y, While I_{f2} is the summation of zero sequence currents in the phase conductors of Line X-4. The grid potential rise then is

$$V_g = (r_{E1} I_{f1} + r_{E2} I_{f2}) Z_{gs} \tag{79}$$

Copyright © 1992 IEEE All Rights Reserved

Copyright The Institute of Electrical and Electronics Engineers, Inc.
Provided by IHS under license with IEEE
No reproduction or networking permitted without license from IHS
Not for Resale

In the staged-fault examples, the induced current, I_{IN45}, resulting from the fault current, I_{f1}, was due to a negative induced voltage in the CP-OHGW (X-4) combination; and the induced current, I_{IN1}, resulting from the fault current, I_{f2}, was due to a negative induced voltage in the OHGW (X-Y).

These induced currents were determined with Eqs and using a negative mutual impedance for each span.

However, if the routing of Line X-Y and Line X-4 is similar to that of Fig 10-1, I_{f1} will also induce a positive voltage in the first span of CP-OHGW (X-4) running from the station dead-end tower to the first corner structure for test #1; and I_{f2} will induce a positive voltage in the first span of OHGW (X-Y) for test #2. All other induced span voltages are negative.

As a consequence, when the positive mutual impedance is used for the first span and negative mutuals for the other spans, the net induced current calculated with Eqs 46 and 48 would be smaller in both cases. If the induced current is reduced to values that are negligible compared with the earth-return current, the earth-return impedance of CP-OHGW (X-4) and OHGW (X-Y) could be determined with measured current, $I_{CP} + I_{X4}$ or $I_{CP} + I_{XY}$, respectively, and their corresponding grounding potential rise.

If $I_{IN45} = 0$ in Eqs 56 and 57, then

$$Z_{45} = \frac{V_{g1}}{(I_{x4} + I_{CP})} \tag{80}$$

This should compare with results obtained from Z_{45} by Eqs D1, D2, D3, and D4. And, if $I_{IN1} = 0$ in Eqs 68 and 69, then

$$Z_1 = \frac{V_{g2}}{I_{XY}} \tag{81}$$

which can be compared with the results calculated with Eq 37.

The parallel mutual impedance can be determined by Eq A1, and the 180° mutual impedances can be d etermined by inserting negative values for either P or C in the same equation. Eq A5 and Eq A1 in Appendix A can be used to calculate the mutual impedance between a current conductor and increasingly distant OHGW spans.

The OHN and URD cable of Substation-X are both at right angles to the fault currents, I_{f1} or I_{f2}, of the staged-fault tests. Thus, the mutual coupling to the fault currents is zero, and their input impedance can be calculated with V_{g1} or V_{g2} and input currents, I_2 and I_3, measured during each fault test.

The input impedance of the OHN is

$$Z_2 = \frac{V_{g1}}{I_2} \text{ or } Z_2 = \frac{V_{g2}}{I_2} \tag{82}$$

The input impedance of the URD cable sheath is

$$Z_3 = \frac{V_{g1}}{I_3} \text{ or } Z_3 = \frac{V_{g2}}{I_3} \tag{83}$$

The input impedance of the OHN can be estimated with Eq 37. The input impedance of the bare URD cable sheath can be calculated with the lossy-line formula of Appendix C. Comparison should be made with Eqs 82 and 83.

Copyright © 1992 IEEE All Rights Reserved

Copyright The Institute of Electrical and Electronics Engineers, Inc.
Provided by IHS under license with IEEE
No reproduction or networking permitted without license from IHS Not for Resale

11. Transfer Impedances to Communication or Control Cables

During line-to-ground faults on the power system, the insulation of communication lines serving substations and control cables extending outside of the substation grids may be exposed to grounding-system potential rise, induced voltages resulting from fault currents flowing in high-voltage lines and power cables, and induced voltages resulting from current flowing in extended grounding conductors. Methods for determining the total voltage stress on these cables are given in IEEE Std 367-1987 [3]. Methods of providing protection against the voltage stress are given in IEEE Std 487-1992 [4].

The induced voltage in a communications cable is equal to the current flowing in the power conductor multiplied by the transfer impedance (also called mutual impedance) between the power conductor and the communications cable. Methods of calculating the mutual impedance from the physical placement of the conductors, from the measuring frequency, and from the earth resistivity are given in Appendixes A and B and in IEEE Std 367-1987 [3]. Alternatively, the transfer impedance may be measured during staged-faults or current-injection tests, as discussed below.

Fig 11-1 shows a substation with two aerial transmission lines with overhead ground wires and two communication cables whose shields are grounded at locations remote from the substation.

The injection of a current, I_{f2}, into the grounding system using Line-2, as shown in Fig 11-1, will produce a grounding potential rise and an induced voltage in the communication cables. The measured communication cable voltages, V_{A2} and V_{B2}, are

$$V_{A2} = V_{g2} - V_i(A, 2) - V_i(A, \text{GW}-1) + V_i(A, \text{GW}-2) \tag{85}$$

$$V_{B2} = V_{g2} + V_i(B, 2) - V_i(B, \text{GW}-2) + V_i(B, \text{GW}-1) \tag{86}$$

where

V_{g2} is the ground grid potential rise.

$V_i(x,y)$ is the induced voltage on the communications cable x from the current flowing in line y.

GW-1 and GW-2 are the overhead ground wires 1 and 2.

Copyright © 1992 IEEE All Rights Reserved

Copyright The Institute of Electrical and Electronics Engineers, Inc.
Provided by IHS under license with IEEE
No reproduction or networking permitted without license from IHS Not for Resale

.

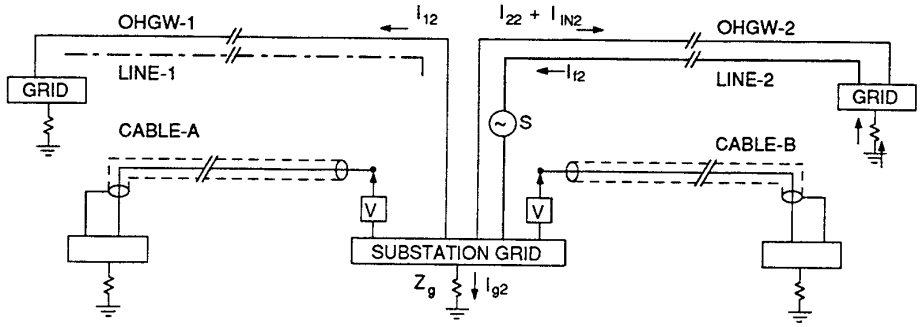

OHGW = OVERHEAD GROUND WIRE
LINE-1 = IN-SERVICE TRANSMISSION LINE
LINE-2 = OUT-OF-SERVICE TRANSMISSION LINE
S = INJECTION CURRENT SOURCE
A, B = COMMUNICATION CABLES
V = CABLE VOLTAGE

$$I_{f2} = I_{g2} + I_{12} + I_{22} + I_{IN2} \tag{84}$$

Figure 11-1—Measurement of Cable Transfer Impedance

The measured cable voltage, V_{A2}, will be less than the measured grid voltage because the net induced voltage is negative. The measured cable voltage, V_{B2}, will be greater than the grid voltage because the net induced voltage is positive. The induced voltages due to the injection current, I_{f2}, can be found by solving Eqs 84 and 85.

$$V_i(A_2) = V_{A2} - V_{g2} \tag{87}$$

$$V_i(B_2) = V_{B2} - V_{g2} \tag{88}$$

where

$$V_i(A_2) = -V_i(A, 2) - V_i(A, \text{GW}-1) + V_i(A, \text{GW}-2) \tag{89}$$

$$V_i(B_2) = V_i(B, 2) - V_i(B, \text{GW}-2) + V_i(B, \text{GW}-1) \tag{90}$$

These induced voltages are the result, directly and indirectly, of the injection current, I_{f2}. Currents I_{12} and I_{22} return to earth via their respective overhead ground wires and tower-footing resistances. After 10–15 towers, the current through the tower footings becomes negligible. Thus, in general, their mutual contributions in comparison to the mutual coupling from I_{f2} and I_{in2} will be less. The transfer impedances between Line-2 and cables *A* and *B* are

$$Z_o(\text{Line-2}, A) = \frac{V_i(A_2)}{I_{f2}} \tag{91}$$

$$Z_o(\text{Line-2}, B) = \frac{V_i(B_2)}{I_{f2}} \tag{92}$$

In a similar manner, the induced cable voltages can be determined by injecting test current, I_{f1}, with transmission line 1. The transfer impedances between Line-1 and cables *A* and *B* are

Copyright © 1992 IEEE All Rights Reserved

Copyright The Institute of Electrical and Electronics Engineers, Inc.
Provided by IHS under license with IEEE
No reproduction or networking permitted without license from IHS
Not for Resale

$$Z_o(\text{Line-1}, A) = \frac{V_i(A_1)}{I_{f1}} \tag{93}$$

$$Z_o(\text{Line-1}, B) = \frac{V_i(B_1)}{I_{f1}} \tag{94}$$

During an actual in-station line-to-ground fault, the vector sum of the zero sequence currents, I_{F1} and I_{F2}, will flow in the phase conductors of Line-1 and Line-2 respectively. Then, the communication cable voltages may be calculated using these currents and Eq 91, 92, 93, and 94 to obtain

$$V_A = V_G + I_{F1}Z_o(\text{Line-1}, A) + I_{F2}Z_o(\text{Line-2}, A) \tag{95}$$

$$V_B = V_G + I_{F1}Z_o(\text{Line-1}, B) + I_{F2}Z_o(\text{Line-2}, B) \tag{96}$$

$$V_G = (r_1 I_{F1} + r_2 I_{F2})Z_{gs} \tag{97}$$

where

V_G is the grounding-system potential rise during the fault.
r_1 and r_2 are the shielding factors for OHGWs of lines 1 and 2.
Z_{gs} is the measured grounding-system impedance.

When a substation has more than two transmission lines, the above procedures would be repeated for each line, and Eqs 95, 96, and 97 would be increased to include each line contribution and the shield factors.

The total voltage impressed on the cables could be calculated (see [3], [7], [B42], and [B45]) using:

1) The current distribution in the power system determined from the system fault studies
2) The current distribution in the grounding system estimated from measurements made during the current injection tests
3) The grounding potential rise estimated from the grounding-system impedance
4) The mutual impedances determined from the conductor configurations between the lines, the extended grounded conductors, and the communication cables (see Appendix A)

12. Step, Touch, and Voltage-Profile Measurements

12.1 General Requirements

When the calculated GPR exceeds a utility's predetermined safety factor of 2–5 kV, more extensive measurements should be made to allow confirmation of grid safety and maximum grid rise. Step, touch, and voltage profiles can be determined from additional measurements made: during fall-of-potential tests or staged-fault tests that are made to measure grid resistance or impedance. Section 8. of this guide reviews the various test-current-injection techniques, and Section 9. reviews the staged-fault method of measuring impedance of the grounding system. As current is circulated between the grounding-system grid and the remote current electrode, the potential is measured either between the grid and test electrodes or between the test-electrode pairs (spaced 1 m) located in or near the grounding system. The type of test chosen and the magnitude of the injection current required will depend on the capability of the measuring equipment to detect small potentials in the presence of the background voltages always prevalent from the power system and the amount of grid voltage needed to breakdown the corrosion of high-resistance connections of the grounding circuits paralleling the grid (see Sections 5. and 13.).

Copyright © 1992 IEEE All Rights Reserved

Copyright The Institute of Electrical and Electronics Engineers, Inc.
Provided by IHS under license with IEEE
No reproduction or networking permitted without license from IHS Not for Resale

12.2 Grid Safety Requirements

The safety characteristics of a substation grounding system depend upon the actual step, touch, and mesh voltages being less than or equal to the tolerable potentials calculated with IEEE Std 80-1986 [1] formulas. These formulas require the knowledge of the fault clearing time, the permissible current by body weight, the earth resistance between the hand and two feet in parallel, R_{fp}, and the earth resistance between the two feet, R_{fs}, see IEEE Std 80-1986 [1].

Design verification can be made at a number of sample locations throughout the station, such as in large grid meshes, corner meshes, corners that are external to perimeter fence, and areas where personnel activity is likely (such as at disconnect switch operators, substation equipment, perimeter fence gates, gas pumps and diesel oil fill pipes, nearby towers connected to the grid, across buried extended metallic conductors that connect to the grid, and any portion of the perimeter fence that the public is likely to contact).

Grounding-system safety assessment of step and touch potentials can be made with parameters measured with either the footprint-electrode method and the test-probe method or the simulated-personnel method.

12.3 Footprint-Electrode Method

IEEE Std 80-1986 [1] has established that the average adult foot has an area of 200 cm^2 and can be represented by a circular metal disk with a radius of 8 cm (16 cm diameter). Footprint electrodes are necessary when measurements are made to determine the resistances, R_{fp} (touch-resistance hand-to-feet) and R_{fs} (foot-to-foot resistance), used in the tolerable potential formulas of IEEE Std 80-1986 [1] or to ascertain any deterioration of the substatic, n insulating surface layer.

The application of footprint electrodes should take into account several factors. The first factor should be the influence of body weight on electrode contact. The second factor should be the treatment of the contact surface of the footprint electrode to ensure a reasonably low contact-resistance connection. For example, the use of a conducting medium between each electrode and earth, such as a conductive rubber pad, a sponge fastened to the foot electrode and wetted in a salt solution, or steel wool soldered to the metal disk, is recommended. Third, the insulating gravel or other surface under test should be soaked with water prior to the test to simulate the worst-case weather condition.

The series resistance, R_{fs}, between two footprint electrodes spaced 1 m apart and weighted with at least 20 kg can be measured with a 60 Hz source, voltmeter, and milliammeter [see Fig 12-1(a)]. Similarly, the resistance, R_{fp}, between footprint electrodes, connected in parallel and spaced i m from electrical equipment or grounded structures to grid, can be measured with a 60 Hz source, voltmeter, and milliammeter [see Fig 12-1(b)]. Typically, for a good grade of crushed rock (wetted) R_{fp} = 4500 Ω (for touch) and R_{fs} = 18 000 Ω (for step).

12.4 Test-Probe Method

The test-probe method of step-and-touch measurements is used to measure voltages from grid to probe or probe to probe during current injection. The test probe is a temporary ground rod that is 12–16 mm in diameter and 0.3–0.6 m long. Various probe configurations are used to measure mesh, touch, and step-and-grid profile potentials. Either a commercial earth tester instrument that gives measurements directly in ohms or any of the other current-injection test methods that give potential values that enable the impedance to be calculated from $Z = V/I$ may be used. Using the maximum projected fault-current flow from grid or grounding system to earth times the measured mutual resistance or the impedance will give the expected gradient voltages. These maximum step-and-touch potentials can be compared with tolerable potentials calculated from IEEE Std 80-1986 [1] or by using the foot-electrode resistance as measured in 12.3. The advantage of the test-probe method is that it provides direct measurement of potentials either for a test with long-duration current flow or for the short duration of a fault test. In addition, no wetting treatment is required for the insulating layer.

Copyright © 1992 IEEE All Rights Reserved

Copyright The Institute of Electrical and Electronics Engineers, Inc.
Provided by IHS under license with IEEE
No reproduction or networking permitted without license from IHS Not for Resale

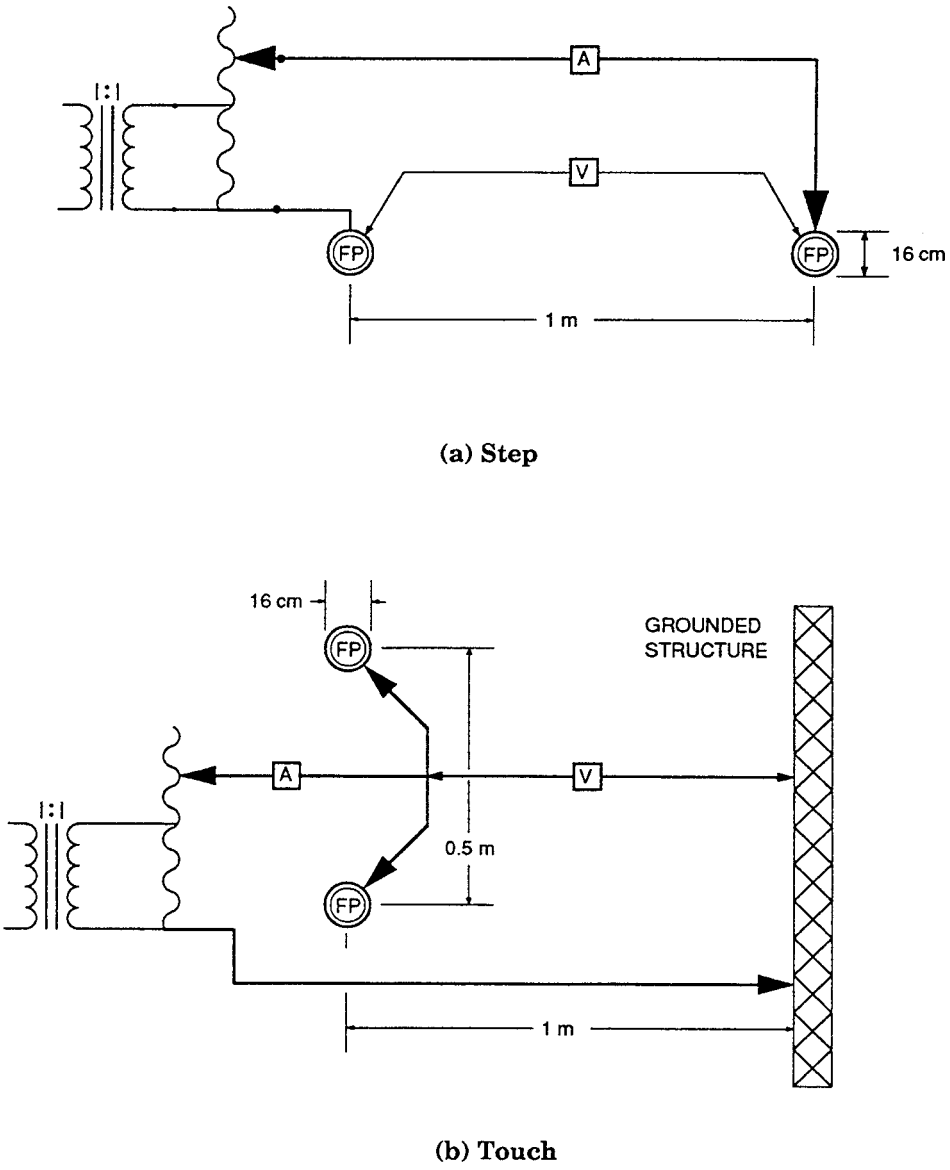

Figure 12-1—Footprint-Electrode Resistance Measurement

The test-probe method can be used to measure the external profile between probe and grid. Probe locations of 1 m, 2 m, 5 m, 10 m, 20 m, etc., from the perimeter fence are useful for determining touch potential to the fence, maximum external step potentials, and the extent of influence of the grounding system. Footprint electrode resistance in these areas, per 12.3, will be required for the tolerable potential assessment. Profiles inside the perimeter fence at a corner or large mesh should be taken at i m and 2 m from the fence and at the center of the mesh. It is recommended that profiles be taken laterally to metallic connections to the grid such as water lines, bare conductors, or buried URD-type HV cables. Profiles may be made in the yard in areas of major personnel activity at distances of I m and 2 m from grounded equipment, at entrance gates, and at areas where the public is likely to be. Step-and-touch potentials can be taken from the profiles of the various areas, or probes may be used to measure potentials at particular step-and-touch locations.

Copyright © 1992 IEEE All Rights Reserved

Copyright The Institute of Electrical and Electronics Engineers, Inc.
Provided by IHS under license with IEEE
No reproduction or networking permitted without license from IHS
Not for Resale

12.5 Simulated-Personnel Method (See [B24])

The first simulated-personnel method uses the concept of attaching lightweight electrodes to a test person's insulating boots and to an insulating glove, then having the person walk around the substation yard during current-injection tests to detect the location of maximum step-and-touch potentials (see Section 8.). For step assessments, the body resistance is simulated by a 1000 Ω resistor, see [1], connected between foot electrodes. For touch assessments, the foot electrodes are paralleled and connected with a 1000-Ω resistor to the hand electrode. As the workperson paces across the test area or touches selected equipment, an electronic device measures the voltage drop across the resistor and provides a warning in the form of an acoustic or visual signal whenever the predetermined value is exceeded. However, to approach worst-case conditions, these measurements should be made during inclement weather after the insulating cover is thoroughly wetted. As the test current is only a small fraction of actual fault values, the predetermined value will be, correspondingly, a proportional part of tolerable step-and-touch potentials. Further measurements can then be made by other methods, whichever would be appropriate, in the suspected locations, thus reducing the time and cost of measurements. Measuring devices and test leads must be adequately shielded from the effects of the 60 Hz pickup from the power system, and a constant current level must be maintained during the step-and-touch survey. The high resistance of the footprint electrodes is paralleled with a 1 kΩ resistor. Therefore, the input resistance of any potential-detection or voltage-measurement circuit must be correspondingly higher (100 kΩ or more). Furthermore, insulating boots and gloves must be capable of withstanding corresponding step-and-touch potentials that would be present during a line-to-ground fault.

The second simulated-personnel method uses the foot electrode, taking in account the influence of the body resistance, R_b, and the earth resistance, R_f, (between the feet and the soil) on the measured values. This is achieved by using two electrodes to represent the influence of the feet, with a 20 kg weight for each foot electrode to insure good contact with the insulating cover, and a resistor to represent the body resistance.

The estimated voltage across body during line-to-ground fault is calculated by

$$V_b = V_k \cdot \frac{\text{fault current flow through grounding system}}{\text{test current flow through grounding system}} \tag{98}$$

The tolerable potential across body is calculated by

$$V_b \le 1000\frac{I_b}{\sqrt{t}}, \text{ in V} \tag{99}$$

where

V_k = step or touch voltage across 1000 Ω resistor measured during grounding system test (see Fig 12-2), in V
I_b = tolerable body current specified by IEEE Std 80-1986 [1], i.e., 0.116 A for a 50 kg person
t = duration of fault current, in s

The standard setups for measuring touch-and-step voltages that meet the measurements specified above are shown in Fig 12-2. The conventional resistance of the human body is represented by a 1 kΩ resistor, see IEEE Std 80-1986 [1]. The voltmeter should have an internal impedance of 100 kΩ or more so as not to influence the measurements. As the current injected for the test is much smaller than the expected maximum fault current, the step-and-touch voltage values recorded using the test setups of Fig 12-2 can be extrapolated to maximum values, see Eq 98, and then compared with permissible values, see Eq 99. The tolerable body potential is based on the nonfibrillating body currents from IEEE Std 80-1986 [1].

Copyright © 1992 IEEE All Rights Reserved

--`,,`-`-`,,`,,`,`,,`---

Copyright The Institute of Electrical and Electronics Engineers, Inc.
Provided by IHS under license with IEEE
No reproduction or networking permitted without license from IHS Not for Resale

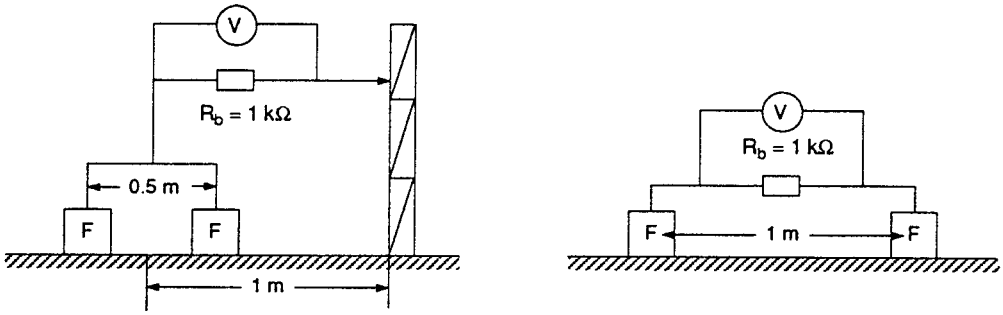

Figure 12-2—Measurement of Step-and-Touch Voltages During a Low-Voltage Test With Simulated Personnel

The resistivity of the insulating rock inside the substation or of the earth outside the substation that is in contact with the foot electrodes can be estimated from the second simulated-personnel method (see [8], [B16], and [B24]) if, during current injection, touch or step potentials are measured with and without R_b connected, see Fig 12-2.

Then, from the Thevenin equivalent circuit for the foot electrodes,

$$V_t = \frac{V_{tk}}{R_b}(R_{fp} + R_b) \tag{100}$$

$$V_s = \frac{V_{sk}}{R_b}(R_{fs} + R_b) \tag{101}$$

where

V_{tk},V_t = touch voltage with and without R_b, in V
V_{sk},V_s = step voltage with and without R_b, in V
R_b = 1 kΩ resistance of body, in Ω (see IEEE Std 80-1986 [1])
R_{fp} = 1.5 ρ_s earth resistance two feet in parallel, in Ω (see IEEE Std 80-1986 [1])
R_{fs} = 6.0 ρ_s earth resistance between feet, in Ω (see [1])
ρ_s = resistivity of the earth's surface layer, in Ω-m

Then,

$$\rho_s = \frac{10^3\left(\frac{V_t}{V_{tk}} - 1\right)}{1.5} \tag{102}$$

or,

$$\rho_s = \frac{10^3\left(\frac{V_s}{V_{sk}} - 1\right)}{6.0} \tag{103}$$

The advantage of applying the second simulated-personnel method with and without the body resistance, R_b, is that all variables (V_t, V_t, V_{tk}, V_s, and V_{sk}) are directly measured without any assumptions or measurement of ρ_s and R_f.

Copyright © 1992 IEEE All Rights Reserved

Copyright The Institute of Electrical and Electronics Engineers, Inc.
Provided by IHS under license with IEEE
No reproduction or networking permitted without license from IHS
Not for Resale

Measurement of step-and-touch voltages, with and without R_b, using footprint electrodes will simulate personnel exposure. However, test-probe electrodes (see 12.4) cannot be used to approximate feet in Eqs 100 and 101. Measurements can be extrapolated to maximum values, as in Eq 98, and compared with Eq 99.

13. Instrumentation Components

13.1 Introduction

This section is intended to supplement the material in IEEE Std 81-1983 [2] on instrumentation (Section 12.). That section describes several instruments, most of which were designed specifically for grounding system measurements:

1) Ratio ohmmeter
2) Double-balance bridge
3) Single-balance bridge
4) Ammeter-voltmeter
5) Induced polarization unit
6) High-frequency earth resistance meter

A further category, *direct-reading ohmmeters*, could be assigned to a new class of battery-powered testers, often with digital displays. More generally, the function of current source and potential detector can be provided by separate instruments as in (4) above. The latter may include

1) Electromagnetic oscillograph
2) Tuned voltmeter
3) Magnitude-phase nuller
4) Fast Fourier Transform analyzer
5) Sine wave network analyzer

Many of detectors, (1) to (5) above, can be used with several of the following current sources:

1) Staged faults
2) Switched power-frequency source
3) Welding set or portable power generator
4) Low-power sine wave source
5) Low-power random noise source
6) Periodic (nonsinusoidal) generator
7) Power-system switching transient
8) Pulse generator

Furthermore, the measurement of current distribution (current splits) in the grounding system requires the choice of a transducer:

1) Current transformer
2) Resistive shunt
3) Inductive pickup
4) Hall-effect probe

Thus, a matrix of testing systems is possible, with users able to choose from a variety of components.

Copyright © 1992 IEEE All Rights Reserved

Copyright The Institute of Electrical and Electronics Engineers, Inc.
Provided by IHS under license with IEEE
No reproduction or networking permitted without license from IHS Not for Resale

This diversity has evolved both through changes in technology and the need to increase the performance of measurements in several areas:

1) Resolving impedances under 0.5 Ω (e.g., in measuring the impedance of large interconnected stations), Wenner resistances for probe spacing beyond 20 m, and step potentials that are a fraction of the ground potential rise, or in testing for small current splits with a current transformer and shunt
2) Rejecting high-level power-frequency interference in either the potential or current circuits
3) Determining the components of complex impedance
4) Generating a test frequency close to the power frequency so as to more nearly simulate the effect of ac inductive coupling
5) Generating a test level high enough to overcome the nonlinearities of corrosion and/or skywire saturation

The purpose of this section is to familiarize the user with the performance of different instrumentation systems relative to these constraints.

13.2 Direct-Reading Ohmmeters

Recently, several ground resistance testers, often with digital displays, have appeared on the market, see [B10], [B12], [B20], and [B32]. The resolution (to 2 mΩ) and selectivity of these testers are superior to most testers described in IEEE Std 81-1983 [2], thus making these devices candidates for special tests.

Current is typically supplied from a battery-driven inverter as a symmetric square wave with regulated level, e.g., ± 10 mA at 130 Hz. For reasons of safety and battery economy, the voltage may be limited to about 30 V. Thus, a current-probe resistance above 3 kΩ would invalidate the reading, and a warning light of this condition is usually provided.

The potential detector can be electrically isolated (through a switched power supply) to allow four-wire measurements. A high-impedance input stage with range switching may then feed an electronic detector. Here, transistors function as switches synchronized to the source frequency analogous to the mechanical reversing commutator of the ratio ohmmeter in IEEE Std 81-1983 [2]. This is followed by low-pass filtering, possible analog-to-digital conversion, and display.

The small size, light weight, and digital display make these testers convenient to use, and reduce the chance of recording incorrect readings or ranges. As with most other testers, a bad connection or high probe resistance in the potential circuit may pass unnoticed. This can be prevented by adding a switch to interchange current and potential probes. The low-current warning light then serves to check the potential circuit. The resistance reading should remain constant for electrically linear networks due to reciprocity. At the same time, reversing the polarity of the potential detector with respect to the current source (giving a “negative” resistance reading) serves to check for offset error. This works only if the display is capable of indicating either polarity.

Instruments that measure only resistance will not be suitable for measuring grounding-system impedances below about 0.5 Ω.

13.3 Electromagnetic Oscillograph

This time-domain detector is often used with staged-fault tests to record up to about 28 current or voltage waveforms on a strip of light-sensitive paper, see [B37] and [B39]. It is reliable, provides magnitude and phase relationships, and allows for some signal processing after the test, e.g., disregarding noise, harmonics, or asymmetry. It is necessary to anticipate signal levels in advance, adjusting the sensitivity to give 4–6 cm deflections. A phase angle resolution of 1.5–2° will require recording speeds of 3–4 m/s (120–160 in/s). A signal conditioner with variable gain, overvoltage protection, matched damping resistances, and built-in calibrator saves time. Multichannel time-domain measurements can also be made with tape recorders (which tend to have a limited dynamic range) or digital memory recorders.

Copyright © 1992 IEEE All Rights Reserved

Copyright The Institute of Electrical and Electronics Engineers, Inc.
Provided by IHS under license with IEEE
No reproduction or networking permitted without license from IHS Not for Resale

13.4 Tuned Voltmeter

This class of detector is convenient where impedance magnitude but not phase angle is to be measured using a sine wave source shifted with respect to the power frequency, see [B46]. Power-system noise 5–10 Hz from the test frequency can typically be rejected by 60 dB in commercially available, frequency-selective voltmeters. An outboard power-frequency notch filter can provide further rejection, but attenuation at the test frequency must be considered. It is necessary that the generator, notch filter, and voltmeter filter remain tied together in frequency — drifting with temperature was noted in [B31] and may escape detection.

13.5 Fast Fourier Transform Analyzer

This dual-channel detector, which displays impedance magnitude and phase, can be used with a pseudo-random (see [B26]), swept sine wave (see [B37]), or switching transient (see [B22]) source. Examples of switching transients that could serve to test ground impedances with this instrument include staged faults, former inrush, grounded capacitor bank energization, or line switching. The analyzer is contransfigured with a CT, as shown in Fig 13-1, to directly measure impedance using the ratio of channels. The results are not sensitive to changes in source level if both the inputs are simultaneously sampled.

The instrument typically digitizes each channel as a finite-length periodic sequence (called an ensemble). The complex spectrum of each ensemble is calculated in a fraction of a second using the Fast Fourier Transform algorithm and is displayed on a CRT. The spectra for ensembles (which may overlap) can be averaged to reduce scatter (noise), which varies inversely with the square root of the number of averages. False spectra due to nonmatching start and finish samples in an ensemble can be reduced by window filters that attenuate the ensemble front and tail.

The spectrum near the power frequency will be distorted by noise, but it can be interpolated from higher and lower frequencies. With the impedance usually increasing with frequency, and considering the scatter of the spectrum, the horizontal built-in cursor giving digital readout requires somewhat subjective positioning. For a given power-frequency level of interference, choosing a wider bandwidth reduces this scatter but makes interpolation more difficult due to the greater curvature of the impedance plot. The spectrum will tend to be more noisy with a switching transient source because averaging is usually impractical, except for longer lasting transients, e.g., transformer inrush.

13.6 Sine Wave Network Analyzer

This dual-channel detector is used normally with a sinusoidal test source but will respond to a selected fundamental or harmonic in more general periodic waveforms, see [B8]. Some instruments sample the two channels alternately over time, which requires that the source level be kept constant to maintain ratio calibration. Typically, an internal sine wave generator supplies, or is synchronized (triggered) by, the test signal. The input channels are sampled, digitized, and multiplied by the cosine and sine functions of the internal generator at each point on the wave. The products averaged over a selectable number of cycles give the real and imaginary phasor signal components. Signals at other frequencies tend to average to zero. Individual channels or their ratio can typically be numerically displayed in Cartesian or polar coordinates. The frequency can be swept, e.g., in measuring harmonic-system impedances.

Copyright © 1992 IEEE All Rights Reserved

Copyright The Institute of Electrical and Electronics Engineers, Inc.
Provided by IHS under license with IEEE
No reproduction or networking permitted without license from IHS

Not for Resale

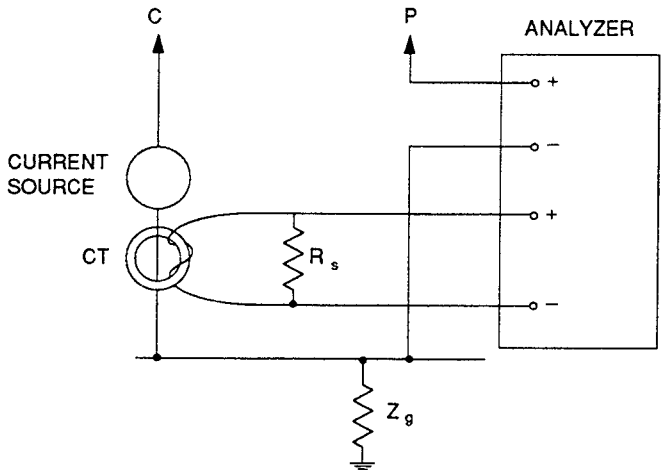

Figure 13-1—Grounding Impedance Measurement Using a Network Analyzer

13.7 Staged Fault

This source typically uses a radial line feed to an intentional single line-to-ground (SLG) fault to produce test currents above I kA, see [B37] and [B39]. Station transformers and variable line lengths give flexibility to the fault level. The fault duration is controlled through timers on the test breaker, and provision for automatic tripping of a backup breaker without load loss is likely to be a requirement. The detector is usually an electromagnetic oscillograph, but multichannel analog tape or digital memory storage, followed later by a Fast Fourier Transform analysis, could offer greater accuracy.

Staged faults are useful in correctly simulating line or cable shielding, at least for one circuit (which should be chosen as representative of other lines). They are costly in the sense that relatively few switching events force the use of multichannel signal recording, i.e., many cables have to be located and proven out in advance. Channel sensitivities have to be anticipated and could be in error giving channel saturation or poor resolution. Hazardous potentials on test wiring must also be anticipated.

13.8 Switched Power-Frequency Source

This method uses a transformer to supply 10–100 A of power-frequency current to the test circuit. In the interference-compensation version, the interference present at the detector (usually a voltmeter) is nulled with the current off, using a low-power magnitude and phase-controllable source in series with the detector. The detector reading with the test current on is then recorded. In the polarity-reversal version (see [B25] and [B44]), readings are taken for either polarity of the transformer connection and for zero test current. Each of these three readings are then squared, the first two are averaged, and the third is subtracted. The square root of the result should represent the test voltage only.

A transformer source is both robust (important where high levels of interference are induced into the current circuit) and inexpensive. Contactors may be easily configured to provide the polarity-reversal function. However, the sensitivity of this method is limited by the tendency of the interference levels to vary with time.

13.9 Welding Set or Portable Power Generator

This source uses a gasoline-powered ac generator (e.g., ac welding set) to supply 10–100 A current, with the governor readjusted to operate several Hz away from the power frequency, see [B9]. This equipment is robust enough to supply test current to a line (taken out of service) where induction from adjacent operating circuits could destroy electronic

Copyright © 1992 IEEE All Rights Reserved

Copyright The Institute of Electrical and Electronics Engineers, Inc.
Provided by IHS under license with IEEE
No reproduction or networking permitted without license from IHS
Not for Resale

sources. Variacs or transformers can be used to optimize source and load impedances. The detector can be a sine wave or spectrum analyzer, a magnitude-phase nuller, or a tunable voltmeter. When the test and power frequency differ by only 0.1–0.5 Hz, a nonfrequency-selective voltmeter can be used as a detector (beat-frequency method). The maximum and minimum deflections are recorded and then added or subtracted for test levels higher or lower than interference, respectively. These generators are almost indestructible and reasonably portable. When used with HV-circuit current injection, the shielding and induction to communication circuits are correctly simulated. However, the current regulation and frequency tend to be less precise than for electronic sources.

13.10 Low-Power Sine Wave Source

This method uses a power oscillator (see [B46]) or sine wave network analyzer feeding a linear amplifier to supply a test level of 10–1000 W (1–10 A into a 10 Ω load). The frequency can also be swept over a bandwidth to obtain the grounding impedance for power-system harmonics. When used at operating stations, the power-frequency residual current should first be monitored as some electronic equipment is not rated to absorb power at the output. The output current can again be optimized with a variac and, if the frequency is fixed and the current circuit impedance is inductive, a series or parallel resonating capacitor can further increase the level. The detecter is again flexible, i.e., a sine wave or spectrum analyzer, magnitude-phase nuller, or tunable voltmeter can be used.

This method is especially suited for making narrow bandwidth measurements, but should only be applied where induction and interference levels are modest.

13.11 Low-Power Random Noise Source

This broadband test signal may be supplied and used with a spectrum analyzer to make measurements over a selected frequency bandwidth, see [B26]. The noise level should be rolled off above and below these limits to maximize the effective test current level. This method is equivalent in theoretical performance to the swept-frequency sine wave method, although particular instruments will vary. A linear amplifier and variac are desirable, as with the previous sine-wave source. Note that capacitive compensation of the circuit inductance is not feasible for wider bandwidths.

13.12 Periodic (Nonsinusoidal) Generator

Certain waveforms can be generated more efficiently by electronics than continuous sine waves or random-level noise. For example, the power dissipation in a push-pull amplifier for a full level symmetric square wave is relatively modest. Alternatively, a thyristor switch can be efficiently used to remove every second powerfrequency cycle giving a broad-bandwidth test signal. This method could even be powered by the current normally induced into the test circuit by adjacent operating lines. Thirdly, a square wave with pseudo-random periods could be used to generate an efficient noise signal. All of these methods would be suitable for use with a spectrum analyzer. The first method could also be used with a sine wave analyzer synchronized to the fundamental or harmonic frequencies.

13.13 Power-System Switching Transient

Normal switching transients associated with lines, transformers, or grounded capacitor banks could be used with spectrum analyzers to measure grounding-system impedances [B22]. The injected transient current would be monitored using normal CTs in the neutral or zero-sequence mode. For a resolution of 10%, the spectral current due to the switching should exceed the random background level by a factor of at least 10. Field testing is needed to show which frequencies are optimal. For example, the transformer inrush current may be rich in the second harmonic where the power system background level should be low.

Copyright © 1992 IEEE All Rights Reserved

Copyright The Institute of Electrical and Electronics Engineers, Inc.
Provided by IHS under license with IEEE
No reproduction or networking permitted without license from IHS Not for Resale

13.14 Pulse Generator

Measurements of grounding systems at wide bandwidths can be made with impulse sources as described in 10.1 of IEEE Std 81-1983 [2]. When the potential and current signals are fed to a two-channel spectrum analyzer with ratio output, waveform distortion is of little consequence. Thus, crudely-fashioned generaters using line or bus capacitance and sphere gaps could provide an inexpensive high-power source.

13.15 Current Transformer (CT)

Clip-around current transformers are often the most convenient method of measuring current splits in grounding systems. Since the currents are usually small, low ratios and relatively large shunts would be desirable. However, the burden must be kept small compared to the magnetizing impedance to prevent nonlinearity or phase error at low currents (toe region of the magnetization curve). The accuracy should be experimentally verified as in Table 2. With long runs and low signal levels, the CT cable should be a good quality twisted (balanced) pair with balanced terminations. The mating iron path surfaces should be kept clean and the calibration should be checked periodically among all CTs. The small window size of most commercial CTs can be a limitation.

Table 2—150/5 A, Typical Split Core CT Accuracy for Low Currents

CT Shunt (Ω)	Primary Current (A)	Error (%)
0.67	0.1	-1
0.67	1.0	-2
0.67	10.0	-1
0.67	100.0	reference
2.6	0.1	-12
2.6	1.0	-7
2.6	10.0	-5
2.6	50.0	reference

13.16 Resistive Shunt

At frequencies above several kHz, the response of many CTs will no longer be constant due to winding resonances or eddy currents in the magnetic core. Resistive shunts can be constructed, often using a coaxial shunt of modified geometry, to reproduce wide bandwidths, see [B27] and [B33]. Limitations include an upper current rating (CTs saturate without damage to the burden), a relatively modest output, the need to insert the shunt in series with the primary conductor, the unbalanced output termination, and the need to keep the shunt at ground potential.

13.17 Inductive Current Pickup

At higher frequencies, the Rogowski coil has been a popular current transducer because its output voltage is proportional to the derivative of the primary conductor current, see [B23]. The device physically resembles a current transformer without the magnetic core or low-impedance burden. With turns uniformly spaced along its length and the ends brought together around the primary conductor, this inductive pickup effectively models Ampere's Law and the output remains constant over arbitrary positioning. The challenge in building a 60 Hz Rogowski coil is to obtain sufficient sensitivity. With 1000 turns, a turn area of 10 cm^2, and a length of 50 cm, the output is only 2 μV/A. More turns or a larger area tend to reduce the device's wrap-around flexibility. An alternative is to construct a rigid, concentrated coil that is rotated about the primary conductor with the output averaged at several positions.

Copyright © 1992 IEEE All Rights Reserved

Copyright The Institute of Electrical and Electronics Engineers, Inc.
Provided by IHS under license with IEEE
No reproduction or networking permitted without license from IHS Not for Resale

13.18 Hall-Effect Probe

These probes have historically provided dc capability without the need to break the primary circuit. For low-frequency measurements of large diameter conductors, they may have greater sensitivity with less bulk than inductive pickups. Analogous to the Rogowski coil, a number of these devices would be placed like beads around the primary conductor with their output summed.

13.19 Remote Synchronization of Test Signal

To reduce the time associated with laying out long cables to remotely located current transducers, some type of signal telemetering may be desirable. One scheme uses a sine wave network analyzer at the remote location with only the synchronization signal telemetered over a rewired two-way radio. Since the analyzer trigger level is not critical, there is no need to calibrate the radio channel gain or linearity. Incidentally, the injected current has been found unsuitable as a trigger signal when high powerfrequency induction is also present. However, the generator output is usually phase-locked to the ignition coil of the driving gasoline engine, which provides a convenient trigger signal. An initial reading of the injected current is used to calibrate the analyzer magnitude and phase.

13.20 Measurement Environment and Signal Transmission

Measurement of grounding potentials (GPR, step-and-touch, mutuals to paralleling utilities) and current distributions during tests of the grounding system requires the installation of transformation devices (CTs, shunts, PTs, or voltage dividers) at diverse locations in the high-voltage substation. The measurement system is composed of a transformation device (sensor), the transmission of its output voltage or current to a central location, and a measuring or recording instrument. Measurements made in an energized substation expose the measurement system to the steady-state sources of interference voltage described in Section 5. and to transient current flow in the overhead bus and grid. Current flow to the grid, resulting from high-voltage transients, will be either by low-impedance connections from the bus to ground, such as lightning arrestors, protective gaps, and grounded-wye shunt capacitors, or by the frequent operational procedures in power substations that deenergize or energize the capacitance of high-voltage equipment that is being removed or returned to service. Examples of equipment that are frequently energized or deenergized in substations will include high-voltage power circuit breakers, high-voltage bussing, and grounded-wye shunt capacitors.

Transverse-grid and mutually-coupled voltages in the kVs should be expected. However, their magnitude will depend on bus voltage, bus length, grid conductor arrangement, earth resistivity, the high-voltage capacitance being switched, and test cable routing. See [10], [B34], and [B36].

In order to protect measuring equipment installed temporarily in a high-voltage substation from catastrophic failure, the following items are:recommended:

1) Use isolation transformers having secondary shielding, low capacitive coupling from primary-to-secondary, and a 5 kV rating ahead of test equipment installed in the energized yard to provide insulation and isolation between the station-service remote ground and local grid potentials. In the case of an arc-over primary-to-shield, grounding the shield near the test equipment will protect the test equipment connected to the transformer secondary. Alternately, if the core windings of the transformer are fully floating with respect to earth, and there is a low value of interwinding capacitance, then the winding may be unshielded.
2) When high-voltage equipment is being energized or deenergized by operating personnel, remove all input leads from the test equipment.
3) Route cables away from high voltage bussing or possible sources of transient current flow through the grid. The lowest transverse grid transient potentials are along the perimeter fence.
4) Provide metallic shielding for secondary cable-pairs and ground the shields at each end.
5) When measurements are made in areas where high transient grid potentials will occur, additional shielding can be provided by paralleling cable shields with a 2/0 conductor, laying cables on a grounded copper sheet (see [B28]), or enclosing cables in a grounded steel conduit.

Copyright © 1992 IEEE All Rights Reserved

Copyright The Institute of Electrical and Electronics Engineers, Inc.
Provided by IHS under license with IEEE
No reproduction or networking permitted without license from IHS Not for Resale

6) Minimize cable loops by routing cables radially from the measurement equipment in a layout similar to a tree with the trunk starting at the central location and branching out from the cable run to each measurement point, see [10].
7) Interference voltages that add to output voltages can be minimized by using triax cable (coax cable with a outer insulated shield) whose outer shield is grounded at both ends while grounding the inner shield at only one end (see [10]), or by using shielded twisted-pair cable with the shield grounded at both ends.

Short-duration, high-frequency remnant voltages on signal conductors will not affect low-frequency measurements. However, grounding the shield at both ends permits induced fundamental and harmonic-frequency currents to circulate in the shield, which will modify low-level measured quantities.

When high transverse grid voltage is unlikely, when negligible induced voltage is expected, and when safety of personnel is not jeopardized, electrostatic voltages can be reduced by grounding the cable shield at one end. For low-level signals, grounding the shield at the source end reduces the effect of cable capacitance, prevents common-mode current from flowing through the signal end, and significantly improves common-mode rejection, see [B14].

Receiving-end measuring equipment can be completely isolated from high transverse-grid potentials and mutually-coupled cable potentials can be eliminated by the use of signal transmission systems such as fiber optics or radio telemetry, see [B28] and [B15].

13.20.1 Transmission by Fiber Optics

The use of fiber optic cable without metallic strengthening members for signal transmission eliminates electrostatic and electromagnetic interferences. Because this provides electrical isolation, there is no problem with high-voltage grid potentials. Multifiber cable can be used without any crosstalk interference.

Fiber optic systems utilize converters to change the output volts or amperes of the transformation device into light signals for transmission, and light pulses are converted back to electrical quantities at the measuring end. Two types of conversions are presently used.

The analog-to-fiber-optic-to-analog (AFA) converter is limited in transmission distance (<100 m) and in signal amplitude (>10 mV). However, it is not expensive, and it is quite easy to manipulate the cables.

The analog-to-digital-to-fiber-optic-to-digital-to-analog (ADFDA) converter is more popular because of its flexibility. The light pulse may be of different modulation mode (FM, PCM, FSK, etc.). Because this converter can be supplied from a battery pack, the distance between the signal source and the converter can be minimized. This transmission medium is much more expensive, but its linearity and resolution are better.

Fiber-optic link performance is characterized by two parameters: bandwidth and signal-to-noise ratio (S/N). The required frequency bandwidth for grounding measurements is narrow (a few kHz) and can be easily met by commercial fiber optic links. The S/N, however, should be examined, and the resolution of the instrumentation fed by the fiber optic links should be in line with the actual S/N, see [B29].

13.20.2 Transmission by Radio Telemetry

This transmission medium is very useful when a large number of measurements have to be made, when many of these measurements have to be performed at some distance away, and when measurements have to be compared to the injection current. The use of this medium eliminates the installation of cables but is constrained to an agreement with government for the use of a specific radio frequency in a specified area.

Good resolution and linearity can easily be obtained. Accurate calibration procedures will minimize phase shift errors. Climatic conditions may have some influence on transmission. The same modulation modes associated with fiber optics are possible.

Copyright © 1992 IEEE All Rights Reserved

Copyright The Institute of Electrical and Electronics Engineers, Inc.
Provided by IHS under license with IEEE
No reproduction or networking permitted without license from IHS Not for Resale

14. Instrument Performance Parameters

This section shows how the measurement errors of different instrumentation systems can be estimated. The ability to specify a tolerance in a field measurement allows one to trade off the cost and benefit of different test methods.

14.1 Reading Accuracy

Generally, reading errors fall into the following three types:

1) An absolute error independent of test resistance, e.g., from limited scale resolution, vibration in a hand-cranked tester, limited galvanometer sensitivity in a bridge-type device, or drift in the meter zero position
2) A relative error from poor calibration or gain changes over time in instrument components
3) A nonlinear error from detector characteristics

When measuring resistances under 0.5 Ω, usually the first error dominates in ground testers because readings fall on the lower end of the lowest available range. Conversely, laboratory instruments normally have great range flexibility and the second error tends to become more significant. The third type is often of minor importance.

The absolute error can be estimated by operating an instrument with the potential terminals short-circuited. The zero offset should be noted and readjusted if possible. The worst nonzero reading, in ohms, should then be estimated for each range that could be interpreted, taking into account the following:

1) Initial error in the zero adjustment and subsequent drift between normal resets
2) Scale resolution, e.g., smallest graduation for analog meters, most significant digit for numeric output, or hulling sensitivity on balance-type devices
3) Pointer noise or fluctuations, e.g., pointer sticking or vibration on analog meters, instability in digits for numeric output, or nulling knob hysteresis (looseness) for balance-type devices

For scales that have nonuniform graduations, note the variation in absolute error for several positions.

The relative error, in ohms, is estimated using a resistance of known value, which is close to the full-scale value for each range. It should be read as only that part of the measured error that exceeds the previous absolute error. An allowance for further drift in calibration may be prudent.

The nonlinear error, in ohms, is similarly estimated using a test resistance near center scale on each range. The test reading should first be corrected for any relative error. Again, the nonlinear error is only that part that exceeds the absolute error.

For a given meter reading, a tolerance can thus be estimated from the sum of the absolute error, the relative error proportioned to the point on scale, and the nonlinear error, which, for simplicity, is held constant over the scale. Since field reports rarely include tolerances, users of such data may want to become familiar with the peculiarities of different instruments and should at least ask for the model name and range used for each reading. Table 3 lists reading accuracy estimated for typical instruments.

14.2 Selectivity

Errors also result when an instrument is not selective enough to cope with power-frequency interference. The effect is usually to increase the resistance reading by an error of

$$\Delta R = \frac{FN}{I} \tag{104}$$

Copyright © 1992 IEEE All Rights Reserved

Copyright The Institute of Electrical and Electronics Engineers, Inc.
Provided by IHS under license with IEEE
No reproduction or networking permitted without license from IHS Not for Resale

where

F is a selectivity factor
N is the interference (noise) potential
I is the test current

An ordinary voltmeter is not selective in frequency and has an F of unity for peak reading types, and an F of less than one for other detectors. Such meters may be used in the method described in 13.9.

Instruments that are frequency selective have an F smaller than unity that can be experimentally determined. Fig 14-1(a) shows the normal connection of a ground tester when measuring the calibration resistance, R. In Fig 14-1(b), a signal generator set to the power frequency is used to add an interference component, N, to the resistance potential. As N is increased from zero, a proportional error is noted as diverging fluctuations in the indicated resistance. The peak error is substituted in Eq (1) to find F. Fig 14-1(c) shows the normal connection used with a sine wave or spectrum analyzer to check its calibration. A power amplifier boosts the test signal while a current transducer feeds back a current signal. The analyzer divides channel A by B to give a direct reading in ohms. The power amplifier, current transducer, and R are not required in Figure 14-1(d) for measuring the selectivity if Eq 104 is divided by R giving, in per unit,

$$\underline{\Delta}r = \frac{FN}{S} \tag{105}$$

Again, as N is increased from zero, a proportional error r is noted, from which F can be estimated.

The following observations describe the mechanisms that appear to limit selectivity in typical instruments:

1) Continuous vibration or rolling numerical displays that indicate insufficient low-pass filtering (mechanical or electronic) or averaging
2) Erratic pointer deflection or numerical display due to mechanical or electrical jitter in the signal detector, i.e., due to changes in mechanical commutator contact or electronic timing
3) Bit resolution for instruments using analog-to-digital conversion, which introduces a nonlinearity, thus reducing selectivity
4) Fluctuating readings ill sine wave analyzers due to a finite averaging of noise cycles (note that digital filters have repetitive null patterns that can be exploited by judiciously selecting the test versus power frequency)
5) A noisy response function in spectrum analyzers due to a limited ratio of test to interference levels (which could be smoothed by post processing)

Copyright © 1992 IEEE All Rights Reserved

Copyright The Institute of Electrical and Electronics Engineers, Inc.
Provided by IHS under license with IEEE
No reproduction or networking permitted without license from IHS Not for Resale

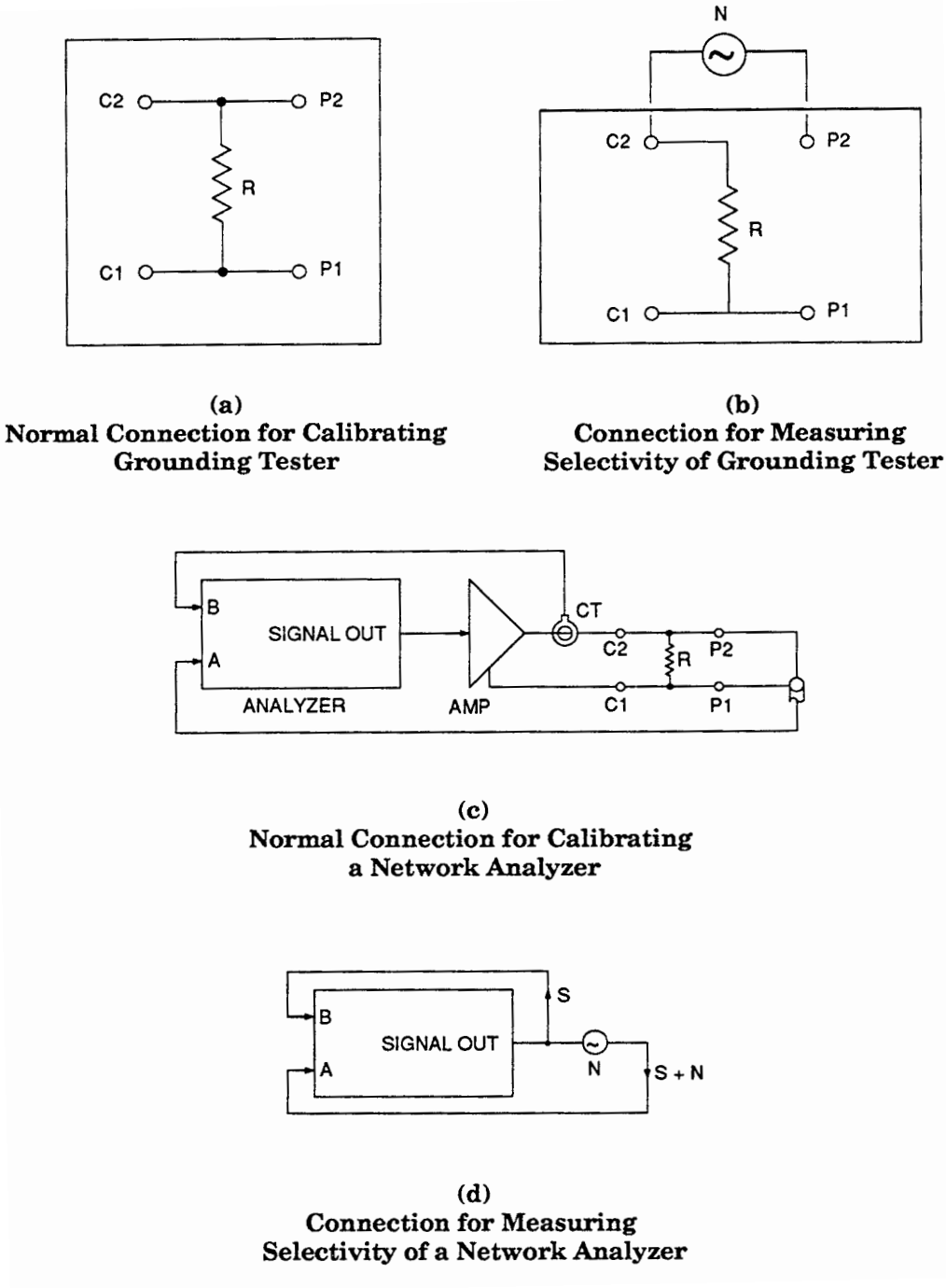

Figure 14-1—Instrument Calibration and Selectivity Measurement

If field tests include a measurement of *N* and *I*, the ratio can be calculated as a noise resistance, *R*. The product of *F* and *R* gives an estimate of the measurement error, in ohms, resulting from interference.

Table 3 lists the measured selectivity factor, *F*, for different instrument types. Note the wide range in test current and the improved selectivity necessary for low currents. Also note the rather good selectivity of ground testers compared

Copyright © 1992 IEEE All Rights Reserved

Copyright The Institute of Electrical and Electronics Engineers, Inc.
Provided by IHS under license with IEEE
No reproduction or networking permitted without license from IHS
Not for Resale

to laboratory instruments, which is less surprising when the frequency difference from 60 Hz is considered. For quick reference, the center column indicates the error resulting with 10 V pk interference and maximum indicated test current.

Table 3—Measured Performance Parameters of Typical Ground Testers

	Reading Accuracy (Ω, %)	Selectivity *F* (pu)	Interference Error *FRn* (Ω)	Test Current (A, pk)	Test Frequency (Hz)
Ammeter, shunt and peak reading voltmeter*	±2%	1.0	0.1	10–100	60
Hand-cranked ratio ohmmeter	±0.05 Ω	0.004	0.04	1.0	70–80
Single-balance bridge					
Model A	±0.01 Ω	0.003	0.4	0.07	97
Model B	±0.01 Ω	0.003	0.6	0.05	108
Model C	±0.02 Ω	0.0001	0.02	0.05	130
Direct-reading ohmmeter					
Model A	±0.02 Ω	0.00003	0.008	0.04	108
Model B	±0.002 Ω ±2%	0.000002	0.0005	0.005 0.04	128
Low-power sine wave source and analyzer	±0.3%	0.002†	0.0007	3–30	66
Power oscillator and tuned voltmeter	±2%	0.001	0.005	2	70
Random-noise source spectrum analyzer	±0.04%	0.0003‡	0.0001	3–30	47–73
Welding generator and magnitude and phase nuller	±1%	0.0001	0.00001	10–100	70

*Assuming 10 V peak interference and maximum test current.
†Assuming 2 s integration time.
‡Assuming 25 Hz bandwidth, average of 10 ensembles (23 s per measurement).

14.3 Impedance Phase Discrimination

When measuring station ground impedance, inductive coupling between potential and current leads tends to increase the reading. However, the resistive coupling component (about 59 μΩ-m) is almost independent of lead separation and can be subtracted by calculation. Thus, a meter that responds only to the resistive component can simplify testing, and many ground testers intentionally appear to have this characteristic.

To verify the rejection of reactive impedances, a suitable inductor (e.g., a filter choke) can be connected to the meter and compared with adc ohmmeter check of resistance. As an illustration, one ground tester read 0.43 + *j*5.1 Ω as 0.67 Ω.

Alternatively, for testing current splits in various grounding conductors, an accurate determination of complex phase angle is necessary. Errors can be measured experimentally using several reference impedances, e.g., series resistor-capacitor networks. The following commonly cause limitations in phase accuracy:

1) CT burden is too large, or polarity is reversed.
2) The trigger signal for a sine wave analyzer that samples channels sequentially may contain interference.
3) A power-frequency notch filter contains large phase shifts for slight frequency (or temperature) changes.
4) An oscillograph record may include harmonics and asymmetry, which effect zero crossings.

Copyright © 1992 IEEE All Rights Reserved

Copyright The Institute of Electrical and Electronics Engineers, Inc.
Provided by IHS under license with IEEE
No reproduction or networking permitted without license from IHS Not for Resale

14.4 Current Level

Test currents may range from 5 mA in a ground tester to beyond 1000 A in a staged-fault test. The following effects could be considered in choosing the minimum level:

1) Soil ionization, drying out of soil moisture, and verification of conductor thermal duty probably cannot be simulated with less than full fault levels.
2) Saturation in steel overhead ground wires can increase the conductor GMR by a factor 10 between I and 30 A, thus effecting the shielding efficiency, see [9].
3) Corroded hardware may require 10 V or more to achieve conduction (very evident when using rusty probes and battery clips to make Wennet measurements). See Section 5. regarding nonlinearities.
4) Electrolytic potentials of about i V can be experienced between electrodes of different materials in wet soil.
5) The ratio of test to residual power-frequency current must be consistent with the selectivity of the detector (see 13.2). Below the 1 A test level, increasingly sophisticated filtering is needed.
6) Current transformers lose accuracy at currents less than about 1% of their rating.
7) When using phase conductors to inject test current, the current source must be rated to absorb induced power frequency without damage in any case.

Note that power-frequency zero-sequence current can be useful in mitigating some of these effects. However, high test levels

1) Can be a safety hazard, dry out the soil, or interfere with signal wiring and other utilities
2) Normally require the use of a power circuit and a substantial remote current electrode

Staged-fault tests can often be configured using existing equipment as a source, thus simplifying instrumentation requirements. Continuous tests, for reasons of system regulation and safety, are usually made at current levels below 100 A. This implies the use of different test and power frequencies and some type of frequency-selective signal detector. This method allows

1) Taking multiple readings with one signal channel, which reduces the number of wires required over the site
2) Averaging the detected signal over sufficient time to achieve very good noise rejection
3) Measuring over a broad frequency range
4) Displaying the complex impedance as a digital readout of magnitude and phase (with up to four digit resolution)

Table 3 lists typical test levels for ground testers.

14.5 Test Frequency and Current Waveform

The variety of test current frequencies and waveforms have the following implications to the test results:

1) Staged-fault tests, by their nature, supply a power-frequency sine-wave current with realistic asymmetry and transient level changes.
2) Electronic ground testers commonly use a symmetric square-wave current that can be conveniently regulated. The frequency is often about 90-130 Hz to simplify filtering power-frequency noise, but errors due to the impedance or the current-split frequency dependency can be significant.
3) Hand-cranked ground testers that are mechanically commutated seem to produce steep-front pulses under open-circuit conditions. This may be advantageous for establishing good connections in the presence of corrosion.
4) Random-noise current sources used with spectrum analyzers allow continuing the measurement until sufficient accuracy over a selected bandwidth has been achieved.
5) A sine-wave test current close to the power-system frequency gives a fast (narrowband) reading when interference levels are high.

Copyright © 1992 IEEE All Rights Reserved

Copyright The Institute of Electrical and Electronics Engineers, Inc.
Provided by IHS under license with IEEE
No reproduction or networking permitted without license from IHS Not for Resale

6) Dc testing can have advantages for noise reduction when electrolytic potentials are not present, e.g., in measuring ground-grid continuity.
7) Time domain (impulse) measurements may be more easily associated with systems having distributed parameters, e.g., counterpoise conductors.

Table 3 lists test frequencies for typical grounding system testers.

14.6 Measurement Error Reduction (See [B25])

A common type of measurement error arises from harmonics. Current measurement is much less effected by them than is voltage measurement. The third harmonic voltage seems to be the most significant.

If an instrument measuring the true rms of voltage is used (i.e., $V = \sqrt{V_1^2 + \Sigma V_n^2}$ where V_n is voltage of the *n*th harmonics), a distortion of 30% results in an error of +4.4% in the reading, regardless of the frequency of the harmonics. When the test-current-reversal method (see 8.4.1) is being applied, the effect of harmonics is eliminated by Eqs 13 and 14, provided that true rms meters are employed and the harmonics are steady.

If the common type of universal meter is used, which measures the rectified average of the ac signal but is calibrated with the rms value of a pure sine-wave voltage, a significant error will occur when distorted voltage waveforms are measured. In the case of an ac voltage that includes a single nth harmonic and $Vn < V_1/n$, the voltage error, depending on the phase relationship of the harmonic, will be in the range of $-V_n/n$ to $+V_n/n$. For example, if $V_3 = 0.3\ V_1$, measurement error will be +10%. For amplitudes of harmonics ($V_n > V_1/n$), the error tends to move in the positive direction, by reason of the probability of increase in the extra zeros of the waveform. In conjunction with the test-current-reversal method and average-type voltmeters, this error is only partially reduced.

One method for elimination of the effects of harmonics applicable in all cases involves the use of meters with a filter which passes only the test frequency (see 8.2 and 8.3). The use of an oscilloscope to check the wave forms is recommended.

Interference from solar-induced and other direct currents and voltages that may arise can be avoided if the measuring instruments employed are sensitive to ac alone. The saturating effect of dc on the test transformer can be prevented by the use of a series capacitor in the injection circuit.

15. Bibliography

[B1] IEEE Std 776-1987, IEEE Guide for Inductive Coordination of Electric Supply and Communication Lines (ANSI).

[B2] IEEE Std 789-1988, IEEE Standard Performance Requirements for Communication and Control Cables for Application in High Voltage Environments (ANSI).

[B3] Alderton, J. R., Anderson, P. C., and Cakebread, R. J. “Calculation and Measurement of the Earth Impedance of an EHV Substation,” *Proceedings of the IEE*, vol. 125, no. 12, pp. 1367–1375, Dec. 1978.

[B4] Almeida, M. A., Cherchiglia L. C., and Assumpcao, H. G. “Substation Phase to Ground Short-Circuit Current Distribution,” Paper 36-03, presented at CIGRE International Conference on Large HV Electric Systems, Aug. 29–Sep. 6, 1984.

[B5] Carson, J. R. “Wave Propagation in Overhead Wires with Ground Return,” *Bell System Technical Journal*, vol. 5, pp. 539–554, Jan. 1926.

Copyright © 1992 IEEE All Rights Reserved

Copyright The Institute of Electrical and Electronics Engineers, Inc.
Provided by IHS under license with IEEE
No reproduction or networking permitted without license from IHS Not for Resale

[B6] Cherney, E. A., Ringler, K. G., Kolcio, N., and Bell, G. K "Step and Touch Potentials at Faulted Transmission Towers," *IEEE Transactions on Power Apparatus and Systems*, vol. PAS-100, no. 7, pp. 3312–21, Jul. 1981.

[B7] Conner, E. E., Wentz, E. C., and Allen, D. W. "Methods for Estimating Transient Performance of Practical Current Transformers for Relaying," *IEEE Transactions on Power Apparatus and Systems*, vol. PAS-94, pp. 116–122, Jan./Feb. 1975.

[B8] Dick, E. P. "Model and TS Grounding System Tests," Ontario Hydro Research. Rep 81-4-8K, 1981.

[B9] Dick, E. P., Erven, C. C., and Harvey, S. M. "Grounding System Tests for Analysis of Fault-Induced Voltages on Communication Cables," *IEEE Transactions on Power Apparatus and Systems*. vol. PAS-98, no. 6, pp. 2115–2124, Nov. 1979.

[B10] *Digital Earth Tester DET2*. Megger Instruments Division. Evershed and Vignoles, Ltd.

[B11] Douglas, D. A. "Current Transformer Accuracy with Asymmetric and High Frequency Fault Currents," *IEEE Transactions on Power Apparatus and Systems*, vol. PAS-100, no. 3, pp. 1006–1012, Mar. 1981.

[B12] *Earth Resistance Tester Model 4102*. Kyoritsu Electrical Instruments Works, Ltd.

[B13] Eleck, A. "Providing the Adequacy of Station Grounds," *IEEE Transactions on Communications and Electronics*, pp. 368–76, Nov. 1962.

[B14] Elimination of Noise in Low-Level Circuits," Technical Bulletin, Gould Inc., Instrument Division, Cleveland, OH.

[B15] Fiber Optic Applications in Electric Power Systems," IEEE Tutorial Course, 84 EH0225-3-PWR.

[B16] Fortin, J. "Guide for Measuring Hydro-Quebec's Grounding System Installations," Rep. no. 85102, Master of Applied Science Thesis, Electrical Engineering Department, Ecole Polytechnic, University of Montreal, Montreal, Canada, Dec. 1985.

[B17] Fortin, J., Sarmiento, H. G., and Mukhedkar, D. "Experiences De Mesure Dans Le Domaine Des Installations De Mise A La Terre," presented at CIGRE Symposium 06-85 Bruxelles, Rapport 410-04.

[B18] Fortin, J., Sarmiento, H. G., and Mukhedkar, D. "Field Measurements of Ground Fault Current Distribution and Substation GroundImpedance at LG-2 Quebec," *IEEE Transactions on Power Delivery*, vol. PWRD-1, no. 3, pp. 48–60, Jul. 1986.

[B19] Geer, Jr., E.W. and Whatmough, J.R. "Staged Fault and Laboratory Tests on a Cable Pair Protection System Designed to Serve Power Stations," *IEEE Transactions on Power Apparatus and Systems*, vol. PAS-94, no. 1, pp. 51–57, Jan/Feb. 1975.

[B20] *Geohm 3 — Operating Instructions (in German)*. Gossen Gmbh. Dec. 1981.

[B21] Gillies, D. G. and Rogers, E. J. "Induced Transient Voltage Reduction in Bonneville Power Administration 500 kV Substations," Paper C-72-5222-1, presented at IEEE Summer Power Meeting, San Francisco, CA, Jul. 1972.

[B22] Hughes, M. B., Leonard, R. W., and Martinich, T. G. "Measurement of Power System Subsynchronous Driving Point Impedance and Comparison with Computer Simulations," *IEEE Transactions on Power Apparatus and Systems*, vol. PAS-103, no. 3, pp. 619–630, Mar. 1984.

[B23] Klein, A. G. "Demonstration of Ampere Circuital Law Using a Rogowski Coil," *American Journal of Physics*, vol. 43, no. 4, pp. 368–370, Apr. 1975.

 Copyright © 1992 IEEE All Rights Reserved

Copyright The Institute of Electrical and Electronics Engineers, Inc.
Provided by IHS under license with IEEE
No reproduction or networking permitted without license from IHS Not for Resale

[B24] Kosztaluk, R., Mukhedkar, D., and Gervis, Y. "Field Measurement of Touch and Step Voltages," *IEEE Transactions on Power Apparatus and Systems*, vol PAS-103, pp. 3286–3294, Nov. 1984.

[B25] Kuussaari, M. and Pesohen, A. J. "Earthing Impedance Measurements of Substations," Paper 36-02, presented CIGRE International Conference on Large HV Electric Systems, Aug. 30–Sep. 7, 1978.

[B26] Lu, I. D. and Shier, R. M. "Application of a Digital Signal Analyzer to the Measurement of Power System Ground Impedances," *IEEE Transactions on Power Apparatus and Systems*, vol. PAS-100, no. 4, Apr. 1981.

[B27] Malewski, R. "Elimination of the Skin Effect Error in Heavy-Current Shunts," *IEEE Transactions on Power Apparatus and Systems*, vol. PAS-100, no. 3, p. 1333, Mar. 1981.

[B28] Malewski, R. and Nourse, G. R. "Transient Measurement Techniques in EHV Systems," *IEEE Transactions on Power Apparatus and Systems*, vol. PAS-97, no. 3, pp. 893–901, May/Jun. 1978.

[B29] *Optocouplers and Fiber Optics Applications Handbook*. HPBK-5000 (7/86), Hewlett Packard, Palo Alto, CA.

[B30] Pesonen, A. J. "Effects of Shield Wires on the Potential Rise of H. V. Stations," *Electricity in Finland*, Sahko 53, pp. 305–308, 1980.

[B31] Popovic, L. M. "Potential Distribution Along Electrodes of a High Voltage Installation Grounding System," Paper 87 SM 524-2, presented at IEEE/PES 1987 Summer Meeting, San Francisco, CA, Jul. 12–17, 1987.

[B32] Reynolds, P. H., Ironside, D. S., Silcocks, A. H., and Williams, J. B. "A New Instrument for Measuring Ground Impedances," abstracted *IEEE Transactions on Power Apparatus and Systems*, vol. PAS-98, no. 4, p. 1145, Jul. 1979.

[B33] Rogers, E. J. "Multi-Element Coaxial Shunt," Paper C-74-417-2, presented at IEEE Summer Power Meeting, Anaheim, CA, Jul. 1974.

[B34] Rogers, E. J. and Gillies, D. A. "Shunt Capacitor Switching EMI Voltage, Their Reduction in Bonneville Power Administration Substations," *IEEE Transactions on Power Apparatus and Systems*, vol. PAS-93, no. 6, pp. 1849–60, Nov./Dec. 1974.

[B35] Rudenburg, R. "Fundamental Considerations on Ground Currents," *AIEE Electrical Engineering*. Jan. 1945.

[B36] Russell, B. D. "Measurement and Characterization of Substation Transients," EPRI RP 1359-2, Texas A&M Research Foundation, EPRI Report EL-2982, 1982.

[B37] Sarmiento, H. G., Fortin, J., and Mukhedkar, D. "Substation Ground Impedance: Comparative Field Measurements with High and Low Current Injection Methods," *IEEE Transactions on Power Apparatus and Systems*, vol. PAS-103, no. 7, pp 1677–1683, Jul. 1984.

[B38] Sarmiento, H. G., Mukhedkar, D., and Ramachandran, V. "An Extension to the Study of Earth-Return Mutual Coupling Effects in Ground Impedance Field Measurements," Paper 86 SM 444-4, presented at IEEE PES Summer Meeting, Mexico City, Mexico, Jul. 20–25, 1986.

[B39] Sarmiento, H. G., Velazquez, R., Fortin, J., and Mukhedkar, D. "Survey of Low Ground Electrode Impedance Measurements," *IEEE Transactions on Power Apparatus and Systems*, vol. PAS-102, no. 9, pp. 2842–2849, Sep. 1983.

[B40] Sorbal, S. T., Peixoto, C. A., Fernandes, D., and Mukhedkar, D. "Grounding Measurements at the Itaipu Generating Complex Using the Extended Eleck Method," Paper 86 SM 457-6, presented at IEEE PES Summer Meeting, Mexico City, Mexico, Jul. 20–25, 1986.

Copyright © 1992 IEEE All Rights Reserved

Copyright The Institute of Electrical and Electronics Engineers, Inc.
Provided by IHS under license with IEEE
No reproduction or networking permitted without license from IHS Not for Resale

[B41] Tagg, G. F. Earth *Resistances*. Pittman Publishing Corp, 1964.

[B42] Thapar, B. and Madan, S. K. "Current for Design of Grounding Systems," Paper 84WM147-5, presented at IEEE/PES Winter Meeting, Dallas, Texas, Jan. 29–Feb. 3, 1984.

[B43] "Transient Response of Current Transformers," summary of IEEE Publication 76 CH 1130-4 PWR, *IEEE Transactions on Power Apparatus and Systems*, vol. PAS-96, no. 6, pp. 1809–1814, Nov./Dec. 1977.

[B44] Valjus, J. and Sarmanto, R. "Practical Earthing Measurements of Large Rural and Urban Substations," presented at CIGRE International Conference of HV Electric Systems, Aug. 29–Sep. 6, 1984.

[B45] *Westinghouse Electrical Transmission and Distribution Reference Book*. Westinghouse Electric, 1964.

[B46] Zupa, F. P. and Laidig, J. F. "A Practical Ground Potential Rise Prediction Technique for Power Stations," *IEEE Transactions on Power Apparatus and Systems*, vol. PAS-99, no. 1, pp. 207–216, Jan. 1980.

--`,,`-`-`,,`,,`,`,,`---

Copyright © 1992 IEEE All Rights Reserved

Copyright The Institute of Electrical and Electronics Engineers, Inc.
Provided by IHS under license with IEEE
No reproduction or networking permitted without license from IHS

Not for Resale

Annex A Mutual Impedance Between Horizontal Earth-Return Conductors and the Self Impedance of a Horizontal Earth-Return Conductor Based on the Complex Image Plane Concept (See [11]) (Informative)

(These appendixes are not a part of IEEE Std 81.2.1991, IEEE Guide for Measurement of Impedance and Safety Characteristics of Large, Extended or Interconnected Grounding Systems, but are included for information only.)

The appendixes summarize formulas for the ac mutual impedance between either angled or parallel oriented conductors, the impedance of buried grid tie conductors, and the input impedance of the counterpoise in parallel with overhead ground wires.

Horizontal earth-return current and potential conductors, used to measure grounding-system impedance, can be either two test conductors lying on the ground, one out-of-service transmission line with a test conductor lying on the ground, or two out-of-service transmission lines.

Mutual impedance error, Z_M, described in 7.3, may be calculated with formulas for mutual coupling between earth-return conductors, see [11] and [14]. Formulas for mutual impedance are based on a homogeneous earth, a test conductor height that is very much less than its length, a wave-length that is very large compared with conductor lengths, and test-current frequencies for which capacitive currents to earth can be neglected.

The general formulas for mutual impedance, in which the current conductor is at height h_C and the potential conductor is at height h_P, are in Appendix A. Formulas in Appendix B, which assume both conductors lie on the ground, will approximate mutual impedance for conductor lengths not exceeding the earth's skin depth ($d = 503.292\ \sqrt{\rho / f}$, in m).

The input impedance of a bare, buried conductor terminated by the impedance, Z_{RG}, of a grid is presented in Appendix C. The input impedance of an unterminated conductor can be determined by making Z_{RG} = 100 kΩ in Eq C2. Examples of these two cases for various earth resistivities are shown in Fig C-1.

Appendix D summarizes the formulas for calculating the input impedance of the overhead ground wire (OHGW) paralleled with a counterpoise conductor. Example of a 4/0 counterpoise in parallel with two OHGWs are shown in Fig C1 for tower footing resistances of 10 and 100 Ω.

Nomenclature:

C = length of current conductor, in m

h_C = height of current conductor, in m

P = length of potential conductor (if $\theta > 90°$ change P to $-P$), in m

h_P = height of potential conductor, in m

ρ = earth resistivity, in Ω-m

Y_P = horizontal conductor separation, in m

θ = angle between conductors C and P, $0° < \theta < 180°$

ω = $2\pi f$

f = frequency, in Hz

d = $\sqrt{\frac{10}{2\pi}}\,10^3\sqrt{\frac{\rho}{f}} = 503.292\sqrt{\frac{\rho}{f}}$, in m

j = $\sqrt{-1}$

ln natural logarithm

Copyright © 1992 IEEE All Rights Reserved

Copyright The Institute of Electrical and Electronics Engineers, Inc.
Provided by IHS under license with IEEE
No reproduction or networking permitted without license from IHS Not for Resale

Formulas based on the concept of a conductive plane located a complex distance, $(d/2)(1 - j)$, below the earth surface will require taking the quotient, square root, and logarithm of complex numbers.

In order to determine the mutual impedance components, R_M and X_M, the following complex number algebra will be useful:

$$\sqrt{m + jn} = \sqrt[4]{m^2 + n^2}\left[\cos\frac{v}{2} + j\sin\frac{v}{2}\right]$$

where v is the angle for m and n, in degrees

$$\ln(m + jn) = \ln\sqrt{m^2 + n^2} + jv$$

where v is the angle for m and n, in radians

$$\frac{m + jn}{p + jq} = \left(\frac{\sqrt{m^2 + n^2}}{\sqrt{p^2 + q^2}}\right)[\cos(v - u) + j\sin(v - u)]$$

where

v is the angle for m and n, in degrees

u is the angle for p and q, in degrees

A.1 Mutual Coupling Between Horizontal Parallel Conductors of Finite Lengths

Fig A1 shows the parallel orientation of the current conductor, C, which is at height, h_C, with the potential conductor, P, which is at height, h_P Mutual impedance from C to P, in ohms, is

$$Z_M = R_M + jX_M \tag{A1}$$

$$= j\frac{\omega}{10^7}\left[C\ln\left(\frac{C - P + A}{C - P + B}\cdot\frac{C + D}{C + E}\right) + P\ln\left(\frac{P - C + A}{P - C + B}\cdot\frac{P + G}{P + H}\right)\right.$$

$$\left. - A + B - D + E - G + H + J - K\right]$$

where

$$A = \sqrt{(C - P)^2 + y_P^2 + h_B^2 + 2dh_B - j(2d^2 + 2dh_B)}$$

Copyright © 1992 IEEE All Rights Reserved

Copyright The Institute of Electrical and Electronics Engineers, Inc.
Provided by IHS under license with IEEE
No reproduction or networking permitted without license from IHS Not for Resale

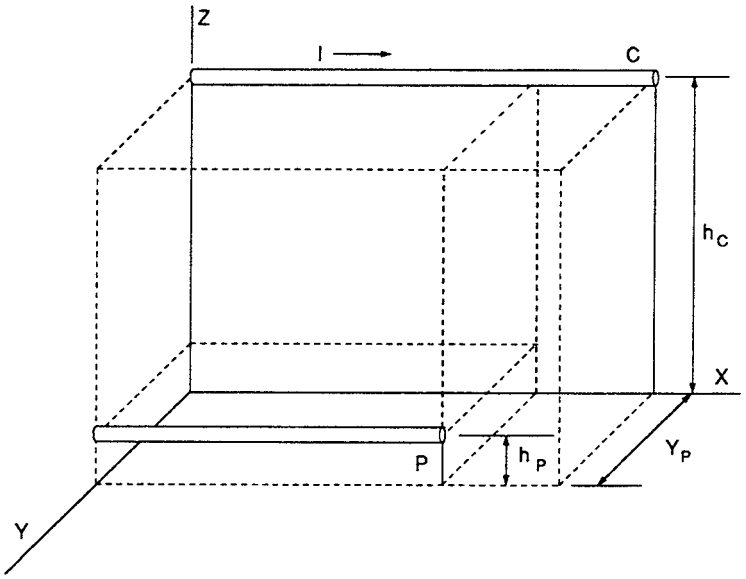

Figure A-1—Parallel Orientation of Current and Potential Conductors

$$B = \sqrt{(C-P)^2 + Y_P^2 + h_A^2}$$

$$D = \sqrt{C^2 + Y_P^2 + h_A^2}$$

$$E = \sqrt{C^2 + Y_P^2 + h_B^2 + 2dh_B - j(2d^2 + 2dh_B)}$$

$$G = \sqrt{P^2 + Y_P^2 + h_A^2}$$

$$H = \sqrt{P^2 + Y_P^2 + h_B^2 + 2dh_B - j(2d^2 + 2dh_B)}$$

$$J = \sqrt{Y_P^2 + h_A^2}$$

$$K = \sqrt{Y_P^2 + h_B^2 + 2dh_B - j(2d^2 + 2dh_B)}$$

$$h_A^2 = (h_C - h_P)^2$$

$$h_b = h_C + h_P$$

$$d = 503.292\sqrt{\frac{\rho}{f}}, \text{ in m}$$

When the potential conductor, *P*, is opposite in direction to the conductor, *C*, and that shown in Fig A1, a negative value for *P* is used in Eq A1.

When the test conductors are lying on the ground, $h_P = h_C = 0$ (approximately) and *A, B, D, E, G, H, J*, and *K* of Eq A1 reduce to

$$A = \sqrt{(C-P)^2 + Y_P^2 - j2d^2}$$

Copyright © 1992 IEEE All Rights Reserved

Copyright The Institute of Electrical and Electronics Engineers, Inc.
Provided by IHS under license with IEEE
No reproduction or networking permitted without license from IHS
Not for Resale

$$B = \sqrt{(C-P)^2 + Y_P^2}$$

$$D = \sqrt{C^2 + Y_P^2}$$

$$E = \sqrt{C^2 + Y_P^2 - j2d^2}$$

$$G = \sqrt{P^2 + Y_P^2}$$

$$H = \sqrt{P^2 + Y_P^2 - j2d^2}$$

$$J = Y_P$$

$$K = \sqrt{Y_P^2 - j2d^2}$$

$$d = 503.292\sqrt{\frac{\rho}{f}}\text{, in m}$$

When the current conductor is very long ($C \gg 2d^2$ and $C \gg P$), Eq A1, in ohms, reduces to

$$Z_M = R_M + jX_M \tag{A2}$$
$$= j\frac{\omega}{10^7}\left[P\ln\left(\frac{P+G}{P+H}\right) - G + H + - J - K\right]$$

where

$$G = \sqrt{P^2 + Y_P^2 + h_A^2}$$

$$H = \sqrt{P^2 + Y_P^2 + h_B^2 + 2dh_B - j(2d^2 + 2dh_B)}$$

$$J = \sqrt{Y_P^2 + h_A^2}$$

$$K = \sqrt{Y_P^2 + h_B^2 + 2dh_B - j(2d^2 + 2dh_B)}$$

$$h_A{}^2 = (h_C - h_P)^2$$

$$h_B = h_C + h_P$$

$$d = 503.292\sqrt{\frac{\rho}{f}}\text{, in m}$$

Mutual impedance components, R_M and X_M, in Ω/km, are calculated for Fig A2 by dividing the components of Eq A2 by the length of the parallel conductors in kilometers. Conductors are spaced 10 m and are lying on the ground with earth resistivities of 1–100 000 Ω-m.

R_M, in Ω/km, decreases with increases in earth resistivity. As parallel length increases, earth resistivity has less of an effect on R_M, and its value approaches a limit which agrees closely with Carson.

The X_M component, in Ω/km, increases in value for either increasing earth resistivity or parallel length. As parallel length increases, the X_M component approaches a value that agrees closely with Carson. At wide spacings (Y_P > 400 m), X_M, for increasing conductor length, falls up to 30% below Carson. As with R_M, different earth resistivities produce smaller changes in X_M.

Copyright © 1992 IEEE All Rights Reserved

Copyright The Institute of Electrical and Electronics Engineers, Inc.
Provided by IHS under license with IEEE
No reproduction or networking permitted without license from IHS Not for Resale

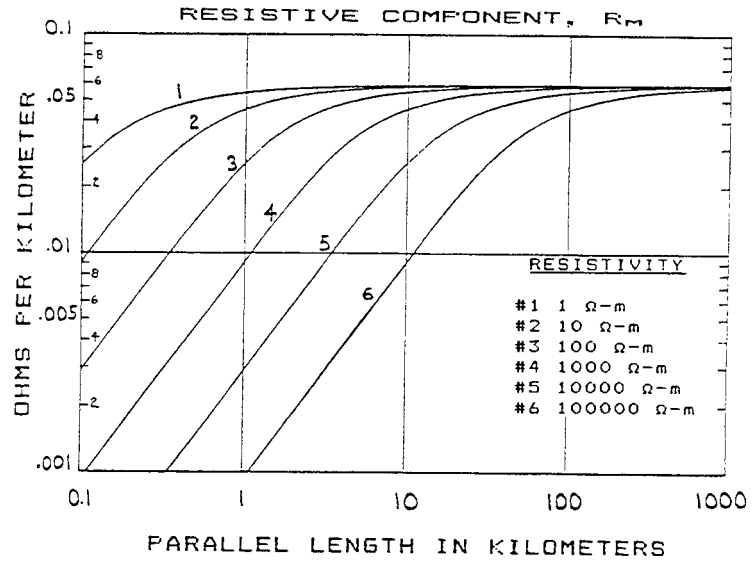

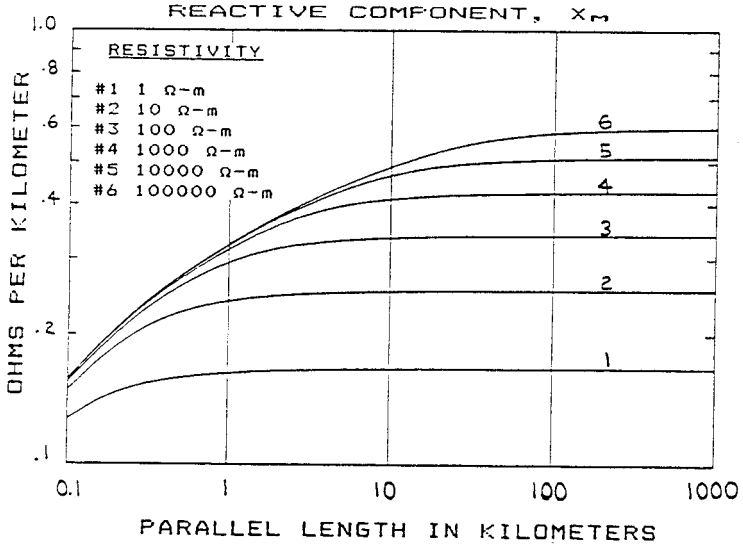

f = 60 Hz, $h_p = h_C = 0$ m, P = C, $Y_P = 10$ m

Figure A-2—Example of Mutual-Impedance Components Between Parallel Conductors

A.2 Mutual Coupling Between Horizontal Angled Conductors of Finite Length

Fig A3 shows an angled orientation between the current conductor, *C*, which is at height, h_C, and the potential conductor, *P*, which is at height, h_P.

Copyright © 1992 IEEE All Rights Reserved

Copyright The Institute of Electrical and Electronics Engineers, Inc.
Provided by IHS under license with IEEE
No reproduction or networking permitted without license from IHS
Not for Resale

Conductor *P*, which is at angle θ with *C*, is modeled in Fig A3 by equal length segments parallel with *C* and spaced at increasing distances from *C*. Mutual impedance, in ohms, is found by summing the mutual impedance from *C* and its image to each parallel segment:

$$Z_M = R_M + jX_M \tag{A3}$$

$$= j\frac{\omega}{10^7}\left\{\sum_{k=1}^{n}\left[C\ln\left(\frac{C-P_{2K}+A_K}{C-P_{2K}+B_K}\cdot\frac{C-P_{1K}+D_K}{C-P_{1K}+E_K}\right)\right.\right.$$

$$+P_{2K}\ln\left(\frac{C-P_{2K}+B_K}{C-P_{2K}+A_K}\cdot\frac{P_{2K}+G_K}{P_{2K}+H_K}\right)$$

$$-P_{1K}\ln\left(\frac{C-P_{1K}+D_K}{C-P_{1K}+E_K}\cdot\frac{P_{1K}+J_K}{P_{1K}+K_K}\right)$$

$$\left.\left.-A_K+B_K-D_K+E_K-G_K+H_K+J_K-K_K\right]\right\}$$

where

n = number of parallel segments approximating P

k = 1, 2, 3, ..., n

$A_K = \sqrt{(C-P_{2K})^2 + Y_K^2 + h_B^2 + 2dh_B - j(2d^2 + 2dh_B)}$

$B_K = \sqrt{(C-P_{2K})^2 + Y_K^2 + h_A^2}$

$D_K = \sqrt{(C-P_{1K})^2 + Y_K^2 + h_A^2}$

$E_K = \sqrt{(C-P_{1K})^2 + Y_K^2 + h_B^2 + 2dh_B - j(2d^2 + 2dh_B)}$

$G_K = \sqrt{P_{2K}^2 + Y_K^2 + h_A^2}$

$H_K = \sqrt{P_{2K}^2 + Y_K^2 + h_B^2 + 2dh_B - j(2d^2 + 2dh_B)}$

$J_K = \sqrt{P_{1K}^2 + Y_K^2 + h_A^2}$

$K_K = \sqrt{P_{1K}^2 + Y_K^2 + h_B^2 + 2dh_B - j(2d^2 + 2dh_B)}$

$h_A^2 = (h_C - h_P)^2$

$h_B = h_C + h_P$

$d = 503.292\sqrt{\frac{\rho}{f}}$, in m

Copyright © 1992 IEEE All Rights Reserved

Copyright The Institute of Electrical and Electronics Engineers, Inc.
Provided by IHS under license with IEEE
No reproduction or networking permitted without license from IHS Not for Resale

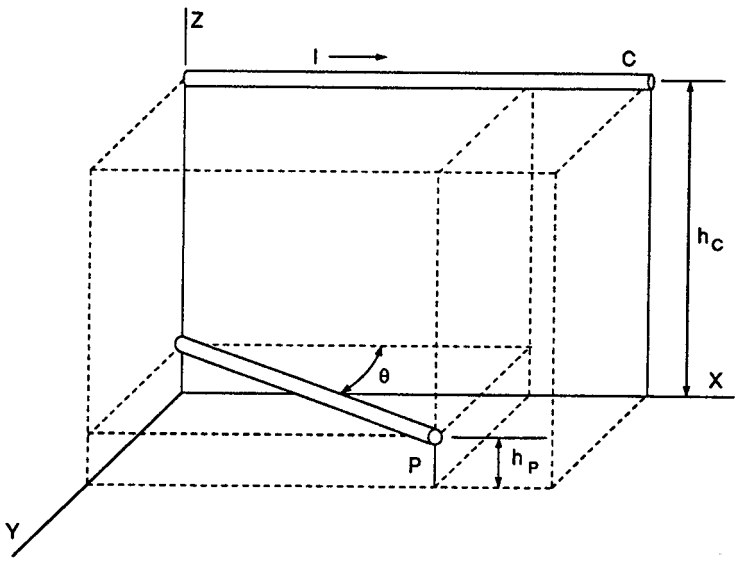

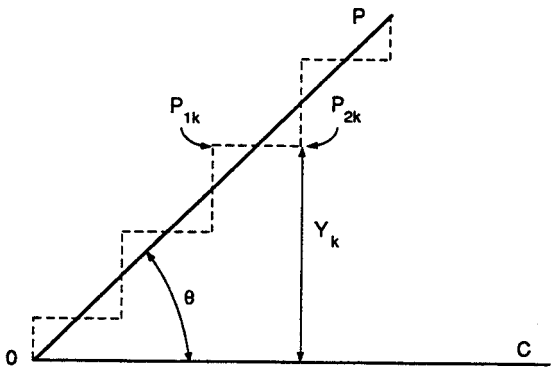

$$P_{1K} = \frac{k-1}{n} P \cos\theta,\ P_{2K} = \frac{k}{n} P \cos\theta,\ Y_K = \frac{2k-1}{2n} P \sin\theta$$

k = 1, 2, 3, ..., n n = NUMBER OF PARALLEL SEGMENTS

Figure A-3—Angled Orientation of Current and Potential Conductors and Modeling Angled Conductors With Parallel Segments

When the test conductors are lying on the ground, $h_P = h_C = 0$ (approximately) and A_K, B_K, D_K, E_K, H_K, J_K, K_K of Eq A3 will reduce to

$$A_K = \sqrt{(C - P_{2K})^2 + Y_K^2 - j2d^2}$$

Copyright © 1992 IEEE All Rights Reserved

Copyright The Institute of Electrical and Electronics Engineers, Inc.
Provided by IHS under license with IEEE
No reproduction or networking permitted without license from IHS Not for Resale

$$B_K = \sqrt{(C - P_{2K})^2 + Y_K^2}$$

$$D_K = \sqrt{(C - P_{1K})^2 + Y_K^2}$$

$$E_K = \sqrt{(C - P_{1K})^2 + Y_K^2 - j2d^2}$$

$$G_K = \sqrt{P_{2K}^2 + Y_K^2}$$

$$H_K = \sqrt{P_{2K}^2 + Y_K^2 - 2jd^2}$$

$$J_K = \sqrt{p_{1K}^2 + Y_K^2}$$

$$K_K = \sqrt{p_{1K}^2 + Y_K^2 - j2d^2}$$

$$d = 503.292\sqrt{\frac{\rho}{f}}\text{, in m}$$

When the current conductor is very long ($C \gg 2d^2$ and $C \gg P$), Eq A3, in ohms, reduces to:

$$Z_M = R_M + jX_M \tag{A4}$$

$$= j\frac{\omega}{10^7}\left\{\sum_{k=1}^{n}\left[P_{2K}\ln\frac{P_{2K}+G_K}{P_{2K}+H_K} - P_{1K}\ln\left(\frac{P_{1K}+J_K}{P_{1K}+H_K}\right) - G_K + H_K + J_K - K_K\right]\right\}$$

where

n = number of parallel segments approximating P

k = 1, 2, 3, ..., n

$$G_K = \sqrt{P_{2K}^2 + Y_K^2 + h_A^2}$$

$$H_K = \sqrt{P_{2K}^2 + Y_K^2 + h_B^2 + 2dh_B - j(2d^2 + 2dh_B)}$$

$$J_K = \sqrt{P_{1K}^2 + Y_K^2 + h_A^2}$$

$$K_K = \sqrt{P_{1K}^2 + Y_K^2 + h_B^2 + 2dh_B - j(2d^2 + 2dh_B)}$$

$$h_A^2 = (h_C - h_P)^2$$

$$h_B = h_C + h_P$$

$$d = 503.292\sqrt{\frac{\rho}{f}}\text{, in m}$$

Mutual coupling between angled conductors is approximated with n equal length segments of P, which are parallel with C (see Fig A3). Depending on angle θ, an n between 10 to 100 will suffice, the larger n being required for angles less than 135° and more than 45° with the X-axis.

Copyright © 1992 IEEE All Rights Reserved

Copyright The Institute of Electrical and Electronics Engineers, Inc.
Provided by IHS under license with IEEE
No reproduction or networking permitted without license from IHS Not for Resale

When $\theta = 0°$ and $h_P \neq h_C$, Eq A.3 will give the same impedance components as Eq A.1 with $Y_P = 0$. Similarly, when $\theta = 180°$, Eq A3 will give the same impedance components as Eq A1 for a negative P and $Y_P = 0$.

As the length of the angled conductors is increased, mutual coupling to the farthest parallel segments decrease, and mutual impedance components, R_M and X_M, approach a limit.

The mutual impedance components shown in Fig A4 are calculated with Eq A3 for 1 km long conductors, oriented at angles of 1° to 180°, and lying on ground with earth resistivities of 1 Ω-m to 100 000 Ω-m. The R_M and X_M components are not sensitive to earth resistivity as large changes in earth resistivity result in only a moderate change in component values.

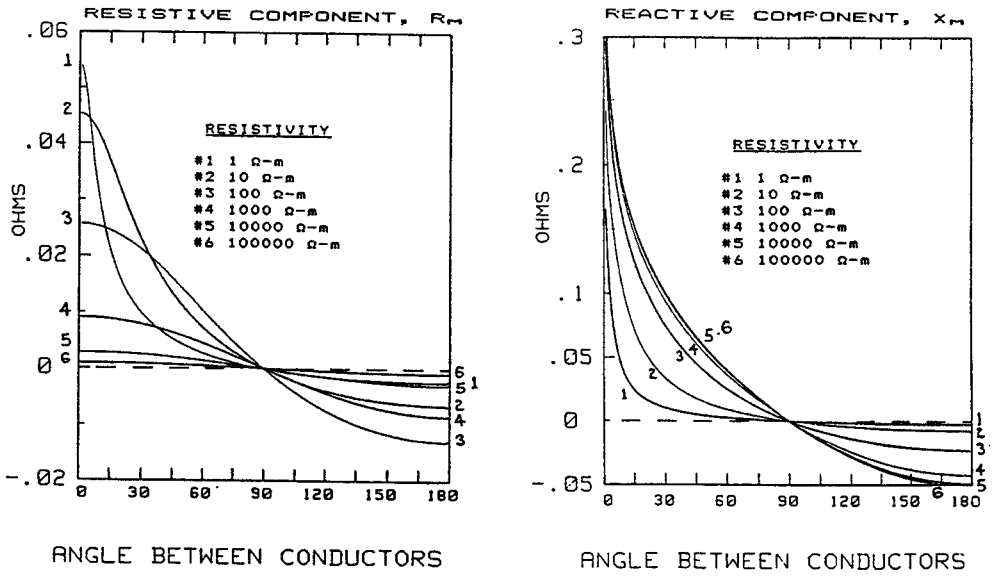

Figure A-4—Example of Mutual Impedance Components Between Angled Conductors

The R_M component decreases as earth resistivity increases for angles less than 90° and is maximum for angles near 0°. In this example, when test lead orientation is between 60° to 180°, the R_M mutual impedance component will be 0.013 Ω or less.

The X_M component increases in value as earth resistivity increases, and is highest near zero degrees. In this example, for test lead angles between 60° and 120°, the reactive component, X_M, will be less than 0.05 Ω. For 100 Ω-m earth, the maximum corrections are 0.02 and –0.015 Ω, respectively.

A.3 Mutual Impedance Between Horizontal Parallel Segments or Angled Segments

The mutual impedance between two horizontal parallel segments, *A–B* and *a–b*, that do not start at the *Y–Z* plane, as in Fig A1, can be calculated by determining distances *O* to *B*, *O* to *A*, *O* to *b*, and *O* to *a* from a reference *Y–Z* plane.

Copyright © 1992 IEEE All Rights Reserved

Copyright The Institute of Electrical and Electronics Engineers, Inc.
Provided by IHS under license with IEEE
No reproduction or networking permitted without license from IHS
Not for Resale

Then, with Eq A1, calculate

Z_{M1}, using distances *O* to *B* for *C* and *O* to *b* for *P*
Z_{M2}, using distances *O* to *B* for *C* and *O* to *a* for *P*
Z_{M3}, using distances *O* to *A* for *C* and *O* to *b* for *P*
Z_{M4}, using distances *O* to *A* for *C* and *O* to *a* for *P*

The mutual impedance between horizontal parallel segments is

$$Z_{MP}(AB, ab) = Z_{M1} - Z_{M2} - Z_{M3} + Z_{M4} \tag{A5}$$

The mutual impedance between two horizontal angled segments, *A–B* and *a–b*, that do not start from a common axis, as in Fig A3, can be calculated by extending each segment radially until they both intersect a common vertical axis. If the radial distances from a reference vertical axis to *B, A, b*, and a are determined, then, with Eq A3, calculate

Z_{M1}, using distances *O* to *B* for *C* and *O* to *b* for *P*
Z_{M2}, using distances *O* to *B* for *C* and *O* to *a* for *P*
Z_{M3}, using distances *O* to *A* for *C* and *O* to *b* for *P*
Z_{M4}, using distances *O* to *A* for *C* and *O* to *a* for *P*

The mutual impedance between horizontal angled segments is

$$Z_{MA}(AB, ab) = Z_{M1} - Z_{M2} - Z_{M3} + Z_{M4} \tag{A6}$$

A.4 Self Impedance of a Finite Length Earth Return Conductor (C >> a)

$$Z_s = R_s + jK_s$$
$$= Cr_c + j\frac{2\omega}{10^7}\left[C\ln\left(\frac{A_s}{a}\frac{2C}{C+DS}\right) - A_s - C + D_s\right] \tag{A7}$$

where

r_C = conductor resistance, in Ω–m

A_S = $2h_C + d - jd$

D_S = $\sqrt{C^2 + 4(h_c^2 + dh_c) - j(2d^2 + 4dh_c)}$

C = grounding conductor length, in m

h_C = height of conductor *C*, in m

d = $503.292\sqrt{\frac{\rho}{f}}$, in m

a = conducter radius, in m, which neglects the internal conductor impedance

= *GMR*, geometric mean radius (see [B45]), in m
(for a round conductor, *GMR* = .7788 · conductor radius, in m)

Copyright © 1992 IEEE All Rights Reserved

Copyright The Institute of Electrical and Electronics Engineers, Inc.
Provided by IHS under license with IEEE
No reproduction or networking permitted without license from IHS Not for Resale

When conductor C is very long ($C \gg 2d$ and $d \gg hC$), Eq A7 reduces to

$$Z_S = R_S + jX_S$$
$$= C\left\{r_c + \frac{9.87}{10^4}f + j\left[\frac{12.57}{10^4}f \ \ln\left(\frac{712\sqrt{\frac{\rho}{f}}}{GMR}\right)\right]\right\} \quad \text{(A8)}$$

where

C = conductor length, in m
r_C = conductor resistance, in Ω-m
ρ = earth resistivity, in Ω-m
f = frequency, in Hz
GMR = conductor geometric mean radius, in m

When r_C is in Ω/km and C is in km, Eq A8 changes to

$$Z_S = C\left\{r_C + \frac{9.87}{10^4}f + j\left[\frac{12.57}{10^4}f \ \ln\left(\frac{712\sqrt{\frac{\rho}{f}}}{GMR}\right)\right]\right\}$$

The self impedance, Z_{S2}, of two horizontal, parallel, and identical earth-return conductors can be determined with the self impedance of one conductor, Z_S (Eqs A7 or A8), the mutual impedance between them, Z_M (Eqs A1 or A2), and $Z_{S2} = (Z_S + Z_M)/2$.

Copyright © 1992 IEEE All Rights Reserved

Copyright The Institute of Electrical and Electronics Engineers, Inc.
Provided by IHS under license with IEEE
No reproduction or networking permitted without license from IHS Not for Resale

Annex B Mutual Impedance Between Finite Length Conductors Lying on the Ground Based on the Campbell/Foster Method (Informative)

Mutual impedance between parallel or angled conductors lying on the earth surface are derived by the Campbell/ Foster Method, see [14]. Depending on earth resistivity and frequency, the limited approximation used in the derivation of the following mutual impedance formulas restrict conductor lengths to less than the skin depth, d, for homogenous earth ($d = 503.292\sqrt{\rho / f}$).

B.1 Mutual Coupling Between Parallel Conductors Lying on the Ground

Fig B1 shows the parallel orientation of the current conductor, *C*, and the potential conductor, *P*. When both are lying on the ground ($h_C = h_p = 0$), the mutual impedance from *C* to *P*, in ohms, is given by Eq B1. For conductor lengths less than the earth skin depth, *d*, Eq B1 and Eq A1 agree for the reactive component, X_M. However, R_M, calculated by Eq B1, is above the resistive component calculated by Eq A1. The latter difference is not serious because the R_M magnitude is small. Eq B1 will have significant error when the conductor length exceeds the earth's skin depth, *d*. Thus, neither R_M nor X_M approach Carson, see [B5], for increasing parallel lengths. Refer to the closure of reference [11] for the infinite series general equation for the Campbell/Foster Method.

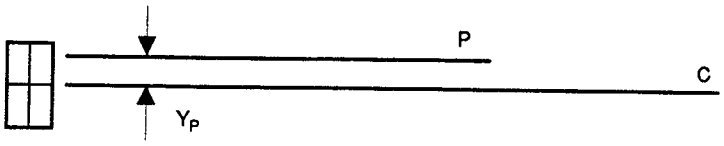

Figure B-1—Parallel Orientation of Current and Potential Conductors

$$Z_M = R_M + jX_M \tag{B-1}$$

$$= \frac{\omega}{10^7}\left[\frac{2}{3}\frac{CP}{d} + j\left(C\ln K_4 + P\ln K_5 + Y_P + K_1 - K_2 - K_3 - \frac{2}{3}\frac{CP}{d}\right)\right]$$

where

$K_1 = \sqrt{(C-P)^2 + Y_P^2}$

$K_2 = \sqrt{C^2 + Y_P^2}$

$K_3 = \sqrt{P^2 + Y_P^2}$

$K_4 = (C + K_2)/(C - P + K_1)$

$K_5 = (P + K_3)/(P - C + K_1)$

$d = 503.292\sqrt{\frac{\rho}{f}}$, in m

$C < d$

$P < d$

Copyright © 1992 IEEE All Rights Reserved

Copyright The Institute of Electrical and Electronics Engineers, Inc.
Provided by IHS under license with IEEE
No reproduction or networking permitted without license from IHS
Not for Resale

Mutual impedance components, R_M and X_M, in Ω/km, are calculated for Fig B2 by dividing the components of Eq B1 by the length of the parallel conductors in kilometers. Conductors are lying on ground with earth resistivities of 1–100 000 Ω-m. Skin depth is .065 km, .205 kin, .65 km, 2.05 km, 6.5 km, and 20.5 km for curves #1 to #6, respectively.

The R_M component, in Ω/km, decreases with increased earth resistivity. Note that, in Fig B2, when the conductor length exceeds the earth's skin depth, d, R_M calculated with Eq B1 will be high and will give erroneous mutual corrections. The R_M of Fig B2 is above the R_M of Fig A2, which approaches Carson (see [B5]) as a limit.

The X_M component, in Ω/km, increases with increased earth resistivity. As conductor length is increased, X_M of Fig B2 agrees closely with Fig A2 up to a conductor length equal to the earth's skin depth. However, as parallel length is increased above the skin depth, X_M, in Ω/ km, diverges from Fig A2 and even goes negative. Thus, the length for which Eq B1 is usable depends on earth resistivity and frequency. Conductor lengths longer than the skin depth will give low reactive component, X_M, corrections.

Copyright © 1992 IEEE All Rights Reserved

Copyright The Institute of Electrical and Electronics Engineers, Inc.
Provided by IHS under license with IEEE
No reproduction or networking permitted without license from IHS Not for Resale

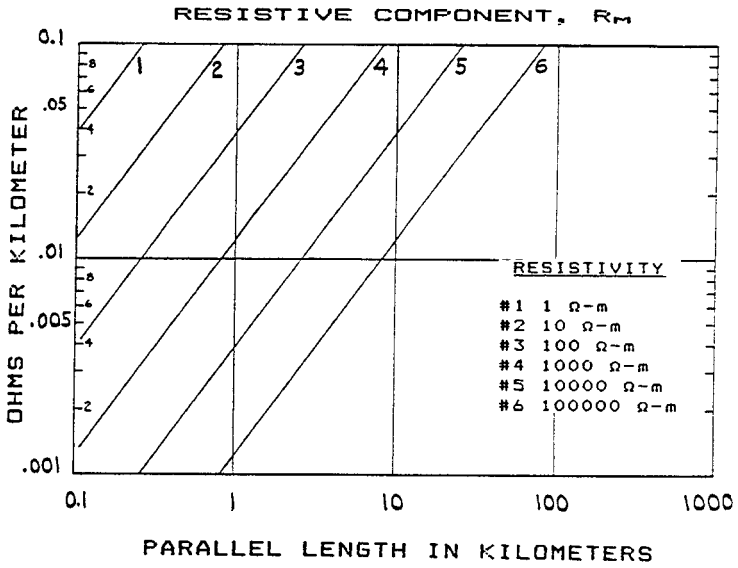

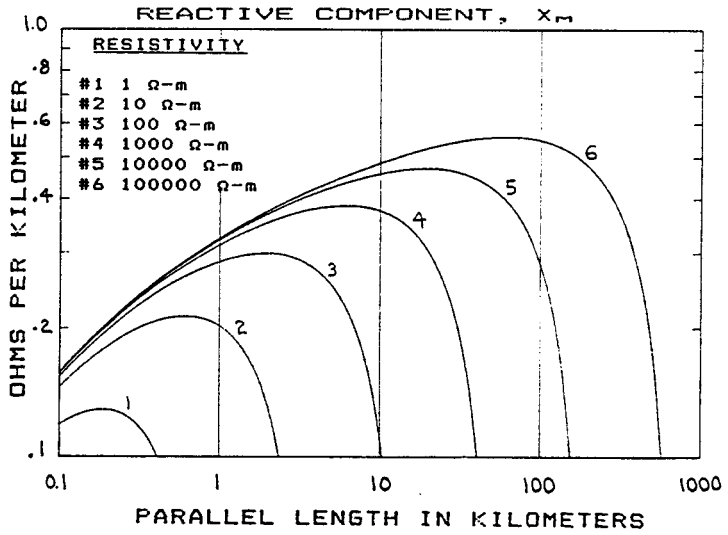

f = 60 Hz, $h_P = h_C = 0$ m, P = C, $Y_P = 10$ m

Figure B-2—Example of Mutual Impedance Components Between Parallel Conductors

Copyright © 1992 IEEE All Rights Reserved

Copyright The Institute of Electrical and Electronics Engineers, Inc.
Provided by IHS under license with IEEE
No reproduction or networking permitted without license from IHS
Not for Resale

B.2 Mutual Coupling Between Angled Conductors Lying on the Ground

Fig B3 shows the angled orientation between the current conductor, *C*, and the potential conductor, *P*. When both are lying on the ground ($h_C = h_p = 0$), the mutual impedance from *C* to *P* is given by Eq B2. For conductor lengths less than the earth skin depth, *d*, the reactive component, X_M, calculated with Eq B2, is accurate. However, because of limitations in the derivations (see [14]), the resistive component, R_M, of the mutual impedance, calculated with Eq B2, is high.

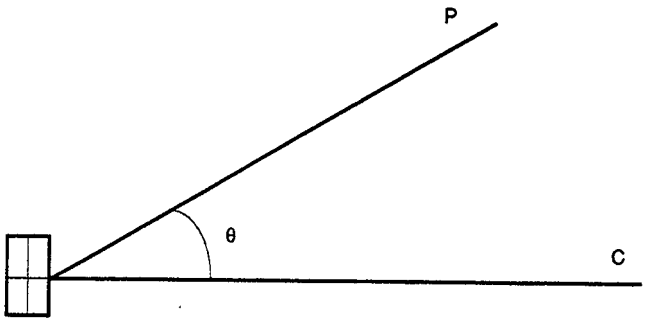

Figure B-3—Angled Orientation of Current and Potential Conductors

$$Z_M = R_M + jX_M \tag{B-2}$$

$$= \frac{\omega}{10^7}\cos\theta\left[\frac{2}{3}\frac{CP}{d} + j\left(C\ln K_7 + P\ln K_8 - \frac{2}{3}\frac{CP}{d}\right)\right]$$

where

$$K_6 = \sqrt{C^2 + P^2 - 2CP\cos\theta}$$

$$K_7 = (P - C\cos\theta + K_6)/[C(1 - \cos\theta]$$

$$K_8 = (C - P\cos\theta + K_6)/[P(1 - \cos\theta)]$$

$$d = 503.292\sqrt{\frac{\rho}{f}}$$

$$C < d$$

$$P < d$$

The mutual impedance components are calculated with Eq B2 for 1 km long conductors that are oriented at angles 1° to 180° and are lying on ground with earth resistivities of 1 to 100 000 Ω-m. Skin depth is .065 km, .205 km, .65 km, 2.05 km, 6.5 km, and 20.5 km for curves #1 to #6, respectively.

Component comparison of Fig B4 with Fig A4 shows overall poor agreement throughout the angle orientations and earth resistivity range. The closest agreement occurs in the 100 to 1000 Ω-m range. As the conductor length in this example is 1 km, curves #1, #2 and #3 of Fig B4 cannot be used to determine mutual impedance and are only examples of errors introduced by Eq B2 for conductor lengths longer than the earth's skin depth. Because of the limited number of terms used in its derivation the resistive component, R_M, calculated with Eq B2 will be high.

Copyright © 1992 IEEE All Rights Reserved

Copyright The Institute of Electrical and Electronics Engineers, Inc.
Provided by IHS under license with IEEE
No reproduction or networking permitted without license from IHS
Not for Resale

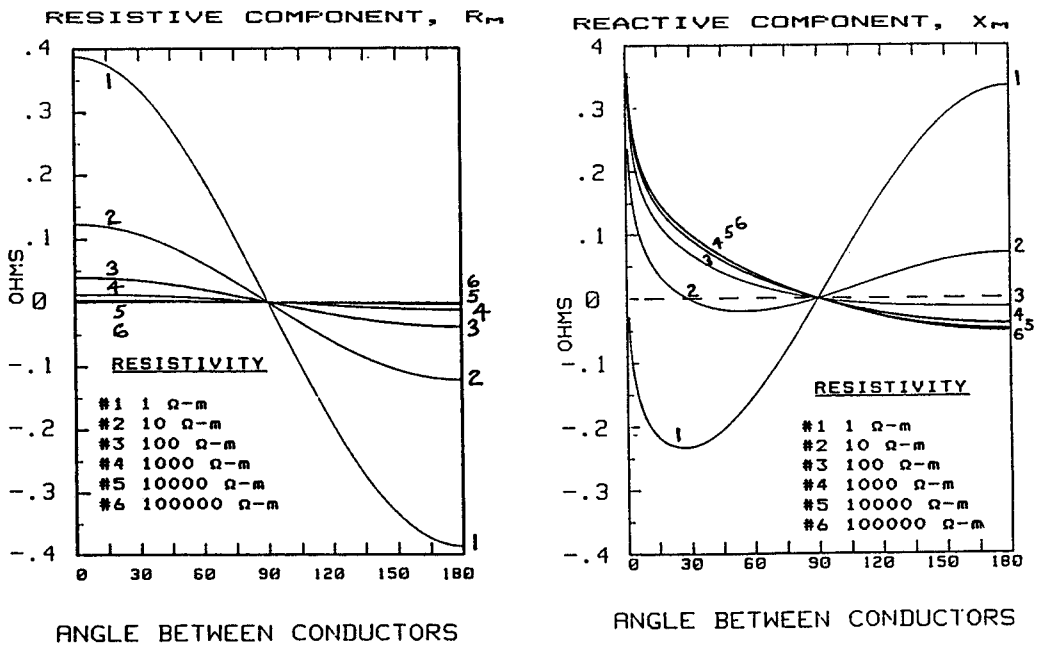

$f = 60$ Hz, $h_P = h_C = 0$ m, $P = C = 1$ km

Figure B-4—Example of Mutual Impedance Components Between Angled Conductors

Copyright © 1992 IEEE All Rights Reserved

Copyright The Institute of Electrical and Electronics Engineers, Inc.
Provided by IHS under license with IEEE
No reproduction or networking permitted without license from IHS
Not for Resale

Annex C Earth Return Impedance of a Grid-Tie Conductor (Informative)

The grid-tie conductor (GTC) is a buried bare conductor that ties a nearby grid to the main grid. The buried conductor acts as a lossy transmission line that is terminated by the impedance of the remote grid. Formulas presented here were derived with the transmission line equations in reference [13].

C.1 Earth Resistance of Buried Conductor (See [B41])

$$R = \frac{\rho}{\pi L}\left(\ln\frac{2L}{\sqrt{hD}} - 1\right) = \frac{\rho}{\pi L}\ln\frac{0.736L}{\sqrt{hD}} \quad \text{(C-1)}$$

where

R = earth resistance, in Ω
ρ = earth resistivity, in Ω-m
L = length of buried GTC, in m
D = conductor diameter, in m
h = depth of conductor, in m

C.2 Impedance of the Grid Tie Conductor

$$Z_{GTC} = \frac{\sqrt{ZR} + \frac{WZR}{Z_{RG}}}{W + \frac{\sqrt{ZR}}{Z_{RG}}} \quad \text{(C-2)}$$

where

Z_{GTC} = input impedance of GTC, in Ω

Z_{RG} = impedance of remote grid, in Ω

Z = total self impedance of buried conductor of length L (use Eq A5 with h_C negative for buried depth), in Ω

R = total earth leakage resistance from Eq , in Ω

$\sqrt{\frac{Z}{R}} = a + jb$

$P = E^{-2a}\cos 2b$

$Q = E^{-2a}\sin 2b$

$W = \frac{1 - P + jQ}{1 + P - jQ} = \frac{1 - E^{-4a} + j2Q}{1 + E^{-4a} + 2P}$

E base of natural logarithm

For short conductors, $Z_{GTC} = [R + (ZR)/Z_{RG}]/[1 + R/Z_{RG}]$ if $Z_{RG} = \infty$, $Z_{GTC} = ZR$

For very long conductors:

$$Z_{GTC} = [\sqrt{ZR} + (ZR)/Z_{RG}]/[1 + \sqrt{ZR}/Z_{RG}] \text{ if } Z_{RG} = \infty, Z_{GTC} = \sqrt{ZR}$$

Copyright © 1992 IEEE All Rights Reserved

Copyright The Institute of Electrical and Electronics Engineers, Inc.
Provided by IHS under license with IEEE
No reproduction or networking permitted without license from IHS Not for Resale

Eq C2 is plotted in Fig C1 for increasing lengths of 4/0 copper buried I m in earth with resistivities of I to 100 000 Ω-m and with and without a terminating grid. In the case where $Z_{RG} = \infty$, the input impedance for short conductors-may be approximated by Eq C1. As the conductor length increases, the input impedance of the buried conductor decreases and approaches a constant impedance as a limit. And at this transition, conductor length no longer contributes to a reduction of input impedance. In lower-resistivity earth, the limiting-impedance effect occurs for shorter conductors. The impedance phase angle increases with conductor length and reaches a maximum of 30–40° at its final impedance.

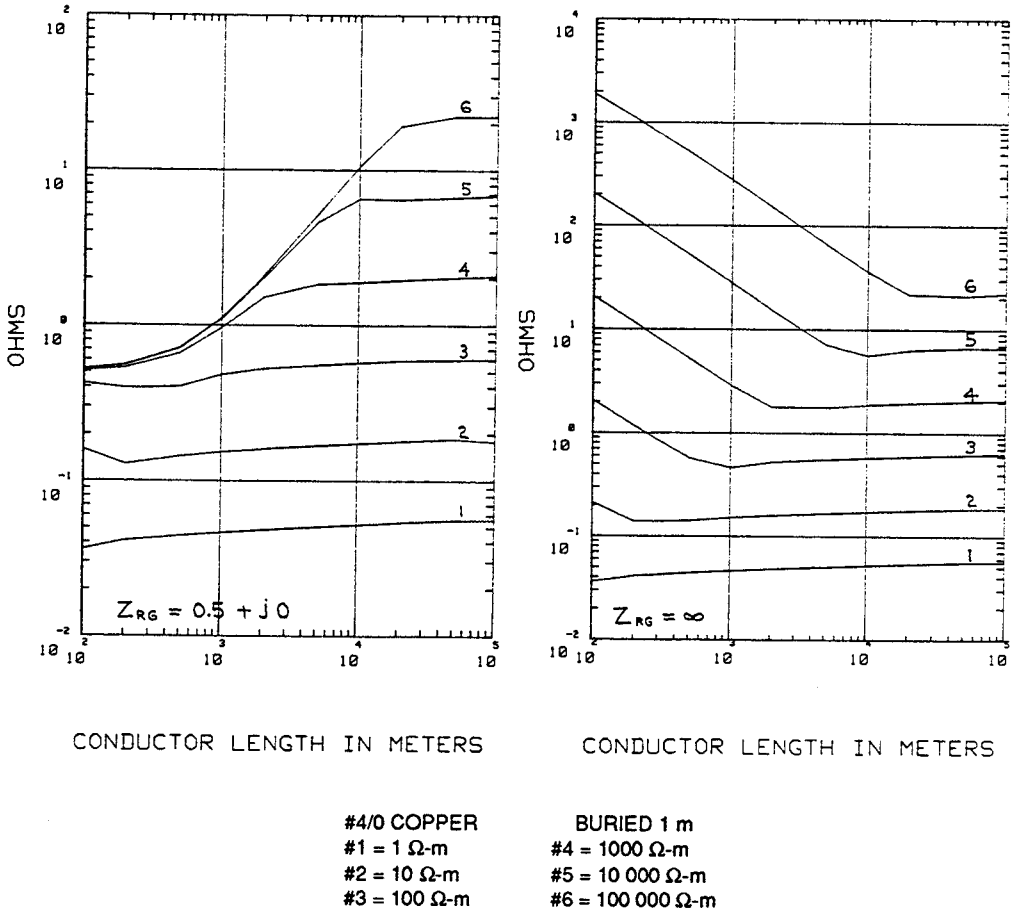

Figure C-1—Example of Buried Conductor With and Without Terminating Grid

When a buried conductor is terminated by a grid, it will only effect the input impedance for the shorter conductor lengths. As the conductor length is increased, the input impedance will approach the limiting impedance value of the buried conductor and the remote grid will no longer contribute to the grounding impedance.

Copyright © 1992 IEEE All Rights Reserved

Copyright The Institute of Electrical and Electronics Engineers, Inc.
Provided by IHS under license with IEEE
No reproduction or networking permitted without license from IHS
Not for Resale

Annex D Parallel Impedance of an Overhead Ground Wire and a Buried Counterpoise Conductor (Informative)

The counterpoise (CP) conductors used to reduce the grounding impedance of towers with high footing resistance act as 1ossy transmission lines. They may connect several towers to the grid; or, in high-resistivity earth, they may extend continuously between grids. In both cases, the CP connects to the grid and towers and is in parallel with the continuous OHGW. The formulas for the parallel impedance of the OHGW and CP were derived with the OHGW-tower footing chain formula of 10.3, the transmission line equations of reference [13], the buried-conductor leakage resistance, (see Eq C1), the average current in the CP, the self impedance formula of Eq A7, and the mutual impedance formulas of Eqs A1 and A5.

The input impedance for any number of CP spans can be calculated with the following formulas. For example, if the input impedance of three spans of CP in parallel with the continuous OHGW is required, Z_{CP1} is calculated with Eqs D1 and D5, Z_{CP2} is calculated with Eqs D2 and D6, and finally, Z_{CP3} is calculated with Eqs D3 and D7. With more CP spans, this procedure continues for each additional span until the kth span.

The input impedance of an OHGW in parallel with a continuous CP can be conveniently calculated with a programmable hand calculator. As the input impedance decreases with more spans towards its characteristic impedance limit, calculations using Eqs D1, D2, D3, and D4 can be terminated after approximately 10–20 spans.

The input impedance of OHGW and One Span of the CP is

$$Z_{CP1} = \frac{BRZZ_W - Z_M^2 S + PZ_L}{M - Z_M T + NZ_L} \quad \text{(D-1)}$$

For two spans of CP, it is

$$Z_{CP2} = \frac{BRZZ_W - Z_M^2 S + PZ_{L1}}{M - Z_M T + NZ_{L1}} \quad \text{(D-2)}$$

For three spans of CP, it is

$$Z_{CP3} = \frac{BRZZ_W - Z_M^2 S + PZ_{L2}}{M - Z_M T + NZ_{L2}} \quad \text{(D-3)}$$

_ _ _ = _ _ _ _ _ _ _ _ _ _ _ _ _ _

k spans of CP, thus

$$Z_{CPk} = \frac{BRZZ_W - Z_M^2 S + PZ_{L(k-1)}}{M - Z_M T + NZ_{L(k-1)}} \quad \text{(D-4)}$$

where

Z_{CPk} = input impedance after k number of spans, in Ω

k = 1,2,3 ....

$M = ARZ_W + BRZ$

$N = BZ_W + B^2 Z - (1 - A)^2 R - 2Z_M B$

$P = M + (Z_M/2)\,[B^2 Z - R(2 + A + A^2) - Z_M B]$

$S = (1 + A)\,R/2$

$T = (1 + 3A)\,R/2$

Copyright © 1992 IEEE All Rights Reserved

Copyright The Institute of Electrical and Electronics Engineers, Inc.
Provided by IHS under license with IEEE
No reproduction or networking permitted without license from IHS
Not for Resale

$$Z_L = (R_T Z_{CH})/(R_T + Z_{CH}) \quad \text{(D-5)}$$

$$Z_{L1} = (R_T Z_{CP1})/(R_T + Z_{CP1}) \quad \text{(D-6)}$$

$$Z_{L2} = (R_T Z_{CP2})/(R_T + Z_{CP2}) \quad \text{(D-7)}$$

_ _=_ _ _ _ _ _ _ _ _ _

$$Z_{L(k-1)} = (R_T Z_{CP(k-1)})/(R_T + Z_{CP(k-1)}) \quad \text{(D-8)}$$

Z_M = mutual impedance between the CP and OHGWs (refer to Eq A1, $P = C$ = span length), in Ω

R = leakage resistance of one CP span of length L (refer to Eq C1), in Ω

Z = self impedance of one CP span of length L (refer to Eq A5, $C = L$ and h_C is negative for buried CP), in Ω

Z_W = $Z_o(gw)$, self impedance of OHGW (Eq A8, C = span length), in Ω

$$A = 1 + \frac{Z/R}{2} + \frac{(Z/R)^2}{24} + \ldots = 1 + \sum_1^n \frac{(Z/R)^n}{(2n)!}$$

$$B = 1 + \frac{Z/R}{6} + \frac{(Z/R)^2}{120} + \ldots = 1 + \sum_1^n \frac{(Z/R)^n}{(2n+1)!}$$

! = factorial

n = 1,2,3 ....
only two terms are required to accurately determine A and B for this application

R_T = tower footing resistance, in Ω

Z_{CH} = input impedance of a very long OHGW-tower footing chain (refer to Eq 37), in Ω

A counterpoise installed in parallel with the OHGW to reduce tower grounding impedance will also contribute to the grounding system. In Fig D1, the input impedance and phase angle, calculated with Eqs D1, D2, D3, and D4, show the effects on input impedance for two different tower-footing resistances and 1–20 spans of CP. The input impedance Fig D1 starts at Z_{CH} calculated with Eq and decreases for each additional CP span. The largest reduction in the input impedance occurs with the first 10 spans. Additional spans make a decreasing contribution to the ground impedance. However, the largest reduction in the input impedance occurs when the tower-footing resistance is reduced from 100 Ω to 10 Ω.

Copyright © 1992 IEEE All Rights Reserved

Copyright The Institute of Electrical and Electronics Engineers, Inc.
Provided by IHS under license with IEEE
No reproduction or networking permitted without license from IHS Not for Resale

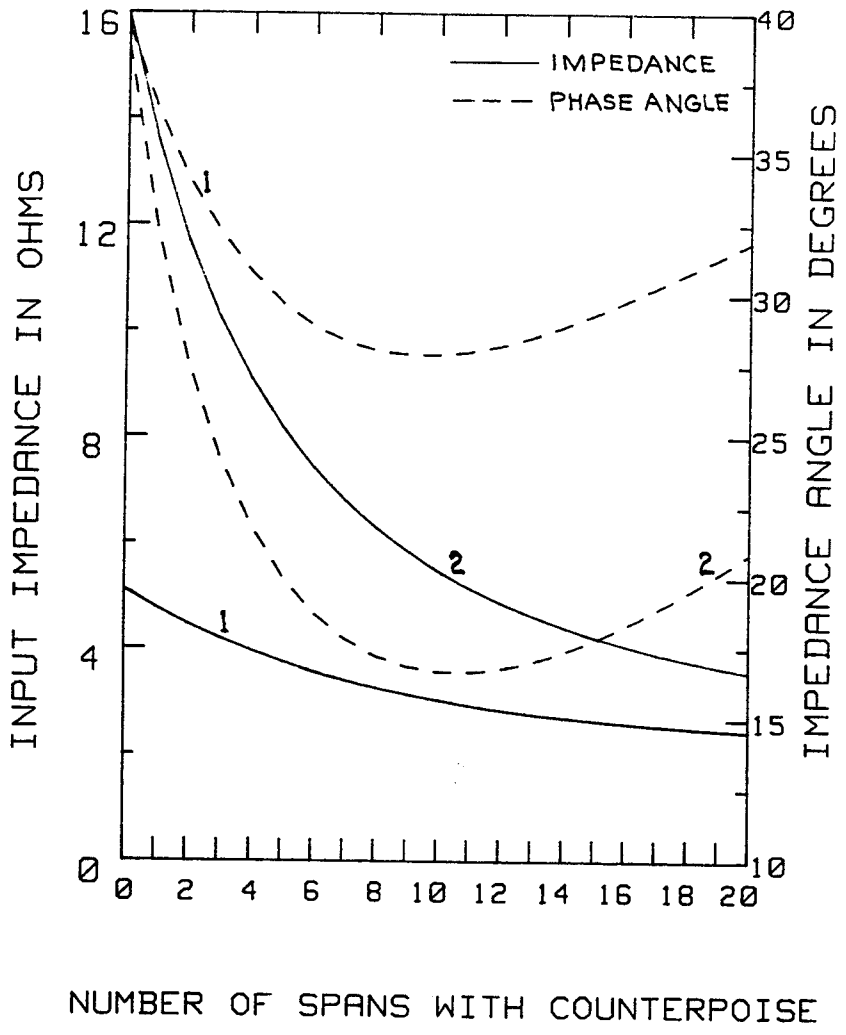

CP = 4/0 COPPER BURIED 1 m
OGHW = 2 EACH 96.7 mm/65.4 mm ACSR
SPACING = 13 m
HEIGHT = 22 m
SPAN = 322 m
f = 60 Hz
#1: R_T = 10 Ω
#2: R_T = 100 Ω
ρ = 10 000 Ω-m

Figure D-1—Input Impedance for a Counterpoise in Parallel With Overhead Ground Wires

Copyright © 1992 IEEE All Rights Reserved

Copyright The Institute of Electrical and Electronics Engineers, Inc.
Provided by IHS under license with IEEE
No reproduction or networking permitted without license from IHS
Not for Resale