805-84 4805702 0019517 0 R-34-01

IEEE Recommended Practice for System Identification in Nuclear Power Plants and Related Facilities

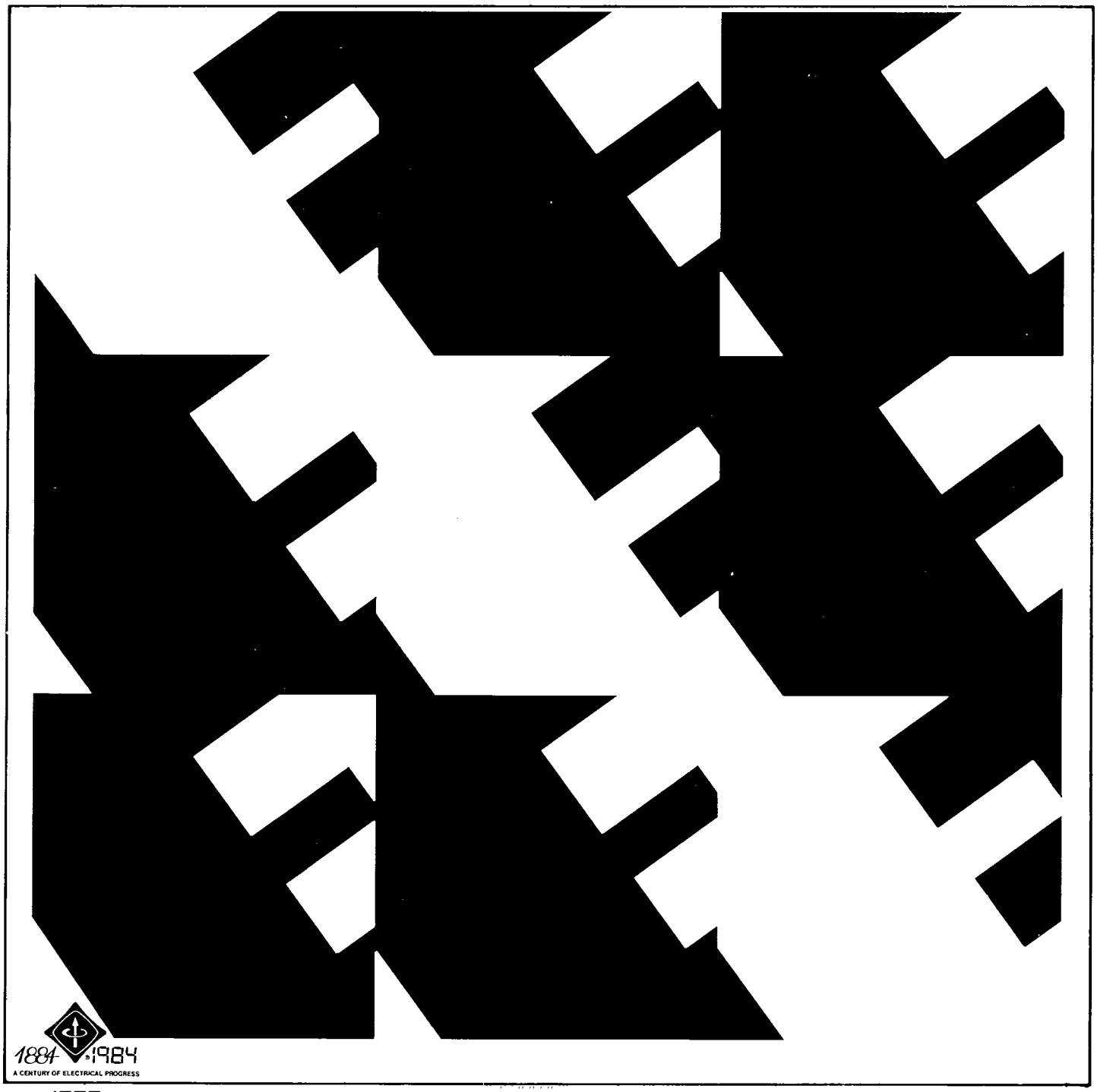

IEEE Std 805-1984

IEEE Published by The Institute of Electrical and Electronics Engineers, Inc 345 East 47th Street, New York, NY 10017, USA

Copyright The Institute of Electrical and Electronics Engineers, Inc.
Provided by IHS under license with IEEE
No reproduction or networking permitted without license from IHS
Not for Resale

March 27, 1984

SH09381

805-84 4805702 0019518 2

IEEE Recommended Practice for System Identification in Nuclear Power Plants and Related Facilities

Sponsor

Power Generation Committee of the
IEEE Power Engineering Society

© Copyright 1984 by

The Institute of Electrical and Electronics Engineers, Inc
345 East 47th Street, New York, NY 10017, USA

No part of this publication may be reproduced in any form,
in an electronic retrieval system or otherwise,
without the prior written permission of the publisher.

Copyright The Institute of Electrical and Electronics Engineers, Inc.
Provided by IHS under license with IEEE
No reproduction or networking permitted without license from IHS

Not for Resale

IEEE Standards documents are developed within the Technical Committees of the IEEE Societies and the Standards Coordinating Committees of the IEEE Standards Board. Members of the committees serve voluntarily and without compensation. They are not necessarily members of the Institute. The standards developed within IEEE represent a consensus of the broad expertise on the subject within the Institute as well as those activities outside of IEEE which have expressed an interest in participating in the development of the standard.

Use of an IEEE Standard is wholly voluntary. The existence of an IEEE Standard does not imply that there are no other ways to produce, test, measure, purchase, market, or provide other goods and services related to the scope of the IEEE Standard. Furthermore, the viewpoint expressed at the time a standard is approved and issued is subject to change brought about through developments in the state of the art and comments received from users of the standard. Every IEEE Standard is subjected to review at least once every five years for revision or reaffirmation. When a document is more than five years old, and has not been reaffirmed, it is reasonable to conclude that its contents, although still of some value, do not wholly reflect the present state of the art. Users are cautioned to check to determine that they have the latest edition of any IEEE Standard.

Comments for revision of IEEE Standards are welcome from any interested party, regardless of membership affiliation with IEEE. Suggestions for changes in documents should be in the form of a proposed change of text, together with appropriate supporting comments.

Interpretations: Occasionally questions may arise regarding the meaning of portions of standards as they relate to specific applications. When the need for interpretations is brought to the attention of IEEE, the Institute will initiate action to prepare appropriate responses. Since IEEE Standards represent a consensus of all concerned interests, it is important to ensure that any interpretation has also received the concurrence of a balance of interests. For this reason IEEE and the members of its technical committees are not able to provide an instant response to interpretation requests except in those cases where the matter has previously received formal consideration.

Comments on standards and requests for interpretations should be addressed to:

Secretary, IEEE Standards Board
345 East 47th Street
New York, NY 10017
USA

Copyright The Institute of Electrical and Electronics Engineers, Inc.
Provided by IHS under license with IEEE
No reproduction or networking permitted without license from IHS
Not for Resale

Foreword

(This Foreword is not a part of IEEE Std 805-1984, IEEE Recommended Practice for System Identification in Nuclear Power Plants and Related Facilities.)

In April 1979, the Working Group on Unique Identification in Power Plants of the Station Design Subcommittee was formed and charged with the task of producing a series of recommended practices for unique identification in power plants. Later, realizing that this concept provided the same benefits to other types of facilities, the title was extended to include *and related facilities.*

This series of recommended practices, entitled the Energy Industry Identification Systems (EIIS), provides a single source of unique identification of systems, structures, and components for all types of power generation and related facilities with provision for the inclusion of currently established plant system identifier codes. Using this series of recommended practices, which includes principles, a table of component function identifier codes, implementation instructions, and system descriptions for the various types of power plants and related facilities, a user can correlate a system, structure, or component with another organization for purposes of reporting, comparison, or general communication. Numerous economic, safety, and convenience benefits can be derived from this concept. IEEE Std 805 deals with system descriptions and system codes for nuclear power plant systems.

The purpose of this working group was to generate an industry-wide language of communication which users could employ at the interface of their organizations and which would not require them to change a viable identification concept which they were using internally. In the event that the users do not have a viable identification concept of their own, they may choose to employ this concept for their internal applications since it has been successfully applied by several utilities and architect/engineering firms.

If conflicts with other standards are discovered, they will be handled in a revision.

This recommended practice was prepared by the Working Group for Unique Identification in Power Plants and Related Facilities, Station Design Subcommittee of the Power Generation Committee.

At the time this recommended practice was approved, the members of the working group were:

J. L. Parris, *Chairman*

O. M. Anderson	P. J. Hoefler	R. W. Rohweder
Alex Barlas	F. H. Hoernschmeyer	C. O. Romine
M. R. Belew	S. Jordan	M. H. Rothstein
V. T. Carlson	J. R. Koupal	P. D. Sierer, Jr
L. T. Gordon	S. Mukho	R. L. Simard
D. T. Hall	R. D. Nalven	G. E. Simoneaux
F. J. Hebdon	D. A. Norman	F. W. Sloat
W. C. Henry	F. M. Patterson	J. G. Staudt

At the time the IEEE Standards Board approved this standard on June 23, 1983 it had the following members:

James H. Beall, *Chairman* **Edward Chelotti,** *Vice Chairman*

Sava I. Sherr, *Secretary*

J. J. Archambault	Donald H. Heirman	John P. Riganati
John T. Boettger	Irvin N. Howell	Frank L. Rose
J. V. Bonucchi	Joseph L. Koepfinger*	Robert W. Seelbach
Rene Castenschiold	Irving Kolodny	Jay A. Stewart
Edward J. Cohen	George Konomos	Clifford O. Swanson
Len S. Corey	R. F. Lawrence	Robert E. Weiler
Donald C. Fleckenstein	John E. May	W. B. Wilkens
Jay Forster	Donald T. Michael*	Charles J. Wylie

*Member emeritus

Copyright The Institute of Electrical and Electronics Engineers, Inc.
Provided by IHS under license with IEEE
No reproduction or networking permitted without license from IHS

Not for Resale

At the time this recommended practice was approved, the members of the Power Generation Committee were:

R. Zwigler, *Chairman* **D. Diamant,** *Vice Chairman*

R. W. Cantrell, *Secretary*

J. C. Appiarius	A. H. Ferber	J. D. Plaxco
W. W. Avril	D. I. Gorden	R. J. Reiman
M. S. Baldwin	R. D. Handel	F. D. Robbins
J. H. Bellack	J. J. Heagerty	D. E. Roberts
I. B. Berezowski	M. E. Jackowski	W. J. Rom
G. Berman	E. F. Kaprielian	Rg Scott
G. C. Boyle	F. E. Keay	J. J. Seibert
F. L. Brennan	P. R. Landrieu	M. N. Sprouse
P. G. Brown	S. Law	A. J. Spurgin
E. F. Chelottti	P. Lewis	R. B. Squires
H. E. Church, Jr	H. E. Lokay	J. V. Stephens
C. H. Clarridge	G. L. Luri	G. I. Stillman
R. S. Coleman	J. T. Madill	J. E. Stoner, Jr
R. E. Cotta	J. D. Mather	V. C. Sulzberger
M. L. Crenshaw	O. S. Mazzoni	S. Tjepkema
R. S. Darke	A. J. McElroy	R. H. Waltman
P. Davidson	T. M. McMahon	E. J. Warchol
A. C. Dolbec	J. L. Mills	M. Warren
G. R. Engman	W. S. Morgan	K. L. West
W. H. Esselman	P. A. Nevins	J. P. Whooley
V. F. Estcourt	S. Nikolokockos	R. F. Willet
T. F. Faulkner	J. T. Nikolas	C. J. Wylie
W. M. Fenner	R. E. Penn	T. D. Younkins

Comments, suggestions, and requests for interpretation may be addressed to:
Secretary
IEEE Standards Board
The Institute of Electrical and Electronic Engineers, Inc.
345 East 47th Street
New York, NY 10017

Copyright The Institute of Electrical and Electronics Engineers, Inc.
Provided by IHS under license with IEEE
No reproduction or networking permitted without license from IHS
Not for Resale

Contents

SECTION PAGE

1. Scope and Purpose 8
2. Discussion 8
3. References 8
4. Conventions 12
5. System Descriptions 17

FIGURES

Fig 1 Legend of Symbols 17
Fig 2 Control Rod Drive System (BWR) — AA 19
Fig 3 Control Rod Drive System (PWR) — AA 21
Fig 4 Reactor Coolant System (PWR) — AB 23
Fig 5 Reactor Recirculation System (BWR) — AD 25
Fig 6 Auxiliary/Emergency Feedwater System (PWR) — BA 27
Fig 7 Containment Combustible Gas Control System — BB 29
Fig 8 Containment Ice Condenser System (PWR) — BC Refrigeration Subsystem 30
Fig 9 Containment Ice Condenser System (PWR) — BC Ice Condenser Subsystem 31
Fig 10 Containment Spray System (PWR) — BE 33
Fig 11 High-Pressure Core Spray System (BWR) — BG 35
Fig 12 Emergency/Standby Gas Treatment System — BH 37
Fig 13 Essential Service Water System — BI 39
Fig 14 High-Pressure Coolant Injection System (BWR) — BJ 40
Fig 15 Containment Fan Cooling System (PWR) — BK 41
Fig 16 Isolation Condenser System (BWR) — BL 42
Fig 17 Low-Pressure Core Spray System (BWR) — BM 43
Fig 18 Reactor Core Isolation Cooling System (BWR) — BN 45
Fig 19 Residual Heat Removal/Low-Pressure Coolant Injection System (BWR) — BO 47
Fig 20 Residual Heat Removal/Low-Pressure Safety Injection System (PWR) — BP 49
Fig 21 High-Pressure Safety Injection System (PWR) — BQ 51
Fig 22 Standby Liquid Control System (BWR) — BR 52
Fig 23 Suppression Pool Makeup System (BWR) — BT 53
Fig 24 Boron Recycle System (PWR) — CA 55
Fig 25 (a) Chemical and Volume Control/Makeup and Purification System (PWR) — CB 57
(b) Chemical and Volume Control/Makeup and Purification System (PWR) — CB 58
Fig 26 Closed/Component Cooling Water System — CC 60
Fig 27 Control Rod Drive Cooling System (PWR) — (CD) 62
Fig 28 Reactor Water Cleanup System (BWR) — CE 63
Fig 29 Suppression Pool Purification System (BWR) — CG 65
Fig 30 Diesel Fuel Oil System — DC 67
Fig 31 Fuel Oil Receiving, Storage, and Transfer System — DE 68
Fig 32 Medium-Voltage Power System — EA System Diagram 71

Copyright The Institute of Electrical and Electronics Engineers, Inc.
Provided by IHS under license with IEEE
No reproduction or networking permitted without license from IHS
Not for Resale

FIGURES PAGE

Fig 33 Medium-Voltage Power System, Class 1E — EB. 72
Fig 34 Low-Voltage Power System — EC Typical 480 V Loads (in Fluid System) 74
Fig 35 Low-Voltage Power System, Class 1E — ED. 75
Fig 36 Instrument and Uninterruptible Power System — EE 76
Fig 37 Instrument and Uninterruptible Power System, Class 1E — EF 77
Fig 38 DC Power Systems — EI 78
Fig 39 DC Power Systems, Class 1E — EJ 79
Fig 40 Emergency Onsite Power Supply System — EK. 80
Fig 41 Main Generator Output Power System — EL. 81
Fig 42 Containment Environmental Monitoring System — IK 89
Fig 43 Condensate Storage and Transfer System — KA 99
Fig 44 Turbine Building Closed Cooling Water System — KB. 100
Fig 45 Demineralized Water Storage and Transfer System — KC 101
Fig 46 Heat Rejection System — KE. 103
Fig 47 Non-Essential Service Water System — KG. 104
Fig 48 Water Filtration System — KH 105
Fig 49 Makeup Demineralizer System — KJ 107
Fig 50 Potable Water Distribution System — KK 108
Fig 51 Sampling and Water Quality System — KN. 111
Fig 52 Gland Seal Water Supply System — KO 112
Fig 53 Fire Protection System (Water) — KF 113
Fig 54 Diesel Generator Starting Air System — LC 115
Fig 55 Service Air System — LF. 117
Fig 56 Nitrogen Supply System — LK 119
Fig 57 Lube Oil Storage and Transfer System — LM 121
Fig 58 Insulating Oil System — LN 123
Fig 59 Auxiliary Steam System — SA 131
Fig 60 Main/Reheat Steam System — SB 133
Fig 61 Condensate System — SD 135
Fig 62 Steam Extraction System — SE. 136
Fig 63 Condensate Demineralizer System — SF 137
Fig 64 Condenser System — SG 138
Fig 65 Condenser Vacuum System — SH 139
Fig 66 Condenser Tube Cleaning System — SI 140
Fig 67 Feedwater System — SJ. 141
Fig 68 Feedwater Pump Injection and Miscellaneous System — SK 142
Fig 69 Feedwater Pump Turbine Lube Oil System — SL 143
Fig 70 LP Heater Drains and Vents System — SM 145
Fig 71 HP Heater and MSR Drains and Vents Systems — SN. 147
Fig 72 Main Turbine System — TA 149
Fig 73 (a) Turbine Steam Seal System — TC 151
(b) Turbine Steam Seal System — TC 152

Copyright The Institute of Electrical and Electronics Engineers, Inc.
Provided by IHS under license with IEEE
No reproduction or networking permitted without license from IHS Not for Resale

FIGURES PAGE

Fig 74 Turbine Lube Oil System — TD 153
Fig 75 Main Turbine Control Fluid System — TG 155
Fig 76 Main Generator Stator Cooling System — TJ 157
Fig 77 Main Generator Hydrogen Cooling System — TK 159
Fig 78 Cask Decontamination System — WA 167
Fig 79 Gaseous Waste Management System (PWR) WE 171
Fig 80 Offgas System (BWR) — WF 173
Fig 81 Sanitary Waste Processing System — WG 174
Fig 82 Wastewater Disposal System — WH 175
Fig 83 Steam Generator Blowdown System (PWR) — WI 176

TABLES

Table 1 EIIS Systems List — Alphabetical by System Code 9
Table 2 EIIS Systems List — Alphabetical by System Title 13
Table 3 Primary Heat Source Systems Group 18
Table 4 Engineered Safety Systems Group 26
Table 5 Reactor Auxiliaries Systems Group 54
Table 6 Fuel Management Systems Group D 64
Table 7 Electrical Power Systems Group 69
Table 8 Electrical Support Systems Group 81
Table 9 Instrumentation and Monitoring Systems Group 85
Table 10 Protection and Control Systems Group 93
Table 11 Water, Chemical, and Drainage Systems Group 97
Table 12 Service Auxiliaries Systems Group 114
Table 13 Site Facility Buildings and Structures Group 125
Table 14 Power Generation Buildings and Structures Group 127
Table 15 Steam Cycle Systems Group 130
Table 16 Power Conversion Systems Group 146
Table 17 Site Facility Environmental Group 160
Table 18 Power Generation Buildings Environmental Control Systems Group 162
Table 19 Waste Management Systems Group 165

Copyright The Institute of Electrical and Electronics Engineers, Inc.
Provided by IHS under license with IEEE
No reproduction or networking permitted without license from IHS
Not for Resale

IEEE Recommended Practice for System Identification in Nuclear Power Plants and Related Facilities

Scope and Purpose

1.1 Scope. This recommended practice provides a single source of nuclear power plant system descriptions which, along with related recommended practices concerning unique identification principles and definitions, component function identifiers, and implementation instructions, makes up a concept for uniquely identifying systems, structures, and components of light water nuclear power plant projects (electric power generating stations) and related facilities. Fossil, hydro, and other types of power plants are not included in this edition.

1.2 Purpose. The purpose of this series of recommended practices is to present a common language of communication which will permit a user to correlate a system, structure, or component with another organization for the purposes of reporting, comparison, or general communication. It does not require a using organization to change its own internal identification concept, but if the organization chooses to do so it has only to transcode at the interface from their internal language to this common language concept.

The user may choose to adopt this concept for internal organizational use. It represents the accumulated practice of the industry assimilated into one set of practices. A significant feature of this concept is that the unique identification code identifies the function at the component level and not the hardware itself.

2. Discussion

The system descriptions concentrate on system function and include such internal details as is necessary to clearly support the system function description. They are not intended to serve as design input. System diagrams also show connections with major interfacing systems, and major components in these interfacing systems, where appropriate to enhance communication of the system function. The system description grouping, as indicated by the first character of the two-alpha-character code, is designed to favor the convenience of plant operation rather than plant design and construction.

The system descriptions and diagrams represent typical systems and are not intended for design purposes. When a system function can be accomplished by significantly different system internal designs, the system description includes a brief identification of major design alternatives to serve as an aid for correlating plant specific system designs with this classification concept. The differences among PWR system nomenclature and system designs were not included in this classification concept because of the functional similarity among the different PWR designs. A single set of system nomenclature and system boundaries has been defined for all PWR designs.

The major differences between PWR and BWR system nomenclature and system internal designs have been preserved in that separate system descriptions and diagrams are provided, where appropriate.

The symbols used in the system diagrams were selected to represent accepted practice as much as possible.

3. References

When the following standards referred to in this recommended practice are superseded by a revision, the latest revision shall apply.

[1] ANSI/IEEE Std 100-1977, IEEE Standard Dictionary of Electrical and Electronics Terms.

[2] IEEE Std 803-1983, IEEE Recommended Practice for Unique Identification in Power Plants and Related Facilities—Principles and Definitions.

[3] IEEE Std 803A-1983, IEEE Recommended Practice for Unique Identification in Power Plants and Related Facilities—Component Function Identifiers.

[4] IEEE Std 804-1983, IEEE Recommended Practice for Unique Identification in Power Plants and Related Facilities—Implementation.

Copyright The Institute of Electrical and Electronics Engineers, Inc.
Provided by IHS under license with IEEE
No reproduction or networking permitted without license from IHS
Not for Resale

Table 1
EIIS Systems List—Alphabetical by System Code

A — Primary Heat Source Systems Group

AA	Control Rod Drive System (BWR)	Fig 2
AA	Control Rod Drive System (PWR)	Fig 3
AB	Reactor Coolant System (PWR)	Fig 4
AC	Reactor Core System	
AD	Reactor Recirculation System (BWR)	Fig 5

B — Engineered Safety Systems Group

BA	Auxiliary/Emergency Feedwater System (PWR)	
BB	Containment Combustible Gas Control System	
BC	Containment Ice Condenser System (PWR) Refrigeration Subsystem	Fig 8
BC	Containment Ice Condenser System (PWR) Ice Condenser Subsystem	Fig 9
BD	Containment Leakage Control System	
BE	Containment Spray System (PWR)	Fig 10
BF	Containment Vacuum Relief System	
BG	High-Pressure Core Spray System (BWR)	Fig 11
BH	Emergency/Standby Gas Treatment System	Fig 12
BI	Essential Service Water System	Fig 13
BJ	High-Pressure Coolant Injection System (BWR)	Fig 14
BK	Containment Fan Cooling System (PWR)	Fig 15
BL	Isolation Condenser System (BWR)	Fig 16
BM	Low Pressure Core Spray System (BWR)	Fig 17
BN	Reactor Core Isolation Cooling System (BWR)	Fig 18
BO	Residual Heat Removal/Low Pressure Coolant Injection System (BWR)	Fig 19
BP	Residual Heat Removal/Low Pressure Safety Injection System (PWR)	Fig 20
BQ	High Pressure Safety Injection System (PWR)	Fig 21
BR	Standby Liquid Control System (BWR)	Fig 22
BS	Ultimate Heat Sink System	
BT	Suppression Pool Makeup System (BWR)	Fig 23

C — Reactor Auxiliaries Systems Group

CA	Boron Recycle System (PWR)	Fig 24
CB	Chemical and Volume Control/Makeup and Purification System (PWR)	Fig 25(a) and (b)
CC	Closed/Component Cooling Water System	Fig 26
CD	Control Rod Drive Cooling System (PWR)	Fig 27
CE	Reactor Water Cleanup System (BWR)	Fig 28
CF	Reactor Services System	
CG	Suppression Pool Purification System (BWR)	Fig 29

D — Fuel Management Systems Group

DA	Fuel Pool Cooling and Purification System	
DB	Nuclear Fuel Services System	
DC	Diesel Fuel Oil System	Fig 30
DE	Fuel Oil Receiving Storage, and Transfer System	Fig 31
DF	Nuclear Fuel Transfer System	

E — Electrical Power Systems Group

EA	Medium-Voltage Power System (601V through 35 kV)	Fig 32
EB	Medium-Voltage Power System—Class 1E	Fig 33
EC	Low-Voltage Power System (600V and less)	Fig 34
ED	Low-Voltage Power System—Class 1E	Fig 35
EE	Instrument and Uninterruptible Power System	Fig 36
EF	Instrument and Uninterruptible Power System—Class 1E	Fig 37
EI	DC Power System	Fig 38
EJ	DC Power System—Class 1E	Fig 39
EK	Emergency Onsite Power Supply System	Fig 40
EL	Main Generator Output Power System	Fig 41

Copyright The Institute of Electrical and Electronics Engineers, Inc.
Provided by IHS under license with IEEE
No reproduction or networking permitted without license from IHS
Not for Resale

Table 1 (*continued*)
EIIS Systems List—Alphabetical by System Code

F — Electrical Support Systems Group

FA	Cable Raceway System
FB	Cathodic Protection System
FC	Grounding and Lightning Protection System
FD	Heat Tracing System
FE	Heat Tracing System—Class 1E
FF	Normal AC Lighting System
FG	Standby AC Lighting System
FH	Emergency DC Lighting System
FI	Communications System
FJ	Station Generation Telemetering System
FK	Switchyard System

I — Instrumentation and Monitoring Systems Group

IA	Security System
IB	Annunciator System
IC	Fire Detection System
ID	Computer System
IG	Incore/Excore Monitoring System
IH	Core Vibration Monitoring System
II	Loose Parts Monitoring System
IJ	Leak Monitoring System
IK	Containment Environmental Monitoring System ..... Fig 42
IL	Radiation Monitoring System
IM	Temperature Monitoring System
IN	Seismic Monitoring System
IO	Performance Monitoring System
IP	Post Accident Monitoring System
IQ	Sequence of Events Monitoring System
IR	Television System
IS	Environmental/Meteorological Monitoring System (Ex PLT)
IT	Main Turbine Instrumentation System
IU	Display Control System
IV	Vibration Monitoring System

J — Protection and Control Systems Group

JA	Integrated Control System
JB	Feedwater/Steam Generator Water Level Control System
JC	Plant Protection System
JD	Reactor Power Control System
JE	Engineered Safety Features Actuation System
JG	Solid State Control System/Auxiliary Logic Control System
JI	Turbine Steam Bypass Control System
JJ	Turbine Supervisory Control System
JK	Feedwater Pump Turbine Instrumentation and Control System
JL	Panels System
JM	Containment Isolation Control System

K — Water, Chemical, and Drainage Systems Group

KA	Condensate Storage and Transfer System ..... Fig 43
KB	Turbine Building Closed Cooling Water System ..... Fig 44
KC	Demineralized Water Storage and Transfer System ..... Fig 45
KD	Condensate and Feedwater Chemistry Control System
KE	Heat Rejection System ..... Fig 46
KF	Heat Rejection Chemical Treatment System
KG	Nonessential Service Water System ..... Fig 47
KH	Water Filtration System ..... Fig 48
KI	Raw Water Makeup System
KJ	Makeup Demineralizer System ..... Fig 49
KK	Potable Water Distribution System ..... Fig 50
KL	Removable Chemical Cleaning System
KM	Chilled Water System
KN	Sampling and Water Quality System ..... Fig 51
KO	Gland Seal Water Supply System ..... Fig 52
KP	Fire Protection System (Water) ..... Fig 53
KQ	Fire Protection System (Chemical)

Copyright The Institute of Electrical and Electronics Engineers, Inc.
Provided by IHS under license with IEEE
No reproduction or networking permitted without license from IHS
Not for Resale

Table 1 (*continued*)
EIIS Systems List—Alphabetical by System Code

L — Service Auxiliaries Systems Group

LA	Diesel Lube Oil System
LB	Diesel Cooling Water System
LC	Diesel Generator Starting Air System ..... Fig 54
LD	Instrument Air Supply System
LE	Essential Air System
LF	Service Air System ..... Fig 55
LG	Welding Gas System
LH	Breathing Air System
LJ	Hydrogen Supply System
LK	Nitrogen Supply System ..... Fig 56
LL	Lube Oil System
LM	Lube Oil Storage and Transfer System ..... Fig 57
LN	Insulating Oil System ..... Fig 58
LP	Laboratory Gas System
LQ	Laboratory Equipment System
LR	Material and Equipment Handling System
LS	Plant Shop System
LT	Record Storage System
LU	Yard Handling and Maintenance System
LV	Plant Hot Water System
LW	Carbon Dioxide (CO_2) Supply System

M — Site Facility Buildings and Structures Group

MA	Administration Building
MB	Industrial/Sanitary Waste Treatment Building
MC	Maintenance and Warehouse Building
MD	Makeup Water Intake Structure
MF	Service Building
MG	Wastewater Outfall Structure
MH	Water Treatment Building
MJ	Visitors Center
MK	Essential Service Water Pump Building

N — Power Generation Buildings and Structures Group

NA	Control Building/Control Complex
NB	Emergency Onsite Power Supply Building
NC	Emergency Operations Facility (Offsite)
ND	Fuel Building
NE	Radwaste Building
NF	Auxiliary Building
NG	Reactor Building (BWR)
NH	Reactor Containment Building
NM	Turbine Building
NN	Circulating Water Structures

S — Steam Cycle Systems Group

SA	Auxiliary Steam System ..... Fig 59
SB	Main/Reheat Steam System ..... Fig 60
SD	Condensate System ..... Fig 61
SE	Steam Extraction System ..... Fig 62
SF	Condensate Demineralizer System ..... Fig 63
SG	Condenser System ..... Fig 64
SH	Condenser Vacuum System ..... Fig 65
SI	Condenser Tube Cleaning System ..... Fig 66
SJ	Feedwater System ..... Fig 67
SK	Feedwater Pump Injection and Miscellaneous System ..... Fig 68
SL	Feedwater Pump Turbine Lube Oil System ..... Fig 69
SM	LP Heater Drains and Vents System ..... Fig 70
SN	HP Heater and MSR Drains and Vents System ..... Fig 71

Copyright The Institute of Electrical and Electronics Engineers, Inc.
Provided by IHS under license with IEEE
No reproduction or networking permitted without license from IHS
Not for Resale

Table 1 (*continued*)
EIIS Systems List—Alphabetical by System Code

T — Power Conversion Systems Group

TA	Main Turbine System	Fig 72
TB	Main Generator System	
TC	Turbine Steam Seal System	Fig 73
TD	Turbine Lube Oil System	Fig 74
TE	Miscellaneous Turbine Vents System	
TF	Turbine Drains and Miscellaneous Piping System	
TG	Main Turbine Control Fluid System	Fig 75
TH	Main Generator Gas Purge System	
TI	Main Generator Seal Oil System	
TJ	Main Generator Stator Cooling System	Fig 76
TK	Main Generator Hydrogen Cooling System	Fig 77
TL	Main Generator Excitation System	

U — Site Facility Environmental Control Systems Group

UA	Pumping Station Environmental Control System
UB	Water Treatment Building Environmental Control System
UC	Service Building Environmental Control System
UD	Administration Building Environmental Control System
UE	Security Building Environmental Control System
UF	Technical Support Center Environmental Control System
UG	Emergency Operations Facility Environmental Control System
UH	Visitors Center Environmental Control System

V — Power Generation Buildings Environmental Control Systems Group

VA	Reactor Building Environmental Control System
VB	Drywell Environmental Control System (BWR)
VC	Shield Annulus Return and Exhaust System
VE	Access Corridors Environmental Control System
VF	Auxiliary Building Environmental Control System
VG	Fuel Building Environmental Control System
VH	Radwaste Building Environmental Control System
VI	Control Building/Control Complex Environmental Control System
VJ	Emergency Onsite Power Supply Building Environmental Control System
VK	Turbine Building Environmental Control System
VL	Plant Exhaust System

W — Waste Management Systems Group

WA	Cask Decontamination System	Fig 78
WB	Solid Waste Management System	
WD	Liquid Waste Management System	
WE	Gaseous Waste Management System (PWR)	Fig 79
WF	Offgas System (BWR)	Fig 80
WG	Sanitary Waste Processing System	Fig 81
WH	Wastewater Disposal System	Fig 82
WI	Steam Generator Blowdown System (PWR)	Fig 83
WJ	Sludge Waste Dewatering System	
WK	Equipment and Floor Drain System	

4. Conventions

The sequence identifier associated with a specific piece of equipment is assigned at the discretion of the organization applying the code. However, if the intent of the recommended practice is to be achieved, there must be uniformity in the assignment of system designators and function identifiers. To achieve this uniformity in the assignment of system identifiers, the following conventions regarding system cognizance should be followed:

(1) *Heat Exchangers.* Heat exchangers are considered to be located in the system in which they perform a heating or cooling function in

Copyright The Institute of Electrical and Electronics Engineers, Inc.
Provided by IHS under license with IEEE
No reproduction or networking permitted without license from IHS
Not for Resale

support of plant power production. Heat exchangers which provide both a heating and cooling function (for example, condensate blowdown cooler) are assigned to the system which, under normal plant conditions, operates at the higher temperature.

(2) *Instruments.* Sensors are assigned to the system in which they sense. Actuators are assigned to the system in which the actuation takes place.

(3) *Circuit Breakers.* Where circuit breakers control specific equipment, the circuit breaker is assigned to the system in which the equipment is assigned. Where circuit breakers control the distribution of electrical power they are assigned to that electrical distribution system.

(4) *Valves.* Valves are assigned to the system in which they control fluid flow.

(5) *Transformers.* Transformers are assigned to the lower voltage system.

Table 2
EIIS Systems List—Alphabetical by System Title

VE	Access Corridors Environmental Control System	
MA	Administration Building	
UD	Administration Building Environmental Control System	
IB	Annunciator System	
NF	Auxiliary Building	
VF	Auxiliary Building Environmental Control System	
BA	Auxiliary/Emergency Feedwater System (PWR)	Fig 6
SA	Auxiliary Steam System	Fig 59
CA	Boron Recycle System (PWR)	Fig 24
LH	Breathing Air System	
FA	Cable Raceway System	
LW	Carbon Dioxide (CO_2) Supply System	
WA	Cask Decontamination System	Fig 78
FB	Cathodic Protection System	
CB	Chemical and Volume Control/Makeup and Purification System (PWR)	Fig 25(a) and (b)
KM	Chilled Water System	
NN	Circulating Water Structures	
CC	Closed/Component Cooling Water System	Fig 26
FI	Communications System	
ID	Computer System	
KD	Condensate and Feedwater Chemistry Control System	
SF	Condensate Demineralizer System	Fig 63
KA	Condensate Storage and Transfer System	Fig 43
SD	Condensate System	Fig 61
SG	Condenser System	Fig 64
SI	Condenser Tube Cleaning System	Fig 66
SH	Condenser Vacuum System	Fig 65
BB	Containment Combustible Gas Control System	Fig 7
IK	Containment Environmental Monitoring System	Fig 42
BK	Containment Fan Cooling System (PWR)	Fig 15
BC	Containment Ice Condenser System (PWR) Refrigeration System	Fig 8
BC	Containment Ice Condenser System (PWR) Ice Condenser Subsystem	Fig 9
JM	Containment Isolation Control System	
BD	Containment Leakage Control System	
BE	Containment Spray System (PWR)	Fig 10
BF	Containment Vacuum Relief System	
NA	Control Building/Control Complex	
VI	Control Building/Control Complex Environmental Control System	
CD	Control Rod Drive Cooling System (PWR)	Fig 27
AA	Control Rod Drive System (BWR)	Fig 2
AA	Control Rod Drive System (PWR)	Fig 3
IH	Core Vibration Monitoring System	
EI	DC Power System	Fig 38
EJ	DC Power System—Class 1E	Fig 39
KC	Demineralized Water Storage and Transfer System	Fig 45
LB	Diesel Cooling Water System	
DC	Diesel Fuel Oil System	Fig 30
LC	Diesel Generator Starting Air System	Fig 54
LA	Diesel Lube Oil System	
IU	Display Control System (DCS)	
VB	Drywell Environmental Control System (BWR)	

Copyright The Institute of Electrical and Electronics Engineers, Inc.
Provided by IHS under license with IEEE
No reproduction or networking permitted without license from IHS
Not for Resale

Table 2 (*continued*)
EIIS Systems List—Alphabetical by System Title

FH	Emergency DC Lighting System	
NB	Emergency Onsite Power Supply Building	
VJ	Emergency Onsite Power Supply Building Environmental Control System	
EK	Emergency Onsite Power Supply System	Fig 40
UG	Emergency Operations Facility Environmental Control System	
NC	Emergency Operations Facility (Offsite)	
BH	Emergency/Standby Gas Treatment System	Fig 12
JE	Engineered Safety Features Actuation System	
IS	Environmental/Meteorological Monitoring System (Ex PLT)	
WK	Equipment and Floor Drain System	
LE	Essential Air System	
MK	Essential Service Water Pump Building	
BI	Essential Service Water System	Fig 13
SK	Feedwater Pump Injection and Miscellaneous System	Fig 68
JK	Feedwater Pump Turbine Instrumentation and Control System	
SL	Feedwater Pump Turbine Lube Oil System	Fig 69
JB	Feedwater/Steam Generator Water Level Control System	
SJ	Feedwater System	Fig 67
IC	Fire Detection System	
KQ	Fire Protection System (Chemical)	
KP	Fire Protection System (Water)	Fig 53
ND	Fuel Building	
VG	Fuel Building Environmental Control System	
DE	Fuel Oil Receiving, Storage, and Transfer System	Fig 31
DA	Fuel Pool Cooling and Purification System	
WE	Gaseous Waste Management System (PWR)	Fig 79
KO	Gland Seal Water Supply System	Fig 52
FC	Grounding and Lightning Protection System	
SN	HP Heater and MSR Drains and Vents System	Fig 71
KF	Heat Rejection Chemical Treatment System	Fig 47
KE	Heat Rejection System	Fig 46
FD	Heat Tracing System	
FE	Heat Tracing System—Class 1E	
BJ	High Pressure Coolant Injection System (BWR)	Fig 14
BG	High Pressure Core Spray System (BWR)	Fig 11
BQ	High Pressure Safety Injection System (PWR)	Fig 21
LJ	Hydrogen Supply System	
IG	Incore/Excore Monitoring System	
MB	Industrial/Sanitary Waste Treatment Building	
LD	Instrument Air Supply System	
EE	Instrument and Uninterruptible Power System	Fig 36
EF	Instrument and Uninterruptible Power System—Class 1E	Fig 37
LN	Insulating Oil System	Fig 58
JA	Integrated Control System	
BL	Isolation Condenser System (BWR)	Fig 16
SM	LP Heater Drains and Vents System	Fig 70
LQ	Laboratory Equipment System	
LP	Laboratory Gas System	
LJ	Leak Monitoring System	
WD	Liquid Waste Management System	
II	Loose Parts Monitoring System	
BM	Low Pressure Core Spray System (BWR)	Fig 17
EC	Low-Voltage Power System (600 V and less)	Fig 34
ED	Low-Voltage Power System—Class 1E	Fig 35
LM	Lube Oil Storage and Transfer System	Fig 57
LL	Lube Oil System	
TL	Main Generator Excitation System	
TH	Main Generator Gas Purge System	
TK	Main Generator Hydrogen Cooling System	Fig 77
EL	Main Generator Output Power System	Fig 41
TI	Main Generator Seal Oil System	
TJ	Main Generator Stator Cooling System	Fig 76
TB	Main Generator System	
SB	Main/Reheat Steam System	Fig 60
TG	Main Turbine Control Fluid System	Fig 75
IT	Main Turbine Instrumentation System	

Copyright The Institute of Electrical and Electronics Engineers, Inc.
Provided by IHS under license with IEEE
No reproduction or networking permitted without license from IHS
Not for Resale

Table 2 (*continued*)
EIIS Systems List—Alphabetical by System Title

TA	Main Turbine System	Fig 72
MC	Maintenance and Warehouse Building	
KJ	Makeup Demineralizer System	Fig 49
MD	Makeup Water Intake Structure	
LR	Material and Equipment Handling System	
EA	Medium-Voltage Power System (601 V through 35 kV)	Fig 32
EB	Medium-Voltage Power System—Class 1E	Fig 33
TE	Miscellaneous Turbine Vents System	
LK	Nitrogen Supply System	Fig 56
KG	Nonessential Service Water System	
FF	Normal AC Lighting System	
DB	Nuclear Fuel Services System	
DF	Nuclear Fuel Transfer System	
WF	Offgas System (BWR)	Fig 80
JL	Panels System	
IO	Performance Monitoring System	
VL	Plant Exhaust System	
LV	Plant Hot Water System	
JC	Plant Protection System	
LS	Plant Shop System	
IP	Post Accident Monitoring System	
KK	Potable Water Distribution System	Fig 50
UA	Pumping Station Environmental Control System	
IL	Radiation Monitoring System	
NE	Radwaste Building	
VH	Radwaste Building Environmental Control System	
KI	Raw Water Makeup System	
NG	Reactor Building (BWR)	
VA	Reactor Building Environmental Control System	
NH	Reactor Containment Building	
AB	Reactor Coolant System (PWR)	Fig 4
BN	Reactor Core Isolation Cooling System (BWR)	Fig 18
AC	Reactor Core System	
JD	Reactor Power Control System	
AD	Reactor Recirculation System (BWR)	Fig 5
CF	Reactor Services System	
CE	Reactor Water Cleanup System (BWR)	Fig 28
LT	Record Storage System	
KL	Removable Chemical Cleaning System	
BO	Residual Heat Removal/Low Pressure Coolant Injection System (BWR)	Fig 19
BP	Residual Heat Removal/Low Pressure Safety Injection System (PWR)	Fig 20
KN	Sampling and Water Quality System	Fig 51
WG	Sanitary Waste Processing System	Fig 81
UE	Security Building Environmental Control System	
IA	Security System	
IN	Seismic Monitoring System	
IQ	Sequence of Events Monitoring System	
LF	Service Air System	Fig 55
MF	Service Building	
UC	Service Building Environmental Control System	
VC	Shield Annulus Return and Exhaust System	
WJ	Sludge Waste Dewatering System	
JG	Solid State Control System/Auxiliary Logic Control System	
WB	Solid Waste Management System	
FG	Standby AC Lighting System	
BR	Standby Liquid Control System (BWR)	Fig 22
FJ	Station Generation Telemetering System	
SE	Steam Extraction System	Fig 62
WI	Steam Generator Blowdown System (PWR)	Fig 83
BT	Suppression Pool Makeup System (BWR)	Fig 23
CG	Suppression Pool Purification System (BWR)	Fig 29
FK	Switchyard System	
UF	Technical Support Center Environmental Control System	
IR	Television System	
IM	Temperature Monitoring System	
NM	Turbine Building	
KB	Turbine Building Closed Cooling Water System	Fig 44

Copyright The Institute of Electrical and Electronics Engineers, Inc.
Provided by IHS under license with IEEE
No reproduction or networking permitted without license from IHS
Not for Resale

Table 2 (*continued*)
EIIS Systems List—Alphabetical by System Title

VK	Turbine Building Environmental Control System	
TF	Turbine Drains and Miscellaneous Piping System	
TD	Turbine Lube Oil System	Fig 74
JI	Turbine Steam Bypass Control System	
TC	Turbine Steam Seal System	Fig 73(a) and (b)
JJ	Turbine Supervisory Control System	
BS	Ultimate Heat Sink System	
IV	Vibration Monitoring System	
MJ	Visitors Center	
UH	Visitors Center Environmental Control System	
WH	Wastewater Disposal System	Fig 82
MG	Wastewater Outfall Structure	
KH	Water Filtration System	Fig 48
MH	Water Treatment Building	
UB	Water Treatment Building Environmental Control System	
LG	Welding Gas System	
LU	Yard Handling and Maintenance System	

Copyright The Institute of Electrical and Electronics Engineers, Inc.
Provided by IHS under license with IEEE
No reproduction or networking permitted without license from IHS
Not for Resale

5. System Descriptions

The narrative descriptions of systems are, in some cases, supplemented by diagrams which serve as an aid to understanding. The diagrams are intended to be generic in nature and show only sufficient detail to reinforce the text. Wherever possible, all pressurized water reactor system diagrams are combined into one drawing.

Fig 1
Legend of Symbols

NOTES: Symbols listed here are to be used for drawing clarification only. Other components may be reportable above those indicated here dependent on plant design.

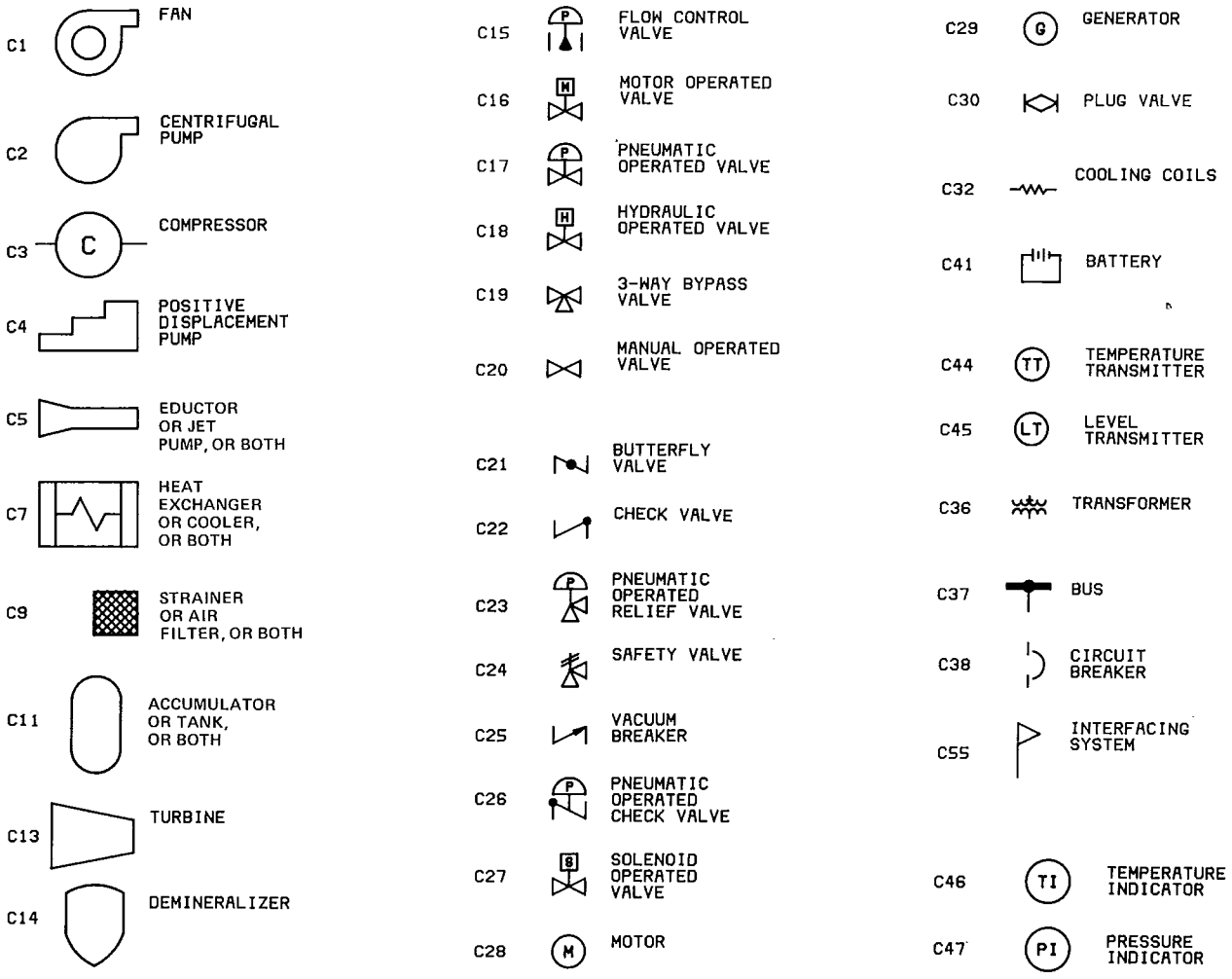

Copyright The Institute of Electrical and Electronics Engineers, Inc.
Provided by IHS under license with IEEE
No reproduction or networking permitted without license from IHS

Not for Resale

5.1 Primary Heat Source Systems Group

Table 3

	Primary Heat Source Systems Group	Plant Type	Revision
AA	Control Rod Drive System	B P	
AB	Reactor Coolant System (PWR)	P	
AC	Reactor Core System	B P	
AD	Reactor Recirculation System (BWR)	B	

B—BWR P—PWR

5.2 Control Rod Drive System (BWR)—AA

5.2.1 System Function. The Control Rod Drive System (BWR) provides the means to insert and retract control rods within the nuclear reactor core.

5.2.2 System Description. The Control Rod Drive System (BWR) consists of the control rods, control rod drive mechanisms, a hydraulic control unit for each control rod drive mechanism, their common hydraulic power supply, scram discharge volume piping, manual controls and interlocks for manipulating the control rods, and control rod position indication.

Each control rod drive mechanism is a double-acting, mechanically latched, hydraulic cylinder using water from the hydraulic power supply as the operating fluid. This water also cools the drive mechanisms and their seals. The hydraulic control units each contain all the hydraulic, pneumatic, electrical equipment, and controls necessary to actuate one control rod drive mechanism. Directional control valves are used to actuate normal rod insertion and withdrawal. Scram valves and a scram accumulator are provided for emergency rod insertion (scram). The scram valves are actuated by a scram signal from the reactor protection system. During a scram, water is discharged from the control rod drive mechanism into the discharge header. The hydraulic power supply to the hydraulic control units consists of two control rod drive system pumps, filters, and pressure regulating valves. The control rod drive system pumps receive water from the condensate storage tank in the condensate storage and transfer system. Control rod drive pump cooling is provided by the closed/component cooling water system. Manual controls, interlocks, and displays are provided in the main control room for the operator to manipulate control rods, and monitor control rod position and control rod drive system equipment status.

5.2.3 Mode of Operation. The control rod drive system (BWR) operates during normal reactor operation and in the event of an emergency reactor shutdown (scram).

5.2.4 Major Interfacing Systems

Condensate Storage and Transfer System	KA
Reactor Recirculation System (BWR)	AD
Plant Protection System	JC
Closed/Component Cooling Water System	CC
Medium Voltage Power System	EA
Integrated Control System	JA
Reactor Core System	AC

5.3.6 Major Equipment

Control Rod Drive Pumps
Pressure Regulating Valves
Drive Water Filters
Hydraulic Control Units
Control Rod Drive Mechanisms
Scram Discharge Volume
Control Rod Manual Controls, Interlocks, and Instrumentation
Control Rods
Control Rod Position Indication

Copyright The Institute of Electrical and Electronics Engineers, Inc.
Provided by IHS under license with IEEE
No reproduction or networking permitted without license from IHS
Not for Resale

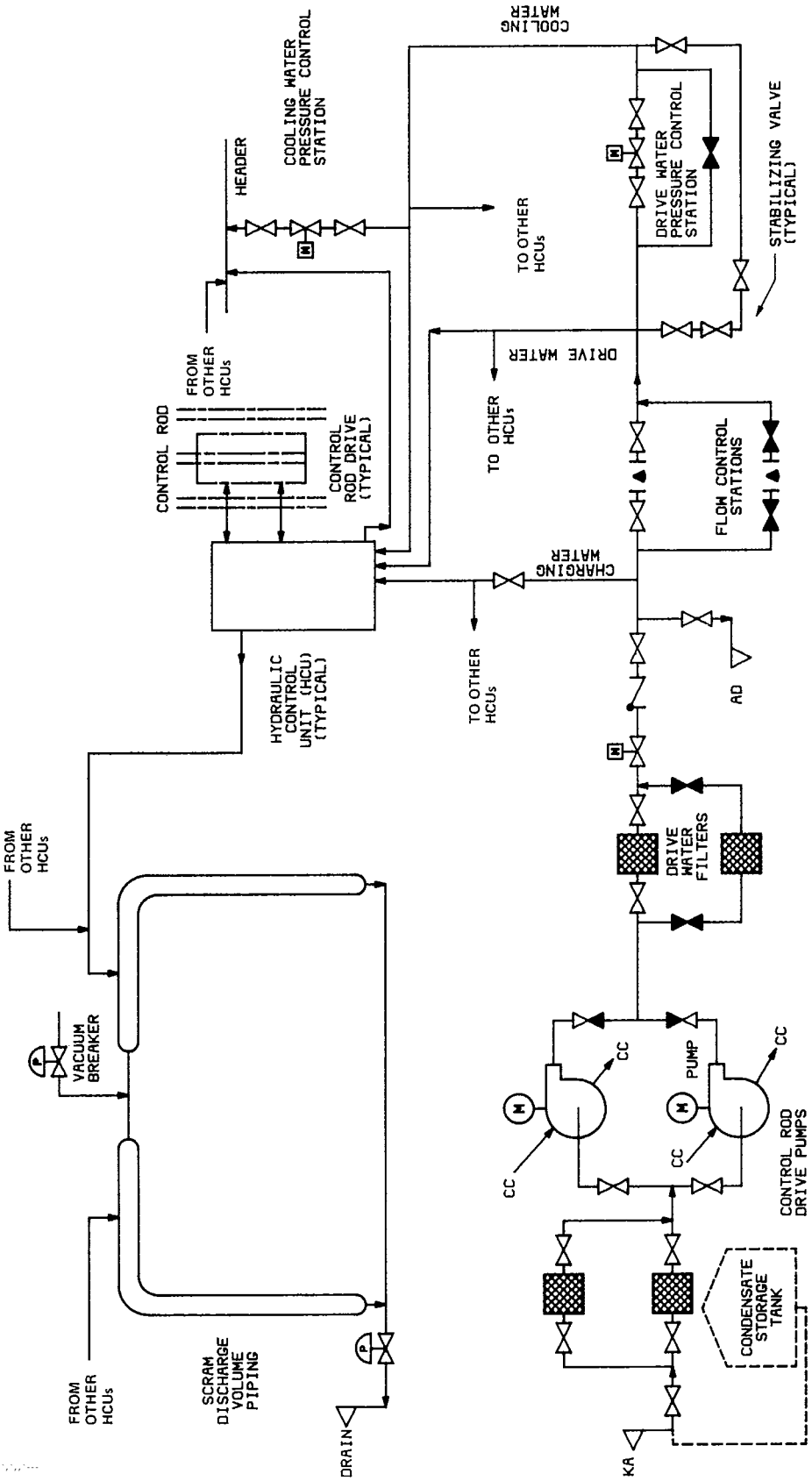

Fig 2
Control Rod Drive System (BWR) — AA

AD — Reactor Recirculation System (BWR)
KA — Condensate Storage and Transfer System
CC — Closed Cooling Water System

Copyright The Institute of Electrical and Electronics Engineers, Inc.
Provided by IHS under license with IEEE
No reproduction or networking permitted without license from IHS

Not for Resale

5.3 Control Rod Drive System (PWR)—AA

5.3.1 System Function. The control rod drive system (PWR) provides the means to insert and retract control rods within the nuclear reactor core.

5.3.2 System Description. The control rod drive system (PWR) consists of control rod drive mechanisms, the control rods, manual controls and interlocks for manipulating the control rods, control rod position indication, and control rod drive electrical power supplies.

The control rod drive mechanisms are electromechanical devices which convert electrical energy into linear motion of the control rod. For rapid control rod insertion, electrical power to the control rod drive mechanism is interrupted by the reactor trip breakers which causes the control rod to be released and to fall into the reactor core by gravity. Two basic control rod drive system designs are in use. One type is the magnetic jack design and the other is a lead screw and roller nut mechanism.

5.3.3 Mode of Operation. The control rod drive system (PWR) operates during normal reactor operation and in the event of an emergency reactor shutdown (scram).

5.3.4 Major Interfacing Systems

Plant Protection System	JC
Control Rod Drive Cooling System (PWR)	CD
Low Voltage Power System—Class 1E	ED
Reactor Coolant System (PWR)	AB
Reactor Core System	AC
Reactor Power Control System	JD

5.3.5 Major Equipment

Control Rod Drive Mechanisms
Control Rods
Control Rod Position Indication
Control Rod Drive Power Supply
Control Rod Manual Controls, Interlocks, and Instrumentation
Reactor Trip Breakers

Copyright The Institute of Electrical and Electronics Engineers, Inc.
Provided by IHS under license with IEEE
No reproduction or networking permitted without license from IHS
Not for Resale

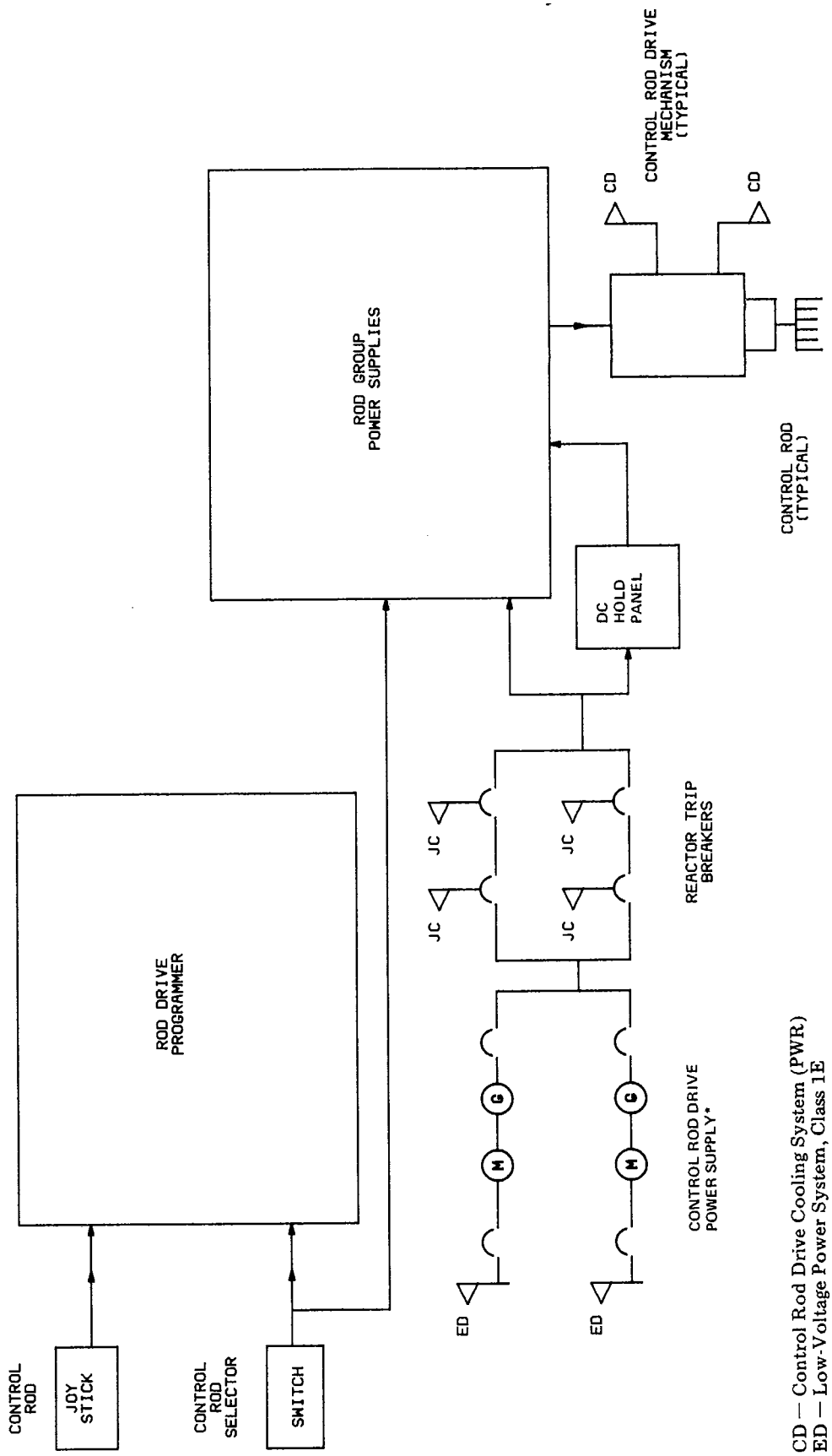

Fig 3
Control Rod Drive System (PWR) — AA

CD — Control Rod Drive Cooling System (PWR)
ED — Low-Voltage Power System, Class 1E
JC — Plant Protection System

*Not in all designs.

Copyright The Institute of Electrical and Electronics Engineers, Inc.
Provided by IHS under license with IEEE
No reproduction or networking permitted without license from IHS
Not for Resale

5.4 Reactor Coolant System (PWR)—AB

5.4.1 System Function. The reactor coolant system (PWR) performs the following functions:

(1) Transfers thermal energy to the steam generators where steam is produced for use in the turbine generator.

(2) Serves as a secondary barrier to the release of radioactive fission products from the reactor core to the environment.

5.4.2 System Description. The reactor coolant system (PWR) circulates water in a closed cycle, removing heat from the reactor core and internals and using that heat to generate and deliver steam for the operation of the turbine generator. The major components of the system are the reactor vessel, two or more steam generators, two or more reactor coolant pumps, and a pressurizer vessel and its associated safety and relief valves.

Heat that is generated as a result of the nuclear reaction taking place within the reactor core is absorbed by the reactor coolant being circulated through the system. Upon exiting the reactor core, the heated coolant passes through the tube side of the steam generators. Steam is produced within the steam generators as a result of the heat exchange between the pressurized reactor coolant within the steam generator tubes and the feedwater being circulated through the shell side. The steam thus produced is routed from the steam generators to the turbine generator by way of the main steam system. After giving up its heat for steam production within the steam generators, the reactor coolant is pumped back to the reactor vessel by the reactor coolant pump(s) and the cycle begins anew. A pressurizer is connected to the circulation piping to accommodate coolant expansion/contraction and regulate the system's operating pressure through an arrangement of spray nozzles and electric heaters which alternately condense and generate steam inside the pressurizer as required in order to maintain the system's operating pressure. To prevent overpressurization of the system, safety and relief valves are provided on the pressurizer.

5.4.3 Mode of Operation. The reactor coolant system (PWR) is in use during startup, normal power operation, and hot standby.

5.4.4 Major Interfacing Systems

Chemical and Volume Control/Makeup and Purification System (PWR)	CB
Residual Heat Removal/Low Pressure Safety Injection (PWR)	BP
Main/Reheat Steam System	SB
Feedwater System	SJ
Auxiliary/Emergency Feedwater System (PWR)	BA
Steam Generator Blowdown System (PWR)	WI
Boron Recycle System (PWR)	CA
Reactor Core System	AC
Closed/Component Cooling Water System	CC
Feedwater/Steam Generator Water Level Control System	JB
Control Rod Drive System (PWR)	AA
Medium Voltage Power System	EA
Reactor Power Control System	JD
Post Accident Monitoring System	IP
High Pressure Safety Injection System	BQ

5.4.5 Major Components

Reactor Vessel and Internals
Reactor Coolant Pumps
Steam Generators
Pressurizer
Pressurizer Safety and Relief Valve
Reactor Coolant Loop Piping
Pressurizer Heaters and Controls

Copyright The Institute of Electrical and Electronics Engineers, Inc.
Provided by IHS under license with IEEE
No reproduction or networking permitted without license from IHS Not for Resale

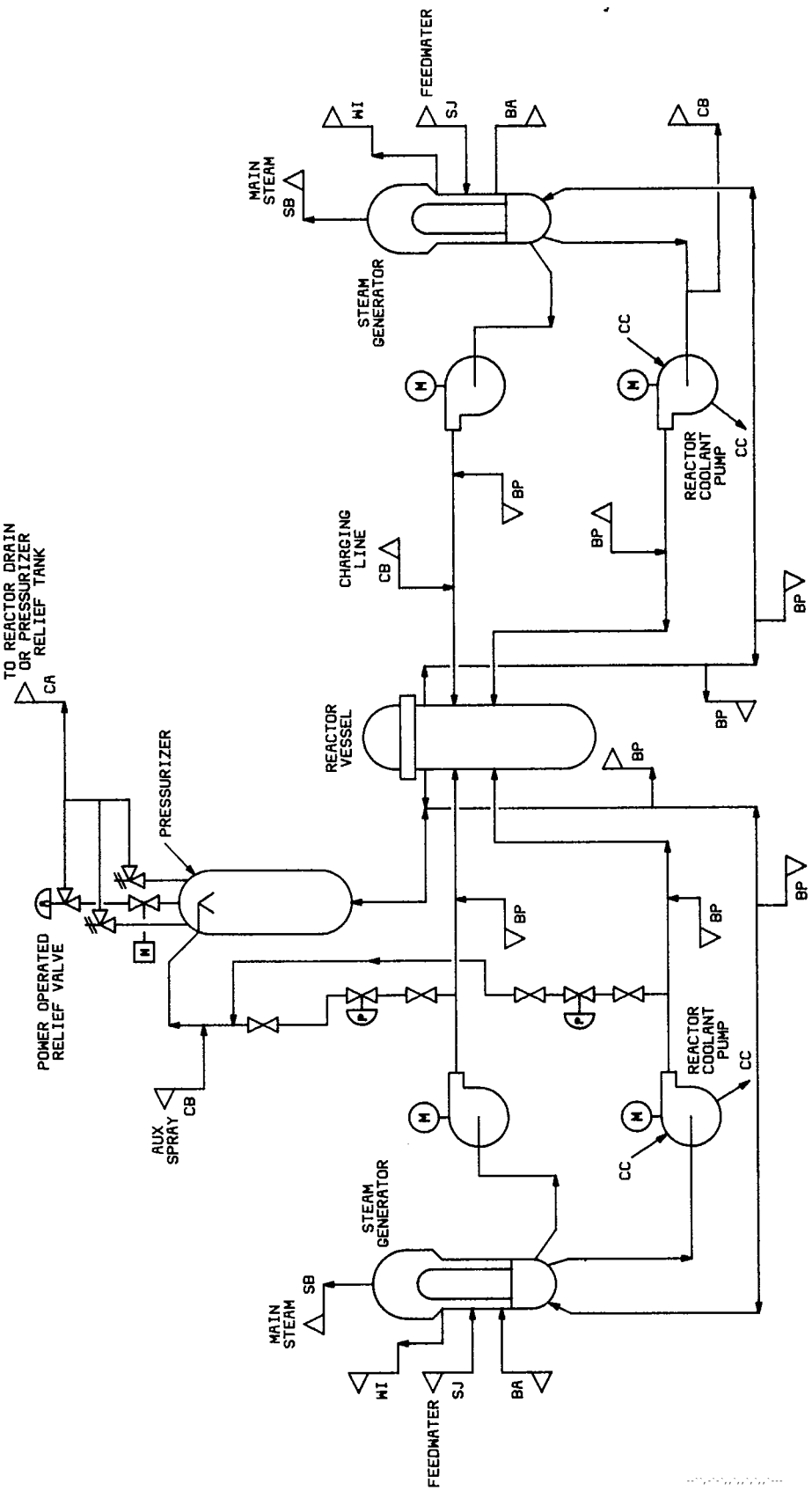

BA — Auxiliary/Emergency Feedwater System (PWR)
BP — Residual Heat Removal/Low Pressure Safety Injection System (PWR)
CA — Boron Recycle System (PWR)
CB — Chemical and Volume Control System/Makeup and Purification System (PWR)
SB — Main/Reheat Steam System
SJ — Feedwater System
WI — Steam Generator Blowdown System (PWR)

Fig 4
Reactor Coolant System (PWR) — AB

Copyright The Institute of Electrical and Electronics Engineers, Inc.
Provided by IHS under license with IEEE
No reproduction or networking permitted without license from IHS
Not for Resale

5.5 Reactor Core System—AC

5.5.1 System Function. The reactor core system generates thermal energy by means of the nuclear fission process.

5.5.2 System Description. The reactor core system consists of nuclear fuel assemblies, fuel channels (BWR), and startup neutron sources.

Each fuel assembly consists of an array of fuel rods, which contain enriched uranium dioxide fuel pellets and burnable neutron poisons, control rod guide tubes (PWR), and in-core instrumentation guide tubes (PWR).

5.5.3 Mode of Operation. The reactor core system is in use during normal plant operation.

5.5.4 Major Interfacing Systems

Reactor Coolant System (PWR)	AB
Reactor Recirculation System (BWR)	AD
Control Rod Drive System	AA
Incore/Excore Monitoring System	IG

5.5.5 Major Equipment

Nuclear Fuel Assemblies
Startup Neutron Sources

5.6 Reactor Recirculation System (BWR)—AD

5.6.1 System Function. The reactor recirculation system (BWR) generates dry saturated steam from the thermal energy produced by nuclear fission in the reactor core.

5.6.2 System Description. A typical system consists of the reactor vessel, its internal components and appurtenances, and external recirculation loops and associated controls. Falling within the physical confines of the reactor recirculation system, but not a part of the system, are the nuclear fuel assemblies, control rods, control rod drive mechanisms, and in-core nuclear instrumentation.

Typical system operation for the most prevalent type of system arrangement begins when feedwater enters the reactor vessel in the upper region along the outer periphery. Feedwater spargers then distribute the incoming feedwater into the annular region between the core shroud and the vessel wall (annulus) and the flow starts a downward path. The system employs an internal/external recirculation arrangement to obtain forced feedwater flow through the reactor core where the conversion of feedwater to steam takes place. A portion of the downward flow in the annulus (normally about one-third) is removed from the vessel and pumped by the recirculation pump through a manifold to which a number of riser pipes are attached which feed jet pumps located at the bottom of the annulus. This flow is then discharged from one of several jet pump nozzles into the initial stage of jet pump throat where, due to a momentum exchange process, it induces surrounding water in the downcomer region (the remaining two-thirds of the downward annulus flow) to be drawn into the jet pump throat where these two flows mix and then diffuse in the jet pump diffuser to be finally discharged into the lower core plenum. The flow of water then turns upwards where it flows between the control rod drive guide tubes and enters the fuel support where the flow is individually directed to each fuel bundle through the nose piece. The coolant water passes along the individual fuel rods inside the fuel channel where it is heated and becomes a two-phase steam-water mixture. The steam-water mixture enters a plenum directly above the core and bounded by the separator dome which opens to the array of fixed steam separators. The steam is separated from the water and passes through a dryer where any remaining water is removed. Saturated steam leaves the vessel through main steam system piping connections near the top of the reactor vessel. Water collected in the support tray of the dryer is routed through drain lines, joins the water leaving the separators, and flows downward in the annulus where it joins the feedwater flow from the feedwater spargers.

5.6.3 Mode of Operation. The reator recirculation system (BWR) operates during reactor startup, reactor shutdown, and normal reactor operation.

5.6.4 Major Interfacing Systems

Main/Reheat Steam System	SB
Feedwater System	SJ
Closed/Component Cooling Water System	CC
Reactor Water Cleanup System (BWR)	CE
Residual Heat Removal/Low Pressure Coolant Injection System (BWR)	BO
Low Pressure Core Spray System (BWR)	BM
Reactor Core Isolation Cooling System (BWR)	BN
Standby Liquid Control System (BWR)	BR
Control Rod Drive System (BWR)	AA
High Pressure Core Spray System (BWR)	BG

Copyright The Institute of Electrical and Electronics Engineers, Inc.
Provided by IHS under license with IEEE
No reproduction or networking permitted without license from IHS
Not for Resale

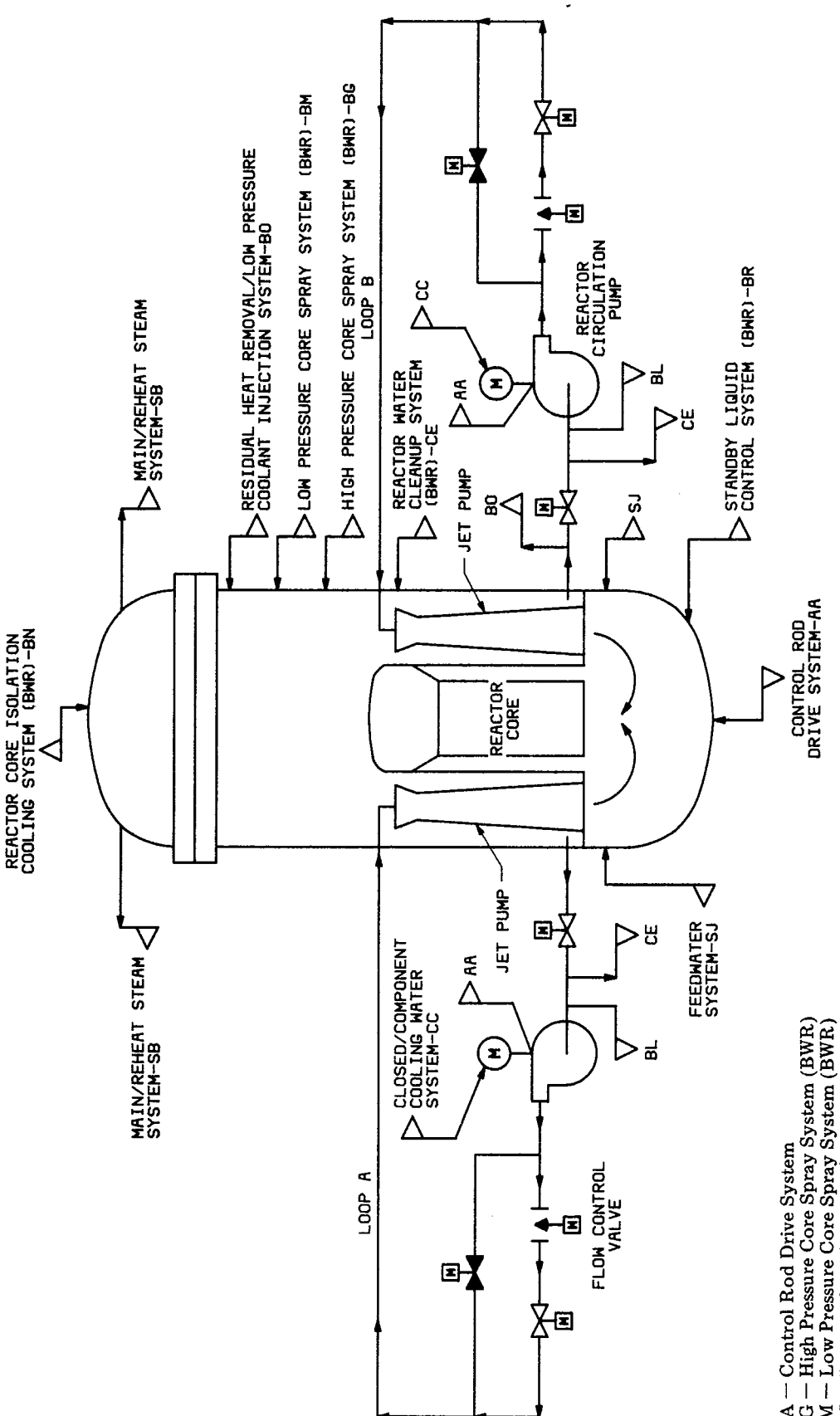

AA — Control Rod Drive System
BG — High Pressure Core Spray System (BWR)
BM — Low Pressure Core Spray System (BWR)
BN — Reactor Core Isolation Cooling System (BWR)
BO — Residual Heat Removal/Low Pressure Coolant Injection System BWR)
BR — Standby Liquid Control System (BWR)
CC — Closed/Component Cooling Water System
CE — Reactor Water Cleanup System (BWR)
SB — Main/Reheat Steam System
SJ — Feedwater System
BL — Isolation Condenser System

Fig 5
Reactor Recirculation System (BWR) — AD

Copyright The Institute of Electrical and Electronics Engineers, Inc.
Provided by IHS under license with IEEE
No reproduction or networking permitted without license from IHS

Not for Resale

Reactor Core System	AC	Control Rod Drive Housings and Supports
Isolation Condenser System	BL	In-Core Flux Monitoring Housings and Guide Tubes
Feedwater/Steam Generator Water Level Control System	JB	Core Support Plate
Medium Voltage Power System	EA	Fuel Supports
Reactor Power Control System	JD	Control Rod Guide Tubes
		Steam Separator Assembly
5.6.5 Major Equipment		Steam Dryer Assembly
Reactor Vessel		Jet Pump Assemblies
Core Shroud		Reactor Recirculation Pumps
Shroud Head		Recirculation Flow Control Valves
Shroud Support Structure		Recirculation Flow Control Circuitry

5.6.6 Engineered Safety Systems Group

Table 4

	Engineered Safety Systems Group	Plant Type		Revision
BA	Auxiliary/Emergency Feedwater System (PWR)		P	
BB	Containment Combustible Gas Control System	B	P	
BC	Containment Ice Condenser System (PWR)		P	
BD	Containment Leakage Control System	B	P	
BE	Containment Spray System (PWR)		P	
BF	Containment Vacuum Relief System	B	P	
BG	High Pressure Core Spray System (BWR)	B		
BH	Emergency/Standby Gas Treatment System	B	P	
BI	Essential Service Water System	B	P	
BJ	High Pressure Coolant Injection System (BWR)	B		
BK	Containment Fan Cooling System (PWR)		P	
BL	Isolation Condenser System (BWR)	B		
BM	Low Pressure Core Spray System (BWR)	B		
BN	Reactor Core Isolation Cooling System (BWR)	B		
BO	Residual Heat Removal/Low Pressure Coolant Injection System (BWR)	B		
BP	Residual Heat Removal/Low Pressure Safety Injection System (PWR)		P	
BQ	High Pressure Safety Injection System (PWR)	B		
BR	Standby Liquid Control System (BWR)	B	P	
BS	Ultimate Heat Sink System	B		
BT	Suppression Pool Makeup System (BWR)			

B—BWR P—PWR

Copyright The Institute of Electrical and Electronics Engineers, Inc.
Provided by IHS under license with IEEE
No reproduction or networking permitted without license from IHS

Not for Resale

5.7 Auxiliary/Emergency Feedwater System (PWR)—BA

5.7.1 System Function. The auxiliary emergency feedwater system (PWR) provides a source of feedwater to the steam generators to remove decay heat when the feedwater system is not available, and steam generator pressure is sufficiently high to prevent decay heat removal by the residual heat removal system (RHR).

5.7.2 System Description. The auxiliary emergency feedwater system (PWR) consists of one or more motor-driven auxiliary/emergency feedwater system pumps, a steam-driven or diesel-driven auxiliary/emergency feedwater pump, isolation valves, and associated controls and instrumentation.

The system provides feedwater to the steam generators for decay heat removal in the event of a loss of normal feedwater, a loss of normal ac electrical power, or a main steam or feedwater line rupture. The system may also serve as an alternate source of feedwater during plant start-up, hot standby, or cool down operations whenever conditions are such that operation of the feedwater system is not desirable. The normal source of water is the condensate storage tank which provides a short term emergency source of condensate quality water. In the event of a transient or accident requiring long term auxiliary/emergency feedwater operation, an alternate noncondensate quality source(s) of water is provided.

5.7.3 Mode of Operation. The auxiliary/emergency feedwater system (PWR) operates during startup, hot standby, cool down, and accident conditions.

5.7.4 Major Interfacing Systems

Condensate Storage and Transfer System	KA
Reactor Coolant System (PWR)	AB
Main/Reheat Steam System	SB
Closed/Component Cooling Water System	CC
Engineered Safety Features Actuation System	JE
Sampling and Water Quality System	KN
Nitrogen Supply System	LK
Medium Voltage Power System—Class 1E	EB

5.7.5 Major Equipment

Auxiliary/Emergency Feedwater Pumps and Drives

Isolation Valves

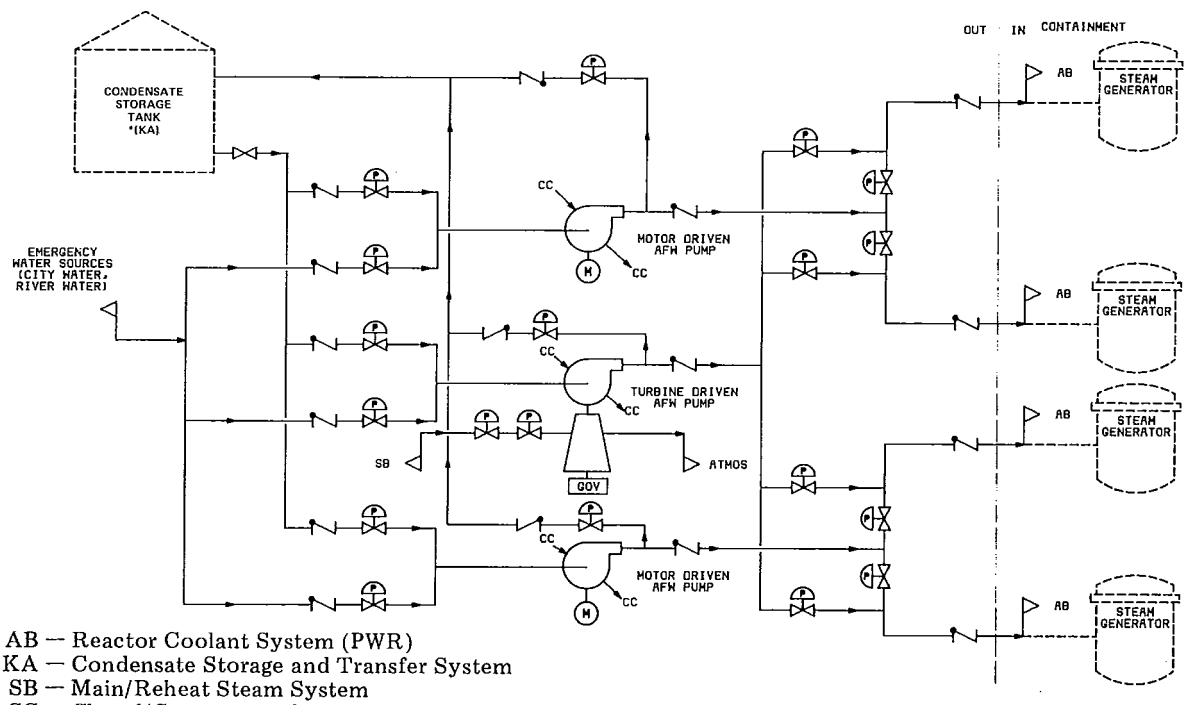

AB — Reactor Coolant System (PWR)
KA — Condensate Storage and Transfer System
SB — Main/Reheat Steam System
CC — Closed/Component Cooling Water System

*Some designs have a dedicated AFW storage tank.

Fig 6
Auxiliary/Emergency Feedwater System (PWR) — BA

Copyright The Institute of Electrical and Electronics Engineers, Inc.
Provided by IHS under license with IEEE
No reproduction or networking permitted without license from IHS
Not for Resale

5.8 Containment Combustible Gas Control System—BB

5.8.1 System Function. The containment combustible gas control system maintains the hydrogen concentration inside containment below acceptable levels following a loss of coolant accident (LOCA).

5.8.2 System Description. The containment combustible gas control system consists of hydrogen recombiners which remove hydrogen from the containment atmosphere following a LOCA. The hydrogen recombiners use heat to cause recombination of hydrogen and oxygen molecules to form water. The hydrogen recombiners may be located either inside or outside containment.

Hydrogen recombiners located inside containment are normally mounted on the containment operating floor. If the recombiners are located outside containment, the containment combustible gas control system also includes piping, valves, and containment penetrations for routing the containment hydrogen mixture through the recombiners and returning it to the containment.

The containment combustible gas control system may also include a hydrogen mixing subsystem to prevent the buildup of high local concentrations of hydrogen in areas which do not have good communication with the containment atmosphere [if separate from the containment fan cooling system (PWR)]. Such areas may include the drywell for a BWR or equipment compartments below the operating floor for a PWR. The mixing subsystem includes hydrogen mixing fans or compressors, and associated ductwork, dampers, and controls.

The containment combustible gas control system may also include a backup purge subsystem (if separate from the reactor building environmental control system) to reduce the buildup of hydrogen in the containment atmosphere by dilution.

For small containments, the containment combustible gas control system also includes additional hydrogen control equipment such as distributed spark igniters to prevent the buildup of explosive hydrogen concentrations in the event the hydrogen production rate exceeds hydrogen recombiner capability. For small containments, the containment combustible gas control system may also include nitrogen inerting equipment to limit the oxygen concentration below that which can form a combustible mixture with hydrogen.

5.8.3 Mode of Operation. The containment combustible gas control system operates only following an accident.

5.8.4 Major Interfacing Systems

Essential Service Water System BI

Varies with specific design.

5.8.5 Major Equipment

Hydrogen Recombiners
Hydrogen Mixing Fans or Compressors
Isolation Dampers
Nitrogen Inerting Equipment
Hydrogen Purge Fans

Copyright The Institute of Electrical and Electronics Engineers, Inc.
Provided by IHS under license with IEEE
No reproduction or networking permitted without license from IHS
Not for Resale

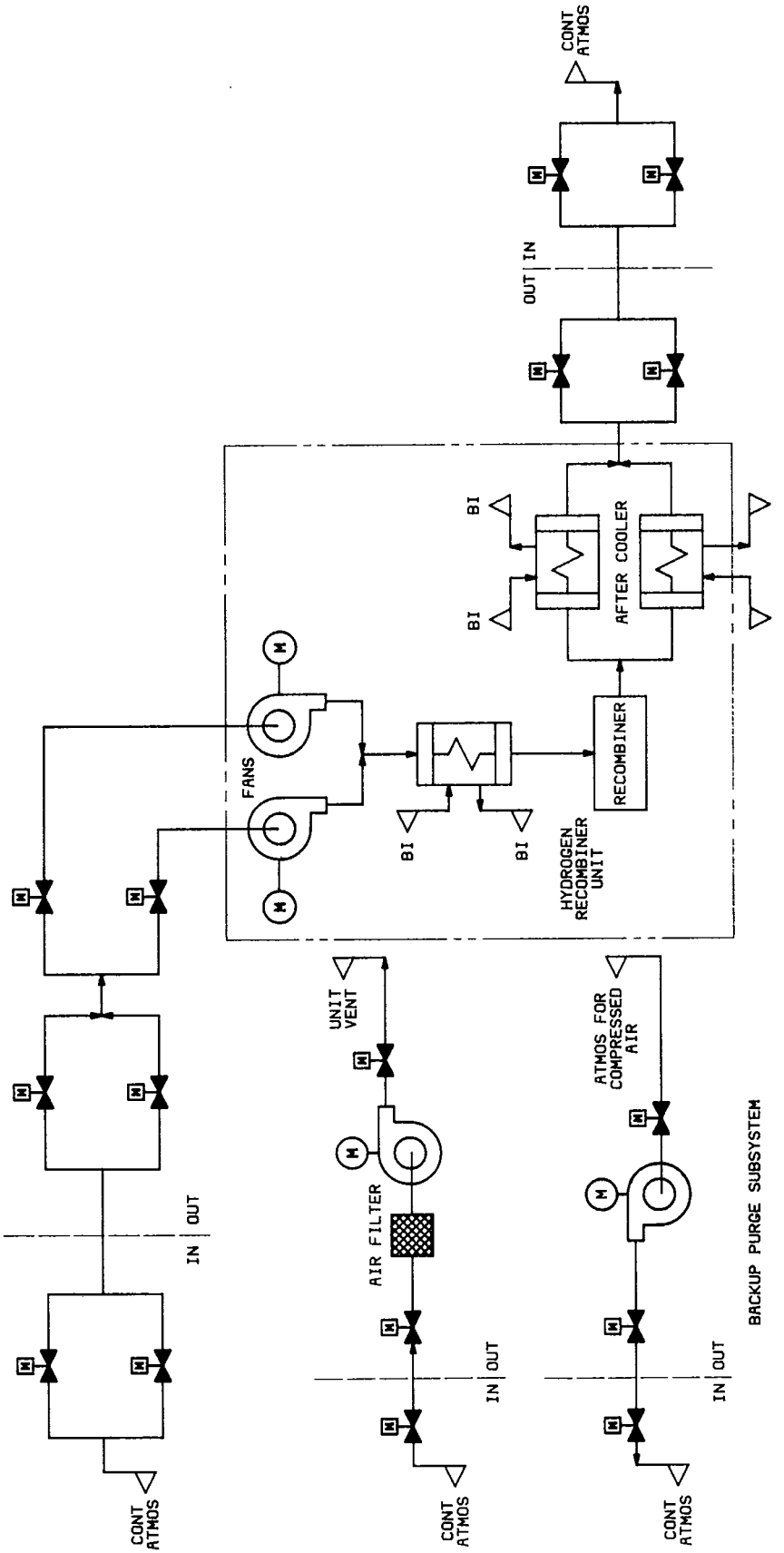

BI — Essential Service Water System

Fig 7
Containment Combustible Gas Control System — BB

Copyright The Institute of Electrical and Electronics Engineers, Inc.
Provided by IHS under license with IEEE
No reproduction or networking permitted without license from IHS

Not for Resale

5.9 Containment Ice Condenser System (PWR)—BC

5.9.1 System Function. The containment ice condenser system (PWR) absorbs thermal energy released from a loss of coolant accident (LOCA) or a main steam line break so as to limit the peak containment pressure.

5.9.2 System Description. The system consists of an ice condenser and a refrigeration subsystem. The ice condenser includes the ice baskets, inlet and vent doors, support structures, cooling ducts, insulation, and associated instrumentation. The refrigeration subsystem includes refrigeration chiller units, glycol cooling loops, fan cooler units, an ice machine, and associated instrumentation and controls. The refrigeration units are cooled by the nonessential service water system.

The ice condenser consists of a number of insulated compartments distributed around the perimeter of the containment. Each compartment contains ice baskets filled with borated ice. The ice compartments connect with the lower region of the containment, which houses the reactor coolant system (PWR), and extend into the upper region of the containment above the operating deck. In the event of a LOCA, the pressure buildup in the lower containment region causes the ice condenser inlet doors to open. Steam is condensed as it flows through the ice compartments, thus limiting the peak containment pressure. Vent doors are provided at the top of the ice compartments to vent air entering with the steam from the lower containment region.

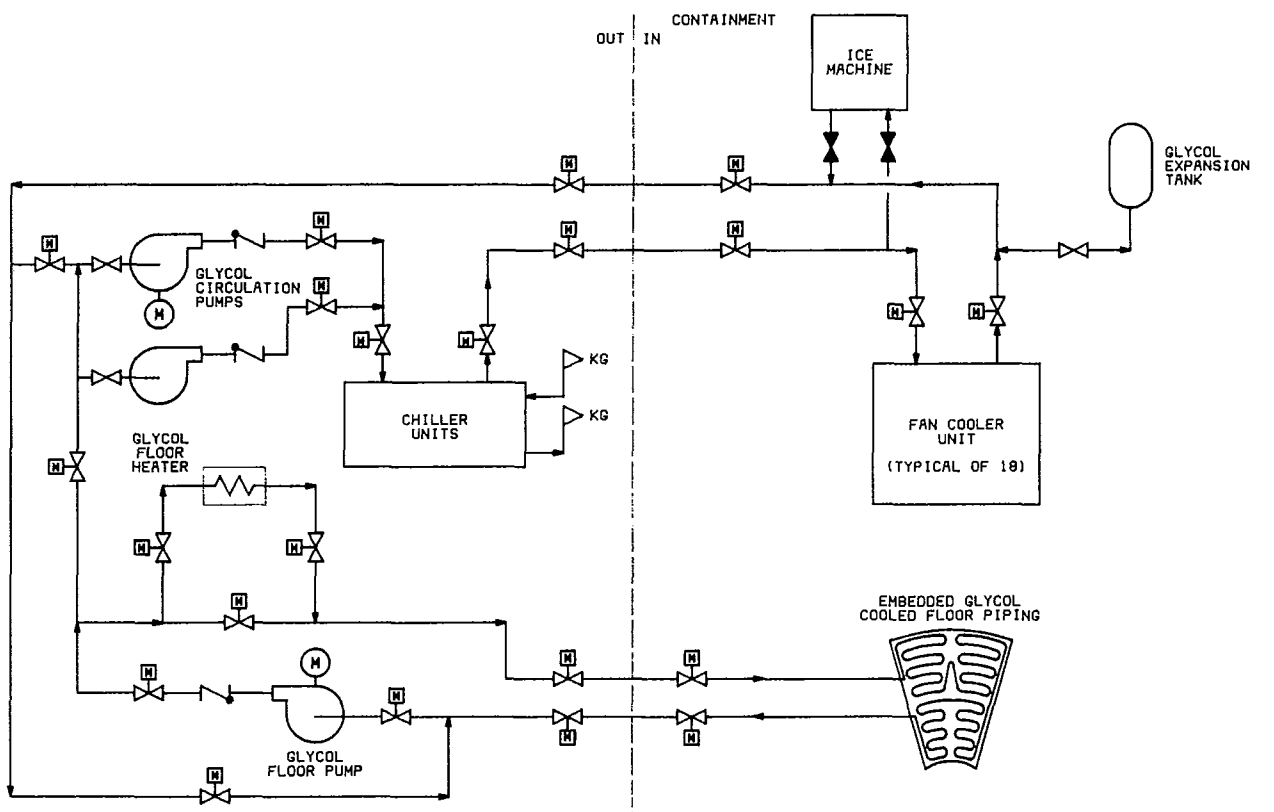

KG — Nonessential Service Water System

Fig 8
Containment Ice Condenser System (PWR) — BC
Refrigeration Subsystem

Copyright The Institute of Electrical and Electronics Engineers, Inc.
Provided by IHS under license with IEEE
No reproduction or networking permitted without license from IHS
Not for Resale

5.9.3 Mode of Operation. The ice condenser subsystem operates in the event of a LOCA. The refrigeration subsystem is normally in operation to refrigerate the ice condenser compartments.

5.9.4 Major Interfacing Systems

Reactor Containment Building	NH
Nonessential Service Water System	KG

5.9.5 Major Equipment

Chiller Units
Glycol Circulation Pumps
Fan Cooler Units
Inlet Doors
Vent Doors
Ice Baskets
Ice Machine
Glycol Expansion Tank
Glycol Flow Pump

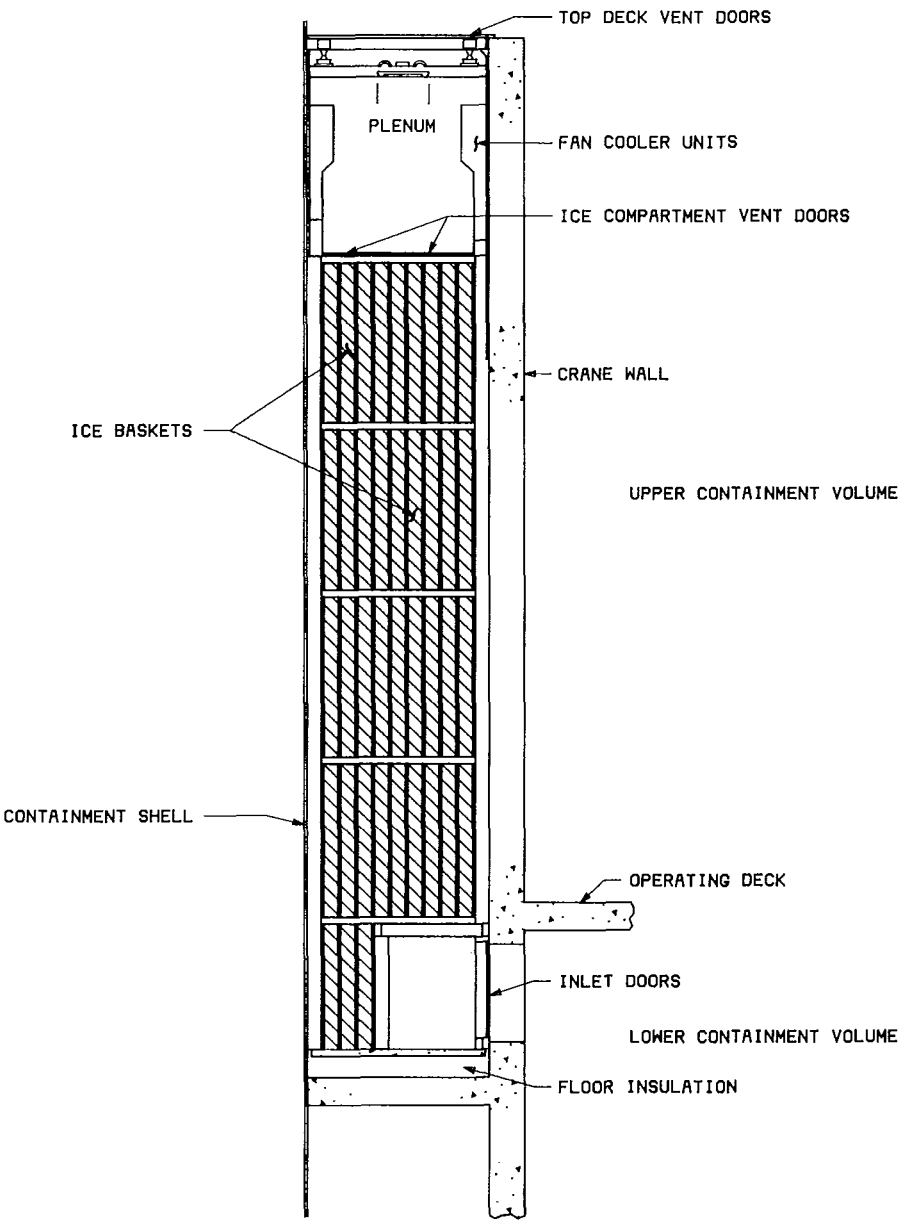

Fig 9
Containment Ice Condenser System (PWR) – BC
Ice Condenser Subsystem

Copyright The Institute of Electrical and Electronics Engineers, Inc.
Provided by IHS under license with IEEE
No reproduction or networking permitted without license from IHS

Not for Resale

5.10 Containment Leakage Control System —BD

5.10.1 System Function. The containment leakage control system controls the leakage of radioactive fission products through containment penetrations following a loss of coolant accident (LOCA).

5.10.2 System Description. The system controls the post-LOCA leakage of radioactive fission products through containment penetrations using one or both of the following methods:

(1) Positive sealing

(2) Leakage collection and filtration

A typical positive sealing subsystem maintains water, air, or nitrogen pressure between containment isolation valves at a higher pressure than the containment, so that, any leakage that can occur through the containment isolation valves is inward into the containment.

A typical leakage collection subsystem collects leakage past the inside containment isolation valve by maintaining the pressure between the containment isolation valves at less than atmospheric pressure, thus ensuring that any leakage is collected. This leakage is then routed to a filtration system such as the emergency/standby gas treatment system where radioactive fission products such as iodine are removed. An example of this type of subsystem for a BWR is the main steam isolation valve leakage control system which collects leakage past the main steam isolation valves following a LOCA and routes this leakage to the containment shield building annulus where it is processed by the emergency/standby gas treatment system prior to release to the atmosphere.

5.10.3 Mode of Operation. The containment leakage control system operates only following an accident.

5.10.4 Major Interfacing Systems. Systems which penetrate the reactor containment.

5.10.5 Major Equipment

Water Supply Tanks
Pumps
Air Compressors
Air Flasks
Blowers

5.11 Containment Spray System (PWR)—BE

5.11.1 System Function. The containment spray system serves the following functions following a loss of coolant accident (LOCA).

(1) Reduces peak containment pressure

(2) Removes iodine from the containment atmosphere to reduce off-site radiation doses

5.11.2 System Description. A typical containment spray system consists of two redundant, full-capacity spray trains each of which include a containment spray pump, chemical additive tank, spray headers and associated valves, piping, and instrumentation. Some PWR designs also include a containment spray heat exchanger.

Each containment spray pump takes suction from the residual heat removal/low pressure safety injection system (PWR), which provides borated water from the refueling water storage tank or the containment sump. The water is pumped to circular piping headers equipped with spray nozzles which are located high within the containment structure. A portion of the containment spray pump discharge flows through an eductor where a spray chemical additive, such as hydrazine or sodium hydroxide, is mixed with the spray water. The discharge from the spray headers serves to condense steam generated by the LOCA and thus reduce the peak containment pressure. The spray chemical additive removes any containment airborne iodine that may have been released during the LOCA and thus reduces off-site radiation doses.

5.11.3 Mode of Operation. The containment spray system operates only in the event of an accident.

5.11.4 Major Interfacing Systems

Residual Heat Removal/Low Pressure Safety Injection System (PWR)	BP
Closed/Component Cooling Water System	CC
Engineered Safety Features Actuation System	JE
Medium Voltage Power System—Class 1E	EB
Nitrogen Supply System	LK
High Pressure Safety Injection System (PWR)	BQ

5.11.5 Major Components

Containment Spray Pumps
Chemical Additive Tanks
Spray Headers

Copyright The Institute of Electrical and Electronics Engineers, Inc.
Provided by IHS under license with IEEE
No reproduction or networking permitted without license from IHS

Not for Resale

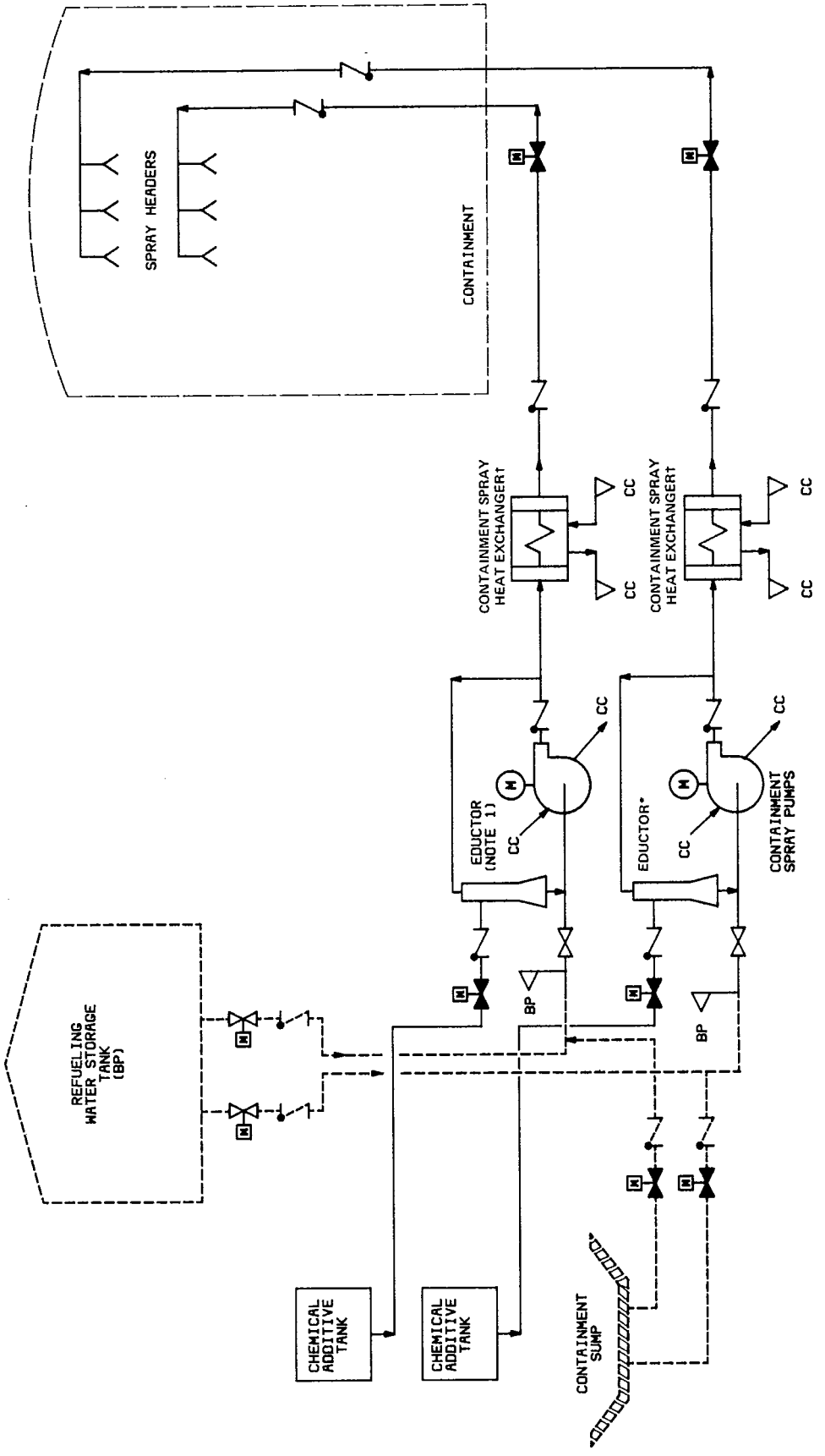

BP — Residual Heat Removal/Low Pressure Safety Injection System (PWR)
CC — Closed/Component Cooling Water System (PWR)

*Some designs use spray additive pumps in lieu of eductors.
†Not provided in some designs.

Fig 10
Containment Spray System (PWR) — BE

Copyright The Institute of Electrical and Electronics Engineers, Inc.
Provided by IHS under license with IEEE
No reproduction or networking permitted without license from IHS

Not for Resale

5.12 Containment Vacuum Relief System —BF

5.12.1 System Function. The containment vacuum relief system relieves excess negative pressure in the drywell or containment to prevent the possibility of structural buckling.

5.12.2 System Description. A typical system consists of backdraft dampers or check valves, vacuum relief dampers or valves, ductwork or piping interconnecting the drywell with the containment (BWR) and the containment with atmosphere, and actuating instrumentation. This system is provided for containment designs such as steel containments which could possibly be damaged in the event of excess external differential pressure.

5.12.3 Mode of Operation. The containment vacuum relief system operates in the event of abnormal or accident conditions.

5.12.4 Major Interfacing Systems

Reactor Containment Building	NH
Essential Air System	LE

5.12.5 Major Equipment

Vacuum Relief Dampers or Valves

5.13 High Pressure Core Spray System (BWR)—BG

5.13.1 System Function. The high pressure core spray system (BWR) provides cooling water to the reactor core following a loss of coolant accident (LOCA), thus preventing nuclear fuel damage.

5.13.2 System Description. The high pressure core spray system (BWR) is an emergency core cooling water system which is initiated automatically to deliver cooling water to the reactor core following a LOCA. The system also serves as a backup source for makeup water to the reactor vessel in the event of reactor isolation and failure of the reactor core isolation cooling system (BWR). A typical high-pressure core spray system (BWR) consists of one or more high head pumps which take suction from the condensate storage tank (preferred source) or the suppression pool and deliver cooling water to the reactor core by way of a core spray sparger. A line fill pump is usually provided to maintain the system piping full of water to ensure quick system response and prevent any potential damage from hydraulic shock when the system is first brought into operation.

5.13.3 Mode of Operation. The high-pressure core spray system (BWR) operates following an accident.

5.13.4 Major Interfacing Systems

Reactor Recirculation System (BWR)	AD
Condensate Storage and Transfer System	KA
Medium-Voltage Power System—Class 1E	EB

5.13.5 Major Equipment

High-Pressure Core Spray Pumps
Line Fill Pump
Strainers
Core Spray Sparger

Copyright The Institute of Electrical and Electronics Engineers, Inc.
Provided by IHS under license with IEEE
No reproduction or networking permitted without license from IHS

Not for Resale

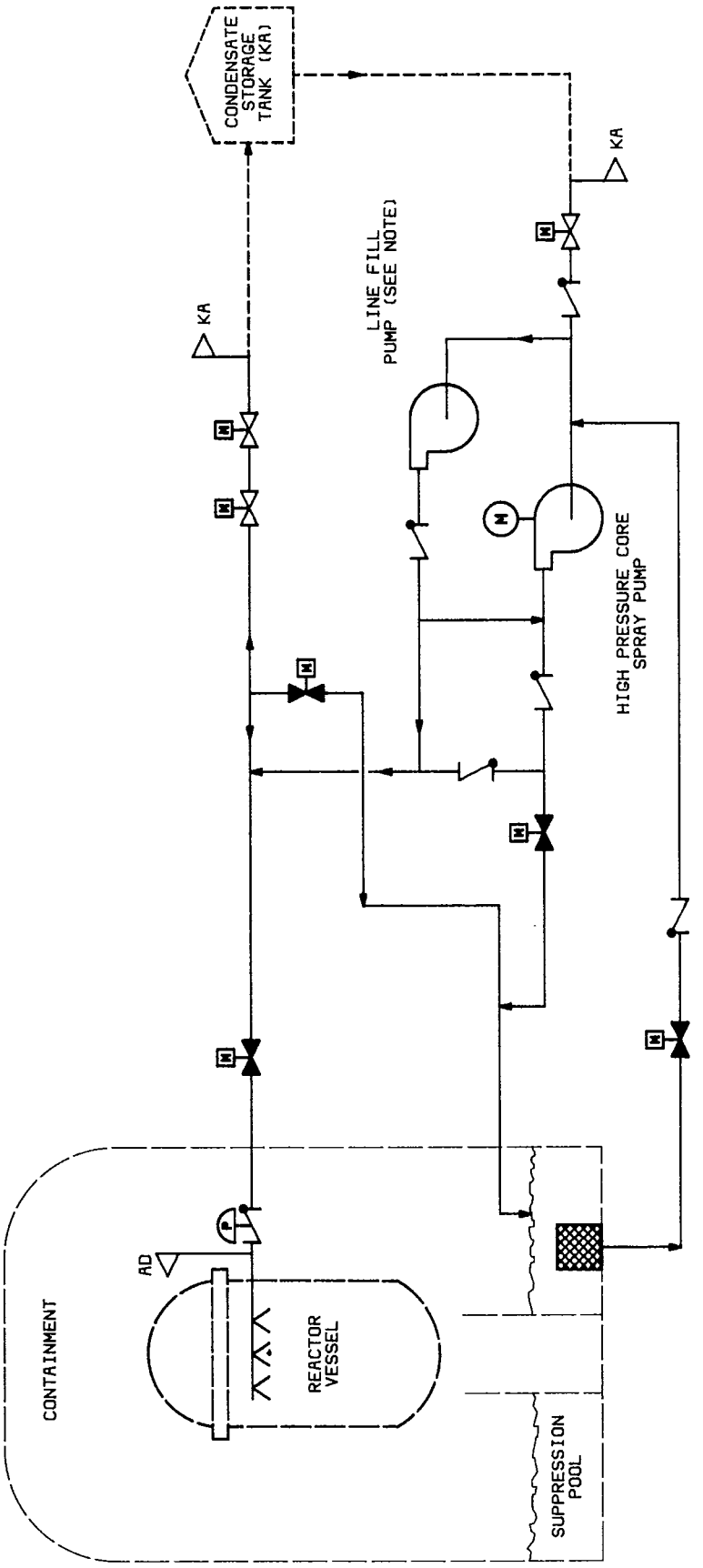

Fig 11
High-Pressure Core Spray System (BWR) — BG

KA — Condensate Storage and Transfer System
AD — Reactor Recirculation System

NOTE: Some designs use a head tank.

Copyright The Institute of Electrical and Electronics Engineers, Inc.
Provided by IHS under license with IEEE
No reproduction or networking permitted without license from IHS
Not for Resale

5.14 Emergency/Standby Gas Treatment System—BH

5.14.1 System Function. The emergency/standby gas treatment system limits the release of radioactivity to the environment following an accident.

5.14.2 System Description. The emergency/standby gas treatment system consists of two redundant divisions of equipment, each consisting of an exhaust fan, air cleanup unit and associated ductwork, dampers, and instrumentation. Each air cleanup unit includes a moisture separator, prefilter, electric heating coil, HEPA filters, and charcoal filters.

In the event of an accident, the emergency/standby gas treatment system is automatically initiated to maintain secondary containment areas at a negative pressure and filter the exhaust air to remove radioactive iodine which has leaked past primary containment. Depending upon the plant specific design, the emergency/standby gas treatment system may serve any or all of the following areas: the annulus between the containment and shield building, the annulus between the containment and the secondary containment enclosure, the fuel building, auxiliary building areas, and reactor building areas. The emergency/standby gas treatment system may also be used to limit the release of radioactivity in the event of a fuel handling accident.

5.14.3 Mode of Operation. The emergency/standby gas treatment system operates in the event of an accident.

5.14.4 Major Interfacing Systems

Auxiliary Building Environmental Control System	VF
Fuel Building Environmental Control System	VG
Reactor Building Environmental Control System	VA
Shield Building Annulus Return/Exhaust System	VC
Essential Air System	LE
Drywell Environmental Control System	VB

5.14.5 Major Equipment

Exhaust Fans
Air Cleanup Units
Annulus Mixing Fans
Isolation and Control Dampers

Copyright The Institute of Electrical and Electronics Engineers, Inc.
Provided by IHS under license with IEEE
No reproduction or networking permitted without license from IHS
Not for Resale

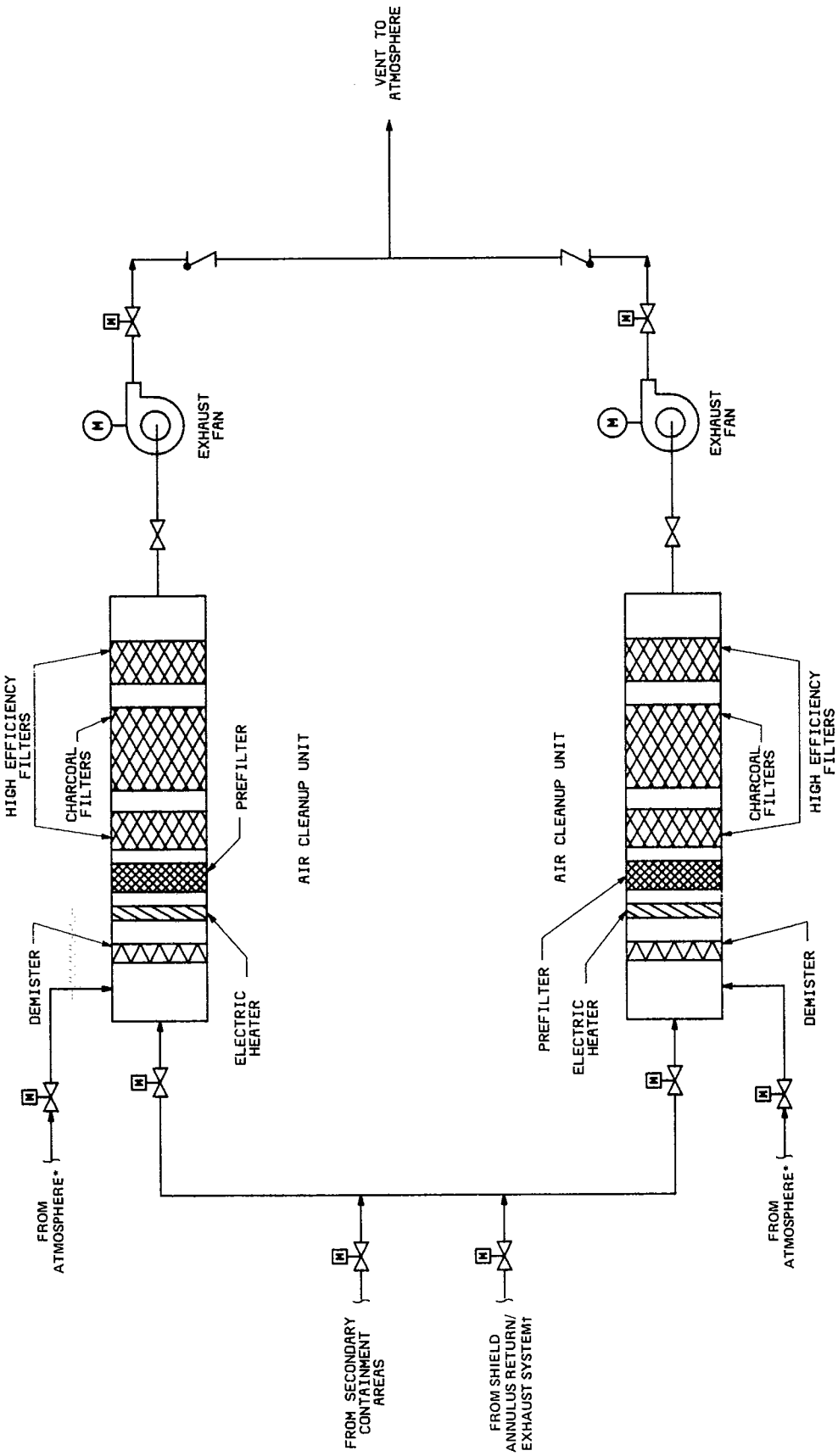

Fig 12
Emergency/Standby Gas Treatment System — BH

*Some designs use heat removal fans.
†Not all designs.

Copyright The Institute of Electrical and Electronics Engineers, Inc.
Provided by IHS under license with IEEE
No reproduction or networking permitted without license from IHS

Not for Resale

5.15 Essential Service Water System—BI

5.15.1 System Function. The essential service water system provides raw cooling water to essential equipment which is used for the safe shutdown of the reactor or to prevent or mitigate the consequences of accidents.

5.15.2 System Description. A typical essential service water system consists of two or more redundant cooling water loops (Divisions 1 and 2) each of which include an essential service water pump and associated valves, piping, and instrumentation. The essential service water pumps take suction from the ultimate heat sink system and deliver cooling water to the essential service water system cooling loads. The cooling water is then returned to the ultimate heat sink system where the waste heat is rejected to the environment. The essential service water system may also serve nonessential equipment to permit operation during a loss of normal plant ac electrical power. These cooling loads are automatically isolated in the event of an accident.

5.15.3 Mode of Operation. The essential service water system operates during normal, startup, shutdown, and accident conditions.

5.15.4 Major Interfacing Systems. The following list of interfacing systems is typical and may vary according to station design.

Containment Fan Cooling System (PWR)	BK
Diesel Cooling Water System	LB
Closed/Component Cooling Water System	CC
Auxiliary Building Environmental Control System	VF
Fuel Building Environmental Control System	VG
Control Rod Drive Cooling System (PWR)	CD
Emergency Onsite Power Supply Building Environmental Control System	VJ
Control Building/Control Complex Environmental Control System	VI
Reactor Drywell Environmental Control System (BWR)	VB
Residual Heat Removal/Low Pressure Coolant Injection System (BWR)	BO
Ultimate Heat Sink System	BS
Containment Combustible Gas Control System	BB
Fuel Pool Cooling and Purification System	DA
Fire Protection System (Water)	KP
Medium Voltage Power System—Class 1E	EB
Engineered Safety Features Actuation System	JE
Emergency Onsite Power Supply System	EK
Heat Rejection Chemical Treatment System	KF
Reactor Building Environmental Control System	VA

5.15.5 Major Equipment

Essential Service Water Pumps

5.15.6 Essential Cooling Loads (Typical)

Closed Cooling Water Heat Exchanger (PWR)
Standby Diesel Generator
Reactor Auxiliary Building Environmental Control System
Fuel Building Environmental Control System
Diesel Generator Building Environmental Control System
Control Building Environmental Control System
Essential Service Water Pump Building Environmental Control System
Residual Heat Removal Heat Exchangers (BWR)
Fuel Pool Cooling and Purification Heat Exchangers (BWR)
Containment Fan Coolers (PWR)

5.15.7 Nonessential Cooling Loads (Typical)

Control Rod Drive Cooling Water Heat Exchanger (PWR)
Closed Cooling Water Heat Exchanger (BWR)
Reactor Drywell Environmental Control System (BWR)

Copyright The Institute of Electrical and Electronics Engineers, Inc.
Provided by IHS under license with IEEE
No reproduction or networking permitted without license from IHS

Not for Resale

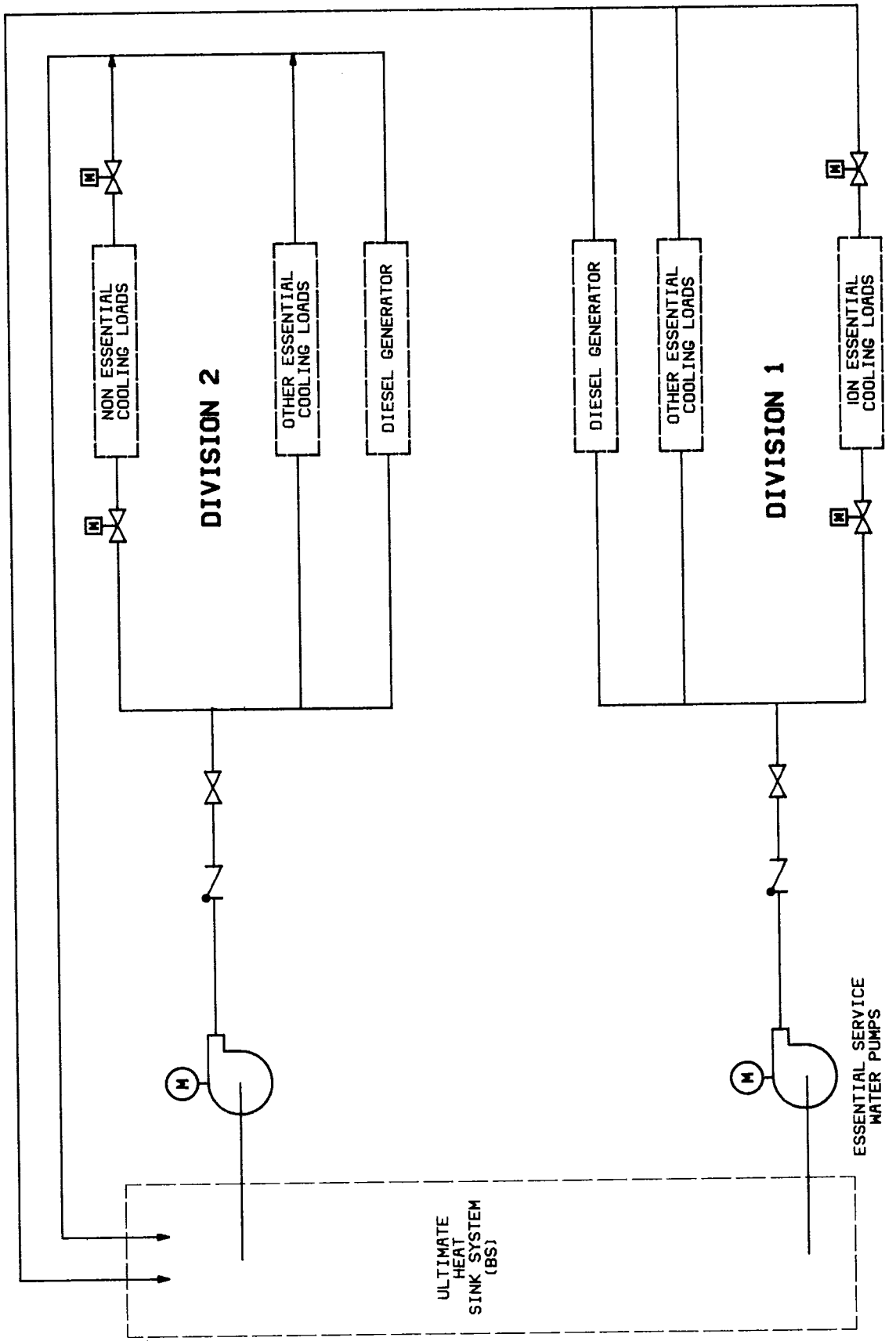

Fig 13
Essential Service Water System — BI

NOTE: Some designs have a division 3 cooling loop.

Copyright The Institute of Electrical and Electronics Engineers, Inc.
Provided by IHS under license with IEEE
No reproduction or networking permitted without license from IHS

Not for Resale

5.16 High Pressure Coolant Injection System (BWR)—BJ

5.16.1 System Function. The high pressure coolant injection system (BWR) provides cooling water to the reactor core following a loss of coolant accident (LOCA), thus preventing nuclear fuel damage.

5.16.2 System Description. The high pressure coolant injection system (BWR) is an emergency core cooling water system which is initiated automatically to deliver cooling water to the reactor core following a small break LOCA which does not result in rapid depressurization of the reactor vessel. The system also serves as a backup source for makeup water to the reactor vessel in the event of reactor isolation and failure of the Reactor Core Isolation Cooling System (BWR). A typical high pressure coolant injection system consists of a turbine-driven pump which takes suction from the condensate storage tank (preferred source) or the suppression pool, and delivers cooling water to the reactor core by way of the feedwater system piping.

5.16.3 Mode of Operation. The high pressure coolant injection system (BWR) operates following an accident.

5.16.4 Major Interfacing Systems

Condensate Storage and Transfer System	KA
Feedwater System	SJ
Main/Reheat Steam System	SB

5.16.5 Major Equipment

Strainers

High Pressure Coolant Injection Pump, Turbine, and Lube Oil Cooler

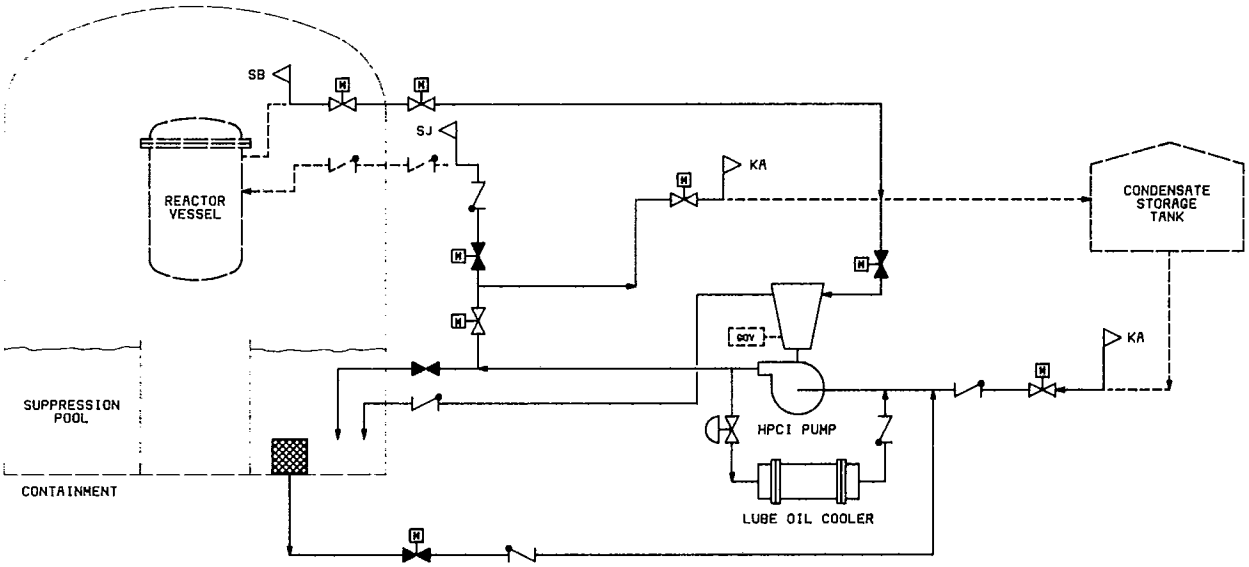

KA — Condensate Storage and Transfer System
SB — Main/Reheat Steam System
SJ — Feedwater System

Fig 14
High-Pressure Coolant Injection System (BWR) — BJ

Copyright The Institute of Electrical and Electronics Engineers, Inc.
Provided by IHS under license with IEEE
No reproduction or networking permitted without license from IHS

Not for Resale

5.17 Containment Fan Cooling System (PWR)—BK

5.17.1 System Function. The containment fan cooling system (PWR) provides long-term containment heat removal following a loss of coolant accident (LOCA) or a main steam line break inside containment.

5.17.2 System Description. The system consists of fan cooler units and associated ductwork, dampers, backflow preventers, and instrumentation. Two 100% cooling trains are provided. Each train may consist of one or more fan cooler units.

The fan coolers may also be provided with filtration units to remove airborne iodine following an accident and thus reduce the amount of radioactivity released to the environment.

During accident conditions, heat is removed from the fan cooler units by the essential service water system. During normal operation, heat is usually removed from the fan cooler units by the chilled water system.

5.17.3 Mode of Operation. The containment fan cooling system (PWR) operates during normal and accident conditions.

5.17.4 Major Interfacing Systems

Essential Service Water System	BI
Chilled Water System	KM
Engineered Safety Features Actuation System	JE

5.17.5 Major Equipment

Fan Cooler Units
Filtration Units

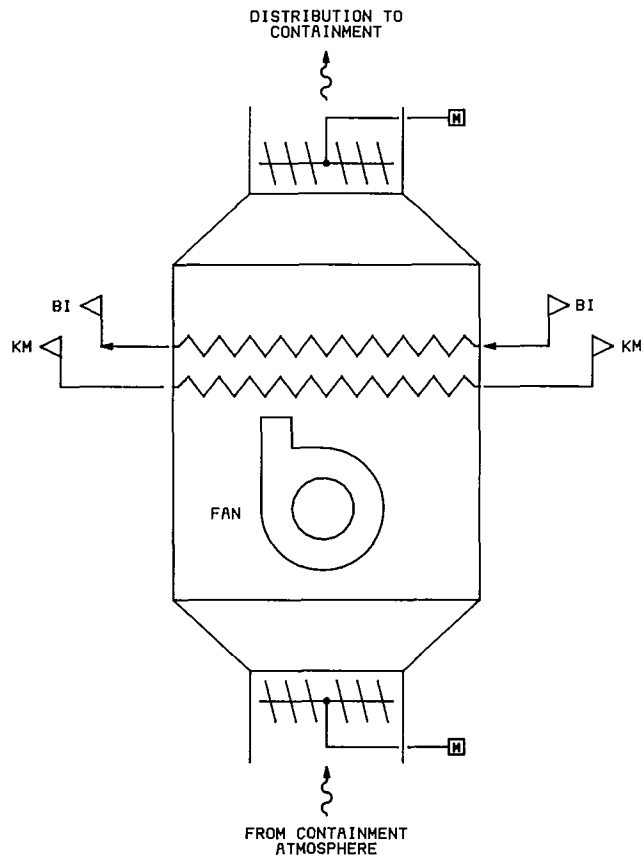

BI — Essential Service Water System
KM — Chilled Water System

NOTE: The number of cooling units may vary among designs.

Fig 15
Containment Fan Cooling System (PWR) — BK

Copyright The Institute of Electrical and Electronics Engineers, Inc.
Provided by IHS under license with IEEE
No reproduction or networking permitted without license from IHS

Not for Resale

5.18 Isolation Condenser System (BWR)—BL

5.18.1 System Function. The isolation condenser system (BWR) provides a heat sink for the reactor in the event it is isolated from the main condenser or if all feedwater is lost.

5.18.2 System Description. The isolation condenser system (BWR) consists of one or more isolation condensers and associated piping and valves. The system operates by natural circulation without the need for ac electrical power.

When the system is in operation, steam flows from the reactor through the tubes of the isolation condenser where it is condensed and returned to the reactor by gravity flow. The shell side of the isolation condenser is filled with condensate quality water which boils and vents to the atmosphere as the reactor steam is condensed in the tubes.

Makeup to the isolation condenser is normally from the condensate storage and transfer system with the fire protection system as a backup source. The system may also include a makeup tank which provides a gravity flow makeup water source which is not dependent on ac electrical power.

5.18.3 Mode of Operation. The isolation condenser system (BWR) is in operation whenever the normal means of removing decay heat from the reactor are not available.

5.18.4 Major Interfacing Systems

Reactor Recirculation System (BWR)	AD
Condensate Storage and Transfer System	KA
Fire Protection System (Water)	KP

5.18.5 Major Equipment

Isolation Condenser
Makeup Tank
Isolation Valves

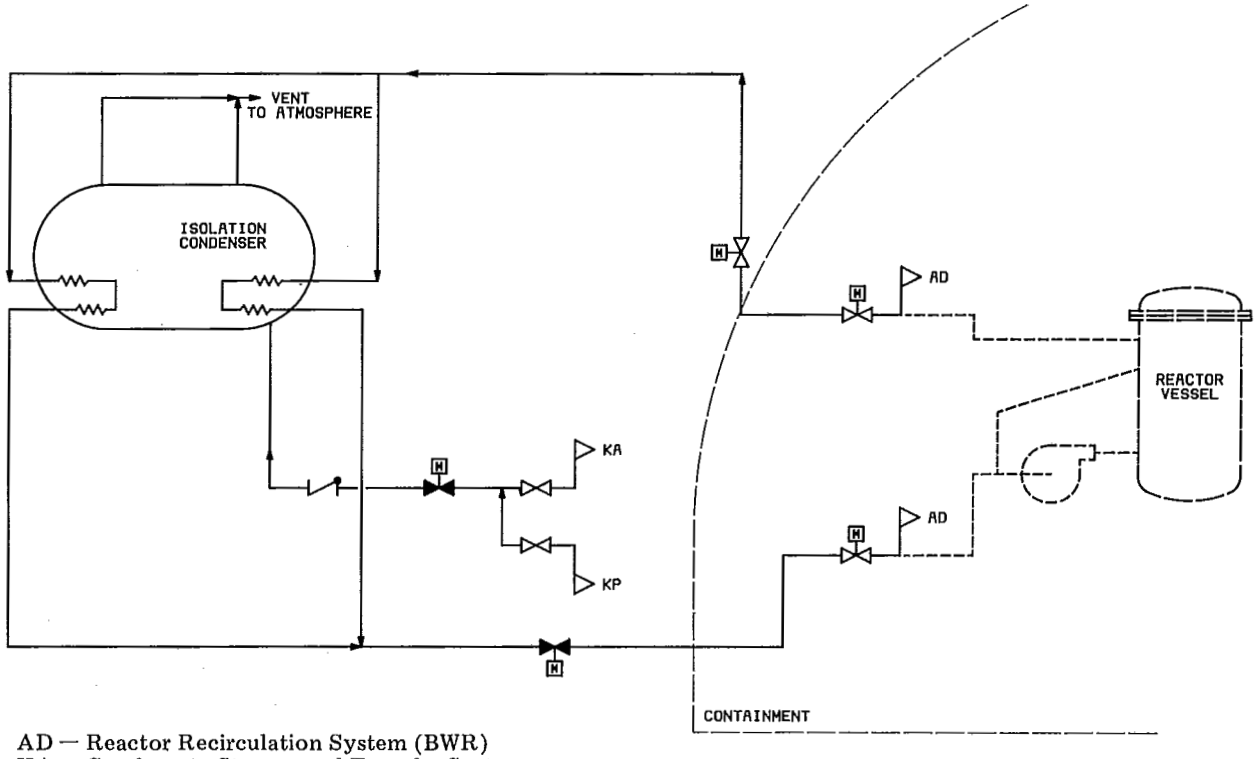

AD — Reactor Recirculation System (BWR)
KA — Condensate Storage and Transfer System
KP — Fire Protection System (Water)

NOTE: Some designs include a makeup tank.

Fig 16
Isolation Condenser System (BWR) — BL

Copyright The Institute of Electrical and Electronics Engineers, Inc.
Provided by IHS under license with IEEE
No reproduction or networking permitted without license from IHS

Not for Resale

5.19 Low Pressure Core Spray System (BWR)—BM

5.19.1 System Function. The low pressure core spray system (BWR) prevents fuel cladding damage in the event the core is uncovered following a loss of coolant accident (LOCA).

5.19.2 System Description. The low pressure core spray system (BWR) prevents fuel cladding damage following a LOCA by directing jets of water down into the fuel assemblies from spray nozzles mounted in a sparger ring located above the reactor core. The system is an integral part of the emergency core cooling systems which provides for adequate core cooling for all rates of coolant loss from the reactor. The system automatically goes into operation once the reactor vessel pressure has been reduced and the operation of the other systems of the emergency core cooling systems prove inadequate to maintain the necessary water level in the reactor vessel at the reduced vessel pressure.

The system includes a sparger ring(s) with spray nozzles located in the reactor vessel above the core, a motor-driven pump(s), motor-operated valves, piping, mechanical valves, and instrumentation. The system is connected to the suppression pool for its supply of cooling water and is connectable to the residual heat removal/low pressure coolant injection system (BWR) or the condensate storage and transfer system for testing and flushing. The system pump is protected from overheating during operation against high pressure by a low flow bypass line to the suppression pool.

5.19.3 Mode of Operation. The low pressure core spray system (BWR) operates only following a LOCA.

5.19.4 Major Interfacing Systems

Reactor Recirculation System (BWR)	AD
Condensate Storage and Transfer System	KA
Residual Heat Removal/Low Pressure Coolant Injection System (BWR)	BO
Medium Voltage Power System—Class 1E	EB

5.19.5 Major Equipment

Low Pressure Core Spray Pump(s)
Strainers
Core Spray Sparger(s)

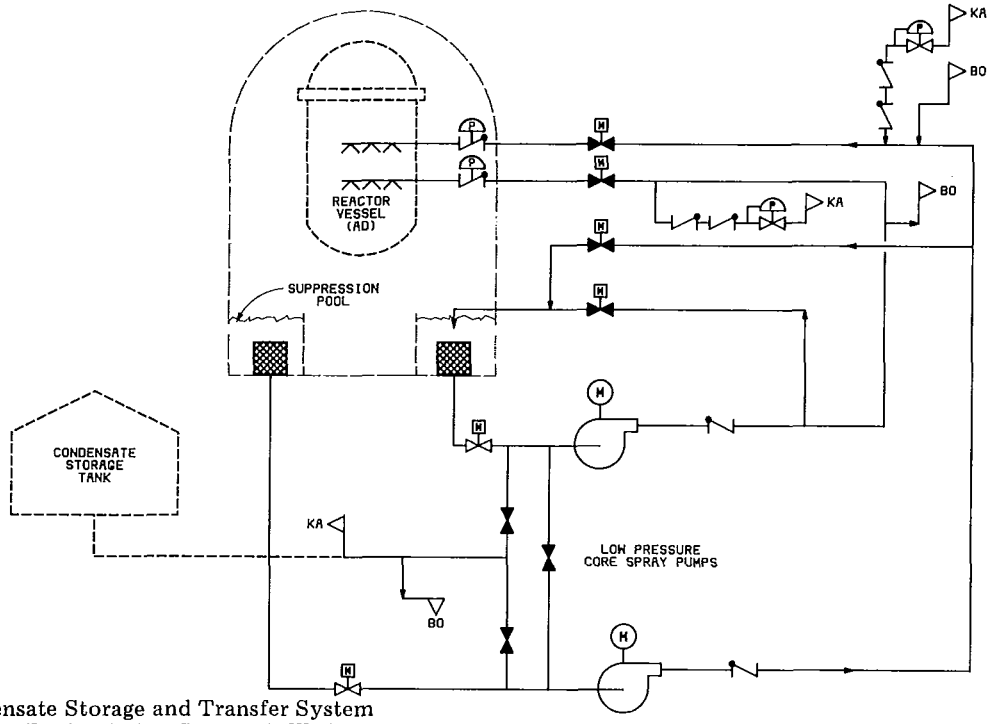

KA — Condensate Storage and Transfer System
AD — Reactor Recirculation System (BWR)
BO — Residual Heat Removal/Low Pressure Coolant Injection System (BWR)

NOTE: Some designs include only one low pressure core spray pump and associated flow path.

Fig 17
Low-Pressure Core Spray System (BWR) — BM

Copyright The Institute of Electrical and Electronics Engineers, Inc.
Provided by IHS under license with IEEE
No reproduction or networking permitted without license from IHS

 Not for Resale

5.20 Reactor Core Isolation Cooling System (BWR)—BN

5.20.1 System Function. The reactor core isolation cooling system (BWR) provides a source of emergency cooling water for the reactor vessel in the event of a loss of normal feedwater flow.

5.20.2 System Description. The reactor core isolation cooling system (BWR) performs a safety-related operation. Following a reactor scram, steam production within the reactor vessel will continue for a period of time due to reactor core fission product decay. Normally, the steam thus produced is routed to the main condenser; and the condensate system and the feedwater system continue to provide the necessary cooling water for decay heat removal until the reactor cools to the point where residual heat removal/low pressure coolant injection system (BWR) operation can commence. If for some reason the steam flow to the main condenser is prevented, such as main steam isolation valve closure, reactor vessel pressure will increase to the point where the safety-relief valves will open and vent steam to the suppression pool. This action will cause the water level within the reactor to drop. The water level will also drop if feedwater flow to the reactor fails. When the water level within the reactor falls to a set level, the reactor core isolation cooling system operation is automatically initiated. When this occurs, the decay heat steam is routed to the reactor core isolation cooling pump turbine thus operating the pump; the turbine exhaust is routed to the suppression pool. The reactor core isolation cooling operation pump supplies makeup water to the reactor from one of two sources (in order of preference); the condensate storage tank or the suppression pool. The reactor core isolation cooling system (BWR) has sufficient water supply and operational capability to operate until the reactor temperature and pressure are low enough for residual heat removal/low pressure coolant injection system (BWR) operation. The reactor core isolation cooling system (BWR) also operates in conjunction with the residual heat removal/low pressure coolant injection system in the steam condensing mode.

5.20.3 Mode of Operation. The reactor core isolation cooling system (BWR) operates whenever the reactor is in hot standby and normal feedwater flow is not available.

5.20.4 Major Interfacing Systems

Residual Heat Removal/Low Pressure Coolant Injection (BWR)	BO
Condensate Storage and Transfer System	KA
Reactor Recirculation System (BWR)	AD
Main/Reheat Steam System	SB
Auxiliary Steam System	SA
Low Voltage Power System—Class 1E	ED

5.20.5 Major Equipment

Reactor Core Isolation Cooling Pump, Turbine, and Lube Oil Cooler
Vacuum Pump
Condensate Pump
Vacuum Tank
Barometric Condenser
Strainers

Copyright The Institute of Electrical and Electronics Engineers, Inc.
Provided by IHS under license with IEEE
No reproduction or networking permitted without license from IHS
Not for Resale

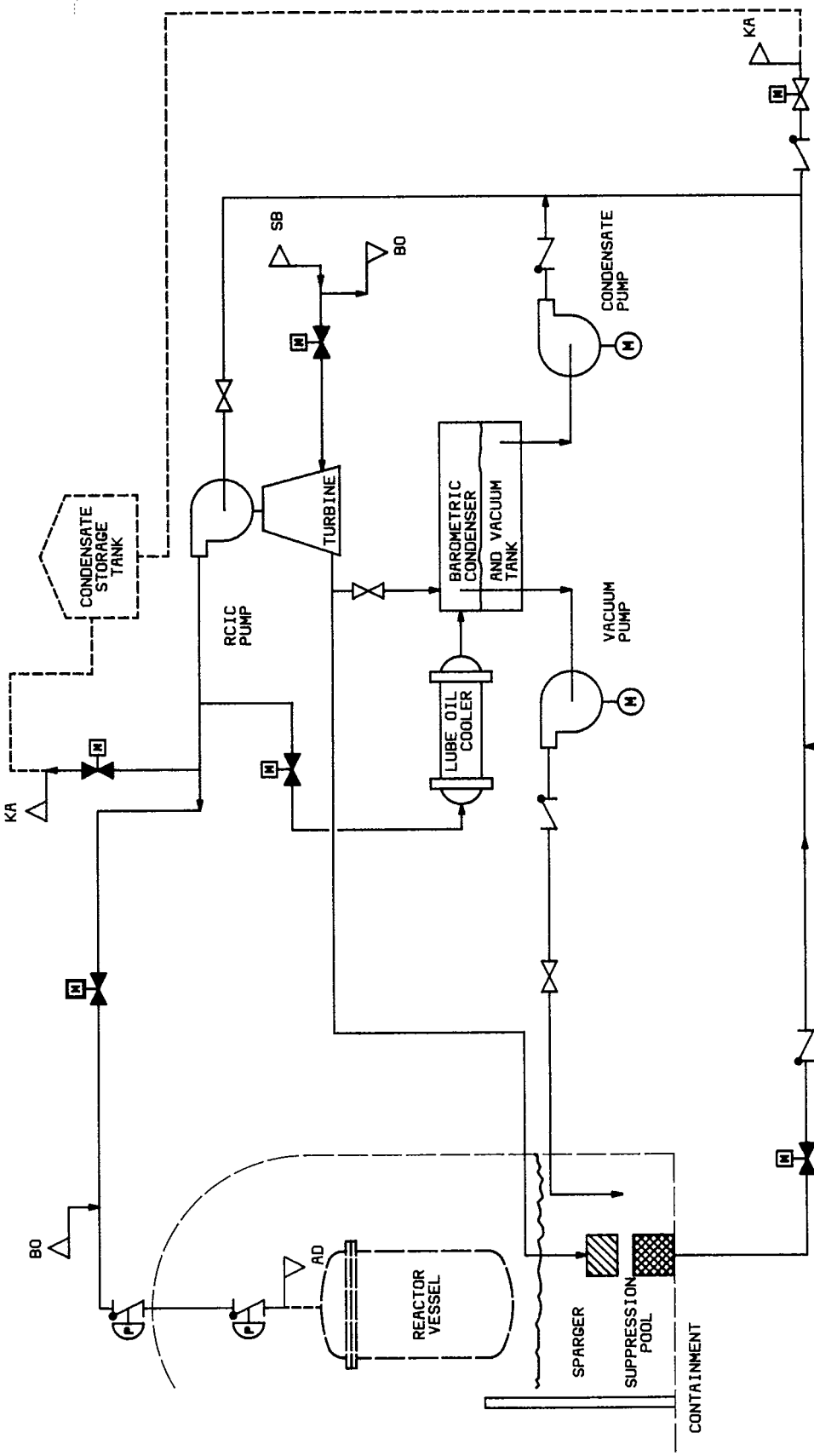

AD — Reactor Recirculation System (BWR)
BO — Residual Heat Removal/Low Pressure Coolant Injection System (BWR)
SB — Main/Reheat Steam System
KA — Condensate Storage and Transfer System

Fig 18
Reactor Core Isolation Cooling System (BWR) — BN

Copyright The Institute of Electrical and Electronics Engineers, Inc.
Provided by IHS under license with IEEE
No reproduction or networking permitted without license from IHS

Not for Resale

5.21 Residual Heat Removal/Low Pressure Coolant Injection System (BWR)—BO

5.21.1 System Function. The residual heat removal/low pressure coolant injection system (BWR) removes decay and sensible heat from the reactor during shutdown, accident, and refueling conditions. The system also cools the suppression pool and the containment and maintains the required water level in the reactor vessel following a loss of coolant accident (LOCA).

5.21.2 System Description. The residual heat removal/low pressure coolant injection system (BWR) consists of three or more residual heat removal pumps, two or more residual heat removal heat exchangers, containment spray spargers, and associated piping, valves, controls, and instrumentation.

The system operates in five basic operating modes to satisfy the system's design objectives.

(1) The low pressure coolant injection mode supplies suppression pool makeup water to the reactor vessel in the event of a LOCA, thus maintaining an adequate water level in the reactor.

(2) The suppression pool cooling mode prevents the suppression pool water temperature from exceeding a predetermined limit by circulating its water through the residual heat removal heat exchangers.

(3) The reactor steam condensing mode is used in conjunction with operation of the reactor core isolation cooling system (BWR) to condense reactor steam in the residual heat removal heat exchangers, thus making it possible to maintain the reactor in hot standby when it is isolated from the main condenser (not all designs).

(4) The shutdown cooling mode removes residual heat from the reactor core (after the reactor has been shutdown for refueling or servicing) by circulating its water through the residual heat removal heat exchangers.

(5) The containment spray cooling mode prevents overpressurization of the containment following a LOCA.

The residual heat removal/low pressure coolant injection system (BWR) may also be used to supplement the cooling capability of the fuel pool cooling and purification system.

5.21.3 Mode of Operation. The residual heat removal/low pressure coolant injection system (BWR) operates during shutdown, accident and refueling conditions.

5.21.4 Major Interfacing Systems

Essential Service Water System	BI
Fuel Pool Cooling and Purification System	DA
Reactor Core Isolation Cooling System (BWR)	BN
Reactor Recirculation System (BWR)	AD
Low Pressure Core Spray System (BWR)	BM
Medium Voltage Power System—Class 1E	EB
Essential Air System	LE
Nitrogen Supply System	LK

5.21.5 Major Equipment

Residual Heat Removal Pumps
Residual Heat Removal Heat Exchangers
Containment Spray Spargers
Strainers

Copyright The Institute of Electrical and Electronics Engineers, Inc.
Provided by IHS under license with IEEE
No reproduction or networking permitted without license from IHS Not for Resale

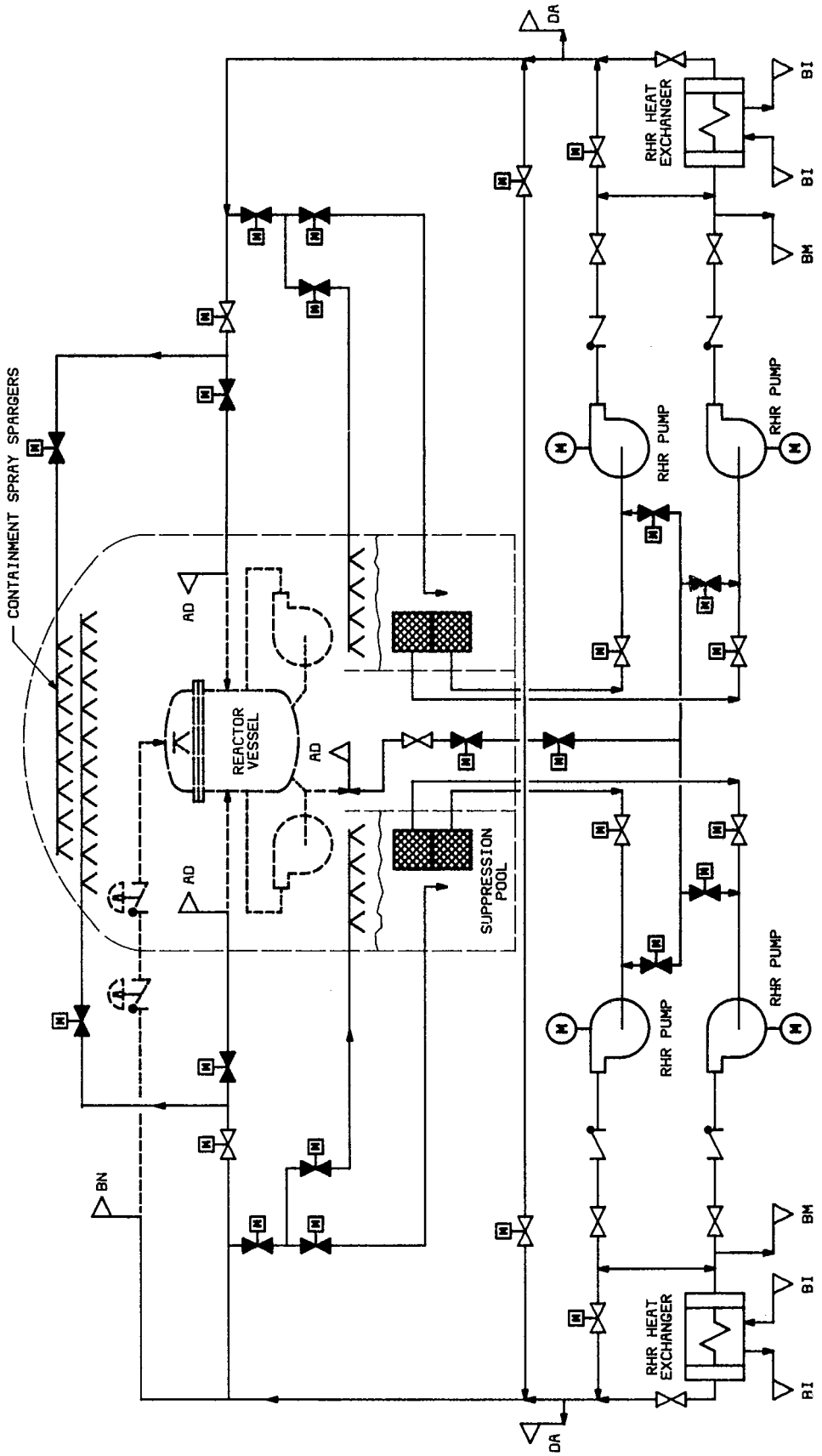

AD — Reactor Recirculation System (BWR)
BI — Essential Service Water System
BM — Low Pressure Core Spray System (BWR)
BN — Reactor Core Isolation Cooling System (BWR)
DA — Fuel Pool Cooling and Purification System

Fig 19
Residual Heat Removal/Low-Pressure Coolant Injection System (BWR) — BO

Copyright The Institute of Electrical and Electronics Engineers, Inc.
Provided by IHS under license with IEEE
No reproduction or networking permitted without license from IHS

Not for Resale

5.22 Residual Heat Removal/Low Pressure Safety Injection System (PWR)—BP

5.22.1 System Function. The residual heat removal/low pressure safety injection system (PWR) removes heat energy from the reactor core and reactor coolant system (PWR) during plant cooldown and refueling operations and following an accident such as a loss of coolant accident (LOCA) when reactor cooling system pressure is sufficiently low.

5.22.2 System Description. A typical residual heat removal/low pressure safety injection system (PWR) consists of two redundant, full capacity cooling loops, which each include a pump, a heat exchanger, and associated valves, piping, and instrumentation.

The normal function of the residual heat removal/low pressure safety injection system (PWR) is cooldown of the reactor coolant system (PWR) after the steam generators are no longer effective and to maintan the desired reactor coolant system (PWR) temperature during cold shutdown and refueling operations. In this operating mode, the residual heat removal pumps take suction from the reactor coolant system (PWR) hot legs and discharge through the residual heat removal heat exchangers back to the reactor coolant system (PWR) cold legs. Heat is removed in the residual heat removal heat exchangers by the closed/component cooling water system.

The residual heat removal/low pressure safety injection system (PWR) also provides long-term decay heat removal and the low pressure safety injection function following an accident such as a LOCA. Immediately following a LOCA, the residual heat removal pumps automatically start and pump water from the refueling water storage tank into the reactor coolant system (PWR). Low pressure injection continues until a low level is reached in the refueling water storage tank. At this time, the residual heat removal pump suctions are switched to the containment sump. This provides for long-term core cooling by recirculating, and cooling in the residual heat removal heat exchangers, water between the containment sump and the reactor vessel.

For large break LOCAs, the safety injection tanks also provide cooling water to the core by flooding the core when the reactor coolant system (PWR) pressure drops below the pressure maintained in the safety injection tanks (usually 600 lb/in^2).

The residual heat removal/low pressure safety injection system (PWR) may also be used to transfer water between the refueling water storage tank and the refueling pool at the beginning and end of refueling operations.

5.22.3 Mode of Operation. The residual heat removal/low pressure safety injection system (PWR) operates during cooldown, cold shutdown, refueling, and accident conditions.

5.22.4 Major Interfacing Systems

Reactor Coolant System (PWR)	AB
Containment Spray System (PWR)	BE
Closed/Component Cooling Water System	CC
High Pressure Safety Injection System (PWR)	BQ
Engineered Safety Features Actuation System	JE
Medium Voltage Power System—Class 1E	EB
Essential Air System	LE
Nitrogen Supply System	LK
*Chemical and Volume Control/Makeup and Purification System (PWR)	CB

*Interfaces only when charging pumps are used.

5.22.5 Major Components

Residual Heat Removal Pumps
Residual Heat Removal Heat Exchangers
Safety Injection Tanks
Refueling Water Storage Tanks

Copyright The Institute of Electrical and Electronics Engineers, Inc.
Provided by IHS under license with IEEE
No reproduction or networking permitted without license from IHS
Not for Resale

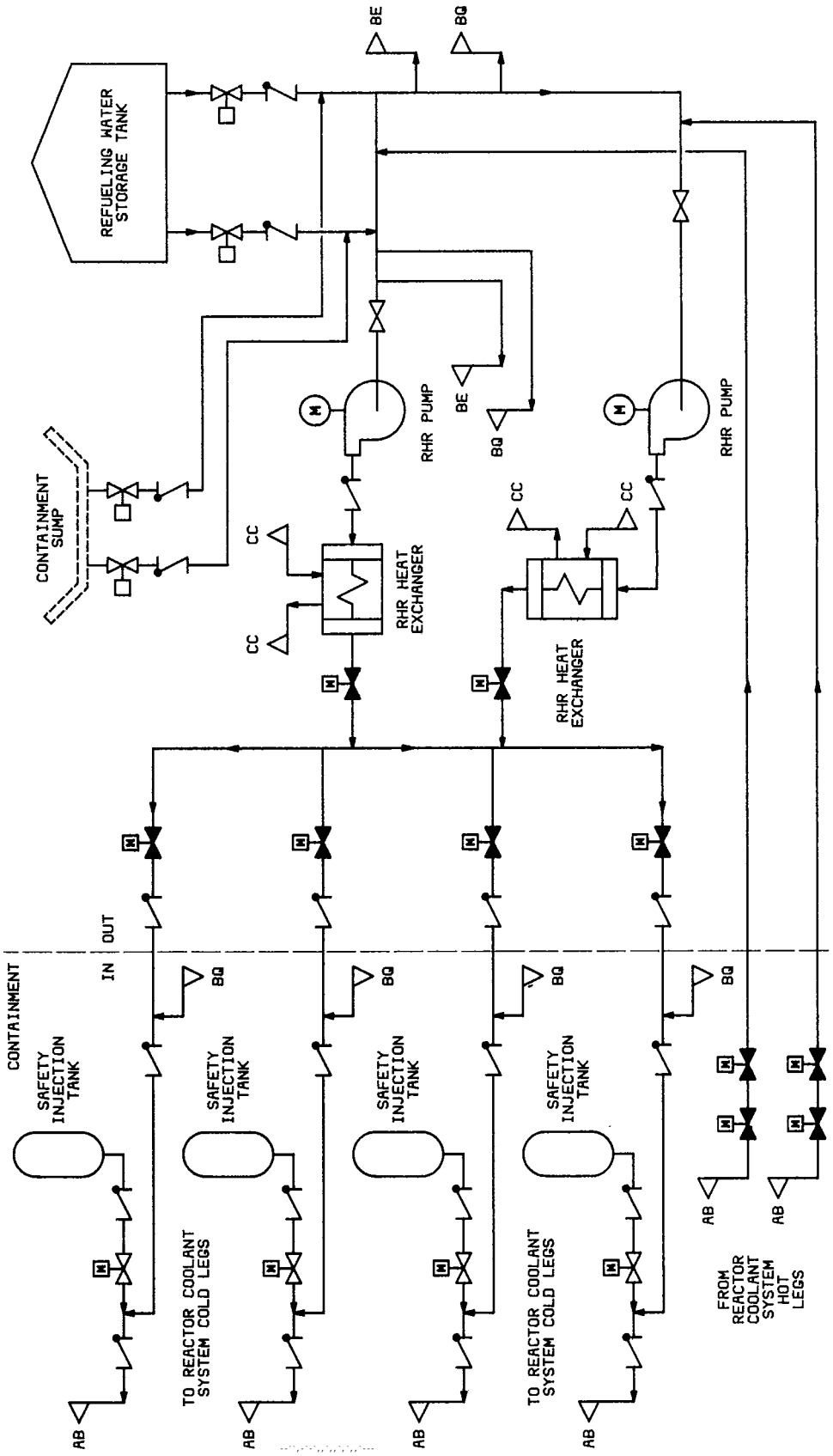

AB — Reactor Coolant System (PWR)
BE — Containment Spray System (PWR)
BQ — High Pressure Safety Injection System (PWR)
CC — Closed/Component Cooling Water System

Fig 20
Residual Heat Removal/Low-Pressure Safety Injection System (PWR) — BP

Copyright The Institute of Electrical and Electronics Engineers, Inc.
Provided by IHS under license with IEEE
No reproduction or networking permitted without license from IHS

Not for Resale

5.23 High Pressure Safety Injection System (PWR)—BQ

5.23.1 System Function. The high pressure safety injection system (PWR) injects borated water into the reactor coolant system to flood and cool the reactor core following a loss of coolant accident (LOCA) which does not result in rapid depressurization of the reactor coolant system.

5.23.2 System Description. The high pressure safety injection system (PWR) consists of two redundant, full-capacity injection trains and associated valves, piping, and instrumentation. Each high pressure safety injection train consists of a high pressure safety injection pump and associated suction and discharge paths. For some PWR designs, the high pressure safety injection pump function is performed by the chemical and volume control system charging pumps.

The high pressure safety injection system (PWR) also includes emergency boration equipment when included as separate equipment in the design. This equipment functions to inject concentrated boric acid into the reactor coolant system following a main steam line break accident to maintain the reactor core in a subcritical condition. Emergency boration equipment may include boron injection tanks and pumps and associated valves, piping, and instrumentation.

For some designs, the high pressure safety injection system (PWR) may also include upper head injection equipment, which injects cooling water through the reactor vessel head following a LOCA. This equipment includes water and nitrogen accumulators and associated injection valves and piping.

Following a LOCA, the high pressure safety injection system (PWR) is automatically initiated. The high pressure safety injection pumps take suction from the refueling water storage tank and provide borated water to the reactor coolant system to cool the reactor core, thus preventing a significant amount of fuel cladding failure and release of radioactive fission products to the containment. When the refueling water storage tank borated water inventory is near depletion, the suction of the high pressure safety injection pumps is switched to the containment sump.

5.23.3 Mode of Operation. The high pressure safety injection system (PWR) operates only in the event of an accident.

5.23.4 Major Interfacing Systems

Reactor Coolant System (PWR)	AB
Containment Spray System (PWR)	BE
Residual Heat Removal/Low Pressure Safety Injection System (PWR)	BP
Closed/Component Cooling Water System	CC
Engineered Safety Features Actuation System	JE
Medium Voltage Power System—Class 1E	EB
*Chemical and Volume Control/Makeup and Purification System	CB

*Interfaces only when charging pumps are used.

5.23.5 Major Components

High Pressure Safety Injection System (PWR) Pumps
Boron Injection Tanks (not all designs)
Boron Injection Pumps (not all designs)
Upper Head Injection Accumulators (not all designs)

Copyright The Institute of Electrical and Electronics Engineers, Inc.
Provided by IHS under license with IEEE
No reproduction or networking permitted without license from IHS
Not for Resale

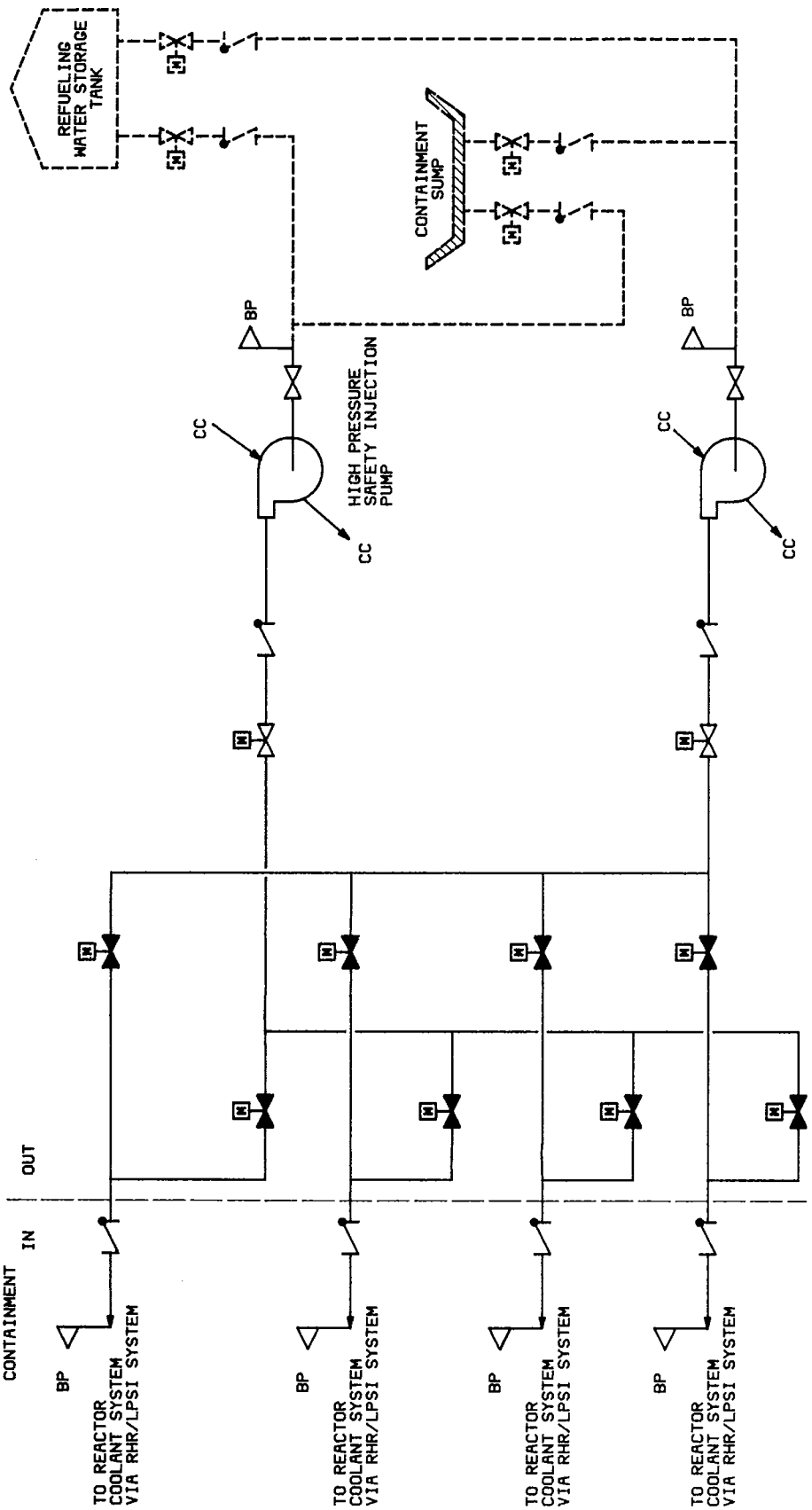

BP — Residual Heat Removal/Low Pressure Safety Injection System (PWR)
CC — Closed/Component Cooling Water System

NOTE: System scope includes the emergency boration function when separate equipment is included in the design (boron injection tanks, boron injection pumps, etc).

Fig 21
High-Pressure Safety Injection System (PWR) — BQ

Copyright The Institute of Electrical and Electronics Engineers, Inc.
Provided by IHS under license with IEEE
No reproduction or networking permitted without license from IHS

Not for Resale

5.24 Standby Liquid Control System (BWR)—BR

5.24.1 System Function. The standby liquid control system (BWR) provides an emergency backup means of shutting down the reactor.

5.24.2 System Description. The standby liquid control system (BWR) provides a means of shutting down the reactor by injecting a neutron absorbing boron solution (sodium pentaborate) into the reactor. This method of shutdown is used only in the unlikely event that a sufficient number of control rods cannot be inserted into the core to accomplish a normal reactor shutdown. The system is manually actuated from the control room. Upon actuation, the standby liquid control pumps start, the motor-operated pump suction valves open, and the explosive valves fire to open. The standby liquid control pumps then pump the contents of the sodium pentaborate storage tank into the reactor vessel.

5.24.3 Mode of Operation. The standby liquid control system (BWR) is operated only in the event of an emergency.

5.24.4 Major Interfacing Systems

Reactor Recirculation System (BWR) AD

5.24.5 Major Equipment

Standby Liquid Control Pumps
Sodium Pentaborate Storage Tank
Explosive Valves
Test Tank

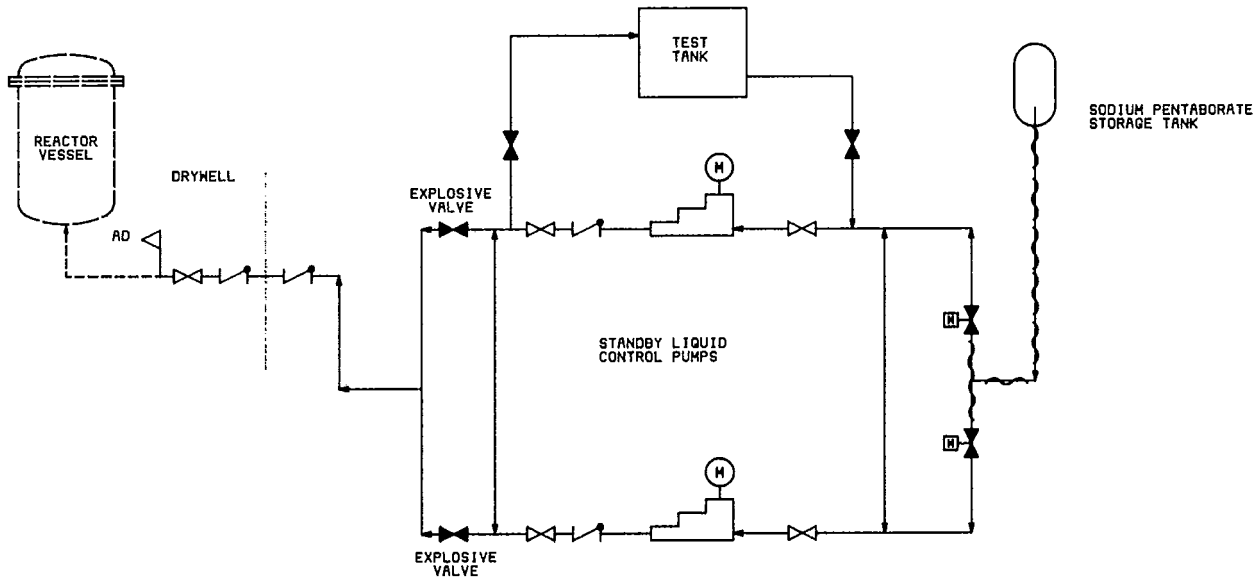

AD — Reactor Recirculation System (BWR)

Fig 22
Standby Liquid Control System (BWR) — BR

Copyright The Institute of Electrical and Electronics Engineers, Inc.
Provided by IHS under license with IEEE
No reproduction or networking permitted without license from IHS

Not for Resale

5.25 Ultimate Heat Sink System—BS

5.25.1 System Function. The ultimate heat sink system dissipates sensible and decay heat during a safe shutdown and cooldown of the reactor or following an accident.

5.25.2 System Description. The ultimate heat sink system removes heat from the essential service water system following a loss of the normal plant heat sink, following a loss of normal plant ac electrical power, or in the event of an accident.

The ultimate heat sink system may be any one or a combination of the following conditions depending upon the site specific design: a natural body of water (river, lake, ocean), a man-made cooling reservoir, cooling towers, or a spray pond. The ultimate heat sink system provides at least a 30-day supply of water to replenish evaporation and other losses in the event of a safe shutdown and cooldown of the reactor. The ultimate heat sink system is sized so as to maintain the design essential service water system temperature following a safe shutdown and cooldown or an accident.

5.25.3 Mode of Operation. The ultimate heat sink system operates during safe shutdown and accident conditions. Depending on the plant design, the system may also operate during normal plant conditions.

5.25.4 Major Interfacing Systems

Essential Service Water System	BI
Heat Rejection Chemical Treatment System	KF

5.25.5 Major Equipment (Dependent on Site Specific Design)

Cooling Towers
Spray Ponds
Retaining Structures
Water Storage Basin
Intake and Discharge Canals

5.26 Suppression Pool Makeup System (BWR)—BT

5.26.1 System Function. The suppression pool makeup system (BWR) provides suppression pool makeup water following a loss of coolant accident (LOCA).

5.26.2 System Description. Following a LOCA, the system provides suppression pool makeup water from the upper containment pool by way of a pair of redundant 100% capacity dump lines. This is provided to maintain proper water level above the pool drywell vent openings and to account for postaccident water entrapment. Upper containment pool dump is initiated either manually or automatically.

5.26.3 Mode of Operation. The suppression pool makeup system (BWR) operates following an accident.

5.26.4 Major Interfacing Systems

Reactor Containment Building	NH

5.26.5 Major Equipment

Upper Containment Pool Dump Valves
Level Instrumentation

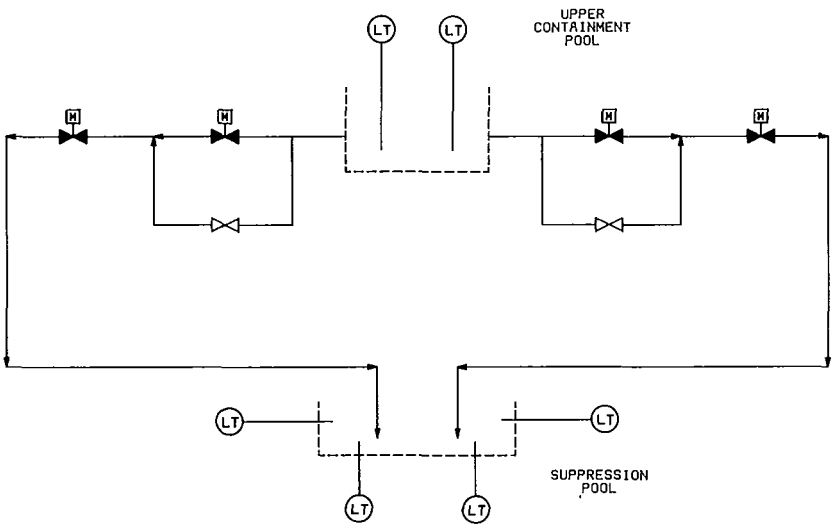

Fig 23
Suppression Pool Makeup System (BWR) — BT

Copyright The Institute of Electrical and Electronics Engineers, Inc.
Provided by IHS under license with IEEE
No reproduction or networking permitted without license from IHS

Not for Resale

5.26.6 Reactor Auxiliaries Systems Group

Table 5

	Reactor Auxiliaries Systems Group	Plant Type		Revision
CA	Boron Recycle System (PWR)		P	
CB	Chemical and Volume Control/Makeup and Purification System (PWR)		P	
CC	Closed/Component Cooling Water System	B	P	
CD	Control Rod Drive Cooling System (PWR)		P	
CE	Reactor Water Cleanup System (BWR)	B		
CF	Reactor Services System	B	P	
CG	Suppression Pool Purification System (BWR)	B		

B—BWR P—PWR

5.27 Boron Recycle System (PWR)—CA

5.27.1 System Function. The boron recycle system (PWR) collects reactor grade water from various sources and processes this water into borated and nonborated water for reuse within the reactor coolant system.

5.27.2 System Description. A typical boron recycle system (PWR) consists of several tanks for the collection and storage of reactor grade water until batch processing can take place; several pumps, filters, and strainers for moving the liquid about; ion exchangers for removing dissolved impurities; a gas stripper for removal of dissolved gases; and a boric acid concentrator to increase the boron concentration in a portion of the recovered water to that required for boric acid makeup.

The boron recycle system normally collects most of its water from the reactor coolant system (PWR) by way of the chemical and volume control/makeup and purification system (PWR) letdown line. Reactor coolant system letdown is diverted to the boron recycle system (PWR) as a result of reactor control system boron concentration changes which are made for such operations as plant shutdown and startups, refueling, and dilutions for core burnup.

When a sufficient amount of water accumulates within either the reactor or equipment drain tanks, the liquid within the tank is pumped through a filter, ion exchanger, strainer, and gas stripper, and stored in the recycle holdup tank to await further processing. If there is any excess letdown flow from the reactor coolant system (PWR) bypassing the chemical and volume control/makeup and purification system (PWR) volume control tank, it is merged with that being pumped from the drain tanks at a point upstream of the ion exchanger. From the recycle holdup tank the water is pumped to a boric acid concentrator where the boric acid is concentrated in a portion of the water and sent to the chemical and volume control/makeup and purification system (PWR) boric acid tank. The portion of the water remaining after boric acid concentration is routed through an ion exchanger for removal of any residual boric acid and sent to the chemical and volume control/makeup and purification system (PWR) reactor makeup water tank.

5.27.3 Mode of Operation. The boron recycle system (PWR) operates whenever necessary to process accumulated reactor grade water.

5.27.4 Major Interfacing Systems

Chemical and Volume Control/Makeup and Purification System (PWR)	CB
Gaseous Waste Management System (PWR)	WE
Closed/Component Water System	CC
Reactor Coolant System (PWR)	AB

5.27.5 Major Components

Reactor Drain Tank
Equipment Drain Tank
Gas Stripper Package
Boric Acid Concentrator Package
Ion Exchangers
Recycle Holdup Tank(s)
Reactor Drain Pumps
Concentrator Feed Pumps

Copyright The Institute of Electrical and Electronics Engineers, Inc.
Provided by IHS under license with IEEE
No reproduction or networking permitted without license from IHS
Not for Resale

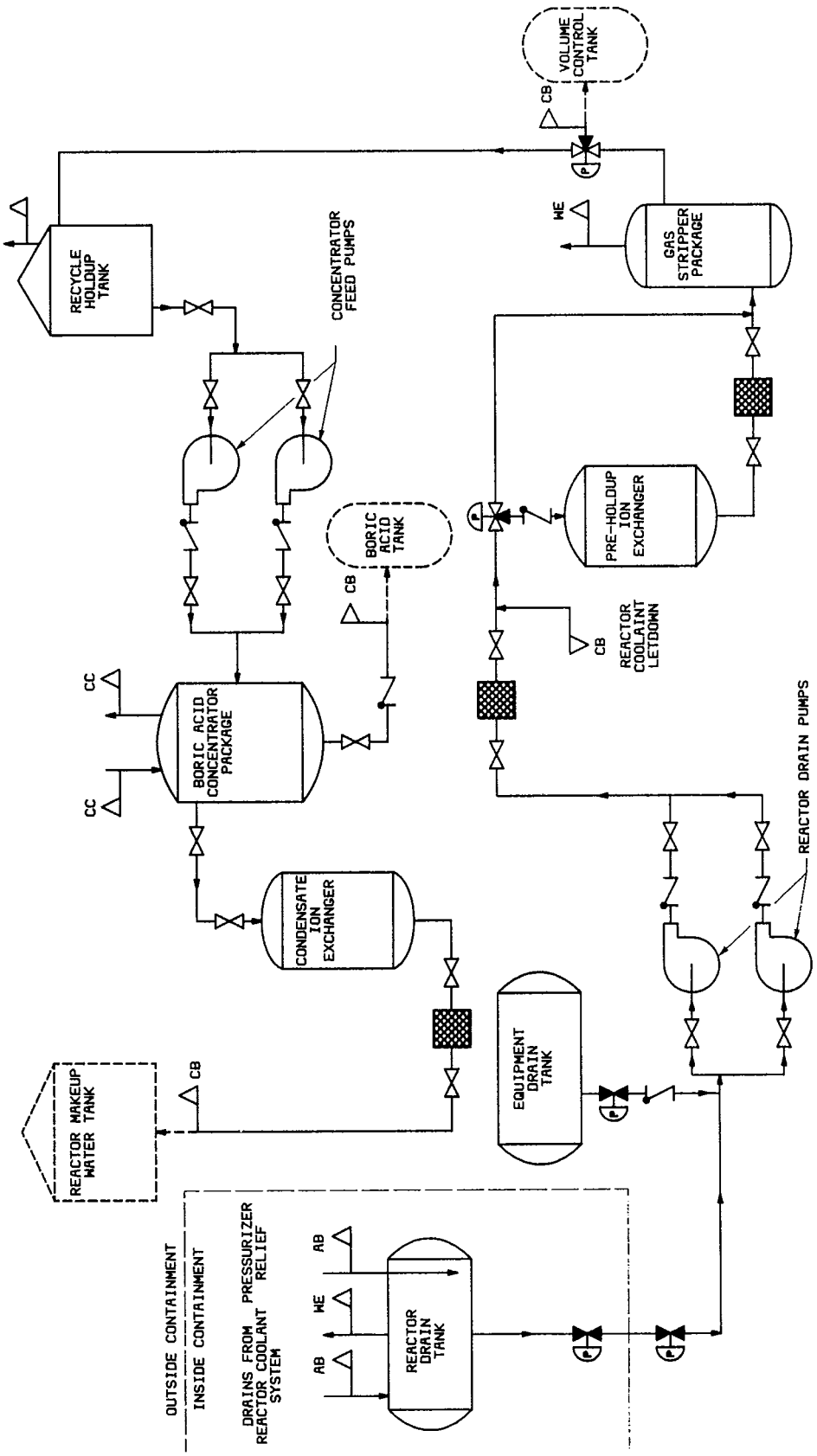

AB — Reactor Coolant System (PWR)
CB — Chemical and Volume Control/Makeup and Purification
CC — Closed/Component Cooling Water System
WE — Gaseous Waste Management System (PWR)

NOTE: Some designs include a separate pressurizer relief tank.

Fig 24
Boron Recycle System (PWR) — CA

Copyright The Institute of Electrical and Electronics Engineers, Inc.
Provided by IHS under license with IEEE
No reproduction or networking permitted without license from IHS
Not for Resale

5.28 Chemical and Volume Control/Makeup and Purification System (PWR)—CB

5.28.1 System Function. The chemical and volume control/makeup and purification system (PWR) performs the following major functions:

(1) Maintains the required water inventory in the reactor coolant system (PWR).

(2) Controls reactor coolant system water chemistry conditions.

(3) Provides seal water injection flow to the reactor coolant pump seals.

(4) Provides the high pressure safety injection pump function following a loss of coolant accident (LOCA) (not all PWRs).

5.28.2 System Description. The chemical and volume control/makeup and purification system (PWR) maintains and controls proper water inventory and water chemistry through a *feed and bleed* process whereby a small flow is tapped from the reactor coolant system (PWR), processed through a series of equipment, and then injected back into the reactor coolant system (PWR). For a typical system layout, the flow would be removed from the *cold leg* of one of the reactor coolant piping loops and routed through a regenerative heat exchanger and then on to a letdown heat exchanger. This reduces the temperature of the *letdown* flow to within the operating range of the ion exchange resins. From the letdown heat exchanger the flow is routed through purification or deborating ion exchangers, as required, and is then sprayed into a volume control tank. The volume control tank provides a volume reservoir for the charging pumps and controls reactor coolant hydrogen and fission product gas concentrations. Charging pumps remove water from the volume control tank and pump it through the regenerative heat exchanger and on to a *hot leg* of the reactor coolant system.

Boric acid tanks are used to store a rich boric acid solution. A reactor quality demineralized water supply is maintained in the reactor makeup water tank(s). Any desired reactor coolant system boron concentration may be obtained by mixing the proper portions of borated and nonborated water within the volume control tank and then pumping this mixture into the reactor coolant system (PWR) with the charging pumps. Reactor coolant system (PWR) boron concentration may also be reduced by use of the deborating ion exchangers (some designs use a boron thermal regeneration subsystem). A chemical addition unit may also be provided to feed chemical additives into the suction of the charging pumps for injection into the reactor coolant system (PWR).

The chemical and volume control/makeup and purification system (PWR) provides reactor coolant system (PWR) reactor coolant pump seal water. This water is provided from the charging pump discharge by way of seal injection filters. Reactor coolant pump seal leakoff is returned to the volume control tank through a seal water heat exchanger. The chemical and volume control/makeup and purification system (PWR) also provides auxiliary pressurizer spray for reactor coolant system pressure control when the reactor coolant pumps are not in operation.

5.28.3 Mode of Operation. The chemical and volume control/makeup and purification system (PWR) is in use during startup, normal power operation, and shutdown.

5.28.4 Major Interfacing Systems

Liquid Waste Management System	WD
Fuel Pool Cooling and Purification System	DA
Reactor Coolant System (PWR)	AB
Gaseous Waste Management System (PWR)	WE
Boron Recycle System (PWR)	CA
Closed/Component Cooling Water System	CC
Medium Voltage Power System	EA
Hydrogen Supply System	LJ
Nitrogen Supply System	LK
Solid Waste Management System	WB
*High Pressure Safety Injection System (PWR) (not all designs)	BQ
*Residual Heat Removal/Low Pressure Safety Injection System (PWR) (not all designs)	BP

*Only interfaces when charging pumps are used.

5.28.5 Major Components

Regenerative Heat Exchanger
Letdown Heat Exchanger(s)
Volume Control Tank
Charging Pumps
Purification Ion Exchangers
Deborating Ion Exchangers
Seal Water Heat Exchanger
Reactor Makeup Water Tank(s)
Reactor Makeup Water Pumps
Boric Acid Tank(s)
Boric Acid Transfer Pumps

Copyright The Institute of Electrical and Electronics Engineers, Inc.
Provided by IHS under license with IEEE
No reproduction or networking permitted without license from IHS
Not for Resale

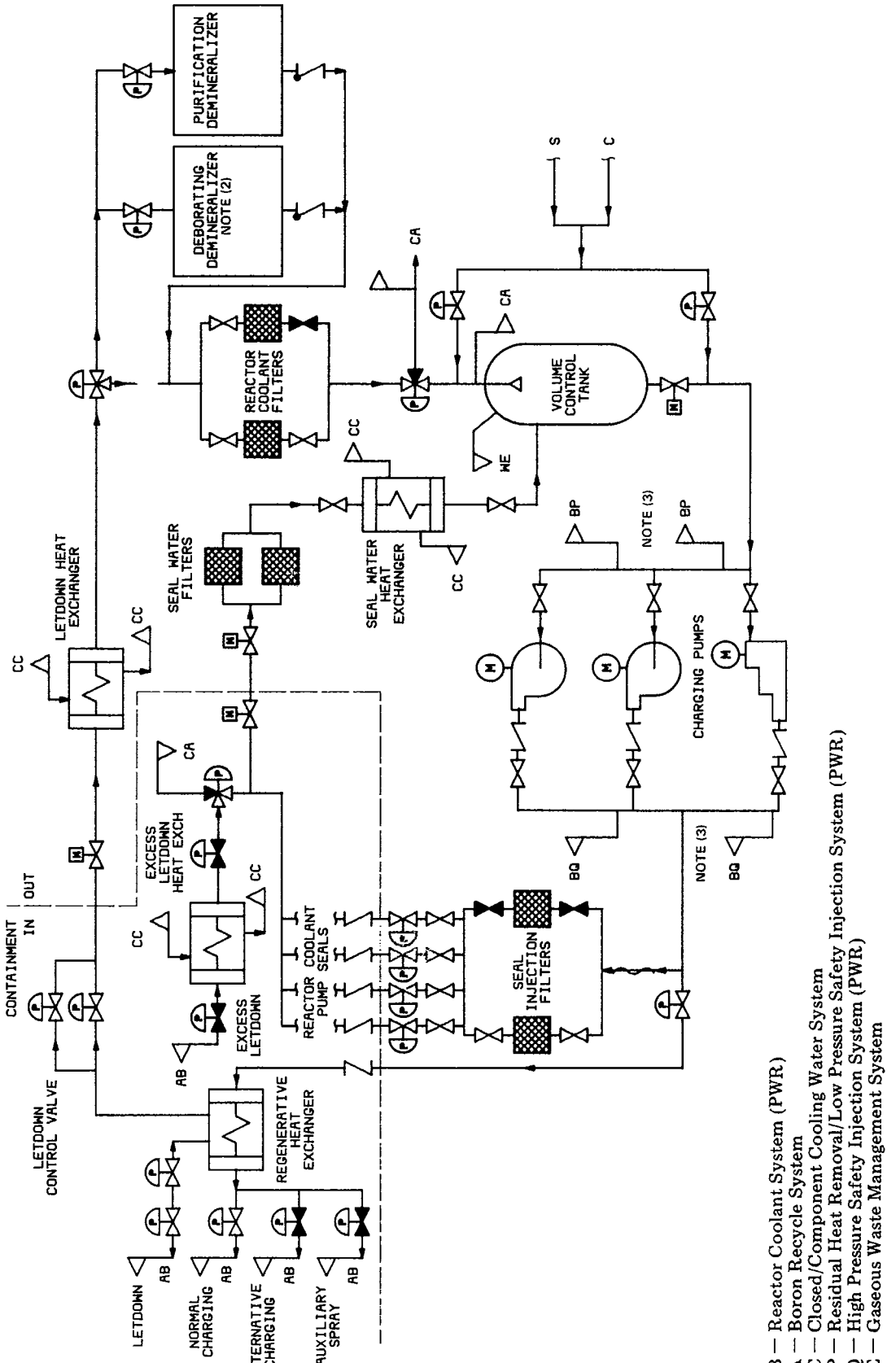

AB — Reactor Coolant System (PWR)
CA — Boron Recycle System
CC — Closed/Component Cooling Water System
BP — Residual Heat Removal/Low Pressure Safety Injection System (PWR)
BQ — High Pressure Safety Injection System (PWR)
WE — Gaseous Waste Management System

(a)

Fig 25
(a) Chemical and Volume Control/Makeup and Purification System (PWR) — CB

Copyright The Institute of Electrical and Electronics Engineers, Inc.
Provided by IHS under license with IEEE
No reproduction or networking permitted without license from IHS
Not for Resale

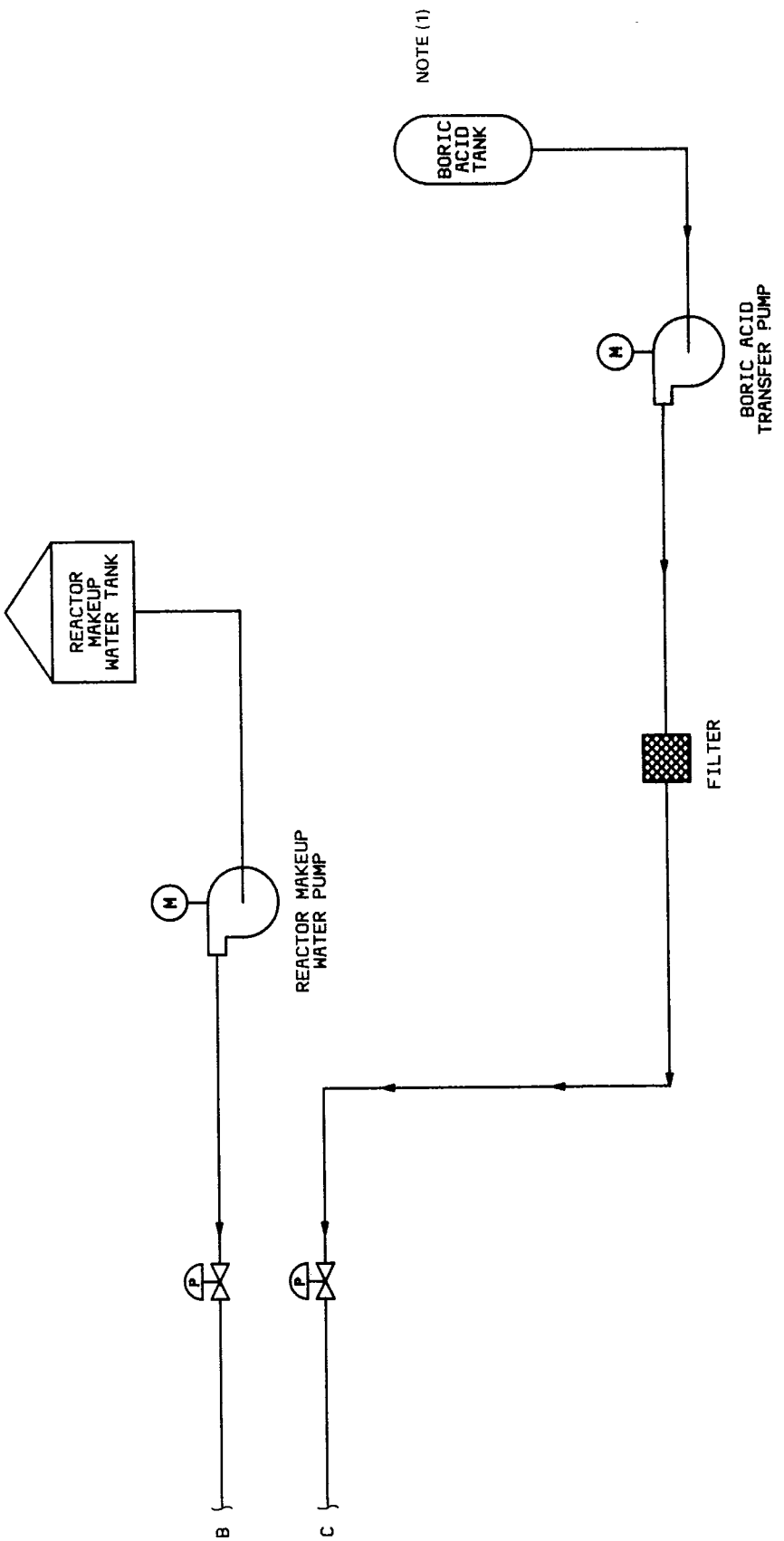

NOTES: (1) Some designs use the refueling water storage tank of the residual heat removal/low pressure safety injection system (PWR).
(2) Some designs include a boron thermal regeneration subsystem.
(3) Applicable to designs which use the chemical and volume control/makeup and purification system (PWR) charging pumps for high pressure safety injection.

(b)

Fig 25

(b) Chemical and Volume Control/Makeup and Purification System (PWR) — CB

Copyright The Institute of Electrical and Electronics Engineers, Inc.
Provided by IHS under license with IEEE
No reproduction or networking permitted without license from IHS

Not for Resale

5.29 Closed/Component Cooling Water—CC

5.29.1 System Function. The closed/component cooling water system provides high quality cooling water to equipment which contain radioactivity, thus providing a closed cooling loop barrier between the radioactive fluid and the essential service water system.

5.29.2 System Description. For a BWR, a typical closed/component cooling water system consists of a closed cooling water loop with redundant pumps and heat exchangers, a surge tank, and associated piping, valves, and controls. The closed/component cooling water system heat exchangers are cooled by the essential service water system. In the event of an accident, the essential service water system supply to the closed/component cooling water system heat exchangers is automatically isolated. The closed/component cooling water system may serve equipment which should continue to operate following a loss of normal plant ac electrical power. In this case, the closed/component cooling water system pumps are automatically connected to the standby diesel generators and the essential service water system cooling water is maintained to the closed/component cooling water system heat exchangers.

For a pressurized water reactor, the closed/component cooling water system also provides cooling water to essential equipment which is used for the safe shutdown of the reactor, or to prevent or mitigate the consequences of accidents. A typical closed/component cooling water system consists of two or more redundant cooling water loops which each include a pump, heat exchanger, surge tank, and associated valves, piping and controls. Each cooling water loop provides cooling for its associated division of essential equipment. The system also serves nonessential equipment. These cooling loads are automatically isolated in the event of an accident.

5.29.3 Mode of Operation. The closed/component cooling water system operates during normal startup, shutdown, and accident conditions.

5.29.4 Major Interfacing Systems. The following list of interfacing systems includes typical cooling loads which vary according to station design.

Reactor Coolant System (PWR)	AB
Residual Heat Removal/Low Pressure Safety Injection System (PWR)	BP
Essential Service Water System	BI
Chemical and Volume Control/Makeup and Purification System (PWR)	CB
Fuel Pool Cooling and Purification System	DA
High Pressure Safety Injection System (PWR)	BQ
Containment Spray System (PWR)	BE
Auxiliary/Emergency Feedwater System (PWR)	BA
Boron Recycle System (PWR)	CA
Steam Generator Blowdown System (PWR)	WI
Liquid Waste Management System	WD
Instrument Air Supply System	LD
Reactor Recirculation System (BWR)	AD
Reactor Water Cleanup System (BWR)	CE
Control Rod Drive System (BWR)	AA
Equipment and Floor Drains System	WK
Sampling and Water Quality System	KN
Leak Monitoring System	IJ
Engineered Safety Features Actuation System	JE

5.29.5 Major Equipment

Closed/Component Cooling Water Pumps
Closed/Component Cooling Water Heat Exchangers
Surge Tanks

5.29.6 Typical Closed/Component Cooling Water System Cooling Loads

5.29.6.1 PWR Essential Loads

Reactor Coolant Pumps
Residual Heat Removal Heat Exchangers
Residual Heat Removal Pumps
Chemical and Volume Control/Makeup and Purification Charging Pumps
Fuel Pool Cooling and Purification Heat Exchangers
Containment Spray Pumps
Auxiliary/Emergency Feedwater Pumps
Containment Fan Coolers
High Pressure Safety Injection Pumps

Copyright The Institute of Electrical and Electronics Engineers, Inc.
Provided by IHS under license with IEEE
No reproduction or networking permitted without license from IHS
Not for Resale

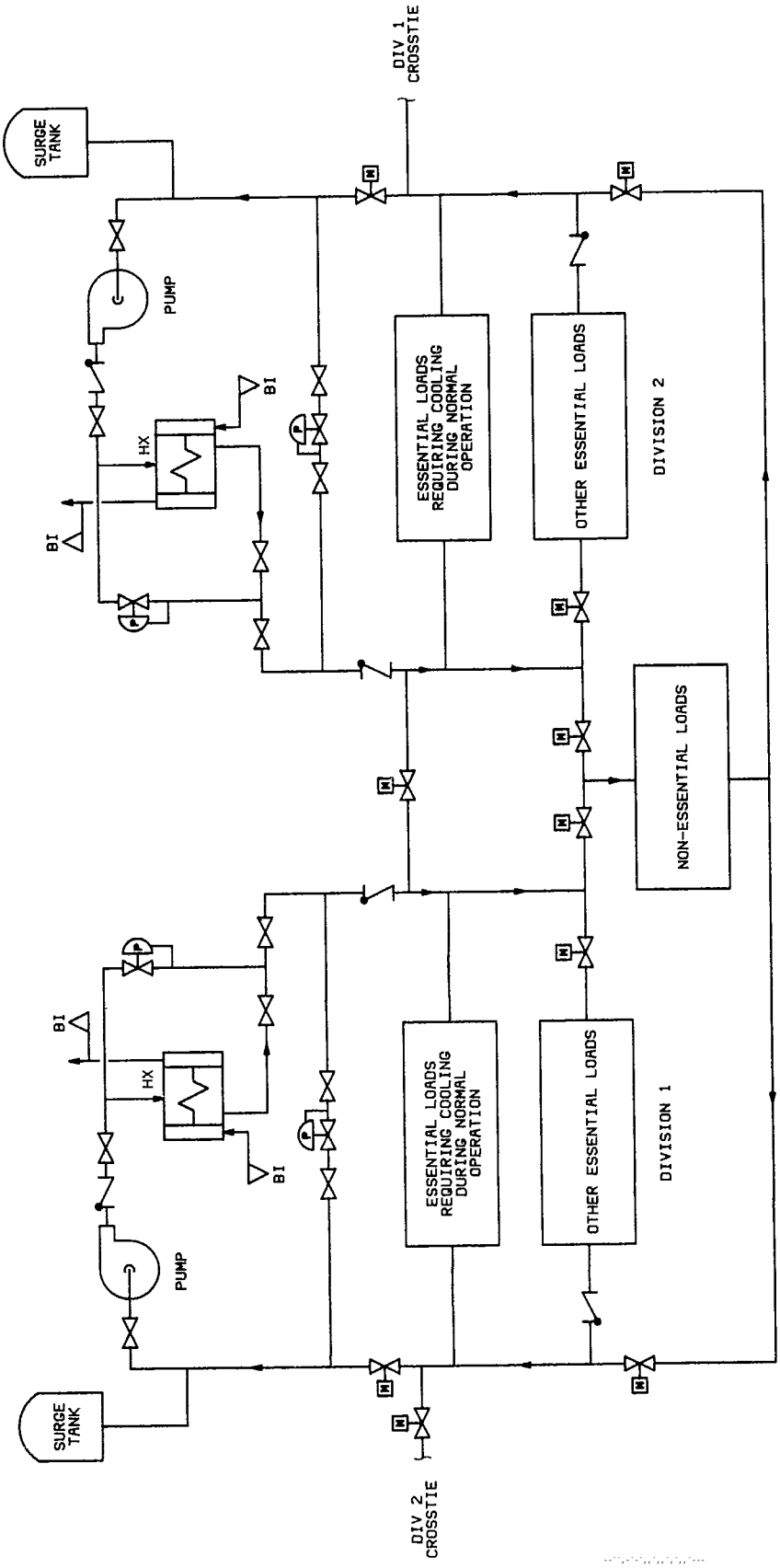

BI — Essential Service Water System

NOTES: (1) Some designs may include a Division 3 Cooling Loop.
(2) Drawing typical for a PWR.

Fig 26
Closed/Component Cooling Water System — CC

Copyright The Institute of Electrical and Electronics Engineers, Inc.
Provided by IHS under license with IEEE
No reproduction or networking permitted without license from IHS
Not for Resale

5.29.6.2 PWR Nonessential Loads

Letdown Heat Exchanger
Reactor Coolant Pump Seal Water Heat Exchanger
Boron Recycle System Concentrator Package
Steam Generator Blowdown Heat Exchanger
Primary Sample Coolers
Liquid Waste Management System Evaporator Packages
Instrument Air Compressors
Boron Recycle System Gas Stripper Package

5.29.6.3 BWR Loads

Reactor Recirculation Pumps
Reactor Water Cleanup System Nonregenerative Heat Exchanger
Reactor Water Cleanup System Pumps
Primary Sample Coolers
Control Rod Drive Pumps
Drywell and Containment Equipment Drain Sump Coolers
Instrument Air Compressors
Liquid Waste Management System Evaporator Packages

Copyright The Institute of Electrical and Electronics Engineers, Inc.
Provided by IHS under license with IEEE
No reproduction or networking permitted without license from IHS

Not for Resale

5.30 Control Rod Drive Cooling System (PWR)—CD

5.30.1 System Function. The control rod drive cooling system (PWR) provides cooling to the control rod drive mechanism stators in the control rod drive cooling system (PWR).

5.30.2 System Description. The control rod drive cooling system (PWR) may provide cooling with either water or air as the cooling medium. If air is used as the cooling medium, the system typically includes fans, ductwork, and cooling coils.

A typical water system consists of a single closed cooling loop with redundant full-capacity pumps and heat exchangers. Normally one pump and one heat exchanger are in service with the other pump in standby. Heat exchanger cooling water is provided by the essential service water system. A surge tank is provided to accommodate system volume changes and provide sufficient net positive suction head (NPSH) to the pumps. Strainers are provided to minimize the collection of iron corrosion products in the magnetic field of the control rod drive mechanisms.

5.30.3 Mode of Operation. The control rod drive cooling system (PWR) is in operation whenever the control rod drive mechanism stators are energized or as necessary to maintain required stator temperature.

5.30.4 Major Interfacing Systems

Essential Service Water System	BI
Control Rod Drive System (PWR)	AA

5.30.5 Major Equipment

Control Rod Drive Mechanism Cooling Water Pumps

Control Rod Drive Mechanism Cooling Water Heat Exchangers

Surge Tank

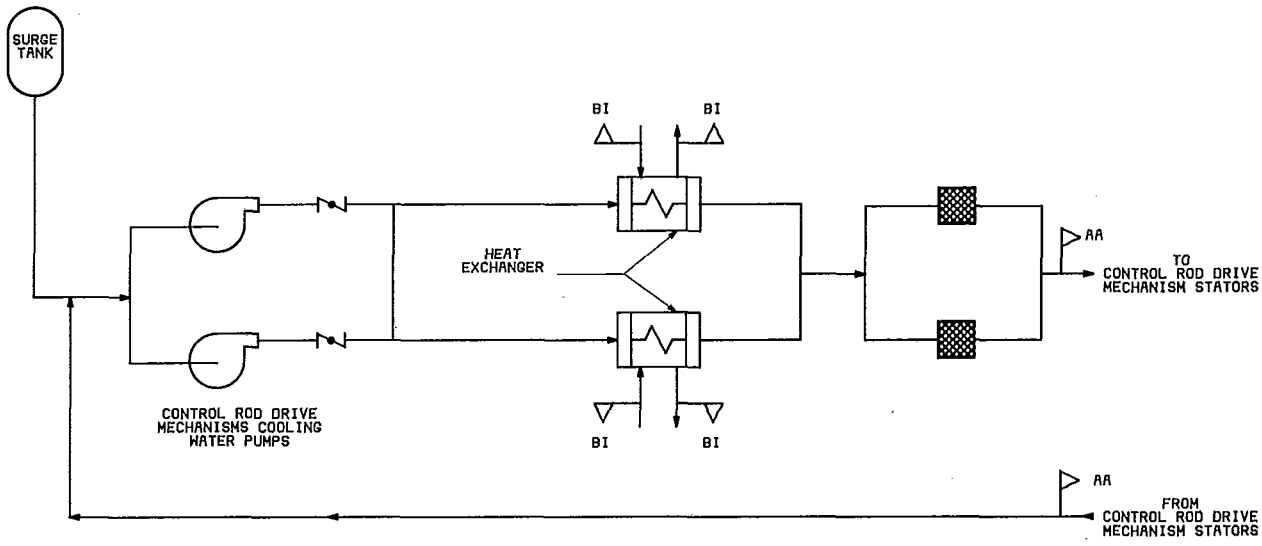

AA — Control Rod Drive System (PWR)
BI — Essential Service Water System

Fig 27
Control Rod Drive Cooling System (PWR) — (CD)

Copyright The Institute of Electrical and Electronics Engineers, Inc.
Provided by IHS under license with IEEE
No reproduction or networking permitted without license from IHS
Not for Resale

5.31 Reactor Water Cleanup System (BWR)—CE

5.31.1 System Function. The reactor water cleanup system (BWR) maintains reactor vessel water quality.

5.31.2 System Description. The reactor water cleanup system (BWR) maintains a high degree of water purity within the reactor vessel by removing fission and corrosion products, along with any other soluble or insoluble impurities that may be present within the reactor water inventory. In addition, the system may be used to remove excess water from the primary system during periods of increasing water volume within the reactor vessel.

For normal system operation (typical system), water is removed from the reactor vessel through piping connections with the reactor recirculation pump suction lines and pumped through regenerative and nonregenerative heat exchangers where it is cooled, and then through the filter-demineralizer units. The flow continues on through the shell side of the regenerative heat exchangers where it is heated before returning to the reactor vessel with the inlet feedwater flow. During startup and other times of increasing water volume, excess water may be removed from the reactor by blowdown through the cleanup system to the main condenser or liquid waste management system.

5.31.3 Mode of Operation. The Reactor Water Cleanup System (BWR) operates during startup, shutdown, and normal operation.

5.31.4 Major Interfacing Systems

Feedwater System	SJ
Reactor Recirculation System (BWR)	AD
Liquid Waste Management System	WD
Condenser System	SG
Closed/Component Cooling Water System	CC
Solid Waste Management System	WB

5.31.5 Major Equipment

Reactor Water Cleanup Pumps
Regenerative Heat Exchangers
Nonregenerative Heat Exchangers
Cleanup Filter/Demineralizer Units

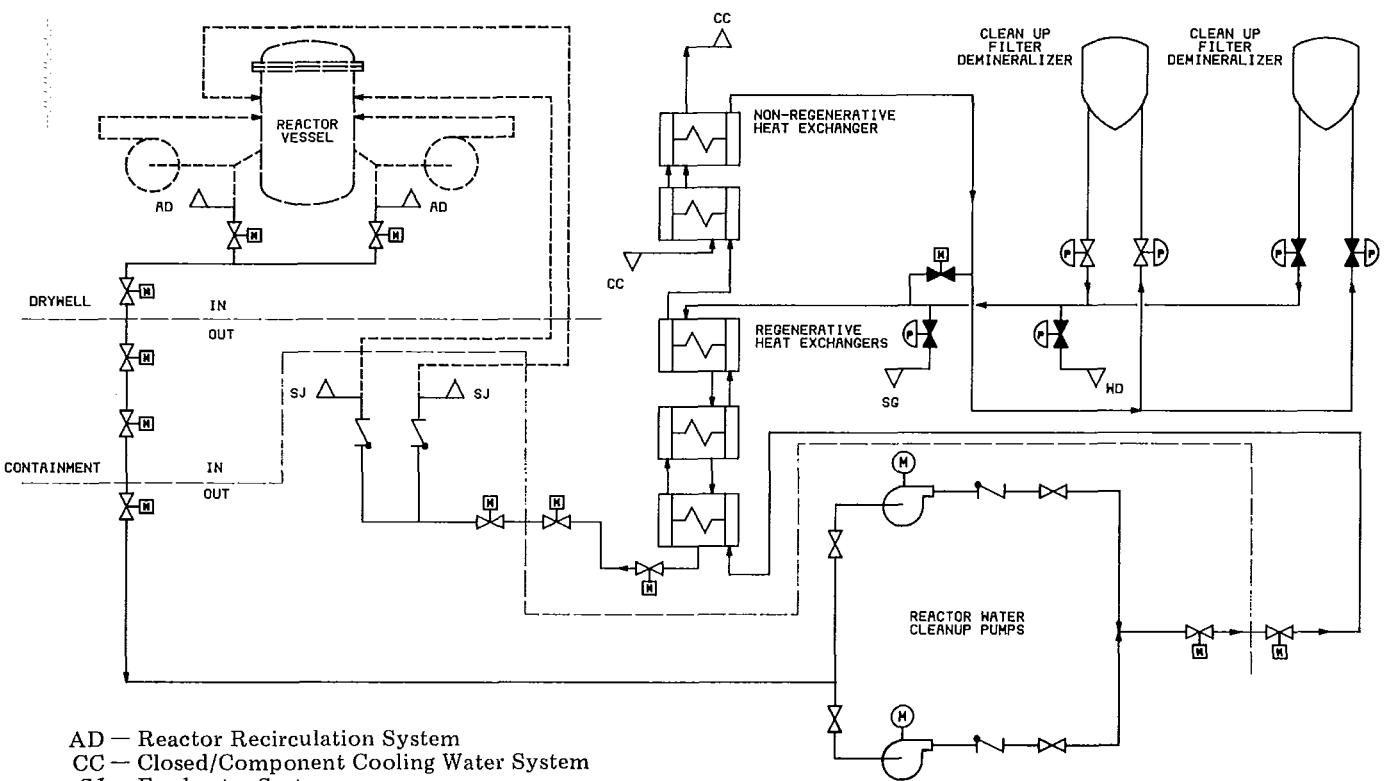

AD — Reactor Recirculation System
CC — Closed/Component Cooling Water System
SJ — Feedwater System
WD — Liquid Waste Management System
SG — Condenser System

Fig 28
Reactor Water Cleanup System (BWR) — CE

Copyright The Institute of Electrical and Electronics Engineers, Inc.
Provided by IHS under license with IEEE
No reproduction or networking permitted without license from IHS

Not for Resale

5.32 Reactor Services System—CF

5.32.1 System Function. The reactor services system provides equipment and tools for

(1) Refueling the reactor

(2) Servicing of the reactor, control rod, nuclear instrumentation, and other reactor ancillaries.

The reactor services system does not include equipment for transferring fuel between the reactor and fuel buildings which is part of the nuclear fuel transfer system. The system does not include general purpose building cranes or hoists, which are part of the material and equipment handling system. The system does not include equipment for storage, handling, and servicing of new and spent fuel which is a part of the nuclear fuel services system.

5.32.2 System Description. The reactor services system includes (but is not limited to) the following equipment for refueling operations in the reactor building.

Refueling Platform
Auxiliary Platform
Refuelng Machine

The reactor services system includes (but is not limited to) the following equipment and tools for servicing the reactor and reactor ancillaries.

Manipulator Grapple
Underwater General Servicing Tools
Underwater Lights
Underwater TV
Underwater Vacuum Cleaner
Control Rod Storage Racks
Stud Handling and Storage Equipment
Stud Tensioners
Reactor Vessel Head Storage Stand
Reactor Vessel Internals Storage Stand
Reactor Vessel Head Lifting Rig
Reactor Vessel Internals Lifting Rig
Control Rod Grapple
Control Rod Latching and Servicing Tools
Nuclear Instrumentation Handling and Storage Equipment
Control Rod Change Platform
Control Rod Elevator
Refueling Pool Seal
Load Cell

5.32.3 Mode of Operation. Reactor servicing equipment is used during refueling and maintenance outages.

5.32.4 Major Interfacing Systems

Nitrogen Supply System LK

5.32.5 Major Components. See System Description, 5.32.2.

5.33 Suppression Pool Purification System (BWR)—CG

5.33.1 System Function. The suppression pool purification system (BWR) maintains suppression pool water purity.

5.33.2 System Description. The suppression pool purification system (BWR) maintains suppression pool water purity by circulating it through filter and demineralizer units. This minimizes the buildup of radioactive corrosion products and dissolved fission products in the suppression pool, thus reducing radiation exposure to operating personnel.

5.33.3 Mode of Operation. The suppression pool purification system (BWR) operates during normal plant conditions on an as-needed basis.

5.33.4 Major Interfacing Systems

Solid Waste Management System WB
Reactor Containment Building NH

5.33.5 Major Equipment

Suppression Pool Cleanup Pump
Filter/Demineralizer Units

5.33.6 Fuel Management Systems Group

Table 6

	Fuel Management Systems Group D	Plant Type	Revision
DA	Fuel Pool Cooling and Purification System	B P	
DB	Nuclear Fuel Services System	B P	
DC	Diesel Fuel Oil System	B P	
DE	Fuel Oil Receiving, Storage and Transfer System	B P	
DF	Nuclear Fuel Transfer System	B P	

B—BWR P—PWR

Copyright The Institute of Electrical and Electronics Engineers, Inc.
Provided by IHS under license with IEEE
No reproduction or networking permitted without license from IHS

Not for Resale

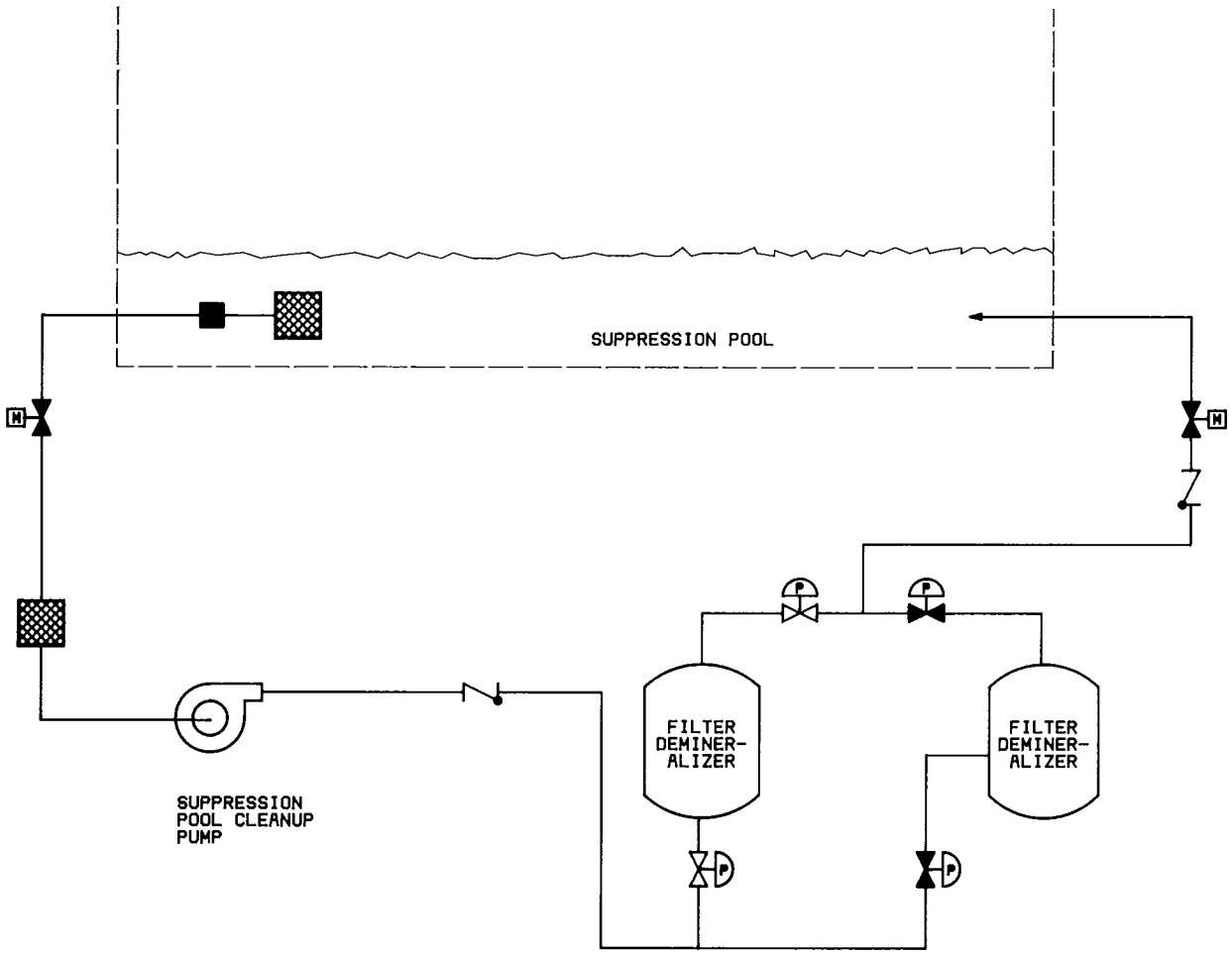

Fig 29
Suppression Pool Purification System (BWR) — CG

Copyright The Institute of Electrical and Electronics Engineers, Inc.
Provided by IHS under license with IEEE
No reproduction or networking permitted without license from IHS

Not for Resale

5.34 Fuel Pool Cooling and Purification System—DA

5.34.1 System Function. The fuel pool cooling and purification system removes heat resulting from the decay of nuclear fuel in the various fuel storage and transfer pools, and in the case of a BWR, the containment pool. The system also removes particulates, dissolved fission products, and surface dust, thereby maintaining water clarity and limiting radioactivity levels within the pools.

5.34.2 System Description. The basic system function is usually performed by one or more piping loops which consist of a circulating pump, heat exchanger, and possibly a filter/demineralizer. At a BWR plant the filter/demineralizer is usually part of the cooling loop, while at a PWR plant a separate *purification* loop is provided. The circulating pump is operated to draw water from the appropriate fuel storage, transfer, refueling, containment, and other pools as appropriate to the plant. The water is passed through a heat exchanger for cooling and returned to the pool areas. At a BWR plant the water is first passed through a filter demineralizer before returning to the pools. At a PWR plant the purification loop consists of a circulating pump and filter or demineralizer that operates in parallel to the cooling loop.

5.34.3 Mode of Operation. The system operates during normal, emergency, and cold shutdown conditions.

5.34.4 Major Interfacing Systems

Leak Monitoring System	IJ
Residual Heat Removal/Low Pressure Coolant Injection System (BWR)	BG
Chemical and Volume Control/Makeup and Purification System (PWR)	CB
Closed/Component Cooling Water System	CC
Essential Service Water System	BI
Condenser System	SG
Demineralized Water Storage and Transfer System	KC
Solid Waste Management System	WB
Liquid Waste Management System	WD

5.34.5 Major Components

Circulating Pumps
Heat Exchangers
Filters
Demineralizers

5.35 Nuclear Fuel Services System—DB

5.35.1 System Function. The nuclear fuel services system provides equipment and tools for storage, handling, and servicing of new and spent fuel.

The system does not include equipment for transferring fuel between the reactor and fuel buildings, which is part of the nuclear fuel transfer system. The system does not include general purpose building cranes or hoists, which are part of the Material and Equipment Handling System. The system does not include equipment for refueling the reactor or servicing of the reactor, control rods, nuclear instrumentation, or other reactor ancillaries which are part of the reactor services system.

5.35.2 System Description. The nuclear fuel services system includes (but is not limited to) the following equipment and tools for storage, handling, and servicing of new and spent fuel.

Spent Fuel Bridge
Fuel Handling Platform
Fuel Preparation Machine
New Fuel Inspection Stand
New Fuel Assembly Handling Fixture
Spent Fuel Handling Tool
Pneumatic Gripper
New Fuel Storage Racks
Spent Fuel Storage Racks

5.35.3 Mode of Operation. Nuclear fuel servicing equipment is primarily used during refueling and maintenance outages.

5.35.4 Major Interfacing Systems

Nitrogen Supply System	LK

5.35.5 Major Components. See System Description, 5.35.2.

Copyright The Institute of Electrical and Electronics Engineers, Inc.
Provided by IHS under license with IEEE
No reproduction or networking permitted without license from IHS

 Not for Resale

5.36 Diesel Fuel Oil System—DC

5.36.1 System Function. The diesel fuel oil system provides a daily supply and short term shortage of fuel oil for the prime mover (diesel engine or combustion turbine) of the emergency onsite power supply system.

5.36.2 System Description. A typical system basically consists of a seven day supply diesel oil storage tank and transfer pump(s). Diesel fuel oil is received into the seven day storage tank from the fuel oil receiving, storage and transfer system or an auxiliary tank truck fill connection. The transfer pump(s) then supplies the day tank of the prime mover of the emergency onsite power supply system as required.

5.36.3 Mode of Operation. The system is operating during emergency plant conditions and during test operations.

5.36.4 Major Interfacing Systems

Medium Voltage Power System—Class 1E	EB
Emergency Onsite Power Supply System	EK
Fuel Oil Receiving, Storage, and Transfer System	DE

5.36.5 Major Components

Transfer Pump(s)
Filters
Seven Day Storage Tank

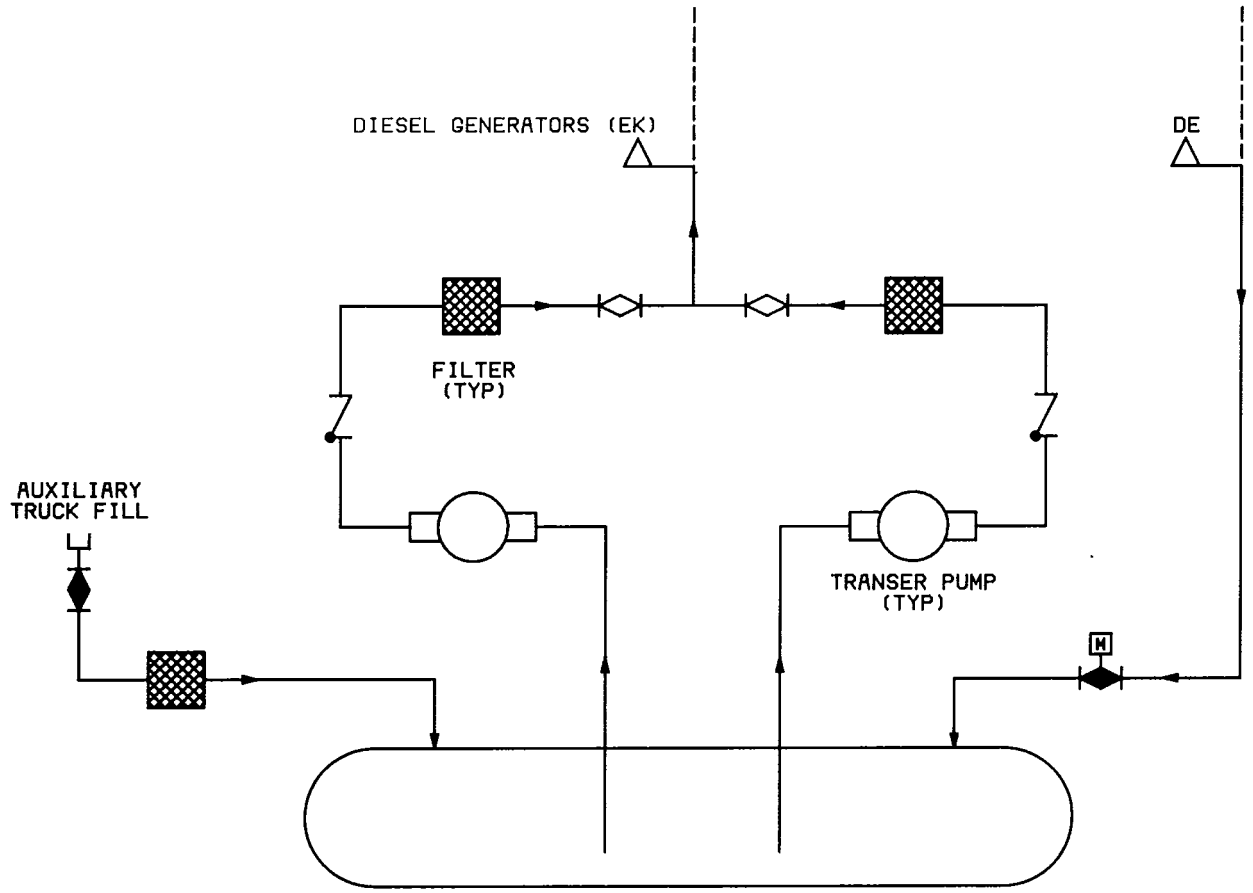

7-DAY DIESEL FUEL OIL STORAGE TANK

DE — Fuel Oil Receiving, Storage and Transfer System
EK — Emergency Onsite Power Supply System

Fig 30
Diesel Fuel Oil System — DC

Copyright The Institute of Electrical and Electronics Engineers, Inc.
Provided by IHS under license with IEEE
No reproduction or networking permitted without license from IHS

Not for Resale

5.37 Fuel Oil Receiving, Storage, and Transfer System—DE

5.37.1 System Function. The fuel oil receiving, storage and transfer system provides for long term storage of diesel fuel oil in bulk quantity.

5.37.2 System Description. A system usually consists primarily of a fuel oil yard storage tank(s), a fill/reject station, and a fuel oil transfer pump. The yard storage tank is usually located within a diked area of the plant so as to contain any spillage that may occur. The fuel oil is received from tank trucks or railcars, or both, at the fill/reject station and pumped by way of the transfer pump to the storage tank. On an as-needed basis the fuel oil is pumped by way of the transfer pump to the diesel fuel oil system and to any other services requiring fuel oil such as the diesel engine driven fire protection pumps.

5.37.3 Mode of Operation. The system operates on an as-needed basis during normal, shut-down, and emergency plant operating conditions.

5.37.4 Major Interfacing Systems

Diesel Fuel Oil System	DC
Fire Protection System (Water)	KP
Auxiliary Steam System	SA

5.37.5 Major Components

Yard Storage Tank(s)
Transfer Pump(s)
Fill/Reject Station

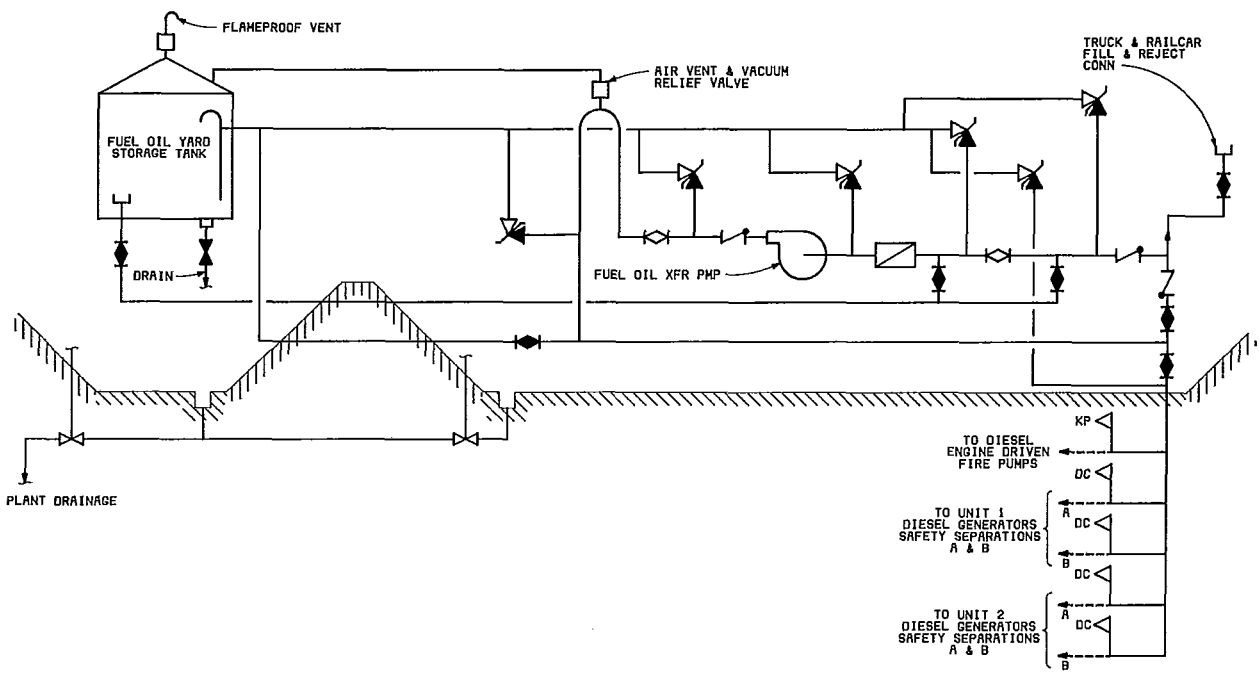

DC — Diesel Fuel Oil System
KP — Fire Protection System (Water)

Fig 31
Fuel Oil Receiving, Storage, and Transfer System — DE

Copyright The Institute of Electrical and Electronics Engineers, Inc.
Provided by IHS under license with IEEE
No reproduction or networking permitted without license from IHS

Not for Resale

5.38 Nuclear Fuel Transfer System—DF

5.38.1 System Function. The system provides for the transfer of the fuel between the reactor and storage area.

5.38.2 System Description. The nuclear fuel transfer system consists of all equipment necessary to transfer fuel elements between the reactor and the storage area. The system may contain overhead cranes, dump tubes, transfer tubes, conveyors, tilting assemblies, and mechanical transferring mechanisms and associated controls.

5.38.3 Mode of Operation. The system may be in use during normal operation or shutdown, depending on the type of reactor.

5.38.4 Major Interfacing Systems

5.38.5 Major Components

Mechanical Transferring Mechanisms

Table 7

	Electrical Power Systems Group	Plant Type		Revision
EA	Medium Voltage Power (AC) System (601 V to 35 kV)	B	P	
EB	Medium Voltage Power System—Class 1E	B	P	
EC	Low Voltage Power System (600-V and less)	B	P	
ED	Low Voltage Power System—Class 1E	B	P	
EE	Instrument & Uninterruptible Power System	B	P	
EF	Instrument & Uninterruptible Power System—Class 1E	B	P	
EI	DC Power System	B	P	
EJ	DC Power System—Class 1E	B	P	
EK	Emergency Onsite Power Supply System—Class 1E	B	P	
EL	Main Generator Output Power System	B	P	

B—BWR P—PWR

Copyright The Institute of Electrical and Electronics Engineers, Inc.
Provided by IHS under license with IEEE
No reproduction or networking permitted without license from IHS

Not for Resale

5.39 Medium-Voltage Power System (System Diagram) (601V to 35kV)—EA

5.39.1 System Function. The purpose of the medium-voltage power system is to supply power to the low voltage system and to medium voltage loads. This system is supplied from the main generator power system and offsite power systems.

5.39.2 System Description. The medium-voltage power system includes voltage levels from 601 V through 35 kV. The system includes supply transformers (unit auxiliary transformer and start-up transformers) interbus transformers, bus, cable and switchgear related to the distribution of this power. Sub-breakdowns of this system may be used to separate voltage levels. In the event that voltage levels are separated, the convention is used that the interbus transformer goes with the voltage level it supplies with the interface at the high-voltage terminal of the transformer. For loads other than transformer loads, the cable is identified with the load systems.

5.39.3 Mode of Operation. The system is operating in all modes of operation.

5.39.4 Major Interfacing Systems

Various Plant Systems	
Switchyard System	FK
Insulating-Oil System	LN
Main Generator System	TB
Reactor Recirculation System (BWR)	AD
Medium-Voltage Power System—Class 1E	EB
Low-Voltage Power System	EC
Reactor Coolant System	AB
Raw Water Makeup System	KI

5.39.5 Major Equipment

Medium-Voltage Buses
Medium-Voltage Switchgear
Protection Switches
Feeders
Control Logic Circuits
Main Generator Circuit Breakers or Load Break Switches
Instrumentation and Controls
Cables
Transformers

Copyright The Institute of Electrical and Electronics Engineers, Inc.
Provided by IHS under license with IEEE
No reproduction or networking permitted without license from IHS
Not for Resale

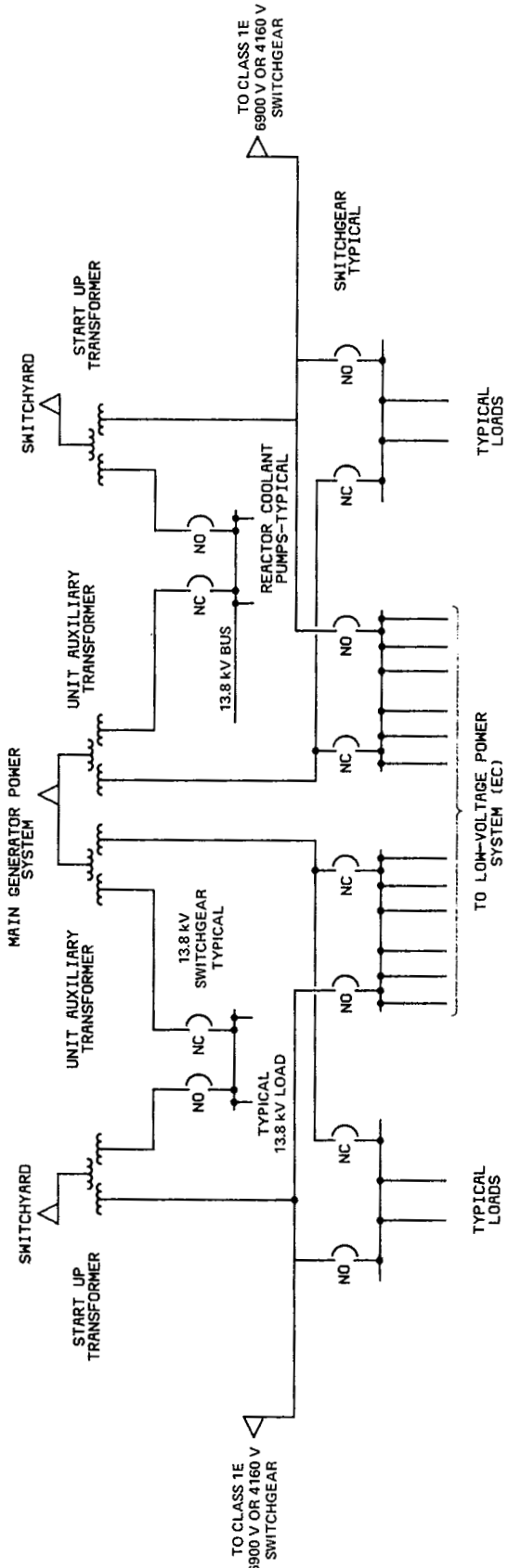

Fig 32
Medium-Voltage Power System — EA
System Diagram

Copyright The Institute of Electrical and Electronics Engineers, Inc.
Provided by IHS under license with IEEE
No reproduction or networking permitted without license from IHS

Not for Resale

5.40 Medium-Voltage Power System, Class 1E—EB

5.40.1 System Function. The purpose of the medium-voltage power system, Class 1E is to supply power to the Class 1E low-voltage system and to Class 1E medium-voltage loads. This system is supplied from the emergency power source (usually a diesel-generator unit) and off-site power systems.

5.40.2 System Description. The medium-voltage power system, Class 1E includes voltage levels from 601 V through 35 kV. The system includes bus, cable, and switchgear related to the distribution of this power. Sub-breakdowns of this system may be used to separate voltage levels. In the event that voltage levels are separated, the convention is used that the interbus transformer goes with the voltage level it supplies with the interface at the high-voltage terminal of the transformer. For loads other than transformer loads, the cable is identified with the load system.

5.40.3 Mode of Operation. The system is operating in all modes of operation.

5.40.4 Major Interfacing Systems

Main Generator System	TB
Auxiliary/Emergency Feedwater System (PWR)	BA
Containment Spray System (PWR)	BE
High-Pressure Core Spray System (BWR)	BG
Essential Service Water System	BI
Low-Pressure Core Spray System (BWR)	BM
Residual Heat Removal/Low Pressure Coolant Injection System (BWR)	BO
Residual Heat Removal/Low Pressure Safety Injection System (PWR)	BP
High-Pressure Safety Injection System (PWR)	BQ
Chemical and Volume Control/Makeup and Purification System (PWR)	CB
Diesel Fuel Oil System	DC
Medium-Voltage Power System	EA
Low-Voltage Power System—Class 1E	ED
Emergency Onsite Power System	EK
Switchyard System	FK

5.40.5 Major Equipment

Medium-Voltage Buses
Medium-Voltage Switchgear
Protection Switches
Feeders
Control Logic Circuits
Main Generator Circuit Breakers or Load Break Switches
Instrumentation and Controls
Cables
Transformers

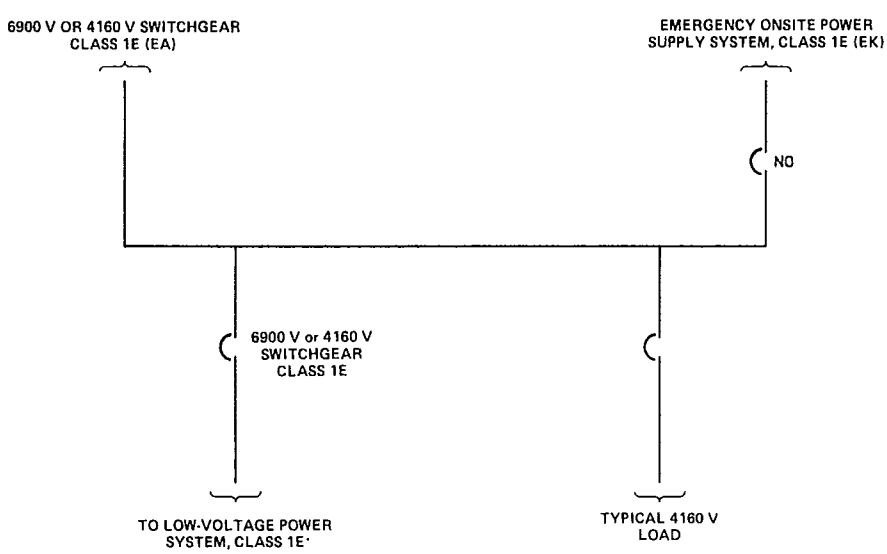

NOTES: (1) System includes two load groups. One load group shown.
(2) Typical system arrangement shown.

Fig 33
Medium-Voltage Power System, Class 1E — EB

Copyright The Institute of Electrical and Electronics Engineers, Inc.
Provided by IHS under license with IEEE
No reproduction or networking permitted without license from IHS
Not for Resale

5.41 Low-Voltage Power System (600 V and less)—EC

5.41.1 System Function. The purpose of the low-voltage power system is to distribute power to electrical loads 600 V and below.

5.41.2 System Description. The low-voltage system includes supply transformers, unit substations, low-voltage switchgear and power centers, motor control centers, cable, bus, distribution transformers, and panel boards. Sub-breakdowns of this system may be used to separate voltage levels. In the event that voltage levels are separated, the convention is used that the transformer goes with the voltage level it supplies, with the interface at the high voltage terminal of the transformer. For loads other than transformer loads, the cable goes with the load system.

5.41.3 Mode of Operation. The system is in operation in all modes of operation.

5.41.4 Major Interfacing Systems

Medium-Voltage Power System	EA
Instrument and Uninterruptible Power System	EE
DC Power System	EI
Heat Tracing System	FD
Normal AC Lighting System	FF
Standby AC Lighting System	FG
Communications System	FI
Station Generation Telemetering System	FJ
Switchyard System	FK
Annunciator System	IB
Computer System	ID
Incore/Excore Monitoring System	IG
Leak Monitoring System	IJ
Temperature Monitoring System	IM
Television System	IR
Environmental/Meteorological Monitoring System (Ex PLT)	IS
Integrated Control System	JA
Turbine Steam Bypass Control System	JI
Condensate and Feedwater Chemistry Control System	KD
Fire Protection System (Water)	KP
Fire Protection System (Chemical)	KQ
Diesel Generator Starting Air System	LC
Instrument Air Supply System	LD
Lube Oil Storage and Transfer System	LM
Carbon Dioxide (CO_2) Supply System	LW
Pumping Station Environmental Control System	UA
Water Treatment Building Environmental Control System	UB
Service Building Environmental Control System	UC
Administration Building Environmental Control System	UD
Security Building Environmental Control System	UE
Technical Support Center Environmental Control System	UF
Emergency Operations Facility Environmental Control System	UG
Visitors Center Environmental Control Center	UH
Reactor Building Environmental Control System	VA
Access Corridors Environmental Control System	VE
Auxiliary Building Environmental Control System	VF
Fuel Building Environmental Control System	VG
Radwaste Building Environmental Control System	VH
Control Building/Control Complex Environmental Control System	VI
Emergency Onsite Power Supply Building Environmental Control System	VJ
Turbine Building Environmental Control System	VK

Copyright The Institute of Electrical and Electronics Engineers, Inc.
Provided by IHS under license with IEEE
No reproduction or networking permitted without license from IHS

Not for Resale

5.41.5 Major Equipment
Low-Voltage Buses
Switchgear
Transformers
Feeders
Instrumentation and Controls

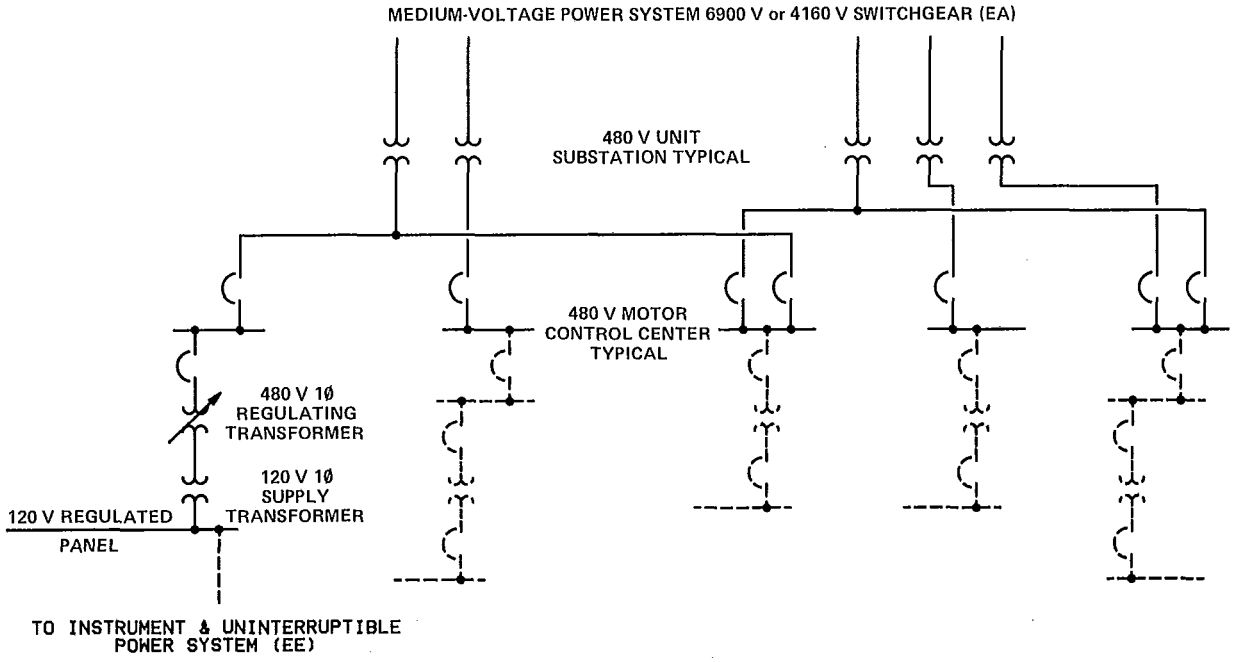

Fig 34
Low-Voltage Power System — EC
Typical 480 V Loads (in Fluid System)

5.42 Low Voltage Power System, Class 1E—ED

5.42.1 System Function. The purpose of the low-voltage power system, Class 1E is to distribute power to Class 1E electrical loads 600 V and below.

5.42.2 System Description. The Class 1E low-voltage system includes supply transformers, unit substations, low-voltage switchgear and power centers, motor control centers, cable, bus, distribution transformers, and panel boards. Sub-breakdowns of this system may be used to separate voltage levels. In the event that voltage levels are separated, the convention is used that the transformer goes with the voltage level it supplies, with the interface at the high-voltage terminal of the transformer. For loads other than transformer loads, the cable goes with the load system.

5.42.3 Mode of Operation. The system is in operation in all modes of operation.

5.42.4 Major Interfacing Systems

Seismic Monitoring System	IN
Main Generator System	TB
Control Rod Drive System (PWR)	AA
Reactor Core Isolation Cooling System (BWR)	BN
DC Power System—Class 1E	EJ
Medium Voltage Power System—Class 1E	EB
Instrument and Uninterruptible Power System—Class 1E	EF
Low-Voltage Power System—Class 1E	ED
Heat Tracing System—Class 1E	FE
Seismic Monitoring System	IN
Engineered Safety Features Actuation System	JE
Diesel Lube Oil System	LA

Copyright The Institute of Electrical and Electronics Engineers, Inc.
Provided by IHS under license with IEEE
No reproduction or networking permitted without license from IHS

Not for Resale

Pumping Station Environmental Control System	UA
Reactor Environmental Control System	VA
Drywell Environmental Control System (BWR)	VB
Shield Annulus Return and Exhaust System	VC
Auxiliary Building Environmental Control System	VF
Fuel Building Environmental Control System	VG
Control Building/Control Complex Environmental Control System	VI
Emergency Onsite Power Supply Building Environmental Control System	VJ

5.42.5 Major Equipment

Low-Voltage Buses
Switchgear
Transformers
Feeders
Instrumentation and Controls

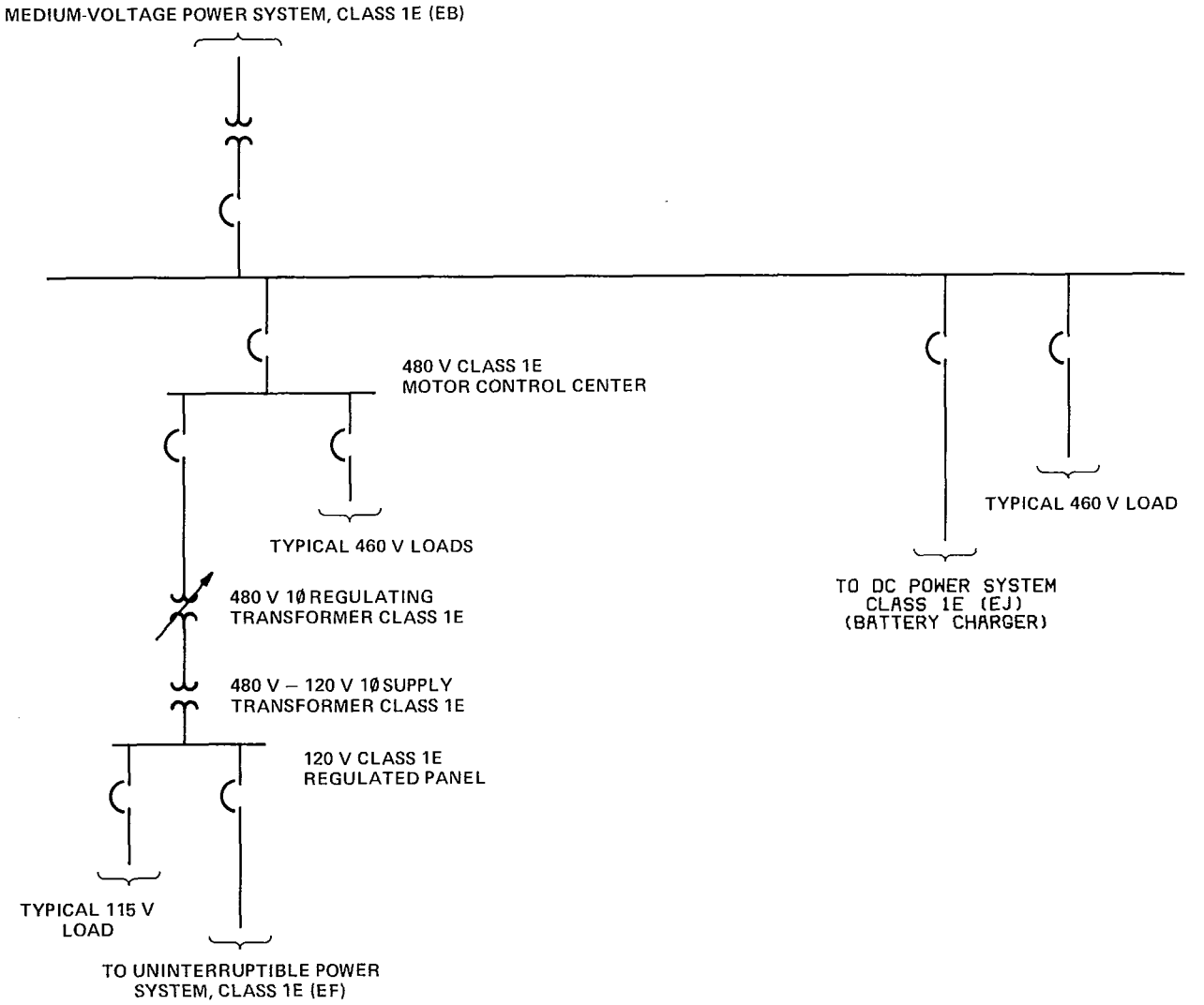

Fig 35
Low-Voltage Power System, Class 1E — ED

Copyright The Institute of Electrical and Electronics Engineers, Inc.
Provided by IHS under license with IEEE
No reproduction or networking permitted without license from IHS
Not for Resale

5.43 Instrument and Uninterruptible Power System—EE

5.43.1 System Function. The purpose of the instrument and uninterruptible power system is to supply low noise, uninterruptible regulated power to loads such as the computer and to important instrumentation and controls.

5.43.2 System Description. The instrument and uninterruptible power system may consist of a static inverter, static transfer switches, stepdown transformers, voltage regulating transformers, maintenance bypass switches, regulated rectifier, distribution panels, and interconnecting cabling.

Notes: (1) The instrument power distribution system is not identified by a separate system based on the conclusion that this is usually provided by components which are shared with the uninterruptible system.

(2) The instrument power system may consist of a regulated bus which in the IEEE description is shown within the boundaries of the uninterruptible power system.

5.43.3 Mode of Operation. The system is operating in all modes of operation.

5.43.4 Major Interfacing Systems

Temperature Monitoring System	IM
Performance Monitoring System	IO
DC Power System	EI
Low Voltage Power System	EC
Computer System	ID

5.43.5 Major Equipment

Transformers
Inverters
Switchgear
Instrumentation and Controls
Cables

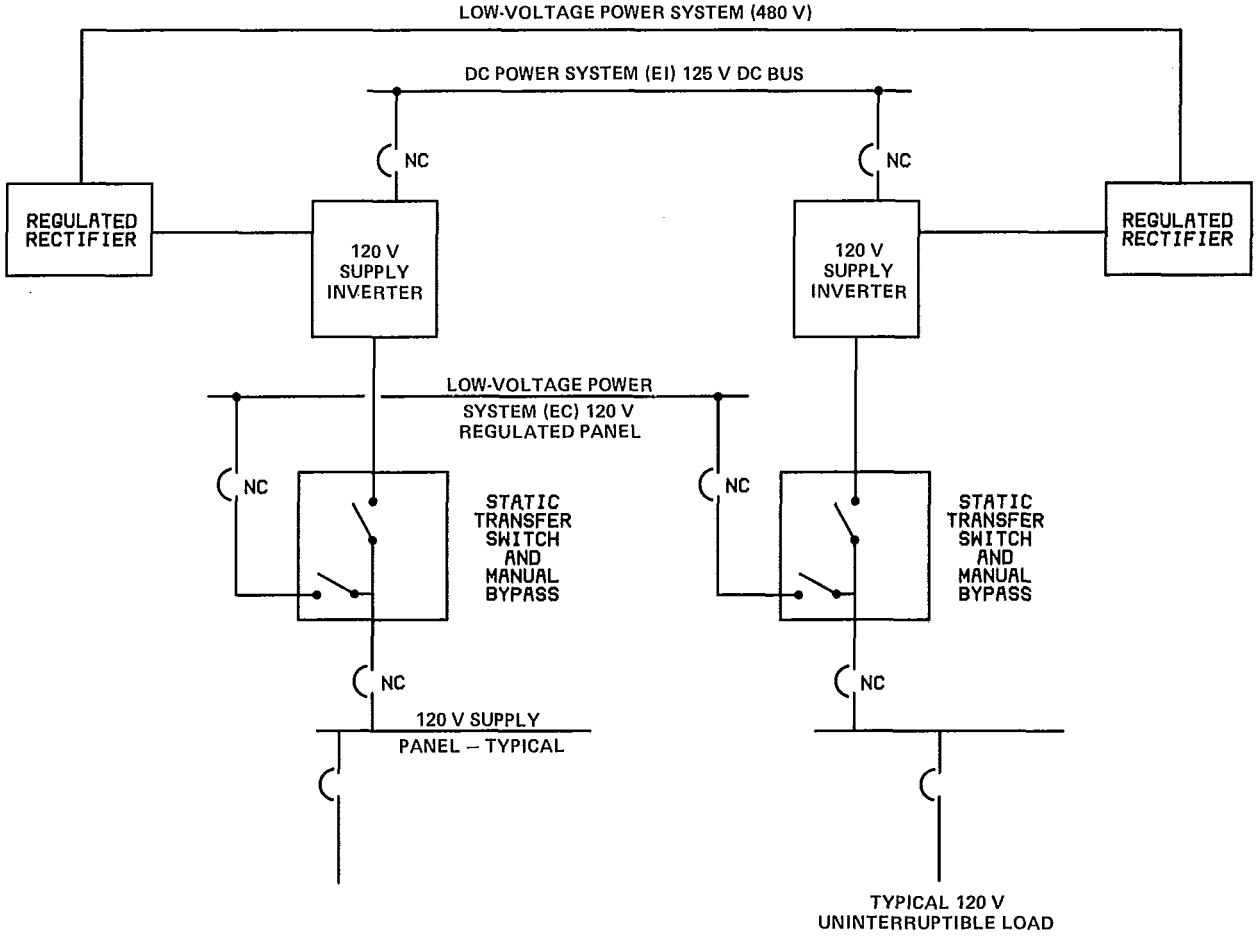

Fig 36
Instrument and Uninterruptible Power System — EE

Copyright The Institute of Electrical and Electronics Engineers, Inc.
Provided by IHS under license with IEEE
No reproduction or networking permitted without license from IHS

5.44 Instrument and Uninterruptible Power System, Class 1E—EF

5.44.1 System Function. The purpose of the uninterruptible power system, Class 1E, is to supply low noise, uninterruptible regulated power to Class 1E loads such as the plant protection system and to critical instrumentation and controls.

5.44.2 System Description. The Class 1E instrument and uninterruptible power distribution may consist of a static inverter, static transfer switches, stepdown transformers, voltage regulating transformers, maintenance bypass switches, regulated rectifier, distribution panels, and interconnecting cabling. This system is sometimes called a vital power system.

NOTES: (1) The instrument power distribution system is not identified by a separate system based on the conclusion that this is usually provided by components which are shared with the uninterruptible system.

(2) The instrument power system may consist of a regulated bus which in the IEEE descriptions is shown within the boundaries of the uninterruptible power system.

5.44.3 Mode of Operation. The system is operating in all modes of operation.

5.44.4 Major Interfacing Systems

Low-Voltage Power System—Class 1E	ED
DC Power System—Class 1E	EJ
Computer System	ID
Performance Monitoring System	IO

5.44.5 Major Equipment

Transformers
Inverters
Switchgear
Instrumentation and Controls
Cables

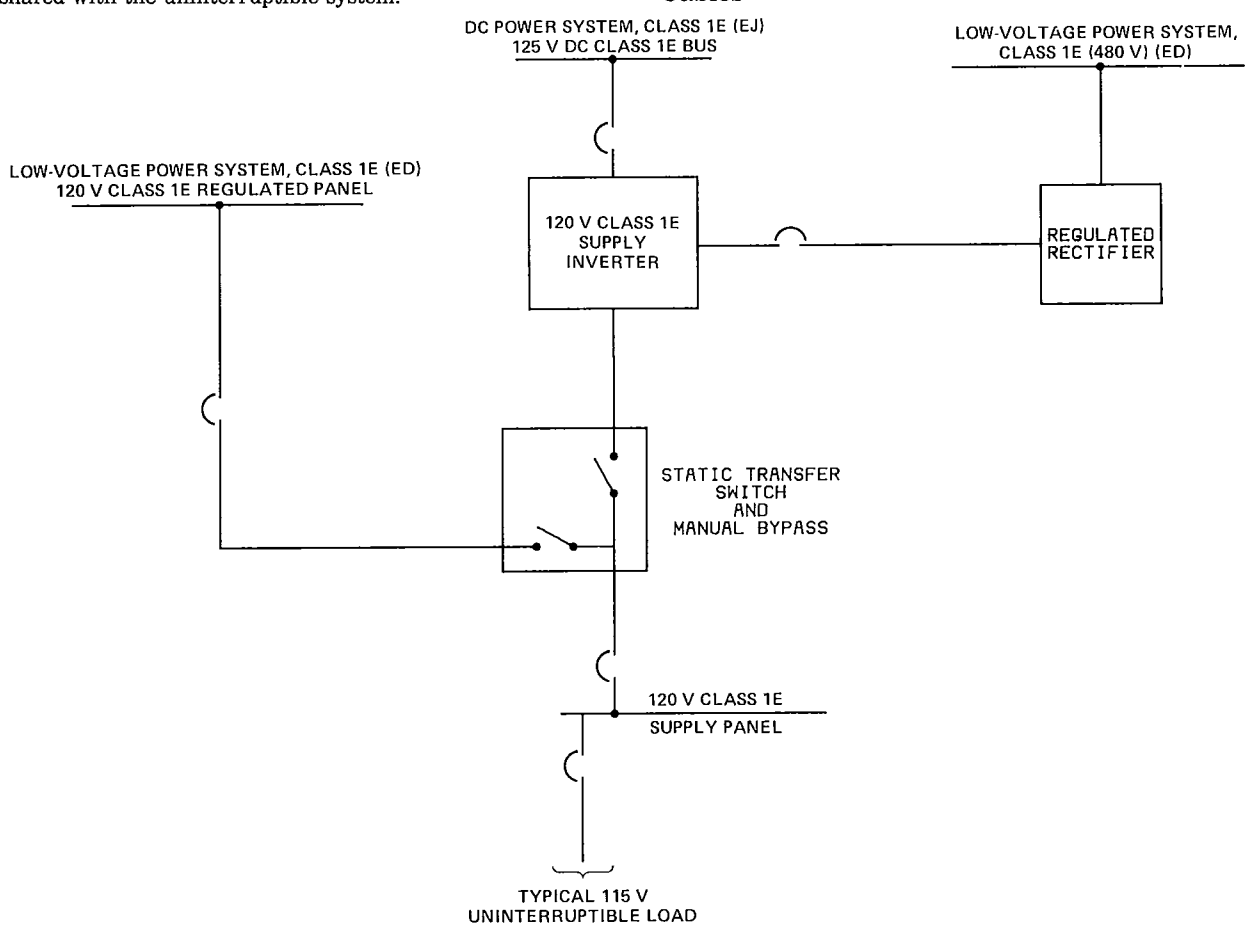

NOTES: One channel shown. Four channels per plant.

Fig 37
Instrument and Uninterruptible
Power System, Class 1E — EF

Copyright The Institute of Electrical and Electronics Engineers, Inc.
Provided by IHS under license with IEEE
No reproduction or networking permitted without license from IHS

 Not for Resale

5.45 DC Power System—EI

5.45.1 System Function. The purpose of the dc power system is to provide a stored energy source for dc loads.

5.45.2 System Description. The dc power system typically consists of one or more batteries, chargers, switchboards, and/or distribution panels. Sub-breakdowns of this system may be used to separate voltage levels, and/or power versus control. In the event that sub-breakdowns are used, the same conventions and coding structures as described under the low-voltage power system are used.

5.45.3 Mode of Operation. This system is operating in all modes of plant operation.

5.45.4 Major Interfacing Systems. Various plant electrical instrumentation and control systems:

Instrument and Uninterruptible Power System	EE
Low-Voltage Power System	EC
Switchyard System	FK

5.45.5 Major Equipment

Batteries
Battery Chargers
Distribution Panels
Breakers
Cables
Buses

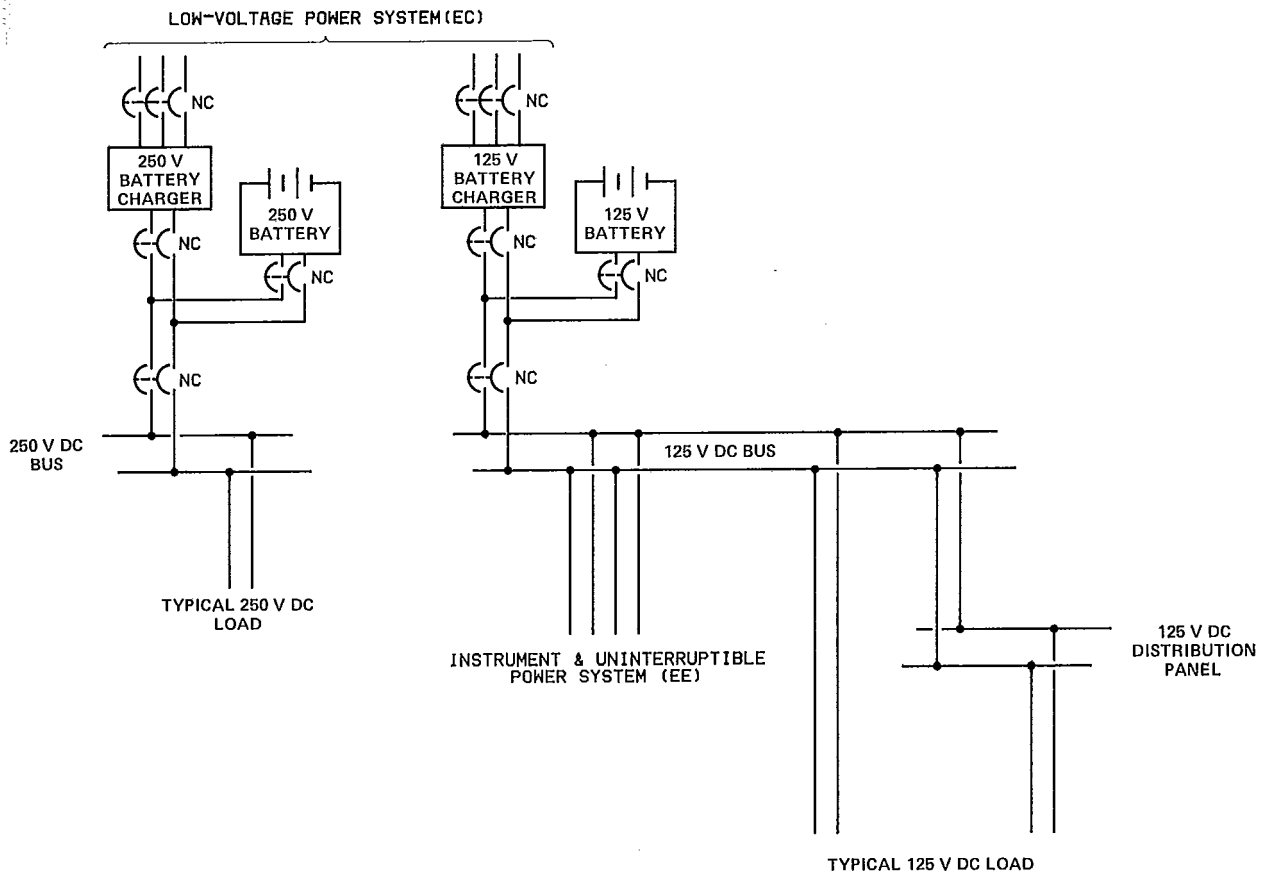

Fig 38
DC Power Systems — EI

Copyright The Institute of Electrical and Electronics Engineers, Inc.
Provided by IHS under license with IEEE
No reproduction or networking permitted without license from IHS
Not for Resale

5.46 DC Power System, Class 1E—EJ

5.46.1 System Function. The purpose of the dc power system, Class 1E is to provide a stored energy source for Class 1E dc loads.

5.46.2 System Description. The dc power system, Class 1E typically consists of one or more batteries, chargers, switchboards, and/or distribution panels. Sub-breakdowns of this system may be used to separate voltage levels or power versus control, or both. In the event that sub-breakdowns are used, the same conventions and coding structures as described under the low-voltage power system are used. This system is sometimes called a vital power system.

5.46.3 Mode of Operation. This system is operating in all modes of plant operation.

5.46.4 Major Interfacing Systems. Various plant electrical instrumentation and control systems:

Emergency DC Lighting System	FH
Low-Voltage Power Supply System—Class 1E	ED
Instrument and Uninterruptible Power System—Class 1E	EF
Emergency Onsite Power Supply System	EJ

5.46.5 Major Equipment

Batteries
Battery Chargers
Distribution Panels
Breakers
Cables
Buses

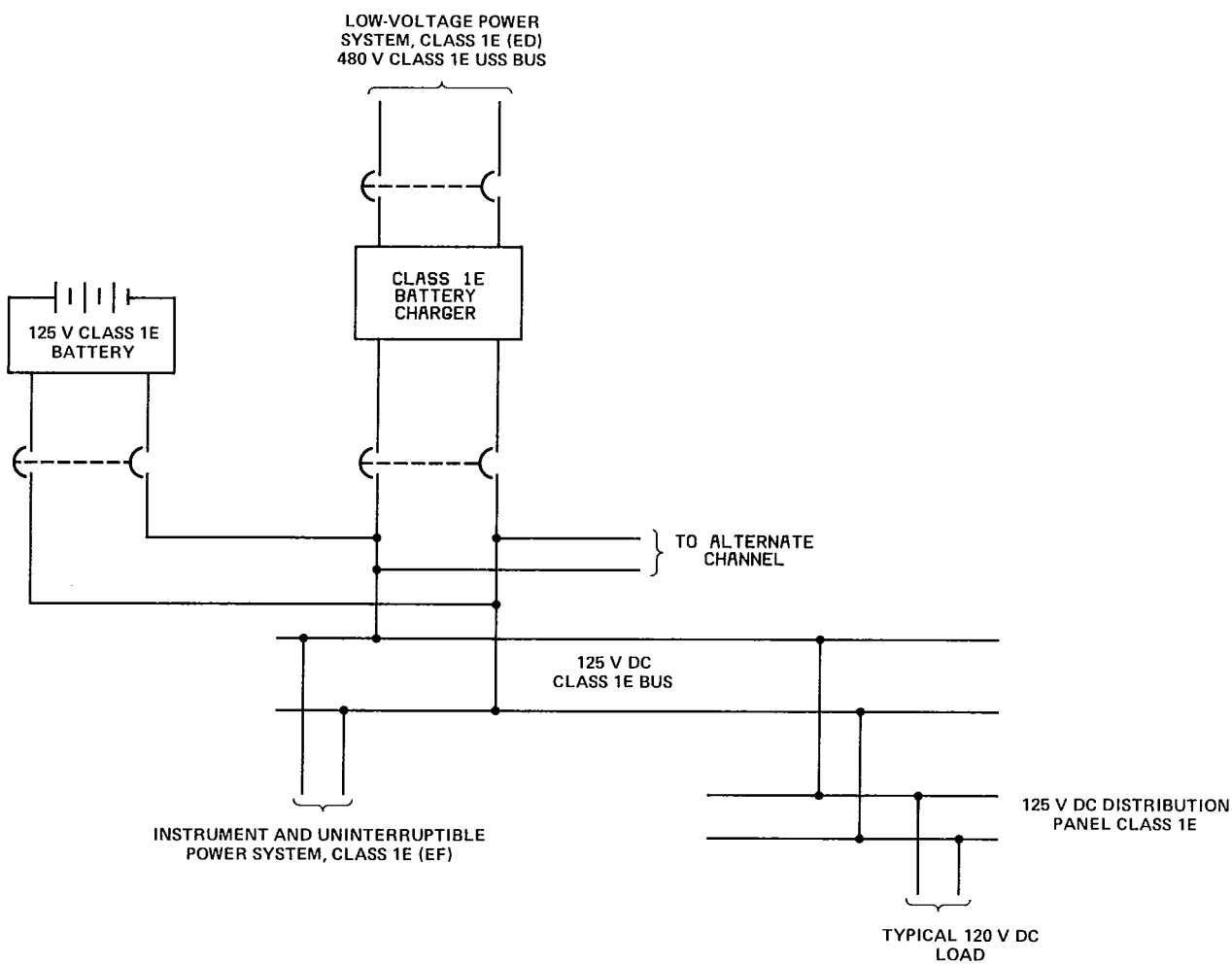

Fig 39
DC Power Systems, Class 1E — EJ

Copyright The Institute of Electrical and Electronics Engineers, Inc.
Provided by IHS under license with IEEE
No reproduction or networking permitted without license from IHS

Not for Resale

5.47 Emergency Onsite Power Supply System—EK

5.47.1 System Function. The purpose of the emergency onsite power supply system is to provide generating capacity to service loads essential for safe shutdown of the plant in the event of the loss of offsite power.

5.47.2 System Description. This emergency onsite power supply system includes a generator prime mover (diesel engine or combustion turbine), generator, and associated auxiliaries such as air filters, day tank, starting equipment, and muffler or noise suppressors. It does not include such items as long-term fuel supply or external cooling services which are provided by related mechanical systems.

5.47.3 Mode of Operation. The system is operating during emergency plant conditions.

5.47.4 Major Interfacing Systems

Low-Voltage Power System—Class 1E	ED
DC Power System—Class 1E	EJ
Essential Service Water System	BI
Diesel Fuel Oil System	DC
Communications System	FI
Standby AC Lighting System	FG
Diesel Starting Air System	LC
Medium Voltage Power System—Class 1E	EB
Diesel Lube Oil System	LA

5.47.5 Major Equipment

Diesel Engine/Combustion Turbine
Generator
Exciter
Instrumentation and Controls

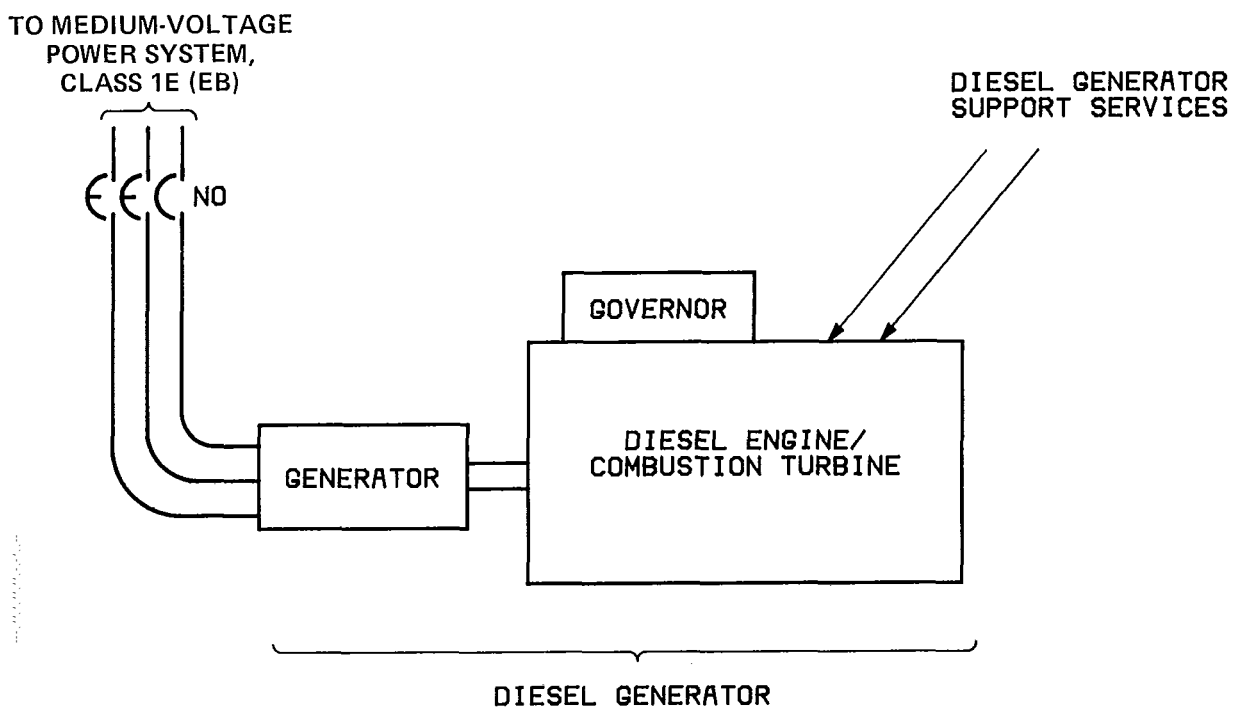

Fig 40
Emergency Onsite Power Supply System — EK

Copyright The Institute of Electrical and Electronics Engineers, Inc.
Provided by IHS under license with IEEE
No reproduction or networking permitted without license from IHS
Not for Resale

5.48 Main Generator Output Power System —EL

5.48.1 System Function. This system provides for conversion of mechanical energy from a prime mover to electrical energy and transformation of the generator output voltage to switchyard voltage level for connection to the transmission system.

5.48.2 System Description. The system includes the main generator isolated phase bus, main transformers, load break switch or main generator circuit breaker if used. The boundaries of this system are at the main transformer high voltage bushings, the unit auxiliary transformer high voltage bushings, and the generator output. The system includes generator and main transformer grounding, PT and surge protection cubicles, generator leads, etc. The generator and transformer relay and metering is also usually associated with the system.

5.48.3 Mode of Operation. The system is operating in normal plant operation.

5.48.4 Major Interfacing Systems

Main Turbine System	TA
Plant Protection Systems	JC
Switchyard System	FK
Main Generator System	TB

5.48.5 Major Equipment

Generator Buses
Transformers
Breakers
Switches

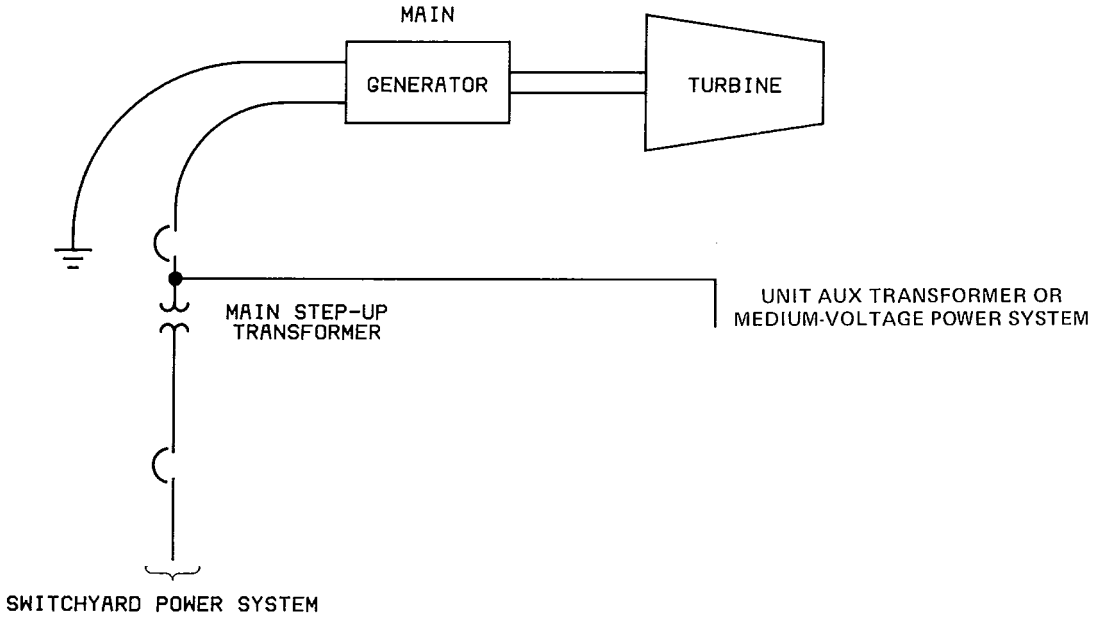

Fig 41
Main Generator Output Power System — EL

Table 8

	Electrical Support Systems Group	Plant Type	Revision
FA	Cable Raceway System	B P	
FB	Cathodic Protection System	B P	
FC	Grounding and Lightning Protection System	B P	
FD	Heat Tracing System	B P	
FE	Heat Tracing System—Class 1E	B P	
FF	Normal AC Lighting System	B P	
FG	Standby AC Lighting System	B P	
FH	Emergency DC Lighting System	B P	
FI	Communications System	B P	
FJ	Station Generation Telemetering System	B P	
FK	Switchyard System	B P	

B—BWR P—PWR

Copyright The Institute of Electrical and Electronics Engineers, Inc.
Provided by IHS under license with IEEE
No reproduction or networking permitted without license from IHS

Not for Resale

5.49 Cable Raceway System—FA

5.49.1 System Function. The cable tray system provides support for carrying interconnecting cables throughout the plant.

5.49.2 System Description. The system includes various types of raceways for power and control cables. The system includes tray and conduit supports (regular and seismic) which may be designed in conjunction with HVAC duct supports.

5.49.3 Mode of Operation. This is a support system, not an operating system.

5.49.4 Major Interfacing Systems. Cable for all plant systems.

5.49.5 Major Equipment

Various Types of Cable Trays
Various Types of Conduits
Tray and Conduit Supports
Miscellaneous Tray and Conduit Fittings

5.50 Cathodic Protection System—FB

5.50.1 System Function. The purpose of the cathodic protection system is to mitigate galvanic or stray corrosion activity on underground immersed or water-filled metallic structures. The systems oppose the discharge of corrosion current from anodic areas, thus mitigating corrosion.

5.50.2 System Description. The system consists of anodes, rectifiers, and reference cells.

5.50.3 Mode of Operation. The system is operating in all modes of plant operation.

5.50.4 Major Interfacing Systems. Various plant systems

5.50.5 Major Equipment

Instrumentation and Controls
Rectifiers
Reference Cells
Anodes
Cables

5.51 Grounding and Lightning Protection System—FC

5.51.1 System Function. The grounding and lightning protection system provides for personnel safety by minimizing "step and touch" potential and provides equipment protection by providing a fault return path. This system also provides a path to ground for protection from lightning strokes.

5.51.2 System Description. The system includes a network grounding system within the plant connected with a buried grid and includes lightning protection for that portion of the system which is not a part of a procurred package such as a cooling tower or chimney.

5.51.3 Mode of Operation. The system is operating in all modes of plant operation.

5.51.4 Major Interfacing Systems. Various plant systems and structures

5.51.5 Major Equipment

Ground Wires
Ground Rods

5.52 Heat Tracing System—FD

5.52.1 System Function. The purpose of the heat tracing system is to prevent the temperature of fluids from dropping below the freezing or crystalization point of the fluid. Freeze protection is usually associated with outdoor piping, pumps, valves, tanks, instrumentation, such as water lines (see IEEE Std 622-1979).

5.52.2 System Description. The heat tracing system is a system of components and devices consisting of electric heaters, controllers, sensors, dedicated power system components such as transformers, panelboards, cables, and system alarm devices (as required), which when taken together as a system is used to increase or maintain the temperature of fluids in mechanical pipes, valves, pumps, tanks, instrumentation, etc. The electric process system is utilized to keep a fluid at a unique temperature to aid flow of the fluid and to prevent materials from coming out of suspension.

5.52.3 Mode of Operation. The system is operating in all modes of plant operation.

5.52.4 Major Interfacing Systems

Low-Voltage Power System EC
Plant Systems Requiring Pipe Heating

5.52.5 Major Equipment

Resistance Wire
Control Panels
Temperature Sensors
Cables
Transformers

5.53 Heat Tracing System, Class 1E—FE

5.53.1 System Function. The purpose of the heat tracing system, Class 1E is to prevent the temperature of fluids in Class IE systems from dropping below the freezing or crystalization point of the fluid. Freeze protection is usually associated with outdoor piping, valves, tanks, instrumentation, such as water lines (see IEEE Std 622-1979).

Copyright The Institute of Electrical and Electronics Engineers, Inc.
Provided by IHS under license with IEEE
No reproduction or networking permitted without license from IHS
Not for Resale

5.53.2 System Description. The heat tracing system, Class 1E is a system of components and devices consisting of electric heaters, controllers, sensors, dedicated power system components such as transformers, panelboards, cables, and system alarm devices (as required), which when taken together as a system is used to increase or maintain the temperature of fluids in mechanical pipes, valves, pumps, tanks, instrumentation, etc. The electric process system is utilized to keep at a unique temperature so as to aid the flow of the fluid and to prevent materials from coming out of suspension.

5.53.3 Mode of Operation. The system is operating in all modes of plant operation.

5.53.4 Major Interfacing Systems

Low-Voltage Power System, Class 1E	ED
Plant Systems Requiring Pipe Heating	

5.53.5 Major Equipment

Resistance Wire
Control Panels
Temperature Sensors
Cables
Transformers

5.54 Normal AC Lighting System—FF

5.54.1 System Function. The purpose of the normal ac lighting system is to provide general illumination throughout the plant site and buildings.

5.54.2 System Description. This system includes high and low bay lighting, and industrial and commercial lighting of various types such as incandescent, fluorescent, and high intensity discharge. This system utilizes lighting at various voltage levels from 480 V ac down to 120 V ac. This system may be subdivided into categories such as interior, exterior, plant facility, area and roadway lighting, and it may be subdivided by voltage levels. The normal ac lighting system also provides power to the aircraft obstruction lighting. Security lighting is powered from the normal ac lighting system and may have non-Class 1E dc power as a backup source.

5.54.3 Mode of Operation. The system is operating in all modes of operation.

5.54.4 Major Interfacing Systems

Low-Voltage Power System	EC
Emergency DC Lighting System	FH
Various Plant Systems	

5.54.5 Major Equipment

Lighting Fixtures
Lighting Switches
Transformers
Conduit
Cable
Lighting Cabinets
Miscellaneous Hardware

5.55 Standby AC Lighting System—FG

5.55.1 System Function. The purpose of the standby ac lighting system is to provide lighting to selected areas of the plant for operation during emergency conditions to support continuity of essential operations. A reduced level of lighting is used for interior access and egress while lighting in critical areas such as the control room is maintained at an acceptable level.

5.55.2 System Description. The lighting fixtures in the standby lighting system are powered by the emergency onsite power supply, in addition to (or in lieu of) the normal lighting bus.

5.55.3 Mode of Operation. The system is operating in emergency of plant modes.

5.55.4 Major Interfacing Systems

Low-Voltage Power System	EC
Emergency Onsite Power Supply System	EK
Emergency DC Lighting System	FH

5.55.5 Major Equipment

Lighting Cabinets
Lighting Fixtures
Switches
Battery Packs
Transformers
Conduit
Cable

5.56 Emergency DC Lighting System—FH

5.56.1 System Function. The purpose of the emergency dc lighting system is to provide light in critical areas of the plant. It is actuated by the loss of both normal and standby ac lighting power. Lighting is provided to selective areas of the plant at reduced levels. Such areas include the control room, access and egress areas, and areas necessary for continuity of essential plant operations and safe shutdown.

5.56.2 System Description. Control room emergency dc lighting is supplied by the station battery; access, egress, and area lighting is

Copyright The Institute of Electrical and Electronics Engineers, Inc.
Provided by IHS under license with IEEE
No reproduction or networking permitted without license from IHS

Not for Resale

supplied from self-contained battery units. Emergency lighting for essential equipment areas may also be powered by the station battery.

5.56.3 Mode of Operation. This system is in standby mode during normal plant operations and is activated by emergency situations.

5.56.4 Major Interfacing Systems

DC Power System, Class 1E	EJ
Normal AC Lighting System	FF
Standby AC Lighting System	FG
Communications System	FI

5.56.5 Major Equipment

Lighting Cabinets
Lighting Fixtures
Lighting Switches
Conduit
Cables
Battery Units

5.57 Communications System—FI

5.57.1 System Function. The communication system's purpose is to provide communication facilities within the plant and between the plant and external locations.

5.57.2 System Description. The communications system may be subdivided into various categories or types such as microwave, maintenance "sound-powered" system, intraplant communication, telephone and radio communications. The system includes the various components associated with these different types of systems.

5.57.3 Mode of Operation. This system is in operating mode in both normal and emergency situations.

5.57.4 Major Interfacing Systems

Low-Voltage Power System	EC
Emergency DC Lighting System	FH
Emergency Onsite Power Supply System	EK
Fire Detection System	IC
Record Storage System	LT

5.57.5 Typical Plant Communication Subsystems

Sound Powered Telephone (Backup) System
Intercom System
Audio System
Key Telephone System
Microwave Radio System
Television System
Power Line Carrier (PLC) System
Communications Test Equipment System
VHF Radio System
Automatic Telephone System
Manual Telephone System
Telephone Line Carrier System
Public Telephone System
Code Call Subsystem
Emergency Alarms Subsystem
Paging Subsystem
Operation Recording and Annunciation Subsystem
Supervisory Control and Data Acquisition Subsystem
Data Logging Subsystem

5.58 Station Generation Telemetering System—FJ

5.58.1 System Function. The station generation telemetering system is used to transmit either analog or digital signals from one plant location to another.

5.58.2 System Description. The signals originate from miscellaneous transducers throughout the plant. The data transmitted includes information such as unit generation and reserve station service megawatts.

5.58.3 Mode of Operation. This system is operating in normal plant operation.

5.58.4 Major Interfacing Systems

Main Turbine Instrumentation and Control System	IT
Switchyard System	FK
Low-Voltage Power System	EC

5.58.5 Major Equipment

Transmitters
Receivers
Converters
Transducers

5.59 Switchyard System—FK

5.59.1 System Function. The switchyard system is designed to receive power from the main transformer of the generator power output system and route it to outgoing transmission lines. The switchyard also serves as a source to receive power from the transmission lines when the station is shutdown.

5.59.2 System Description. This system includes equipment protection circuits and monitoring and control circuits. The boundaries of this system are the main transformer high volt-

Copyright The Institute of Electrical and Electronics Engineers, Inc.
Provided by IHS under license with IEEE
No reproduction or networking permitted without license from IHS

Not for Resale

age bushings, high-voltage terminals of station service transformers, and the terminals on the pull-off towers for the various transmission lines.

5.59.3 Mode of Operation. The system is operating in normal plant operation.

5.59.4 Major Interfacing Systems

Generator Power Output System	EL
Medium-Voltage Power System	EA
Low-Voltage Power System	EC
DC Power System	EI
Annunciator System	IB
Station Generation Telemetering System	FJ
Insulating Oil System	LN

5.59.5 Major Equipment

Inter-tie Transformers
Voltage Step-up Transformers
Equipment Protection Devices
Monitoring Devices
Lines, Towers, Insulators
Breakers
Motor-Operated Disconnects

Table 9

	Instrumentation and Monitoring Systems Group	Plant Type	Revision
IA	Security System	B P	
IB	Annunciator System	B P	
IC	Fire Detection System	B P	
ID	Data Computer System	B P	
IG	Incore/Excore Monitoring System	B P	
IH	Core Vibration Monitoring System	B P	
II	Loose Parts Monitoring System	B P	
IJ	Leak Monitoring System	B P	
IK	Containment Environmental Monitoring System	B P	
IL	Radiation Monitoring System	B P	
IM	Temperature Monitoring System	B P	
IN	Seismic Monitoring System	B P	
IO	Performance Monitoring System	B P	
IP	Post Accident Monitoring System	B P	
IQ	Sequence of Events Monitoring System	B P	
IR	Television System	B P	
IS	Environmental/Meteorological Monitoring System (Ex. PLT)	B P	
IT	Main Turbine Instrumentation System	B P	
IU	Display Control System	B P	
IV	Vibration Monitoring System	B P	

B—BWR P—PWR

5.60 Security System—IA

5.60.1 System Function. The purpose of the security system is to provide warning of penetration of the plant's perimeter, remote observation of selected plant exterior and interior areas, and access control for key areas throughout the plant.

5.60.2 System Function. The plant security system utilizes an intrusion detection security system for perimeter protection. Closed circuit television cameras are strategically located about the plant for remote observation. As a protection against entry into the plant by an unauthorized individual, an access control system is utilized to control access to key areas throughout the plant.

NOTE: The television monitors of this system are not part of the television system.

5.60.3 Mode of Operation. This system is operating in normal and emergency plant modes.

5.60.4 Major Interfacing Systems

Annunciator System	IB
Record Storage System	LT
Normal AC Lighting System	FF

5.60.5 Major Equipment

Television Cameras and Monitors
Access Control Devices
Intrusion Detection Devices
Search Equipment

5.61 Annunciator System—IB

5.61.1 System Function. The annunciator system provides visual and/or audible indication

Copyright The Institute of Electrical and Electronics Engineers, Inc.
Provided by IHS under license with IEEE
No reproduction or networking permitted without license from IHS

Not for Resale

of normal or abnormal conditions within various areas of the plant.

5.61.2 System Description. The annunciation is normally a visual signal with an audible backup. Annunciation in various major components of the plant may be procurred as a part of the component or other system in which case it would be included in that system. This code provides only for an independent plant annunciation system receiving signals from various elements of the plant and providing its alarm.

5.61.3 Mode of Operation. This system will operate in both normal and emergency situations.

5.61.4 Major Interfacing Systems

Fire Detection System	IC
Low Voltage Power System	EC
Security System	IA
Switchyard System	FK
Integrated Control System	JA
Incore/Excore Monitoring System	IG
Core Vibration Monitoring System	IH
Loose Parts Monitoring System	II
Leak Monitoring System	IJ
Containment Environmental Monitoring System	IK
Radiation Monitoring System	IL
Temperature Monitoring System	IM
Vibration Monitoring System	IV
Feedwater/Steam Generator Level Control System	JB
Solid-State Control System/Auxiliary Logic Control System	JG
Turbine Steam Bypass Control System	JI

5.61.5 Major Equipment

Annunciators
Panels
Logic Cabinets

5.62 Fire Detection System—IC

5.62.1 System Function. The purpose of the fire detection system is to provide an event recording and annunciation system to record and annunciate fire alarms.

5.62.2 System Description. The fire alarms are initiated by smoke and heat detectors, or manual call boxes, or both, from all plant buildings and cable tunnels. Once a sensor or alarm box is activated (1) a printer logs the location and real time of activation, (2) a CRT displays the location, (3) an audible signal sounds, (4) a visual fire alarm signal lights up, and (5) fire suppression equipment activates.

5.62.3 Mode of Operation. This system is operating in normal and emergency plant modes.

5.62.4 Major Interfacing Systems

Annunciator System	IB
Communications System	FI

5.62.5 Major Equipment

Heat and Smoke Detectors
Manual Call Boxes
Multiplexers
CRT's
Printers

5.63 Computer System—ID

5.63.1 System Function. Computers may be used in a generating station to control or monitor the operation of the station, or both, to provide information to the station operator on the functioning of the station, to provide a means of interaction between the operator and various station processes, and to serve as a communications link between station processes and various offsite locations.

5.63.2 System Description. The computer system will typically consist of one or more computers with associated hardware dedicated to each specific unit. A station computer is normally connected to the unit computers and one or more computers dedicated to various common processes throughout the station. The system also includes various peripheral equipment such as printers, CRTs keyboards, and card readers.

5.63.3 Mode of Operation. This system is in operation both in normal and emergency situations.

5.63.4 Major Interfacing Systems

Low-Voltage Power System	EC
Instrument and Uninterruptible Power System	EE
Instrument and Uninterruptible Power System, Class 1E	EF
Solid State Control System/Auxiliary Logic Control System	JG

5.63.5 Major Equipment

Computers
Printers
CRT
Modems
Data Channels

Copyright The Institute of Electrical and Electronics Engineers, Inc.
Provided by IHS under license with IEEE
No reproduction or networking permitted without license from IHS

Not for Resale

5.64 Incore/Excore Monitoring System—IG

5.64.1 System Function. The incore monitoring system is designed to measure the neutron flux inside the reactor core which provides data needed to calculate many core operating characteristics. The excore monitoring system is designed to measure the thermal neutron flux, external to the reactor vessel, which provides information needed for reactor control, reactor protection, and information display.

NOTE: These systems may be grouped with the engineered safeguard systems or with reactor protection systems, or both.

5.64.2 System Description. The incore/excore monitoring system utilizes movable/stationary neutron flux monitors to provide flux mapping data. The incore monitors are typically movable and may be driven remotely to specified locations in a series of tubes within the reactor core. The excore monitors are typically fixed in selected locations external to the reactor vessel.

5.64.3 Mode of Operation. This system is operating in all modes of plant operation.

5.64.4 Major Interfacing Systems

Low-Voltage Power System	EC
Annunciator System	IB
Plant Protection System	JC
Reactor Core System	AC
Integrated Control System	JA

5.64.5 Major Equipment

Proportional Counter 1
Proportional Ionization Chambers
Compensated Ionization Chambers
Fission Chambers
Drive Mechanisms and Facilities

5.65 Core Vibration Monitoring System—IH

5.65.1 System Function. The core vibration monitoring system determines the extent and character of vibrational motion of the reactor internals (core and core barrel) in relation to the reactor vessel and provides an alarm in the event of an excessive change in the vibration.

5.65.2 System Description. The core vibration monitoring system uses vibration instrumentation located within the reactor to monitor vibrational motion and transmit signals to the operator.

5.65.3 Mode of Operation. This system operates in normal and emergency modes.

5.65.4 Major Interfacing Systems

Annunciator System	IB
Plant Protection System	JC

5.65.5 Major Equipment

Vibration Instrumentation
Operator Interface Equipment
Amplifiers

5.66 Loose Parts Monitoring System—II

5.66.1 System Function. The loose parts monitoring system detects the existence of a hydraulically borne loose part within the major plenum of the reactor vessel and both steam generators and upon detection, provides an alarm and identifies the location and impact energy of the loose part.

5.66.2 System Description. The loose parts monitoring system detects the impacts and shocks due to loose parts in the hydraulic flow. Signals are provided to the operator identifying the forces and locations of the impacts.

5.66.3 Mode of Operation. This system operates in normal and emergency modes.

5.66.4 Major Interfacing Systems

Annunciator System	IB
Plant Protection System	JC

5.66.5 Major Equipment

Accelerometers
Preamplifiers
Data Acquisition Equipment
Data Reduction Equipment
Operator Interface Equipment
Signal Conditioning Modules
Amplifiers

5.67 Leak Monitoring System—IJ

5.67.1 System Function. The leak monitoring system monitors process fluid/gaseous leaks within the containment and auxiliary building.

5.67.2 System Description. The system provides alarm to miscellaneous annunciators or the control room, or both, in the event of excess leakage rate. Typically, the system includes fluid collection devices with rate monitoring and alarms (this is not the leak rate test system).

5.67.3 Mode of Operation. This system operates in all modes of plant operation.

5.67.4 Major Interfacing Systems

Closed/Component Cooling Water System	CC
Steam Generator Blowdown System	WI

Copyright The Institute of Electrical and Electronics Engineers, Inc.
Provided by IHS under license with IEEE
No reproduction or networking permitted without license from IHS

 Not for Resale

Low Voltage Power System	EC
Radiation Monitoring System	IL
Annunciator System	IB
Fuel Pool Cooling and Purification System	DA

5.67.5 Major Equipment

Leak Detectors
Transducers
Reloaders
Indicators

5.68 Containment Environmental Monitoring System—IK

5.68.1 System Function. The containment environmental monitoring system monitors the pressure, temperature, gross gamma radiation level, and hydrogen concentration in the containment.

5.68.2 System Description. The containment environmental monitoring system monitors the temperature and pressure in the containment during normal reactor operation. This ensures that the containment environment is suitable for normal power operations or for safe personnel entry for service operations.

The system also monitors the temperature, pressure, hydrogen concentration, and gross gamma radiation in the drywell (BWR) and containment environments under postaccident conditions. Under normal plant conditions, the complete system is operated for tests and calibrations only. The system is automatically put into operation upon receipt of a loss of coolant accident signal from the engineered safety features actuation system. Remote mounted radiation detection assemblies and the hydrogen sampling panel sense the atmospheric conditions in the drywell and containment and send the resulting signals to the electronic assemblies on the main control room panels. This data is then recorded by the respective recorders and displayed on visual indicators. Excessive limits of radiation or hydrogen are alarmed by the annunciator system. An alarm is also provided to indicate when the system is inoperable. A gas supply unit is provided for use in calibrating the hydrogen monitoring equipment. The system consists of various sensors and all equipment necessary to measure, transmit, and display the containment temperature and pressure levels in the main control room.

5.68.3 Mode of Operation. The system is in use during normal operations and postaccident conditions.

5.68.4 Major Interfacing Systems

Engineered Safety Features Actuation System	JE
Annunciator System	IB

5.68.5 Major Equipment

Hydrogen Sample Panel
Radiation Detectors
Temperature Transmitters
Pressure Transmitters
Electronic Assemblies
Display and Recording Equipment

Copyright The Institute of Electrical and Electronics Engineers, Inc.
Provided by IHS under license with IEEE
No reproduction or networking permitted without license from IHS
Not for Resale

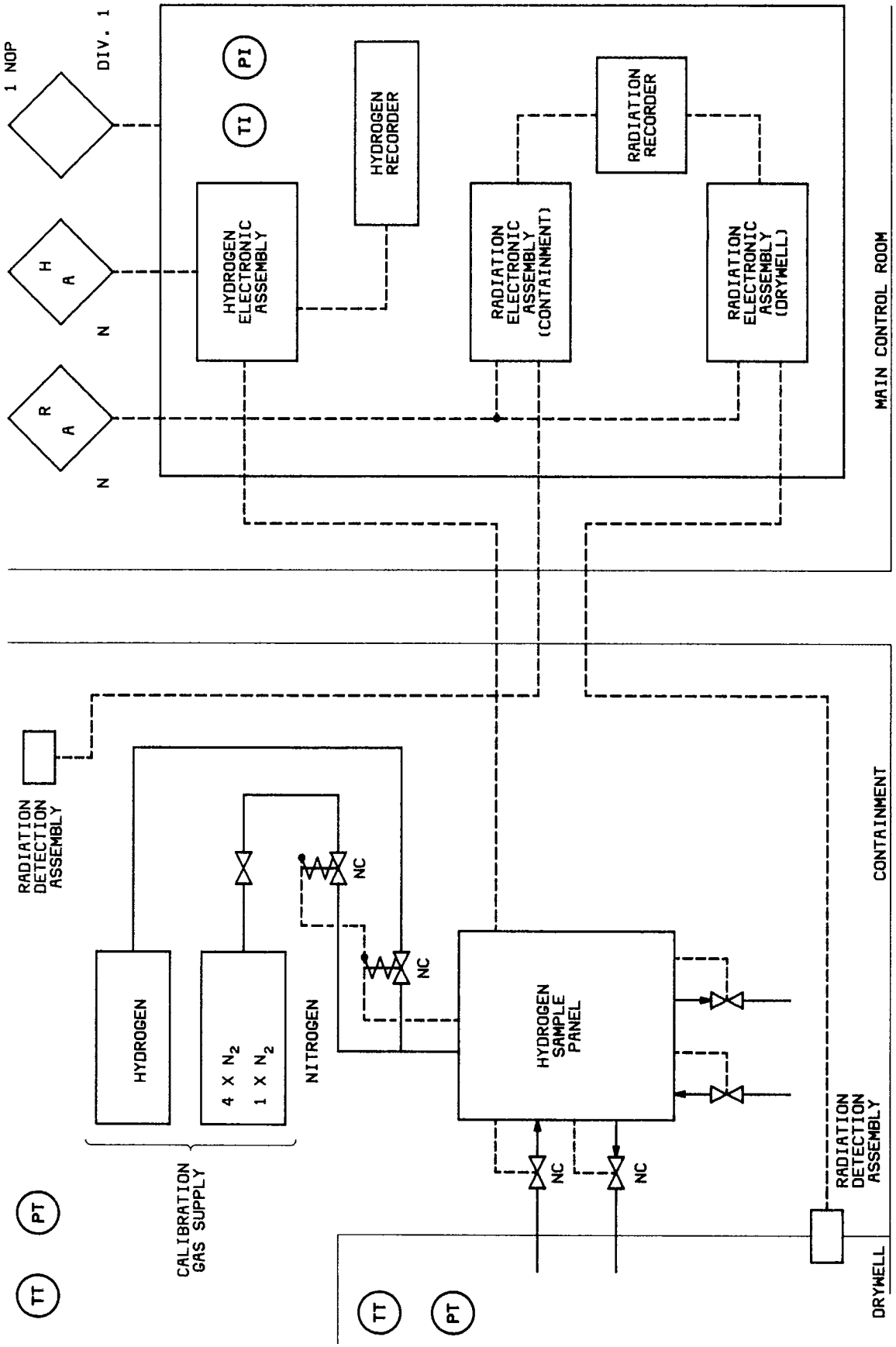

Fig 42
Containment Environmental Monitoring System — IK

Copyright The Institute of Electrical and Electronics Engineers, Inc.
Provided by IHS under license with IEEE
No reproduction or networking permitted without license from IHS

Not for Resale

5.69 Radiation Monitoring System—IL

5.69.1 System Function. The radiation monitoring system provides for monitoring various forms of radiation within the plant.

5.69.2 System Description. The radiation monitoring system includes provision for:

(1) Continuous detection and periodic batch analysis of all radioactive and potentially radioactive process and effluent streams associated with the operation of the nuclear power plant.

(2) Continuous record and indication in the control room of gamma radiation levels at selected areas within various plant buildings where radioactive materials may be present, stored, handled, or inadvertently introduced.

(3) Assessment of the internal dose to plant personnel by way of the inhalation pathway.

5.69.3 Mode of Operation. This system operates in normal and emergency modes of operation.

5.69.4 Major Interfacing Systems. Various plant systems.

Annunciator System	IB
Leak Monitoring System	IJ
Environmental/Meteorological Monitoring System	IS

5.69.5 Major Equipment

Radiation Sensors
Indicators
Recorders
Alarm Systems

5.70 Temperature Monitoring System—IM

5.70.1 System Function. The temperature monitoring system measures environmental temperature in specified areas to track the exposure of equipment and structures to over temperature conditions. This is not the process fluid temperature monitoring.

5.70.2 System Description. The temperature monitoring system includes environmental temperature measuring devices, and the means to transmit and display temperature information to the plant operators.

5.70.3 Mode of Operation. This system is operating in normal and emergency plant modes.

5.70.4 Major Interfacing Systems

Annunciator System	IB
Low-Voltage Power System	EC
Instrument and Uninterruptible Power System	EG
Instrument & Uninterruptible Power System, Class 1E	EF

5.70.5 Major Equipment

Temperature Sensors
Transmitters
Indicators

5.71 Seismic Monitoring System—IN

5.71.1 System Function. The seismic monitoring system is a self-accuated Class 1E monitoring system which detects, records, and annunciates earthquakes which may occur that exceed the ground acceleration for the operating basis earthquake (OBE).

5.71.2 System Description. This system utilizes various types of seismic measuring instrumentation, and recorders to maintain a record of seismic motions.

5.71.3 Mode of Operation. This system is operating in normal plant operation and seismic events.

5.71.4 Main Interface Systems. None.

5.71.5 Major Equipment

Accelerometers
Accelerographs
Recorders
Sensors

5.72 Performance Monitoring System—IO

5.72.1 System Function. The performance monitoring system acquires data from the balance of plant (BOP) and nuclear steam supply systems (NSSS) and performs the functions and calculations defined as necessary for the effective operation of a nuclear plant.

5.72.2 System Description. Remote analog units and remote digital units scan the analog and digital measurements from plant instrumentation, performs signal conditioning, and sends the resulting data to either the BOP or NSSS processors. Data is then checked for error conditions and compared with range and compression limits, converted to engineering units and displayed on a video monitor, trend recorder or hardcopy printer for interpretation by the plant operator. Keyboards are available at the terminals for operator communication with the system.

This provides calculation logs, trends, and historical data for the turbine generator and reactor core with the resulting data used for planning, analysis, and optimum performance of these units.

Copyright The Institute of Electrical and Electronics Engineers, Inc.
Provided by IHS under license with IEEE
No reproduction or networking permitted without license from IHS
Not for Resale

The system includes display generators, video monitors, video copiers, line printers, trend recorders, and operator interface hardware. The processors and memory units are covered by the computer system. The remote analog units and remote digital units are included in the supervisory control and data acquisition subsystem. There is one system per unit.

5.72.3 Mode of Operation. The system is operating in all modes of operation.

5.72.4 Major Interfacing Systems

Instrument and Uninterruptible Power System	EE
Instrument and Uninterruptible Power System, Class 1E	EF
Computer System	ID
Integrated Control System	JA

5.72.5 Major Equipment

Monitors
Copiers
Display Generators

5.73 Post Accident Monitoring System—IP

5.73.1 System Function. The post accident monitoring system provides monitoring and sampling facilities with the ability to obtain, transport, analyze, dispose of, and ship to offsite facilities containment atmosphere and reactor coolant grab samples in an accident situation. Any other monitoring activities following an accident are also included within the system's scope.

5.73.2 System Description. A typical system is usually enclosed within a separate dedicated facility and includes (but is not limited to) equipment provided to:

(1) Obtain the desired reactor coolant water and containment atmosphere samples

(2) Transport reactor coolant water and containment atmosphere grab samples to a transfer station or analysis laboratory at the plant site

(3) Perform all analysis as specified by appropriate regulatory agencies

(4) Safely dispose of all the sampling and flushing fluids

(5) Package the samples for shipment to an offsite facility for additional analysis

5.73.3 Mode of Operation. The system is operating during emergency plant operational modes.

5.73.4 Major Interfacing Systems

Reactor Coolant System	AB
Reactor Containment Building	NH
Miscellaneous service systems such as demineralized water and fire protection	

5.73.5 Major Components. See system description.

5.74 Sequence of Events Monitoring System—IQ

5.74.1 System Function. This classification comprises the application program or programs necessary in the event that a separate dedicated computer or computers is used to meet the sequence of events monitoring the requirements of the generating station.

5.74.2 System Description. The sequence of events system monitors the changes of state of a large number of contacts in the plant and switchyard and records these events either directly or by way of the station computer. This system may be procured and designed integrally with the plant computer.

5.74.3 Mode of Operation. This system operates in normal and abnormal plant modes.

5.74.4 Major Interfacing Systems. Various plant systems.

5.74.5 Major Equipment

Recorders
Computer
Indicators

5.75 Television System—IR

5.75.1 System Function. The purpose of the television system is to provide visual display of events in areas in the plant not normally accessible, or areas remote from the control room where visual observation is desirable for plant control.

5.75.2 System Description. The system is used to enable plant personnel to monitor events where human observation is not possible. The system also serves as a training tool for personnel. For a nuclear plant the four subsystems which make the television system are: the underwater subsystem, the reactor containment subsystem, the radwaste subsystem, and the training subsystem.

Details of the various subsystems are as noted below:

(1) The underwater TV subsystem is used in a documentation of core geometry and fuel assembly location.

(2) The reactor containment TV subsystem is used for monitoring the reactor containment.

Copyright The Institute of Electrical and Electronics Engineers, Inc.
Provided by IHS under license with IEEE
No reproduction or networking permitted without license from IHS

 Not for Resale

Several cameras are remotely controlled from the control room; also, each camera has pan, tilt, and zoom capabilities.

(3) The radwaste TV subsystem consists of a camera that is used to monitor radwaste packaging operations.

(4) The training TV subsystem is made up of portable equipment such as cameras, video tape recorders, and monitors. These are used to document operations and procedures at the plant.

5.75.3 Mode of Operation. The system is operating in all modes of operation.

5.75.4 Major Interfacing Systems

Low-Voltage Power System	EC

5.75.5 Major Equipment

Cameras
Cabling
Video Recorders
Monitors

5.76 Environmental/Meteorological Monitoring System—IS

5.76.1 System Function. The purpose of the environmental/meteorological monitoring system is to provide meteorological information of plant-site atmospheric conditions.

5.76.2 System Description. Sensors mounted on a meteorological tower provide indication of wind speed and direction, dewpoint, temperature, and air pollution. Ground-mounted sensors give readings of barometric pressure, rainfall, and solar radiation. Data from these sensors is fed to an environmental data station. In addition, interface with the main control room is provided through plant operator readout. Microwave and radio antennas are located on the meteorological tower for a data link with other remote environmental data sites. Meteorological data is also fed to the radiation monitoring system where it is used for calculating offsite nuclide releases.

5.76.3 Mode of Operation. This system is operating in normal and emergency plant modes.

5.76.4 Major Interfacing Systems

Low-Voltage Power System	EC
Radiation Monitoring System	IL

5.76.5 Major Equipment. Meteorological sensors.

5.77 Main Turbine Instrumentation System—IT

5.77.1 System Function. The main turbine instrumentation system provides the monitoring required for continuous operation of the turbine-generator complex.

5.77.2 System Description. Instrumentation provides the load and steam flow data required for turbine regulation and provides continuous secondary monitoring of such areas as main bearing vibration, thrust bearing wear, temperature, pressure, etc.

5.77.3 Mode of Operation. The system functions during all modes of plant operation except emergency conditions.

5.77.4 Major Interfacing Systems

Main Turbine System	TA
Main/Reheat Steam System	SB
Station Generation Telemetering System	FJ
Main Turbine Control Fluid System	TG
Main Generation Excitation System	TL

5.77.5 Major Equipment. Instrumentation

5.78 Display Control System—IU

5.78.1 System Function. The display control system provides display of plant process and operating information.

5.78.2 System Description. The system includes analog and digital units and monitors to display selected plant operating parameters.

The display control system equipment is located in the control room and mounted in the main control board and auxiliary relay racks. The arrangement of displays and controls is engineered to facilitiate operator comprehension, analysis, and response to plant operating conditions.

5.78.3 Mode of Operation. This system operates in normal and emergency plant modes.

5.78.4 Major Interfacing Systems

Plant Protection System	JC

5.78.5 Major Equipment

Main Control Board
Relay Racks
Analog and Digital Display Units
Video Monitor Units

5.79 Vibration Monitoring System—IV

5.79.1 System Function. The vibration monitoring system determines the extent and character of vibrational motion on selected plant

Copyright The Institute of Electrical and Electronics Engineers, Inc.
Provided by IHS under license with IEEE
No reproduction or networking permitted without license from IHS

Not for Resale

equipment and provides suitable alarms in the event of excessive vibration.

5.79.2 System Description. The vibration monitoring system uses vibration instrumentation located appropriately on selected plant equipment to monitor vibrational motion and transmit signals to the operator.

5.79.3 Mode of Operation. This system operates in normal and emergency modes.

5.79.4 Major Interfacing Systems

Annunciator System IB

5.79.5 Major Equipment

Vibration Instrumentation
Operator Interface Equipment
Amplifiers

Table 10

	Protection and Control Systems Group	Plant Type		Revision
JA	Integrated Control System	B	P	
JB	Feedwater/Steam Generator Water Level Control System	B	P	
JC	Plant Protection System	B	P	
JD	Reactor Power Control System	B	P	
JE	Engineered Safety Features Actuation System	B	P	
JG	Solid State Control System/Auxiliary Logic Control System	B	P	
JI	Turbine Steam Bypass Control System	B	P	
JJ	Turbine Supervisory Control System	B	P	
JK	Feedwater Pump Turbine Instrumentation and Control System	B	P	
JL	Panels System	B	P	
JM	Containment Isolation Control System	B	P	

B—BWR P—PWR

5.80 Integrated Control System—JA

5.80.1 System Function. The integrated control system is defined to be an integration of the reactor control system/feedwater control system/turbine control system as triggered by megawatt demand.

5.80.2 System Description. The system basically controls reactor reactivity and feedwater control valves and pumps as well as integrates with the turbine EHC controls. These controls are based on megawatt demand.

5.80.3 Mode of Operation. This system operates during normal plant operation.

5.80.4 Major Interfacing Systems

Low-Voltage Power System EC
Annunciator System IB
Plant Protection System JC
Turbine Steam Bypass Control System JI
Incore/Excore Monitoring System IG
Control Rod Drive System AA
Performance Monitoring System IO
Main Turbine System TA

5.80.5 Major Equipment

Controllers
Panels

5.81 Feedwater/Steam Generator Water Level Control System—JB

5.81.1 System Function. The feedwater/steam generator water level control system automatically maintains the water level in the reactor vessel within a predetermined range during all modes of plant operation.

5.81.2 System Description. The system employs a three-element control unit that uses water level, steam flow and feedwater flow as input signals and produces an output signal that controls the speed of the turbine-driven feedwater pumps. A single element control using water level input only is also furnished and provides a level signal that corrects for any mismatch between the steam and feedwater flow which causes the level of the water in the reactor vessel to rise and fall accordingly. In addition to performing control functions, the system provides pressure, temperature, and flow information to permit the plant operator quick evaluation of major equipment performance.

5.81.3 Mode of Operation. This system operates in emergency and normal situations.

Copyright The Institute of Electrical and Electronics Engineers, Inc.
Provided by IHS under license with IEEE
No reproduction or networking permitted without license from IHS

 Not for Resale

5.81.4 Major Interfacing Systems

Feedwater System	SJ
Condensate System	SD
Annunciator System	IB
Plant Protection System	JC
Reactor Recirculation System	AD
Turbine Steam Bypass Control System	JI
Reactor Coolant System (PWR)	AB
Feedwater Pump Turbine Instrumentation and Control System	JK

5.81.5 Major Equipment

Remote Instrumentation
Control Units
Control Room Interface Equipment

5.82 Plant Protection System—JC

5.82.1 System Function. The plant protection system initiates a rapid automatic shutdown (scram) of the reactor and serves to prevent the release of radioactive materials to the environment upon a rupture of primary or secondary reactor pressure boundaries.

5.82.2 System Description. The system continuously monitors selected safety-related plant parameters (that is, neutron flux, reactor pressurizer pressure, steam generator pressure, reactor coolant temperature, etc) in a reliable manner, so as to ensure a known plant status at all times. The system automatically initiates plant protective action by actuating the appropriate plant systems whenever the monitored plant parameters reach predetermined levels. The system also automatically provides alarms, and in some cases limiting signals to control systems, whenever the monitored plant parameters approach the level where plant protection is required.

5.82.3 Mode of Operation. The system is operating during all modes of plant operation, but only causes some plant action during emergency conditions.

5.82.4 Major Interfacing Systems

Control Rod Drive System	AA
Main Generator Output Power System	EL
Incore/Excore Monitoring System	IG
Core Vibration Monitoring System	IH
Loose Parts Monitoring System	II
Integrated Control System	JA
Feedwater/Steam Generator Water Level Control System	JB
Display Control System	JC
Solid State Control System/Auxiliary Logic Control System	JG

5.82.5 Major Equipment

Sensors
Transducers
Logic Circuits
Relays
Control Panels
Instrumentation and Controls

5.83 Reactor Power Control System—JD

5.83.1 System Function. The reactor power control system adjusts the reactor power level following load demands from the turbine-generator set.

5.83.2 System Description. The system produces the desired power level by varying the control rod position within the reactor core. The system also monitors the steam generator level, the reactor coolant temperature and the feedwater flow, maintaining the pressurizer level and pressure at values consistent with the required power level. At a BWR plant the system controls the neutron flux by manipulating the control rods.

5.83.3 Mode of Operation. The system operates during normal and emergency conditions.

5.83.4 Major Interfacing Systems

Reactor Coolant System (PWR)	AB
Reactor Recirculation System (BWR)	AD
Control Rod Drive System	AA
Feedwater System	SJ

5.83.5 Major Equipment

Sensors
Transducers
Relays
Switchgears
Electrical Modules
Control Panels
Instrumentation and Controls

5.84 Engineered Safety Features Actuation System—JE

5.84.1 System Function. The engineered safety features actuation system actuates selected safety systems upon receipt of an appropriate triggering signal from the plant operations.

5.84.2 System Description. The engineered safety features actuation system includes the instrumentation and control components, modules, and other equipment that operates to maintain plant parameters within accceptable limits during a design basis event. Typically, the engineered safety features actuation system initiates emergency negative radio-

Copyright The Institute of Electrical and Electronics Engineers, Inc.
Provided by IHS under license with IEEE
No reproduction or networking permitted without license from IHS

activity insertion, post-accident heat removal, emergency core cooling, post-accident radioactivity removal, and containment isolation.

5.84.3 Mode of Operation. This system operates in emergency operating modes.

5.84.4 Major Interfacing Systems

Auxiliary/Emergency Feedwater System	BA
Low-Voltage Power System—Class IE	ED
Closed/Component Cooling Water System	CC
Chilled Water System	KM
Various HVAC Systems	
Containment Environmental Monitoring System	IK
Containment Spray System (PWR)	BE
Essential Service Water System	BI
Containment Fan Cooling System (PWR)	BK
Residue Heat Removal/Low Pressure Safety Injection System (PWR)	BP
High-Pressure Safety Injection System (PWR)	BQ

5.84.5 Major Equipment

Load Sequencer
Instrumentation and Control Devices
Control Panels
Electrical Modules
Relays

5.85 Solid-State Control System/Auxiliary Logic Control System—JG

5.85.1 System Function. The solid-state control system/Auxiliary logic control system is a collection of electrical and electronic solid-state combinational and sequential logic circuits that provide the signal conditioning, logic, and device actuation functions for plant process control.

5.85.2 System Description. Signals from remote mounted equipment such as transmitters, switches, relay contacts, and trip circuits are fed to the SSCS where they are signal conditioned. The logic outputs are used by solid-state switches to drive such devices as motor starters, electrically-operated switchgear, and electromechanical devices for a variety of plant systems. Electrical isolation and physical separation are provided for circuits that transmit signals between cabinets, annunciators, and selected plant systems. The SSCS is also capable of manually-initiated automatic self-diagnosis and annunciation of system malfunctions.

The SSCS consists of termination and logic cabinets and the internally-mounted equipment. The controls, controlled components, and sensors are covered by their applicable EIIS systems.

There is one system per unit.

5.85.3 Mode of Operation. This system is operating in normal and emergency modes.

5.85.4 Major Interfacing Systems

Annunciator System	IB
Computer System	ID
Plant Protection System	JC

5.85.5 Major Equipment. Termination and logic cabinets with internally mounted equipment.

5.86 Turbine Steam Bypass Control System —JI

5.86.1 System Function. The turbine steam bypass control system maximizes plant availability by making full utilization of the turbine bypass valve capacity to include load rejections of any magnitude including a turbine trip from 100% rated power.

5.86.2 System Description. This system monitors system flow, main steam pressure and pressurizer pressure. Control is achieved by substituting the turbine bypass valves for the turbine as too large of a power mismatch is detected. Although the primary reason for the design of the system is the accomodation of large load rejections, it also operates to limit power mismatches regardless of where the disturbance originates.

5.86.3 Mode of Operation. This system operates in both emergency and normal operating conditions.

5.86.4 Major Interfacing Systems

Condenser System	SG
Low-Voltage Power System	EC
Annunciator System	IB
Feedwater/Steam Generator Water Level Control System	JB
Main/Reheat Steam System	SB
Integrated Control System	JA

5.86.5 Major Equipment

5.87 Turbine Supervisory Control System —JJ

5.87.1 System Function. The turbine supervisory control system provides all monitoring and control operations for the continuous operation of the Turbine-Generator complex.

Copyright The Institute of Electrical and Electronics Engineers, Inc.
Provided by IHS under license with IEEE
No reproduction or networking permitted without license from IHS

Not for Resale

5.87.2 System Description. Speed/load control is accomplished by positioning of the main control valves to regulate the steam flow to each turbine. The control valves are operated by piston-type servo-motors which use as a hydraulic medium the pressurized fire-retardant hydraulic fluid supplied by the main turbine control fluid system. Instrumentation provides the load and steam flow data required for turbine regulation and provides continuous secondary monitoring of such areas as main bearing vibration, thrust bearing wear, temperature, and pressure.

5.87.3 Mode of Operation. This system operates in emergency and normal operating situations.

5.87.4 Major Interfacing Systems

Main Turbine System	TA
Main Generator Excitation System	TL
Main Turbine Control Fluid System	TG

5.87.5 Major Equipment

5.88 Feedwater Pump Turbine Instrumentation and Control System—JK

5.88.1 System Function. The feedwater pump turbine instrumentation and control system provides monitoring and control operations for the continuous operation of the turbine-driven main feedwater pumps.

5.88.2 System Description. Speed/load control is accomplished by positioning of control valves to regulate the steam flow to the turbine. Instrumentation provides load and steam flow required for turbine regulation and provides continuous secondary monitoring of such areas as bearing vibration and wear, temperature, pressure, etc.

5.88.3 Mode of Operation. The system operates during normal plant operation.

5.88.4 Major Interfacing Systems

Feedwater System	SJ
Feedwater/Steam Generator Water Level Control System	JB
Main/Reheat Steam System	SB

5.88.5 Major Components.
Instrumentation

5.89 Panels System—JL

5.89.1 System Function. The panels system encompasses all panels containing I & C components that are associated with more than one system.

5.89.2 System Description. This system includes the panels for mounting I & C devices and miscellaneous devices associated with more than one system. The system does not include I & C devices associated with other systems that are mounted or contained in the panels.

NOTE: Local panels defined as those being uniquely identified with one system only are not included (that is, the panel is a component of that particular system).

5.89.3 Mode of Operation. This system is in normal and emergency modes of operation.

5.89.4 Major Interfacing Systems
Various I & C Systems
Various Systems

5.89.5 Major Equipment
Panel Boards
Terminal Blocks
Conduit
Internal Wiring
Ground Bus
Connectors
Heaters
Fans

5.90 Containment Isolation Control System —JM

5.90.1 System Function. The purpose of the containment isolation control system is to provide the control means by which the various fluid systems which penetrate the reactor containment can be reliably isolated.

5.90.2 System Description. Containment isolation is generally accomplished by utilization of the penetrating system's isolation valves. The system includes NSSS shutoff system actuation logic and any isolation valves not internal to a penetrating system.

5.90.3 Mode of Operation. This system is operating in emergency operating modes.

5.90.4 Major Interfacing Systems. Any plant system having piping penetrations of the primary containment.

5.90.5 Major Equipment
Logic Modules
Circuit Breakers
Relays
Switches
Instruments
Valves
Valve Operator

Copyright The Institute of Electrical and Electronics Engineers, Inc.
Provided by IHS under license with IEEE
No reproduction or networking permitted without license from IHS

Not for Resale

Table 11

	Water, Chemical, and Drainage Systems Group	Plant Type		Revision
KA	Condensate Storage and Transfer System	B	P	
KB	Turbine Building Closed Cooling Water System	B	P	
KC	Demineralized Water Storage and Transfer System	B	P	
KD	Condensate and Feedwater Chemistry Control System	B	P	
KE	Heat Rejection System	B	P	
KF	Heat Rejection Chemical Treatment System	B	P	
KG	Nonessential Service Water System	B	P	
KH	Water Filtration System	B	P	
KI	Raw Water Makeup System	B	P	
KJ	Makeup Demineralizer System	B	P	
KK	Potable Water Distribution System	B	P	
KL	Removable Chemical Cleaning System	B	P	
KM	Chilled Water System	B	P	
KN	Sampling and Water Quality System	B	P	
KO	Gland Seal Water Supply System	B	P	
KP	Fire Protection System (Water)	B	P	
KQ	Fire Protection System (Chemical)	B	P	

B—BWR P—PWR

Copyright The Institute of Electrical and Electronics Engineers, Inc.
Provided by IHS under license with IEEE
No reproduction or networking permitted without license from IHS

Not for Resale

5.91 Condensate Storage and Transfer System—KA

5.91.1 System Function. The condensate storage and transfer system provides water storage for the control of water inventory by receiving, storing, and transferring excess water from the condensate system or makeup demineralized system.

5.91.2 System Description. The condensate storage and transfer system consists of: a storage tank, a condensate transfer pump, and the necessary piping and valves.

5.91.3 Mode of Operation. The system is operating in normal and emergency conditions.

5.91.4 Major Interfacing Systems

Auxiliary/Emergency Feedwater System	BA
Makeup Demineralizer System	KJ
Reactor Core Isolation Cooling System (BWR)	BN
Liquid Waste Management System	WD
Condensate System	SD
High-Pressure Core Spray System (BWR)	BG
High-Pressure Coolant Injection (BWR)	BJ
Isolation Condenser System (BWR)	BL
Low-Pressure Core Spray System	BM
Control Rod Drive System	AA
Demineralized Water Storage and Transfer System	KC
Gland Seal Water Supply System	KO
Solid Waste Management System	WB
Low-Voltage Power System	EC

5.91.5 Major Equipment

Condensate Storage Tank
Condensate Transfer Pump

Copyright The Institute of Electrical and Electronics Engineers, Inc.
Provided by IHS under license with IEEE
No reproduction or networking permitted without license from IHS
Not for Resale

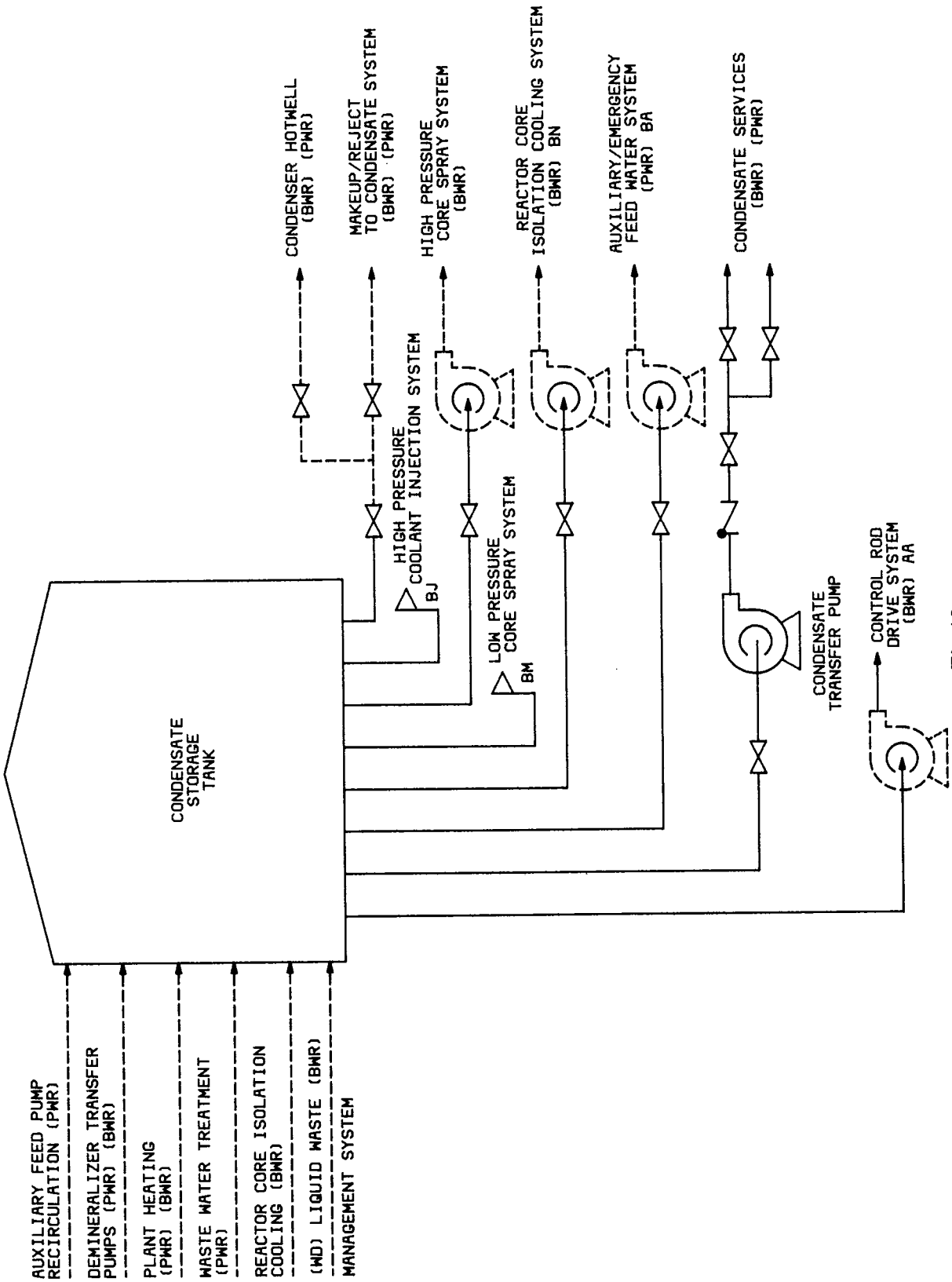

Fig 43
Condensate Storage and Transfer System — KA

Copyright The Institute of Electrical and Electronics Engineers, Inc.
Provided by IHS under license with IEEE
No reproduction or networking permitted without license from IHS

Not for Resale

5.92 Turbine Building Closed Cooling Water System—KB

5.92.1 System Function. The turbine building closed cooling water system provides high quality cooling water for auxiliary equipment cooling loads in the turbine building.

5.92.2 System Description. The system provides high quality cooling water for turbine building equipment which should not be cooled with raw service because of corrosion and fouling considerations. Typically, the system consists of a closed cooling water loop of demineralized water with corrosion inhibitors. The cooling water loop typically includes redundant pumps and heat exchangers. The heat exchangers are cooled by the non-essential service water system.

5.92.3 Mode of Operation. The system is in use during normal, startup, and shutdown operations.

5.92.4 Major Interfacing Systems. The following list of interfacing systems includes typical system cooling loads which vary according to station design.

Non-Essential Service Water System	KG
Condensate System	SD
High Pressure Heater and Moisture Separator Reheater Drains and Vents System	SN
Feedwater System	SJ
Main Turbine Control Fluid System	TG
Main Generator Excitation System	TL
Condenser Vacuum System	SH
Sampling and Water Quality System	KN

5.92.5 Major Equipment

Pumps
Heat Exchangers
Surge Tank

5.92.6 Typical Cooling Loads

Condensate Pump Coolers
Condensate Motor Coolers
Condensate Booster Pump Coolers
Condensate Booster Pump Motor Coolers
EHC Coolers
Generator Bus Duct Coolers
Heater Drain Pump Coolers
Heater Drain Pump Motor Coolers
SG Feed Pump Turbine Oil Coolers
Turbine Building Sample Station
Alternator Exciter Coolers

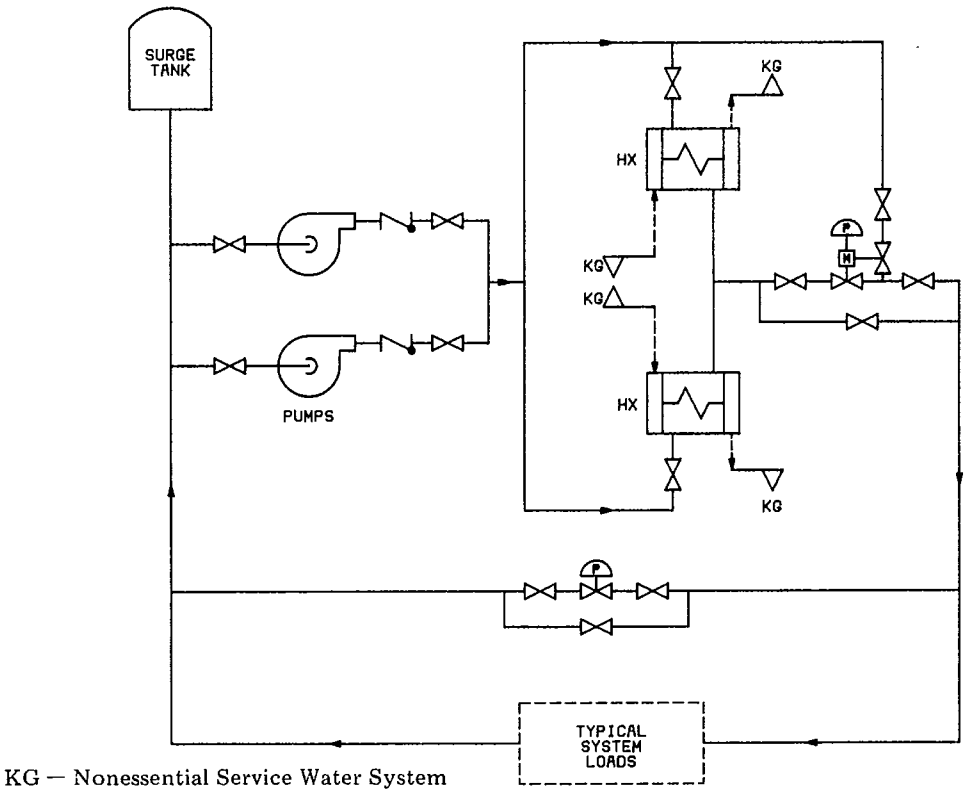

Fig 44
Turbine Building Closed Cooling Water System — KB

Copyright The Institute of Electrical and Electronics Engineers, Inc.
Provided by IHS under license with IEEE
No reproduction or networking permitted without license from IHS
Not for Resale

5.93 Demineralized Water Storage and Transfer System—KC

5.93.1 System Function. The demineralized water storage and transfer system stores demineralized water from the makeup demineralizer system and distributes it to various plant systems.

5.93.2 System Description. The demineralized water storage and transfer system consists of storage tanks, transfer pumps, piping, valves, and instrumentation and controls necessary for the operation of the system.

5.93.3 Mode of Operation. The system is operating in all modes of operation.

5.93.4 Major Interfacing Systems

Makeup Demineralizer System	KJ
Condensate Storage and Transfer System	KA
Fuel Pool Cooling and Purification System	DA
Chilled Water System	KM
Plant Hot Water System	LV
Auxiliary Steam System	SA
Cask Decontamination System	WA
Main Generator Stator Cooling System	TJ
Condensate and Feedwater Chemistry Control System	KD
Removable Chemical Cleaning System	KL
Gland Seal Water Supply System	KO
Control Building/Control Complex Environmental Control System	VI

5.93.5 Major Equipment

Demineralized Water Storage Tank
Demineralized Water Transfer Pump

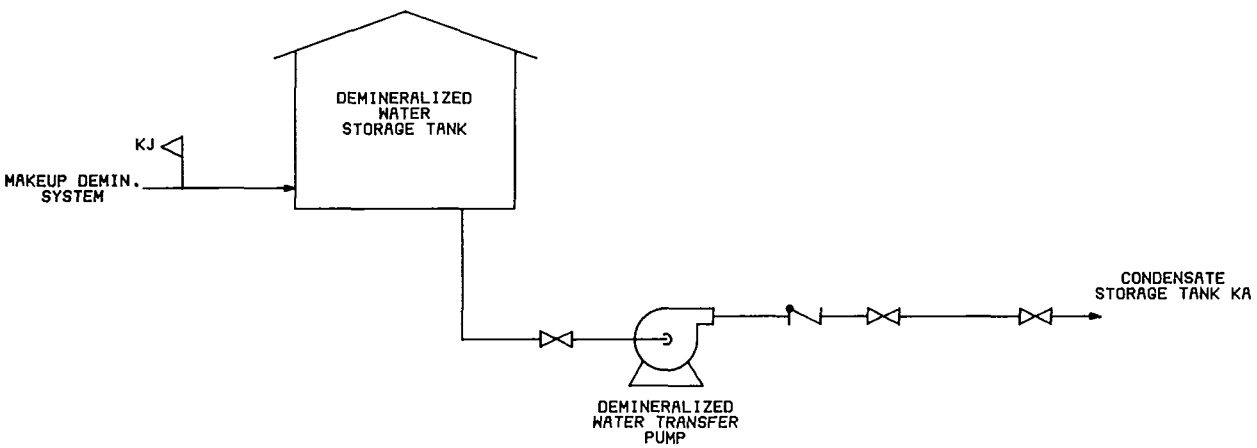

Fig 45
Demineralized Water Storage and Transfer System — KC

5.94 Condensate and Feedwater Chemistry Control System—KD

5.94.1 System Function. The condensate and feedwater chemistry control system serves to retard corrosion and fouling of the steam water systems of the steam cycle by regulating the chemical composition of the feedwater.

5.94.2 System Description. The most typical method of controlling the chemical makeup of the feedwater is through the injector of ammonia, for pH control of the water, and hydrazine, for dissolved oxygen level control, into the feedwater flow. Under some conditions, phosphate solutions may also be added. A typical system would consist of storage tanks, mixing tanks, chemical feed (metering) pump, piping, valves, and instrumentation and controls as necessary. As required, the chemical feed pumps take solutions from the storage or mixing tanks and inject it into the feedwater flow.

5.94.3 Mode of Operation. The system operates during all modes of plant operation.

5.94.4 Major Interfacing Systems

Low-Voltage Power System	EC
Feedwater System	SJ
Demineralized Water Storage and Transfer System	KC

5.94.5 Major Equipment

Pumps (metering or chemical feed)
Tanks
Piping
Valves
Instrumentation
Controls

Copyright The Institute of Electrical and Electronics Engineers, Inc.
Provided by IHS under license with IEEE
No reproduction or networking permitted without license from IHS
Not for Resale

5.95 Heat Rejection System—KE

5.95.1 System Function. The heat rejection system removes waste heat from the main condenser and transfers it to the environment.

5.95.2 System Description. The system circulates cooling water through the main condenser to remove waste heat from the condensation of steam from the main turbine exhaust. The system may also provide cooling water for some plant auxiliaries such as the feedwater pump turbine condensers. After absorbing the waste heat, the cooling water flows to the plant heat dissipation device which may be any one of the following, depending upon the site specific design: a natural body of water (river, lake, ocean), a manmade cooling reservoir, or cooling towers. The waste heat is rejected to the environment and the cooling cycle begins anew with circulating water pumps taking a suction on the heat sink.

5.95.3 Mode of Operation. The system is in use during normal operation.

5.95.4 Major Interfacing Systems

Condenser System	SG
Non-Essential Service Water System	KG
Condenser Tube Cleaning System	SI
Heat Rejection Chemical Treatment System	KF
Wastewater Disposal System	WH
Fire Protection System (Water)	KP
Heat Rejection System	KG
Raw Water Makeup System	KI

5.95.5 Major Equipment

Circulating Water Pumps
Plant Heat Sink (cooling towers, etc.)
Traveling Water Screens
Traveling Water Screen Wash Equipment
Stop Logs
Makeup Water Pumps

Copyright The Institute of Electrical and Electronics Engineers, Inc.
Provided by IHS under license with IEEE
No reproduction or networking permitted without license from IHS

Not for Resale

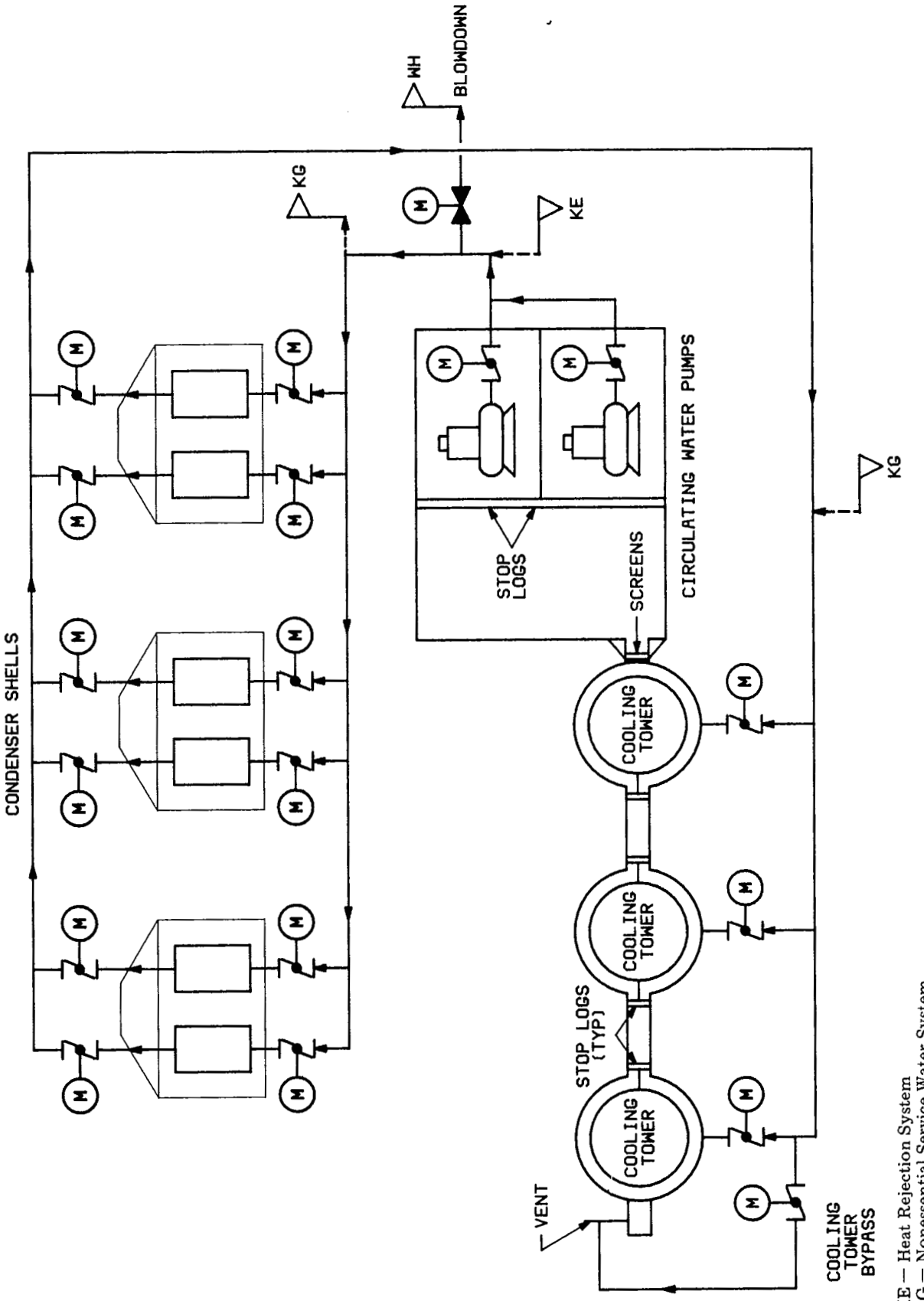

KE — Heat Rejection System
KG — Nonessential Service Water System
WH — Wastewater Disposal System

Fig 46
Heat Rejection System — KE

Copyright The Institute of Electrical and Electronics Engineers, Inc.
Provided by IHS under license with IEEE
No reproduction or networking permitted without license from IHS

Not for Resale

5.96 Heat Rejection Chemical Treatment System—KF

5.96.1 System Function. The heat rejection chemical treatment system is designed to produce and distribute chemical solutions and additives to control organic fouling and deposits in various water systems.

5.96.2 System Description. The heat rejection chemical treatment system is purchased as a pre-engineered and fabricated system furnished as skid mounted component modules, complete with all required piping, valves, and instrumentation.

5.96.3 Mode of Operation. The system is used in normal and emergency operating conditions.

5.96.4 Major Interfacing Systems

Essential Service Water System	BI
Fire Protection System (Water)	KP
Ultimate Heat Sink System	BS
Heat Rejection System	KE

5.96.5 Major Equipment

Hydraulic Skid Module
Electrolytic Cell Skid
Storage Tanks
Lixiviator
Surge Tank
Nitrogen Bottles
Metering Pumps
Booster Pumps

5.97 Non Essential Service Water System —KG

5.97.1 System Function. The non-essential service water system provides raw cooling water for power conversion cycle auxiliary equipment, HVAC equipment, and other miscellaneous cooling loads.

5.97.2 System Description. A typical system provides raw cooling water to station auxiliary equipment which does not contain radioactive water and is not required to operate following an accident. Typically, most of the equipment served is located in the Turbine Building. Usually, the system uses the heat rejection system as the means to reject waste heat from the cooling loads.

For a typical system, the pumps take suction from the heat rejection system and pump the water through the system's cooling loads. The water is then returned to the heat rejection system for rejection of the waste heat and return to the pumps.

5.97.3 Mode of Operation. The system is in use during normal, startup, and shutdown operations.

5.97.4 Major Interfacing Systems. The following list of interfacing systems includes typical cooling loads which vary acording to station design.

Turbine Building Closed Cooling Water System	KB
Chilled Water System	KM
Main Generator Stator Cooling System	TJ
Turbine Lube Oil System	TD
Main Generator Hydrogen Cooling System	TK
Heat Rejection System (HR)	KE
Containment Ice Condenser System (PWR)	BC
Radwaste Building Environmental Control System	VH
Turbine Building Environmental Control System	VK

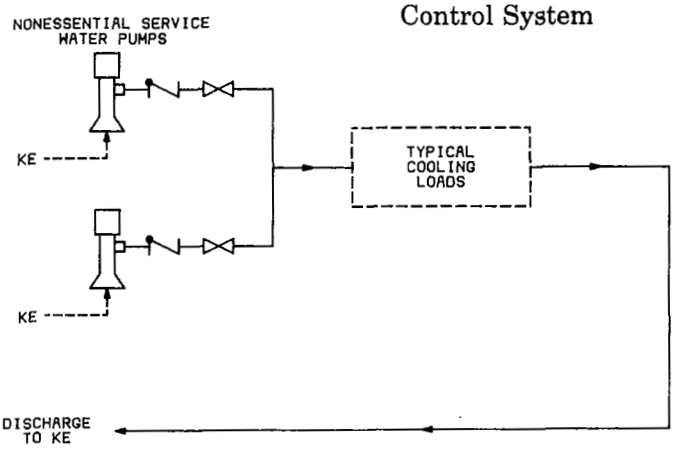

KE — Heat Rejection System

Fig 47
Non-Essential Service Water System — KG

Copyright The Institute of Electrical and Electronics Engineers, Inc.
Provided by IHS under license with IEEE
No reproduction or networking permitted without license from IHS
Not for Resale

5.97.5 Major Equipment

Pumps
Piping
Controls

5.98 Water Filtration System—KH

5.98.1 System Function. The water filtration system removes the heavy particles found in raw river waters. Alum is injected in a clarifier tank to flocculate the suspended particles found in raw water bodies. Caustic is fed to control the pH level of the alum mixing. Coagulant is fed to agglomerate and precipitate the flocculi in suspension found in the clarifier tank.

5.98.2 System Description. The water filtration system starts a tie-in point located on the discharge line of the cooling tower makeup water pump. It feeds a booster pump that in turn supplies raw water to a clarifier tank. Injection pumps draw upon: caustic-alum and coagulant tanks to individually inject into clarifier tanks. Overflow of the clarifier tank is aped to clearwell which feeds clearwell pumps. These pumps piping through filters feed a clarifier water storage tank.

5.98.3 Mode of Operation. The system operates during normal, startup, shutdown, and accident conditions.

5.98.4 Major Interfacing Systems

Ultimate Heat Sink System	BS
Makeup Demineralizer System	KJ
Potable Water Distribution System	KK
Raw Water Makeup System	KI
Wastewater Disposal System	WH
Sludge Waste Dewatering System	WJ

5.98.5 Major Equipment

Raw Water Booster Pumps
Caustic Feed Tank and Pump
Alum Feed Tank and Pump
Coagulant Tank and Pump
Clarifier Tank
Clearwell
Clearwell Pumps
Filters
Clarified Water Storage Tank

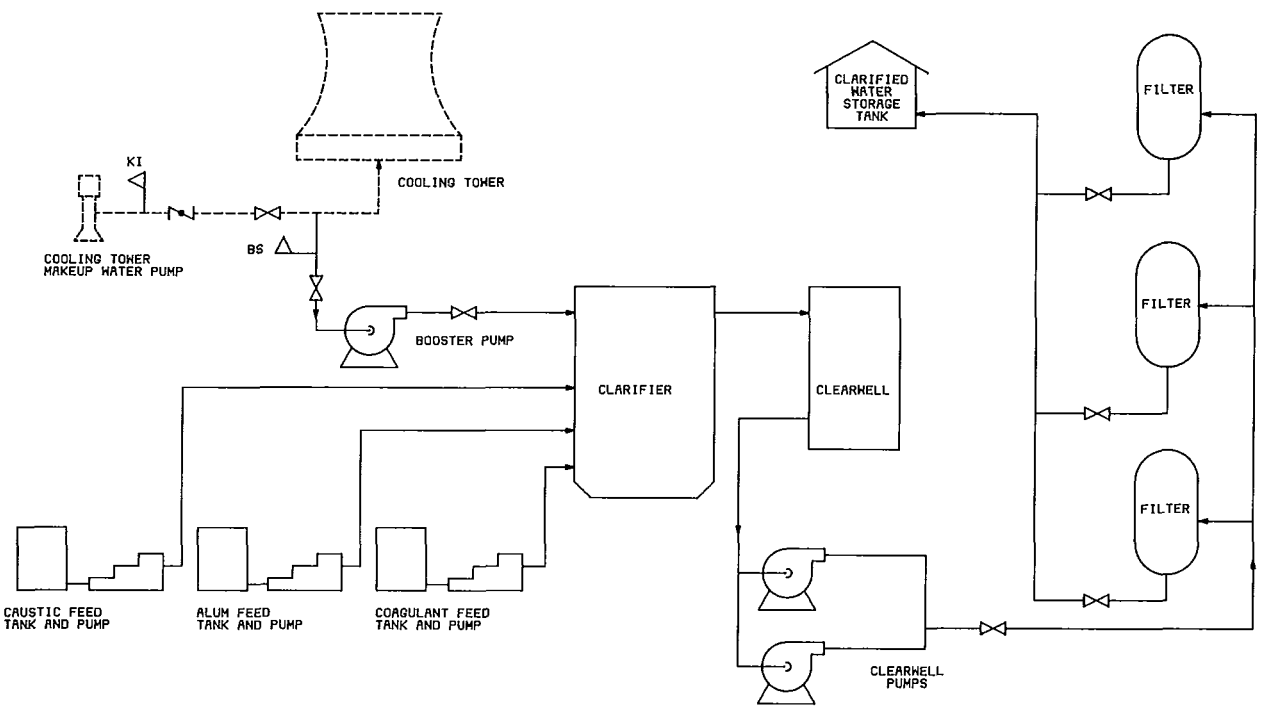

BS — Ultimate Heat Sink System
KI — Raw Water Makeup System

Fig 48
Water Filtration System — KH

Copyright The Institute of Electrical and Electronics Engineers, Inc.
Provided by IHS under license with IEEE
No reproduction or networking permitted without license from IHS

Not for Resale

5.99 Raw Water Makeup System—KI

5.99.1 System Function. The raw water makeup system supplies untreated water for cooling purposes as makeup to those systems using raw cooling water and subject to system losses. The system primarily serves those systems which do not employ a once through cooling method, such as the heat rejection system.

5.99.2 System Description. The system consists basically of a parallel arrangement of pumps which take water from the raw water reservoir (lake, pond, river, wells, etc) and supplies it on an *as needed basis* to the system or systems requiring makeup water.

5.99.3 Mode of Operation. The system operates on as as needed basis during all modes of plant operation, except during emergency plant operational modes.

5.99.4 Major Interfacing Systems

Medium-Voltage Power System	EA
Heat Rejection System	KE
Water Filtration System	KH

5.99.5 Major Equipment

Pumps
Piping
Instrumentation and Controls

5.100 Makeup Demineralizer System—KJ

5.100.1 System Function. The makeup demineralizer system is designed to process, store and distribute demineralized water to the demineralized water services and the condensate storage tank. The demineralizing process removes organic and dissolved solids from the raw pretreatment system.

5.100.2 System Description. Raw water is first pumped through a bank of carbon filters to remove organic impurities. It is then processed through redundant trains of cation, anion, and mixed bed demineralizers to control the level of dissolved solids. These demineralizers are regenerated by sulfuric acid, and caustic soda stored in individual tanks and distributed by proportioning pumps. Wastes of the regeneration process are collected in a neutralizing tank and are neutralized by adding acid or caustic, or both, as required prior to releasing the discharge to the waste water treatment system. A neutralizing tank recirculation pump maintains the waste water thoroughly mixed. Demineralized water is stored in tank and distributed through transfer pumps to the demineralized water services requirements in the plant, and to the condensate storage tank.

5.100.3 Mode of Operation. This system is in use during all plant operating modes.

5.100.4 Major Interfacing Systems

Condensate System	SD
Condensate Storage and Transfer System	KA
Demineralized Water Storage and Transfer System	KC
Sampling and Water Quality System	KN
Wastewater Disposal System	WH
Water Filtration System	KH

5.100.5 Major Equipment

Carbon Filter Tanks
Cation Demineralizer Tanks
Anion Demineralizer Tanks
Mixed Bed Demineralizing Tanks
Acid Tank
Caustic Tank
Acid Feed Pump
Neutralizing Tank
Recirculation Pump
Demineralized Water Storage Tanks
Demineralized Water Transfer Pumps
Piping-Valves and Instrumentation
Caustic Feed Pump

Copyright The Institute of Electrical and Electronics Engineers, Inc.
Provided by IHS under license with IEEE
No reproduction or networking permitted without license from IHS

Not for Resale

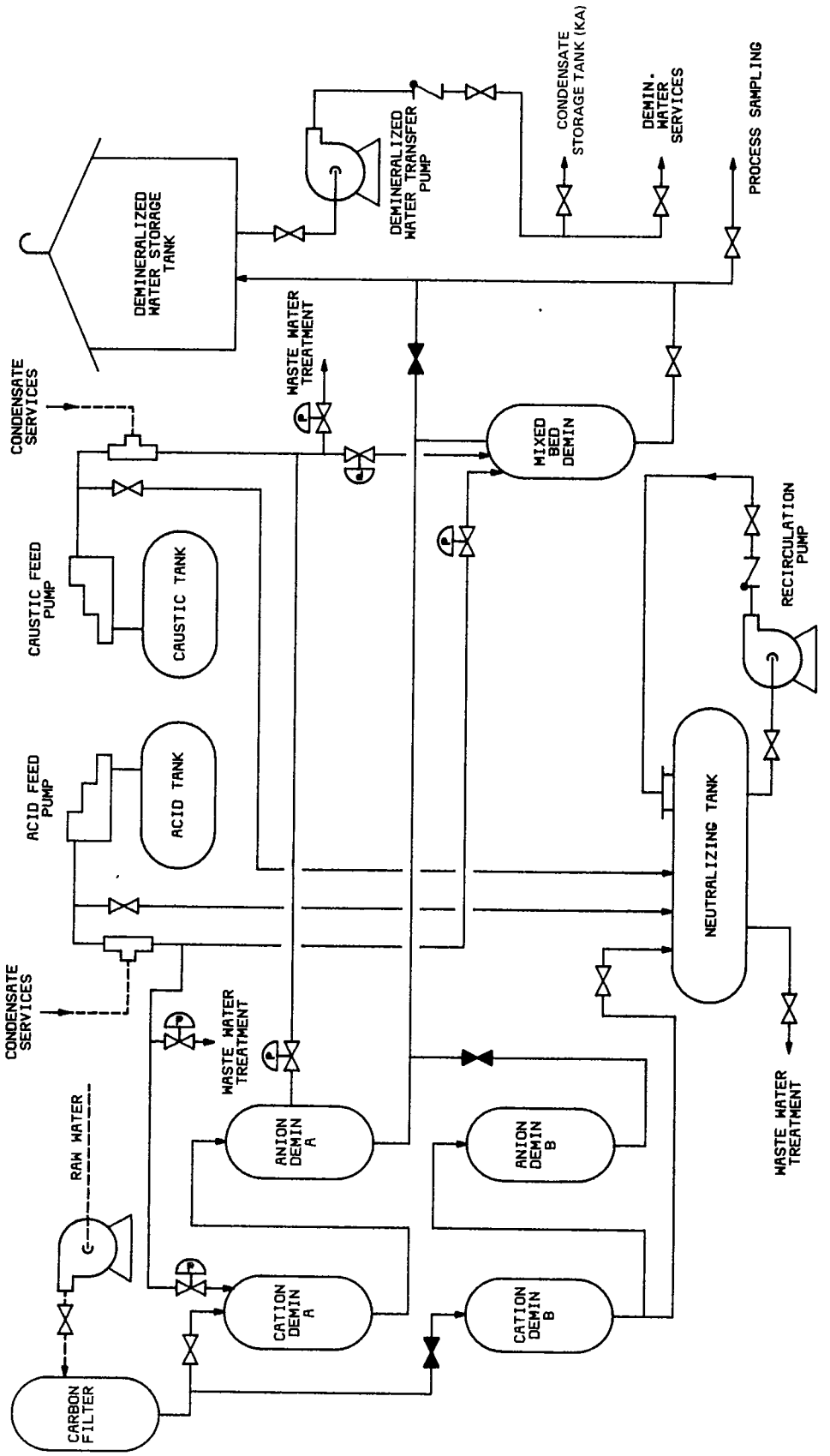

Fig 49
Makeup Demineralizer System — KJ

Copyright The Institute of Electrical and Electronics Engineers, Inc.
Provided by IHS under license with IEEE
No reproduction or networking permitted without license from IHS
Not for Resale

5.101 Potable Water Distribution System —KK

5.101.1 System Function. The potable water or domestic water distribution system has two main functions:

(1) Treatment of raw water for domestic use

(2) Distribution of potable water for domestic purposes

The potable water distribution system is designed to provide water suitable for human consumption to be used by the administrative, operations and maintenance personnel of a power plant.

Raw water for domestic water use is first softened to reduce water hardness and then hypochlorinated for bacterial removal and disinfection.

5.101.2 System Description. The potable water distribution system consists of a softener package pre-engineered, fabricated, and furnished as a skid module complete with: zeolite filters, salt storage and brine measuring tank, hypochlorite feed tank, and proportioning feed pumps. Softened water is then stored in a domestic storage tank. A train of domestic water transfer pumps provides potable water to the domestic water distribution tank or to the domestic services, or both.

5.101.3 Mode of Operation. This system is in use during all plant operating modes.

5.101.4 Major Interfacing Systems

Water Filtration System KH

5.101.5 Major Equipment

Water Softener Package Skid Mounted
Domestic Water Storage Tank
Domestic Water Transfer Pumps
Domestic Water Distribution Tank
Piping, Valves, and Instrumentation

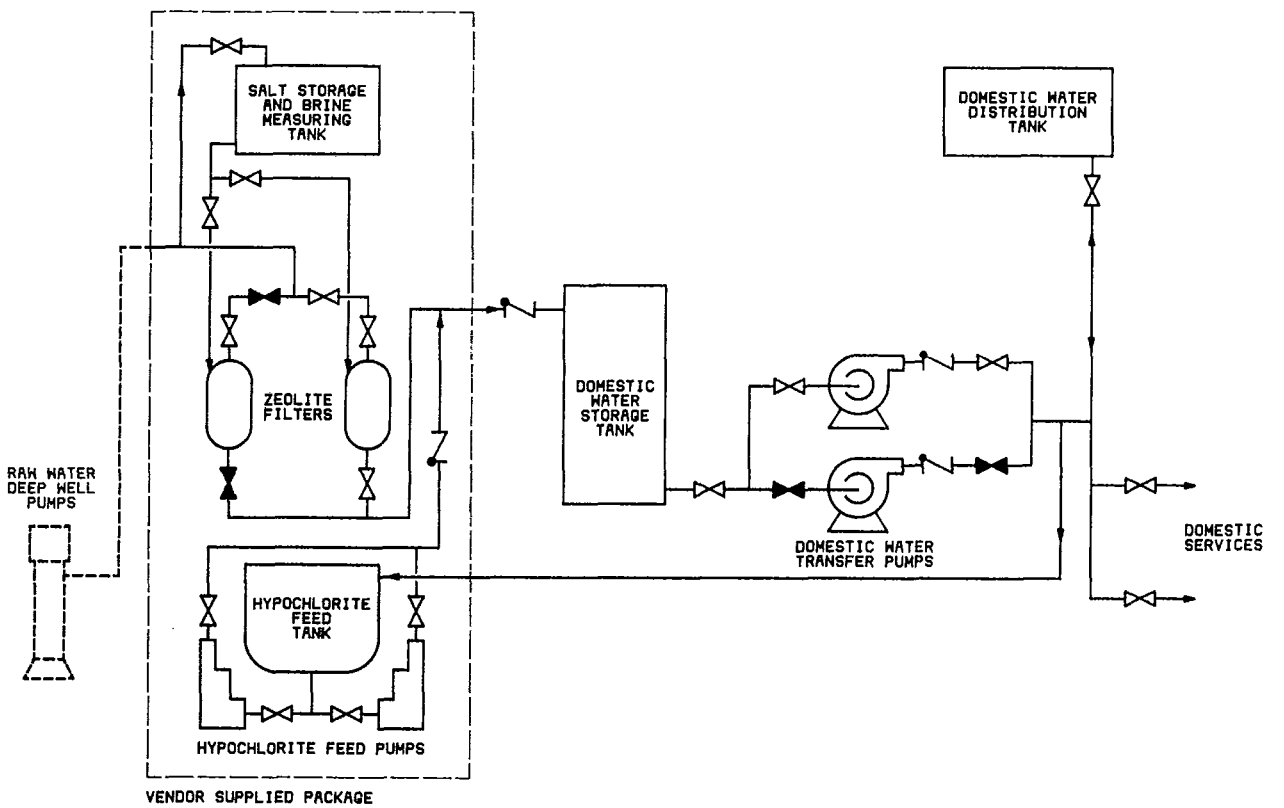

Fig 50
Potable Water Distribution System — KK

Copyright The Institute of Electrical and Electronics Engineers, Inc.
Provided by IHS under license with IEEE
No reproduction or networking permitted without license from IHS
Not for Resale

5.102 Removable Chemical Cleaning System —KL

5.102.1 System Function. The removable chemical cleaning system provides a means by which system piping and components are cleaned of rust, grease, and debris prior to plant startup. The cleaning is done on a system by system basis using demineralized water flushes, and on some systems detergent flushes.

5.102.2 System Description. The system consists primarily of temporary and portable pumps, valves, heat exchangers, mixing tanks, piping, and instrumentation.

5.102.3 Mode of Operation. This system is in use prior to startup.

5.102.4 Major Interfacing Systems

Demineralized Water Storage and Transfer System	KC
All Systems Requiring Flushing	

5.102.5 Major Equipment

Pumps
Heat Exchangers
Mixing Tanks
Piping-Valves and Instrumentation

5.103 Chilled Water System—KM

5.103.1 System Function. This system provides chilled water to the several buildings for the HVAC equipment.

5.103.2 System Description. The plant chilled water system circulates chilled water through a closed loop of piping to the various cooling coils in the HVAC equipment serving the various buildings. The water is chilled by water chilling refrigeration units that are part of the system.

5.103.3 Mode of Operation. This system is in use during normal plant operation.

5.103.4 Major Interfacing Systems

Demineralized Water Storage and Transfer System	KC
Containment Fan Cooling System (PWR)	BK
Non Essential Service Water System	KG
Engineered Safety Features Actuation System	JE
Drywell Environmental Control System	VB
Auxiliary Building Environmental Control System	VF
Control Building/Control Complex Environmental Control System	VI

5.103.5 Major Equipment

Refrigeration Unit
Pumps and Valves

Copyright The Institute of Electrical and Electronics Engineers, Inc.
Provided by IHS under license with IEEE
No reproduction or networking permitted without license from IHS
Not for Resale

5.104 Sampling and Water Quality System —KN

5.104.1 System Function. This sampling and water quality system provides sample analysis for the balance of plant water quality of all nonradioactive liquid systems.

5.104.2 System Description. The sampling and water quality system consists of sample lines connecting all nonradioactive liquid systems to a battery of sample coolers located in a sample panel provided with a drain tank and sink.

5.104.3 Mode of Operation. This system is in use during all plant operating modes.

5.104.4 Major Interfacing Systems

Feedwater System	SJ
Auxiliary/Emergency Feedwater System	BA
Condensate System	SD
Makeup Demineralizer System	KJ
Low-Pressure Heater Drains and Vents System	SM
High-Pressure and Moisture Separator Reheater Drains and Vents System	SN
Turbine Building Closed Cooling Water System	KB
Liquid Radwaste Management System	WD
Closed/Component Cooling Water System	CC

5.104.5 Main Components

Sampling Panel
Piping-Valves and Instrumentation

Copyright The Institute of Electrical and Electronics Engineers, Inc.
Provided by IHS under license with IEEE
No reproduction or networking permitted without license from IHS

Not for Resale

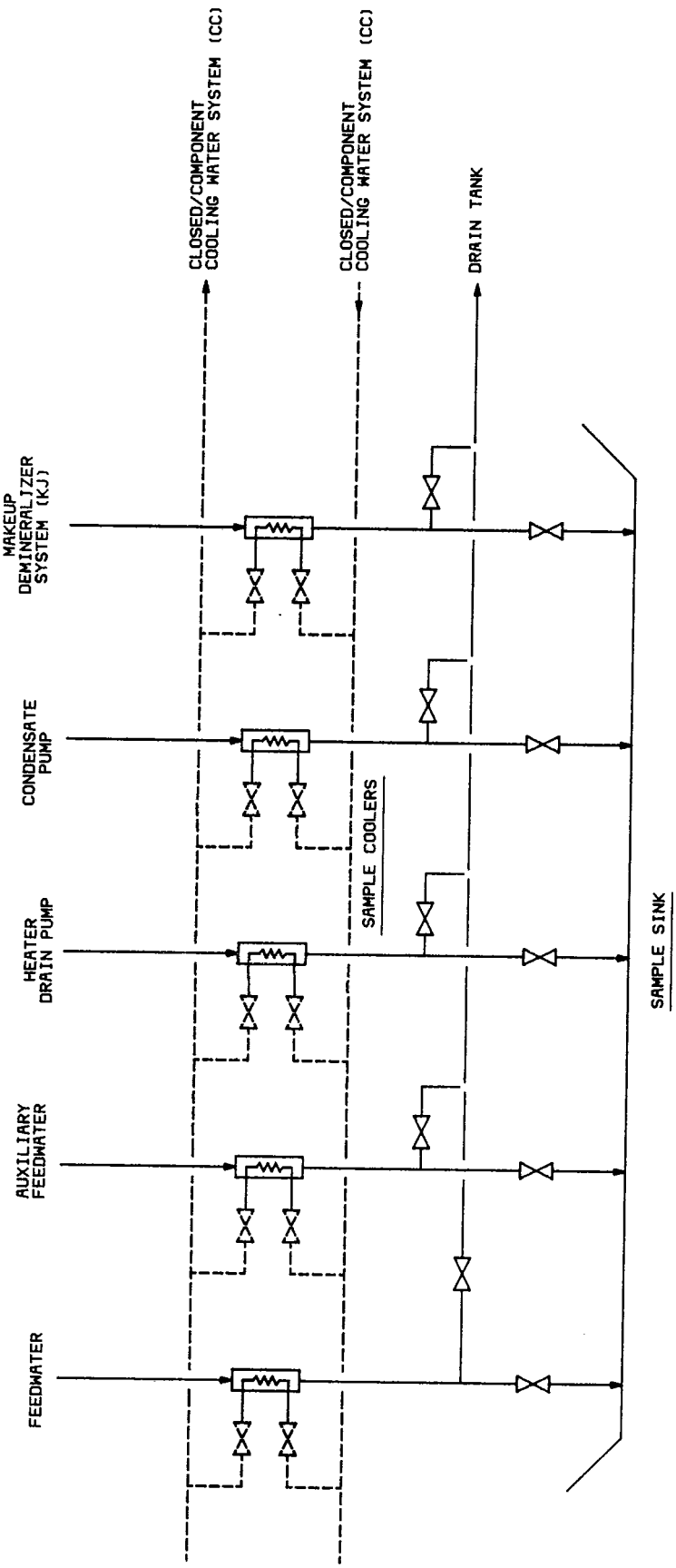

CC — Closed/Component Cooling Water System

Fig 51
Sampling and Water Quality System — KN

Copyright The Institute of Electrical and Electronics Engineers, Inc.
Provided by IHS under license with IEEE
No reproduction or networking permitted without license from IHS

Not for Resale

5.105 Gland Seal Water Supply System—KO

5.105.1 System Function. The gland seal water supply system provides sealing water to various equipment exposed to condenser vacuum under normal plant operation, that is, valves equipped with lantern rings, main condenser expansion joint seals, hotwell pump glands, and heater drain pump glands.

5.105.2 System Description. Water from the condensate system or makeup demineralizer system fills the gland seal storage tank. Water then flows by gravity through system piping to various components. Run-off from the vacuum breaker seal, gland steam condenser drains, and feedwater pump seals is collected in the atmospheric drain tank and then returned to the main condenser through a level control valve. Run-off of other components discharge to the building drainage.

5.105.3 Mode of Operation. This system is operating in normal conditions.

5.105.4 Major Interfacing Systems

Condenser System	SG
High-Pressure Heater and Moisture Separator Reheater Drains and Vents System	SN
Low-Pressure Heater Drains and Vents System	SM
Feedwater System	SJ
Condensate System	SD
Demineralized Water Storage and Transfer System	KC
Condenser Vacuum System	SH
Main/Reheat Steam System	SB
Steam Generator Blowdown System	WI
Condensate Storage and Transfer System	KA
Turbine Steam Seal System	TC

5.105.5 Major Equipment

Storage Tank
Atmospheric Drain Tank
Piping-Valves and Instrumentation

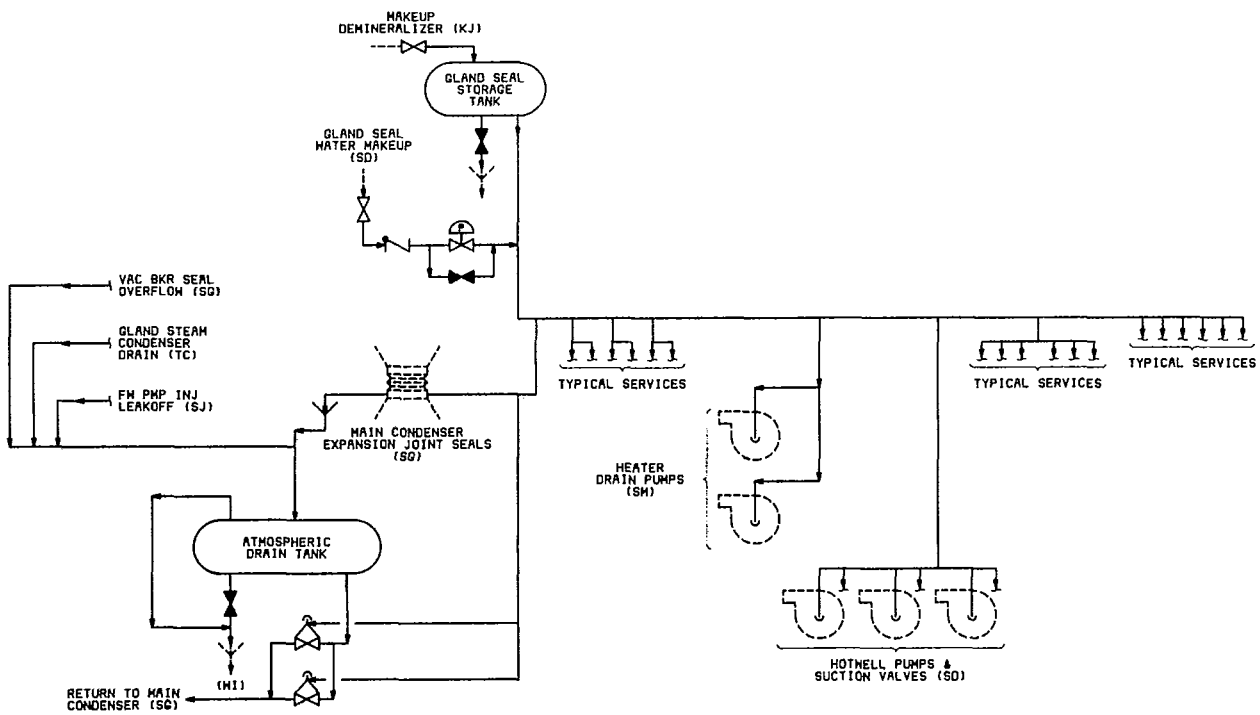

Fig 52
Gland Seal Water Supply System — KO

Copyright The Institute of Electrical and Electronics Engineers, Inc.
Provided by IHS under license with IEEE
No reproduction or networking permitted without license from IHS
Not for Resale

5.106 Fire Protection System (WATER)—KP

5.106.1 System Function. The fire protection system (water) pressurizes and delivers fire protection water to appropriate locations within the plant as required for the protection of personnel and equipment.

5.106.2 System Description. The fire protection system is pressurized by a redundant pumping system, that is, electric or diesel engine driven fire pumps, or both, and jockey pumps.

Fire protection water is dispensed in various modes, namely: dry pipe distribution, wet pipe distribution, transformers deluge, hose reels/racks stations, fire hydrants.

5.106.3 Mode of Operation. The system is used in normal and emergency operating conditions.

5.106.4 Major Interfacing Systems

Essential Service Water System	BI
Heat Rejection System	KE
Heat Rejection Chemical Treatment System	KF
Fuel Oil Receiving, Storage and Transfer System	DE
Low-Voltage Power System	EC

5.106.5 Major Equipment

Fire Pump Drivers-Diesel Engine/Electric Motor
Fire Pumps
Jockey Pumps
Strainers
Sprinklers/Deluge
Hose Reels/Racks
Fire Hydrants

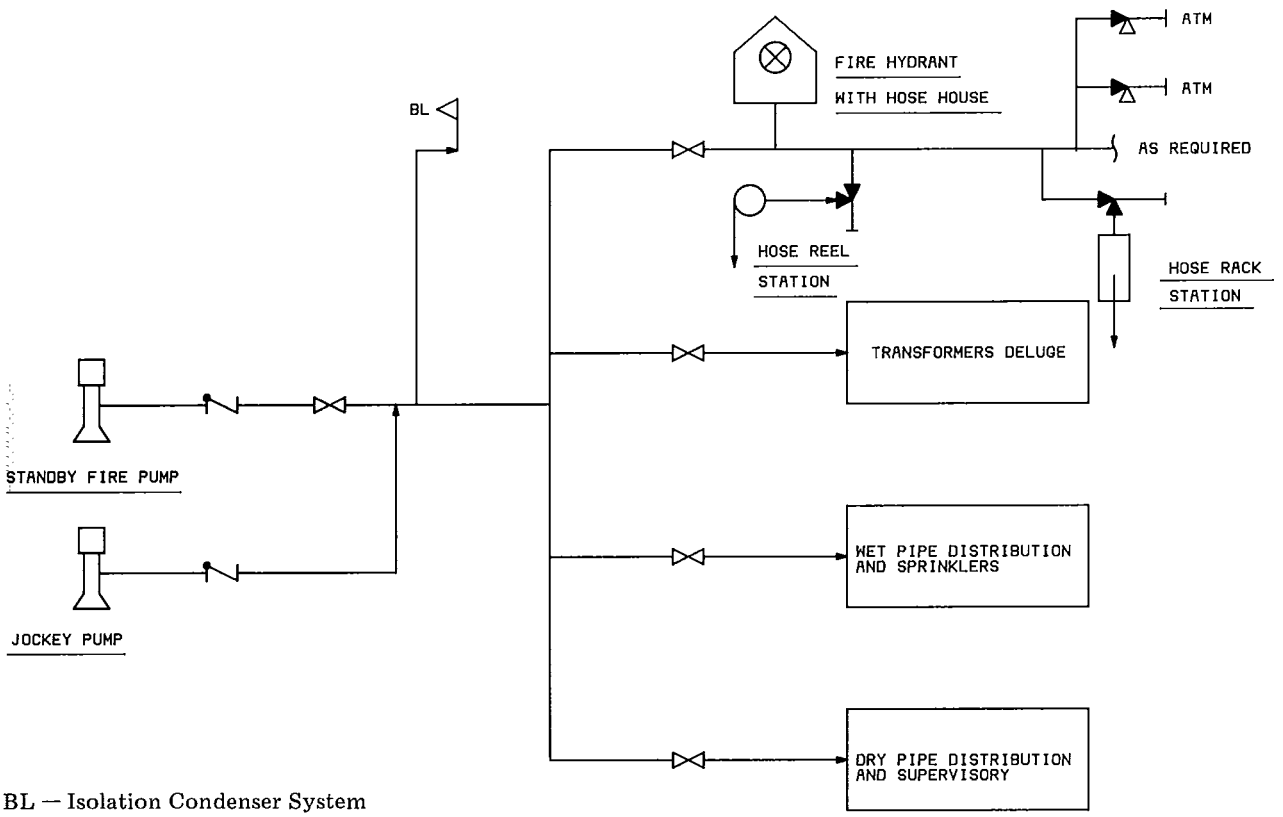

BL — Isolation Condenser System

Fig 53
Fire Protection System (Water) — KF

Copyright The Institute of Electrical and Electronics Engineers, Inc.
Provided by IHS under license with IEEE
No reproduction or networking permitted without license from IHS

Not for Resale

5.107 Fire Protection System (Chemical) —KQ

5.107.1 System Function. The fire protection system (chemical) provides for a means of fire fighting with chemical agents such as carbon dioxide, halon, foam, etc in those areas of the plant where such methods have been deemed appropriate.

5.107.2 System Description. A typical system will contain chemical storage tank or cylinders, or both, refrigeration units, piping, valves, and instrumentation. The system could be actuated manually or automatically upon the occurrence of a fire. Upon actuation, the system would release the appropriate chemical agent in the area of concern and serve to extinguish a fire.

5.107.3 Mode of Operation. The system will operate upon the occurrence of a fire during any mode of plant operation.

5.107.4 Major Interfacing Systems

Carbon Dioxide (CO_2) Supply System	LW
Low-Voltage Power System	EC

5.107.5 Major Equipment. See system description.

Table 12

	Service Auxiliaries Systems Group	Plant Type		Revision
LA	Diesel Lube Oil System	B	P	
LB	Diesel Cooling Water System	B	P	
LC	Diesel Generator Starting Air System	B	P	
LD	Instrument Air Supply System	B	P	
LE	Essential Air System	B	P	
LF	Service Air System	B	P	
LG	Welding Gas System	B	P	
LH	Breathing Air System	B	P	
LJ	Hydrogen Supply System	B	P	
LK	Nitrogen Supply System	B	P	
LL	Lube Oil System	B	P	
LM	Lube Oil Storage and Transfer System	B	P	
LN	Insulating Oil System	B	P	
LP	Laboratory Gas System	B	P	
LQ	Laboratory Equipment System	B	P	
LR	Material and Equipment Handling System	B	P	
LS	Plant Shop System	B	P	
LT	Record Storage System	B	P	
LU	Yard Handling and Maintenance System	B	P	
LV	Plant Hot Water System	B	P	
LW	Carbon Dioxide (CO_2) Supply System	B	P	

B—BWR P—PWR

5.108 Diesel Lube Oil System—LA

5.108.1 System Function. The diesel lube oil system provides lubrication for the prime mover of the emergency onsite power supply system when the prime mover is not in operation.

5.108.2 System Description. The system primarily consists of electric pumps, filters, electric heaters, heat exchangers, piping, valves, and instrumentation and controls. Essentially, the system pumps lube oil through the prime mover with several electric pumps, filtered with cartridge filters, and maintained at the proper temperature with electric heaters and heat exchangers.

5.108.3 Mode of Operation. The system functions during all modes of plant operation.

5.108.4 Major Interfacing Systems

Emergency Onsite Power Supply System	EK
Low-Voltage Power System—Class 1E	ED
Lube Oil System	LL

5.108.5 Major Equipment. See system description.

5.109 Diesel Cooling Water System—LB

5.109.1 System Function. The diesel cooling water system provides cooling service for the

Copyright The Institute of Electrical and Electronics Engineers, Inc.
Provided by IHS under license with IEEE
No reproduction or networking permitted without license from IHS

Not for Resale

prime mover of the emergency onsite power supply system.

5.109.2 System Description. The system is typically a closed cooling loop with such items as coolers, heat exchangers, electric heaters, and pumps, and the associated instrumentation and controls which circulate water through the water jackets of the prime mover to prevent overheating.

5.109.3 Mode of Operation. The system operates as required during emergency and normal plant operational modes.

5.109.4 Major Interfacing Systems

Emergency Onsite Power Supply System	EK
Essential Service Water System	BI

5.109.5 Major Equipment. See system description.

5.110 Diesel Generator Starting Air System —LC

5.110.1 System Function. The diesel generator starting air system pressurizes, stores, and delivers compressed air required to start the emergency/standby diesel generator.

5.110.2 System Description. The diesel generator starting air system is supplied by two separate sources of compressed air, each having a different type of prime mover.

The normal source of compressed air is supplied by an air compressor driven by its own diesel generator.

The alternate source of compressed air is supplied by an air compressor driven by an A/C motor.

Each starting air system is comprised of a prime mover, an air compressor, after coolers, dryers, piping, valves, and instrumentation.

5.110.3 Mode of Operation. The system is generally in use during emergency conditions and plant shutdown.

5.110.4 Major Interfacing Systems

Low-Voltage Power System	EC
Emergency Onsite Power Supply System	EK

5.110.5 Major Equipment

A/C Motor
Diesel Engine
Compressors
After Coolers
Air Receivers
Dryers

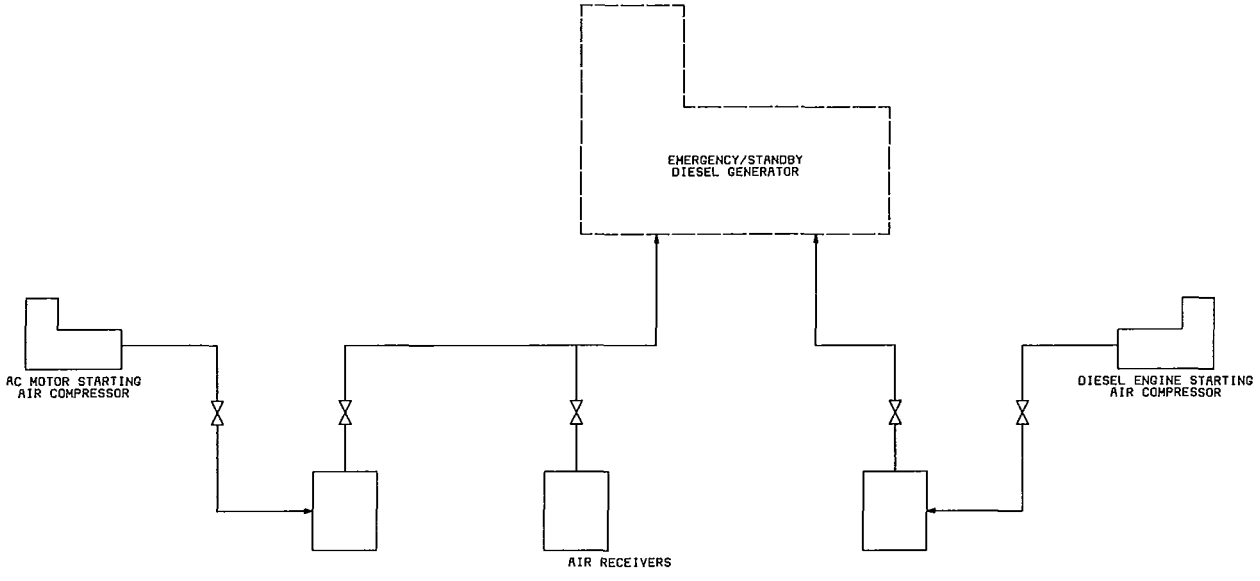

Fig 54
Diesel Generator Starting Air System — LC

Copyright The Institute of Electrical and Electronics Engineers, Inc.
Provided by IHS under license with IEEE
No reproduction or networking permitted without license from IHS
Not for Resale

5.111 Instrument Air Supply System—LD

5.111.1 System Function. The instrument air supply system provides dry filtered air for various instrument and control devices within the power plant during normal operations.

5.111.2 System Description. A typical system will consist of one, two, or more air compressor units with the pertinent accompanying components such as intake filter, aftercoolers, receiver tanks, dryer prefilters, air dryers, dryer afterfilters, piping, valves, and instrumentation and controls. These units compress air and supply it where required for plant control purposes. At many plants this system is tied to the essential air system supplying that systems requirement during normal operations.

5.111.3 Mode of Operation. The system operates during normal, startup, and shutdown modes of plant operation as required. The system does not normally operate during emergency conditions.

5.111.4 Major Interfacing Systems

Low-Voltage Power System	EC
Essential Air System	LE
Service Air System	LF
Closed/Component Cooling Water System	CC

5.111.5 Major Equipment. See system description.

5.112 Essential Air System—LE

5.112.1 System Function. The essential air system supplies compressed air to components requiring a source of dry, filtered, and oil-free air in the performance of safety-related and non-safety-related operations.

5.112.2 System Description. The system consists of two independent trains of equipment, each consisting of an air compresor unit, an air dryer unit, an air receiver vessel, a high-pressure air bottle storage bank, and the appropriate piping, valves, and instrumentation and control.

For normal plant operation, the air compressor units operate to provide the required compressed air which is then dried and routed to the air-receiver vessel. The air receiver then supplies compressed air as needed to the components serviced by the system. During an accident condition, the compressors are shut down and a safety air supply consisting of a bank of high-pressure air bottles supply air through a pressure-reducing valve to the air receiver. If additional air is required during an extended accident and the compressors are still not functioning, some of the air bottles can be replaced with freshly-charged bottles.

The basic system, as described above consisting of two trains of equipment, serves the needs of one reactor unit. Thus for a two unit plant, there are two separate and completely independent systems.

5.112.3 Mode of Operation. The system is in use during normal and emergency operation.

5.112.4 Major Interfacing Systems

Residual Heat Removal/Low-Pressure Coolant Injection System (BWR)	BO
Residual Heat Removal/Low-Pressure Safety Injection System (PWR)	BP
Main/Reheat Steam System	SB
Emergency/Standby Gas Treatment System	BH
Containment Vacuum Relief System	BF
Instrument Air Supply System	LD

5.112.5 Major Equipment. See system description

5.113 Service Air System—LF

5.113.1 System Function. The service air system compresses, stores and delivers a continuous flow of compressed air to required plant consumers. Special treatment of the air is provided to meet specific needs such as purification and drying for instrument and safety-related equipment.

5.113.2 System Description. The compressed air system consists of filter-silencers feeding a train of compressors who supply compressed air through after coolers to air receivers. From the air receivers the compressed air is passed through instrument air dryers and filters prior to tying into the compressed air distribution system feeding control building, turbine building, auxiliary building, containment, and various services.

5.113.3 Mode of Operation. The system is in use during normal plant operations, plant shutdown, pre-operational testing, and start-up.

5.113.4 Major Interfacing Systems

Breathing Air System	LH
Instrument Air Supply System	LD
Solid Waste Management System	WB
Liquid Waste Management System	WD

Copyright The Institute of Electrical and Electronics Engineers, Inc.
Provided by IHS under license with IEEE
No reproduction or networking permitted without license from IHS Not for Resale

5.113.5 Major Equipment

Filter-Silencer
Air Compressor
After Cooler
Air Receiver
Instrument Air Dryer
Filter

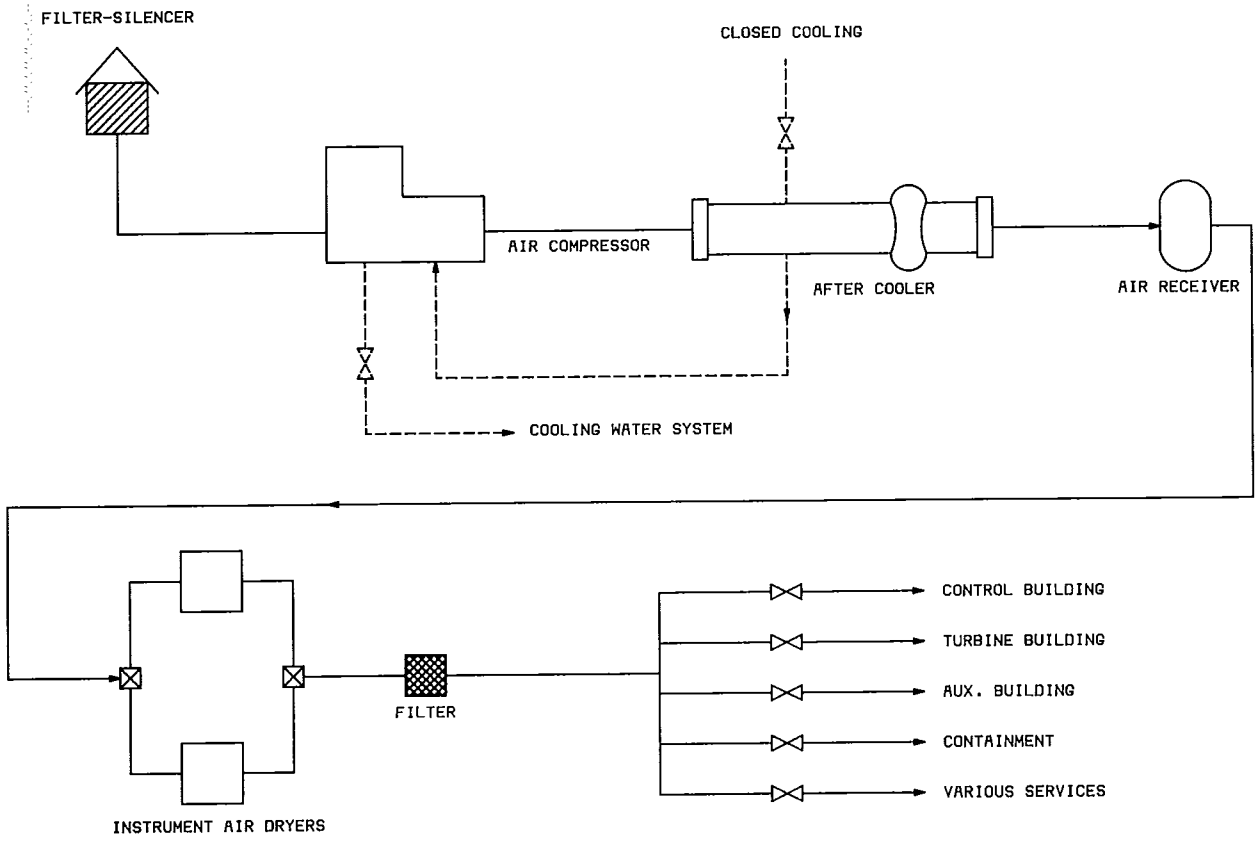

Fig 55
Service Air System — LF

Copyright The Institute of Electrical and Electronics Engineers, Inc.
Provided by IHS under license with IEEE
No reproduction or networking permitted without license from IHS

Not for Resale

5.114 Welding Gas System—LG

5.114.1 System Function. The system serves to store and deliver welding gas within the plant.

5.114.2 System Description. The welding gas system provides oxygen and acetylene gas for welding required in the plant. A cylinder rack supplies the gas to various points within the plant. Replacement gas cylinders are stored in an oxygen acetylene and oil storage area. The system primarily consists of gas cylinders, a supply manifold, piping, valves, and all necessary controls and instrumentation.

5.114.3 Mode of Operation. The system is in use during normal plant operation.

5.114.4 Main Interfacing Systems. None.

5.114.5 Major Equipment

Piping, Valves
Regulators
Cylinders

5.115 Breathing Air System—LH

5.115.1 System Function. The system serves to store and make available breathing air.

5.115.2 System Description. The breathing air system consists of the equipment needed to fill backpack type air tanks for use by personnel entering a contaminated area. The system consists of a low-pressure subsystem and a high-pressure subsystem. The low-pressure subsystem consists mainly of a tap from the service air system and storage racks for the air cylinders. The high-pressure subsystem basically consists of an air bottle charging station, carbon monoxide monitor, accumulators, an air compressor, and a purification unit.

5.115.3 Mode of Operation. The system is in use during normal plant operation.

5.115.4 Major Interfacing Systems

Service Air System	LF

5.115.5 Major Equipment

Piping, Valves
Charging Station
Air Cylinders

5.116 Hydrogen Supply System—LJ

5.116.1 System Function. The hydrogen supply system stores and distributes hydrogen to various plant systems for the use of cooling, instrument calibration, and oxygen scavenging.

5.116.2 System Description. Hydrogen transport trailers interface with the system at a valve cabinet. Hydrogen supply pressure is regulated by a pressure-reducing valve. The hydrogen is passed through a secondary control station which further reduces the hydrogen pressure before it is distributed.

5.116.3 Mode of Operation. The system is operating in normal and emergency conditions.

5.116.4 Major Interfacing Systems

Chemical and Volume Control/Makeup and Purification System (PWR)	CB
Main Generator Hydrogen Cooling System	TK

5.116.5 Major Equipment

Gas Cylinders
Piping
Valves
Instrumentation and Controls

5.117 Nitrogen Supply System—LK

5.117.1 System Function. The nitrogen supply system stores high-pressure nitrogen and distributes it to a high- and low-pressure header for use by various plant systems.

5.117.2 System Description. The nitrogen supply system consists of:

(1) Two banks of nitrogen cylinders

(2) Two low-pressure regulating valve stations (one per bank)

(3) One high-pressure valve station, valves, and instrumentation.

5.117.3 Mode of Operation. The system is in use during normal and emergency conditions.

5.117.4 Major Interfacing Systems

Auxiliary/Emergency Feedwater System	BA
Condenser Vacuum System	SH
Residual Heat Removal/Low-Pressure Coolant Injection System (BWR)	BO
Residual Heat Removal/Low-Pressure Safety Injection System (PWR)	BP
Reactor Services System	CF
Nuclear Fuel Services System	DB
Containment Spray System	BE
Chemical and Volume Control/Makeup and Purification System (PWR)	CB
Main/Reheat Steam System (PWR)	SB
Steam Generator Blowdown System (PWR)	WI
Gaseous Radwaste Management System	WE

Copyright The Institute of Electrical and Electronics Engineers, Inc.
Provided by IHS under license with IEEE
No reproduction or networking permitted without license from IHS
Not for Resale

Liquid Radwaste Management System	WD
Plant Hot Water System	LV
Radwaste Building Environmental Control System	VH
Radwaste Building	NE

5.117.5 Major Equipment

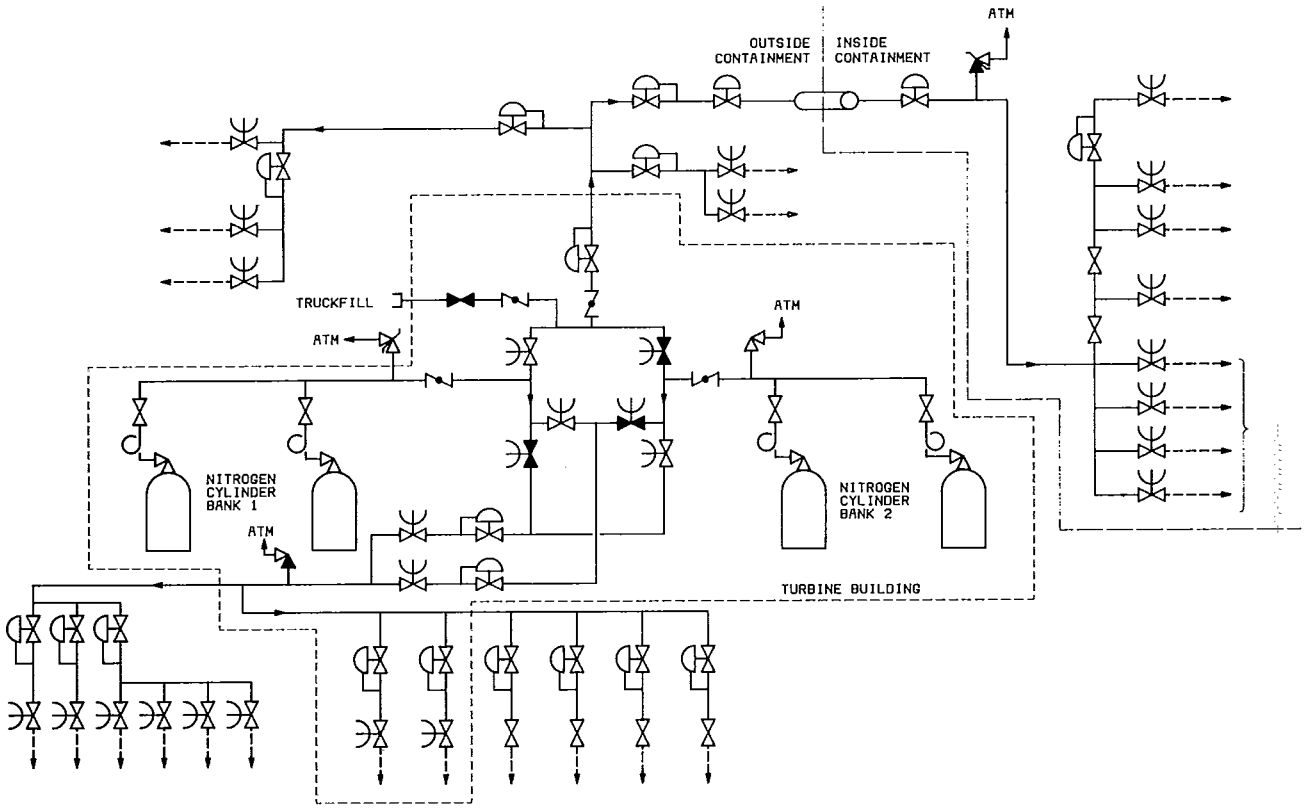

Fig 56
Nitrogen Supply System — LK

Copyright The Institute of Electrical and Electronics Engineers, Inc.
Provided by IHS under license with IEEE
No reproduction or networking permitted without license from IHS

Not for Resale

5.118 Lube Oil System—LL

5.118.1 System Function. The lube oil system receives lube oil from the lube oil storage and transfer system and delivers it as needed to the turbine lube oil system, feedwater pump turbine lube oil system, diesel lube oil system, and other applications as needed.

5.118.2 System Description. The system consists principally of valves and piping, although some plants may also employ an additional transfer pump. Some designers consider this a subsystem of the Lube Oil Storage and Transfer System.

5.118.3 Mode of Operation. The system operates during normal plant operation and during startup and shutdown modes as required.

5.118.4 Major Interfacing Systems

Low-Voltage Power System	EC
Lube Oil Storage and Transfer System	LM
Turbine Lube Oil System	TD
Feedwater Pump Turbine Lube Oil System	SL
Diesel Lube Oil System	LA

5.118.5 Major Equipment

Valves
Piping

5.119 Lube Oil Storage and Transfer System —LM

5.119.1 System Function. The lube oil storage and transfer system stores, cleans, and provides lubricating oil to the main turbo generator lube oil reservoir and to the feedwater pump turbine lube oil system.

5.119.2 System Description. The storage tanks are located in the yard in a diked area. Virgin lubricating oil is received at the fill and reject station. The oil received is pumped into either the virgin or clean lubricating oil tanks by the lubricating oil transfer pump. Oil in the dirty lubricating oil tank can be loaded into tank cars or trucks at the fill and reject station by the transfer pump.

The normal system operation is for the transfer pump to deliver oil from the clean lubricant oil tank to the various lube oil systems. Dirty oil is drained and stored in the dirty lubricating oil tank. A portable purification unit is provided which cleans the oil in the system using the transfer pump to move the oil.

5.119.3 Mode of Operation. The system is in use during normal plant operation.

5.119.4 Major Interfacing Systems

Low-Voltage Power System	EC
Turbine Lube Oil System	TD
Feedwater Pump Turbine Lube Oil System	SL
Lube Oil System	LL

5.119.5 Major Equipment

Storage Tanks
Lubrication Oil Transfer Pump
Stationary Oil Purifier
Portable Oil Purifier

Copyright The Institute of Electrical and Electronics Engineers, Inc.
Provided by IHS under license with IEEE
No reproduction or networking permitted without license from IHS

Not for Resale

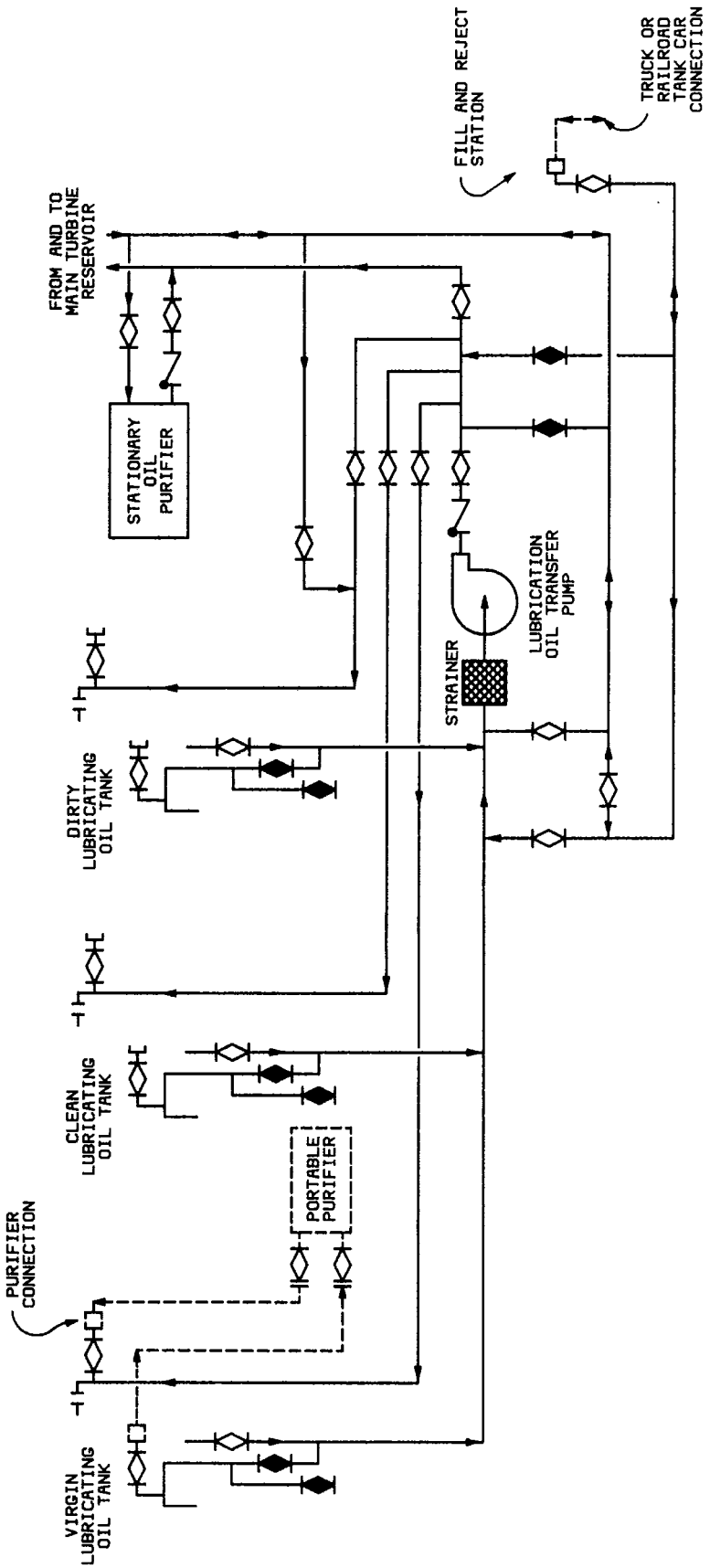

Fig 57
Lube Oil Storage and Transfer System — LM

Copyright The Institute of Electrical and Electronics Engineers, Inc.
Provided by IHS under license with IEEE
No reproduction or networking permitted without license from IHS

Not for Resale

5.120 Insulating Oil System—LN

5.120.1 System Function. The insulating oil system provides a supply of clean insulating oil to the main transformers, the station service transformers, the reserve station transformers, and the 161 kV oil circuit breakers. In addition, dirty insulating oil is removed from the above by this system.

5.120.2 System Description. The principal components of the system are two oil storage tanks, one for clean oil and one for dirty oil; transfer pumps, and the necessary piping and valves for transporting the oil.

The system receives a supply of clean oil at the fill and reject station. The transfer pump is used to remove the oil from the receiving station to the clean oil tank where it is kept in storage until it is required. The transfer pump can be utilized to supply insulating oil from the clean oil tank to the oil supply headers in the vicinity of the main transformers or the oil circuit breakers. Hoses then are connected from the supply header to the component requiring oil and from the component to a discharge header which returns used oil to the dirty oil tank.

A portable purification plant may be used to clean up the oil in the dirty oil tank and transfer it to the clean oil tank. In addition, a portable filter unit may be employed to filter out impurities in the insulating oil of any of the oil supplied components.

A single insulating oil system may serve components from all units and thus is common to all units of the plant.

5.120.3 Mode of Operation. This system operates during normal plant operation.

5.120.4 Major Interfacing Systems

Main Generator System	TB
Switchyard System	FK
Medium-Voltage Power System	EA

5.120.5 Major Equipment

Pumps
Filters
Oil Storage Tanks

Copyright The Institute of Electrical and Electronics Engineers, Inc.
Provided by IHS under license with IEEE
No reproduction or networking permitted without license from IHS

Not for Resale

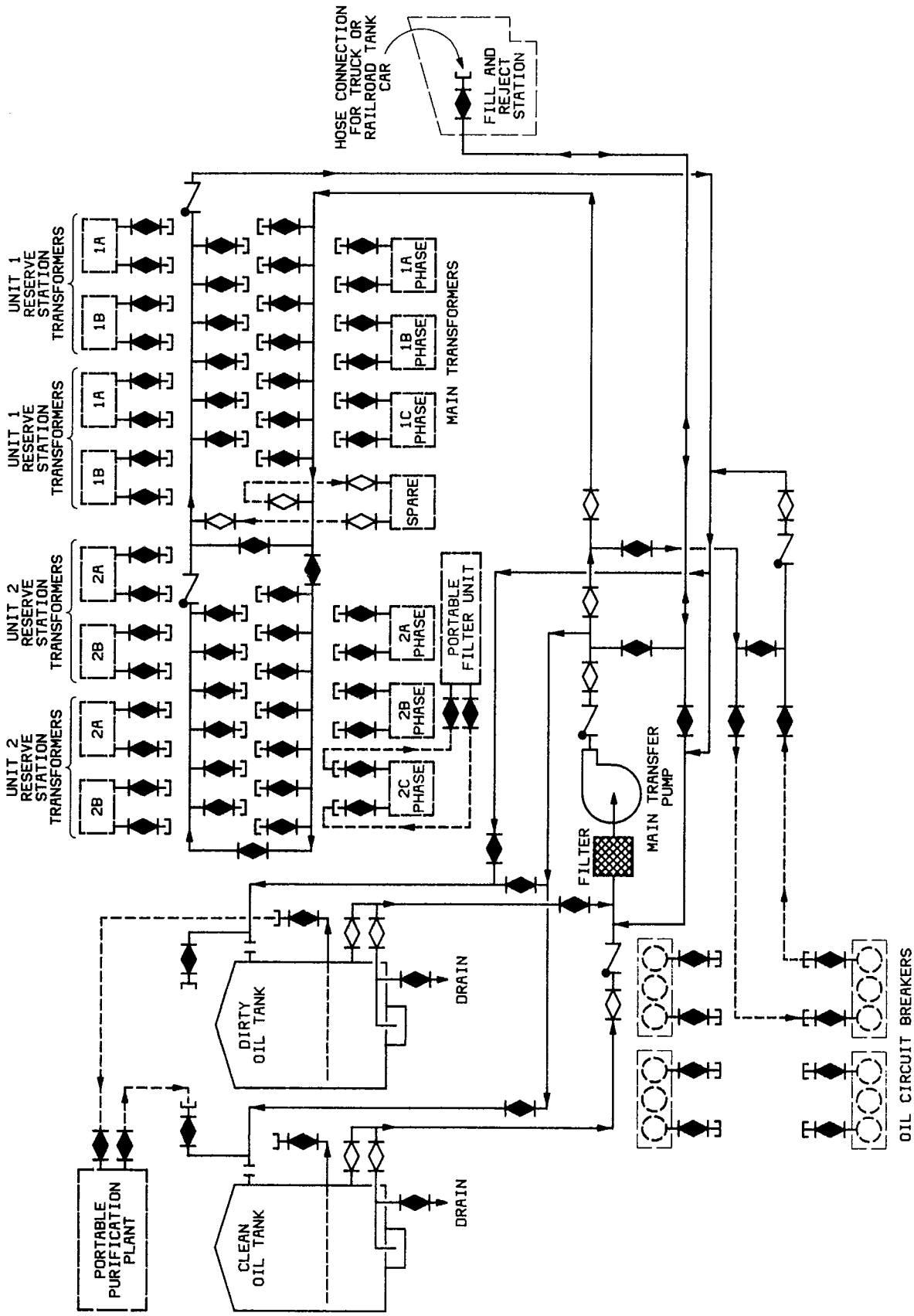

Fig 58
Insulating Oil System — LN

Copyright The Institute of Electrical and Electronics Engineers, Inc.
Provided by IHS under license with IEEE
No reproduction or networking permitted without license from IHS
Not for Resale

5.121 Laboratory Gas System—LP

5.121.1 System Function. The laboratory gas system provides several high purity gases to equipment in the radiological and chemical Lab.

5.121.2 System Description. This system provides high purity urethane, acetylene, helium, argon, and nitrous oxide gases to equipment in the radiological and chemical lab, such as Bunsen burners, electrospectrometers, etc. One system serves all units of the plant.

5.121.3 Mode of Operation. The system functions during normal plant operation.

5.121.4 Major Interfacing Systems

Laboratory Equipment System LQ

5.121.5 Major Equipment

Gas Cylinders
Piping
Valves
Instrumentation and Controls

5.122 Laboratory Equipment System—LQ

5.122.1 System Function. The laboratory equipment system provides various laboratory facilities and equipment to conduct lab analysis for the plant.

5.122.2 System Description. The system collectively contains the plant's various lab facilities and equipment for analysis in the areas of health, physics, radio, chemical, hot instruments, instrumentation, small tool decontamination, titration, and medical.

5.122.3 Mode of Operation. The system functions during normal plant operation, shutdown, accident and refueling operations.

5.122.4 Major Interfacing Systems. The system interfaces with various plant structural, electrical, and mechanical systems as determined by requirements of individual components.

Laboratory Gas System LP

5.122.5 Major Equipment. Typical for these facilities.

5.123 Material and Equipment Handling System—LR

5.123.1 System Function. The material and equipment handling system provides the vertical and horizontal mobility for the handling of miscellaneous plant machinery and equipment.

5.123.2 System Description. The material and equipment handling system consists of hoists, cranes, and tools required for: general maintenance work, erection and dismantling of plant equipment; receiving, loading, unloading and storing of workshops and stores items.

5.123.3 Mode of Operation. The system is in use during normal plant operation.

5.123.4 Major Interfacing System

Civil and Structural Systems
Appropriate Electric Power Distribution System

5.123.5 Major Equipment

Radwaste Crane
Polar Crane
Bridge Crane
Fuel Handling Crane
Remote Manipulators

5.124 Plant Shop System—LS

5.124.1 System Function. The plant shop system includes all machinery and equipment provided for the maintenance and repair of plant components.

5.124.2 System Description. The plant shop system typically includes the following shops: machine, boilermaker, steam fitter, sheet metal, electric, insulation, paint, and carpentry.

The majority of the various plant shops are located within the service building.

5.124.3 Mode of Operation. This system is in use during normal plant operation.

5.124.4 Major Interfacing System. The plant shop system interfaces with the plant's electric power distribution, the plant services such as: compressed air, water and drainage systems, and on an individual component basis with the civil/structural system.

5.124.5 Major Equipment

Lathes
Grinders
Drills
Planers
Milling Machines
Shears
Hacksaws
Press
Bending Machines
Ovens
Cleaning Machines
Paint Booths
Welding Sets

5.125 Record Storage System—LT

5.125.1 System Function. The record storage system preserves and protects quality assurance records at the plant from any possible damage, deterioration, or theft.

Copyright The Institute of Electrical and Electronics Engineers, Inc.
Provided by IHS under license with IEEE
No reproduction or networking permitted without license from IHS
Not for Resale

5.125.2 System Description. The system consists of a record storage vault provided with security and environmental equipment designed to protect the quality-assurance records.

5.125.3 Mode of Operation. This system is in use during normal plant operation.

5.125.4 Major Interfacing Systems

Fire Protection System (Water)	KP
Fire Protection System (Chemical)	KQ
Security System	IA
Communications System	FI
Computer System	ID

5.125.5 Major Components

Records Storage Vault
Alarms
Environmental

5.126 Yard Handling and Maintenance System—LU

5.126.1 System Function. All the mobile and miscellaneous equipment necessary to maintain the yard and the surrounding areas of the plant are grouped together under one coding system.

5.126.2 System Description. The yard handling and maintenance system consists primarily of yard cranes, tractor, and bush hog, a lawn mower, and other miscellaneous equipment.

5.126.3 Mode of Operation. This system is in use during normal plant operation.

5.126.4 Major Interfacing Systems. N/A

5.126.5 Major Components

200 Ton Capacity Crane
20 Ton Capacity Crane
Tractor
Lawn Mower

5.127 Plant Hot Water System—LV

5.127.1 System Function. The system provides heated water to the several buildings for HVAC equipment.

5.127.2 System Description. The plant hot water system circulates heated water through a closed loop of piping to the various heating coils in HVAC equipment serving the environmental control systems for the several buildings. The water is usually heated by the Auxiliary Steam System in a heat exchanger. Fill and makeup water is provided from the Demineralized Water Storage and Transfer System.

5.127.3 Mode of Operation. This system is in use during normal plant operation.

5.127.4 Major Interfacing Systems

Demineralized Water Storage and Transfer System	KC
Nitrogen Supply System	LK
Reactor Building Environmental Control System	VA
Auxiliary Building Environmental Control System	VT
Control Building/Control Complex Environmental Control System	VI
Turbine Building Environmental Control System	VK

5.127.5 Major Equipment

5.128 Carbon Dioxide (CO_2) Supply System —LW

5.128.1 System Function. The CO_2 supply system provides carbon dioxide gas for various plant applications such as "blanketing" of water storage tanks and purging of hydrogen gas from the main generator.

5.128.2 System Description. A typical system will primarily consist of such components as storage tanks, purging vaporizers, gas refrigeration unit, valves, piping, and instrumentation and controls arranged as necessary to supply carbon dioxide gas for the intended applications. An alternate system is the cylinder storage type.

Table 13

	Site Facility Buildings and Structures Group	Plant Type	Revision
MA	Administration Building	B P	
MB	Industrial/Sanitary Waste Treatment Building	B P	
MC	Maintenance and Warehouse Building	B P	
MD	Makeup Water Intake Structure	B P	
ME	Miscellaneous Buildings and Structures	B P	
MF	Service Building	B P	
MG	Wastewater Outfall Structure	B P	
MH	Water Treatment Building	B P	
MJ	Visitors Center	B P	
MK	Essential Service Water Pump Building	B P	

B—BWR P—PWR

Copyright The Institute of Electrical and Electronics Engineers, Inc.
Provided by IHS under license with IEEE
No reproduction or networking permitted without license from IHS

Not for Resale

5.128.3 Mode of Operation. The system functions as required during startup, shutdown, and normal plant operational modes.

5.128.4 Major Interfacing Systems

Low-Voltage Power System	EC
Main Generator Gas Purge System (if purged with carbon dioxide)	TH
Fire Protection System (Chemical)	KQ

5.128.5 Major Equipment. See system description.

5.129 Administrative Building—MA

5.129.1 System Function. Office for administrative personnel, engineers, operations personnel, and NRC if nuclear.

Library
Files and records
Conference rooms
First aid (optional location)
Kitchen and dining (optional)
Showers and lockers for engineers (optional location)
Computer equipment (optional)
Training rooms (optional location)
Meeting rooms
HVAC equipment

5.129.2 System Description. Size varies depending upon number of functions, size of plant, and number of personnel. According to function design may be connected to plant buildings. If this is a nuclear plant, it may be located outside of the fenced security area. It may have parking separate from plant and outage personnel.

Building may be steel frame, concrete or masonry, or both.

5.129.3 Mode of Operation. N/A

5.129.4 Major Interfacing Systems. N/A

5.129.5 Major Equipment. N/A

5.130 Industrial/Sanitary Waste Treatment Building—MB

5.130.1 System Function. To house waste treatment facilities that include pumps, settling ponds, filters and chemical treatment.

5.130.2 System Description. Building may be masonry or concrete.

5.130.3 Mode of Operation. N/A

5.130.4 Major Interfacing Systems. N/A

5.130.5 Major Equipment. N/A

5.131 Maintenance and Warehouse Building —MC

5.131.1 System Function. To house maintenance machine shop and work area and to provide storage for all maintenance and replacement equipment.

5.131.2 System Description. Size varies in accordance with the size of the plant. Truck access and proximity to plant are required features. It may be integrated with the service building or connected to plant buildings, or both. Building is made up of a steel frame.

5.131.3 Mode of Operation. N/A

5.131.4 Major Interfacing Systems. N/A

5.131.5 Major Equipment. N/A

5.132 Makeup Water Intake Structure—MD

1.132.1 System Function. To house screens, pumps, electrical and mechanical equipment for the makeup water intake.

1.132.2 System Description. The building is of reinforced concrete.

1.132.3 Mode of Operation. N/A

1.132.4 Major Interfacing Systems. N/A

1.132.5 Major Equipment. N/A

5.133 Service Building—MF

5.133.1 System Function. To house shower and locker facilities for plant and outage personnel. Warehouse and shop for maintenance as well as maintenance offices may be a part of this building.

5.133.2 System Description. Usually connected to the plant. Size varies in accordance with plant size and number of units.

5.133.3 Mode of Operation. N/A

5.133.4 Major Interfacing Systems. N/A

5.133.5 Major Equipment. N/A

5.134 Wastewater Outfall Structure—MG

5.134.1 System Function. To house pumps, filter room, electrical room for waste water treatment, and outfall pumping.

5.134.2 System Description. Pumproom is at lower level (usually subgrade) with filter room over. Building is of masonry or concrete.

5.134.3 Mode of Operation. N/A.

5.134.4 Major Interfacing System. N/A.

5.134.5 Major Equipment. N/A.

5.135 Water Treatment Building—MH

5.135.1 System Function. To house filters, pumps, pools, and chemical treatment facilities for intake water.

Copyright The Institute of Electrical and Electronics Engineers, Inc.
Provided by IHS under license with IEEE
No reproduction or networking permitted without license from IHS

 Not for Resale

5.135.2 System Description. Building may be masonry or concrete.

5.135.3 Mode of Operation. N/A.

5.135.4 Major Interfacing Systems. N/A.

5.135.5 Major Equipment. N/A

5.136 Visitors Center—MJ

5.136.1 System Function. The visitors center is a building provided to welcome members of the general public and house information displays about the plant.

5.136.2 System Description. The visitors center typically includes the foundation, walls, roof, and other structural features of the building.

5.136.3 Mode of Operation. N/A.

5.136.4 Major Interfacing Systems.

Visitors Center Environmental Control System	UH

5.136.5 Major Equipment. N/A.

5.137 Essential Service Water Pump Building—MK

5.137.1 System Function. The essential service water pump building encloses the essential service water pumps.

5.137.2 System Description. The essential service water pump building typically includes the foundation, walls, roof, and intake structure for the essential service water pump.

5.137.3 Mode of Operation. The building performs only passive structural functions which are independent of the mode of plant operation.

5.137.4 Major Interfacing Systems

Essential Service Water System (structural interfaces only)	BI

5.137.5 Major Equipment. None.

5.138 Control Building/Control Complex —NA

5.138.1 Function. The control building/control complex encloses the main control room and associated equipment.

5.138.2 Description. The control building is a structure which includes the foundation, walls, roof, and internal support structures and partitions. The building typically encloses and supports the following areas and equipment, depending on the design: main control room, cable spreading room(s), battery rooms, HVAC equipment room(s), inverter rooms, and shift operator support facilities.

For a facility without a separate control building, the control complex consists of the main support facilities, adjacent rooms which support control equipment and instrumentation, and the cable spreading area serving cable complex equipment.

5.138.3 Mode of Operation. The control building/control complex performs only passive structural functions which are independent of the mode of plant operation.

5.138.4 Major Interfacing Systems. The building interfaces structurally with systems within the building.

5.138.5 Major Equipment. None.

5.139 Emergency Onsite Power Supply Building—NB

5.139.1 Function. The emergency onsite power supply building supports and encloses the emergency generators and auxiliaries.

5.139.2 Description. The emergency onsite power supply building includes the foundation, walls, roof, and internal support structures and partitions. For a nuclear unit, the building is

Table 14

	Power Generation Buildings and Structures Group	Plant Type		Revision
NA	Control Building/Control Complex	B	P	
NB	Emergency Onsite Power Supply Building	B	P	
NC	Emergency Operations Facility (Offsite)	B	P	
ND	Fuel Building	B	P	
NE	Radwaste Building	B	P	
NF	Auxiliary Building	B	P	
NG	Reactor Building (BWR)	B	P	
NH	Reactor Containment Building	B	P	
NM	Turbine Building	B	P	
NN	Circulating Water Structures	B	P	

B—BWR P—PWR

Copyright The Institute of Electrical and Electronics Engineers, Inc.
Provided by IHS under license with IEEE
No reproduction or networking permitted without license from IHS
Not for Resale

typically divided into separate rooms for each emergency generator and its auxiliaries.

5.139.3 Mode of Operation. The emergency onsite power supply building performs only passive structural functions which are independent of the mode of plant operation.

5.139.4 Major Interfacing Systems. The building interfaces structurally with systems within the building.

5.139.5 Major Equipment. None.

5.140 Emergency Operations Facility (Offsite)—NC

5.140.1 Function. The emergency operations facility (offsite) encloses emergency monitoring, data, display, communications, and habitability equipment and facilities.

5.140.2 Description. The emergency operations facility (offsite) (EOF) includes the foundation, walls, roof, and internal partitions. The EOF is a separate facility located near the reactor site to provide evaluation of plant status and coordination with local, state, and federal emergency response organizations, in the event of an emergency having or potentially having an effect on public health and safety.

5.140.3 Mode of Operation. The EOF is only manned and activated in the event of a plant emergency.

5.140.4 Major Interfacing Systems. The EOF interfaces structurally with systems within the building.

5.140.5 Major Equipment. None.

5.141 Fuel Building—ND

5.141.1 Function. The fuel building encloses the new and spent fuel handling and storage facilities.

5.141.2 Description. The fuel building is a reinforced concrete structure which includes the foundation, walls, roof, spent fuel pool, and internal support structures and partitions. The building typically encloses the following areas or equipment, depending on the design: new fuel receiving area, new fuel inspection facilities, cask decontamination area, spent fuel cooling and cleanup equipment, HVAC equipment, and spent fuel handling and storage facilities.

5.141.3 Mode of Operation. The fuel building performs only passive structural functions which are independent of the mode of plant operation.

5.141.3 Major Interfacing Systems. The building interfaces structurally with systems within the building.

5.141.4 Major Equipment. None.

5.142 Radwaste Building—NE

5.142.1 Function. The radwaste building encloses radwaste processing equipment.

5.142.2 Description. The radwaste building is a reinforced concrete structure which includes the foundation, walls, roof; and internal support structures, partitions, and shielding. The building typically encloses the following facilities or equipment, depending on the design: liquid radwaste processing equipment, solid radwaste processing equipment, health physics facilities, radiochemistry facilities, hot instrument shop, hot laundry facilities, and solid radwaste storage areas.

5.142.3 Mode of Operation. The radwaste building performs only passive structural functions which are independent of the mode of plant operation.

5.142.4 Major Interfacing Systems

Nitrogen Supply System LK

The building interfaces structurally with systems within the building.

5.142.5 Major Equipment. None.

5.143 Auxiliary Building—NF

5.143.1 Function. The auxiliary building encloses emergency core cooling and other reactor auxiliary equipment.

5.143.2 Description. The auxiliary building is a reinforced concrete structure which includes the foundation, walls, roof, and internal support structures and partitions. On some designs, portions of the auxiliary building may also serve as a secondary containment barrier to reduce the release of radioactive fission products following a LOCA. The building typically houses equipment for the following systems, depending on the design: residual heat removal, reactor core isolation cooling (BWR), high-pressure coolant injection (BWR), high-pressure core spray (BWR), low-pressure core spray (BWR), auxiliary/emergency feedwater (PWR), containment spray, high-pressure safety injection (PWR), Boron recycle (PWR), chemical and volume control (PWR), closed/component cooling water, reactor water cleanup, and electric power systems switchgear and motor control centers. If the plant does not have a separate radwaste

Copyright The Institute of Electrical and Electronics Engineers, Inc.
Provided by IHS under license with IEEE
No reproduction or networking permitted without license from IHS
Not for Resale

building, the reactor auxiliary building also includes radwaste processing equipment.

5.143.3 Mode of Operation. The auxiliary building performs only passive structural functions which are independent of the mode of plant operation.

5.143.4 Major Interfacing Systems. The building interfaces structurally with systems within the building.

5.143.5 Major Equipment. None.

5.144 Reactor Building (BWR)—NG

5.144.1 Function. The reactor building encloses the reactor containment building, refueling and reactor servicing equipment, new and spent fuel storage facilities, and reactor auxiliary equipment.

5.144.2 Description. The reactor building is a reinforced concrete structure up to the refueling floor, with steel frame and metal siding construction above the refueling floor. The reactor building is supported by the reactor containment building foundation. The reactor building serves as a secondary containment barrier to reduce the release of radioactive fission products following a LOCA. The reactor building serves as a primary containment during periods when the reactor is shutdown and the primary containment boundary is open, such as during refueling. The reactor building houses reactor auxiliary equipment such as the reactor core isolation cooling system, standby liquid control system, control rod drive system components, reactor water cleanup system components, and emergency core cooling equipment.

5.144.3 Mode of Operation. The reactor building performs only passive structural functions which are independent of the mode of plant operation.

5.144.4 Major Interfacing Systems. The reactor building interfaces structurally with systems within the building.

5.144.5 Major Equipment. None.

5.145 Reactor Containment Buildin—NH

5.145.1 Function. The reactor containment building encloses and provides structural support for the reactor coolant system (PWR) or reactor recirculation system (BWR), and serves as a fission product leakage barrier to prevent the uncontrolled release of radioactivity to the environment in the event of a loss of coolant accident (LOCA).

5.145.2 Description. The reactor containment building consists of a containment vessel, foundation, shield building (steel containments only), drywell structure (BWR only), pressure suppressive pool (BWR Mark II and III only), torus (BWR Mark I only), internal support structures and shielding for reactor coolant system (PWR) and recirculation system (BWR) components, piping and electrical penetrations, and equipment and personnel access hatches.

The containment vessel may be a free standing steel vessel surrounded by a reinforced concrete shield building, or a reinforced or prestressed concrete vessel with a leaktight steel liner. The containment vessel is designed to withstand the peak pressure resulting from a LOCA and serves as a leaktight barrier to prevent the uncontrolled release of radioactive fission products. The shield building (steel containment) or a separate metal enclosure building (concrete containments) may also serve as a secondary containment barrier to further limit the release of radioactive fission products following a LOCA.

5.145.3 Mode of Operation. The reactor containment building performs passive structural functions which are independent of the mode of plant operation.

5.145.4 Major Interfacing Systems

The Reactor Containment Building interfaces structurally with systems within the containment.

Containment Ice Condenser System (PWR)	BC
Suppression Pool Makeup System (BWR)	BT
Suppression Pool Purification System (BWR)	CG
Post Accident Monitoring System	IP

5.145.5 Major Equipment

Electrical Penetration Assemblies
Piping Penetration Assemblies
Equipment Access Hatches
Personnel Access Hatches

5.146 Turbine Building—NM

5.146.1 Function. The turbine building encloses and supports the turbine generator (TG), TG auxiliaries, and steam cycle components.

5.146.2 Description. The turbine building includes the foundation, walls, roof, internal walls and partitions, and TG pedestal. The building typically encloses or supports the following major equipment: TG, condenser, feed-

Copyright The Institute of Electrical and Electronics Engineers, Inc.
Provided by IHS under license with IEEE
No reproduction or networking permitted without license from IHS
Not for Resale

water pumps, offgas system components (BWR), condensate demineralizer system equipment, switchgear, motor control centers, air compressors, turbine lube oil system equipment, water chillers, condensate pumps, and generator cooling and seal oil equipment.

5.146.3 Mode of Operation. The turbine building performs only passive structural functions which are independent of the mode of plant operation.

5.146.4 Major Interfacing Systems. The building interfaces structurally with systems within the building.

5.146.5 Major Equipment. None.

5.147 Circulating Water Structures—NN

5.147.1 Function. The circulating water structures encloses and supports heat rejection system components.

5.147.2 Description. For an open cycle heat rejection system (once through cooling on a lake, river, or ocean), the circulating water structures typically include a circulating water intake structure, pumphouse, discharge canal, and discharge structure. For a closed cycle heat rejection system (cooling towers), the circulating water structures typically include a circulating water pump structure, cooling tower foundation, and cooling tower basin.

5.147.3 Mode of Operation. The circulating water structures perform only passive structural functions which are independent of the mode of plant operation.

5.147.4 Major Interfacing Systems

Heat Rejection System (structural interfaces only). KE

5.147.5 Major Equipment. None.

Table 15

	Steam Cycle Systems Group	Plant Type		Revision
SA	Auxiliary Steam System	B	P	
SB	Main/Reheat Steam System	B	P	
SD	Condensate System	B	P	
SE	Extraction Steam System	B	P	
SF	Condensate Demineralizer System	B	P	
SG	Condenser System	B	P	
SH	Condenser Vacuum System	B	P	
SI	Condenser Tube Cleaning System	B	P	
SJ	Feedwater System	B	P	
SK	Feedwater Pump Injection and Miscellaneous System	B	P	
SL	Feedwater Pump Turbine Lube Oil System	B	P	
SM	LP Heater Drains and Vents System	B	P	
SN	HP Heater and MSR Drains and Vents System	B	P	

B—BWR P—PWR

5.148 Auxiliary Steam System—SA

5.148.1 System Function. The auxiliary steam system serves to generate and deliver steam to fulfill the requirements of power plant equipment during periods of plant shutdown, preoperational test, startup, and normal plant operation.

5.148.2 System Description. An auxiliary boiler of one of three primary types (electric, gas fired, or oil fired) supplies steam to operational piping for the following equipment or purposes:

Feedwater Pump Turbines (for testing/startup)
Turbine Gland Sealing (for startup)
Main Steam System Warmup (for startup)
Building Heating
Reactor Core Isolation Cooling Turbine (for testing only) (BWR plants)
Liquid Radwaste Evaporators
Other Plant Auxiliary Functions (for startup)

5.148.3 Mode of Operation. The system operates during plant shutdown, testing, and startup modes of plant operation. In some plants the system also operates during normal plant operation for building heating purposes.

5.148.4 Major Interfacing Systems

Main/Reheat Steam System SB
Feedwater System SJ

Copyright The Institute of Electrical and Electronics Engineers, Inc.
Provided by IHS under license with IEEE
No reproduction or networking permitted without license from IHS Not for Resale

Demineralized Water Storage and Transfer System	KC	Turbine Steam Seal System	TC
Turbine Building Environmental Control System	VK	Liquid Waste Management System	WD
Reactor Core Isolation Cooling System (BWR plants)	BN	**5.148.5 Major Equipment**	
Fuel Oil Receiving, Storage and Transfer System	DE	Auxiliary Boiler	
		Auxiliary Boiler Feed Pumps	
		Chemical Addition Tank	
		Condensate Receiver	
		Deaerator	

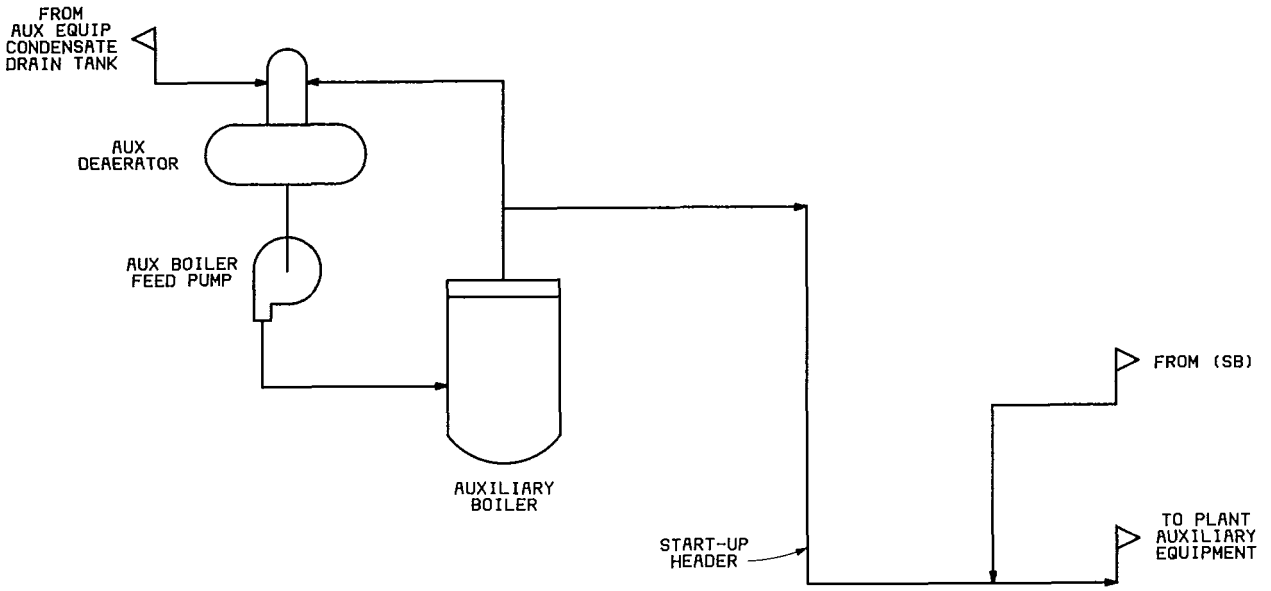

SB — Main/Reheat Steam System

Fig 59
Auxiliary Steam System — SA

Copyright The Institute of Electrical and Electronics Engineers, Inc.
Provided by IHS under license with IEEE
No reproduction or networking permitted without license from IHS

Not for Resale

5.149 Main/Reheat Steam System—SB

5.149.1 System Function. The main and reheat steam system serves to deliver steam from the steam generators (or reactor for BWR plants) to the main turbine and other services as appropriate.

5.149.2 System Description

5.149.2.1 PWR Plants. The main steam portion of the system delivers steam from the steam generators to high pressure turbine main stop valves and to the reheaters of the moisture-separator reheaters as a heat source. The reheat portion of the system delivers steam from the high pressure turbine exhaust to the moisture separator reheaters and from there to the low pressure turbine inlets. The system may also bypass the main turbine by routing steam directly to the main condenser. In addition, the system supplies steam to the turbine steam seal system and the auxiliary steam system. Some of the hot reheat steam is supplied to feedwater pump turbines and to steam jet air ejectors (if used for main condenser air removal).

5.149.2.2 BWR Plants. Boiling water reactor plants receive steam at the steam outlet connections on the reactor vessel, which is part of the reactor recirculation system. The main steam piping from the reactor vessel delivers steam to the high pressure turbine main stop valves and to the reheaters as a heat source. The reheat portion of the system delivers steam from the high-pressure turbine exhaust to the moisture separator reheaters and from there to the low-pressure turbine inlets. The system may also bypass the main turbine by routing steam directly to the main condenser. In addition, the system supplies steam to the turbine steam seal system. Some of the hot reheat steam is supplied to feedwater pump turbines, to preheaters in the Off Gas System, and to steam jet air ejectors (if used for main condenser air removal).

5.149.3 Mode of Operation. The system operates during normal and emergency conditions. The system does not operate during LOCA.

5.149.4 Major Interfacing Systems

Reactor Coolant System (PWR)	AB
Condenser System	SG
Feedwater System	SJ
Steam Extraction System	SE
Main Turbine System	TA
Reactor Recirculation System (BWR)	AD
HP Heater and MSR Drains and Vents System	SN
Offgas System (BWR)	WF
Auxiliary/Emergency Feedwater System (PWR)	BA
High Pressure Coolant Injection System (BWR)	BJ
Reactor Core Isolation Cooling System (BWR)	BN
Main Turbine Instrumentation System	IT
Turbine Steam Bypass Control System	JI
Feedwater Pump Turbine Instrumentation and Control System	JK
Gland Seal Water Supply System	KO
Essential Air System	LE
Nitrogen Supply System	LK
Auxiliary Steam System	SA
Condenser Vacuum System	SH
Turbine Steam Seal System	TC

5.149.5 Major Components

Moisture Separator Reheaters
Piping
Main Steam Isolation Valves (PWR)
Instrumentation and Control

Copyright The Institute of Electrical and Electronics Engineers, Inc.
Provided by IHS under license with IEEE
No reproduction or networking permitted without license from IHS

Not for Resale

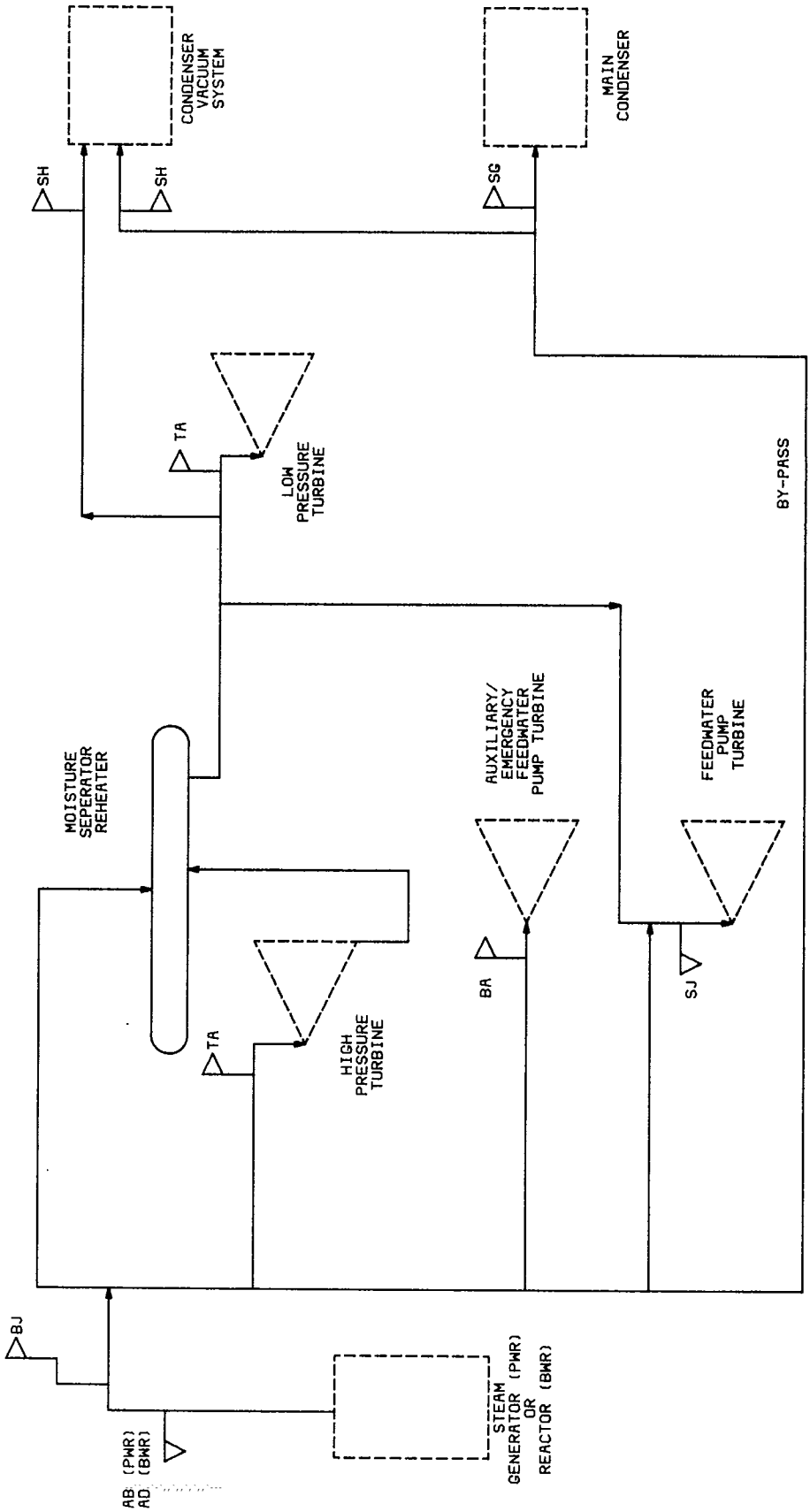

AB — Reactor Coolant System (PWR)
AD — Reactor Recirculation System (BWR)
BA — Auxiliary/Emergency Feedwater System (PWR)
SJ — Feedwater System
BJ — High Pressure Coolant Injection System (BWR)
SH — Condenser Vacuum System
SG — Main Condenser
TA — Main Turbine System

Fig 60
Main/Reheat Steam System — SB

Copyright The Institute of Electrical and Electronics Engineers, Inc.
Provided by IHS under license with IEEE
No reproduction or networking permitted without license from IHS

Not for Resale

5.150 Condensate System—SD

5.150.1 System Function. The condensate system is designed to deliver condensate from the main condenser hotwell to the suction of the main feedwater pumps (feedwater system) maintaining the required flow, pressure, and temperature conditions. The system also provides cooling water to the air ejector intercondenser, gland steam condenser, and off gas condenser (BWR plants only).

5.150.2 System Description. The system primarily consists of the condensate pumps, the booster pumps, and associated piping, valves, instrumentation, and control. The condensate pumps take condensate from the main condenser hotwell and pump it, partially or fully, through a demineralizer system. A branch line from the discharge of the hotwell pumps feeds the gland steam condenser, air ejector intercondenser, and off gas condenser (BWR plant only). The return line from the condensate demineralizer system feeds the suction header of the condensate booster pumps. The booster pumps drive the condensate through various stages of low pressure feedwater heaters to the suction of the feedwater pumps (feedwater system).

5.150.3 Mode of Operation. The system operates during normal and emergency conditions. It does not operate during a LOCA.

5.150.4 Major Interfacing Systems

Condenser System	SG
Feedwater System	SJ
Condensate Demineralizer System	SF
Turbine Building Closed Cooling Water System	KB
Feedwater/Steam Generator Water Level Control System	JB
Condensate Storage and Transfer System	KA
Makeup Demineralizer System	KJ
Offgas System (BWR)	WF
Gland Seal Water Supply System	KO
Feedwater Pump Injection and Miscellaneous System	SK
Condenser Vacuum System	SH
Steam Extraction System	SE
Low Pressure Heater Drains and Vents System	SM
High Pressure Heater and Moisture Separator Reheater Drains and Vents System	SN
Steam Generator Blowdown System (PWR)	WI
Turbine Steam Seal System	TC
Sampling and Water Quality System	KN

5.150.5 Major Equipment

Condensate Pumps
Condensate Booster Pumps
Low Pressure Feedwater Heaters
Gland Steam Condenser
Air Ejector Intercondenser

Copyright The Institute of Electrical and Electronics Engineers, Inc.
Provided by IHS under license with IEEE
No reproduction or networking permitted without license from IHS

Not for Resale

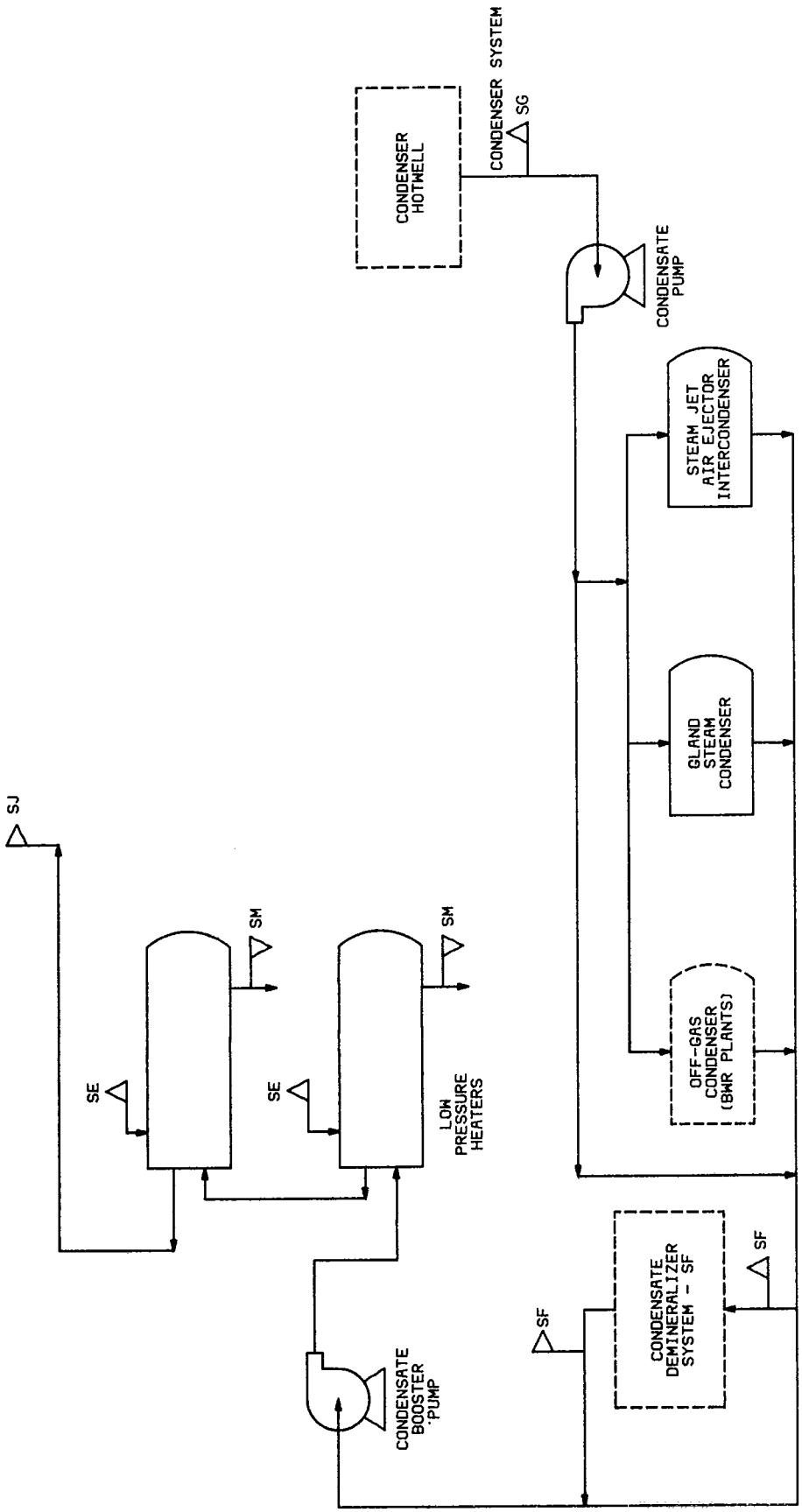

SJ — Feedwater System
SE — Steam Extraction System
SG — Condenser System
SM — Low Pressure Heater Drains and Vents System
SF — Condensate Demineralizer System

Fig 61
Condensate System — SD

Copyright The Institute of Electrical and Electronics Engineers, Inc.
Provided by IHS under license with IEEE
No reproduction or networking permitted without license from IHS

Not for Resale

5.151 Steam Extraction System—SE

5.151.1 System Function. The steam extraction system routes steam from the extraction points of the main turbine to provide heating steam to the high and low pressure feedwater heaters and to the moisture separator reheaters.

5.151.2 System Description. The system primarily consists of piping, valves, instrumentation and control necessary for routing the steam from extraction connections on the high and low pressure sections of the main turbine to connections on the high and low pressure feedwater heaters. Steam from the high pressure turbine is supplied to the moisture separator reheaters.

5.151.3 Mode of Operation. The system operates during normal and emergency conditions. It does not operate during a LOCA.

5.151.4 Major Interfacing Systems

Condensate System	SD
Main Turbine System	TA
Feedwater System	SJ
Main/Reheat Steam System	SB
Low Pressure Heater Drains and Vents System	SM
High Pressure Heater and Moisture Separator Reheater Drains and Vents System	SN
Turbine Drains and Miscellaneous Piping System	TF

5.151.5 Major Equipment

Piping
Valves
Instrumentation and Controls

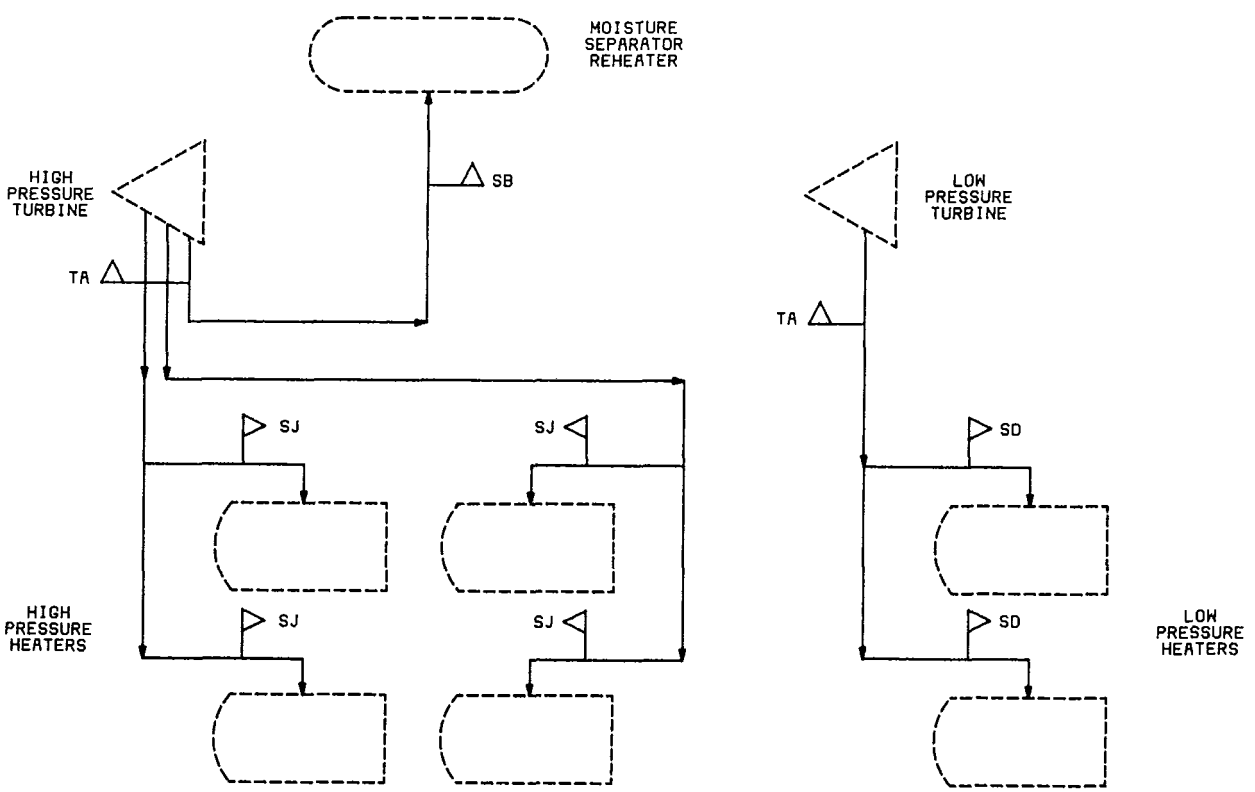

TA — Main Turbine System
SJ — Feedwater System
SD — Condensate System
SB — Main and Reheat Steam System

Fig 62
Steam Extraction System — SE

Copyright The Institute of Electrical and Electronics Engineers, Inc.
Provided by IHS under license with IEEE
No reproduction or networking permitted without license from IHS
Not for Resale

5.152 Condensate Demineralizer System —SF

5.152.1 System Function. The Condensate Demineralizer System is designed to remove impurities from the condensate in order to maintain the required water quality and minimize corrosion.

5.152.2 System Description. The system primarily consists of several service vessels containing a mixed bed of ion exchange resin, an external resin regeneration unit and radioactive waste handling equipment (BWR plants only). During normal plant operation the condensate demineralizer system receives full flow from the condensate system. The flow is then partially or fully passed through the demineralizer depending on the feedwater quality. The condensate that flows through the demineralizer has any dissolved impurities removed by the cation and anion resins and any suspended particles filtered out. Downstream of the demineralizer the demineralized condensate is routed to the condensate system.

When the resin loses its ion exchange capability, the spent resin is transferred to the resin regeneration unit.

5.152.3 Mode of Operation. The system operates during normal and emergency conditions. It does not operate during a LOCA.

5.152.4 Major Interfacing Systems

Condensate System	SD
Solid Waste Management System	WB
Liquid Radwaste Management System	WD

5.152.5 Major Equipment

Pumps
Tanks
Filter Demineralizer
Mixed-Bed Demineralizer

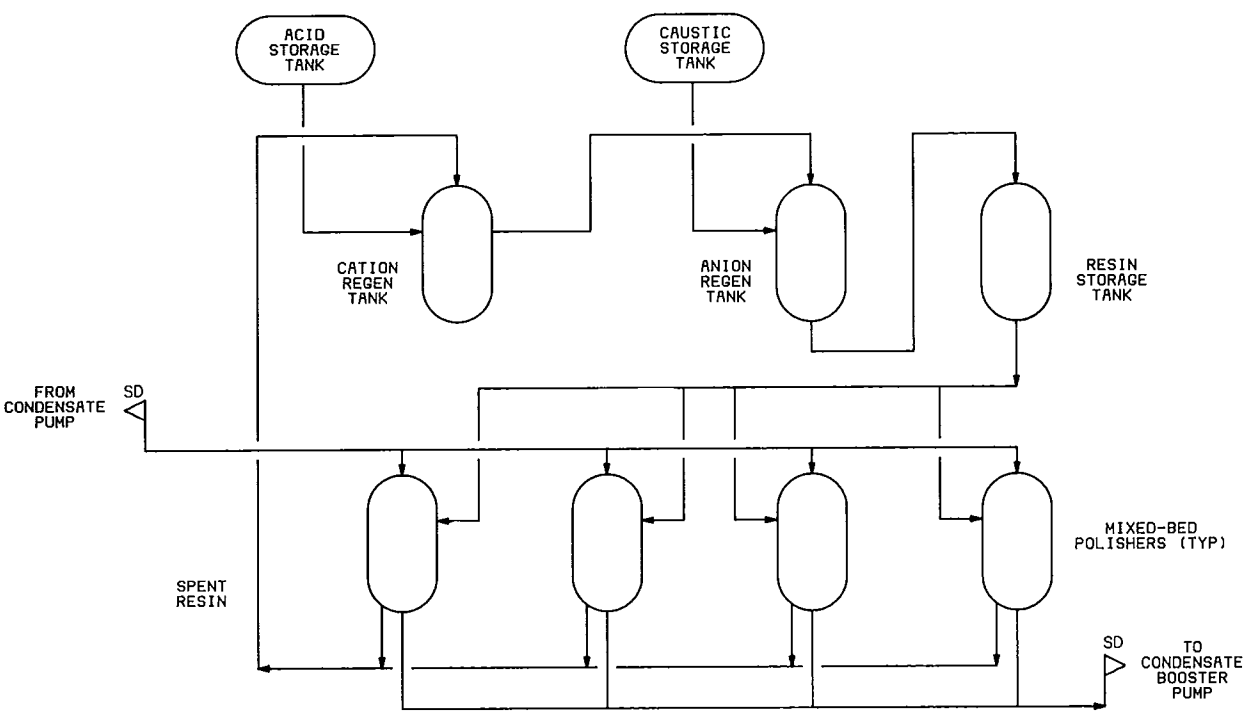

SD — Condensate System

Fig 63
Condensate Demineralizer System — SF

Copyright The Institute of Electrical and Electronics Engineers, Inc.
Provided by IHS under license with IEEE
No reproduction or networking permitted without license from IHS

Not for Resale

5.153 Condenser System—SG

5.153.1 System Function. The Condenser System is designed to condense the steam exhausted by the main turbine and feedwater pump turbines, and to maintain the required vacuum for the main turbine. The system also provides a heat sink for condensation of steam from the main turbine bypass and collects various feedwater heater drains.

5.153.2 System Description. The system primarily consists of the main condenser and feedwater pump turbine condensers.

Steam from feedwater pump turbine exhausts is condensed in the feed pump turbine condensers and routed to the main condenser. Exhaust steam from the low pressure turbine sections of the main turbine is condensed in the main condenser. The total amount of condensate, including condensate from the main feed pump turbine condenser, feedwater heater drains, and other miscellaneous sources, is routed from the main condenser hotwell to the condensate system.

5.153.3 Mode of Operation. The system operates during normal and emergency conditions. The system does not operate during a LOCA.

5.153.4 Major Interfacing Systems

Main/Reheat Steam System	SB
Condensate System	SD
Condenser Vacuum System	SH
Condenser Tube Cleaning System	SI
LP Heater Drains and Vents System	SM
HP Heater and MSR Drains and Vents System	SN
Heat Rejection System	KE
Offgas System (BWR)	WF
Turbine Drains and Miscellaneous Piping System	TF
Main Turbine System	TA
Miscellaneous Turbine Vents System	TE
Steam Generator Blowdown System	WI
Fuel Pool Cooling and Purification System (BWR)	DA
Reactor Water Cleanup System (BWR)	CE
Gland Seal Water Supply System	KO
Turbine Steam Bypass Control System	JI

5.153.5 Major Equipment

Main Condenser
Feedwater Pump Turbine Condensers

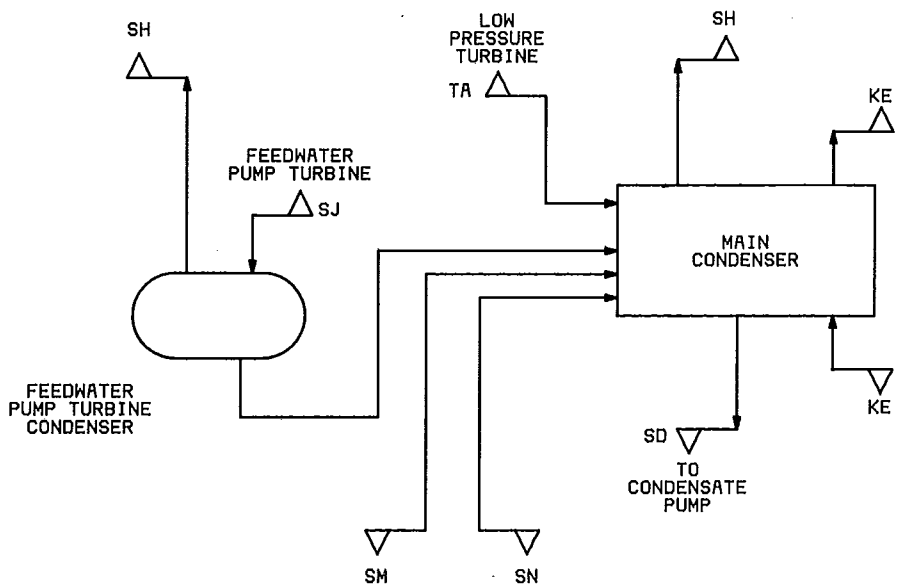

KE — Heat Rejection System
SH — Condenser Vacuum System
SN — HP Heater and MSR Drains and Vents System
SM — LP Heat Drains and Vents System
SD — Condensate System
SJ — Feedwater System
TA — Main Turbine System

Fig 64
Condenser System — SG

Copyright The Institute of Electrical and Electronics Engineers, Inc.
Provided by IHS under license with IEEE
No reproduction or networking permitted without license from IHS

Not for Resale

5.154 Condenser Vacuum System—SH

5.154.1 System Function. The condenser vacuum system is designed to remove noncondensable gases and air in-leakage from the main condenser and the main feed pump turbine condenser to insure the desired vacuum for proper turbine operation. The system also serves to create the initial condenser vacuum for plant start-up.

5.154.2 System Description. The condenser vacuum system primarily consists of vacuum pumps and/or steam jet air ejector assemblies and necessary piping, valves, instrumentation and control. During initial plant start-up vacuum pumps or hogging ejectors are used to "hog down" the main condenser and feedwater pump turbine condenser. During normal plant operation steam jet air ejector or vacuum pump maintains vacuum by removing air and noncondensable gases for proper turbine operation. Steam jet air ejector uses main steam as motive steam and condensate as cooling medium. The air ejector exhausts to offgas system (BWR plants) for any gases to be removed, treated and processed. The vacuum pump discharges to the turbine building environmental control system through a radiation monitor.

5.154.3 Mode of Operation. The system operates during normal and emergency conditions.

5.154.4 Major Interfacing Systems

Condensate System	SD
Condenser System	SG
Main/Reheat Steam System (only if Ejectors are used)	SB
Offgas System (BWR)	WF
Turbine Building Closed Cooling Water System	KB
Gland Seal Water Supply System	KO

5.154.5 Major Equipment

Steam Jet Air Ejector Assembly
Vacuum Pumps

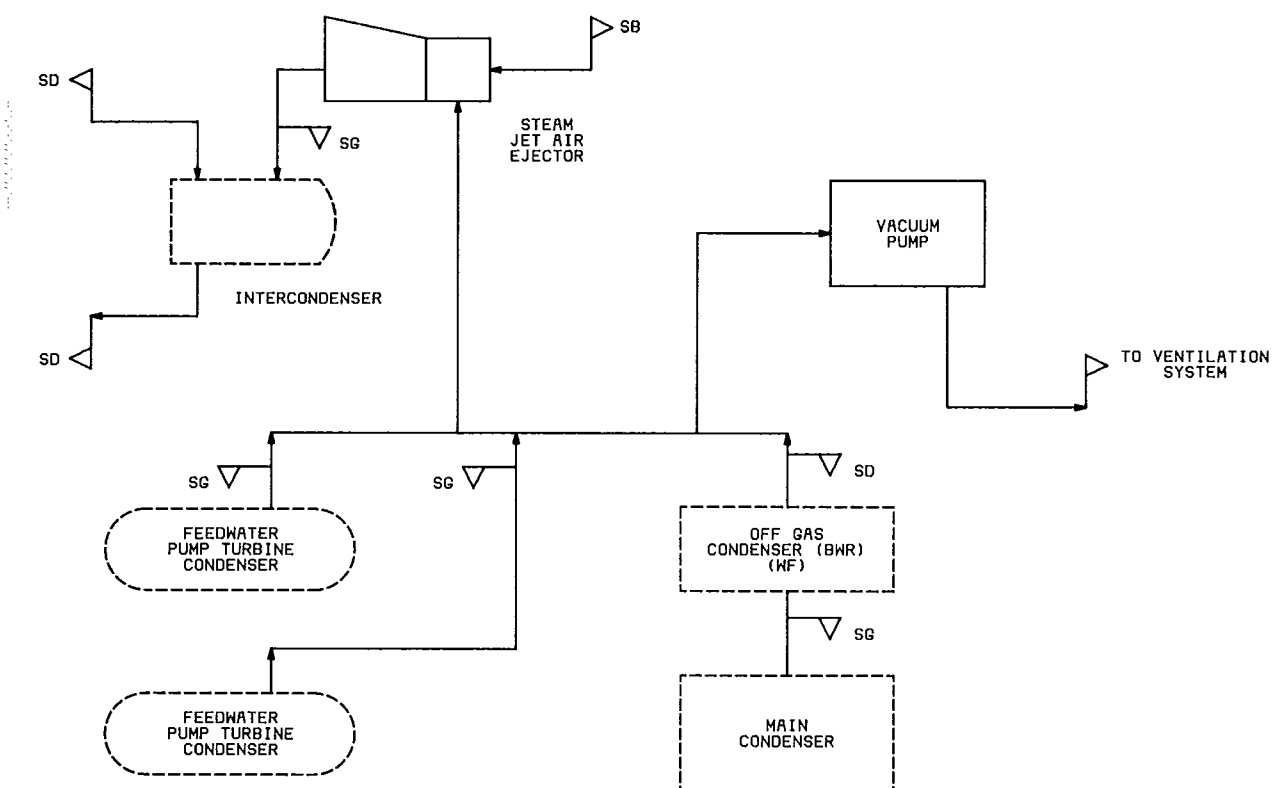

SB — Main Steam System
SD — Condensate System
SG — Condenser System

Fig 65
Condenser Vacuum System — SH

Copyright The Institute of Electrical and Electronics Engineers, Inc.
Provided by IHS under license with IEEE
No reproduction or networking permitted without license from IHS

Not for Resale

5.155 Condenser Tube Cleaning System—SI

5.155.1 System Function. The condenser tube cleaning system cleans condenser tubes to prevent formation of scale, deposits, or aquatic growth from raw cooling water, thus maintaining optimum heat transfer coefficients for proper condenser operation.

5.155.2 System Description. The most commonly used system for condenser tube cleaning is the on-line ball cleaning system. The system primarily consists of a strainer assembly, a ball collector, pumps, piping, instrumentation and control. Sponge rubber balls, slightly larger than the tube inside diameter are injected into the cooling water inlet. After passing through the tubes and cleaning them, the balls are removed at the condenser discharge by means of a ball separator (strainer assembly). A pump returns the balls to the cooling water inlet via a ball collector. The ball collector is used for removing worn out balls and replacing the ball supply. It is a continuous cleaning process at full load. In addition, a slight amount of chlorine may be injected into the circulating water during normal operation.

The system usually services the main condenser and the feedwater pump condensers, although some designs also service the turbine building cooling water heat exchangers.

5.155.3 Mode of Operation. The system operates during normal conditions.

5.155.4 Major Interfacing Systems

Condenser System	SG
Heat Rejection System	KE

5.155.5 Major Equipment

Sponge Balls with Abrasive Coating
Pump
Strainer
Ball Collector

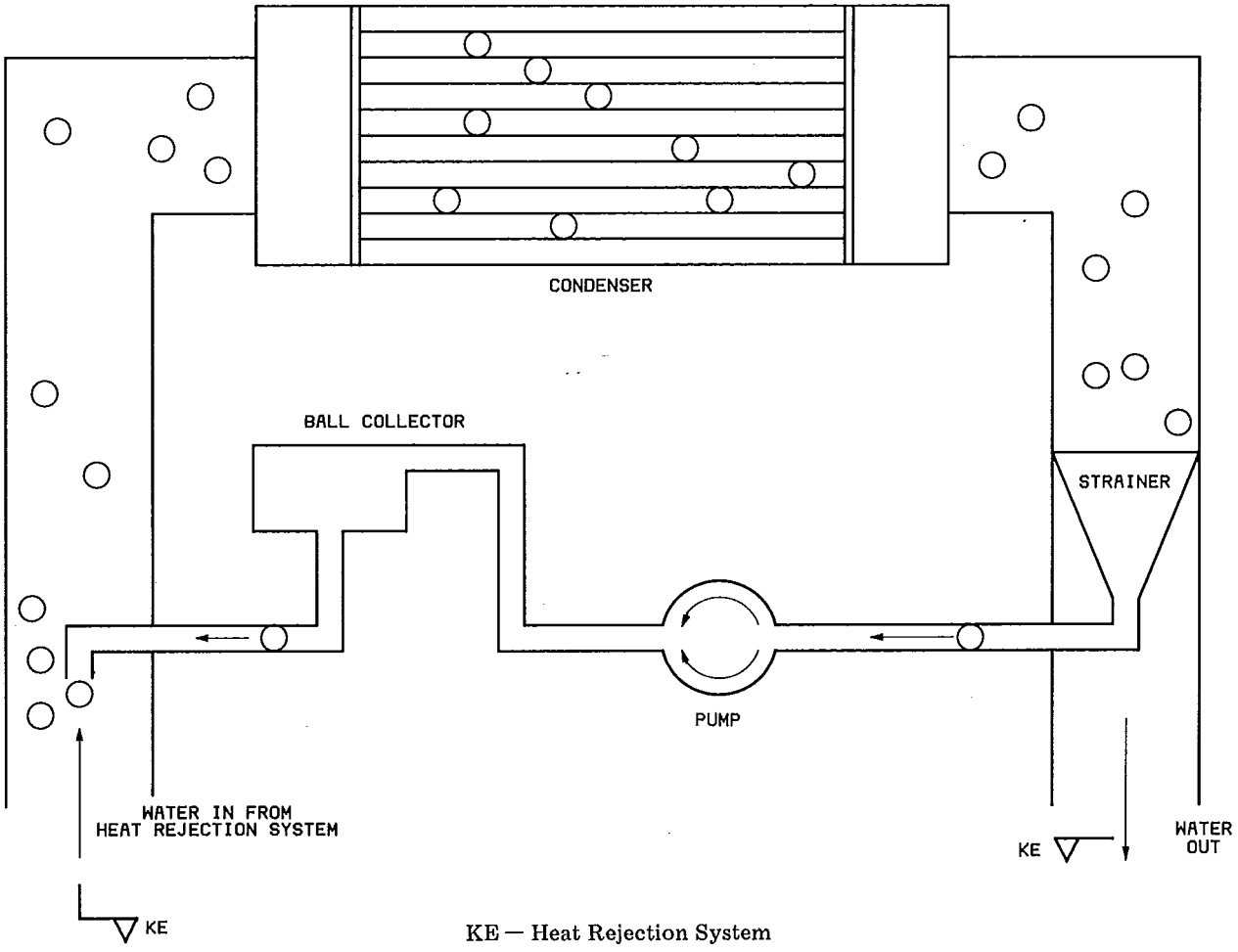

KE — Heat Rejection System

Fig 66
Condenser Tube Cleaning System — SI

Copyright The Institute of Electrical and Electronics Engineers, Inc.
Provided by IHS under license with IEEE
No reproduction or networking permitted without license from IHS

Not for Resale

5.156 Feedwater System—SJ

5.156.1 System Function. The feedwater system provides feedwater to the steam generators or to the reactor vessel at the required flow and pressure under all anticipated steady state and transient conditions.

5.156.2 System Description. The system primarily consists of feedwater pumps, high pressure feedwater heaters, and piping, valves, instrumentation and controls necessary for proper operation of the system. The feedwater pumps take suction from the condensate system and pump condensate through the high pressure feedwater heaters. The pumps are either turbine driven or electric motor driven. The feedwater leaving the heaters is then fed to the steam generator or to the reactor vessel at the required flow and pressure. The system's boundary extends from the suction of feedwater pump to the inlet nozzle of the steam generator or to the reactor vessel.

5.156.3 Mode of Operation. The system operates during normal and emergency conditions. It does not operate during a LOCA.

5.156.4 Major Interfacing Systems

Condensate System	SD
Steam Extraction System	SE
Main/Reheat Steam System	SB
High-Pressure Coolant Injection System (BWR)	BJ
Reactor Coolant System (PWR)	AB
Reactor Recirculation System (BWR)	AD
Feedwater/Steam Generator Water Level Control System	JB
Turbine Building Closed Cooling Water System	KB
Sampling and Water Quality System	KN
Gland Seal Water Supply System	KO
Auxiliary Steam System	SA
Feedwater Pump Injection System	SK
Reactor Power Control System	JD
Reactor Water Cleanup System (BWR)	CE
Feedwater Pump Turbine Instrumentation and Control System	JK
Condensate and Feedwater Chemistry Control System	KD
LP Heater Drains and Vents System	SM
HP Heater and MSR Drains and Vents System	SN

5.156.5 Major Equipment

Feedwater Pumps and Drives
HP Feedwater Heaters

AB — Reactor Coolant System (PWR)
AD — Reactor Recirculation System (BWR)
BJ — High Pressure Coolant Injection System (BWR)
SD — Condensate System
SE — Steam Extraction System
SK — Feedwater Pump Injection System

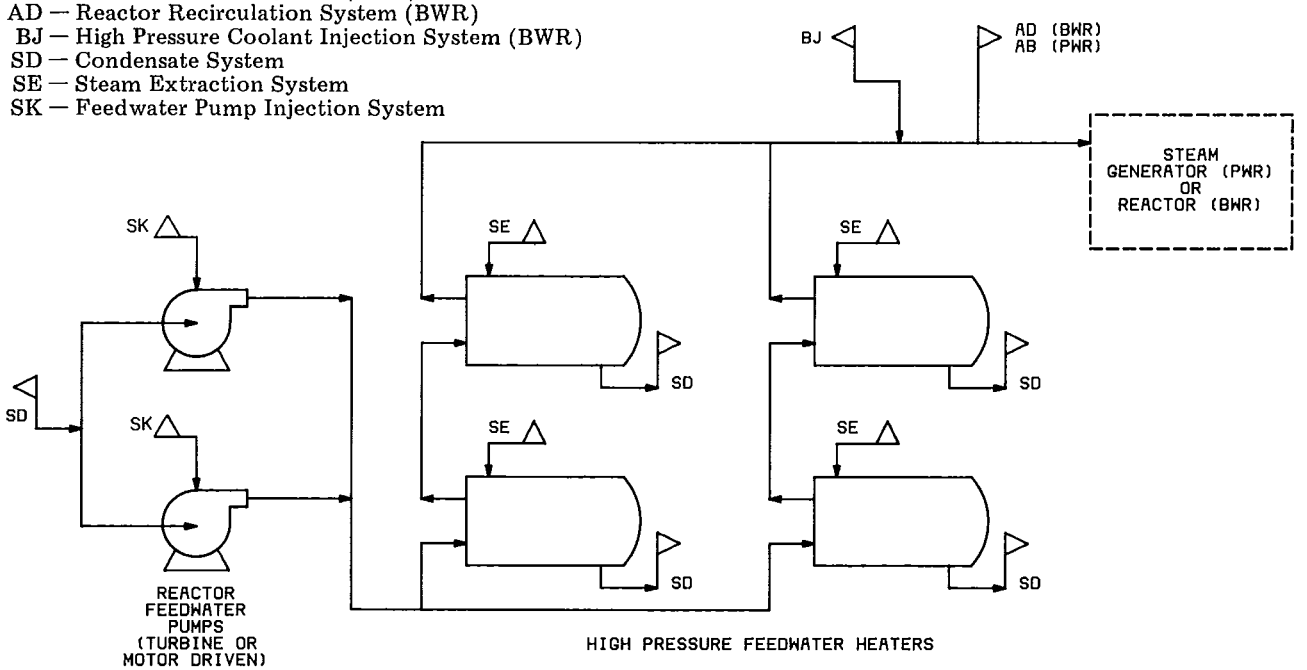

Fig 67
Feedwater System — SJ

Copyright The Institute of Electrical and Electronics Engineers, Inc.
Provided by IHS under license with IEEE
No reproduction or networking permitted without license from IHS

Not for Resale

5.157 Feedwater Pump Injection System —SK

5.157.1 System Function. Feedwater pump injection system serves to cool and to provide water sealing to the pump seals by supplying condensate to the seals of the feedwater pumps.

5.157.2 System Description. The feedwater injection pump takes its suction from the condensate pump discharge and delivers to the pump seals of the feedwater pumps. The amount of condensate to be supplied is regulated by the temperature of the seal drain water. A temperature controller continuously reads the seal drain temperature and provides a signal to the control valve which regulates the condensate injection flow rate to maintain a constant seal drain temperature. The system may also supply seal water to pumps with similar service such as heater drain tank pumps and include miscellaneous piping and a tank for the intermediate collection of various condensate drainage, such as cooling water leakoff from the feedwater pump seals.

5.157.3 Mode of Operation. The system operates during normal and emergency conditions. It does not operate during a LOCA.

5.157.4 Major Interfacing Systems

Condensate System	SD
Feedwater System	SJ

5.157.5 Major Equipment. Atmospheric Condensate Drain Tank (some designs)

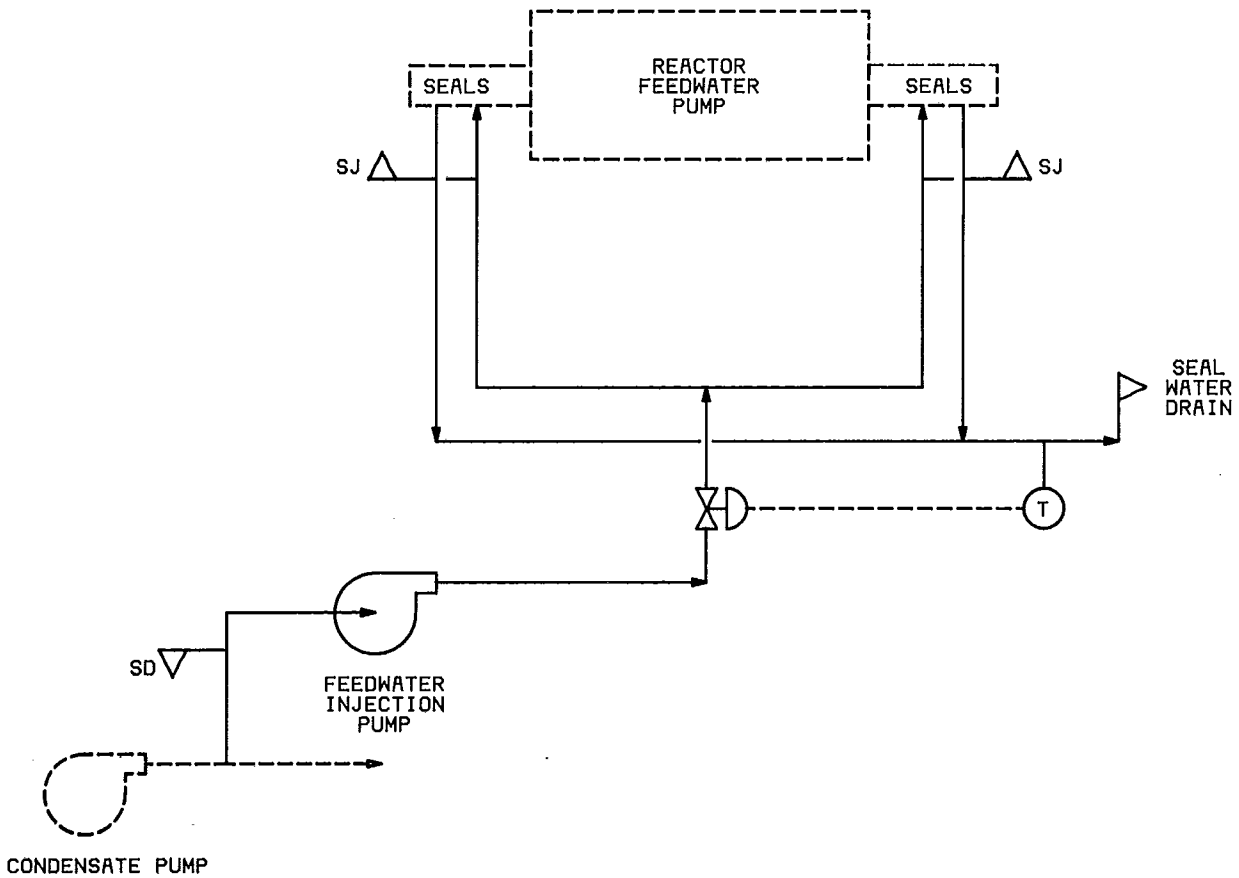

SD — Condensate System
SJ — Feedwater System

Fig 68
Feedwater Pump Injection and Miscellaneous System — SK

Copyright The Institute of Electrical and Electronics Engineers, Inc.
Provided by IHS under license with IEEE
No reproduction or networking permitted without license from IHS

Not for Resale

5.158 Feedwater Pump Turbine Lube Oil System—SL

5.158.1 System Function. The feedwater pump turbine lube oil system provides lubricating oil to the bearings of the feedwater pump turbine and provides purification of the lube oil.

5.158.2 System Description. The feedwater pump turbine lube oil system consists of a lube oil tank, filter, pump, piping, instrumentation, and controls necessary for proper operation of the system. The lube oil pump delivers oil from the lube oil tank through the lube oil cooler to various bearings served by the system. The oil in the tank is continuously passed through a portable purifier to keep it free from particulate matter and moisture. The return oil from the feedwater pump turbine bearings is routed to the lube oil tank. The lube oil tank receives its supply of clean purified oil from the lube oil storage and transfer system.

5.158.3 Mode of Operation. The system operates during normal and emergency conditions. It does not operate during a LOCA.

5.158.4 Major Interfacing Systems

Lube Oil Storage and Transfer System	LM
Lube Oil System	LL

5.158.5 Major Equipment

Lube Oil Pump
Lube Oil Purifier
Lube Oil Cooler
Lube Oil Tank

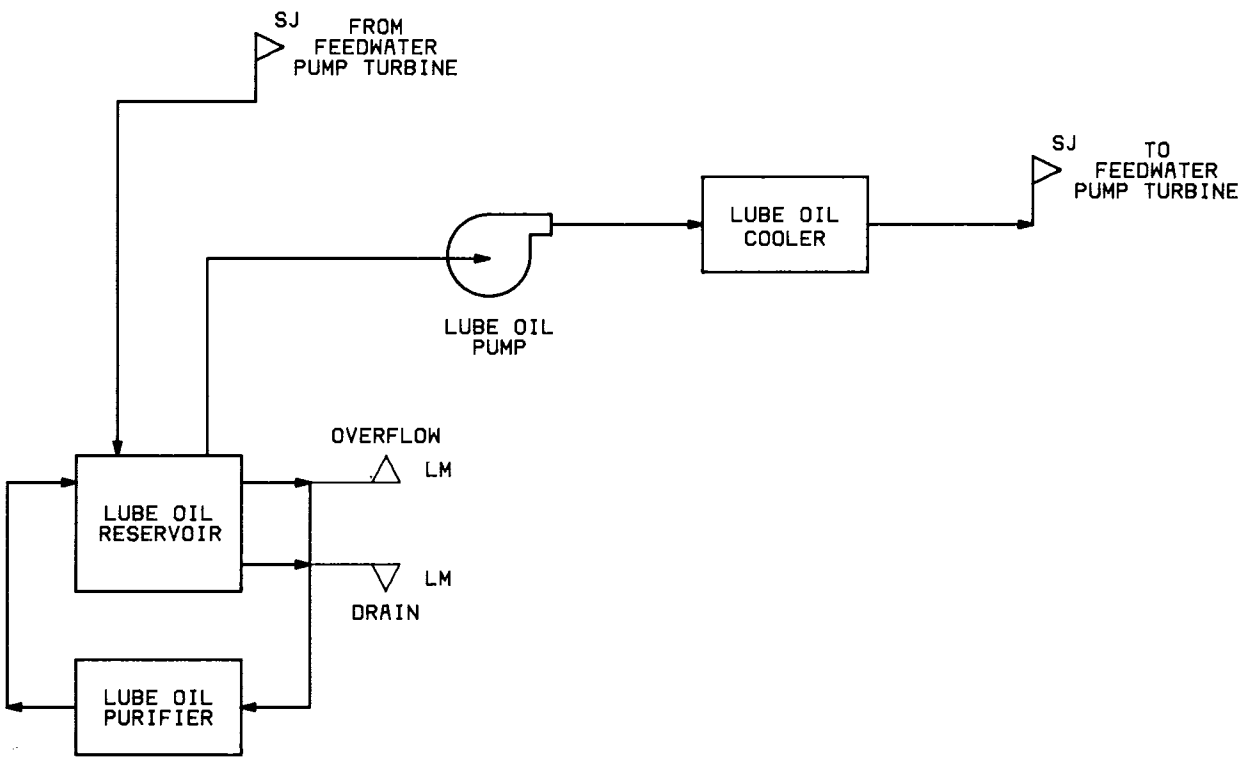

SJ — Feedwater System
LM — Lube Oil Storage and Transfer System

Fig 69
Feedwater Pump Turbine Lube Oil System — SL

Copyright The Institute of Electrical and Electronics Engineers, Inc.
Provided by IHS under license with IEEE
No reproduction or networking permitted without license from IHS

Not for Resale

5.159 LP Heater Drains and Vents System —SM

5.159.1 System Function. Low-pressure heater drains and vents system is designed to remove condensate from the low-pressure feedwater heaters and other plant equipment. The system also serves to vent noncondensable gases from various equipment.

5.159.2 System Description. The condensed extraction steam from the shell side of the low-pressure feedwater heaters is collected and returned either to the main condenser or pumped forward to the condensate system. Drains from other equipment such as the off-gas condenser, air ejector intercondenser (BWR plants only), and other steam plant equipment flow directly to the main condenser. The heater vent system routes noncondensable gases to the main condenser.

5.159.3 Mode of Operation. The system operates during normal and emergency conditions. It does not operate during a LOCA.

5.159.4 Major Interfacing Systems

Condenser System	SG
Condensate System	SD
Feedwater System	SJ
Extraction Steam System	SE
Sampling and Water Quality System	KN
Gland Seal Water Supply System	KO

5.159.5 Major Equipment

Drain Pumps
Drain Tanks (optional)

Copyright The Institute of Electrical and Electronics Engineers, Inc.
Provided by IHS under license with IEEE
No reproduction or networking permitted without license from IHS

Not for Resale

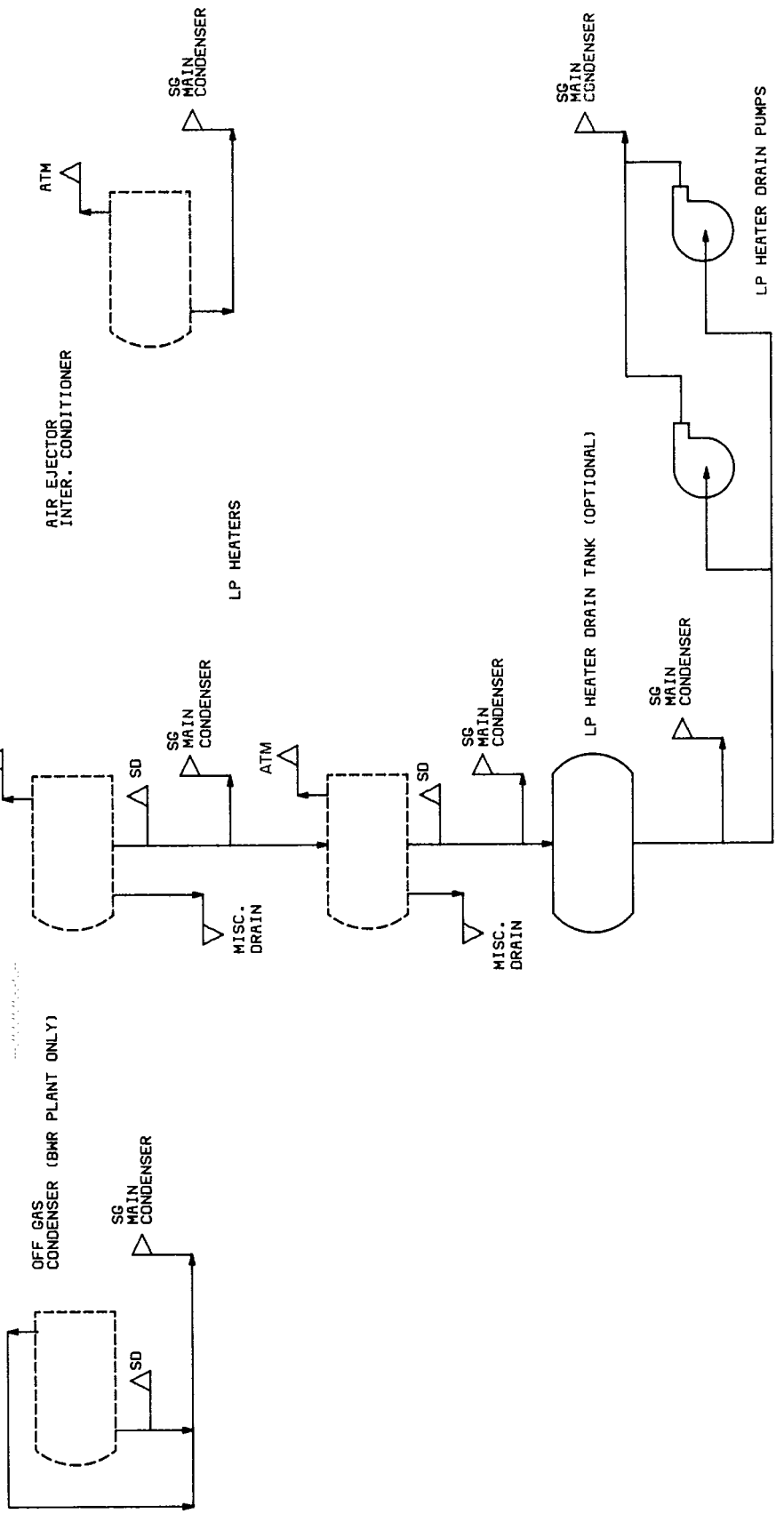

Fig 70
LP Heater Drains and Vents System — SM

SD — Condensate System
SG — Condenser System
ATM — Atmosphere

Copyright The Institute of Electrical and Electronics Engineers, Inc.
Provided by IHS under license with IEEE
No reproduction or networking permitted without license from IHS
Not for Resale

5.160 HP Heater and MSR Drains and Vents System—SN

5.160.1 System Function. High-pressure heaters and moisture separator reheater drains and vents system is designed to remove condensate from the high-pressure feedwater heaters and the moisture separator reheater. The system also serves to vent noncondensable gases from the heaters.

5.160.2 System Description. The system primarily consists of drain pumps, piping, valves instrumentation and controls.

The condensed extraction steam from the shell side of the high-pressure feedwater heaters and moisture separator reheater drain is routed to the feedwater pump suction or to the main condenser. The vent system routes noncondensable gases to the main condenser.

5.160.3 Mode of Operation. The system operates during normal and emergency conditions. It does not operate during a LOCA.

5.160.4 Major Interfacing Systems

Condenser System	SG
Condensate System	SD
Feedwater System	SJ
Extraction Steam System	SE
Main/Reheat Steam System	SB
Turbine Building Closed Cooling Water System	KB
Sampling and Water Quality System	KN
Gland Seal Water Supply System	KO

5.160.5 Major Equipment. Drain Pumps

Table 16

	Power Conversion Systems Group	Plant Type		Revision
TA	Main Turbine System	B	P	
TB	Main Generator System	B	P	
TC	Turbine Steam Seal System	B	P	
TD	Turbine Lube Oil System	B	P	
TE	Miscellaneous Turbine Vents System	B	P	
TF	Turbine Drains and Miscellaneous Piping System	B	P	
TG	Main Turbine Control Fluid System	B	P	
TH	Main Generator Gas Purge System	B	P	
TI	Main Generator Seal Oil System	B	P	
TJ	Main Generator Stator Cooling System	B	P	
TK	Main Generator Hydrogen Cooling System	B	P	
TL	Main Generator Excitation System	B	P	

B—BWR P—PWR

Copyright The Institute of Electrical and Electronics Engineers, Inc.
Provided by IHS under license with IEEE
No reproduction or networking permitted without license from IHS
Not for Resale

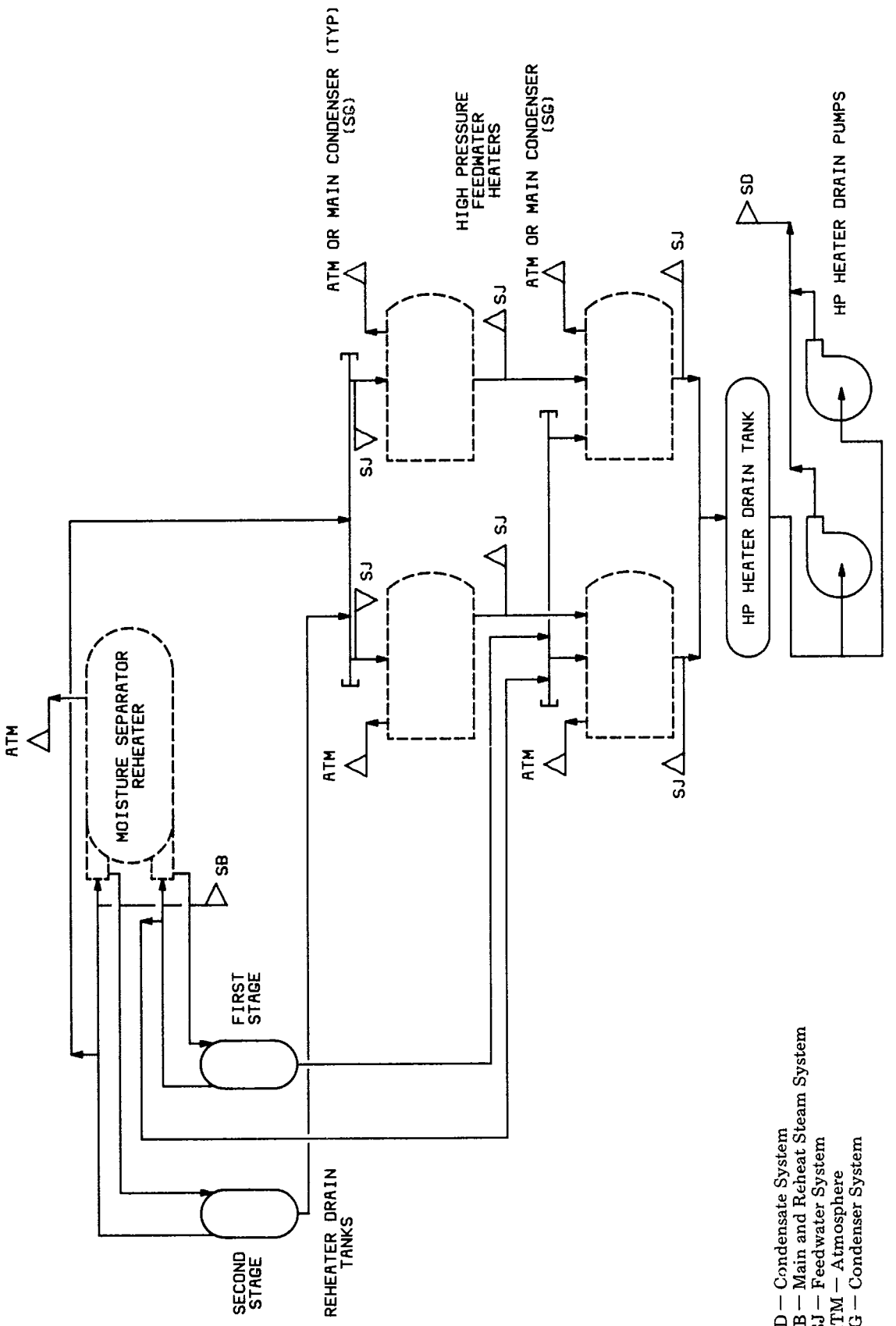

Fig 71
HP Heater and MSR Drains and Vents Systems — SN

Copyright The Institute of Electrical and Electronics Engineers, Inc.
Provided by IHS under license with IEEE
No reproduction or networking permitted without license from IHS

Not for Resale

5.161 Main Turbine System—TA

5.161.1 System Function. The main turbine system is designed to convert thermal energy from the main and reheat steam system into mechanical energy to be used as motive power for the electrical generator.

5.161.2 System Description. The main turbine system primarily consists of a high-pressure steam turbine coupled in tandem to the low-pressure steam turbines. Steam is supplied to the high-pressure turbine from the main steam system. The steam passes through the turbine and produces a rotation of the turbine shaft. Upon its exit from the high-pressure turbine, steam enters the moisture separator and reheater which supplies steam to the low-pressure turbines. The steam passes through the low-pressure turbines and produces a rotation of the shaft. The high- and low-pressure turbines are coupled together and turn in unison to drive an electric generator.

5.161.3 Mode of Operation. The system operates during normal and emergency conditions. It does not operate during a LOCA.

5.161.4 Major Interfacing Systems

Condenser System	SG
Main/Reheat Steam System	SB
Steam Extraction System	SE
Main Generator System	TB
Turbine Drains and Miscellaneous Piping System	TF
Turbine Lube Oil System	TD
Turbine Steam Seal System	TC
Miscellaneous Turbine Vents System	TE
Main Turbine Control Fluid System	TG
Main Generator Output Power System	EL
Main Turbine Instrumentation System	IT
Integrated Control System	JA
Turbine Supervisory Control System	JJ

5.161.5 Major Equipment. Main Turbine

Copyright The Institute of Electrical and Electronics Engineers, Inc.
Provided by IHS under license with IEEE
No reproduction or networking permitted without license from IHS

Not for Resale

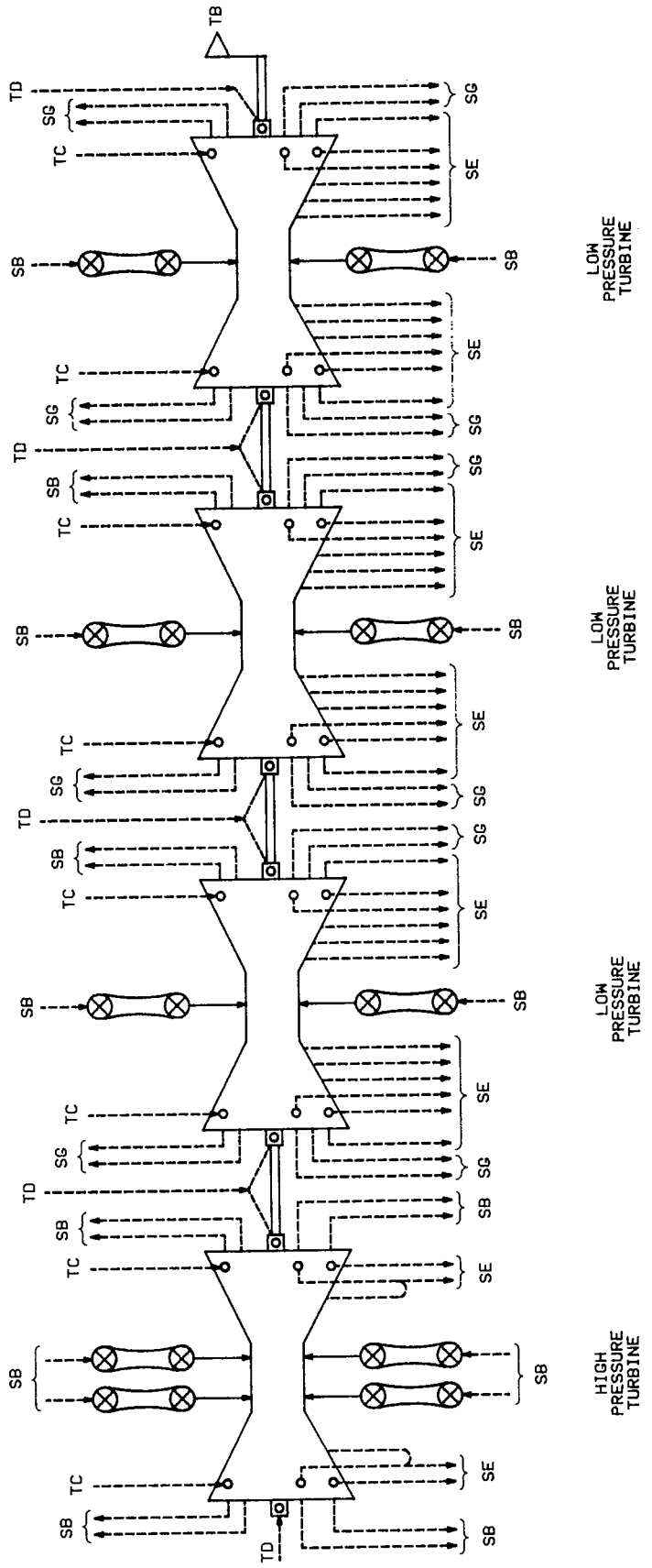

SB — Main/Reheat Steam System
TC — Turbine Steam Seal System
TD — Turbine Lube Oil System
SG — Condenser System
SE — Steam Extraction System
TB — Main Generator System

Fig 72
Main Turbine System — TA

Copyright The Institute of Electrical and Electronics Engineers, Inc.
Provided by IHS under license with IEEE
No reproduction or networking permitted without license from IHS

Not for Resale

5.162 Main Generator System—TB

5.162.1 System Function. The main generator system converts the mechanical energy produced by the turbine into electric power.

5.162.2 System Description. The main generator system consists of the main generator. The excitation equipment, the hydrogen cooling equipment, the seal oil line equipment, and the stator water or hydrogen cooling equipment are contained within the generator housing or closely interfaced with the generator package. The electric power produced in the generator is connected to the step-up transformers through an isolated phase bus.

5.162.3 Mode of Operation. The system operates during normal and emergency conditions. It does not operate during a LOCA.

5.162.4 Major Interfacing Systems

Main Turbine System	TA
Medium-Voltage Power System	EA
Low-Voltage Power System	EC
Main Generator Gas Purge System	TH
Main Generator Seal Oil System	TI
Main Generator Stator Cooling System	TJ
Main Generator Hydrogen Cooling System	TK
Main Generator Excitation System	TL
Turbine Lube Oil System	TD
Medium-Voltage Power System—Class 1E	EB
Main Generator Output Power System	EL
Insulating Oil System	LN

5.162.5 Major Equipment. Main Generator

5.163 Turbine Steam Seal System—TC

5.163.1 System Function. The turbine steam seal system serves to prevent air inleakage into the turbines or steam out of the turbines during start-up and normal operation.

5.163.2 System Description. The turbine steam seal system maintains correct positive pressure at steam seal leakoff points and slight vacuum at vent annulus points.

During normal operation the steam seal leakoffs on turbine pressure packings get steam from inside of the turbine shell; during start-up or light load, when a vacuum exists throughout the turbine, outside steam must be fed into the pressure packings.

Turbine vacuum packings are those which always seal against a vacuum. Therefore, steam must be supplied to them at all loads.

A vent annulus receives leaking steam from the seal leakoff and also air from the atmospheric side of the packing. This steam-air mixture is conveyed to and condensed in a gland steam condenser. The gland steam condenser is cooled by the condensate from the Condensate System.

Outside steam for start-up or light load operation is supplied from the auxiliary steam system or from the main/reheat steam system.

5.163.3 Mode of Operation. The system operates during normal and emergency conditions. It does not operate during a LOCA.

5.163.4 Major Interfacing Systems

Main Turbine System	TA
Main/Reheat Steam System	SB
Auxiliary Steam System	SA
Condensate System	SD
Gland Seal Water Supply System	KO

5.163.5 Major Equipment. The equipment for the turbine steam seal system is supplied with the main turbine generator package.

Copyright The Institute of Electrical and Electronics Engineers, Inc.
Provided by IHS under license with IEEE
No reproduction or networking permitted without license from IHS
Not for Resale

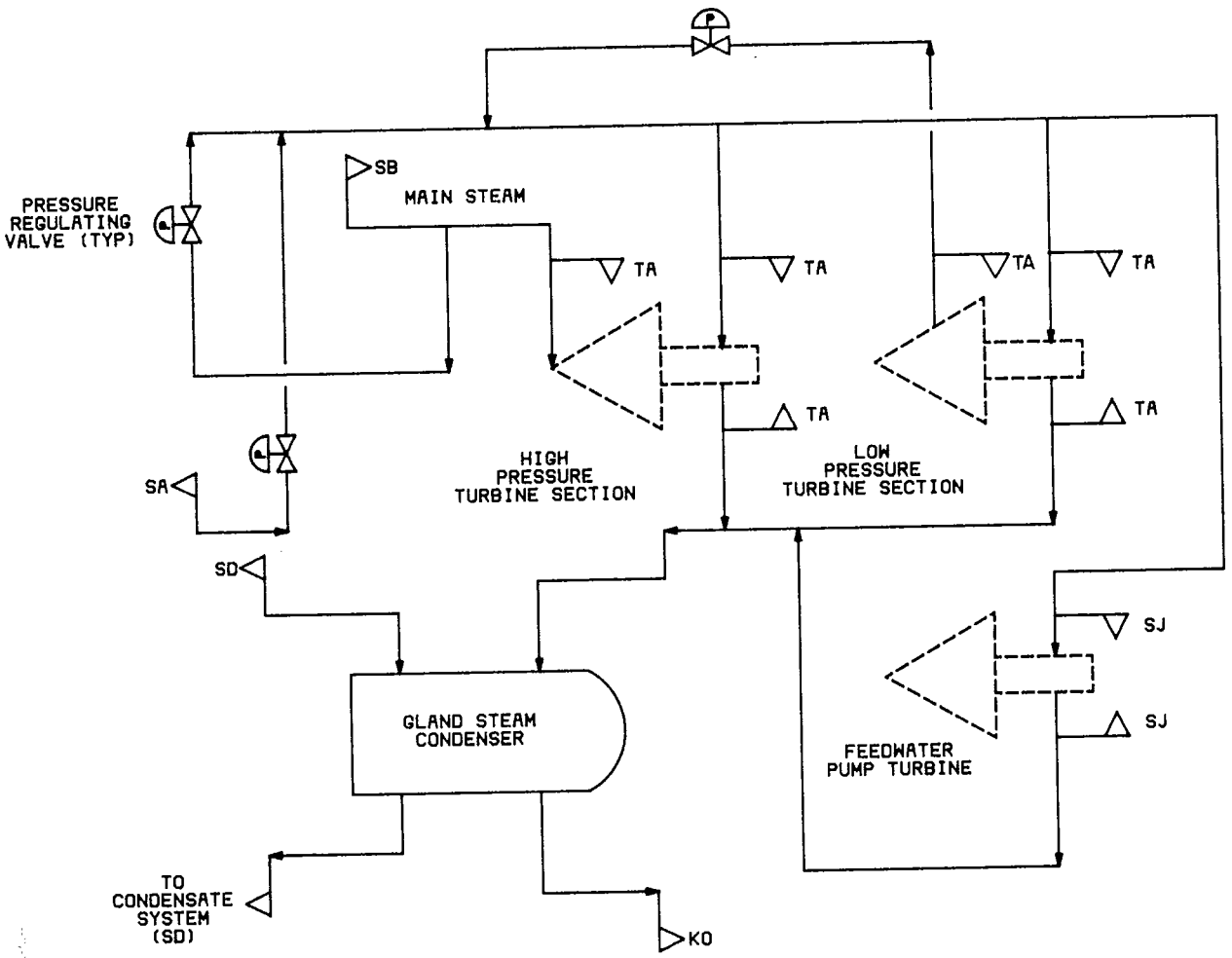

SA — Auxiliary Steam System
SD — Condensate System
KO — Gland Seal Water Supply System
SJ — Feedwater System
SB — Main and Reheat Steam System

Fig 73(a)
(a) Turbine Steam Seal System — TC

Copyright The Institute of Electrical and Electronics Engineers, Inc.
Provided by IHS under license with IEEE
No reproduction or networking permitted without license from IHS

 Not for Resale

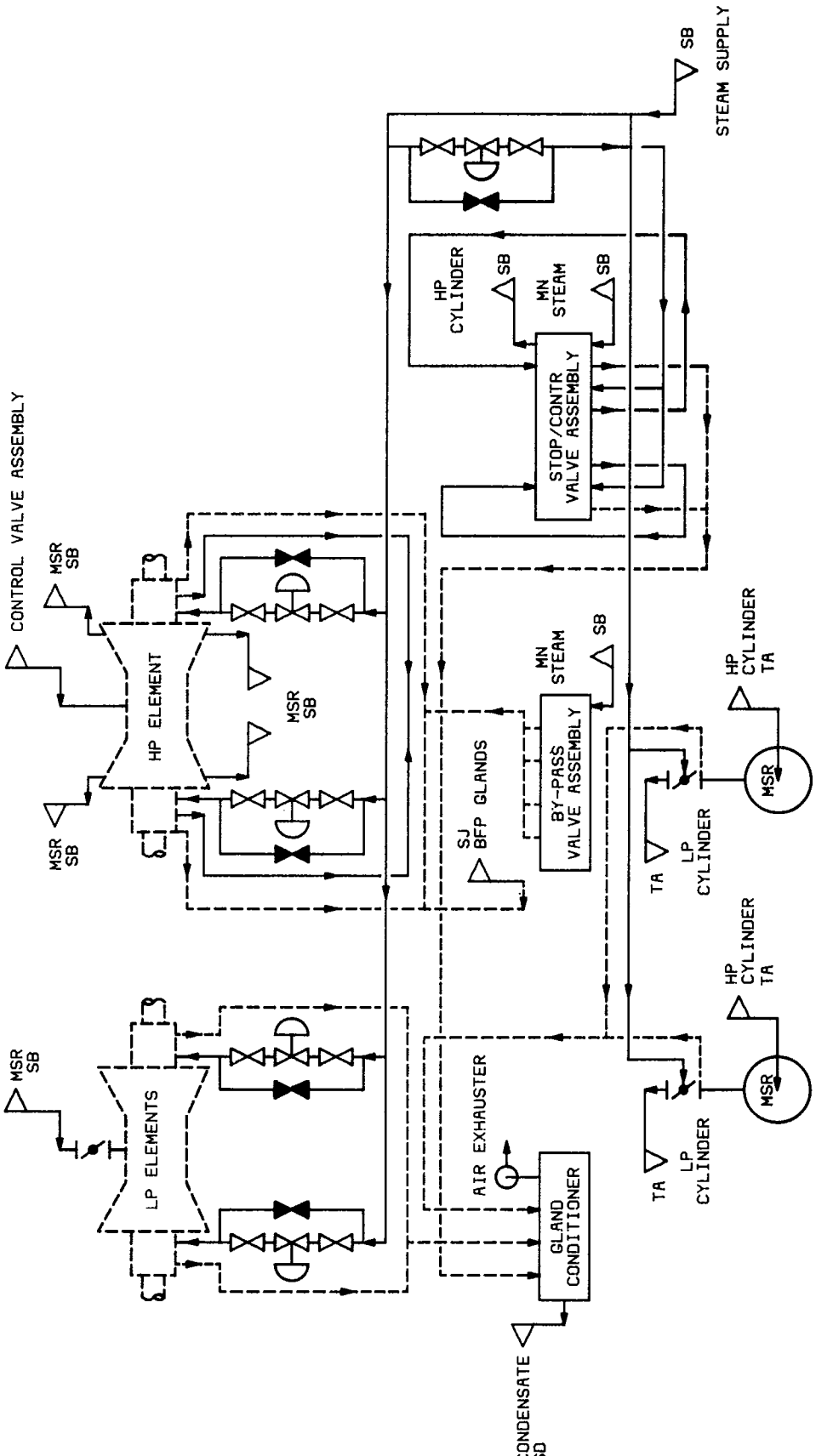

Fig 73(b)
(b) Turbine Steam Seal System — TC

Copyright The Institute of Electrical and Electronics Engineers, Inc.
Provided by IHS under license with IEEE
No reproduction or networking permitted without license from IHS

Not for Resale

5.164 Turbine Lube Oil System—TD

5.164.1 System Function. The turbine lube oil system provides lubricating oil to the various bearings of the turbine and generator. In addition, the system serves to provide turbine bearing lift oil and lubrication for the turning gears.

5.164.2 System Description. The turbine lube oil system primarily consists of a lube oil tank, filter, coolers, pumps, piping, instrumentation and controls necessary for proper operation of the system. The turbine shaft driven main lube oil pump delivers oil from the lube oil tank through the lube oil cooler to various bearings served by the system. An emergency pump and a start-up pump assure lube oil delivery to turbine bearings when lube oil from the main pump is not available. The lube oil tank receives its supply of clean purified oil from the lube oil storage and transfer system. A purifier is used to keep oil in the tank free from particulate matter and moisture. The used oil from the turbine and generator bearings is returned to the lube oil tank.

5.164.3 Mode of Operation. The system operates during normal and emergency conditions. It does not operate during a LOCA.

5.164.4 Major Interfacing Systems

Main Turbine System	TA
Main Generator System	TB
Lube Oil Storage and Transfer System	LM
Nonessential Service Water System	KG
Lube Oil System	LL

5.164.5 Major Equipment

Lube Oil Tank
Lube Oil Pumps
Lube Oil Coolers
Oil Purifier

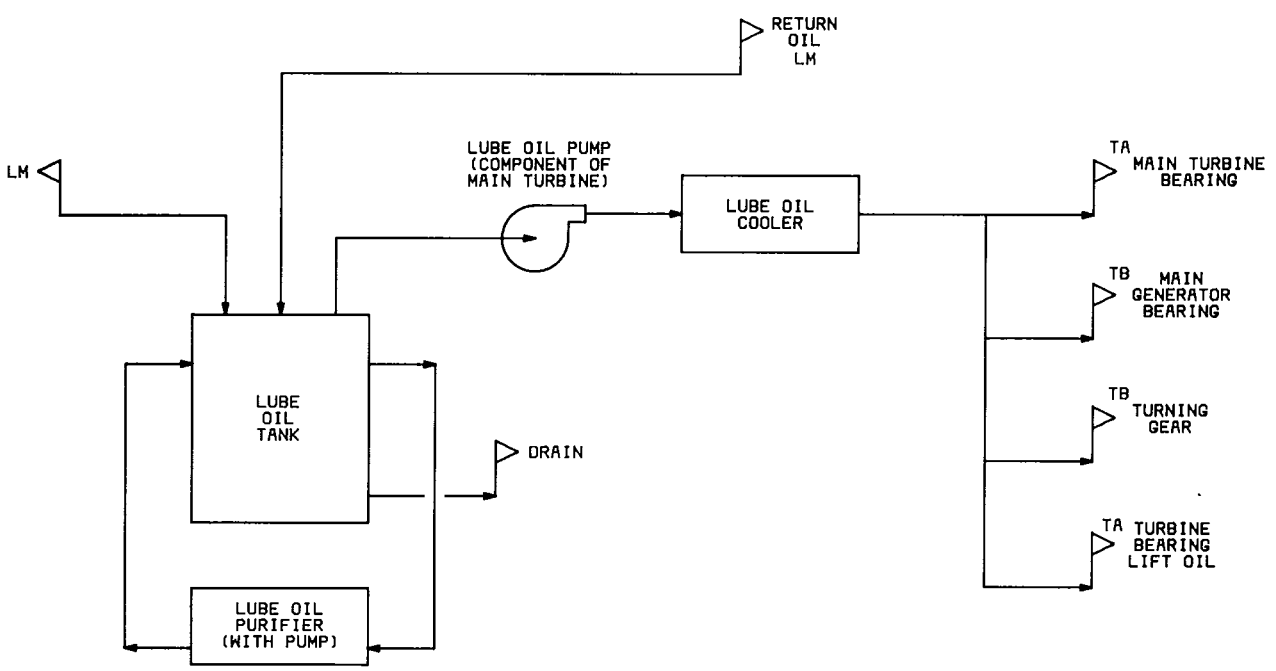

LM — Lube Oil Storage and Transfer System
TA — Main Turbine System
TB — Main Generator System

Fig 74
Turbine Lube Oil System — TD

Copyright The Institute of Electrical and Electronics Engineers, Inc.
Provided by IHS under license with IEEE
No reproduction or networking permitted without license from IHS
Not for Resale

5.165 Miscellaneous Turbine Vents System —TE

5.165.1 System Function. The miscellaneous turbine vents system serves to remove noncondensable gases from local high points within the main turbine and the feedwater pump turbines.

5.165.2 System Description. The system primarily consists of piping and valves which route the extracted vapor from piping connections on the turbines to the main condenser. The noncondensable gases are removed from the main condenser by the condenser vacuum system.

5.165.3 Mode of Operation. The system operates during normal and emergency conditions. It does not operate during a LOCA.

5.165.4 Major Interfacing Systems

Main Turbine System	TA
Condenser System	SG

5.165.5 Major Equipment. None

5.166 Turbine Drains and Miscellaneous Piping System—TF

5.166.1 System Function. The turbine drains and miscellaneous piping system serves to drain condensate from low point pockets within the main turbine and the steam extraction system where moisture may have collected during start-up and due to condensation and/or disentrainment of steam-carried moisture during normal operation. In addition, the feedwater pump turbines and miscellaneous steam related components also have accumulated condensate removed by this system.

5.166.2 System Description. The system primarily consists of piping and valves which route the condensate from piping connections on the turbines and other components to the connections on either the main condenser or the main feedwater pump turbine condensers.

5.166.3 Mode of Operation. The system operates during normal and emergency conditions. It does not operate during a LOCA.

5.166.4 Major Interfacing Systems

Main Turbine System	TA
Condenser System	SG
Steam Extraction System	SE

5.166.5 Major Equipment. None.

5.167 Main Turbine Control Fluid System —TG

5.167.1 System Function. The main turbine control fluid system supplies high-pressure fire-resistant hydraulic fluid to the main turbine instrumentation and control system to serve as the primary hydraulic medium for operating the main turbine control valves, stop valves, and intercept valves.

5.167.2 System Description. The system contains two independent 100% capacity pumping systems. Each pumping system consists of a motor-driven variable output piston pump, a strainer on the pump intake, and a filter on the discharge side of the pump. Each pumping system takes suction from a hydraulic fluid reservoir and discharges to a high-pressure manifold from which hydraulic fluid is distributed to the various mechanisms serviced. In order to meet large transient flow demands, two high pressure nitrogen-charged accumulators are connected to each high-pressure manifold.

Control fluid returning to the system flows to a return manifold through two hydraulic fluid cooler heat exchangers where heat is rejected. The fluid then flows into the fluid reservoir.

5.167.3 Mode of Operation. The system operates during normal and emergency conditions. It does not operate during a LOCA.

5.167.4 Major Interfacing Systems

Main Turbine System	TA
Turbine Supervisory Control System	JJ
Main Turbine Instrumentation System	IT
Turbine Building Closed Cooling Water System	KB

5.167.5 Major Equipment. Equipment for the main turbine control fluid system is supplied with the main turbine generator package.

Copyright The Institute of Electrical and Electronics Engineers, Inc.
Provided by IHS under license with IEEE
No reproduction or networking permitted without license from IHS

Not for Resale

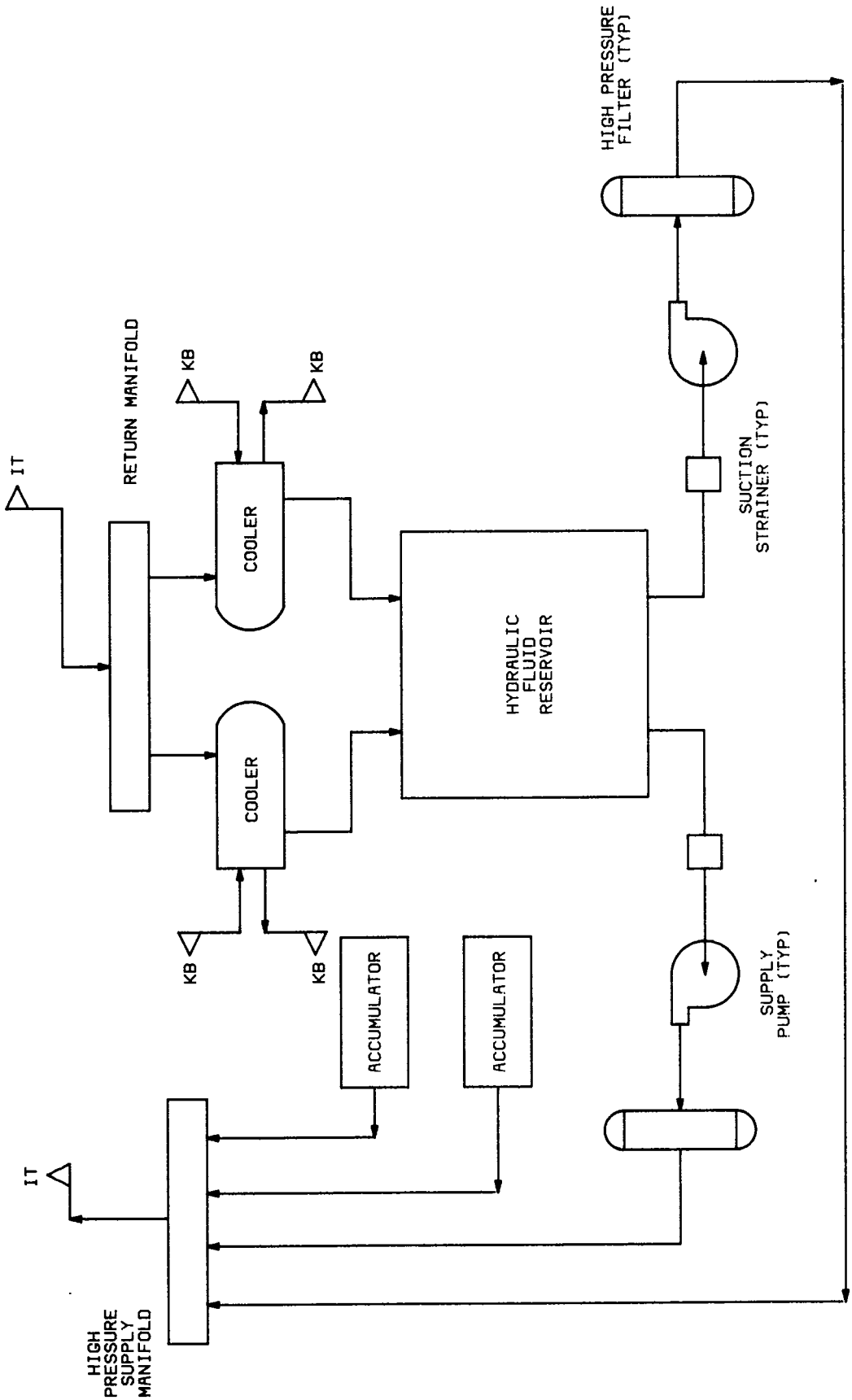

IT — Main Turbine Instrumentation System
KB — Turbine Building Closed Cooling Water System

Fig 75
Main Turbine Control Fluid System — TG

Copyright The Institute of Electrical and Electronics Engineers, Inc.
Provided by IHS under license with IEEE
No reproduction or networking permitted without license from IHS

Not for Resale

5.168 Main Generator Gas Purge System —TH

5.168.1 System Function. The main generator gas purge system supplies low-pressure inert gas to the main generator hydrogen cooling system for purging the system during initial fill with hydrogen gas and to prevent formation of an explosive hydrogen mixture.

5.168.2 System Description. The main generator gas purge system primarily consists of piping headers, valves, and controls necessary to supply inert gas for purging of the hydrogen supply system and the main generator hydrogen cooling system. Either nitrogen or carbon dioxide gas are used for purging.

5.168.3 Mode of Operation. The system operates during normal and emergency conditions. It does not operate during a LOCA.

5.168.4 Major Interfacing Systems

Main Generator Hydrogen Cooling System	TK
Main Generator System	TB
Carbon Dioxide (CO_2) Supply System (if purged with CO_2)	LW

5.168.5 Major Equipment. None

5.169 Main Generator Seal Oil System—TI

5.169.1 System Function. The main generator seal oil system prevents the hydrogen used for cooling the main generator from escaping to the plant environment from within the generator housing by injecting oil under pressure into the annular region between the generator shaft and the shaft seal.

5.169.2 System Description. The system maintains a reservoir of oil in a storage tank from which one main pump takes suction. The pump discharge is passed through a filter and then fed to each generator shaft seal. Oil flow from the shaft seal is collected in a deentrainment device on both the oil and hydrogen sides of the shaft seal. The deentrainment device removes any air or hydrogen gas from the oil before it is returned to the storage tank. A vacuum pump removes vapor from the storage tank and discharges through an oil separator to the atmosphere.

5.169.3 Mode of Operation. The system operates during normal and emergency conditions. It does not operate during a LOCA.

5.169.4 Major Interfacing Systems

Main Generator System	TB
Lube Oil System	LL

5.169.5 Major Equipment. The equipment for the main generator seal oil system is supplied with the main turbine generator package.

5.170 Main Generator Stator Cooling System—TJ

5.170.1 System Function. The main generator stator cooling system circulates demineralized water through the stator of the main generator and in some cases through the rectifiers of the excitation system to provide cooling to those components.

5.170.2 System Description. The system consists of a storage tank, pumps, filters, coolers, piping, valves, instrumentation and controls. The storage tank serves as a water reservoir from which the pump takes suction. The pump circulates water through and/or around system cooler heat exchangers as proportioned by temperature mixing valves. In some designs the cooled demineralized water from the cooler flows to the rectifiers of the main generator excitation system and to the stator for the main generator. From these components, the water is returned to the storage tank through a deionizer. The storage tank receives make-up water from the demineralized water storage and transfer system.

5.170.3 Mode of Operation. The system operates during normal and emergency conditions. It does not operate during a LOCA.

5.170.4 Major Interfacing Systems

Main Generator System	TB
Main Generator Excitation System	TL
Demineralized Water Storage and Transfer System	KC
Nonessential Service Water System	KG

5.170.5 Major Equipment. The equipment for the main generator stator cooling system is supplied with the main turbine generator package.

Copyright The Institute of Electrical and Electronics Engineers, Inc.
Provided by IHS under license with IEEE
No reproduction or networking permitted without license from IHS
Not for Resale

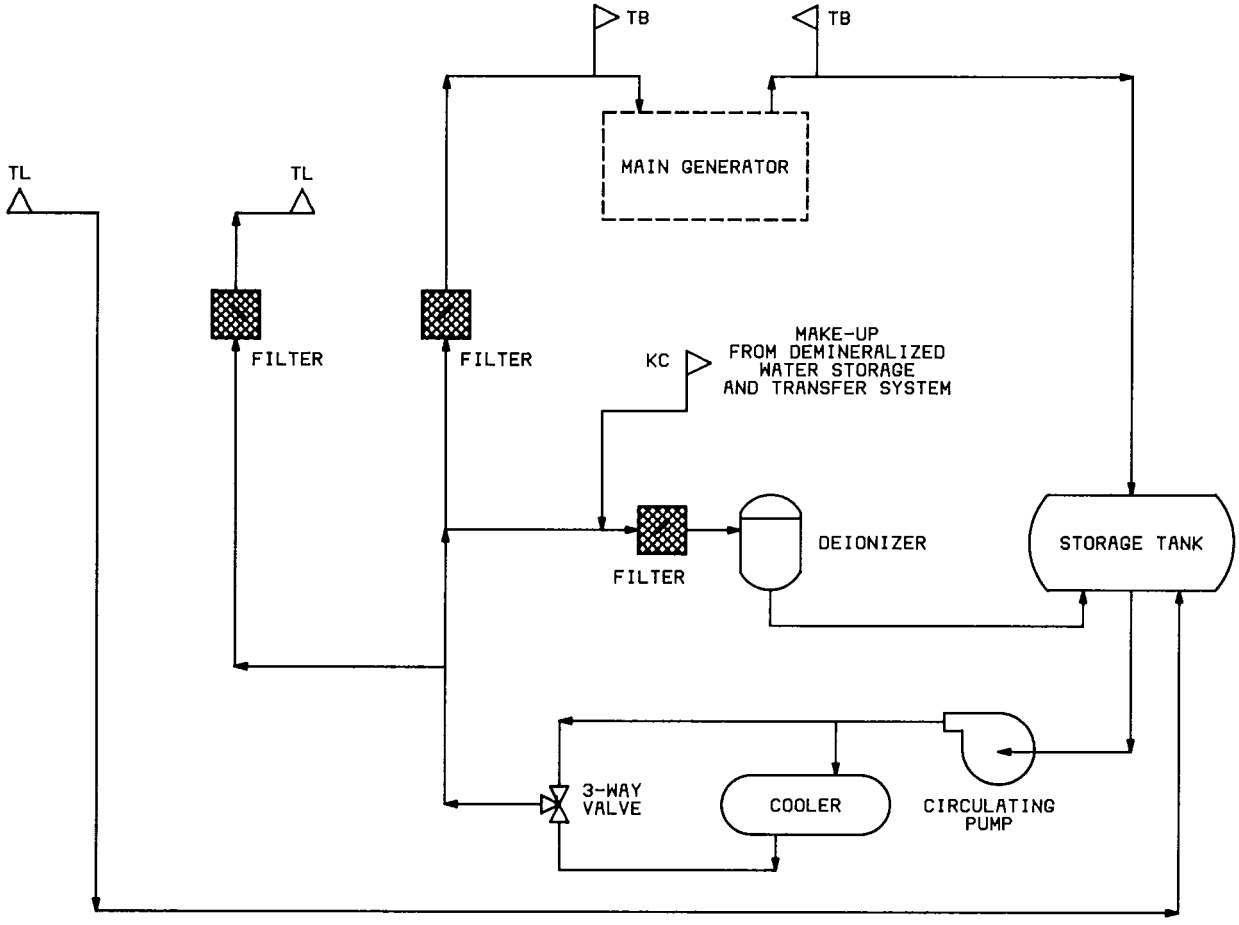

TL — Main Generator Excitation System
TB — Main Generation System
KC — Demineralized Water Storage and Transfer System

Fig 76
Main Generator Stator Cooling System — TJ

Copyright The Institute of Electrical and Electronics Engineers, Inc.
Provided by IHS under license with IEEE
No reproduction or networking permitted without license from IHS
Not for Resale

5.171 Main Generator Hydrogen Cooling System—TK

5.171.1 System Function. The main generator hydrogen cooling system circulates hydrogen gas through the main generator in order to keep the generator operating within acceptable temperature limits.

5.171.2 System Description. The system consists of fans, hydrogen cooler heat exchangers, piping, instrumentation and controls for proper functioning of the system. The system is wholly contained within the generator housing. Heat is rejected to the hydrogen gas by the generator parts as the hydrogen is circulated by fans attached to the generator shaft. The hydrogen is then passed through a hydrogen cooler heat exchanger.

5.171.3 Mode of Operation. The system operates during normal and emergency conditions. It does not operate during a LOCA.

5.171.4 Major Interfacing Systems

Main Generator System	TB
Hydrogen Supply System	LJ
Main Generator Gas Purge System	TH
Nonessential Service Water System	KG

5.171.5 Major Equipment. The equipment for the main generator hydrogen cooling system is supplied with the main turbine generator package.

Copyright The Institute of Electrical and Electronics Engineers, Inc.
Provided by IHS under license with IEEE
No reproduction or networking permitted without license from IHS

 Not for Resale

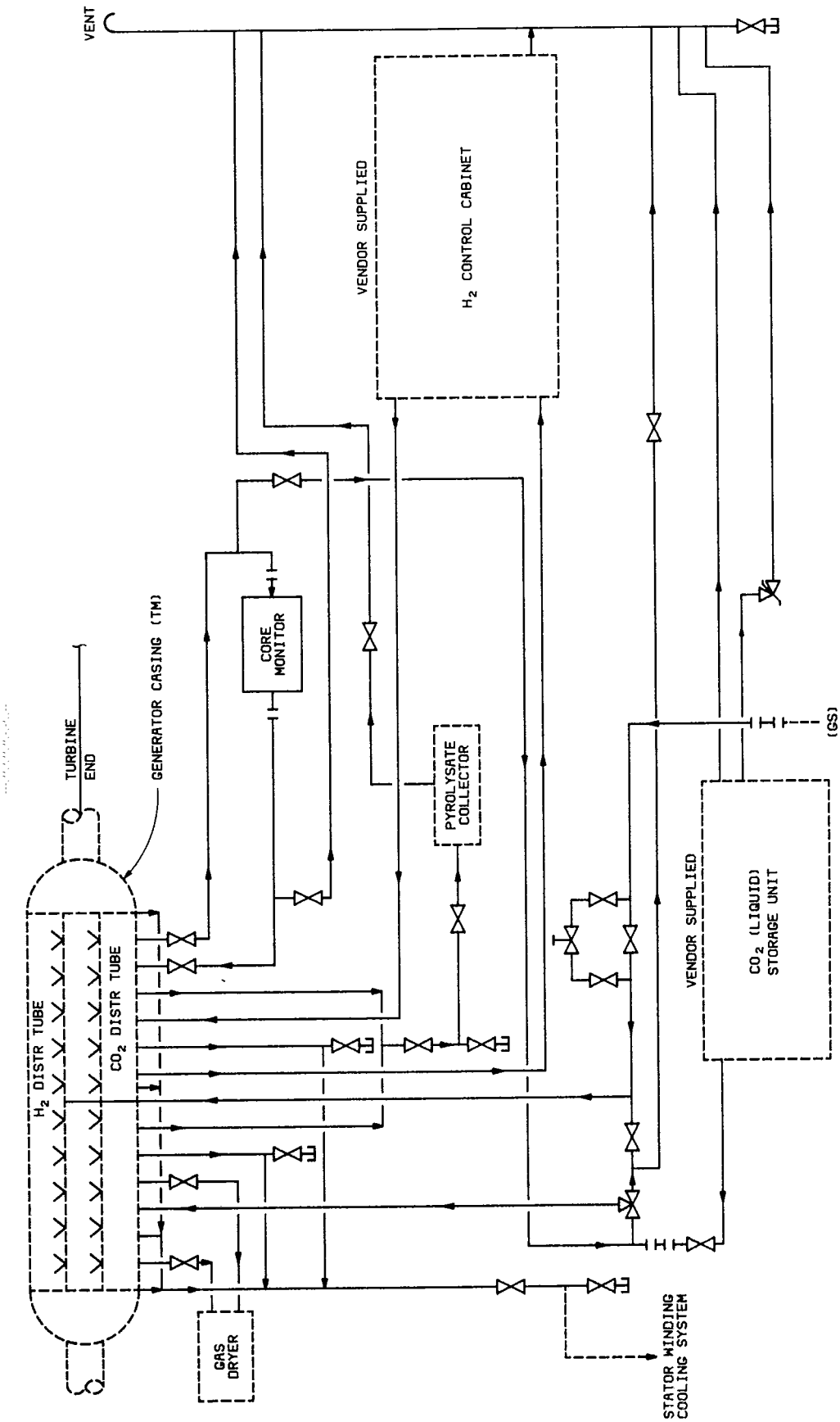

Fig 77
Main Generator Hydrogen Cooling System — TK

Copyright The Institute of Electrical and Electronics Engineers, Inc.
Provided by IHS under license with IEEE
No reproduction or networking permitted without license from IHS

Not for Resale

5.172 Main Generator Excitation System —TL

5.172.1 System Function. The main generator excitation system provides and regulates the strength of the magnetic field in the rotor of the main generator, thus controlling the unit's electrical output.

5.172.2 System Description. There are several various types of excitation systems. In general, an excitation system includes the basic components of an exciter, regulator, and manual control. The exciter provides the source of all or part of the field current for the excitation of the main generator. The regulator controls amount of current generation within the exciter in response to the load voltage and VAR requirements on the main generator. The manual control provides manual adjustment of the main generator output voltage.

5.172.3 Mode of Operation. The system operates during normal and emergency conditions. It does not operate during a LOCA.

5.172.4 Major Interfacing Systems

Main Generator System	TB
Main Turbine Instrumentation System	IT
Main Generator Stator Cooling System	TJ
Turbine Supervisory Control System	JJ
Turbine Building Closed Cooling Water System	KB

5.172.5 Major Equipment. The equipment for the main generator excitation system is supplied with the main turbine generator package.

Table 17

	Site Facility Environmental Control Systems Group	Plant Type	Revision
UA	Pumping Station Environmental Control System	B P	
UB	Water Treatment Building Environmental Control System	B P	
UC	Service Building Environmental Control System	B P	
UD	Administration Building Environmental Control System	B P	
UE	Security Building Environmental Control System	B P	
UF	Technical Support Center Environmental Control System	B P	
UG	Emergency Operations Facility Environmental Control System	B P	
UH	Visitors Center Environmental Control System	B P	

B—BWR P—PWR

5.173 Pumping Station Environmental Control System—UA

5.173.1 System Function. The pumping station environmental control system maintains the pumping station environment within acceptable limits by ventilating or heating the station as required.

5.173.2 System Description. The system typically consists of electric heaters, fans, ductwork, and instrumentation and controls as needed. The individual pumping stations are each served by a separate set of equipment and are considered subsystems of this system. These may include, for example, the ERCW pump station, the intake pump station, the heat rejection pump station, or any others.

5.173.3 Mode of Operation. The system operates during normal and emergency conditions.

5.173.4 Major Interfacing Systems

Low-Voltage Power System	EC
Low-Voltage Power System—Class 1E (for certain equipment)	ED

5.173.5 Major Equipment. See System Description.

5.174 Water Treatment Building Environmental Control System—UB

5.174.1 System Function. The water treatment building environmental control system maintains the building environment within acceptable limits by ventilating or heating the building as required.

5.174.2 System Description. A typical system consists of electric heaters, ventilation fans, ductwork, dampers, and controls and instrumentation as necessary.

Copyright The Institute of Electrical and Electronics Engineers, Inc.
Provided by IHS under license with IEEE
No reproduction or networking permitted without license from IHS
Not for Resale

5.174.3 Mode of Operation. The system operates during normal plant operating conditions, startup, and shutdown.

5.174.4 Major Interfacing Systems

Low-Voltage Power System EC

5.174.5 Major Equipment. See system description.

5.175 Service Building Environmental Control System—UC

5.175.1 System Function. The service building environmental control system provides cooling, heating, and ventilation of the service building in order to maintain the building environment within acceptable limits.

5.175.2 System Description. A typical system will contain exhaust fans, air conditioning units, air handling units, ductwork, piping, valves, dampers, and instrumentation and controls as required.

5.175.3 Mode of Operation. The system operates during normal, shutdown, and startup modes of plant operation.

5.175.4 Major Interfacing Systems

Low-Voltage Power System EC

5.175.5 Major Equipment. See system description.

5.176 Administration Building Environmental Control System—UD

5.176.1 System Function. The administration building environmental control system maintains the administration (office) building within acceptable limits by heating, cooling, and ventilating the building as required.

5.176.2 System Description. A typical system will contain air handling units, air conditioning units, variable air volume fans, piping, ductwork, dampers, and instrumentation and controls as required.

5.176.3 Mode of Operation. The system functions during normal, shutdown, and startup modes of plant operation.

5.176.4 Major Interfacing Systems

Low-Voltage Power System EC

5.176.5 Major Equipment. See system description.

5.177 Security Building Environmental Control System—UE

5.177.1 System Function. The security building environmental control system provides cooling, heating, and ventilation of the security building, in order to maintain the building within acceptable limits.

5.177.2 System Description. The system will typically consist of such equipment as supply fans, exhaust fans, a heat pump or air conditioning unit, and electric heaters, ductwork, and instrumentation and controls as required.

5.177.3 Mode of Operation. The system functions during normal, shutdown, and startup modes of plant operation.

5.177.4 Major Interfacing Systems

Low-Voltage Power System EC

5.177.5 Major Equipment. See system description.

5.178 Technical Support Center Environmental Control System—UF

5.178.1 System Function. The technical support center environmental control system provides heating, cooling, and ventilation for the technical support center.

5.178.2 System Description. The system is required to provide habitability to meet nuclear regulatory commission requirements and typically includes HEPA (high efficiency particulate air) and charcoal filters in addition to fans, air conditioning units, heaters, ductwork, and instrumentation and controls. The system is not considered safety-related since it is not required for safe shutdown of the plant.

5.178.3 Mode of Operation. The system operates during emergency, normal, shutdown, and startup modes of plant operation.

5.178.4 Major Interfacing Systems

Low-Voltage Power System EC

5.178.5 Major Equipment. See system description.

5.179 Emergency Operations Facility Environmental Control System—UG

5.179.1 System Function. The emergency operations facility environmental control system provides heating, cooling, and ventilation for the emergency operations facility.

5.179.2 System Description. The system is required to provide habitability to meet Nuclear Regulatory Commission requirements and typically includes HEPA (high efficiency particulate air) and charcoal filters in addition to fans, air conditioning units, heaters, ductwork, and instrumentation and controls. The system is not considered safety-related since it is not required for safe shutdown of the plant.

Copyright The Institute of Electrical and Electronics Engineers, Inc.
Provided by IHS under license with IEEE
No reproduction or networking permitted without license from IHS

Not for Resale

5.179.3 Mode of Operation. The system operates during emergency, normal, shutdown, and startup modes of plant operation.

5.179.4 Major Interfacing Systems

Low-Voltage Power System EC

5.179.5 Major Equipment. See System Description.

5.180 Visitors Center Environmental Control System—UH

5.180.1 System Function. The visitors center environmental control system provides cooling, heating, and ventilation of the visitors center so as to maintain the building environment within acceptable limits.

5.180.2 System Description. A typical system consists primarily of fans, electric heaters, dampers, sensors, and instrumentation and controls which operate as required to keep the visitors center environment within acceptable limits.

5.180.3 Mode of Operation. The system operates as required, but principally during normal plant operation.

5.180.4 Major Interfacing Systems

Low-Voltage Power System EC

5.180.5 Major Equipment. See system description.

Table 18

	Power Generation Buildings Environmental Control Systems Group	Plant Type	Revision
VA	Reactor Building Environmental Control System	B P	
VB	Drywell Environmental Control System (BWR)	B P	
VC	Shield Annulus Return and Exhaust System	B P	
VE	Access Corridors Environmental Control System	B P	
VF	Auxiliary Building Environmental Control System	B P	
VG	Fuel Building Environmental Control System	B P	
VH	Radwaste Building Environmental Control System	B P	
VI	Control Building/Control Complex Environmental Control System	B P	
VJ	Emergency Onsite Power Supply Building Environmental Control System	B P	
VK	Turbine Building Environmental Control System	B P	
VL	Plant Exhaust System	B P	

B—BWR P—PWR

5.181 Reactor Building Environmental Control System—VA

5.181.1 System Function. The reactor building environmental control system maintains the quality of the reactor building environment within acceptable limits.

5.181.2 System Description. This system at a typical plant will contain air handling units for cooling the reactor building during operation and purging equipment for use prior to personnel entry into the containment. The purging equipment typically consists of supply fans, ductwork, heating and cooling coils, instrumentation and controls, and air cleanup units.

5.181.3 Mode of Operation. The system operates during normal, shutdown, startup, and in some instances, emergency plant operational modes.

5.181.4 Major Interfacing Systems

Emergency/Standby Gas Treatment System BH
Essential Service Water System BI
Plant Hot Water System LV
Low-Voltage Power System EC
Low-Voltage Power System—Class 1E ED

5.181.5 Major Equipment. See system description.

5.182 Drywell Environmental Control System (BWR)—VB

5.182.1 System Function. The drywell environmental control system provides cooling for the drywell of the reactor building of BWR plants.

5.182.2 System Description. This system

Copyright The Institute of Electrical and Electronics Engineers, Inc.
Provided by IHS under license with IEEE
No reproduction or networking permitted without license from IHS

Not for Resale

usually will principally consist of fan coil units (air handling units) cooled by service water and/or chilled water. It circulates air within the drywell to maintain the desired ambient conditions.

5.182.3 Mode of Operation. The system operates during emergency and normal plant operational modes.

5.182.4 Major Interfacing Systems

Essential Service Water System	BI
Emergency/Standby Gas Treatment System	BH
Low Voltage Power System—Class 1E	ED
Chilled Water System	KM

5.182.5 Major Equipment. See system description.

5.183 Shield Annulus Return and Exhaust System—VC

5.183.1 System Function. The shield annulus return and exhaust system maintains a negative pressure relative to atmospheric pressure between the reactor containment and the shield building (secondary containment) so that any leakage through the containment shield building is into this space.

5.183.2 System Description. The system consists typically of exhaust fans, a differential pressure controller, and other instrumentation, valves, and controls as necessary.

5.183.3 Mode of Operation. The system operates during normal and emergency plant operational modes.

5.183.4 Major Interfacing Systems

Low-Voltage Power System—Class 1E	ED
Emergency/Standby Gas Treatment System	BH

5.183.5 Major Equipment. See system description.

5.184 Access Corridors Environmental Control System—VE

5.184.1 System Function. The access corridors environmental control system heats and ventilates the plant access corridors as required to maintain the environment of the corridors within acceptable limits.

5.184.2 System Description. This system typically consists of electric heaters, fans, ductwork, and dampers, along with the necessary instrumentation and controls in those areas where required.

5.184.3 Mode of Operation. This system operates during normal startup and shutdown modes of plant operation as required.

5.184.4 Major Interfacing Systems

Low-Voltage Power System	EC

5.184.5 Major Equipment. See system description.

5.185 Auxiliary Building Environmental Control System—VF

5.185.1 System Function. The auxiliary building environmental control system provides heating, cooling, ventilation, and pressure control for the reactor auxiliary building. The system also provides smoke removal and exhaust as required.

5.185.2 System Description. A typical system will consist primarily of intake filter-heating-cooling units, air cleanup units, air conditioning and air handling units, and exhaust fans, along with the required ductwork, dampers, and instrumentation and controls. A typical system may also have a dedicated water chiller package and the associated piping.

5.185.3 Mode of Operation. This system functions during normal, emergency, startup, and shutdown plant operational modes.

5.185.4 Major Interfacing Systems

Plant Hot Water System	LV
Plant Exhaust System	VL
Essential Service Water System	BI
Low-Voltage Power System—Class 1E	ED
Low-Voltage Power System	EC
Chilled Water System	KM
Emergency/Standby Gas Treatment System	BH

5.185.5 Major Equipment. See system description.

5.186 Fuel Building Environmental Control System—VG

5.186.1 System Function. The fuel building environmental control system provides heating, cooling, ventilation, and pressure control for the fuel building.

5.186.2 System Description. There are usually several subsystems for this system. Included must be a means for cleanup of exhaust air during spent fuel handling operations and during a fuel handling accident (if such should occur). Some subsystems include provisions for exhaust to the emergency/standby gas treatment system. In others there is a separate

Copyright The Institute of Electrical and Electronics Engineers, Inc.
Provided by IHS under license with IEEE
No reproduction or networking permitted without license from IHS
Not for Resale

subsystem—fuel building emergency/standby gas treatment subsystem. In either case the treatment or cleanup consists of routing the exhaust air through a filter-train of HEPA and charcoal filters prior to its release to the outside atmosphere.

5.186.3 Mode of Operation. The system functions during normal, emergency, shutdown, and startup plant operational modes.

5.186.4 Major Interfacing Systems

Essential Service Water System	BI
Low-Voltage Power System—Class 1E	ED
Low-Voltage Power System	EC
Emergency/Standby Gas Treatment System	BH
Cask Decontamination System	WA

5.186.5 Major Equipment. Typical system equipment includes:

Air-conditioning Units
Air-handling Units
Exhaust and Supply Fans
HEPA Filters
Ductwork
Heaters
Air Cleanup Units

5.187 Radwaste Building Environmental Control System—VH

5.187.1 System Function. The radwaste building environmental control system provides the air for ventilation, heated or cooled as necessary, for the several rooms and areas of the radwaste building. Air is exhausted as required to the plant stack.

5.187.2 System Description. A typical system contains such equipment as intake filter heating-cooling units, supply fans, exhaust fans, air-handling units, and air-conditioning units, along with the necessary ductwork, instrumentation and controls.

Provision is made in the system so that any areas with airborne radiation can have their exhaust air routed through a filter train prior to release to the vent stack.

5.187.3 Mode of Operation. The system functions during normal, startup, and shutdown modes of plant operation.

5.187.4 Major Interfacing Systems

Low-Voltage Power System	EC
Nonessential Service Water System	KG
Plant Exhaust System	VL

5.187.5 Major Equipment. See system description.

5.188 Control Building/Control Complex Environmental Control System—VI

5.188.1 System Function. The control building/control complex environmental control system provides heating, cooling, ventilation, pressure control, and smoke removal for the central control complex.

5.188.2 System Description. This is a safety-related system and, as such, dual trains of essential equipment are provided with each powered by a separate division of Class 1E electrical power. Only one train is required to operate at a time. There are two separate sources of fresh air for the system with either source available to either train. The system typically includes such equipment as supply and exhaust fans, intake filter-heating-cooling units, humidifiers, air handling and air conditioning units, electric heaters, and air cleanup units with HEPA and charcoal filters, along with the necessary ductwork, instrumentation and controls.

5.188.3 Mode of Operation. The system functions during normal, emergency, shutdown, and startup modes of plant operation.

5.188.4 Major Interfacing Systems

Plant Hot Water System	LV
Chilled Water System	KM
Low Voltage Power System—Class 1E	ED
Low Voltage Power System	EC
Essential Service Water System	BI
Demineralized Water Storage and Transfer System	KC

5.188.5 Major Equipment. See System Description.

5.189 Emergency Onsite Power Supply Building Environmental Control System —VJ

5.189.1 System Function. The emergency onsite power supply building environmental control system provides heating, cooling, and ventilation for the emergency onsite power supply building.

5.189.2 System Description. This safety related system keeps the temperature in the building within safe limits and provides the required air change. Exhaust fans provide cooling and ventilation within the building, and electric heaters provide heating capability.

The system primarily consists of exhaust fans, dampers, electric heaters, filters, ductwork, and instrumentation and controls necessary for operation of the system.

Copyright The Institute of Electrical and Electronics Engineers, Inc.
Provided by IHS under license with IEEE
No reproduction or networking permitted without license from IHS

Not for Resale

5.189.3 Mode of Operation. The system operates during emergency conditions.

5.189.4 Major Interfacing Systems

Low-Voltage Power System	EC
Low-Voltage Power System—Class 1E	ED

5.189.5 Major Equipment. See system description.

5.190 Turbine Building Environmental Control System—VK

5.190.1 System Function. The turbine building environmental control system serves to maintain the ambient temperature in the turbine building at design conditions and to provide ventilation air for the building.

5.190.2 System Description. The system typically consists of air handling units, supply and exhaust fans, electric heaters, and the necessary ductwork, instrumentation, and controls.

5.190.3 Mode of Operation. The system operates during normal, shutdown, and startup modes of plant operation.

5.190.4 Major Interfacing Systems

Plant Hot Water System	LV
Low-Voltage Power System	EC
Nonessential Service Water System	KG
Auxiliary Steam System	SA

5.190.5 Major Equipment. See system description.

5.191 Plant Exhaust System—VL

5.191.1 System Function. The plant exhaust system collects ventilation exhausts from various buildings and vents those exhausts through a common vent stack to the atmosphere.

5.191.2 System Description. This system is typically comprised of ductwork and a centrally located vent stack. Various exhausts are collected by the ductwork and routed to the vent stack.

5.191.3 Mode of Operation. This system operates in a passive nature during all modes of plant operation.

5.191.4 Major Interfacing Systems

Auxiliary Building Environmental Control System	VF
Radwaste Building Environmental Control System	VH
Gaseous Waste Management System (PWR)	WE
Offgas System (BWR)	WF

5.191.5 Major Equipment. See System Description.

Table 19

	Waste Management Systems Group	Plant Type		Revision
WA	Cask Decontamination System	B	P	
WB	Solid Waste Management System	B	P	
WD	Liquid Waste Management System	B	P	
WE	Gaseous Waste Management System (PWR)		P	
WF	Offgas System (BWR)	B		
WG	Sanitary Waste Processing System	B	P	
WH	Wastewater Disposal System	B	P	
WI	Steam Generator Blowdown System (PWR)		P	
WJ	Sludge Waste Dewatering System	B	P	
WK	Equipment and Floor Drain System	B	P	

B—BWR P—PWR

Copyright The Institute of Electrical and Electronics Engineers, Inc.
Provided by IHS under license with IEEE
No reproduction or networking permitted without license from IHS

Not for Resale

5.192 Cask Decontamination System—WA

5.192.1 System Function. The cask decontamination system decontaminates the spent fuel shipping cask so it can be shipped safely.

5.192.2 System Description. The cask decontamination system uses remote and manual cleaning to thoroughly clean a spent fuel shipping cask. Remote cleaning is performed by spray nozzle banks which supplies high-pressure water by a hydro-laser pump. A hand-held spray lance is also provided for spot manual cleaning. Water drained from the cask decontamination pit flows to a holding tank, where the water can either be recycled to the spray equipment or pumped to the liquid waste management system for treatment.

5.192.3 Mode of Operation. The cask decontamination system is in use whenever necessary to decontaminate a spent fuel shipping cask.

5.192.4 Major Interfacing Systems

Liquid Waste Management System	WD
Demineralized Water Storage and Transfer System	KC
Fuel Building Environmental Control System	VG

5.192.5 Major Equipment

Decontamination Holding Tank
Booster Pump
Transfer Pump
Hydro-Laser Pump
Spray Nozzles
Spray Lance

Copyright The Institute of Electrical and Electronics Engineers, Inc.
Provided by IHS under license with IEEE
No reproduction or networking permitted without license from IHS
Not for Resale

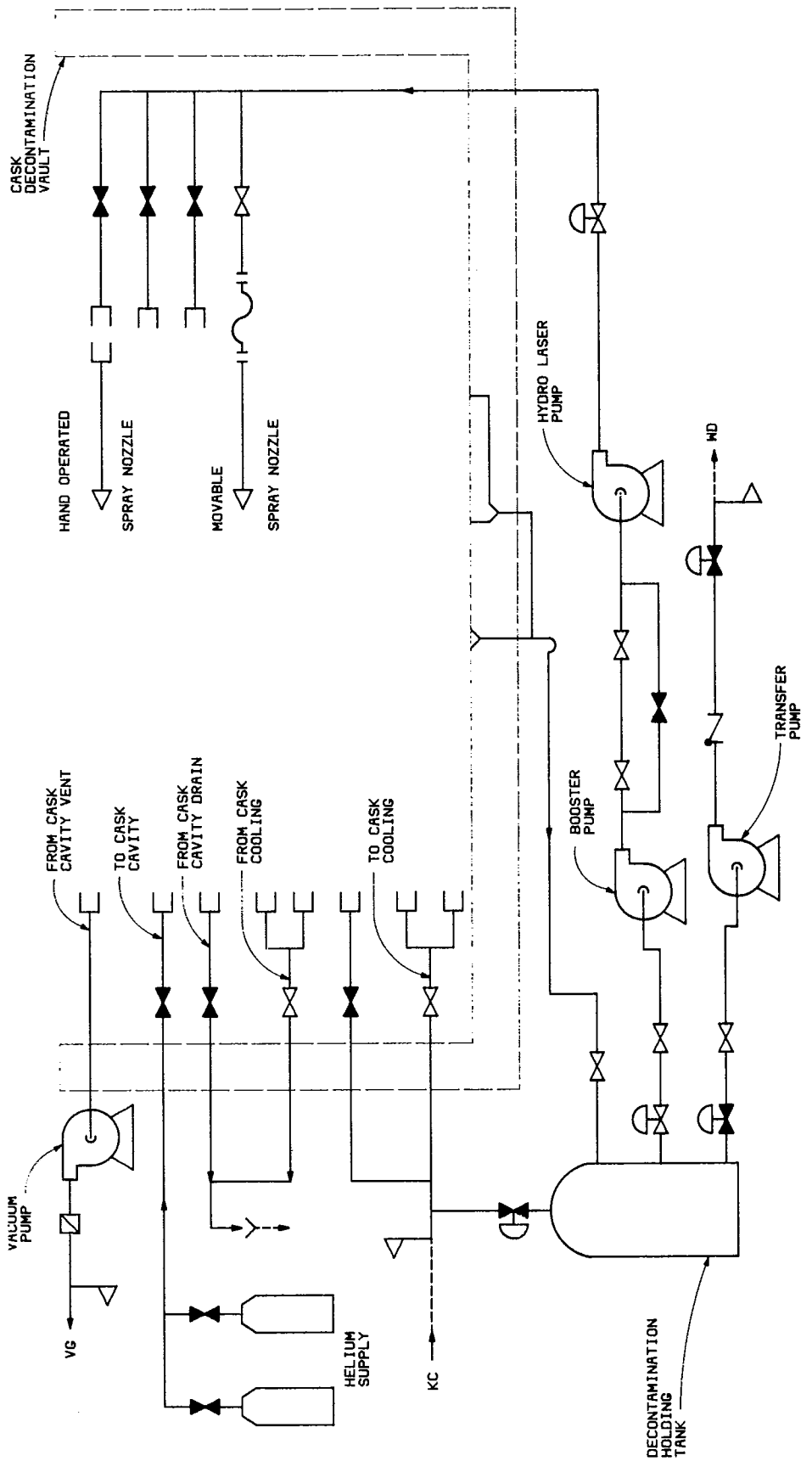

Fig 78
Cask Decontamination System — WA

KC — Demineralized Water Storage and Transfer-System
VG — Fuel Building Environmental Control System
WD — Liquid Waste Management System

Copyright The Institute of Electrical and Electronics Engineers, Inc.
Provided by IHS under license with IEEE
No reproduction or networking permitted without license from IHS

Not for Resale

5.193 Solid Waste Management System—WB

5.193.1 System Function. The solid waste management system collects, processes, and packages radioactive solid wastes for off-site disposal.

5.193.2 System Description. A typical solid waste management system receives the following types of radioactive solid wastes, dewaters them as necessary, and solidifies and packages them in accordance with applicable regulations for transportation for off-site burial.

(1) Evaporator bottoms
(2) Spent resins
(3) Spent filter cartridges
(4) Phase separator wastes

These wastes are typically solidified with one of the following agents: cement, cement/sodium silicate, polymer, or bitumen. The waste and solidification agent are placed in a disposable container. The container is then sealed and transferred to temporary storage to await shipment.

The system also receives, stores, and packages low activity, dry solid wastes such as contaminated rags, clothing, tools, air filters, laboratory waste, etc. These wastes are typically compacted into a disposable 55 gal drum.

5.193.3 Mode of Operation. The solid waste management system is in use on an as-needed basis during all plant operating modes.

5.193.4 Major Interfacing Systems

Condensate Demineralizer System	SF
Fuel Pool Cooling and Purification System	DA
Chemical and Volume Control/Makeup and Purification System (PWR)	CB
Liquid Waste Management System	WD
Service Air System	LF
Condensate Storage and Transfer System	KA
Reactor Water Cleanup System (BWR)	CE
Suppression Pool Purification System (BWR)	CG

5.193.5 Major Equipment

Spent Resin Tanks
Concentrated Waste Tanks
Solidification Agent Storage Tanks
Dry Waste Compactor
Pumps
Filters
Mixing-Filling Machine
Container Handling Equipment

5.194 Liquid Waste Management System —WD

5.194.1 System Function. The liquid waste management system collects and processes liquid radioactive wastes to remove radioactivity and other impurities so that the water can either be recycled for plant use or discharged to the environment in accordance with applicable regulations.

5.194.2 System Description. A typical liquid waste management system is divided into subsystems according to the quality of the water to be processed. Typical subsystems are described below.

Recycle Subsystem. This subsystem collects effluents which can normally be recycled after treatment. These effluents typically include equipment leaks and drains, valve leakoffs, pump seal leakoffs, flushing water, resin decant water, etc. These effluents are collected in waste holdup tanks and are processed through filters, evaporators, and demineralizers, as appropriate.

Nonrecycle Subsystem. This subsystem collects effluents which are normally discharged after appropriate treatment to meet applicable discharge regulations. This subsystem typically processes the following waste effluents which typically are segregated according to the type of waste processing necessary.

(1) Laundry and hot shower waste
(2) Chemical waste
(3) Building floor drains

These effluents are collected in waste holdup tanks, are neutralized as appropriate, and are processed through oil separators, filters, evaporators, and demineralizers, as appropriate. After processing, they are collected in a waste monitor tank, sampled for release requirements, and discharged to the wastewater disposal system.

1.194.3 Mode of Operation. The liquid waste management system is in use during all plant operating modes.

1.194.4 Major Interfacing Systems

Closed/Component Cooling Water System	CC
Wastewater Disposal System	WH
Equipment and Floor Drains System	WK
Chemical and Volume Control/Makeup and Purification System (PWR)	CB
Auxiliary Steam System	SA
Solid Waste Management System	WB
Cask Decontamination System	WA

Copyright The Institute of Electrical and Electronics Engineers, Inc.
Provided by IHS under license with IEEE
No reproduction or networking permitted without license from IHS
Not for Resale

Gaseous Waste Management System (PWR)	WE
Sampling and Water Quality System	KN
Condensate Demineralizer System	SF
Condensate Storage and Transfer System	KA
Reactor Water Cleanup System (BWR)	CE
Service Air System	LF
Fuel Pool Cooling and Purification System	DA
Nitrogen Supply System	LK

5.194.5 Major Equipment

Holdup, Storage, Neutralization, and Monitor Tanks
Pumps
Evaporator Packages
Filters
Oil Separators
Demineralizers

Copyright The Institute of Electrical and Electronics Engineers, Inc.
Provided by IHS under license with IEEE
No reproduction or networking permitted without license from IHS

Not for Resale

5.195 Gaseous Waste Management System (PWR)—WE

5.195.1 System Function. The gaseous waste management system (PWR) provides for the holdup and decay of radioactive gases in order to meet radioactivity release limits at the site boundary.

5.195.2 System Description. A typical gaseous waste management system (PWR) receives the majority of the gaseous waste to be processed from the volume control tank in the chemical and volume control/makeup and purification system (PWR), and the gas stripper package and reactor drain tank in the Boron recycle system (PWR). The gaseous waste stream consists of hydrogen, nitrogen, water vapor, and fission product gases. The gas stream is typically processed through moisture separators and dessicant dryers prior to delivery to the holdup portion of the system. Holdup for radioactive decay may be performed by any of the following means.

(1) Ambient charcoal.
(2) Refrigerated charcoal.
(3) Cryogenic adsorption.
(4) Gas decay tanks.
(5) Cryogenic distillation.

Following the appropriate holdup time for radioactive decay, the gaseous waste is released to the environment via the Plant Exhaust System.

5.195.3 Mode of Operation. The gaseous waste management system (PWR) is in use during startup, normal operation, cooldown, and primary coolant degassing operations.

5.195.4 Major Interfacing Systems

Boron Recycle System (PWR)	CA
Chemical and Volume Control/Makeup and Purification System (PWR)	CB
Plant Exhaust System	VL
Nitrogen Supply System	LK
Liquid Waste Management System	WD

5.195.5 Major Equipment (Typical)

Waste Gas Compressors
Waste Gas Storage Tanks
Gas Collector Tank
Moisture Separators
Dessicant Dryers
Charcoal Delay Beds
Filters
Glycol Cooling Package

Copyright The Institute of Electrical and Electronics Engineers, Inc.
Provided by IHS under license with IEEE
No reproduction or networking permitted without license from IHS

Not for Resale

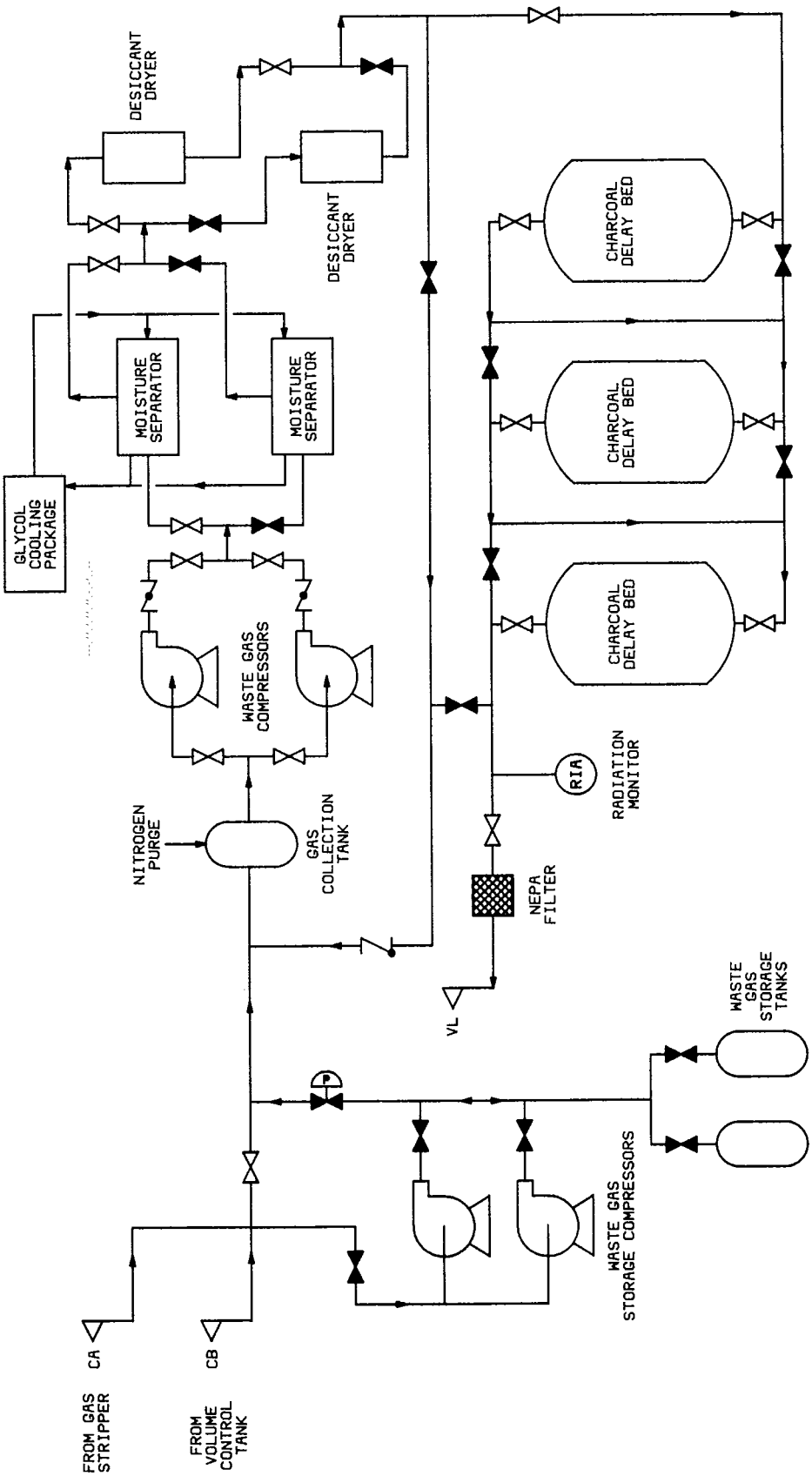

Fig 79
Gaseous Waste Management System (PWR) WE

CA — Boron Recycle System (PWR)
CB — Chemical and Volume Control/Makeup and Purification System (PWR)
VL — Plant Exhaust System

Copyright The Institute of Electrical and Electronics Engineers, Inc.
Provided by IHS under license with IEEE
No reproduction or networking permitted without license from IHS

Not for Resale

5.196 Offgas System (BWR)—WF

5.196.1 System Function. The offgas system (BWR) controls the release of radioactivity to the environment by delaying and filtering the offgas from the main condenser.

5.196.2 System Description. The offgas stream consists of air inleakage to the main condenser, hydrogen, and oxygen produced by radiolytic decomposition of reactor water, activation gases, and fission product gases. These gases are removed from the main condenser by the condenser vacuum system. The offgas system (BWR) recombines the hydrogen gas present in the offgas stream and provides holdup and filtration to allow decay of the radioactivity in the offgas stream prior to release to the environment by way of the plant exhaust system. Charcoal adsorber beds are typically used to provide sufficient holdup time for radioactive decay. Dessicant dryers are provided for a high degree of moisture removal from the process stream to improve charcoal adsorber performance. Regenerators are provided for regeneration of the dessicant dryer beds. Gas coolers reduce the temperature of the process stream prior to the charcoal adsorbers to increase adsorber holdup time. A glycol refrigeration package provides cooling for the system coolers.

5.196.3 Mode of Operation. The offgas system (BWR) is in use during startup, normal operation and cooldown.

5.196.4 Major Interfacing Systems

Condenser Vacuum System	SH
Main/Reheat Steam System	SB
Condensate System	SD
Plant Exhaust System	VL
Condenser System	SG

5.196.5 Major Equipment

Preheaters
Hydrogen Recombiners
Offgas Condenser
Water Separator
Coolers
Dessicant Dryers
Regenerators
Charcoal Adsorber Beds
Glycol Cooling Package

Copyright The Institute of Electrical and Electronics Engineers, Inc.
Provided by IHS under license with IEEE
No reproduction or networking permitted without license from IHS
Not for Resale

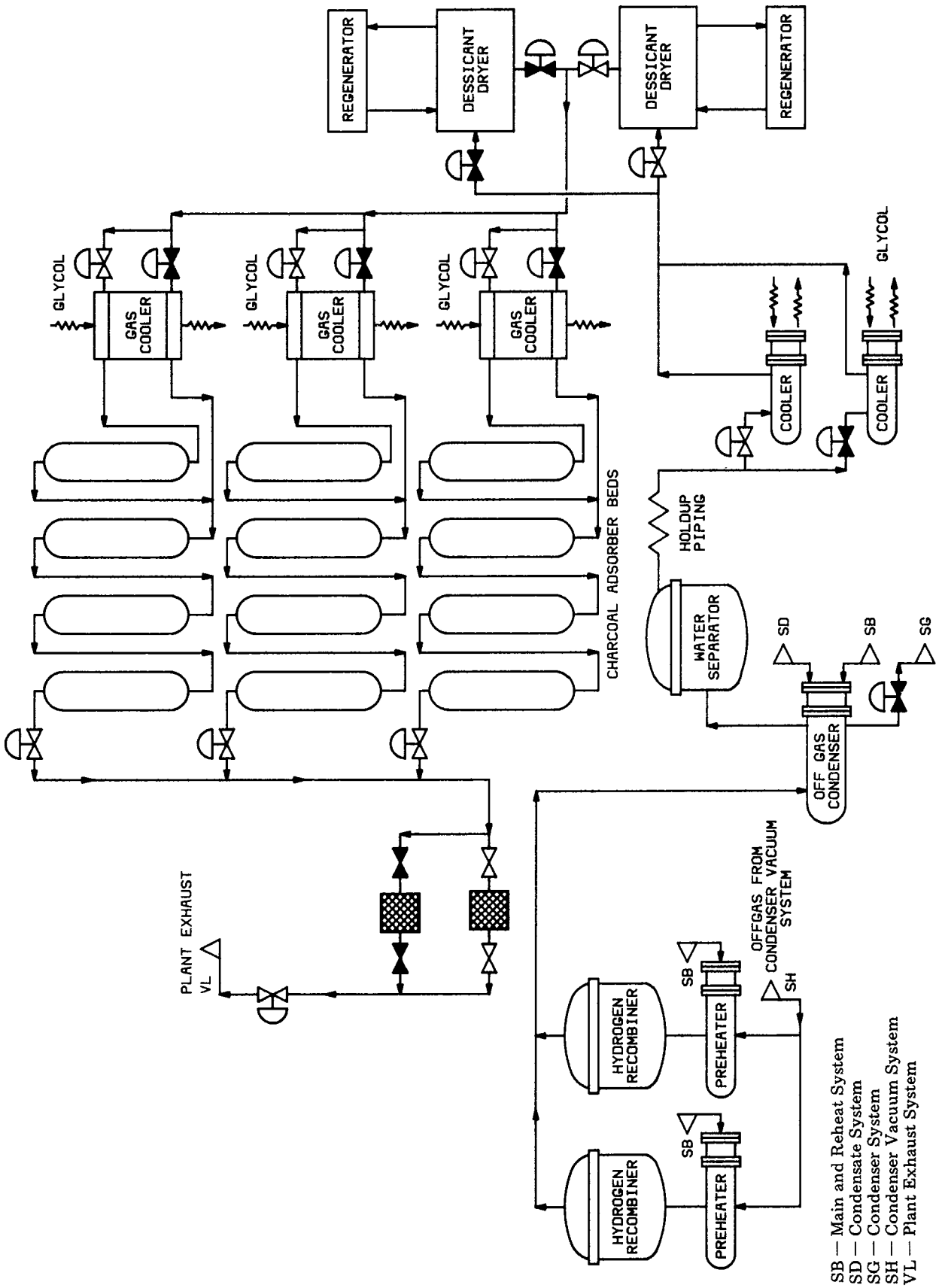

Fig 80
Offgas System (BWR) — WF

Copyright The Institute of Electrical and Electronics Engineers, Inc.
Provided by IHS under license with IEEE
No reproduction or networking permitted without license from IHS

Not for Resale

5.197 Sanitary Waste Processing System —WG

5.197.1 System Function. The sanitary waste processing system collects and treats plant sanitary waste.

5.197.2 System Description. A typical sanitary waste processing system collects and grinds sanitary waste from plant buildings and stores it in a septic tank. The waste then flows through a settling tank, a dosing tank, sand filters, and a chlorine contact tank. Chlorine or sodium hypochlorite is used to kill germs and microorganisms in the waste stream prior to discharge to the wastewater disposal system.

5.197.3 Mode of Operation. The sanitary waste processing system is in use during all plant operating conditions.

5.197.4 Major Interfacing System

Wastewater Disposal System WH

5.197.5 Major Equipment

Sewage Grinding Pumps
Sewage Lift Stations
Sand Filters
Septic Tank
Settling Tank
Sand Filter Dosing Tank
Chlorine Contact Tank

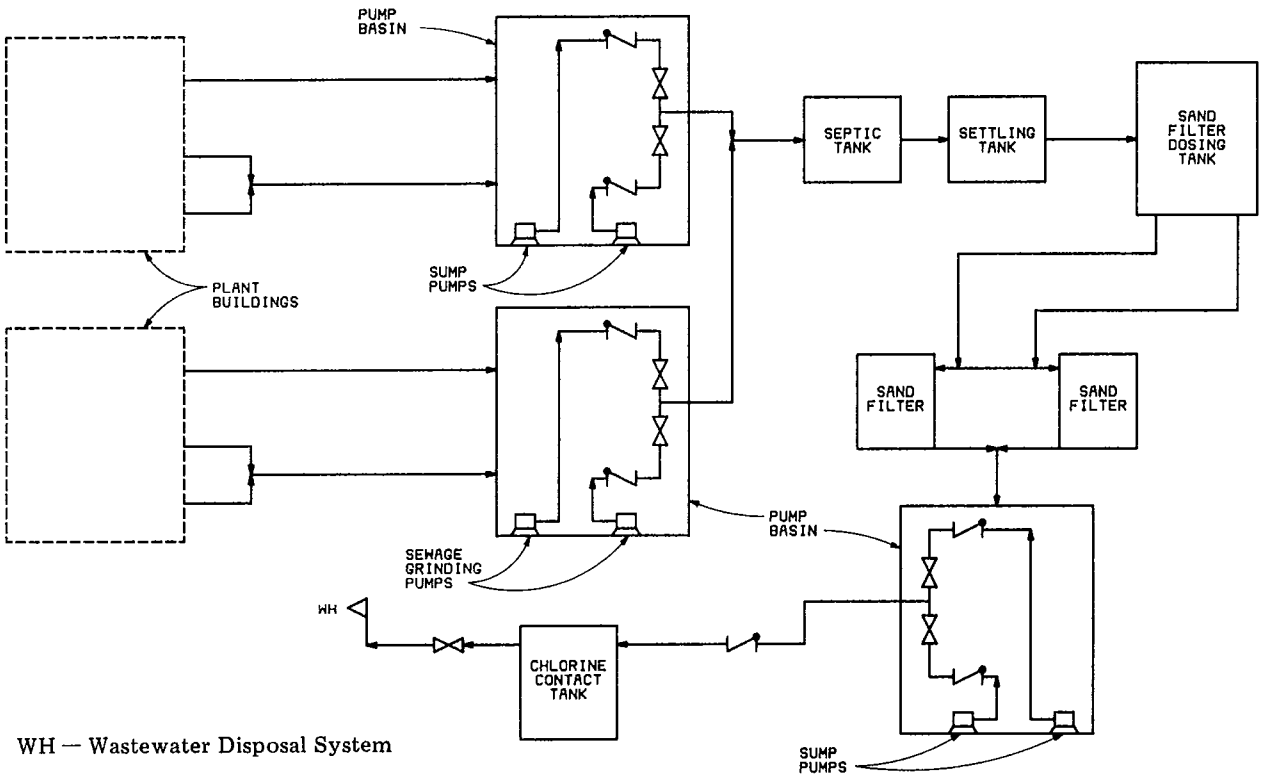

Fig 81
Sanitary Waste Processing System — WG

Copyright The Institute of Electrical and Electronics Engineers, Inc.
Provided by IHS under license with IEEE
No reproduction or networking permitted without license from IHS
Not for Resale

5.198 Wastewater Disposal System—WH

5.198.1 System Function. The wastewater disposal system provides final treatment and disposal of plant wastewater.

5.198.2 System Description. A typical wastewater disposal system receives wastewater effluents for final treatment and disposal from all the various plant systems which collect and/or treat wastewater.

A wastewater holding pond may be provided for plants with cooling towers to allow for settling of suspended solids, waste equalization, dissipation of waste heat, and reduction of any free chlorine prior to discharge to the environment. A sludge holding basin and waste neutralization basin are generally used to provide treatment necessary to meet plant discharge water quality requirements. An evaporation basin may be used to permanently retain wastes, such as chemical cleaning wastes, which do not meet applicable discharge requirements and for which treatment is impractical.

5.198.3 Mode of Operation. The wastewater disposal system is in use during all plant operating modes.

5.198.4 Major Interfacing Systems

Sanitary Waste Processing System	WH
Liquid Waste Management System	WD
Equipment and Floor Drains System	WK
Water Filtration System	KH
Heat Rejection System	KE
Makeup Demineralizer System	KJ

5.198.5 Major Equipment. None.

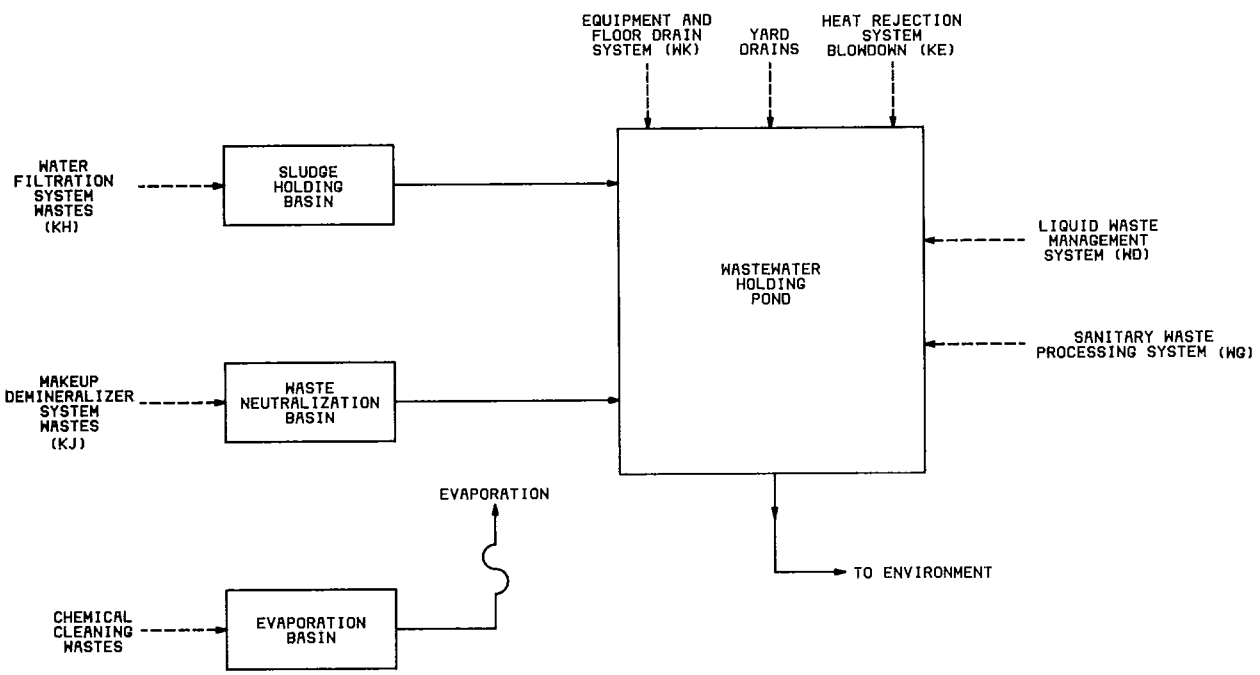

KE — Heat Rejection System
KH — Water Filtration System
KJ — Make Up Demineralizer System
WD — Liquid Waste Management System
WG — Sanitary Waste Processing System
WK — Equipment and Floor Drains System

Fig 82
Wastewater Disposal System — WH

Copyright The Institute of Electrical and Electronics Engineers, Inc.
Provided by IHS under license with IEEE
No reproduction or networking permitted without license from IHS

Not for Resale

5.199 Steam Generator Blowdown System (PWR)—WI

5.199.1 System Function. The steam generator blowdown system (PWR) is used to control secondary side water chemistry in recirculation-type steam generators.

5.199.2 System Description. A typical steam generator blowdown system (PWR) provides continuous and/or intermittent blowdown during normal operation to maintain the amount of dissolved and suspended impurities in the steam generator water within the required limits. The blowdown water is cooled by a flash tank or heat exchanger, or both, and is filtered and demineralized for recycle to the condensate and feedwater flow stream. Demineralization of the blowdown water is provided by either a set of dedicated system demineralizers or by the condensate demineralizer system.

During steam generator wet-layup conditions, the steam generator blowdown system (PWR) may also provide a capability for recirculation within each steam generator, transfer of water between steam generators, and draining and filling of the steam generators.

5.199.3 Mode of Operation. The steam generator blowdown system is in use during startup, shutdown, and normal operation.

5.199.4 Major Interfacing Systems

Closed/Component Cooling Water System	CC
Reactor Coolant System (PWR)	AB
Condensate System	SD
Condenser System	SG
Leak Monitoring System	IJ
Gland Seal Water Supply System	KO
Nitrogen Supply System	LK

5.199.5 Major Equipment

Blowdown Flash Tank
Flash Tank Pumps
Demineralizers
Blowdown Heat Exchanger
Gland Seal Water Supply System
Nitrogen Supply System

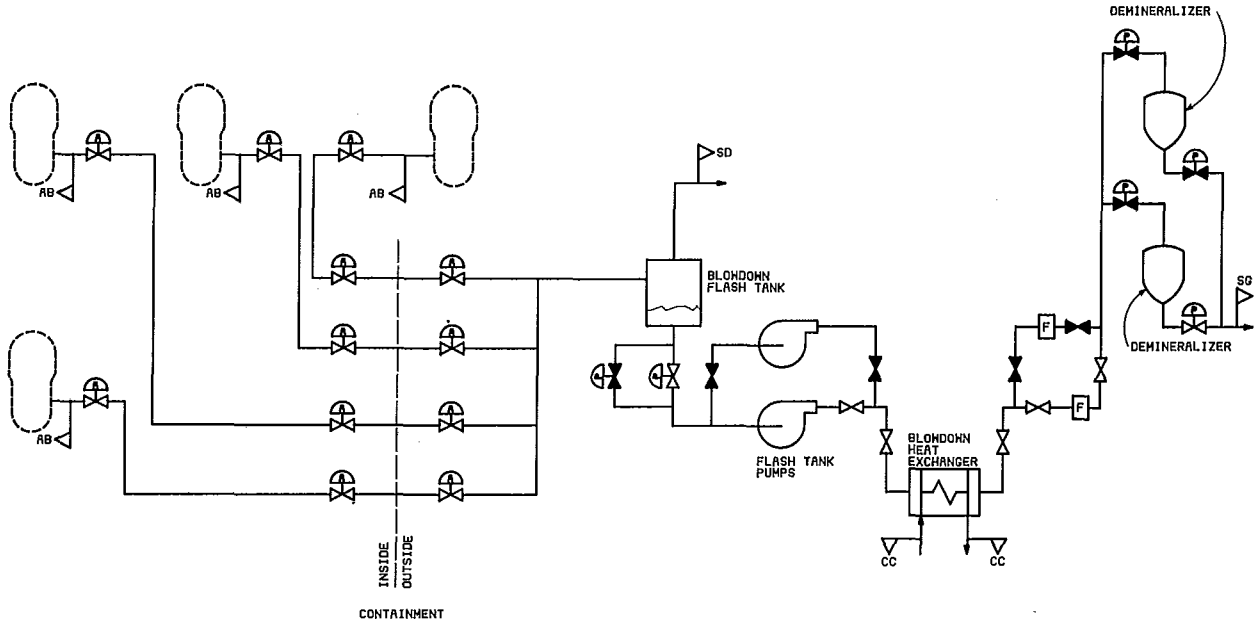

AB — Reactor Coolant System (PWR)
CC — Closed Component Cooling Water System
SD — Condensate System
SG — Condenser System

Fig 83
Steam Generator Blowdown System (PWR) — WI

Copyright The Institute of Electrical and Electronics Engineers, Inc.
Provided by IHS under license with IEEE
No reproduction or networking permitted without license from IHS

Not for Resale

5.200 Sludge Waste Dewatering System—WJ

5.200.1 System Function. The sludge waste dewatering system dewaters solid and sludge wastes for disposal at a landfill.

5.200.2 System Description. A typical system receives coagulant, softening, and filter backwash wastes from the water filtration system. The system dewaters these wastes to produce a solid waste product which can be disposed of in a landfill. The sludge waste dewatering system typically consists of sludge treatment sumps or tanks, feed equipment, filter press or vacuum filters, pumps, valves, and associated instrumentation and controls.

5.200.3 Mode of Operation. The sludge waste dewatering system is in use during all plant operating modes.

5.200.4 Major Interfacing Systems

Water Filtration System	KH

5.200.5 Major Equipment

Filter Press
Vacuum Filters
Tanks
Pumps

5.201 Equipment and Floor Drains System —WK

5.201.1 System Function. The equipment and floor drains system (EFD) collects liquid wastes from equipment and floor drains throughout the plant and transports them to other systems for further processing and/or disposal.

5.201.2 System Description. The EFD consists of sump pumps, sump coolers, and associated piping, valves and instrumentation. The EFD collects liquid wastes in various buildings and equipment drain sumps located throughout the plant. A typical EFD consists of separate drainage subsystems, according to the type of liquid waste which is collected. These subsystems are as follows:

Radioactive Liquid Waste Subsystem. This subsystem collects low conductivity radioactive liquid drains, high conductivity radioactive liquid drains, and detergent drains. These are pumped to the appropriate portion of the Liquid Waste Management System for further processing. Sump coolers, served by the closed/component cooling water system, are provided where necessary to cool the waste.

Nonradioactive Liquid Waste Subsystem. This subsystem collects nonradioactive chemical drains, oil drains, and equipment and floor drains. Chemical and equipment and floor drains are pumped directly to the wastewater disposal system. Oil drains are pumped to an oil waste collection tank where the oil is separated and the wastewater portion is discharged to the wastewater disposal system.

5.201.3 Mode of Operation. The system is in use during all plant operating modes.

5.201.4 Major Interfacing Systems

Liquid Waste Management System	WD
Wastewater Disposal System	WH
Closed/Component Cooling Water System	CC

5.201.5 Major Equipment

Sump Pumps
Sump Coolers
Oil Waste Collection Tank

Copyright The Institute of Electrical and Electronics Engineers, Inc.
Provided by IHS under license with IEEE
No reproduction or networking permitted without license from IHS
Not for Resale