IEEE Std 776-1992 (R2003)
(Revision of IEEE Std 776-1987)

IEEE Recommended Practice for Inductive Coordination of Electric Supply and Communication Lines

Sponsor

**Transmission Systems Committee
of the
IEEE Communications Society**

Reaffirmed September 11, 2003

Approved December 3, 1992

IEEE Standards Board

Abstract: The inductive environment that exists in the vicinity of electric power and wire-line telecommunications systems and the interfering effects that may be produced are addressed. An interface that permits either party, without need to involve the other, to verify the induction at the interface by use of a probe wire is presented. This recommended practice does not apply to railway signal circuits.
Keywords: communication lines, electric supply, inductive coordination

The Institute of Electrical and Electronics Engineers, Inc.
345 East 47th Street, New York, NY 10017-2394, USA

Copyright © 1993 by the Institute of Electrical and Electronics Engineers, Inc.
All rights reserved. Published 1993. Printed in the United States of America

ISBN 1-55937-281-8

No part of this publication may be reproduced in any form, in an electronic retrieval system or otherwise, without the prior written permission of the publisher.

Copyright The Institute of Electrical and Electronics Engineers, Inc.
Provided by IHS under license with IEEE
No reproduction or networking permitted without license from IHS

Not for Resale

IEEE Standards documents are developed within the Technical Committees of the IEEE Societies and the Standards Coordinating Committees of the IEEE Standards Board. Members of the committees serve voluntarily and without compensation. They are not necessarily members of the Institute. The standards developed within IEEE represent a consensus of the broad expertise on the subject within the Institute as well as those activities outside of IEEE that have expressed an interest in participating in the development of the standard.

Use of an IEEE Standard is wholly voluntary. The existence of an IEEE Standard does not imply that there are no other ways to produce, test, measure, purchase, market, or provide other goods and services related to the scope of the IEEE Standard. Furthermore, the viewpoint expressed at the time a standard is approved and issued is subject to change brought about through developments in the state of the art and comments received from users of the standard. Every IEEE Standard is subjected to review at least every five years for revision or reaffirmation. When a document is more than five years old and has not been reaffirmed, it is reasonable to conclude that its contents, although still of some value, do not wholly reflect the present state of the art. Users are cautioned to check to determine that they have the latest edition of any IEEE Standard.

Comments for revision of IEEE Standards are welcome from any interested party, regardless of membership affiliation with IEEE. Suggestions for changes in documents should be in the form of a proposed change of text, together with appropriate supporting comments.

Interpretations: Occasionally questions may arise regarding the meaning of portions of standards as they relate to specific applications. When the need for interpretations is brought to the attention of IEEE, the Institute will initiate action to prepare appropriate responses. Since IEEE Standards represent a consensus of all concerned interests, it is important to ensure that any interpretation has also received the concurrence of a balance of interests. For this reason IEEE and the members of its technical committees are not able to provide an instant response to interpretation requests except in those cases where the matter has previously received formal consideration.

Comments on standards and requests for interpretations should be addressed to:

Secretary, IEEE Standards Board
445 Hoes Lane
P.O. Box 1331
Piscataway, NJ 08855-1331
USA

IEEE Standards documents are adopted by the Institute of Electrical and Electronics Engineers without regard to whether their adoption may involve patents on articles, materials, or processes. Such adoption does not assume any liability to any patent owner, nor does it assume any obligation whatever to parties adopting the standards documents.

--`,,`,,`-`-`,,`,,`,`,,`---

Copyright The Institute of Electrical and Electronics Engineers, Inc.
Provided by IHS under license with IEEE
No reproduction or networking permitted without license from IHS Not for Resale

Introduction

(This introduction is not a part of IEEE Std 776-1992, IEEE Recommended Practice for Inductive Coordination of Electric Supply and Communication Lines.)

During the five years since IEEE Std 776-1987 was published, the guide has provided a useful tool for those faced with inductive coordination problems. Questions have arisen about the stringent harmonic distribution used on the probe-wire interface described in table 2. This version of IEEE Std 776 provides flexibility in the use of harmonic distributions in table 2 to match the variety of existing environments and conditions. The general section was also rewritten in an effort to make it more understandable. Other sections have also been improved editorially. These efforts and contributions were made by Dick Nelson, Harold Held, Bill McCoy, Charlie Nelson, Chrys Chrysanthou, and David Boneau.

Since the publication of joint reports of the National Electric Light Association and the Bell System during and following the 1920s, the joint responsibility of inductive coordination between power and telecommunication companies has generally been accepted. However, the need has long been recognized for one document that defines the components of interference, provides specific procedures to predict levels of interference, provides specific methods to demonstrate cause and effect relationships, and defines a threshold for initiating coordination to mitigate interference. The Longitudinal Induction Working Group, which is under the direction of the Inductive Coordination and Electrical Protection (ICEP) Subcommittee of the Transmission Systems Committee of the Communications Society, has struggled to produce a fair and equitable approach to fill this need under the leadership of three different chairs. These chairs were, first, Harold C. Held, retired from Illinois Bell Telephone Company; second, the late James R. Wilson, formerly affiliated with South Central Bell Telephone Company; and third, David Lee Boneau of Southwestern Bell Telephone Company. Major contributions to the document were made by James R. Wilson, George Benz of Southern New England Telephone Company, and David Boneau. Members of the Oklahoma Power and Communications Association (originally the Oklahoma Inductive Coordination Association) furthered the development of the document by field testing and assuring the validity of the various calculations and measurement techniques. Many others have reviewed and helped to formulate a guide that is usable by both power and telecommunication company personnel.

Participants

Longitudinal Induction Working Group members at the time of balloting are as follows:

David Lee Boneau, *Chair*

G. Y. R. Allen
J. Allison
M. J. Anna
C. Chrysanthou
W. Dabisza
J. S. Gallatin
R. F. Gundrum
C. D. Hansell
D. Huber
D. P. Hartmann
W. M. Haynes, Jr.
H. C. Held
R. G. Jones
J. F. Laidig
W. J. McCoy
C. R. Nelson
R. E. Nelson
H. E. Nerhood
S. D. Overby
P. Pool
K. Sabine
M. S. Tibensky
W. B. Wilkens
R. G. Wunder
L. S. Young

Copyright The Institute of Electrical and Electronics Engineers, Inc.
Provided by IHS under license with IEEE
No reproduction or networking permitted without license from IHS
Not for Resale

Longitudinal Induction Working Group members at the time of the 1987 version were as follows:

David Lee Boneau, *Chair*

G. Y. R. Allen
J. E. Allison
M. J. Anna
G. W. Benz
W. Dabisza
L. W. Grovenstein
R. Gundrum
S. W. Guzik
C. D. Hansell
D. P. Hartmann
W. M. Haynes, Jr.
H. C. Held
L. M. Himmel, Sr.
P. Jackson
R. G. Jones
A. K. Knowles
G. H. Kuhn
J. F. Laidig
W. J. McCoy
R. E. Nelson
H. E. Nerhood
S. D. Overby
R. W. Parker
H. R. Stevenson
J. Thorson
M. S. Tibensky

The following persons were on the balloting committee that approved this document for submission to the IEEE Standards Board:

G. Y. R. Allen
J. Allison
M. J. Anna
C. Chrysanthou
W. Dabisza
J. S. Gallatin
R. F. Gundrum
C. D. Hansell
D. Huber
D. P. Hartmann
W. M. Haynes, Jr.
H. C. Held
R. G. Jones
J. F. Laidig
W. J. McCoy
C. R. Nelson
R. E. Nelson
H. E. Nerhood
S. D. Overby
P. Pool
K. Sabine
M. S. Tibensky
W. B. Wilkens
R. G. Wunder
L. S. Young

--`,`,`,,`-`-`,,`,,`,`,,`---
Copyright The Institute of Electrical and Electronics Engineers, Inc.
Provided by IHS under license with IEEE
No reproduction or networking permitted without license from IHS
Not for Resale

When the IEEE Standards Board approved this standard on December 3, 1992, it had the following membership:

Marco W. Migliaro, *Chair* **Donald C. Loughry,** *Vice Chair*
Andrew G. Salem, *Secretary*

Dennis Bodson	Donald N. Heirman	T. Don Michael*
Paul L. Borrill	Ben C. Johnson	John L. Rankine
Clyde Camp	Walter J. Karplus	Wallace S. Read
Donald C. Fleckenstein	Ivor N. Knight	Ronald H. Reimer
Jay Forster*	Joseph Koepfinger*	Gary S. Robinson
David F. Franklin	Irving Kolodny	Martin V. Schneider
Ramiro Garcia	D. N. "Jim" Logothetis	Terrance R. Whittemore
Thomas L. Hannan	Lawrence V. McCall	Donald W. Zipse

*Member Emeritus

Also included are the following nonvoting IEEE Standards Board liaisons:

Satish K. Aggarwal
James Beall
Richard B. Engelman
David E. Soffrin
Stanley Warshaw

Rochelle L. Stern
IEEE Standards Project Editor

Copyright The Institute of Electrical and Electronics Engineers, Inc.
Provided by IHS under license with IEEE
No reproduction or networking permitted without license from IHS
Not for Resale

Contents

1. Scope 1

2. References 1

3. General 2

3.1 Inductive interference 2
3.2 Need for coordination 3
3.3 Mutual responsibility of parties involved 3

4. The inductive environment 3

4.1 Guidelines for an acceptable environment 3
4.2 Methods of measurement 12
4.3 Methods of prediction 22

5. Coordination within the inductive environment 29

5.1 General Coordination Methods 29
5.2 Specific coordination methods 30

6. Administrative methods and procedures 32

6.1 Intercompany meetings and contacts 32
6.2 Mitigation of specific interference cases 32

7. Bibliography 34

Annex A Example calculations 35
A.1 Prediction calculations 35

A.2 Mitigation calculations 49

Annex B Decibel, power, and C-message noise 52

Copyright The Institute of Electrical and Electronics Engineers, Inc.
Provided by IHS under license with IEEE
No reproduction or networking permitted without license from IHS
Not for Resale

IEEE Recommended Practice for Inductive Coordination of Electric Supply and Communication Lines

1. Scope

This recommended practice addresses the inductive environment that exists in the vicinity of electric power and wire-line telecommunications systems and the interfering effect that may be produced thereby; guidance is offered for the control or modification of the environment and the susceptibility of the affected systems in order to maintain an acceptable level of interference.

To aid the user of this recommended practice in calculating induction between power and telecommunication lines, the concept of an interface is developed. This recommended practice permits either party, without need to involve the other, to verify the induction at the interface by use of a probe wire. This recommended practice does not apply to railway signal circuits.

2. References

This standard shall be used in conjunction with the following publications:

IEEE Std 81-1983, IEEE Guide for Measuring Earth Resistivity, Ground Impedance, and Earth Surface Potentials of a Ground System (ANSI).[1]

IEEE Std 367-1987, IEEE Recommended Practice for Determining the Electric Power Station Ground Potential Rise and Induced Voltage from a Power Fault (ANSI).

IEEE Std 487-1992, IEEE Recommended Practice for the Protection of Wire-Line Communication Facilities Serving Electric Power Stations (ANSI).

IEEE Std 789-1988, IEEE Standard Performance Requirements for Communications and Control Cables for Application in High Voltage Environments (ANSI).

IEEE Std 820-1984 (Reaff 1992), IEEE Standard Telephone Loop Performance Characteristics (ANSI).

IEEE Std 1137-1991, IEEE Guide for the Implementation of Inductive Coordination Mitigation Techniques (ANSI).

---

[1]IEEE publications are available from the Institute of Electrical and Electronics Engineers, Service Center, 445 Hoes Lane, P.O. Box 1331, Piscataway, NJ 08855-1331, USA.

Copyright The Institute of Electrical and Electronics Engineers, Inc.
Provided by IHS under license with IEEE
No reproduction or networking permitted without license from IHS
Not for Resale

3. General

3.1 Inductive interference

Inductive interference is defined as an effect, arising from the characteristics and inductive relations of electric supply and telecommunication systems. It is of such character and magnitude that it would prevent the telecommunication circuits from rendering service satisfactorily and economically if methods of inductive coordination were not applied. Inductive interference is produced by the simultaneous coexistence of three factors:

a) An inductive influence
b) A coupling mechanism between two electrical systems or circuits, one of which produces the influence
c) A susceptibility of the second system or circuit to interference

While inductive interference may occur at any time the above conditions are satisfied, the majority of cases and the principal concern of this recommended practice involve interference in telecommunication systems as a result of their proximity to electric power systems. Therefore, subsequent discussion is limited to that general case, although the principles and practices may apply to other cases as well.

3.1.1 Inductive influence

Inductive influence is defined as those characteristics of an electric supply circuit that determine the character and intensity of the inductive field that it produces. The voltage and current present on an operating power system produce electric and magnetic fields in the vicinity of the system. The character and intensity of those fields determine the inductive influence. Character is related primarily to the frequencies present, while intensity is related to the magnitude of voltages and currents modified by line configuration, current distribution, and any shielding structures in the immediate vicinity, excluding the shield of a telecommunications cable.

3.1.2 Coupling

Coupling is defined as the transfer of energy from one system to another. For the inductive influence of a power system to affect another system or circuit, there must be coupling between the two. The coupling mechanism consists of the mutual impedance between circuits in proximity to each other. This has resistive, capacitive, and inductive components. Electric induction, via capacitive coupling, may be consequential when the exposed circuit is composed of unshielded conductors above ground. However, when the exposed circuit conductors are within a grounded metallic sheath or shield, capacitive coupling generally may be considered negligible. Therefore, the coupling mechanism of primary concern will generally be the mutual inductance between an electric supply circuit or circuits and a telecommunications facility. The primary factors affecting coupling are separation of the systems, frequency of the magnetic field, and earth resistivity.

3.1.3 Susceptiveness

Susceptiveness is defined as those characteristics that determine the extent to which the service rendered by a telecommunications circuit can be adversely affected by a given longitudinal voltage or current. The existence of an inductive field and coupling with a metallic telecommunication circuit will cause longitudinal voltage to be induced in the telecommunication circuit. However, interference does not occur unless the circuit is susceptible to the induced voltage and resulting current. One kind of interference is the introduction of an unwanted signal (noise) into the circuit. The susceptiveness of the circuit to noise depends on the quality of the cable shield, the amplitude and frequency of the signal normally transmitted, circuit impedances and the longitudinal balance of the circuit and its associated equipment. Longitudinal balance determines the extent to which longitudinal (common-mode) voltage is converted to metallic (differential-mode) voltage.

--`,``,-`-`,,`,,`,`,,`---

Copyright The Institute of Electrical and Electronics Engineers, Inc.
Provided by IHS under license with IEEE
No reproduction or networking permitted without license from IHS Not for Resale

Interference may also be manifested as a malfunction in the operation of the circuit. The malfunction may be caused by electrical or thermal overstress of a circuit component by the induced voltage or resulting current. In addition, safety thresholds are to be considered.

3.2 Need for coordination

The continued successful coexistence of systems for the transmission, distribution, and utilization of electric power and telecommunications depends upon the ability of their providers to resolve problems of interference between the systems. The need for coordination between providers of electric supply and telecommunications lines has existed since the early days of the industries. At various times, cooperative studies have been undertaken, resulting in the dissemination of a large body of technical information on the subject. This information continues to grow with the expansion of these industries and the introduction of new technology. However, this growth and change introduces new concerns that should be addressed if continued compatibility of the systems is to be accomplished. Some of these concerns are as follows:

a) Ecological considerations, which encourages the placement of facilities on joint or adjacent rights-of-way
b) Higher-capacity power systems serving larger loads
c) Degradation of power quality due to the growth of nonlinear power loads
d) The use of more susceptible electronic devices and equipment for telecommunication and signaling systems

These concerns emphasize the need for continued cooperative inductive coordination.

3.3 Mutual responsibility of parties involved

Inductive coordination is a cooperative effort in the location, design, construction, operation and maintenance of power and telecommunications systems. These efforts will prevent inductive interference. Historically, inductive coordination has been accomplished through the cooperative efforts of the industries involved without regulatory intercession. This cooperative effort best meets the service needs of the public and resolves interference problems in the most equitable and economical manner. However, for such a cooperative effort to succeed, all parties involved should recognize and be willing to discharge a mutual responsibility for the handling of all inductive coordination problems that may arise.

4. The inductive environment

4.1 Guidelines for an acceptable environment

This portion of the recommended practice will address the following:

a) Areas of concern
b) Threshold considerations
c) Suggestion of a classification system
d) Definition of the interface
e) Establishment of an acceptable environmental threshold for positive action
f) Susceptiveness criteria for telecommunications plant

Copyright The Institute of Electrical and Electronics Engineers, Inc.
Provided by IHS under license with IEEE
No reproduction or networking permitted without license from IHS Not for Resale

4.1.1 Areas of concern

Three areas of consideration are as follows:

a) Safety from electrical shock due to personal contact with telecommunications conductors
b) The destruction of plant facilities as a result of dielectric breakdown or energy dissipation
c) The degradation or interruption of telecommunications

Each of these considerations is the result of the influencing current of the power system, the coupling between the two systems, and the susceptiveness of the telecommunication system.

4.1.2 Threshold considerations

The following is a list of threshold considerations from various standards on the telecommunications system (see table 1):

a) *Safety.* 50 V rms continuously induced with respect to ground at 60 Hz on telecommunication facilities has historically been considered an upper threshold by many telecommunications companies in North America. Electric power companies and railway telecommunications systems have historically used 60 V rms to ground at 60 Hz as their safety threshold. CCITT (telephone) also uses the 60 V rms level except for special cases when 150 V rms is accepted. Other higher thresholds have been established in other administrations.
b) *Damage of installed cable.* IEEE Std 487-1992[2] provides a method to obtain the 60 Hz conductor-to-conductor dielectric strength for plastic-insulated cable (PIC) typically used in telephone systems:

   1.8 kV rms for 19 AWG
   1.4 kV rms for 22 AWG
   1.2 kV rms for 24 AWG
   0.96 kV rms for 26 AWG

   Conductor-to-shield failure may also occur and should be considered. Paper insulated cables require special protection for peak voltages in excess of 1000 V.

c) *Destruction of equipment.* An indication of energy dissipation or the product of the current squared and time in line- repeater electronics is typically between 16 and 80 A^2s ($I^2 \cdot t$).
d) *Circuit degradation.* IEEE Std 820-1984 states that the recommended level of noise to ground is less than or equal to 80 dBrnC. The reference also states that 81–90 dBrnC levels are considered acceptable and those in excess of 90 dBrnC are not recommended on telephone voice frequency circuits.
e) *Circuit failure*
   1) The supervision on some voice frequency circuits may be adversely affected when the longitudinal current exceeds 5 mA.
   2) Communications carrier systems that are powered over the simplex may be adversely affected when the peak ac longitudinal current through the regulating diode approaches the dc powering current. The carrier will fail when the peak ac longitudinal current exceeds the dc powering current through the regulation diode.

[2]Information on references can be found in clause 2.

Copyright The Institute of Electrical and Electronics Engineers, Inc.
Provided by IHS under license with IEEE
No reproduction or networking permitted without license from IHS Not for Resale

Table 1—Acceptable 60 Hz rms voltage thresholds on probe-wire interface

(a) Safety and circuit degradation						
Class	A	A	A	B	B	B
Zone	1 (V)	2 (V)	3 (V)	1 (V)	2 (V)	3 (V)
Steady State *c*	0.3333	0.1000	0.0379	0.3333	0.1000	0.0379
Steady State *i*	0.6667	0.2000	0.0758	0.6667	0.2000	0.0758

i = inure
c = customer accessible
Class A = may not tolerate interruption
Class B = may tolerate interruption (self restoring)

(b) Installed cable damage				
Cable dielectric insulation	**Gauge**	**Zone 1 (V)**	**Zone 2 (V)**	**Zone 3 (V)**
PIC	19 22 24 26	12.0 9.3 8.0 6.4	3.6 2.8 2.4 1.9	1.36 1.06 0.91 0.73
Paper	9–24 26	6.6 6.4	2.0 1.9	0.76 0.73

Zone 1 = 0–15 kft (0–4572 m)
Zone 2 = 15–50 kft (4572–15 240 m)
Zone 3 > 50 kft (15 240 m) (calculation based on 132 kft or 40 234 m)

(c) Equipment destruction			
		Energy dissipation $I^2 \cdot t$ **16**	$I^2 \cdot t$ **80**
Fault duration (Cycles)	**Time (s)**	**(V)**	**(V)**
5	0.0833	22.17	49.57
10	0.1667	15.68	35.05
20	0.3333	11.09	24.79
40	0.6667	7.84	17.53
80	1.3330	5.54	12.39
160	2.6670	3.92	8.76
320	5.3330	2.77	6.20
640	10.6700	1.96	4.38

NOTES

1—$I^2 \cdot t$ is the same for all zones and classes.
2—Exposures are assumed to be uniform in all zones.

Copyright The Institute of Electrical and Electronics Engineers, Inc.
Provided by IHS under license with IEEE
No reproduction or networking permitted without license from IHS
Not for Resale

4.1.3 Classification system

A method of classifying telecommunication facilities in a given route will allow different environmental criteria. The classification scheme will have four components. The four components are as follows:

a) Circuit sensitivity to power fault conditions
b) Length consideration
c) Ability to inure (accepting an undesirable situation)
d) Fault duration

4.1.3.1 Circuit sensitivity

The power system produces two environments—the normal operating condition and the fault condition. Some telecommunication systems and circuits may tolerate interruption during a fault and others may not. For the purpose of this recommended practice, those that may tolerate a fault-caused interruption will be classified “B”; those that may not are classified “A.”

4.1.3.2 Length

Induced voltage is proportional to the length of the exposure. A length or zone qualifier will preclude an unreasonable economic burden on short exposures. The three zones will be defined as follows:

— Zone 1 = 0–15 kft (0–4572 m)
— Zone 2 =15–50 kft (4572–15 240 m)
— Zone 3 > 50 kft (15 240 m)

4.1.3.3 Inure

The inure classification will be applicable to those facilities a customer will not have access to conductors, and where the telecommunications utility is willing to condition these conductors to operate safely at interference levels of 50–100 steady-state V rms to ground.

i will designate inure (50–100 steady-state V rms to ground)
c will designate customer access (< 50 steady-state V rms to ground)

This classification will be designated by the telecommunication facility owner.

4.1.3.4 Fault duration

Energy dissipation is dependent upon a fault duration or clearing time. The fault condition must have the time specified and will be designated in seconds, reflecting the maximum time of fault current flow. Energy dissipation is determined by the power company and will indicate the magnitude of the energy in the environment.

Usually the fault duration at a particular location is the time required for the nearest line side protective equipment to operate and isolate a fault, assuming the maximum calculated symmetrical fault current at the fault location. When estimating the fault energy ($I^2 \cdot t$) for repeated reclosure operation on power lines, the following worst case assumptions may be made:

a) The time to be used for each reclosure cycle is the time from the onset of the fault until the operation of the breaker.
b) For distribution circuits, the fault currents and times for each reclosure cycle may be identical.
c) For transmission circuits, the fault currents and times for each reclosure cycle may be different.

Copyright The Institute of Electrical and Electronics Engineers, Inc.
Provided by IHS under license with IEEE
No reproduction or networking permitted without license from IHS Not for Resale

d) The total $I^2 \cdot t$ is the sum of the $I^2 \cdot t$'s of all the reclosure cycles.

Further information on fault duration may be found in IEEE Std 367-1987.

The telecommunications company will classify a route by circuit by components (a) through (c) as listed in 4.1.3.

4.1.4 The interface

Calculated or measured levels of induction can be assessed at an interface between the power and telecommunications utilities systems. These levels reflect:

a) The limiting magnitude and waveshape distortion generated by the power system
b) The levels that may cause telecommunication system safety, failure, or service degradation problems

The interface is specified and expressed in terms of a 100 ft (30.48 m) 22 gauge-insulated probe wire with grounded ends. The wire is placed on the ground parallel to the power line and at a radial distance of:

— 50 ft (15.24 m) to the geometric mean location of the power-line phase conductor distance, where power lines are less than 69 kV.
— 75 ft (22.86 m) to the closest power line phase conductor, where power lines are equal to or greater than 69 kV.

For the purpose of voltage or noise measurements, the probe wire is opened and the meter inserted. To keep errors small (less than 0.1 dB for the noise measurement) the meter impedance should be more than 100 times the impedance of the probe wire grounds. For the determination of the current to be used in energy dissipation analysis, currents will be calculated by Ohm's Law, assuming a perfect voltage source equivalent to the measured value and a shorted loop with an internal impedance of 1.6 Ω .

4.1.5 Acceptable environment thresholds

With the 100 ft probe wire set as the interface, and the classification scheme and limiting considerations defined, table 1(a) has been constructed to set voltage thresholds at 60 Hz. These levels, either measured or calculated on the interface, are based on the 50 V safety threshold.

Two harmonic distributions have been set for determining the thresholds of voltages induced on the probe wire. These two distributions form an envelope. In the 1987 version of IEEE Std 776, all harmonics were to fall below a voltage value that was taken as a percentage of 50 V. First, a distance based on the zone was divided into 100 and multiplied by 50 V for the 60 Hz threshold. Then a reduction or distribution factor was multiplied by the 60 Hz voltage limit to determine the individual harmonic voltage limit. The distribution factor was deter- mined by raising the order of each harmonic to –2.7. Another factor was also defined by raising the order of each harmonic to –1.7. This distribution factor was to be the used to identify an abnormal harmonic based on the actual measured value at 60 Hz. Experience has shown that these limits are more stringent than required above the 17th harmonic. In addition, the distribution factor derived from an exponent of –2.7 was based on a harmonic sum of all the harmonics exceeding the threshold. To mitigate the inequalities imposed in the 1987 version, the criteria for the threshold distributions will be set as follows:

a) For 3 or less harmonics:
   1) Maximum voltage for harmonics 2 through 17 (frequency 120 Hz through 1020 Hz) should be less than the voltage derived from the distribution factor based on an exponent –2. All other harmonics from 2 through 17 must be below the voltage level derived from the distribution factor based on an exponent of –2.7.
   2) Maximum voltage for harmonics 18 through 50 (1080 Hz through 3000 Hz) should be less than the voltage derived from the distribution factor based on equation 3A. All other harmonics must

Copyright The Institute of Electrical and Electronics Engineers, Inc.
Provided by IHS under license with IEEE
No reproduction or networking permitted without license from IHS
Not for Resale

be below the voltage level derived from the distribution factor based on equation 3B from harmonics 18 through 50.

3) Maximum voltage for harmonics 51 (3060 Hz) and above should not exceed the voltage level determined at 3000 Hz.

b) For more than 3 harmonics:

1) Maximum voltage for harmonics 2 through 17 (frequency 120 Hz through 1020 Hz) should be less than the voltage derived from the distribution factor based on an exponent –2.7 Hz.

2) Maximum voltage for harmonics 18 through 50 (1080 Hz through 3000 Hz), should be less than the voltage derived from the distribution factor based on equation 3B.

3) Maximum voltage for harmonics 51 (3060 Hz) and above, should not exceed the voltage level determined at 3000 Hz from equation 3B.

For harmonics *(n)* 2 to 17 (< 3 harmonics)

$$\boldsymbol{V}_d = \boldsymbol{V}_p \times n^{-2} \tag{1}$$

where

$\boldsymbol{V}_d$ is the distortion limit derived from the measured voltage at 60 Hz on the probe wire with only 3 harmonics above the limit set by –2.7 for harmonics 2–17 (frequency 120 Hz–1020 Hz)

$\boldsymbol{V}_p$ is the maximum voltage at 60 Hz on the probe wire for the indicated zone from table 1

n is the order of the harmonic

For harmonics *(n)* 2 to 17 (> 3 harmonics)

$$\boldsymbol{V}_d = \boldsymbol{V}_p \times n^{-2.7} \tag{2}$$

where

$\boldsymbol{V}_d$ is the resultant voltage for harmonic n

$\boldsymbol{V}_p$ is the maximum voltage at 60 Hz on the probe wire for the indicated zone from table 1

n is the order of the harmonic

For harmonics *(n)* 18 to 50

For extension of n^{-2}

$$\boldsymbol{V}_d = \boldsymbol{V}_p \times \frac{1}{17^2 + n^{1.2}} \tag{3A}$$

For extension of $n^{-2.7}$

$$\boldsymbol{V}_d = \boldsymbol{V}_p \times \frac{1}{17^{2.7} + n^{1.2}} \tag{3B}$$

where

$\boldsymbol{V}_d$ is the distortion limit derived from the measured voltage at 60 Hz on the probe wire between 1020 Hz and 3000 Hz

$\boldsymbol{V}_p$ is the maximum voltage at 60 Hz on the probe wire for the indicated zone from table 1

n is the order of the harmonic

Typically, no harmonic will exceed the 60 Hz measured value multiplied by the reciprocal of the harmonic number raised to the 1.7th power.

Copyright The Institute of Electrical and Electronics Engineers, Inc.
Provided by IHS under license with IEEE
No reproduction or networking permitted without license from IHS Not for Resale

$$V_d = V_m \times n^{-1.7} \quad (4)$$

where

V_d is the distortion limit derived from the measured voltage at 60 Hz on the probe wire
V_m is the voltage at 60 Hz measured on the probe wire
n is the order of the harmonic

Table 2 contains a listing of the voltage threshold levels by zone.

Table 2—Circuit degradation (voltage by harmonic on the probe wire interface)

n	f (Hz)	< 3 Harmonics (equation 1)					> 3 Harmonics (equation 2)				
		$n^{-2.0}$	(dB)	V_1 (V)	V_2 (V)	V_3 (V)	$n^{-2.7}$	(dB)	V_1 (V)	V_2 (V)	V_3 (V)
1	60	1.000E+00	0	0.333E+00	0.100E+00	0.379E-01	0.100E+01	0	0.333E+00	0.100E+00	0.379E-01
2	120	2.500E-01	-12	0.833E-01	0.250E-01	0.948E-02	0.154E+00	-16	0.513E-01	0.154E-01	0.583E-02
3	180	1.111E-01	-19	0.370E-01	0.111E-01	0.421E-02	0.515E-01	-26	0.172E-01	0.515E-02	0.195E-02
4	240	6.250E-02	-24	0.208E-01	0.625E-02	0.237E-02	0.237E-01	-33	0.789E-02	0.237E-02	0.898E-03
5	300	4.000E-02	-28	0.133E-01	0.400E-02	0.152E-02	0.130E-01	-38	0.432E-02	0.130E-02	0.491E-03
6	360	2.778E-02	-31	0.926E-02	0.278E-02	0.105E-02	0.792E-02	-42	0.264E-02	0.792E-03	0.300E-03
7	420	2.041E-02	-34	0.680E-02	0.204E-02	0.773E-03	0.523E-02	-46	0.174E-02	0.523E-03	0.198E-03
8	480	1.563E-02	-36	0.521E-02	0.156E-02	0.592E-03	0.364E-02	-49	0.121E-02	0.364E-03	0.138E-03
9	540	1.235E-02	-38	0.411E-02	0.123E-02	0.468E-03	0.265E-02	-52	0.884E-03	0.265E-03	0.101E-03
10	600	1.000E-02	-40	0.333E-02	0.100E-02	0.379E-03	0.200E-02	-54	0.665E-03	0.200E-03	0.756E-04
11	660	8.264E- 03	-42	0.275E-02	0.826E-03	0.313E-03	0.154E-02	-56	0.514E-03	0.154E- 03	0.585E-04
12	720	6.944E-03	-43	0.231E-02	0.694E-03	0.263E-03	0.122E-02	-58	0.406E-03	0.122E-03	0.462E-04
13	780	5.917E-03	-45	0.197E-02	0.592E-03	0.224E-03	0.983E-03	-60	0.327E-03	0.983E-04	0.372E-04
14	840	5.102E-03	-46	0.170E-02	0.510E-03	0.193E-03	0.804E-03	-62	0.268E-03	0.804E-04	0.305E-04
15	900	4.444E-03	-47	0.148E-02	0.444E-03	0.168E-03	0.668E-03	-64	0.223E-03	0.668E-04	0.253E-04
16	960	3.906E-03	-48	0.130E-02	0.391E-03	0.148E-03	0.561E-03	-65	0.187E-03	0.561E-04	0.213E-04
17	1020	3.460E-03	-49	0.115E-02	0.346E-03	0.131E-03	0.476E-03	-66	0.159E-03	0.476E-04	0.180E-04

Copyright The Institute of Electrical and Electronics Engineers, Inc.
Provided by IHS under license with IEEE
No reproduction or networking permitted without license from IHS
Not for Resale

Table 2—Circuit degradation (Continued)
(voltage by harmonic on the probe wire interface)

n	f (Hz)	< 3 Harmonics (equation 1)					> 3 Harmonics (equation 2)				
		$\frac{1}{17^2+n^{1.2}}$ (equation 3A)	(dB)	V_1 (V)	V_2 (V)	V_3 (V)	$\frac{1}{17^{2.7}+n^{1.2}}$ (equation 3B)	(dB)	V_1 (V)	V_2 (V)	V_3 (V)
18	1080	3.114E-03	-50	0.104E-02	0.311E-03	0.118E-03	0.469E-03	-67	0.156E-03	0.469E-04	0.178E-04
19	1140	3.094E-03	-50	0.103E-02	0.309E-03	0.117E-03	0.469E-03	-67	0.156E-03	0.469E-04	0.178E-04
20	1200	3.073E-03	-50	0.102E-02	0.307E-03	0.116E-03	0.468E-03	-67	0.156E-03	0.468E-04	0.177E-04
21	1260	3.052E-03	-50	0.102E-02	0.305E-03	0.116E-03	0.468E-03	-67	0.156E-03	0.468E-04	0.177E-04
22	1320	3.032E-03	-50	0.101E-02	0.303E-03	0.115E-03	0.467E-03	-67	0.156E-03	0.467E-04	0.177E-04
23	1380	3.012E- 03	-50	0.100E-02	0.301E-03	0.114E-03	0.467E-03	-67	0.156E-03	0.467E- 04	0.177E-04
24	1440	2.991E-03	-50	0.997E-03	0.299E-03	0.113E-03	0.466E-03	-67	0.155E-03	0.466E-04	0.177E-04
25	1500	2.971E-03	-51	0.990E-03	0.297E-03	0.113E-03	0.466E-03	-67	0.155E-03	0.466E-04	0.176E-04
26	1560	2.951E-03	-51	0.984E-03	0.295E-03	0.112E-03	0.465E-03	-67	0.155E-03	0.465E-04	0.176E-04
27	1620	2.931E-03	-51	0.977E-03	0.293E-03	0.111E-03	0.465E-03	-67	0.155E-03	0.465E-04	0.176E-04
28	1680	2.911E-03	-51	0.970E-03	0.291E-03	0.110E-03	0.464E-03	-67	0.155E-03	0.464E-04	0.176E-04
29	1740	2.891E-03	-51	0.964E-03	0.289E-03	0.110E-03	0.464E-03	-67	0.155E-03	0.464E-04	0.176E-04
30	1800	2.872E- 03	-51	0.957E-03	0.287E-03	0.109E-03	0.463E-03	-67	0.154E-03	0.463E- 04	0.176E-04
31	1860	2.852E-03	-51	0.951E-03	0.285E-03	0.108E-03	0.463E-03	-67	0.154E-03	0.463E-04	0.175E-04
32	1920	2.833E-03	-51	0.944E-03	0.283E-03	0.107E-03	0.462E-03	-67	0.154E-03	0.462E-04	0.175E-04
33	1980	2.814E-03	-51	0.938E-03	0.281E-03	0.107E-03	0.462E-03	-67	0.154E-03	0.462E-04	0.175E-04
34	2040	2.795E-03	-51	0.931E-03	0.279E-03	0.106E-03	0.461E-03	-67	0.154E-03	0.461E-04	0.175E-04
35	2100	2.776E-03	-51	0.925E-03	0.278E-03	0.105E-03	0.461E-03	-67	0.154E-03	0.461E-04	0.175E-04
36	2160	2.757E-03	-51	0.919E-03	0.276E-03	0.104E-03	0.460E-03	-67	0.153E-03	0.460E-04	0.174E-04
37	2220	2.738E- 03	-51	0.913E-03	0.274E-03	0.104E-03	0.460E-03	-67	0.153E-03	0.460E- 04	0.174E-04
38	2280	2.720E-03	-51	0.907E-03	0.272E-03	0.103E-03	0.459E-03	-67	0.153E-03	0.459E-04	0.174E-04
39	2340	2.702E-03	-51	0.900E-03	0.270E-03	0.102E-03	0.458E-03	-67	0.153E-03	0.458E-04	0.174E-04
40	2400	2.683E-03	-51	0.894E-03	0.268E-03	0.102E-03	0.458E-03	-67	0.153E-03	0.458E-04	0.174E-04
41	2460	2.665E-03	-51	0.888E-03	0.267E-03	0.101E-03	0.457E-03	-67	0.152E-03	0.457E-04	0.173E-04
42	2520	2.648E-03	-52	0.882E-03	0.265E-03	0.100E-03	0.457E-03	-67	0.152E-03	0.457E-04	0.173E-04

Copyright The Institute of Electrical and Electronics Engineers, Inc.
Provided by IHS under license with IEEE
No reproduction or networking permitted without license from IHS
Not for Resale

Table 2—Circuit degradation (Continued)
(voltage by harmonic on the probe wire interface)

n	*f* (Hz)	< 3 Harmonics (equation 1)					> 3 Harmonics (equation 2)				
		$\frac{1}{17^2+n^{1.2}}$ (equation 3A)	(dB)	V_1 (V)	V_2 (V)	V_3 (V)	$\frac{1}{17^{2.7}+n^{1.2}}$ (equation 3B)	(dB)	V_1 (V)	V_2 (V)	V_3 (V)
43	2580	2.630E-03	-52	0.877E-03	0.263E-03	0.997E-04	0.456E-03	-67	0.152E-03	0.456E-04	0.173E-04
44	2640	2.612E- 03	-52	0.871E-03	0.261E-03	0.990E-04	0.456E-03	-67	0.152E-03	0.456E- 04	0.173E-04
45	2700	2.595E-03	-52	0.865E-03	0.260E-03	0.984E-04	0.455E-03	-67	0.152E-03	0.455E-04	0.173E-04
46	2760	2.578E-03	-52	0.859E-03	0.258E-03	0.977E-04	0.455E-03	-67	0.152E-03	0.455E-04	0.172E-04
47	2820	2.561E-03	-52	0.853E-03	0.256E-03	0.971E-04	0.454E-03	-67	0.151E-03	0.454E-04	0.172E-04
48	2880	2.544E-03	-52	0.848E-03	0.254E-03	0.964E-04	0.454E-03	-67	0.151E-03	0.454E-04	0.172E-04
49	2940	2.527E-03	-52	0.842E-03	0.253E-03	0.958E-04	0.453E-03	-67	0.151E-03	0.453E-04	0.172E-04
50	3000	2.510E-03	-52	0.837E-03	0.251E-03	0.951E-04	0.453E-03	-67	0.151E-03	0.453E-04	0.172E-04

V_1 = Zone 1 threshold voltage (0–15 kft) (0–4572 m)
V_2 = Zone 2 threshold voltage (15–50 kft) (4572–15 240 m)
V_3 = Zone 3 threshold voltage (> 50 kft) (15 240 m)

n = number of harmonic
f = frequency of harmonic
dB = the decibel reduction equivalent of n raised to indicated power

Copyright The Institute of Electrical and Electronics Engineers, Inc.
Provided by IHS under license with IEEE
No reproduction or networking permitted without license from IHS
Not for Resale

4.1.6 Susceptiveness of communications facilities

The susceptiveness of the telecommunications facility should be maintained at a level that would preclude interference in the presence of an electrical environment set by table 1 and table 2.

4.2 Methods of measurement

This portion of the recommended practice will address those measurements on telecommunications cable, loop antenna, probe wire, power-supply lines, and customer-power equipment. In addition, the type of measurement equipment required in each measurement will be explored along with methods for analyzing the raw data results.

4.2.1 Test equipment and units

Oscilloscopes, spectrum analyzers, voltmeters, frequency-selective voltmeters, and noise measuring sets (NMS) produce readings in different formats and possibly in different units. To produce equivalent readings, different test sets must apply a similar terminating impedance to the circuit and have similar frequency response to a complex waveform. Test equipment designed for use in telecommunication circuit measurements should typically have an internal circuit termination, a longitudinal balance above 75 dB (or 14 dB better balance than the circuit to be measured), a measurement unit of dBrn, dBm, C-message, and 3 kHz flat weighting, and a noise-to-ground termination of 100 000 Ω . Other types of test equipment may be used that are of a general nature for these tests if an appropriate technique of connection and result analysis is used.

In fact, the use of spectrum analyzers and oscilloscopes may greatly enhance the analysis of a complex waveform. The C-message frequency-response individual weightings are listed in table 3.

Volts, dBm, dBrn, and dBv are the most common units used by this type of test equipment. The definition of decibel is 10 times the common log of the ratio of two powers:

$$\mathrm{dB} = 10 \times \left[\log\left(\frac{\mathrm{power}_1}{\mathrm{power}_2} \right) \right] \tag{5}$$

If there is an identical circuit terminating impedance, the definition may be changed to 20 times the ratio of two voltages or currents:

$$\mathrm{dB} = 20 \times \log\left[\frac{V_1}{V_2} \right] \tag{6A}$$

$$V_1 = 10^{\frac{\mathrm{dB}}{20}} \times V_2 \tag{6B}$$

--`,``,,-`-`,,`,,`,`,,`---

Copyright The Institute of Electrical and Electronics Engineers, Inc.
Provided by IHS under license with IEEE
No reproduction or networking permitted without license from IHS Not for Resale

When the reference power is 1 mW and the impedance is 600 Ω (an impedance commonly used in voice band telecommunication practice), the reference voltage is 0.775 V and the unit is dBm (decibel referenced to 1 mW). When the reference power is 1 pW with a 600 Ω impedance, the reference voltage is 0.000 024 5 V and the unit is dBrn (decibel reference noise). When using a measuring set incorporating a C-message network to measure dBrnC, the reference of 1 pW must be taken at 1000 Hz. The unit of dBv uses a reference of 1 V. Therefore, the common unit is the volt and may be converted to any unit for equivalence using the volt as a reference. For example:

unit	impedance (Ω)	voltage $(V)^2$	power (w)
dBrn	600	24.5×10^{-6}	10^{-12}
dBm	600	0.775	0.001
dBV	1000	1.0	0.001

NOTE—See annex B for further explanation.

Table 3—C-Message weighting

Harmonic			
n	***f*** **(Hz)**	**(dB)**	**Voltage multiplier**
1	60	–55.7	0.001 67
2	120	–35.5	0.016 67
3	180	–29.6	0.033 33
4	240	–21.2	0.087 50
5	300	–16.5	0.150 00
6	360	–13.1	0.222 22
7	420	–10.2	0.309 52
8	480	–8.0	0.395 83
9	540	–6.2	0.488 89
10	600	–4.5	0.596 67
11	660	–3.3	0.684 85
12	720	–2.3	0.766 67
13	780	–1.3	0.861 54
14	840	–0.8	0.911 90
15	900	–0.3	0.966 67
16	960	–0.2	0.977 08
17	1020	0.0	1.000 00
18	1080	0.0	1.000 00
19	1140	–0.1	0.987 72

Copyright The Institute of Electrical and Electronics Engineers, Inc.
Provided by IHS under license with IEEE
No reproduction or networking permitted without license from IHS
Not for Resale

Table 3—C-Message weighting (Continued)

Harmonic			
n	***f*** **(Hz)**	**(dB)**	**Voltage multiplier**
20	1200	–0.2	0.976 67
21	1260	–0.4	0.960 32
22	1320	–0.5	0.943 94
23	1380	–0.7	0.923 19
24	1440	–0.7	0.902 78
25	1500	–1.0	0.890 67
26	1560	–1.2	0.870 51
27	1620	–1.3	0.860 49
28	1680	–1.5	0.840 48
29	1740	–1.5	0.841 38
30	1800	–1.5	0.841 11
31	1860	–1.5	0.840 86
32	1920	–1.5	0.840 63
33	1980	–1.5	0.841 41
34	2040	–1.5	0.841 18
35	2100	–1.5	0.840 95
36	2160	–1.5	0.840 74
37	2220	–1.5	0.840 54
38	2280	–1.5	0.841 23
39	2340	–1.5	0.841 03
40	2400	–1.5	0.840 83
41	2460	–1.5	0.840 65
42	2520	–1.6	0.831 75
43	2580	–1.7	0.821 71
44	2640	–1.9	0.803 79
45	2700	–2.2	0.776 30
46	2760	–2.5	0.750 00
47	2820	–2.8	0.724 11
48	2880	–3.2	0.691 67
49	2940	–3.5	0.668 03
50	3000	–4.0	0.644 67

--`,`,`,,-`-`,,`,,`,`,,`---

Copyright The Institute of Electrical and Electronics Engineers, Inc.
Provided by IHS under license with IEEE
No reproduction or networking permitted without license from IHS Not for Resale

4.2.2 Communication cable measurements

The following four direct cable measurements provide information on the inductive influence:

a) Longitudinally induced voltage to ground on cable pair
b) The metallic voltage across the cable pair
c) The longitudinal current on the pair
d) The longitudinal shield current

Figure 1 is the universal test set configuration that may be used with figures 3–7.

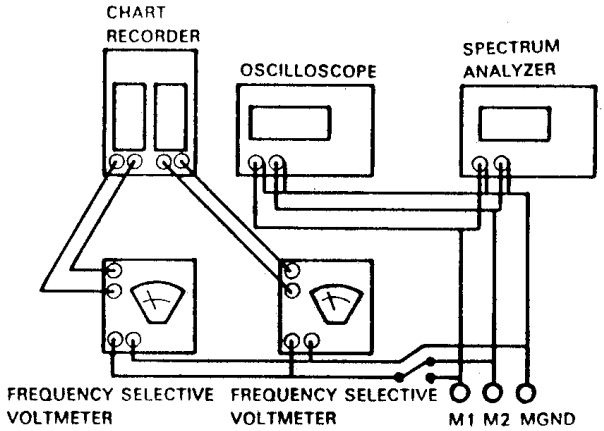

Figure 1—Test equipment configuration

Voltage-to-ground measurements are typically made at the customer end with the central office end of the cable terminated to ground using a dial-up balanced termination or the equivalent shown in figure 2.

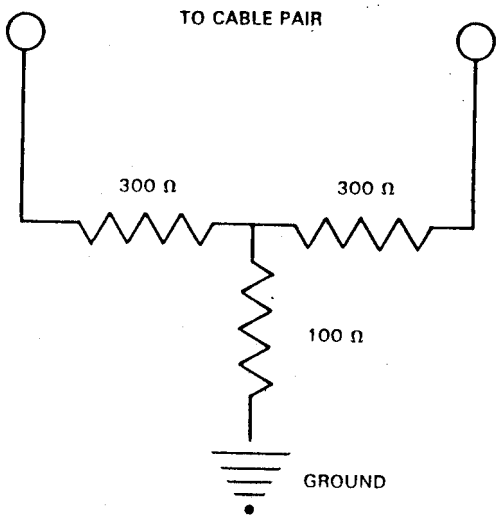

Figure 2—Balanced termination

Copyright The Institute of Electrical and Electronics Engineers, Inc.
Provided by IHS under license with IEEE
No reproduction or networking permitted without license from IHS
Not for Resale

The customer end of the cable pair should be terminated to ground through 100 000 Ω. This may be done internally on some test equipment or may be accomplished using the termination shown in figure 3. This termination in figure 3 also allows for the simultaneous measurement of noise to ground and noise metallic.

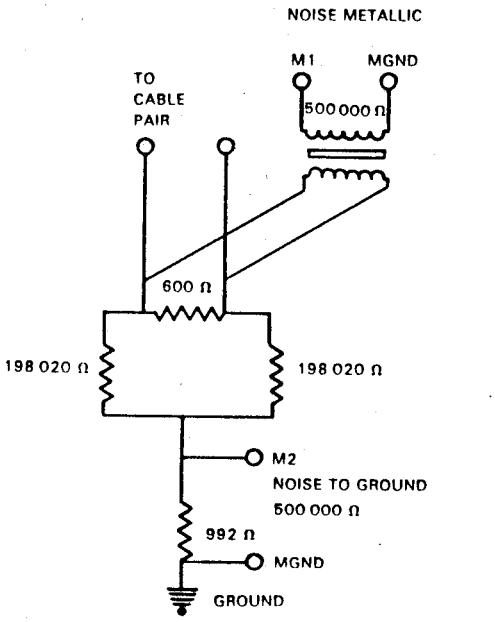

Figure 3—100 000 Ω termination

The noise metallic measurement must be calibrated by the frequency response of the repeat coil or transformer. Note also that the repeat coil allows for measurement with a test set that is not a balanced input. When this termination is built, note that a precision of 0.0035% is required to measure balances up to 75 dB. The longitudinal termination in figure 3 incorporates a 40 dB pad (100:1 voltage divider). This 40 dB must be added to a noise-to- ground decibel reading, or a voltage noise-to-ground reading must be multiplied by 100. Power influence measured in decibel reference noise is equivalent to noise-to-ground plus 40 dB. If a spectrum analyzer or a frequency selective voltmeter is used in these two measurements, the results may be converted to C-message by subtracting the individual frequency weightings in table 3. An equivalent summation to an NMS may be obtained by using a power sum of the individual weighted components.

$$dBrnC = 10 \times \log\left(10^{\frac{dBrnC1}{10}} + 10^{\frac{dBrnC2}{10}} + ...\right) \quad (7)$$

where

dBrnC is the power sum of the individual harmonics C-message weighted
dBrnC# is the individual harmonic C-message weighted

This technique also provides a quick check for determining that all the significant frequency components have been measured.

Copyright The Institute of Electrical and Electronics Engineers, Inc.
Provided by IHS under license with IEEE
No reproduction or networking permitted without license from IHS Not for Resale

When the noise-to-ground (corrected by 40 dB) and the noise-metallic have been converted to a common decibel base and C-message weighting has been applied, the differences in the dBrnC readings provide a statement of the quality of the relative impedance of the cable pair conductors to ground (longitudinal balance).

$$dBC = dBrnC \text{ to ground} - dBrnC \text{ metallic} \tag{8}$$

$$dB = 20 \times \left[\log\left(\frac{V_g}{V_m}\right)\right] \tag{9}$$

where

dBC is the decibel C-message weighted balance for the purpose of this recommended practice
V_g is the voltage to ground
V_m is the voltage metallic

The longitudinal current on the cable pair may be measured by utilizing figure 4. The voltage value is to be divided by 100 Ω for a current reading. Since the longitudinal impedance is frequency-sensitive, the highest longitudinal current components may not be the same as the highest longitudinal voltage components.

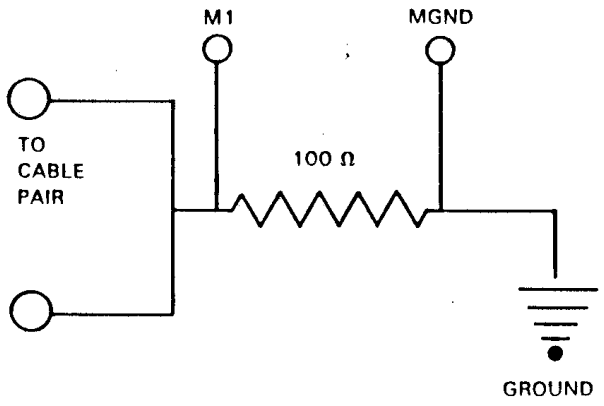

Figure 4—Method for measuring longitudinal current

Copyright The Institute of Electrical and Electronics Engineers, Inc.
Provided by IHS under license with IEEE
No reproduction or networking permitted without license from IHS
Not for Resale

Longitudinal shield current may be measured at any location using figure 5. In this test, a clamp-on current transformer is placed around a bond wire connecting a shield opening. The current is determined by dividing the shunt resistance into the voltage reading and multiplying the results by the current transformer ratio.

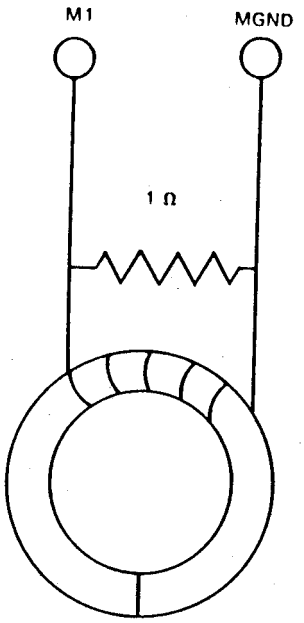

Figure 5—Method for measuring shield current

4.2.3 Loop antenna measurements

The loop antenna provides a method of obtaining the relative amplitudes of net interfering current on the power system by use of an air-core transformer (see figure 6). The power line provides a one turn winding primary to whatever number of turns the loop antenna has. The loop antenna is a tool for use in defining the relative interference sections along the cable route and can be used for determining probe-wire measurement locations. In addition to the spectrum analyzer and oscilloscope, a strip recorder is very advantageous in determining the location of uniform interference sections (see figure 1). If a distance-measuring device is added to drive a mark event pen on the strip recorder, the precise length and location of each section may be documented while driving the cable route.

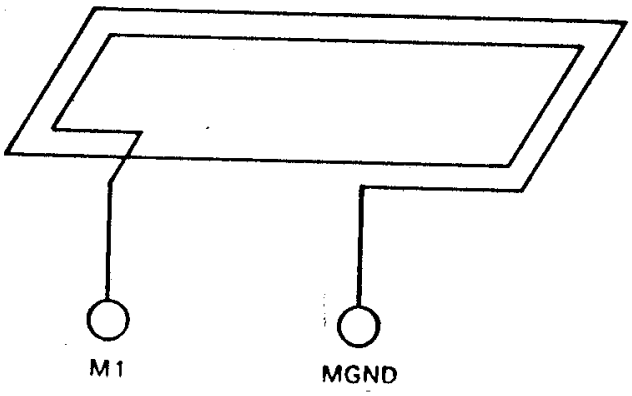

Figure 6—Loop antenna

Copyright The Institute of Electrical and Electronics Engineers, Inc.
Provided by IHS under license with IEEE
No reproduction or networking permitted without license from IHS Not for Resale

Several different devices may be used to drive the chart recorder. The dc monitor jack on an NMS may provide a source for broad band measurements; however, a frequency-selective voltmeter with a dc monitor jack will provide the ability to search for the predominant interfering frequency component. The use of a frequency-selective voltmeter with a sweep oscillator may provide the relative level of the whole spectrum. Utilizing several of these techniques on a multiple channel recorder may provide complete documentation in a minimum of time and eliminate the differences caused by time variations.

4.2.4 Probe-wire measurements

The probe-wire test is a method that allows for the accurate determination of the amplitude and frequency of interfering current on the power system in each uniform interference section, as well as the impact on the telecommunications system. This is accomplished by placing a 100 ft (30.48 m) insulated wire grounded on one end directly on the ground parallel to the power system. After determining the geometric relationship as accurately as possible and measuring the soil resistivity, the mutual impedance between the wire and the power line should be determined at frequency components of interest. The voltage is then measured by frequency on the probe wire with a frequency-selective voltmeter or spectrum analyzer. The input impedance of the measuring set should be at least 100 times the impedance of the ground probes for an error of less than 0.1 dB. This measurement is made between the ungrounded end of the probe wire and a second ground probe at the ungrounded end (see figure 7). The interfering current at each frequency on the power system is then calculated by dividing the voltage on the probe wire by the mutual impedance between the probe wire and power line. The probe-wire test is very susceptible to ground potential rise (GPR) between the probes and secondary voltages produced by other current-carrying conductors in the vicinity, which causes significant errors. If the power line has vertical grounds at each pole, the GPR impact may be minimized by placing the center of the probe wire on a line perpendicular to the power line at a pole. The evaluation of the algorithm in IEEE Std 367-1987 provides the required mutual impedance. Avoid areas of buried pipe lines and metal fences when making the test. When measuring soil resistivity, remember that the soil has self-inductance, and a dc measurement will add error to the mutual impedance calculation at higher frequencies. For further information, refer to IEEE Std 81-1983.

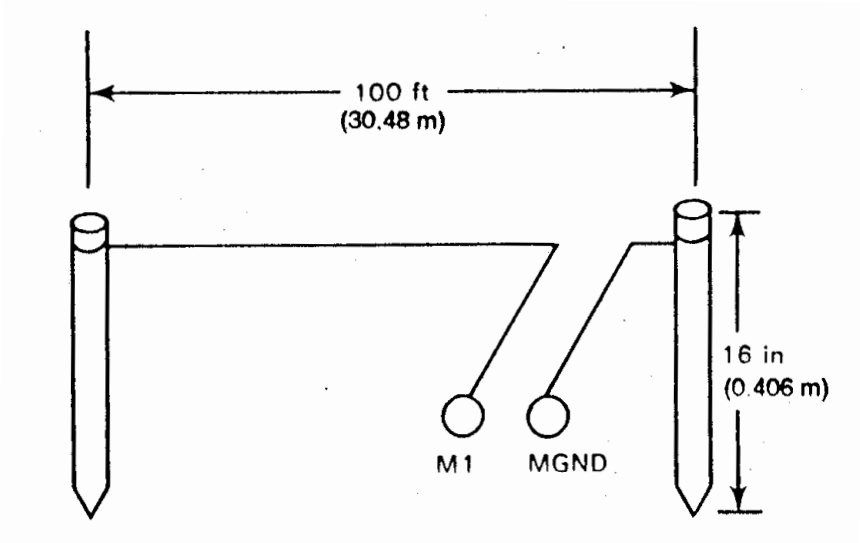

Figure 7—Probe wire

4.2.5 Shielding quality analysis

One method of determining the shielding effectiveness of a cable shield is to compare the voltage-to-ground on the cable pair in a uniform section with the voltage on the probe wire over the frequency spectrum being

Copyright The Institute of Electrical and Electronics Engineers, Inc.
Provided by IHS under license with IEEE
No reproduction or networking permitted without license from IHS
Not for Resale

measured. The best method for this comparison is to subtract the amplitudes of the individual frequency measurements from the amplitude at 60 Hz and plot the results as dB down. This will normalize the 60 Hz component to 0 and allow the direct comparison of a shielded component to an unshielded component. Since the comparison is in decibels, the difference provides the shield effectiveness above 60 Hz by frequency. This comparison to the actually measured shield current distribution may provide insight into the source of the shield current and effectiveness of shield grounds between uniform interference sections.

4.2.6 Longitudinal balance analysis

Plotting the longitudinal balance by frequency may provide insight into the cause of the longitudinal unbalance in the cable. The resistance and leakage in the voice frequency range are frequency-independent. The reactive component is, however, very frequency dependent. Therefore, the slope of the plot may provide a clue to the type of unbalance. Plots that are linear with slopes close to zero indicate resistive unbalances and nonlinear plots with larger slopes indicate capacitive unbalances. Comparing longitudinal balance in the frequency spectrum with voltage-to-ground in the frequency spectrum can indicate that poor-apparent NMS C-message balances are to be expected with abnormal voltage-to-ground at higher frequencies.

4.2.7 Voltage-to-ground distribution analysis

Surveys have been made that have established typical and abnormal harmonic voltage conditions on shielded cable. Plotting the noise-to-ground dB down against 60 Hz on the same plot with the statistical results of the survey may provide an indication of an abnormal harmonic distribution on the power system. Figure 8 provides a chart for this comparison.

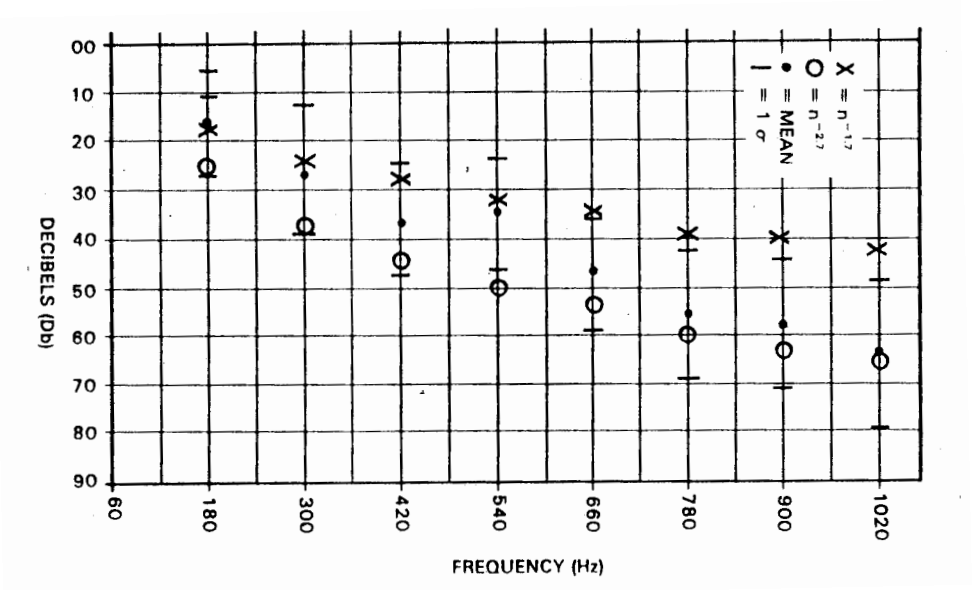

Figure 8—dB down from 60 Hz chart

Copyright The Institute of Electrical and Electronics Engineers, Inc.
Provided by IHS under license with IEEE
No reproduction or networking permitted without license from IHS Not for Resale

The harmonic power sum of the mean distribution, plus one standard deviation and a midpoint between those two, provide a quick indication of the power-line harmonic condition by comparing a flat-weighted noise-to-ground measurement with a C-message weighted measurement. This comparison may indicate the possibility of a normal or abnormal harmonic distribution.

Quick distribution sum comparison	
Mean distribution	C-message 38 dB below flat
Plus 1 standard deviation	C-message 24 dB below flat
Midpoint between	C-message 31 dB below flat

NOTE—A reading of 95.2 dBrnC, which is 31 dB below the flat reading, would indicate a flat reading of 126.2 dBrn. This is equivalent to 50 V, i.e., 95.2 dBrnC + 31 dB = 126.2 dBrn = 50 V.

When the difference between a flat and a C-message reading to ground on an NMS is less than 24 dB, further analysis may indicate an abnormal harmonic condition.

4.2.8 Direct power distribution line measurements

Direct power distribution line measurements may be undertaken as a joint venture between the power and telecommunications companies. The amplitude of the voltage to ground on each phase conductor, the amplitude of the current on each phase conductor and the neutral, the zero sequence current, the net-interfering current, the phase angle between voltage and current in each phase conductor, and the phase angle between the currents of the phase conductors may be measured using the interface arrangement in figure 9. These measurements may be required in whole or in part to determine the source of an abnormal harmonic condition and balance on the power system.

CAUTION

Never open the secondary of the current transformer.

Note that all secondary outputs are grounded; however, for summation or zero sequence measurements, all but one of these grounds must be removed with the outputs wired in a series configuration on current measurements.

4.2.9 Direct power customer electric measurements

When the source of the abnormal harmonic condition is traced to a power customer, it may be necessary to make voltage and current measurements directly at the customer's premises. The current measurements may be made on insulated conductors using the current transformer technique shown in figure 5. Voltage measurements may be made using the voltage divider applied across the voltage transformer in figure 9.

A practical way to compare the customer premises measurements is to plot the data on the dB down from 60 Hz chart (figure 8). Comparison can then be made.

--`,``,-`-`,,`,,`,`,,`---

Copyright The Institute of Electrical and Electronics Engineers, Inc.
Provided by IHS under license with IEEE
No reproduction or networking permitted without license from IHS
Not for Resale

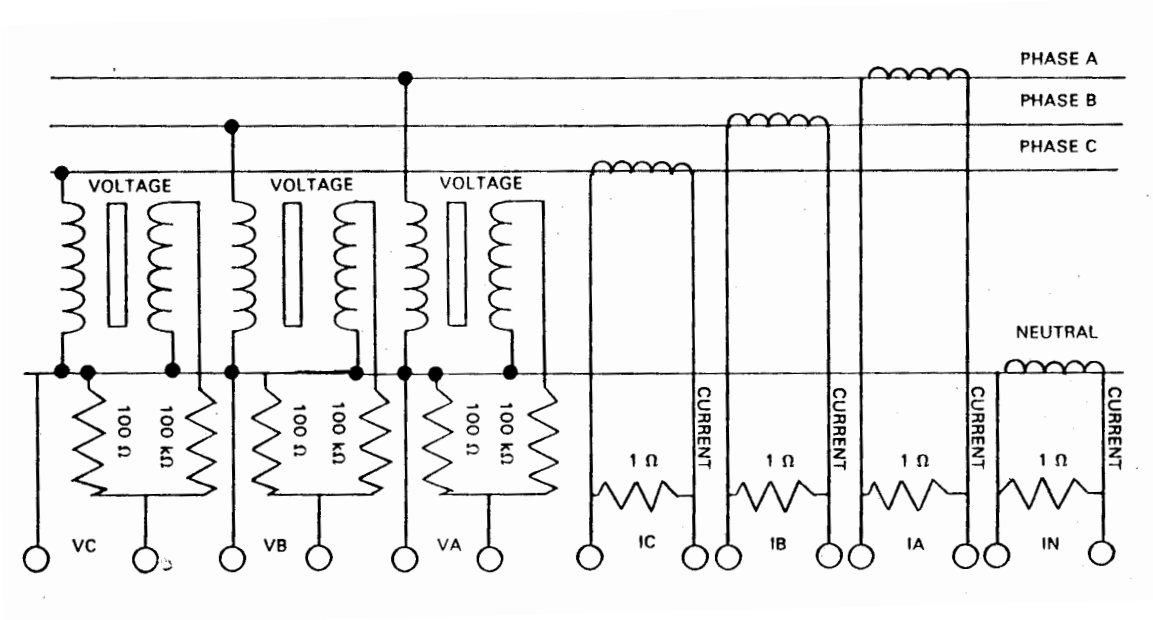

Figure 9—Direct power-line measurement arrangement

4.3 Methods of prediction

This portion of the recommended practice will address a procedure for predicting induced voltage levels on the probe-wire interface and suggest how to predict voltage and resulting currents on the telecommunications facilities.

4.3.1 The basic relationship

The entire concept of prediction is based on the following relationship. The product of a complex current ($\boldsymbol{I}_i$), a complex coupling quantity ($\boldsymbol{Z}_m$) referenced as mutual impedance, and a complex quantity called shield factor ($\boldsymbol{sf}$) produces a complex voltage (V). Normally, only the absolute value of the shield factor is used and is taken to be a scalar quantity.

$$\vec{V}_s = \vec{Z}_m \times \vec{I}_i \times s\vec{f} \tag{10}$$

where

$\vec{V}_s$ is the induced voltage

$\vec{Z}_m$ is the mutual impedance

$\vec{I}_i$ is the interfering current

$s\vec{f}$ is the shield factor

Copyright The Institute of Electrical and Electronics Engineers, Inc.
Provided by IHS under license with IEEE
No reproduction or networking permitted without license from IHS Not for Resale

This relationship quantitatively describes the condition where a complex current flowing in one conductor will produce a corresponding voltage on a second conductor that is not perpendicular to the first conductor and is not physically connected to it. The shielding effect is simply the result of placing additional conductors in the system and summing the resulting secondary voltages produced in the second conductor from resulting currents in the additional conductors caused by the current in the first conductor. Shield factor is defined as the ratio of the voltage on the second conductor when reduced by secondary induction to the voltage that has not been reduced due to secondary induction. A factor of 1 would mean no shielding, and a factor of 0 would mean total shielding.

$$sf = \frac{\text{voltage shielded}}{\text{voltage unshielded}} \tag{11}$$

The power system usually contains more than one current-carrying conductor, and there are usually several passive conductors in the vicinity that produce some shielding effect. In addition, the power and telecommunications systems usually vary in separation, conductor geometry, current amplitudes, and current phase relationships.

For the most accurate prediction, all currents in all conductors and the mutual impedance between all conductors need to be determined. The products of currents and mutual impedances then predict the individual complex voltage components on each conductor. The net induced-voltage is then determined by summing vectorially all the complex voltages from each current-carrying conductor. While this method is accurate, it is also very tedious.

Another method that is widely used requires summing the complex currents in the power system into one interfering current. Mutual impedance between an imaginary conductor at the geometric mean of the power line conductors and a conductor in the location of interest is computed. A shield factor is computed based on the ratios of mutual- and self-impedance of secondary conductors.

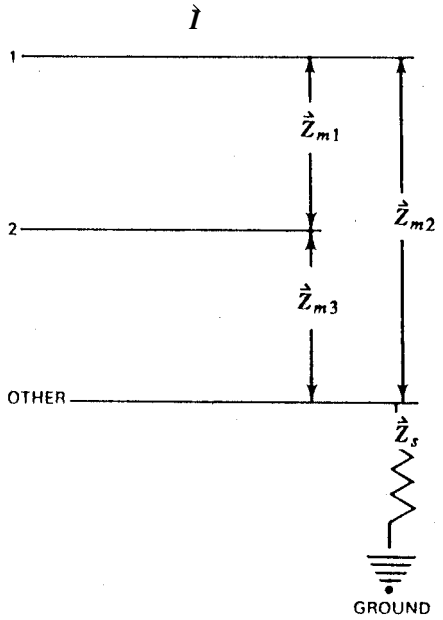

Figure 10—Shielding model

$$sf = \frac{\vec{Z}m_1 - \dfrac{(\vec{Z}m_2 \times \vec{Z}m_3)}{\vec{Z}_s}}{\vec{Z}m_1} \tag{12}$$

where

Copyright The Institute of Electrical and Electronics Engineers, Inc.
Provided by IHS under license with IEEE
No reproduction or networking permitted without license from IHS
Not for Resale

$\hat{I}$ is the current on conductor 1

$\hat{Z}m_1$ is the mutual impedance between conductors 1 and 2

$\hat{Z}m_2$ is the mutual impedance between conductor 1 and other conductors

$\hat{Z}m_3$ is the mutual impedance between conductor 2 and other conductors

Z_s is the total impedance of other conductors (shield self-impedance + end grounds)

The product of the current, mutual impedance, and shield factor produces a complex voltage. The advantage of using an equivalent imaginary conductor carrying the vectorial sum of the power system currents is that the amplitude of the induced voltage can be easily measured and divided by the computed mutual impedance and shield factor. This result can validate the amplitude of the equivalent interfering current on the imaginary conductor:

$$\hat{V}_s = \hat{Z}m \times \hat{I}_i \times s\hat{f} \tag{13}$$

$$\hat{I}_i = \frac{\hat{V}_s}{\hat{Z}m \times s\hat{f}} \tag{14}$$

In addition, this technique is consistent with the method used in mitigation. A probe wire is used to measure induced voltage in the frequency domain and to predict interfering currents on the power line via computed coupling. These currents are then used to predict voltages on a telecommunications cable based on that coupling. The cause-and-effect relationship is demonstrated when the measured induced voltage on the telecommunications facility is equal to that predicted from the power system current.

4.3.2 Environment interface prediction

The method used for prediction of the voltage on the environment interface will be determined by the type of power-line configuration. Generally, distribution-line conductors are close enough together that summing the currents to an imaginary conductor at the geometric mean produces satisfactory results.

For a four-wire wye-connected distribution system:

θ_a is assumed to be 0.

$$\begin{aligned}
&I_a\cos(\theta_a) + j\,I_a\sin(\theta_a)\\
&I_b\cos(\theta_b) + j\,I_b\sin(\theta_b)\\
&I_c\cos(\theta_c) + j\,I_c\sin(\theta_c)\\
&I_n\cos(\theta_n) + j\,I_n\sin(\theta_n)\\
&\overline{I_i\cos(\theta) + j\,I_i\sin(\theta)} = I_i\angle\theta
\end{aligned} \tag{15}$$

for
all current phase angles referenced to I_a

I_a is the current in phase a

I_b is the current in phase b

I_c is the current in phase c

I_n is the current in neutral

I_i is the total interfering current

Copyright The Institute of Electrical and Electronics Engineers, Inc.
Provided by IHS under license with IEEE
No reproduction or networking permitted without license from IHS Not for Resale

$$\vec{V}_t = \vec{Z}m \times \vec{I}_i = V_t \cos(\theta) + j\, V_t \sin(\theta) \quad (16)$$

where

$\vec{V}_t$ is the total induced voltage

$\vec{Z}m$ is the mutual impedance

$\vec{I}_i$ is the total interfering current

A transmission line, on the other hand, usually has the power line conductors sufficiently separated and in a configuration that requires projecting the resulting induced voltage from each conductor and vectorially summing each component for a net resultant voltage:

$$\vec{V}_a = (\vec{Z}m_a) \times (\vec{I}_a) \quad (17)$$

$$\vec{V}_b = (\vec{Z}m_b) \times (\vec{I}_b) \quad (18)$$

$$\vec{V}_c = (\vec{Z}m_c) \times (\vec{I}_c) \quad (19)$$

$$\vec{V}_n = (\vec{Z}m_n) \times (\vec{I}_n) \quad (20)$$

$$\begin{array}{l} V_a\cos(\theta_a) + j\, V_a \sin(\theta_a) \\ V_b\cos(\theta_b) + j\, V_b \sin(\theta_b) \\ V_c\cos(\theta_c) + j\, V_c \sin(\theta_c) \\ V_n\cos(\theta_n) + j\, V_n \sin(\theta_n) \\ \hline V_t\cos(\theta) + j\, V_t \sin(\theta) \end{array} \quad (21)$$

for
all voltage and current phase angles referenced to I_a

$\vec{V}_a$ is the induced voltage from phase a

$\vec{Z}m_a$ is the mutual impedance from phase a

$\vec{I}_a$ is the current in phase a

$\vec{V}_b$ is the induced voltage from phase b

$\vec{Z}m_b$ is the mutual impedance from phase c

$\vec{I}_b$ is current in phase b

$\vec{V}_c$ is the induced voltage from phase c

$\vec{Z}m_c$ is the mutual impedance from phase c

$\vec{I}_c$ is the current in phase c

$\vec{V}_n$ is the induced voltage from neutral

$\vec{Z}m_n$ is the mutual impedance from neutral

Copyright The Institute of Electrical and Electronics Engineers, Inc.
Provided by IHS under license with IEEE
No reproduction or networking permitted without license from IHS
Not for Resale

$\grave{I}_n$ is the current in neutral

$\grave{V}_t$ is the sum of the induced voltage

With the location of the interface chosen at 50 ft (15.24 m) from the geometric mean of a distribution line and 75 ft (22.86 m) from the nearest conductor on the transmission line, only soil resistivity is an unknown in the coupling calculation. The Wenner or four-probe method (figure 11) of measuring and predicting soil resistivity seems to produce acceptable results when the probes are at a spacing of at least 100 ft (30.48 m).

$$\rho = 1.92 \times D \times R \tag{22}$$

where

ρ is the soil resistivity in meter-ohms
D is the distance in feet between the probes
R is the meter-reading resistance in ohms

$$R = \text{volts/amps} \tag{23}$$

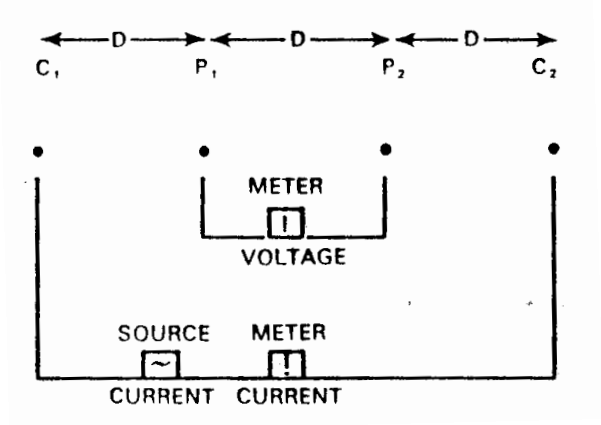

Figure 11—Four-probe measurement configuration

Both fault and steady-state power system currents should be considered. The fault current used should be the inducing fault current described in IEEE Std 367-1987. The steady-state current would be the worst operating condition under which the system would be expected to function that would neither be an emergency condition nor would it exceed the tolerable environment threshold. Since IEEE Std 367-1987 deals with the considerations determining a true fault condition, it will not be repeated here.

Both amplitude and phase relationships of the currents produce the net induced voltage. Different power factors on a three-phase system as a result of single-phase loads can produce a significant induced voltage. Ampere demand-meter readings, in general, do not by themselves provide sufficient data for the prediction of a steady-state worst net interfering-current. Design parameters should be used along with system operating guidelines when determining an environment. One-time probe-wire measurements will reflect the condition at the time of the measurement but reveal nothing about the environment during the projected life of the facility, or even over diurnal load variations.

Copyright The Institute of Electrical and Electronics Engineers, Inc.
Provided by IHS under license with IEEE
No reproduction or networking permitted without license from IHS Not for Resale

4.3.3 Prediction on telecommunication facilities

Once the voltage level on the interface has been determined, an interfering current may be projected to a single imaginary conductor in the power line. Next, an exposure diagram is made showing each change in the geometric configuration of the power and telecommunications systems. If soil resistivity changes over the route, this should also appear on the diagram. Changes in current amplitude or phase angle are included on the diagram. The result is a graphic representation of all the individual discrete exposure sections. The mutual impedance and the resulting unshielded voltage should be computed for each section. The shield factor that describes the cable sheath or other dominant shielding conductors should be computed based on the relative self- and mutual-impedances. The shielded voltage should then be computed for each section. Next, all of the individual complex voltages should be added vectorially, producing the overall induced voltage. Doing this for both the shielded and unshielded voltages will provide a reference to the actual quality of shielding when compared to actual voltage measurements.

$$\begin{aligned} &\boldsymbol{V}t_1\cos(\theta_1) + \boldsymbol{j}\,\boldsymbol{V}t_1\sin(\theta_1)\\ &\boldsymbol{V}t_2\cos(\theta_2) + \boldsymbol{j}\,\boldsymbol{V}t_2\sin(\theta_2)\\ &\boldsymbol{V}t_3\cos(\theta_c) + \boldsymbol{j}\,\boldsymbol{V}t_3\sin(\theta_3)\\ &\boldsymbol{V}t_n\cos(\theta_n) + \boldsymbol{j}\,\boldsymbol{V}t_n\sin(\theta_n)\\ &\overline{\boldsymbol{V}_s\cos(\theta) + \boldsymbol{j}\boldsymbol{V}_s\sin(\theta)} = \boldsymbol{V}_s\angle\theta \end{aligned} \tag{24}$$

where
θ_1 is assumed to be 0.
All current phase angles referenced to θ_1.

$\vec{\boldsymbol{V}}\boldsymbol{t}_1$ is the total induced voltage in section 1

$\vec{\boldsymbol{V}}\boldsymbol{t}_2$ is the total induced voltage in section 2

$\vec{\boldsymbol{V}}\boldsymbol{t}_3$ is the total induced voltage in section 3

$\vec{\boldsymbol{V}}\boldsymbol{t}_n$ is the other section(s) total induced voltage

$\vec{\boldsymbol{V}}_s$ is the total vectorial sum of adjacent sections

Recording the interfering current, mutual impedance, shield factor, and induced voltages on the exposure diagram produces an easily interpreted documentation of the cause-and-effect relationship between the two systems. This information will allow easy analysis of the overall result and the dominant components that produce it. This technique allows for the prediction of induced voltage regardless of the geometric configuration considered, independent of the tolerable threshold at the interface.

4.3.4 Longitudinal currents on the telecommunications cable

Using the center-of-exposure concept, the longitudinal current produced in each uniform exposure section can be predicted (see table A11).

$$\vec{\boldsymbol{I}}_{l(s)} = \frac{\vec{\boldsymbol{V}}_{s(s)} \times \left[1 - \frac{\dot{\boldsymbol{l}}}{\bar{\boldsymbol{l}}}\right]}{\boldsymbol{Z}_l} \tag{25}$$

where

$I_{l(s)}$ is the longitudinal current per section

Copyright The Institute of Electrical and Electronics Engineers, Inc.
Provided by IHS under license with IEEE
No reproduction or networking permitted without license from IHS
Not for Resale

Z_l is equal to $\left(\frac{R_l}{4} + j\frac{1}{2 \times \pi \times f \times C}\right)$

Z_l is the longitudinal impedance

R_l is the total loop resistance

C is the capacitance in farads (about twice the mutual capacitance)

f is the frequency

$V_{s(s)}$ is the shielded voltage in a section

l is the length of facility

$\dot{l}$ is the distance from the center of exposure to grounded end

This prediction is done by assuming the center of each section is the center of the exposure and using the end of the loop for the length. Each of the longitudinal current sections may then be summed together for the total longitudinal current:

$$\begin{array}{l} I_{l(1)}\cos(\theta_1) + j\, I_{l(1)}\sin(\theta_1) \\ I_{l(2)}\cos(\theta_2) + j\, I_{l(2)}\sin(\theta_2) \\ I_{l(s)}\cos(\theta_s) + j\, I_{l(s)}\sin(\theta_s) \\ \overline{I_{l(t)}\cos(\theta_t) + j\, I_{l(t)}\sin(\theta_t)} \end{array} \qquad (26)$$

where

$\grave{I}_{l(1)}$ is the longitudinal current from section 1

$\grave{I}_{l(2)}$ is the longitudinal current from section 2

$\grave{I}_{l(3)}$ is the longitudinal current from section s

$\grave{I}_{l(t)}$ is the total of longitudinal current

The center-of-exposure concept is limited by the wavelength of the propagating current. The accuracy diminishes as the product of the length of the facility and γ (propagation constant) approaches 0.5. This is referred to as the electrically short constraint (esc).

$$\text{esc} = l \times \gamma \qquad (27)$$

where

γ is equal to $\sqrt{R_l \times Y}$

l is the loop length in kft

Y is the longitudinal admittance = $(2 \times \pi \times \mathbf{f} \times C_l)$

f is the frequency

C_l is the capacitance per kft (approximately twice the mutual capacitance)

R_l is the resistance per kft (one-fourth the loop resistance)

Copyright The Institute of Electrical and Electronics Engineers, Inc.
Provided by IHS under license with IEEE
No reproduction or networking permitted without license from IHS Not for Resale

4.3.5 Noise Predictions

Longitudinal and metallic noise may be predicted on telecommunications facilities by one of several techniques. The most rigorous method requires the determination of current at each frequency on the power system. The resulting induced voltage is then predicted by frequency. Each individual voltage is then reduced by the C-message weighting factor in table 3. The individual frequency components are then converted to dBrn and summed with the harmonic power sum shown in 4.2.2.

A simpler but less accurate method assumes the noise to have the same frequency distribution as found in the survey described in 4.2.7. The predicted 60 Hz induced voltage is then reduced by the "quick distribution sum comparison for dB down" values of 4.2.7 to obtain the estimated C-message noise.

Noise metallic is predicted from the longitudinal noise by subtracting the longitudinal balance of the telecommunications facility in dBC from the longitudinal noise level in dBrnC. This produces a metallic noise level in dBrnC as shown in 4.2.2.

5. Coordination within the inductive environment

5.1 General Coordination Methods

General Coordination Methods determine the inductive environment and the ability to tolerate the environment. These methods are those that are readily available for general application to power or telecommunication systems. They are commonly a part of the system or component design. Each organization should apply these methods to its system.

5.1.1

The general methods are applied in the normal design, construction, operation, and maintenance of the plant. This will provide for the operation of both systems within the acceptable environment interface. Costs are borne by each company individually.

5.1.2

General Coordination Methods fall into two categories; those applicable to telecommunication systems, and those applicable to power systems.

5.1.2.1 Telecommunications systems

a) *Longitudinal balance*. These circuits should be designed, built, and maintained to minimize the unbalance of series impedance and admittance-to-earth of the two sides of the circuit. Use of earth as part of the circuit should be avoided if practical.
b) *Susceptiveness*. These circuits should be designed, built, and maintained to minimize malfunctions that may result from the influence of power lines.
c) *Shielding*. Cable shields should be designed, built, and maintained to ensure shielding effectiveness. Adequate shield grounds should be provided.
d) *Conductor configuration*. Closely spaced twisted pairs should be used to minimize differences in induced voltages of each side of the circuit.
e) *Protection*. Circuit protection should be designed, built, and maintained to avoid excessive interruptions, interference, or damage caused by power-line influence.

Copyright The Institute of Electrical and Electronics Engineers, Inc.
Provided by IHS under license with IEEE
No reproduction or networking permitted without license from IHS Not for Resale

5.1.2.2 Power systems

a) *Residual current*. Power circuits and associated apparatus should be designed, built, and maintained to minimize residual currents. Use of earth as part of the circuit should be limited to that caused by grounding of neutral conductors, if practical.
b) *Harmonics*. Transformers and other apparatus should be designed to minimize harmonic generation on the power system. Overvoltages should be limited to avoid excessive saturation of the transformers and resulting distortion of the current wave shape.
c) *Shielding*. Overhead ground wires, if used, should be designed, built, and maintained to ensure their shielding characteristics.
d) *Conductor configuration*. Conductor configurations should be designed, built, and maintained to minimize inductive influence. For example, use of close spacing, transpositions, and cables contribute to reducing influence.
e) *Protection*. Protection and switching apparatus should be built and maintained to minimize transient disturbances and fault clearing times. To reduce susceptibility, protection control circuits should not use earth as part of the circuit.
f) *Harmonic producing loads*. SCR and other harmonic producing systems, apparatus and equipment used by customers should be discussed with them for possible interference before the harmonic-producing apparatuses are connected to the power system.
g) *Load balance*. The power system should be designed, built, and maintained in such a way as to minimize current unbalances in the phase conductors.

5.2 Specific coordination methods

Specific coordination methods are those that are applied to specific situations where General Coordination Methods have been applied and found to be inadequate. This would be the case when the tolerable environment has been exceeded on the environment interface. Methods based on the principle of least total cost should be determined jointly. The latest case study for each inductive exposure situation requiring joint determination of the best engineering solution should be documented and filed in the event that unsatisfactory conditions develop or further additions or changes are necessary.

5.2.1 Allocation of costs

Notification and acceptance of costs associated with specific methods should be arranged prior to starting construction or making changes in construction or operating conditions of facilities involved, or likely to be involved, in an inductive exposure. Arrangements should include cost allocations for future work when incurred and specifically determined to be a part of the best engineering solution in a particular situation. In emergency mitigation of hazardous or severely degraded service conditions, the notice and acceptance of costs should be made as soon as practical after work has started.

The costs to be allocated are net costs, excluding all items of plant improvement and increased facility capacity. Both direct and indirect charges should be computed on a uniform and mutually acceptable basis.

5.2.2 Specific Type A methods

These methods are applied to the most practical extent in conjunction with the general coordination practices to mitigate specific problems. Costs are borne by the company using the method in its plant.

5.2.2.1 Telecommunications systems

a) *Shielding*. Maintaining cable sheath continuity.

Copyright The Institute of Electrical and Electronics Engineers, Inc.
Provided by IHS under license with IEEE
No reproduction or networking permitted without license from IHS Not for Resale

b) *Grounding*. Installing and maintaining adequate cable sheath grounding to maximize shielding effectiveness.

5.2.2.2 Power systems

a) *Shielding*. The continuity and adequate sizing of all neutrals, aerial and buried, and overhead ground conductors should be maintained.
b) *Harmonic generation*. Resonant shunts and filters should be applied to loads that contribute significantly to harmonic generation within the power system. This action may require contractual arrangements with the customer.
c) *Load balance*. Redistribute loads to minimize unbalance.

5.2.3 Specific Type B methods

These should be applied in conjunction with the General and Type A methods to mitigate specific problems as considered essential.

5.2.3.1 Telecommunications

a) *Special devices*. Applying special devices such as ringer isolators, neutralizing transformers, isolation transformers, longitudinal chokes, drainage coils, and special protective devices (e.g., gas tubes) should be considered, if necessary, for coordination only.
b) *Supplementary shielding*. Applying tape armor on cables, iron conduit, and supplementary shield wires for additional shielding should be considered.
c) *Component replacement*. Replacing circuit components that are unbalanced or susceptible with those designed to operate in a higher longitudinal environment should be considered. These items include improved CO relays, repeat coil coupling in place of capacitor coupling, and improved bridge lifters (inductors).
d) *Relocation*. Relocating or rerouting facilities to reduce exposure should be considered.
e) *Special systems*. Using special systems that have a lower susceptibility to inductive exposures should be considered, e.g., a carrier system, radio, or fiber optics, instead of a wire-line facility.
f) *Replacement*. Replace open wire with shielded cable.

5.2.3.2 Power systems

a) *Special Devices*. Special devices, such as booster transformers, phase-reversal transformers, resonant shunts, filters, and special protection should be considered to limit fault current and time duration if necessary for coordination only.
b) *Supplemental Shielding*. Larger sizes or additional neutral and overhead ground conductors should be considered for additional shielding.
c) *Transformers*. Replacing transformers that generate high levels of harmonic currents and connecting transformers phase to phase rather than phase-to-ground should be considered.
d) *Harmonic Propagation*. Relocating or “floating” power-factor correction capacitors or adding a neutral reactor to limit propagation of harmonics along power lines should be considered.
e) *Relocation*. Relocation or rerouting of facilities to reduce inductive exposures should be considered.
f) *Special systems*. Special systems that have less inductive influence should be considered. These could be cable in pipe, concentric neutral cable, or a higher voltage system.
g) *Three phase*. Run second and third phases to reduce 60 Hz induction.

Copyright The Institute of Electrical and Electronics Engineers, Inc.
Provided by IHS under license with IEEE
No reproduction or networking permitted without license from IHS Not for Resale

6. Administrative methods and procedures

This section of the recommended practice will address administrative procedures:

a) For the coordination of normal operations
b) To be followed when telecommunications service has been degraded or interrupted due to an electrical environment in excess of the acceptable threshold at the interface

6.1 Intercompany meetings and contacts

This recommended practice suggests that various power and telecommunications companies in a geographic area meet periodically to identify specific administrative methods that would apply universally regardless of the power and telecommunication companies involved, thus simplifying coordination in a given geographic area. A single point of contact (SPC) within each company should be identified. The names, titles, telephone numbers, and addresses of the SPCs should be updated periodically and distributed to the respective companies. This procedure will aid in the routine and timely handling of facility construction and rearrangement coordination efforts or the mitigation of a specific service problem. The meetings may also include the sharing of technical information and case histories of specific mitigation cases that will benefit the companies collectively.

The allocation of costs for specific mitigation methods may also be resolved as suggested in 5.2.1 at this time.

6.1.1 Normal routine coordination and planning

This recommended practice suggests that the telecommunications company provide the power company with a route map of telecommunications facilities labeling the facilities by the suggested classification system in 4.1.3. The power company would then superimpose their facilities on this map. The classification system would set acceptable threshold limits in various routes. If possible conflicts are identified, representatives of the companies should meet to resolve these conflicts through normal long-range coordinated planning. This coordination may include the agreement to use separate corridors or routes for heavy usage facilities to reduce coupling.

Duplicate copies of route maps should be maintained by both companies and updated as facilities are added or changed. Intercompany-coordinated long-range planning can preclude expensive and complicated mitigation.

Each company should initiate normal maintenance procedures to ensure that its respective facilities meet General Coordination Methods, and each company should monitor its system performance for compliance. The telecommunications company should ensure that the susceptiveness of its facilities will be at a level to provide service within the acceptable environmental thresholds. The power company should ensure that the influence produced by its system operation will maintain an electrical environment consistent with the acceptable environmental thresholds.

This recommended practice suggests that power company customers be held accountable for any excessive distortion or interference produced by their load, including the identification, control, and mitigation of any load-produced distortion or interference. Cogeneration customers are included in these suggestions. To ensure customer compliance, statements to this effect may be placed in conditions of service, power sales contracts, and other documents regulating power service operating conditions.

6.2 Mitigation of specific interference cases

This recommended practice suggests that when interference is identified, the following steps should be followed:

a) The company identifying the interference should
   1) Characterize the interference in the frequency domain on the environmental interface

Copyright The Institute of Electrical and Electronics Engineers, Inc.
Provided by IHS under license with IEEE
No reproduction or networking permitted without license from IHS Not for Resale

2) Define the beginning and ending of the exposure of the telecommunications plant to the electric supply line
3) Document compliance with susceptibility to normal environmental thresholds
4) Document correlation between the environmental interface voltage levels and interference

b) Notification of the SPC with the company causing the interference would be made by the affected company SPC. The notification would include documentation of the information in (a).

c) The SPCs should decide
1) Which tests are to be conducted to determine the cause of the abnormal condition
2) When tests will be made
3) Who will furnish any required testing apparatus
4) When a meeting will be held to determine the best engineering solution. Joint tests are preferable, even if one company representative serves only as an observer

d) The meeting, after the field tests, should determine
1) If additional tests are required [refer to (c)]
2) If the source of the problem has been identified, and if so, can the problem be corrected by General Coordination Methods or must a specific coordination method be incorporated as the best engineering solution? Specific coordination methods and mitigation devices are detailed in IEEE Std 1137-1991.
3) The timeliness of the measure for the solution. Sometimes an interim measure should be employed to restore service until the best engineering solution is implemented.

No specific coordination method will be considered to be the best engineering solution if the respective systems are not being operated by General Coordination Methods.

6.2.1 Joint probe-wire test

When the best engineering solution has been implemented, a joint probe-wire test should be made to ensure compliance with the environmental threshold. If specific methods are employed on the telecommunications system, a mutual and satisfactory agreement should be made among all parties in respect to joint testing and mitigation methods so that adequate service restoration meets the expected standards. Documentation of tests and agreements should be included in a written report and distributed to all interested parties for future reference.

--`,``,,-`-`,,`,,`,`,,`---

Copyright The Institute of Electrical and Electronics Engineers, Inc.
Provided by IHS under license with IEEE
No reproduction or networking permitted without license from IHS Not for Resale

7. Bibliography

[B1] Boneau, D. L., "Special Considerations of Communications Facilities Serving Electric Power Stations," *1981 IEEE International Conference on Electrical Energy*, (# 81CH1666-7), pp. 51-56, Apr. 13-15 1981.

[B2] EPRI EL-3301, "Transmission Lines and Railroad C&S Systems," vol. 1, Oct. 1983.

[B3] Guzik, S. W. and Knowles, A. K. "Using Noise Measurements to Define Conditions Causing Inductive Interference" (IEEE paper).

[B4] Hartman, David P., "Harmonic Measurement Techniques," *IEEE Tutorial—Power Harmonics*, 1984.

[B5] Heirman, Donald, "Time Variations and Harmonic Content of Inductive Interference in Urban/Suburban and Residential/Rural Telephone Plants," *IEEE Transactions on Communications*, vol. Com-23, Dec. 1975.

[B6] IEEE Working Group on Power System Harmonics, "Power Line Harmonic Effects on Communications Line Interference," *IEEE Transactions on Power Apparatus and Systems,* vol. PAS-104, no. 9, Sept. 1985.

[B7] Joint Subcommittee on Development and Research of the National Electric Light Association and the Bell Telephone System, *Engineering Reports*, vol. II (Reports 9-15), Apr. 1932.

[B8] McGranaghan, M. F., "Example Case Illustrating Harmonic Analysis Procedures," *IEEE Tutorial—Power Harmonics*, 1984.

[B9] Ortmeyer, Thomas H., "Harmonic Analysis Methodology," *IEEE Tutorial—Power Harmonics*, 1984.

[B10] Pileggi, David J., Emanuel, Alexander E., and Ortmeyer, Thomas H., "An Examination of Existing Harmonic Recommended Limits, Guides, and Standards," *IEEE Tutorial—Power Harmonics*, 1984.

[B11] "Steady State Response of Well Balanced Pair to Distributed Interference," *BSTJ*, vol. 57, no.3, pp. 653–668, March 1978.

[B12] Szabados, Barna, "Harmonic Measurements: Instruments and Techniques," *IEEE Tutorial—Power Harmonics*, 1984.

[B13] Szabados, Barna, "Solutions to Noise Problems: Identification," *IEEE Tutorial—Power Harmonics*, 1984.

Copyright The Institute of Electrical and Electronics Engineers, Inc.
Provided by IHS under license with IEEE
No reproduction or networking permitted without license from IHS Not for Resale

Annexes

(These informative annexes are not a part of IEEE Std 776-1992, IEEE Recommended Practice for Inductive Coordination of Electric Supply and Communication Lines, but are included for information only.)

Annex A
Example calculations

(informative)

A.1 Prediction calculations

This section of the recommended practice demonstrates how to predict voltages on the probe-wire interface produced by current on a distribution line and on a transmission line. The prediction of voltages and currents on the telephone cable based on the voltages on the probe wire is also presented. An example demonstrating the cause and effect for mitigation is illustrated. The exposure diagram for examples 1, 3, and 4 is shown in figure A1.

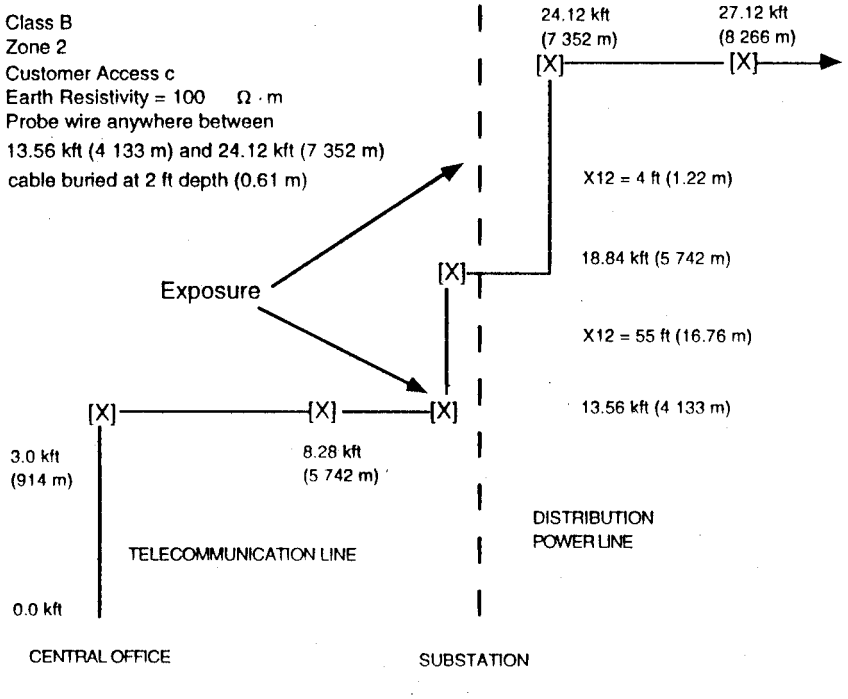

X12 = the horizontal distance between the distribution power line and telecommunications line
kft = cumulative distances in kft from central office (1 kft = 304.8 m)

Figure A1—Exposure diagram for examples 1, 3, and 4

A.1.1 Example 1

The first example demonstrates how to predict the voltage on the probe-wire interface given the amplitude and phase angle of the line current on the three phase conductors of a distribution line (see table A1). In addition to the line current, values are given for the soil resistivity (100 Ω· m); the height of the distribution power line (33 ft [10 m] geometric mean); the height of the probe wire (0 ft); the horizontal distance to the

Copyright The Institute of Electrical and Electronics Engineers, Inc.
Provided by IHS under license with IEEE
No reproduction or networking permitted without license from IHS
Not for Resale

probe wire (37.56 ft [11.45 m]); and the buried cable depth (–2 ft [0.61 m]). (This geometric configuration is equivalent to 50 (15.25 m) radial ft to the geometric mean of distribution-line conductors.)

Table A1—Example 1
Current on three-phase distribution line

f (Hz)	Phase A (A)	Phase B (A)	Phase C (A)
60	15.1100 ∠ 0	19.0900 ∠ 159	29.9600 ∠ 52
120	0.0549 ∠ 0	0.0245 ∠ 148	0.0955 ∠ 123
180	0.7079 ∠ 0	0.7943 ∠ 33	0.6166 ∠ 31
240	0.0358 ∠ 0	0.0086 ∠ 118	0.0518 ∠ –169
300	0.6309 ∠ 0	0.8317 ∠ –67	1.2020 ∠ 62
360	0.0097 ∠ 0	0.0057 ∠ 138	0.0206 ∠ 79
420	0.2660 ∠ 0	0.3589 ∠ 171	0.3846 ∠ 43
480	0.0064 ∠ 0	0.0041 ∠ –138	0.0197 ∠ –11
540	0.1000 ∠ 0	0.0699 ∠ –199	0.1303 ∠ 153
600	0.0031 ∠ 0	0.0031 ∠ –189	0.0100 ∠ 152
660	0.0305 ∠0	0.0141 ∠ 47	0.0371 ∠ 174
720	0.0053 ∠0	0.0076 ∠ –153	0.0139 ∠ 128
780	0.0162 ∠0	0.0086 ∠ –21	0.0363 ∠ –144
840	0.0031 ∠0	0.0031 ∠ 182	0.0100 ∠ 87
900	0.0042 ∠0	0.0130 ∠ 191	0.0141 ∠ –141
960	0.0032 ∠0	0.0081 ∠ 118	0.0130 ∠ –158
1020	0.0128 ∠0	0.0213 ∠ –103	0.0295 ∠ 11

NOTE—These are actual measurements referenced to phase A. After the measurements were taken, a capacitor was found located on a single phase tap.

Using equation 15, the example provides the values for frequencies between 60 Hz and 1020 Hz.

Copyright The Institute of Electrical and Electronics Engineers, Inc.
Provided by IHS under license with IEEE
No reproduction or networking permitted without license from IHS Not for Resale

Table A2 provides the sum of complex current from table A1.

Table A2—Example 1
Zero sequence current, neutral current, and calculated interfering current from a distribution line

f (Hz)	Zero sequence current * (A)	Measured neutral current* (A)	Interfering current (A)
60	34.3 ∠ 62.5	10.9 ∠ 242.5	23.38 ∠ 62.5
120	0.0931 ∠ 100.88	0.0334 ∠ –79.12	0.0597 ∠ 100.88
180	2.0450 ∠ 21.57	0.7586 ∠ 201.50	1.294 ∠ 21.57
240	0.0192 ∠ –173.16	0.0073 ∠ 6.84	0.0119 ∠ –173.16
300	1.5470 ∠ 11.10	0.5076 ∠ 191.10	1.040 ∠ 11.1
360	0.0258 ∠ 68.60	0.0107 ∠ 242.60	0.0151 ∠ 68.6
420	0.3726 ∠ 58.51	0.1318 ∠ 238.50	0.2408 ∠ 58.51
480	0.0236 ∠ –15.99	0.0091 ∠ 164.00	0.0145 ∠ –15.99
540	0.1160 ∠ 135.10	0.0380 ∠ 315.10	0.07 ∠ 135.1
600	0.0102 ∠ 149.49	0.0031 ∠ 329.49	0.0071 ∠ 149.49
660	0.0146 ∠ 77.22	0.0031 ∠ –102.78	0.0115 ∠ 77.22
720	0.0125 ∠ 143.20	0.0038 ∠ 323.20	0.0087 ∠ 143.20
780	0.0250 ∠ –101.88	0.0058 ∠ 281.88	0.0192 ∠ –101.88
840	0.0100 ∠ 86.96	0.0031 ∠ –93.04	0.0069 ∠ 86.96
900	0.0226 ∠ –149.80	0.0082 ∠ 30.20	0.0144 ∠ –149.8
960	0.0129 ∠ 169.80	0.0038 ∠ 349.80	0.0091 ∠ 169.8
1020	0.0400 ∠ –22.3	0.0133 ∠ 157.70	0.0267 ∠ –22.3

* The neutral current is 180° out of phase with zero sequence current.

Copyright The Institute of Electrical and Electronics Engineers, Inc.
Provided by IHS under license with IEEE
No reproduction or networking permitted without license from IHS
Not for Resale

Table A3 provides the mutual impedance calculated using the mutual impedance algorithm found in IEEE Std 367-1987 between the probe-wire interface and the geometric mean of the distribution power line. The voltage on the probe wire is computed using equation 10 by taking the product of the complex interfering current and the mutual impedance. The *sf* is taken to be 1 for the probe wire.

Table A3—Example 1
Mutual impedance and calculated voltage on probe-wire interface

f	Interfering current (A)	Mutual impedance	Probe-wire voltage	Table 2 voltage > 3 harm Zone 2	Table 2 voltage < = 3 harm Zone 2	Calculated equivalent > 3 harm interfering
(Hz)		(Ω)	(V)	(V)	(V)	
60	23.38 ∠ 62.5	0.0094 ∠ 79	0.220	> 0.100	> 0.100	10.6383
120	0.0597 ∠ 100.88	0.017 ∠ 78	0.001	< 0.015	< 0.0250	0.882 353
180	1.294 ∠ 21.57	0.025 ∠ 78	0.032	> 0.0051	> 0.0111	0.204
240	0.0119 ∠ –173.16	0.032 ∠ 77	0.0004	< 0.0024	< 0.006 25	0.075
300	1.040 ∠ 11.1	0.038 ∠ 77	0.040	> 0.0013	< 0.004 00	0.034 211
360	0.0151 ∠ 68.6	0.045 ∠ 76	0.0007	< 0.000 79	< 0.002 78	0.017 556
420	0.2408 ∠ 58.51	0.051 ∠ 76	0.0123	> 0.000 52	> 0.002 04	0.010 196
480	0.0145 ∠ –15.99	0.057 ∠ 76	0.0008	> 0.000 36	< 0.001 56	0.006 316
540	0.07 ∠ 135.1	0.063 ∠ 76	0.0044	> 0.000 27	> 0.001 23	0.004 286
600	0.0071 ∠ 149.49	0.069 ∠ 75	0.0005	> 0.000 20	< 0.001 00	0.002 899
660	0.0115 ∠ 77.22	0.075 ∠ 75	0.0009	> 0.000 15	< 0.000 826	0.002
720	0.0087 ∠ 143.20	0.080 ∠ 75	0.0007	> 0.000 12	> 0.000 694	0.0015
780	0.0192 ∠ –101.88	0.086 ∠ 75	0.0017	> 0.000 098	> 0.000 592	0.001 14
840	0.0069 ∠ 86.96	0.091 ∠ 75	0.0006	> 0.000 080	> 0.000 510	0.000 879
900	0.0144 ∠ –149.8	0.097 ∠ 75	0.0043	> 0.000 067	> 0.000 444	0.000 691
960	0.0091 ∠ 169.8	0.102 ∠ 74	0.0009	> 0.000 056	> 0.000 391	0.000 549
1020	0.0267 ∠ –22.3	0.107 ∠ 74	0.0029	> 0.000 048	< 0.000 346	0.000 449

The telecommunications facility is designated Type B, Zone 2, and customer access c.
Fault conditions on the probe wire:
fault current=1000 A
duration = 1.33 s
$V = 1000 \cdot 0.009 = 9$ V on probe wire

Copyright The Institute of Electrical and Electronics Engineers, Inc.
Provided by IHS under license with IEEE
No reproduction or networking permitted without license from IHS Not for Resale

First, a comparison is made in table A3 between the voltage on the probe wire and the values in table 2 in order to determine if the environmental threshold is exceeded. Second, a comparison between the predicted voltage on a probe wire and the energy dissipation from table 1 is made to determine the acceptability of the resulting environment.

a) The 60 Hz component (0.2105 V) is above the Zone 2 acceptable threshold (0.100 V) for safety and circuit degradation in table 1.
b) Circuit degradation exceeds the acceptable threshold on most of the frequency components, as shown in table A3. This assumes a 50 kft uniform exposure.

A.1.2 Example 2

The second example predicts probe-wire interface voltages from a transmission line.

Assume

100 A ∠ 0° on Phase A
95 A ∠ 120° on Phase B
105 A ∠ –120° on Phase C
$n^{-1.7}$ is the harmonic distribution
sf is equal to 1
even harmonics are assumed to be 20 dB below $n^{-1.7}$

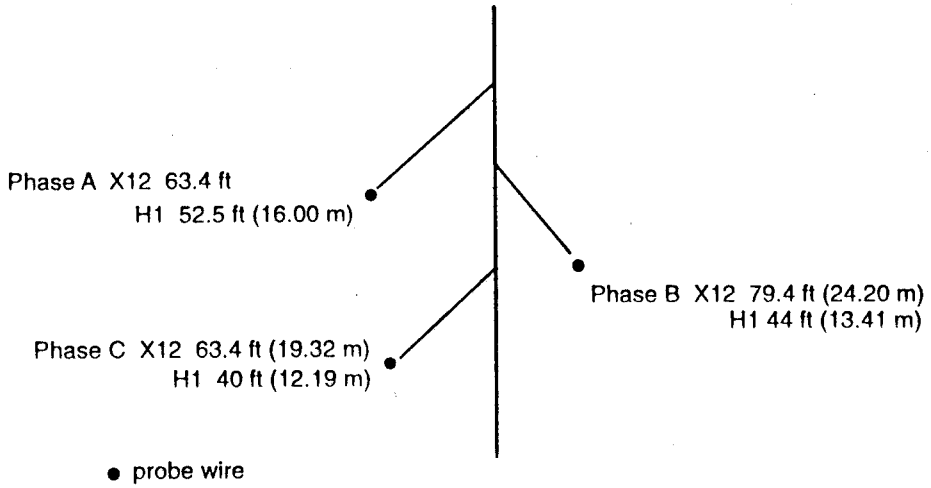

Figure A2—Configuration of transmission line and probe wire

Copyright The Institute of Electrical and Electronics Engineers, Inc.
Provided by IHS under license with IEEE
No reproduction or networking permitted without license from IHS
Not for Resale

Table A4—Example 2
Mutual impedance, phase A current, and predicted probe-wire voltage from phase A on a transmission line

Harmonic		Mutual impedance	Power line current	Probe wire	
n	*f* (Hz)	(Ω)	(A)	Voltage (V) Polar	Voltage (V) Rectangular
1	60	0.008 ∠ 78	100.00 ∠ 0	0.8000 ∠ 78	0.1663+j0.7825
2	120	0.015 ∠ 77	3.10 ∠ 0	0.0465 ∠ 77	0.0105+j0.0453
3	180	0.021 ∠ 76	15.40 ∠ 0	0.3240 ∠ 76	0.0784+j0.3144
4	240	0.027 ∠ 75	0.95 ∠ 0	0.0257 ∠ 75	0.0067+j0.0248
5	300	0.033 ∠ 75	6.50 ∠ 0	0.2145 ∠ 75	0.0555+j0.2072
6	360	0.038 ∠ 74	0.48 ∠ 0	0.0182 ∠ 74	0.0050+j0.0175
7	420	0.043 ∠ 74	3.70 ∠ 0	0.1591 ∠ 74	0.0439+j0.1529
8	480	0.048 ∠ 74	0.29 ∠ 0	0.0139 ∠ 74	0.0038+j0.0134
9	540	0.053 ∠ 73	2.40 ∠ 0	0.1272 ∠ 73	0.0372+j0.1216
10	600	0.058 ∠ 73	0.20 ∠ 0	0.0116 ∠ 73	0.0034+j0.0111
11	660	0.063 ∠ 73	1.70 ∠ 0	0.1071 ∠ 73	0.0313+j0.1024
12	720	0.067 ∠ 73	0.15 ∠ 0	0.0101 ∠ 73	0.0030+j0.0097
13	780	0.072 ∠ 72	1.30 ∠ 0	0.0936 ∠ 72	0.0289+j0.0890
14	840	0.076 ∠ 72	0.11 ∠ 0	0.0084 ∠ 72	0.0026+j0.0080
15	900	0.08 ∠ 72	1.00 ∠ 0	0.0810 ∠ 72	0.0250+j0.0770
16	960	0.085 ∠ 72	0.09 ∠ 0	0.0077 ∠ 72	0.0024+j0.0073
17	1020	0.089 ∠ 72	0.80 ∠ 0	0.0712 ∠ 72	0.0220+j0.0677

--`,`,`,,`-`-`,,`,,`,`,,`---

Copyright The Institute of Electrical and Electronics Engineers, Inc.
Provided by IHS under license with IEEE
No reproduction or networking permitted without license from IHS Not for Resale

Table A5—Example 2
Mutual impedance, Phase B current, and predicted probe-wire voltage from Phase B on a transmission line

Harmonic		Mutual impedance	Power line current	Probe wire	
n	***f*** **(Hz)**	(Ω)	**(A)**	**Voltage (V) Polar**	**Voltage (V) Rectangular**
1	60	0.008 ∠ 77	95.00 ∠120	0.7600 ∠ 197	–0.7268–j0.2222
2	120	0.015 ∠ 76	2.90 ∠ 240	0.0435 ∠ 316	0.0313–j0.0302
3	180	0.021 ∠ 75	14.20 ∠ 360	0.2982 ∠ 435	0.0772+j0.2880
4	240	0.026 ∠ 75	0.90 ∠ 480	0.0234 ∠ 555	–0.0226–j0.0061
5	300	0.031 ∠ 74	6.20 ∠ 600	0.1922 ∠ 674	0.1335–j0.1383
6	360	0.037 ∠ 74	0.48 ∠ 720	0.0178 ∠ 794	0.0049+j0.0171
7	420	0.042 ∠ 73	3.50 ∠ 840	0.1470 ∠ 913	–0.1432–j0.0331
8	480	0.047 ∠ 73	0.26 ∠ 960	0.0129 ∠ 1033	0.0088–j0.0094
9	540	0.051 ∠ 73	2.30 ∠ 1080	0.1173 ∠ 1153	0.0343+j0.1122
10	600	0.056 ∠ 72	0.19 ∠ 1200	0.0106 ∠ 1272	–0.0104–j0.0022
11	660	0.06 ∠ 72	1.60 ∠ 1320	0.0960 ∠ 1392	0.0642–j0.0713
12	720	0.065 ∠ 72	0.10 ∠ 1440	0.0064 ∠ 1512	0.0020+j0.0061
13	780	0.069 ∠ 71	1.20 ∠ 1560	0.0826 ∠ 1631	–0.0811–j0.0158
14	840	0.073 ∠ 71	0.10 ∠ 1680	0.0073 ∠ 1751	0.0048–j0.0055
15	900	0.077 ∠ 71	0.90 ∠ 1800	0.0693 ∠ 1871	0.0226+j0.0655
16	960	0.081 ∠ 71	0.08 ∠ 1920	0.0070 ∠ 1991	–0.0069–j0.0013
17	1020	0.085 ∠ 71	0.80 ∠ 2040	0.0680 ∠ 2111	0.0446–j0.0513

Copyright The Institute of Electrical and Electronics Engineers, Inc.
Provided by IHS under license with IEEE
No reproduction or networking permitted without license from IHS
Not for Resale

Table A6—Example 2
Mutual impedance, phase C current, and predicted probe-wire voltage from phase C on a transmission line

Harmonic		Mutual impedance	Power line current	Probe wire	
n	***f*** **(Hz)**	**(Ω)**	**(A)**	**Voltage (V) Polar**	**Voltage (V) Rectangular**
1	60	0.009 ∠ 78	105.00 ∠ –120	0.9450 ∠–42	0.7023–j0.6323
2	120	0.015 ∠ 77	3.20 ∠ –240	0.0480 ∠ –163	–0.0459–j0.0140
3	180	0.022 ∠ 76	15.70 ∠ –360	0.3454 ∠ –284	0.0836+j0.3351
4	240	0.028 ∠ 76	1.0 ∠ –480	0.0280 ∠ –404	–0.0201–j0.0195
5	300	0.034 ∠ 75	6.8 ∠ –600	0.2312 ∠ –525	–0.2233–j0.0598
6	360	0.039 ∠ 75	0.50 ∠ –720	0.0195 ∠ –645	0.0050+j0.0188
7	420	0.045 ∠ 74	3.90 ∠ –840	0.1755 ∠ –766	0.1219–j0.1262
8	480	0.05 ∠ 74	0.31 ∠ –960	0.0155 ∠ 886	–0.0150–j0.0037
9	540	0.055 ∠ 74	2.50 ∠ –1080	0.1375 ∠ –1006	0.0379+j0.1322
10	600	0.06 ∠ 73	0.21 ∠ –1200	0.0126 ∠ –1127	0.0086–j0.0092
11	660	0.065 ∠ 73	1.9 ∠ –1320	0.1170 ∠ –1247	–0.1140–j0.0263
12	720	0.07 ∠ 73	0.20 ∠ –1440	0.0410 ∠ –1367	0.0120+j0.0392
13	780	0.074 ∠ 73	1.40 ∠ –1560	0.1036 ∠ –1487	0.0707–j0.0758
14	840	0.079 ∠ 72	0.10 ∠ –1680	0.0095 ∠ –1608	–0.0093–j0.0020
15	900	0.083 ∠ 72	1.00 ∠ –1800	0.0830 ∠ –1728	0.0256+j0.0789
16	960	0.088 ∠ 72	0.0 ∠ –1920	0.0084 ∠ –1848	0.0056–j0.0062
17	1020	0.092 ∠ 72	0.85 ∠ –2040	0.0782 ∠ –1968	–0.0765–j0.0163

Copyright The Institute of Electrical and Electronics Engineers, Inc.
Provided by IHS under license with IEEE
No reproduction or networking permitted without license from IHS
Not for Resale

After the complex voltages have been determined on the probe wire from each phase on the power system, the voltages for all frequencies must be summed vectorially using equation 21, as follows for 60 Hz.

Summation example
Phase A = 0.1663 + j0.7825 V at 60 Hz Phase B = –0.7268 – j0.2222 V at 60 Hz Phase C = 0.7023 – j0.6323 V at 60 Hz
Total = 0.1418 – j0.0720 V at 60 Hz = 0.1590 V ∠ –26.92°

Table A7—Example 2
Sum of probe-wire voltages from table A4, table A5, and table A6 compared to table 2 voltages

Harmonics		Voltage sum > 3 harmonics on probe wire		Table 2 voltage	
n	***f*** **(Hz)**	**Rectangular (V)**	**Polar (V)**	**Zone 2 (V)**	**Zone 1 (V)**
1	60	0.141 81–j0.0720	0.1590 ∠ 26.92	> 0.100	< 0.333
2	120	–0.00 415+j0.0011	0.0043 ∠ 165.15	< 0.015	< 0.051
3	180	0.239 12+j0.9376	0.9676 ∠ 75.69	> 0.0051	> 0.017
4	240	0.004 19–j0.0007	0.0042 ∠ –9.25	> 0.0024	> 0.0079
5	300	–0.034 29+j0.0091	0.0355 ∠ 165.14	> 0.0013	> 0.0043
6	360	0.014 97+j0.0534	0.0555 ∠ 74.35	> 0.00079	> 0.0026
7	420	0.022 53–j0.0064	0.0234 ∠ –15.80	> 0.00052	> 0.0017
8	480	–0.00241+j0.0002	0.0024 ∠ 175.24	> 0.000 36	> 0.0012
9	540	0.10939+j0.3660	0.3820 ∠ 73.36	> 0.000 27	> 0.000 88
10	600	0.00162–j0.0003	0.0016 ∠ –11.40	> 0.000 20	> 0.000 66
11	660	–0.01845+j0.0048	0.0191 ∠ 165.54	> 0.000 15	> 0.000 51
12	720	0.01692+j0.0550	0.0575 ∠ 72.89	> 0.000 12	> 0.000 41
13	780	0.01850–j0.0025	0.0187 ∠ –7.73	> 0.000 098	> 0.000 33
14	840	–0.00191+j0.0005	0.0020 ∠165.19	> 0.000 084	> 0.000 27
15	900	0.07324+j0.2215	0.2333 ∠ 71.70	> 0.000 067	> 0.000 22
16	960	0.00113–j0.0003	0.0012 ∠ –12.73	> 0.000 057	> 0.000 19
17	1020	–0.00988+j0.0001	0.0099 ∠ 179.21	> 0.000 048	> 0.000 16

The voltage sums included in table A7 also exceed the acceptable environmental threshold set in table 2, also included in Table A7.

Copyright The Institute of Electrical and Electronics Engineers, Inc.
Provided by IHS under license with IEEE
No reproduction or networking permitted without license from IHS
Not for Resale

A.1.3 Example 3

The third example predicts induced voltages and noise on a telecommunication cable from probe-wire measurements in dBrn. Phase angles are omitted because they are not normally measured. Therefore, the phase angle of the interfering current is not used in this example. The exposure diagram used is shown in figure A1. The same mutual impedances for the probe wire calculated in example 1 are used for example 3.

Table A8—Example 3
dBrn and voltage levels on a probe wire, mutual impedance between probe wire and imaginary power-line conductor at geometric mean of power line, and the interfering current on the imaginary conductor

f	Probe wire levels		Mutual impedance	Interfering current
(Hz)	(dBrn)	(V)	(Ω)	(A)
60	59	0.0218	0.009	2.4
120	32	0.001 00	0.017	0.058
180	65	0.044 00	0.025	1.76
240	26	0.000 48	0.032	0.015
300	59	0.021 80	0.038	0.573
360	35	0.001 40	0.045	0.031
420	61	0.027 00	0.051	0.529
480	32	0.001 00	0.057	0.0175
540	63	0.035 00	0.063	0.556
600	27	0.000 50	0.069	0.0072
660	41	0.002 70	0.075	0.036
720	11	0.000 09	0.080	0.0011
780	27	0.000 55	0.086	0.0064
840	14	0.000 12	0.091	0.0013
900	33	0.001 00	0.097	0.0103
960	19	0.000 20	0.102	0.002
1020	22	0.000 30	0.107	0.0028

To convert from dBrn to volts use the following:

$$v = \left(10^{\frac{dBrn}{20}}\right) \times 24.5 \times 10^{-6}$$

Copyright The Institute of Electrical and Electronics Engineers, Inc.
Provided by IHS under license with IEEE
No reproduction or networking permitted without license from IHS Not for Resale

To calculate interfering current, divide the voltage on the probe wire by the calculated mutual impedance between the probe wire and the imaginary conductor at the geometric mean of the power-line conductors.

Coupling between telecommunications cable and power line:

Section 1	**Section 2**
H1 = 33 ft (10.06 m)	H1 = 33 ft (10.06 m)
H2 = –2 ft (–0.61 m)	H2 = –2 ft (–0.61 m)
X12 = 55 ft (16.76 m)	X12 = 4 ft (1.22 m)
ρ = 100 Ω· m	ρ = 100 Ω· m
length = 5.28 kft (1609 m)	length = 5.28 kft (1609 m)

--`,`,,-`-`,,`,,`,`,,`---
Copyright The Institute of Electrical and Electronics Engineers, Inc.
Provided by IHS under license with IEEE
No reproduction or networking permitted without license from IHS
Not for Resale

Table A9—Example 3
Mutual impedances from the exposure diagram in figure A1

f	Section 1 Mutual impedance	Section 2 Mutual impedance	Sums Mutual impedance
(Hz)	(Ω)	(Ω)	(Ω)
60	0.466 ∠ 78	0.531 ∠ 79	1.4630 ∠ 79
120	0.850 ∠ 77	0.997 ∠ 79	1.8466 ∠ 78
180	1.204 ∠ 77	1.423 ∠ 79	2.6273 ∠ 78
240	1.539 ∠ 76	1.830 ∠ 78	3.3687 ∠ 77
300	1.859 ∠ 76	2.223 ∠ 78	4.0810 ∠ 77
360	2.168 ∠ 75	2.604 ∠ 78	4.7702 ∠ 77
420	2.467∠ 75	2.975 ∠ 77	5.4404 ∠ 76
480	2.758 ∠ 75	3.338 ∠ 77	6.0943 ∠ 76
540	3.042 ∠ 74	3.694 ∠ 77	6.7340 ∠ 76
600	3.320 ∠ 74	4.043 ∠ 77	7.3611 ∠ 76
660	3.592 ∠ 74	4.387∠ 77	7.9769 ∠ 75
720	3.859 ∠ 74	4.726 ∠ 77	8.5826 ∠ 75
780	4.122 ∠ 73	5.060 ∠ 76	9.1789 ∠ 75
840	4.380 ∠ 73	5.390 ∠ 76	9.7666 ∠ 75
900	4.635 ∠ 73	5.716 ∠ 76	10.3463 ∠ 75
960	4.885 ∠ 73	6.038 ∠ 76	10.9186 ∠ 75
1020	5.132 ∠ 73	6.356 ∠ 76	11.4840 ∠ 74

Notice how the increase in separation in section 1 caused the mutual impedance between the telecommunication cable and the power line in section 1 to be less than the mutual impedance in section 2.

Copyright The Institute of Electrical and Electronics Engineers, Inc.
Provided by IHS under license with IEEE
No reproduction or networking permitted without license from IHS
Not for Resale

Table A10—Example 3
Predicted voltage and C-message noise-to-ground on a telecommunications cable

f	Unshielded voltage	Noise-to-Ground	Shield factor*	Shielded voltage	Noise-to-ground	
(Hz)	(V)	(dBrn)		(V)	(dBrn)	(dBrnC)
60	2.2390	100	0.91	2.0370	98.4	42.7
120	0.1041	73	0.81	0.0843	70.7	35.3
180	4.6530	106	0.70	3.2570	102.4	72.8
240	0.0523	67	0.61	0.0319	62.3	41.9
300	2.3340	100	0.53	1.2370	94.1	77.6
360	0.1473	76	0.47	0.0692	69.0	55.9
420	2.9400	102	0.42	1.2350	94.0	81.8
480	0.1043	73	0.38	0.0396	64.2	56.2
540	3.7020	104	0.34	1.2590	94.2	88.0
600	0.0586	68	0.31	0.0184	57.4	52.9
660	0.2942	82	0.29	0.0853	70.8	67.5
720	0.0093	52	0.27	0.0025	40.2	37.9
780	0.0587	68	0.25	0.0147	55.5	54.2
840	0.0131	55	0.23	0.0030	41.8	41.0
900	0.1172	74	0.22	0.0258	60.4	60.1
960	0.0234	60	0.20	0.0047	45.6	45.4
1020	0.0330	63	0.19	0.0063	48.2	48.2

* Equation 12 may be used to calculate shield factor.

The power sum of the C-message weighted noise-to-ground is commonly referred to as power influence (PI).

PI = 89.4 dBrnC

With a longitudinal balance of 60 dBC, the circuit noise would be equal to

89.4 dBrnC – 60 dBC = 29.4 dBrnC

This example produces values that are just below the thresholds listed in IEEE Std 820-1984 as not recommended:

PI > 90 dBrnC

circuit noise > 30 dBrnC

This condition results from only a 2 mi (3.22 km) exposure, which is two-thirds of Zone 1 and one-fifth of Zone 2 in length.

Copyright The Institute of Electrical and Electronics Engineers, Inc.
Provided by IHS under license with IEEE
No reproduction or networking permitted without license from IHS
Not for Resale

The prediction of longitudinal current may be done using equation 25 as follows:

Table A11—Example 3
Longitudinal current predictions on telecommunications cable

f	l_i	Zm_1	V_{i1}	Zm_2	V_{i2}	sf	Z_l	l_{l1}	l_{l2}	l_{lT}
(Hz)	**(A)**	(Ω)	**(V)**	(Ω)	**(V)**		(Ω)	**(A)**	**(A)**	**(A)**
60	2.400	0.466	1.017 74	0.539	1.177 18	0.91	3123.0	1.9457E–04	2.9855E–04	0.000 493 12
120	0.058	0.850	0.039 93	0.997	0.046 84	0.81	1573.0	1.5153E–05	2.3579E–05	3.8732E–05
180	1.760	1.204	1.483 33	1.423	1.753 14	0.70	1062.0	8.3393E–04	1.3076E–03	0.002 141 47
240	0.015	1.539	0.014 08	1.830	0.016 75	0.61	809.9	1.0380E–05	1.6374E–05	2.6755E–05
300	0.573	1.859	0.564 56	2.223	0.675 10	0.53	661.5	5.0951E–04	8.0829E–04	0.001 317 8
360	0.031	2.168	0.031 59	2.604	0.037 94	0.47	564.8	3.3389E–05	5.3202E–05	8.6591E–05
420	0.529	2.467	0.548 12	2.975	0.660 99	0.42	497.4	6.5787E–04	1.0525E–03	0.001 710 35
480	0.0175	2.758	0.0183	3.338	0.022 20	0.38	448.4	2.4419E–05	3.9207E–05	6.3626E–05
540	0.556	3.042	0.575 06	3.694	0.698 31	0.34	411.4	8.3449E–04	1.3444E–03	0.002 178 84
600	0.007	3.320	0.007 41	4.043	0.009 02	0.31	382.7	1.1560E–05	1.8675E–05	3.0235E–05
660	0.036	3.592	0.037 50	4.387	0.04 580	0.29	360.1	6.2171E–05	1.0073E–04	0.000 162 9
720	0.001	3.859	0.001 15	4.726	0.001 40	0.27	341.8	2.0019E–06	3.2524E–06	5.2543E–06
780	0.006	4.122	0.006 60	5.060	0.008 10	0.25	326.9	1.2044E–05	1.9615E–05	3.1659E–05
840	0.001	4.380	0.001 31	5.390	0.001 61	0.23	314.6	2.4852E–06	4.0572E–06	6.5424E–06
900	0.010	4.635	0.010 50	5.716	0.012 95	0.22	304.3	2.0605E–05	3.3711E–05	5.4317E–05
960	0.002	4.885	0.001 95	6.038	0.002 42	0.20	295.6	3.9463E–06	6.4710E–06	1.0417E–05
1020	0.003	5.132	0.002 73	6.356	0.003 38	0.19	288.2	5.6556E–06	9.2924E–06	1.4948E–05

The following are the values used to evaluate Z_l:

$\dot{l}$ = 18.84 kft (5742 m)
l = 27.12 kft (8266 m)
R_l = 32.8 Ω/kft (0.1076 Ω/m)
C_l = 0.166 μF/mi = 0.0314 μF/kft (10 310^{-6} μF/m)

Because the currents are at different frequencies and no knowledge of coherence is available, a root-sum-square (RSS) is taken for an approximate total longitudinal current.

current equivalent = 3.78 mA

Note that while the voltage induced at 180 Hz is more than twice the voltage induced at 540 Hz, these voltages are approximately equal contributors to the total current.

Note that several of the frequency components exceed the esc, introducing the possibility of error.

Copyright The Institute of Electrical and Electronics Engineers, Inc.
Provided by IHS under license with IEEE
No reproduction or networking permitted without license from IHS Not for Resale

A.2 Mitigation calculations

A.2.1 Example 4

The fourth example illustrates mitigation calculations. The first step in mitigation is to obtain conclusive results proving cause and effect. This is usually done by measuring the effect, then measuring the cause, and then calculating the effect. When the measured effect and the calculated effect are the same or within variations accounted for in test set sensitivity, the cause and effect have been proven.

This technique will be demonstrated by using the exposure diagram in figure A1 assuming a power distribution line. The power system provides one interference section on the telecommunications cable with one change in exposure due to geometry. The same mutual impedance computed in example 3 will be used.

Voltages measured on the cable pair are given in table A12, and voltages measured on the probe wire are given in table A13. The comparison of the predicted voltage on the cable pair and the actual measured voltage on the cable pair is given in table A14.

Table A12—Example 4
Measured values on a cable pair

f	Noise-to-ground		Voltage-to-ground	Noise metallic	Longitudinal balance
(Hz)	(dBrnC)	(dBrn)	(V)	(dBrn)	(dB)
60	59.3	115	13.78	39	76
120	44.5	80	0.25	5	75
180	70.4	100	2.54	26	74
240	56.8	78	0.19	5	73
300	80.5	97	1.73	25	72
360	54.9	68	0.06	–3	71
420	81.8	92	0.98	28	70
480	61.0	69	0.07	0	69
540	83.8	90	0.77	22	68
600	72.5	77	0.17	10	67
660	83.7	87	0.55	21	66
720	71.7	74	0.12	9	65
780	84.7	86	0.49	22	64
840	61.2	62	0.03	–1	63
900	79.7	80	0.25	18	62
960	57.8	58	0.02	–3	61
1020	77.0	77	0.17	17	60

--`,``,-`-`,,`,,`,`,,`---

Copyright The Institute of Electrical and Electronics Engineers, Inc.
Provided by IHS under license with IEEE
No reproduction or networking permitted without license from IHS
Not for Resale

Table A13—Example 4
Calculated interfering current from measured probe-wire voltage

f	Probe wire		Mutual impedance	Interfering current
(Hz)	(dBrn)	(V)	(Ω)	(A)
60	76.2	159.0 E–3	0.009	16.86
120	43.8	3.8 E–3	0.017	0.219
180	63.6	37.0 E–3	0.025	1.504
240	42.9	3.4 E–3	0.032	0.108
300	62.5	32.6 E–3	0.038	0.854
360	36.3	1.6 E–3	0.045	0.036
420	59.6	23.4 E–3	0.051	0.460
480	38.7	2.1 E–3	0.057	0.037
540	57.7	18.8 E–3	0.063	0.299
600	47.8	6.0 E–3	0.069	0.087
660	57.1	17.5 E–3	0.075	0.235
720	48.5	6.5 E–3	0.080	0.081
780	57.7	18.7 E–3	0.086	0.218
840	37.3	1.8 E–3	0.091	0.019
900	54.3	12.7 E–3	0.097	0.131
960	33.8	1.2 E–3	0.102	0.012
1020	50.6	8.3 E–3	0.107	0.077

Copyright The Institute of Electrical and Electronics Engineers, Inc.
Provided by IHS under license with IEEE
No reproduction or networking permitted without license from IHS Not for Resale

Table A14—Example 4
Comparison of calculated and measured voltages on the telecommunications cable

	Calculated effect					Measured effect
f	Mutual impedance	Interfering current	Shield factor	Shielded voltage	Noise-to-ground	Noise-to-ground
(Hz)	(Ω)	(A)		(V)	(dBrn)	(dBrn)
60	1.005	16.860	0.91	15.410	115.4	115
120	1.847	0.219	0.81	0.328	82.5	80
180	2.627	1.504	0.70	2.763	101.0	100
240	3.369	0.108	0.61	0.222	79.1	78
300	4.081	0.854	0.53	1.847	97.6	97
360	4.770	0.036	0.47	0.081	70.4	68
420	5.440	0.460	0.42	1.051	92.7	92
480	6.094	0.037	0.38	0.086	70.9	69
540	6.734	0.299	0.34	0.685	88.9	90
600	7.361	0.087	0.31	0.199	78.2	77
660	7.977	0.235	0.29	0.544	86.9	87
720	8.583	0.081	0.27	0.188	77.7	74
780	9.179	0.218	0.25	0.500	86.2	86
840	9.767	0.019	0.23	0.043	64.9	62
900	10.346	0.131	0.22	0.298	81.7	80
960	10.919	0.012	0.20	0.026	60.5	58
1020	11.484	0.077	0.19	0.168	76.7	77

Copyright The Institute of Electrical and Electronics Engineers, Inc.
Provided by IHS under license with IEEE
No reproduction or networking permitted without license from IHS
Not for Resale

Annex B
Decibel, power, and C-message noise

The human ear can handle a very wide range of audio levels. Voice telecommunication circuits should deal with a corresponding wide range of signal or noise levels. Traditionally, wide-range audio signal levels were interpreted as bells or decibels. Voice telecommunication circuits have used a similar approach. A decibel is a unit division defined by applying equation B1.

$$dB=10 \log(P_1 / P_2) \quad \text{(B1)}$$

Equation B1 represents a measure of the gain or loss of the circuit when P_2 represents the signal or noise power entering one port of a two-port circuit and P_1, the resulting output power from the other port. Note that the numerical result of equation B1 is dimensionless when P_1 and P_2 are expressed in the same units. It is customary to place the suffix "dB" after these gain or loss values as an indication of their method of derivation. If in equation B1, P_1 is the measured input port or output port power level in watts, and P_2 is some desired reference power level as a fraction of a watt, then the result expresses a decibel value above or below the reference power level. There are a number of common suffixes applied to the numeric results that imply the reference level used in the evaluation: dBm for 10^{-3} W and dBrn for 10^{-12} W. To avoid confusion with decibels used with gain or loss, dBw should be used where the reference is 1 W.

Communication circuit-power measuring devices have meters scaled to read in dB above a defined reference level. On some instruments, the reference can be changed in 10 dB steps. All these instruments actually measure rms voltage. Internally, the instrument is scaled to give a power reading by using

$P_1 = \frac{V^2}{R}$ in equation B1.

For metallic or bridged-pair measurements, the value of terminating resistance *(R)* used for scaling is 600 Ω. This figure is derived from the nominal characteristic impedance at voice frequencies of the pair. As the pair terminations roughly match the pair characteristic impedance, the use of this value of *R* implies that the power reading is a measure of the power load at the point of measurement. For accurate metering, the internal impedance of the measuring set must be much greater than 600 Ω.

Many instruments provide an internal 600 Ω termination for the case where the pair termination is not present or is suspected of being nonstandard. In general, measurement accuracy is better when these known terminations are used.

It is sometimes necessary to interpret an rms voltage (V) that is equivalent to a metallic noise measurement (Nm). In general, equation B2 can be used.

$$V=\sqrt{600} \times 10^{\frac{Nm + Ref}{20}} \quad \text{(B2)}$$

where

V is volts
Nm is the dBm when the reference level *(Ref)* is 1mW (–30 dBw)
Nm is the dBrn when the reference level *(Ref)* is 1pW (–120 dBw)

The value of *R* (600 Ω) in equation B2 is a built-in scale factor between the voltage at the instruments terminals and the displayed scale. The manufacturer should be consulted before using any value other than 600 Ω in equation B2.

Copyright The Institute of Electrical and Electronics Engineers, Inc.
Provided by IHS under license with IEEE
No reproduction or networking permitted without license from IHS Not for Resale

Many instruments are also designed to measure common mode (noise-to-ground) of pair circuits. Historically, this measuring mode was a simple adaptation of the metallic measuring mode. The instrument retained the 600 Ω scaling factor but the input voltage was reduced by a factor of 100 by means of a divider. The divider introduced a 40 dB reference change. This change was added to the reading in early instruments. In later designs, mode switches altered the offset of the reference switch. The voltage divider effectively increased the instrument load impedance to approximately 100 kΩ.

The interpretation of noise-to-ground readings as power levels is meaningless. Common-mode circuits in telecommunication lines are not terminated in the line's characteristic impedance. At the switching center, the terminating impedance is approximately 160 Ω . At the customer end, it can be many megohms (m·Ω). The actual power transfer for a distributed inductive source should approach zero at the customer end. In typical situations, noise-to-ground measurements are highest at the customer end. This apparent inconsistency occurs because the power measurement is actually an interpreted voltage measurement. Noise-to-ground should be thought of as a voltage interpretation on a logarithmic scale even though the reference implies a power measurement. As with any voltage measurement on a circuit having a finite source impedance, the impedance of the measuring device must be sufficiently high so as not to reduce the voltage significantly. A figure of 100 kΩ is adequate.

The noise-to-ground readings (Ng) can be correctly interpreted as a voltage by substituting Ng for Nm in equation B2.

Some instruments, such as frequency selective voltmeters, interpret their output as dB relative to a reference voltage. They are based on equation B3.

$$dB = 20 \log\left(\frac{V_1}{V_2}\right) \tag{B3}$$

When V_1 is the measured value in volts and V_2 is a reference value of 1 V, then the value of equation B3 has the suffix dBv.

Voice telecommunications requires the transmission of energy over a band of frequencies. The standard telephone receiver does not uniformly translate electric power to audio power at all frequencies. Also, the human ear's impression of equal loudness is a function of frequency. Tests have been made at various frequencies of the relative power levels that are required in a standard telephone receiver to produce equal subjective loudness. When the reference power level is taken at 1000 Hz, the results are called "C-message weighting."

Table 3 gives the C-message weighting values for power utility harmonics. Also shown are the equivalent voltage ratios for use with frequency selective voltmeters.

Many telecommunication test instruments have an optional C-message filter. This filter weights the incoming signal or noise in the same manner as the telephone receiver plus subjective sensitivity. The resulting measured power level expressed by equation B1 is given the suffix "dBrnC" when the reference is 1 pW. Audio noise objectives are usually expressed in terms of dBrnC.

Broad-band test instruments are engineered for rms or power summation of the frequencies entering them. When frequency selective voltmeters are used to give a set of readings (Vm) at different frequencies then equation B4 may be used to calculate the equivalent power sum.

$$10 \log\left[\sum^{f} \frac{10^{V_m \frac{(f)}{10}}}{600} + 120\right]$$

When Vm(f)'s are in dBv or dBvC, then the results are in dBrn or dBrnC, respectively.

Note that the 600 Ω figure in equation B4 is not a scaling factor of the instrument. It represents a nominal load impedance of the circuit.

Copyright The Institute of Electrical and Electronics Engineers, Inc.
Provided by IHS under license with IEEE
No reproduction or networking permitted without license from IHS
Not for Resale