IEEE Std 665-1995
(Revision of IEEE Std 665-1987)

IEEE Guide for Generating Station Grounding

Sponsor

Energy Development and Power Generation Committee
of the
IEEE Power Engineering Society

Approved September 21, 1995

IEEE Standards Board

Abstract: Grounding practices that have generally been accepted by the electric utility industry as contributing to effective grounding systems for personnel safety and equipment protection in generating stations are identified. A guide for the design of generating station grounding systems and for grounding practices applied to generating station indoor and outdoor structures and equipment, including the interconnection of the station and substation grounding systems, is provided.
Keywords: electric utilities, generating stations, grounding, grounding systems, personnel safety, substation grounding systems

The Institute of Electrical and Electronics Engineers, Inc.
345 East 47th Street, New York, NY 10017-2394, USA

Copyright © 1996 by the Institute of Electrical and Electronics Engineers, Inc.
All rights reserved. Published 1996. Printed in the United States of America.

ISBN 1-55937-567-1

No part of this publication may be reproduced in any form, in an electronic retrieval system or otherwise, without the prior written permission of the publisher.

Copyright The Institute of Electrical and Electronics Engineers, Inc.
Provided by IHS under license with IEEE
No reproduction or networking permitted without license from IHS
Not for Resale

IEEE Standards documents are developed within the Technical Committees of the IEEE Societies and the Standards Coordinating Committees of the IEEE Standards Board. Members of the committees serve voluntarily and without compensation. They are not necessarily members of the Institute. The standards developed within IEEE represent a consensus of the broad expertise on the subject within the Institute as well as those activities outside of IEEE that have expressed an interest in participating in the development of the standard.

Use of an IEEE Standard is wholly voluntary. The existence of an IEEE Standard does not imply that there are no other ways to produce, test, measure, purchase, market, or provide other goods and services related to the scope of the IEEE Standard. Furthermore, the viewpoint expressed at the time a standard is approved and issued is subject to change brought about through developments in the state of the art and comments received from users of the standard. Every IEEE Standard is subjected to review at least every five years for revision or reaffirmation. When a document is more than five years old and has not been reaffirmed, it is reasonable to conclude that its contents, although still of some value, do not wholly reflect the present state of the art. Users are cautioned to check to determine that they have the latest edition of any IEEE Standard.

Comments for revision of IEEE Standards are welcome from any interested party, regardless of membership affiliation with IEEE. Suggestions for changes in documents should be in the form of a proposed change of text, together with appropriate supporting comments.

Interpretations: Occasionally questions may arise regarding the meaning of portions of standards as they relate to specific applications. When the need for interpretations is brought to the attention of IEEE, the Institute will initiate action to prepare appropriate responses. Since IEEE Standards represent a consensus of all concerned interests, it is important to ensure that any interpretation has also received the concurrence of a balance of interests. For this reason IEEE and the members of its technical committees are not able to provide an instant response to interpretation requests except in those cases where the matter has previously received formal consideration.

Comments on standards and requests for interpretations should be addressed to:

Secretary, IEEE Standards Board
445 Hoes Lane
P.O. Box 1331
Piscataway, NJ 08855-1331
USA

Note: Attention is called to the possibility that implementation of this standard may require use of subject matter covered by patent rights. By publication of this standard, no position is taken with respect to the existence or validity of any patent rights in connection therewith. The IEEE shall not be responsible for identifying all patents for which a license may be required by an IEEE standard or for conducting inquiries into the legal validity or scope of those patents that are brought to its attention.

Authorization to photocopy portions of any individual standard for internal or personal use is granted by the Institute of Electrical and Electronics Engineers, Inc., provided that the appropriate fee is paid to Copyright Clearance Center. To arrange for payment of licensing fee, please contact Copyright Clearance Center, Customer Service, 222 Rosewood Drive, Danvers, MA 01923 USA; (508) 750-8400. Permission to photocopy portions of any individual standard for educational classroom use can also be obtained through the Copyright Clearance Center.

--`,,`--`,,`,,`,`,,`---

Copyright The Institute of Electrical and Electronics Engineers, Inc.
Provided by IHS under license with IEEE
No reproduction or networking permitted without license from IHS

Not for Resale

Introduction

(This introduction is not part of IEEE Std 665-1995, IEEE Guide for Generating Station Grounding.)

This guide is intended to complement the recommendations and information presented in existing grounding practices for industrial and commercial power systems (IEEE Std 142-1991, IEEE Recommended Practice for Grounding of Industrial and Commercial Power Systems), substations (IEEE Std 80-1986, IEEE Guide for Safety in AC Substation Grounding), and measurements (IEEE Std 81.2-1991, IEEE Guide for Measurment of Impedance and Safety Characteristics of Large, Extended or Interconnected Grounding Systems), while drawing particular attention to specific requirements for generating stations.

This guide was prepared by a Task Force of the Grounding Practices Working Group. The working group is part of the Station Design Subcommittee and was sponsored by the Energy Development and Power Generation Committee of the IEEE Power Engineering Society. Comments were also solicited from the following groups:

— National Electric Safety Code® Committee
— Power System Communications Committee
— Power System Instrumentation and Measurements Committee
— Power System Relaying Committee
— Transmission and Distribution Committee
— Surge Protective Devices Committee
— Substation Committee
— Industry Applications Society
— Edison Electric Institute

At the time that the document was approved the members of the Task Force were

Malcolm V. Thaden, *Chair*
B. W. Crowly, *Secretary*

A. Benge
L. E. Durham
J. Gardell
L. A. D. Grant
J. R. Jancauskas
J. Kruus
R. Kyle
S. A. Nikolakakos
Derek M. Sawyer
G. L. Vaughn

The following persons were on the balloting committee:

Steven R. Brockschink
Gary Engmann
W. W. Fields
James H. Gurney
Thomas J. Hammons
Robert D. Handel
T. A. Higgins
James H. Jones
David L. Kornegay
P. R. H. Landrieu
Gregory L. Luri
O. P. Malik
Omar S. Mazzoni
Donald R. McCabe
Gary D. Osburn
Charles R. Pope
Bradford M. Radimer
Greg Rahman
Derek M. Sawyer
Ken H. Sebra
James E. Stoner, Jr.
Malcolm V. Thaden
Edward T. Voelker

Copyright The Institute of Electrical and Electronics Engineers, Inc.
Provided by IHS under license with IEEE
No reproduction or networking permitted without license from IHS
Not for Resale

When the IEEE Standards Board approved this standard on September 21, 1995, it had the following membership:

E. G. "Al" Kiener, *Chair* **Donald C. Loughry,** *Vice Chair*
Andrew G. Salem, *Secretary*

Gilles A. Baril
Clyde R. Camp
Joseph A. Cannatelli
Stephen L. Diamond
Harold E. Epstein
Donald C. Fleckenstein
Jay Forster*
Donald N. Heirman
Richard J. Holleman
Jim Isaak
Ben C. Johnson
Sonny Kasturi
Lorraine C. Kevra
Ivor N. Knight
Joseph L. Koepfinger*
D. N. "Jim" Logothetis
L. Bruce McClung
Marco W. Migliaro
Mary Lou Padgett
John W. Pope
Arthur K. Reilly
Gary S. Robinson
Ingo Rusch
Chee Kiow Tan
Leonard L. Tripp
Howard L. Wolfman

*Member Emeritus

Also included are the following nonvoting IEEE Standards Board liaisons:

Satish K. Aggarwal
Richard B. Engelman
Robert E. Hebner
Chester C. Taylor

Mary Lynne Nielsen
IEEE Standards Project Editor

National Electrical Safety Code is a registered trademark and service mark of the Institute of Electrical and Electronics Engineers, Inc.

Copyright The Institute of Electrical and Electronics Engineers, Inc.
Provided by IHS under license with IEEE
No reproduction or networking permitted without license from IHS
Not for Resale

Contents

CLAUSE PAGE

1. Overview ... 1

2. References ... 1

3. Definitions ... 3

4. Design objectives ... 4

4.1 Neutral ground, equipment ground, and safety ground ... 4
4.2 Station grounding system ... 4
4.3 Preventing the transfer of high ground voltages ... 5
4.4 Design objectives ... 5

5. Detailed design considerations ... 6

5.1 Grounding principles ... 6
5.2 Ground grid design ... 6
5.3 Generator and isolated phase bus grounding ... 19
5.4 Grounding of buildings, fences, and structures ... 23
5.5 Grounding of generating station auxiliaries ... 25
5.6 Lightning protection for generating station structures ... 33
5.7 Grounding of buried structures ... 38
5.8 Sizing of grounding conductors ... 42

6. Bibliography ... 45

ANNEXES

Annex A Determination of the *k* factor ... 47

Annex B Corrosion ... 49

B.1 Corrosion ... 49

Annex C Division of current for small interior grids ... 50

C.1 Purpose ... 50

C.2 Calculation ... 50

C.3 Summary of results ... 53

Copyright The Institute of Electrical and Electronics Engineers, Inc.
Provided by IHS under license with IEEE
No reproduction or networking permitted without license from IHS Not for Resale

IEEE Guide for Generating Station Grounding

1. Overview

This guide was developed to identify grounding practices that have generally been accepted by the electric utility industry as contributing to effective grounding systems for personnel safety and equipment protection in generating stations.

It provides a guide for the design of generating station grounding systems and for grounding practices applied to generating station indoor and outdoor structures and equipment, including the interconnection of the station and substation grounding systems. Guidance for the grounding of control and instrumentation equipment in generating stations can be found in IEEE Std 1050-1989.[1]

Generating station grounding designs are complicated by considerations such as physically large outdoor areas with multiple buildings and associated transfer voltages, grounding effects of buried infrastructure, rotating electrical apparatus, large indoor areas, auxiliary systems with multiple voltage levels, and the need for increasingly "clean" signal ground sources for control systems. This guide has been developed in recognition that the complexities of generating stations are such that the generally accepted techniques and programs for the design of electrical substation grounding systems for safety may not address all of the issues. While these complexities may be suitably analyzed with the computerized methods that are available, this guide presents a manual calculation method based on the principles presented in IEEE Std 80-1986.

It is not intended that this document provide grounding test methods or quantitative analysis of the effects of lightning surges. This document should not be interpreted as requiring any specific design for a particular installation; instead, it is a guide to the process and special techniques that the designer should recognize and consider. The necessary supporting detail is to be found in other relevant standards and documents; these are referenced in the text where appropriate.

2. References

This guide should be used in conjunction with the following publications. When the following publications are superseded by an approved revision, the revision shall apply.

ANSI C2-1993, National Electrical Safety Code®.[2]

---

[1]Information on references can be found in clause 2.

[2]The NESC® is available from the Institute of Electrical and Electronics Engineers, 445 Hoes Lane, P.O. Box 1331, Piscataway, NJ 08855-1331, USA.

Copyright The Institute of Electrical and Electronics Engineers, Inc.
Provided by IHS under license with IEEE
No reproduction or networking permitted without license from IHS
Not for Resale

IEEE Std C37.101-1993, IEEE Guide for Generator Ground Protection (ANSI).[3]

IEEE Std C62.92-1987 (Reaff 1993), IEEE Guide for the Application of Neutral Grounding in Electrical Utility Systems, Part I—Introduction (ANSI).

IEEE Std C62.92.2-1989, IEEE Guide for the Application of Neutral Grounding in Electrical Utility Systems, Part II—Grounding of Synchronous Generator Systems (ANSI).

IEEE Std C62.92.3-1993, IEEE Guide for the Application of Neutral Grounding in Electrical Utility Systems, Part III—Generator Auxiliary Systems.

IEEE Std C62.92.4-1991, IEEE Guide for the Application of Neutral Grounding in Electrical Utility Systems, Part IV—Distribution (ANSI).

IEEE Std C62.92.5-1992, IEEE Guide for the Application of Neutral Grounding in Electrical Utility Systems, Part V—Transmission Systems and Subtransmission Systems (ANSI).

IEEE Std 80-1986 (Reaff 1991), IEEE Guide for Safety in AC Substation Grounding (ANSI).

IEEE Std 81-1983, IEEE Guide for Measuring Earth Resistivity, Ground Impedance, and Earth Surface Potentials of a Ground System (Part 1).

IEEE Std 81.2-1991, IEEE Guide for Measurement of Impedance and Safety Characteristics of Large, Extended or Interconnected Grounding Systems (ANSI).

IEEE Std 100-1992, The New IEEE Standard Dictionary of Electrical and Electronics Terms (ANSI).

IEEE Std 142-1991, IEEE Recommended Practice for Grounding of Industrial and Commercial Power Systems (IEEE Green Book) (ANSI).

IEEE Std 487-1992, IEEE Recommended Practice for the Protection of Wire-Line Communication Facilities Serving Electric Power Stations (ANSI).

IEEE Std 666-1991, IEEE Design Guide for Electric Power Service Systems for Generating Stations (ANSI).

IEEE Std 1050-1989, IEEE Guide for Instrumentation and Control Equipment Grounding in Generating Stations (ANSI).

IEEE Std 1100-1992, IEEE Recommended Practice for Powering and Grounding Sensitive Electronic Equipment (IEEE Emerald Book) (ANSI).

NFPA 50A-1994, Gaseous Hydrogen Systems at Consumer Sites.[4]

NFPA 77-1993, Static Electricity.

NFPA 780-1992, Lightning Protection Code.

---

[3]IEEE publications are available from the Institute of Electrical and Electronics Engineers, 445 Hoes Lane, P.O. Box 1331, Piscataway, NJ 08855-1331, USA.

[4]NFPA publications are available from Publications Sales, National Fire Protection Association, 1 Batterymarch Park, P.O. Box 9101, Quincy, MA 02269-9101, USA.

Copyright The Institute of Electrical and Electronics Engineers, Inc.
Provided by IHS under license with IEEE
No reproduction or networking permitted without license from IHS Not for Resale

3. Definitions

There is other terminology for grounding conductors used in the industry. Terminology provided for the purposes of this guide is demonstrated in the accompanying figures and in the following definitions:

3.1 bonding: The permanent joining of metallic parts to form an electrically conductive path that will ensure electrical continuity and the capacity to conduct safely any current likely to be imposed.

3.2 bonding jumper: A reliable conductor to ensure the required electrical conductivity between metal parts that need to be electrically connected.

3.3 equipment grounding conductor: The conductor used to connect the noncurrent-carrying metal parts of equipment, raceways, and other enclosures to the service equipment, the service power source(s) ground, or both.

3.4 four-wire system: A three-phase system consisting of three phase conductors and a neutral conductor.

3.5 generating station: A plant wherein electric energy is produced by conversion from some other form of energy (for example, chemical, nuclear, solar, mechanical, or hydraulic) by means of suitable apparatus. This includes all generating station auxiliaries and other associated equipment required for the operation of the plant. Not included are stations producing power exclusively for use with communications systems.

3.6 grid mesh: Any one of the open spaces enclosed by the grounding grid conductors.

3.7 ground grid: A system of horizontal ground electrodes that consists of a number of interconnected bare conductors buried in the earth, providing a common ground for electrical devices or metallic structures, usually in one specific location.

NOTE—Grids buried horizontally near the surface of the earth are also effective in controlling the surface potential gradients. A typical grid usually is supplemented by a number of ground rods and may be further connected to auxiliary ground electrodes to lower its resistance with respect to remote earth.

3.8 ground well: A hole with a diameter greater than an inserted ground rod, drilled to a specified depth, and backfilled with a highly conductive material. The backfill will be in intimate contact with the earth.

3.9 grounding conductor: A conductor used to connect equipment or the grounded circuit of a wiring system to a grounding electrode or electrodes (i.e., ground grid).

3.10 high-voltage system: An electric system having a maximum root-mean-square ac voltage above 72.5 kV.

3.11 isolated-phase bus: A metal-enclosed bus in which each phase conductor is enclosed by an individual metal housing separated from adjacent conductor housings by an air space.

3.12 metal-enclosed bus: An assembly of conductors with associated connections, joints, and insulating supports within a grounded metal enclosure.

3.13 neutral ground: An intentional ground applied to the neutral conductor or neutral point of a circuit, transformer, machine, apparatus, or system.

3.14 nonsegregated-phase bus: A metal-enclosed bus in which all phase conductors are in a common metal enclosure without barriers between the phases.

Copyright The Institute of Electrical and Electronics Engineers, Inc.
Provided by IHS under license with IEEE
No reproduction or networking permitted without license from IHS
Not for Resale

3.15 overhead ground wire: A grounded, bare conductor suspended horizontally between supporting rods or masts to provide protection from lightning strikes for structures, equipment, or suspended conductors within the zone of protection created by the combination of the masts and the overhead ground wire.

3.16 safety ground: The connection between a grounding system and metallic parts that are not usually energized but that may become live due to a fault or an accident; often referred to as equipment or frame ground.

3.17 substation: An enclosed assemblage of equipment (e.g., switches, circuit breakers, buses, and transformers) under the control of qualified persons, through which electric energy is passed for the purposes of switching or modifying its characteristics.

3.18 system ground: The connection between a grounding system and a point of an electric circuit (for example, a neutral point).

3.19 transferred voltage: That voltage between points of contact, hand to foot or feet, where the grounded surface touched is intentionally grounded at a remote point (or unintentionally touching at a remote point a conductor connected to the station ground system). Here the voltage rise encountered due to ground fault conditions may equal or exceed the ground potential rise of the ground grid discharging the fault current (and not a fraction of this total as is encountered in the usual touch contact).

3.20 zone of protection: The adjacent space provided by a grounded air terminal, mast, or overhead ground wire that is protected against most direct lightning strikes.

4. Design objectives

4.1 Neutral ground, equipment ground, and safety ground

Figure 1 and the following list are intended to clarify the differences between neutral ground, equipment ground, and safety ground.

a) The neutral ground (e.g., solid grounding, resistance grounding, etc.) is intended to establish the ground reference of the electrical system. The neutral ground connection is usually made to the neutral point of the supply equipment (the generator or the transformer). Recommendations for neutral grounding are included in IEEE Std C62.92-1987, IEEE Std C62.92.2-1989, IEEE Std C62.92.3-1993, IEEE Std C62.92.4-1991, IEEE Std C62.92.5-1992, IEEE Std 142-1991, and IEEE Std 666-1991.

b) The safety ground connections are made for protecting personnel from injury and property from damage. These connections are made to parts of the system that are not usually energized but may become live due to an abnormal condition.

c) The equipment ground ensures a low impedance return path for ground current should an electrical fault occur between the live conductors and the equipment enclosure. If such a return path is ensured, the circuit protection will be able to trip the faulted circuit in a short time.

4.2 Station grounding system

Due to the size of a generating station and to the variety of equipment and structures included, grounding design should provide for equipment and safety grounding and should consider all of the areas in the following list:

Copyright The Institute of Electrical and Electronics Engineers, Inc.
Provided by IHS under license with IEEE
No reproduction or networking permitted without license from IHS Not for Resale

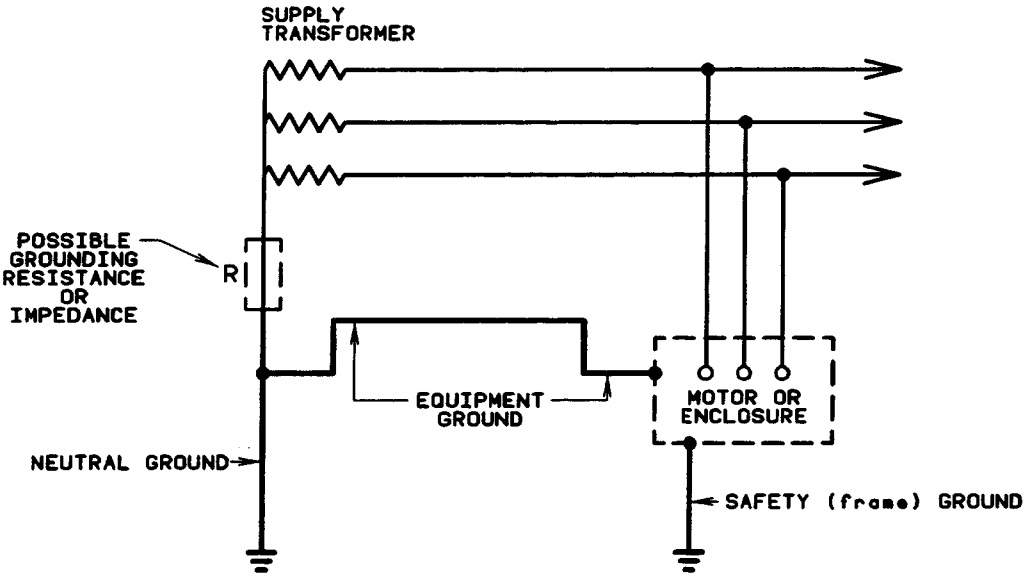

Figure 1—Definitions of neutral, safety, and equipment grounds

a) *Ground grid*. This safely conducts to ground the largest ground fault current that may occur and limits the touch and step voltages in the outdoor areas of concern.
b) *Generator isolated-phase bus grounding*. This limits the touch voltage on the enclosures in the event of a fault in the bus enclosure. The arrangement and sizing of the grounding conductors should consider circulating currents.
c) *Grounding of structures*. This prevents dangerous touch voltages from faults or from static induction.
d) *Grounding of station auxiliaries*. This is intended to prevent dangerous touch voltages due to local faults or equipment failures in the station auxiliaries.
e) *Lightning protection of structures*. This is intended to protect the station from the direct and indirect effects of lightning strikes.
f) *Grounding of buried structures*. This is mainly intended to avoid the transfer of high ground voltages.
g) *Grounding of instrumentation and control systems*. This is intended to keep touch voltages within safe limits and ensure proper operation of equipment. Station controls are usually grounded at a single point, and control cables may extend throughout the station, resulting in significant voltages between the “control ground” and the “local ground.”

4.3 Preventing the transfer of high ground voltages

Besides buried structures, ground voltages may be transferred into or out of the station by many other means, including piping, cable ground or neutral wires, control cable shields, telephone lines, rail conveyors, and other metallic structures. Guidance may be found in clause 15 of IEEE Std 80-1986.

4.4 Design objectives

The grounding practices included in this guide are intended to protect personnel in the generating station against dangerous touch and step voltages and also to protect property from damage. For personnel this pro-

Copyright The Institute of Electrical and Electronics Engineers, Inc.
Provided by IHS under license with IEEE
No reproduction or networking permitted without license from IHS
Not for Resale

tection is ensured, in the case of a fault, by either rapid automatic disconnection of the power supply or by limitation of the resulting touch and step voltages to acceptable levels.

This is achieved by the following design objectives:

a) Provide a low-impedance ground fault current return path in order to activate the protection and clear or alarm the ground fault as soon as possible (equipment ground).
b) Limit the voltages on station structures and accessible equipment both during normal operation and during electrical transients to safe levels (safety ground).
c) Minimize electrical noise interference in control and instrumentation systems (safety and equipment grounds).
d) Minimize the effect of lightning strikes on personnel, equipment and structures (safety and equipment grounds).

5. Detailed design considerations

5.1 Grounding principles

The safety and equipment grounding systems of generating stations should meet the following principles or requirements:

a) All metallic enclosures on equipment and exposed noncurrent-carrying conductive materials capable of becoming energized due to either insulation failure, inadvertent contact with an energized conductor, or building up of a static or induced voltage should be grounded.
b) The grounding arrangement should ensure a deliberate ground fault current return path, so that the (overcurrent or ground fault) protection will sense the fault and either trip the faulty circuit or provide an alarm to the station operator.
c) The grounding should limit the step and touch voltage to acceptable limits during a ground fault on the enclosed equipment.
d) The grounding conductors and connections should withstand the ground fault current for the duration of the fault, without being damaged by thermal, thermomechanical or electromechanical stresses.
e) The grounding conductors should be continuous; no switching device should be inserted in the grounding conductors (except where the operation of the switching device will also automatically disconnect all power sources to the equipment grounded by that conductor). Structural changes after installation should not interrupt the grounding conductor. In general, equipment enclosures should not be used as part of the grounding conductor.
f) The grounding conductors should be mechanically reliable or protected in order to withstand any possible mechanical stress imposed on them. The exposed connections of grounding conductors should be accessible for inspection.
g) The grounding system should be designed to minimize corrosion to adjacent structures, equipment and enclosures (see 5.7).

5.2 Ground grid design

5.2.1 General

The predominant industry guide for the design of ground grid systems is IEEE Std 80-1986. The differences between generating stations and substations are significant enough that IEEE Std 80-1986 cannot usually be directly applied to the design of generating station ground grids. While other design approaches are acceptable, the design procedure presented in this guide is based on the widely recognized concepts of IEEE Std

Copyright The Institute of Electrical and Electronics Engineers, Inc.
Provided by IHS under license with IEEE
No reproduction or networking permitted without license from IHS Not for Resale

80-1986. This manual calculation procedure recognizes that successful grounding systems have been developed without sophisticated calculation techniques. There may, however, be cases where a more detailed analysis should be performed with computer-aided engineering tools.

5.2.2 Differences between substations and generating stations

Two major differences between substations and generating stations are that generating stations usually occupy a much larger physical area and have numerous large buried structures and foundations. Although both of these characteristics have a significant impact in lowering the overall resistance of the station, the effect of such supplemental grounding structures is not taken into account by the simplified design equations in IEEE Std 80-1986. In addition, many generating stations are located close to a source of cooling water, which may be useful as a low-resistance reference point.

From the aspect of ground grid design, generating stations differ from substations in that the personnel to be protected are generally working indoors. Because they are not in direct contact with the earth or with a layer of crushed rock covering the earth, they are not exposed to many of the step and touch voltage conditions that personnel in substations are. This is a valid assumption if the floor surfaces either assure an effective insulation from earth potentials or else are effectively equivalent to a plate or closely spaced mesh grid that is always at the station ground potential. This includes the building structure and its fixtures. In this respect, generating stations are similar to fully enclosed indoor substations.

Different design philosophies exist regarding the treatment of concrete floor surfaces within buildings. While some feel it is necessary to provide a separate ground grid within the concrete, others take credit for the closely spaced mesh of the rebar and the fact that rebar will have numerous connections to the grounded building structural steel. If credit is taken for the rebar, the only grounding conductors placed within the slab are those required for equipment connection points. This guide will assume that a separate grid within concrete slabs that is sized according to step and touch voltage criteria is not required.

This clause, therefore, presents a procedure for evaluating the safety of those portions of the station grid outside of the main station building(s) where personnel are expected to be working, such as the step-up transformer area, the water intake pumping areas, and fuel and hydrogen handling areas. The following subclauses are presented in the order in which a design would generally proceed.

5.2.3 Soil resistivity

One of the most important parameters in designing the station grounding system is the resistivity of the soil in the station area. To obtain these values, an extensive soil resistivity survey should be conducted in the station area. The most common test methods are the Wenner Four-Probe method, which is used to measure large volumes of soil, and the Soil Box Method, which is used to measure soil samples.

Very early in the generating station design phase, extensive soils exploration is required before detailed civil and structural design can begin. Soil boring logs or a formal soils report is usually available, or a cognizant civil engineer has knowledge of subsurface conditions. If test pits are dug, there will be an opportunity to measure subsurface soils directly.

If the extreme values of all soil resistivity data points fall within 30% of each other, a uniform soil assumption can be made. Because the simplified design equations of IEEE Std 80-1986 require a uniform soil assumption in order to proceed with a preliminary design, a single value for soil resistivity will have to be chosen. Even though a uniform soil assumption may not be possible for the entire station site, it may be appropriate for the portions of the site that will be analyzed by calculation. If a uniform soil resistivity assumption cannot be made, then the final design should be based on an analysis technique that can incorporate a two-layer or more sophisticated soil model.

Copyright The Institute of Electrical and Electronics Engineers, Inc.
Provided by IHS under license with IEEE
No reproduction or networking permitted without license from IHS
Not for Resale

In determining a resistivity value to be used, attention should be paid to the conditions that existed at the time the measurements were taken. Soil moisture content, temperature, and salt content have a significant effect on resistivity measurements.

Caution should be used when determining a design resistivity value because large volumes of soil are frequently excavated and replaced by fill. The depth of the excavation may invalidate a single or two-layer soil model that is based on resistivity measurements from the ungraded site. This would require re-evaluation and/or the use of additional computational techniques.

5.2.4 Ground grid outer dimensions

The area of the ground grid is the variable that has the greatest effect on lowering the overall grid resistance. Measures such as adding an additional grid conductor do not reduce the grid resistance to the extent that increasing the area does.

Depending on the arrangement of the station, the boundary of the station grounding area may be defined by perimeter fencing or a cluster of buildings. If a building cluster is chosen as the desired design area, then a perimeter grounding conductor should be established that encloses these buildings.

Although it is unlikely that the chosen grid area will be rectangular, the simplified design equations require a square or rectangular site. On a layout drawing of the station site, determine the largest rectangle that will fit within the chosen grid area. This represents the four outer grid conductors and will conservatively define the area of the grid to be used in the calculations.

5.2.4.1 Generating station to substation interconnection

Generally, one or more high-voltage substations are located on the generating station site. When the substation is located in close proximity to the generating station (250 m), the substation ground grid should be tied into the generating station grid by multiple conductors. These connections should include conductors installed directly under the tie lines to the station step-up transformers. This should benefit both the generating station and substation grounding system by increasing the available area.

When the substation and generating station are separated by a distance that makes it impractical to tie the two grids together, any interconnections between the two ground grids (control wiring, multiplexing leads, telephone lines, etc.) can be subjected to the difference in voltage between the two ground grids. Under fault conditions, voltage differences of 5 kV are common. Even if the remote substation ground grid is tied to the generating station ground grid by either buried or shield wires, there may be significant voltage differences between the two grids.

5.2.5 Available ground fault current

During a system fault, the fault current may use the earth as a return path to the system neutral. The current that is injected into the earth during a fault results in a ground potential rise (GPR). Typically, only a fraction of the total fault current flows from the grounding system into the earth. Faults occurring within a generating station may not produce the worst earth currents, since there are direct conductive paths that the fault current can follow to reach the system neutral (assuming the station has a circuit reference ground, such as a grounded-wye generator step-up transformer). The faults that produce the largest ground currents may be line-to-ground faults occurring some distance away from the generating station.

5.2.5.1 Zero-sequence rms fault current

Since three-phase faults are balanced in nature, they generally produce only small amounts of earth current and are therefore usually not considered in the ground grid design. The maximum single line-to-ground fault is the value typically used in the ground grid design. Line-to-line-to-ground values are also commonly

Copyright The Institute of Electrical and Electronics Engineers, Inc.
Provided by IHS under license with IEEE
No reproduction or networking permitted without license from IHS Not for Resale

investigated. Values should be considered for all voltage levels in the generating station and its adjoining substation. The largest of these fault current (I_f) values, which results in the highest grid-to-earth current, will be the design I_f value.

Some designs have used the short-circuit rating of the equipment. This value can often be ten times higher than the ultimate single-line-to-ground fault current. Use of such a large safety factor in the initial design may make it difficult to design the grid to meet the tolerable touch and step voltage criteria by any means. Rather than using the short-circuit rating of the equipment to increase the safety factor of the design, it may be more appropriate to build in any desired additional safety factors when determining the corrective projection factor in 5.2.5.5.

5.2.5.2 Determine the split factor (S_f)

The split factor is used to take into account the fact that not all of the fault current uses the earth as a return path. The most accurate method for determining the percentage of the total fault current that flows into the earth is to use one of the computerized solution methods that is available. These programs do, however, require an involved data collection effort. For the purposes of this guide, the graphical method of reference will be used (see [B11]). This method requires that the total three-phase zero-sequence fault current ($3I_0$) at the generating station be calculated using a conventional short-circuit program, such as those routinely used by system relay engineers. Since generating stations usually contain sources of zero-sequence fault current, the ratio of local versus remote contribution should be calculated for a fault at each transmission system voltage level. Depending on the ratio of remote to local zero-sequence fault current contribution, the appropriate figure from the reference is selected in order to determine the split factor. Once the appropriate graph has been chosen, the intersection of the preliminary grid resistance (see 5.2.5.3) and the appropriate curve yields the value for the split factor on the y-axis. Note that this value is given in percent and should be converted to decimal notation.

The greater the local contribution, the lower the earth current, since the locally contributed fault current usually has a direct conductive path to the system neutral.

In calculating the number of transmission lines and feeders, only those that have either overhead shield wires or solidly grounded neutrals should be counted. If the number of lines falls between the given curve values, use the curve with the lower number of lines to be conservative.

5.2.5.3 Preliminary grid resistance

In order to use the graphs from [B11], a value for the grid resistance (R_g) should be calculated. Since the design has not yet been started, an approximate value can be calculated by using the following equation:

$$R_g = \frac{\rho}{4}\sqrt{\frac{\pi}{A}} \tag{1}$$

where

ρ is the soil resistivity (in Ω·m) as determined in 5.2.3

A is the area (in m^2) as determined in 5.2.4

Since the soil resistivity and the ground grid area are the two most important variables controlling the grid resistance, equation (1) yields a sufficiently accurate answer to be used for the x-coordinate on the graphs.

Equation (1) does not take into account items such as foundations, ground wells, or large hydro plant structures that may contribute significantly to lowering the overall resistance to ground. To take advantage of the

Copyright The Institute of Electrical and Electronics Engineers, Inc.
Provided by IHS under license with IEEE
No reproduction or networking permitted without license from IHS
Not for Resale

effect of these items (in a simplified manner), the following modified formula from IEEE Std 80-1986 for calculating a ground system resistance that includes both a ground grid and rods may be used:

$$R_g = \frac{R_1 R_2 - R_{12}^2}{R_1 + R_2 - 2R_{12}} \tag{2}$$

where

R_1 is the resistance of ground conductors
R_2 is the resistance of all ground rods (rodbed)
R_{12} is the mutual resistance between the group of grid conductors and the group of ground rods

R_1 is

$$\left(\frac{\rho_1}{\pi l_1}\right)\left[\ln\left(\frac{2l_1}{h'}\right) + K_1\left(\frac{l_1}{\sqrt{A}}\right) - K_2\right] \tag{3}$$

R_2 is

$$\left(\frac{\rho_a}{2n\pi l_2}\right)\left[\ln\left(\frac{8l_2}{d_2}\right) - 1 + 2K_1\left(\frac{l_2}{\sqrt{A}}\right)(\sqrt{n} - 1)^2\right] \tag{4}$$

R_{12} is

$$\left(\frac{\rho_a}{\pi l_1}\right)\left[\ln\left(\frac{2l_1}{l_2}\right) + K_1\left(\frac{l_1}{\sqrt{A}}\right) - K_2 + 1\right] \tag{5}$$

where

ρ_1 is the soil resistivity encountered by grid conductors buried at depth h (in Ω·m)
ρ_a is the apparent soil resistivity as seen by a ground rod (in Ω·m)

NOTE—The resistivity at the lower portion of the rod is the most important, since most current is injected into the earth through the lower portion.

l_1 is the total length of grid conductors (in m)
l_2 is the average length of a ground rod (in m)
h is the depth of grid burial (in m)
h' is $\sqrt{d_1 \cdot h}$ for conductors buried at depth h, or
$0.5d_1$ for conductors at $h = 0$ (on the surface of the earth)
A is the area covered by a grid of dimensions $a \cdot b$ (in m^2)
a is the short-side grid length (in m)
b is the long-side grid length (in m)
n is the number of ground rods placed in area A
K_1,K_2 are constants related to the geometry of the system (see figures 2a and 2b)
d_1 is the diameter of the grid conductors (in m)
d_2 is the diameter of the ground rods (in m)

Rather than use R_2 in equation (2) to represent the perimeter ground rods, foundations may be modeled as a ring of closely spaced cylindrical concrete ground rods using the methods found in [B10].

Copyright The Institute of Electrical and Electronics Engineers, Inc.
Provided by IHS under license with IEEE
No reproduction or networking permitted without license from IHS Not for Resale

Similarly, a single point of ground resistance, such as a ground well, could be treated as a single ground rod with a resistance equal to its measured value.

Because equations (1) through (5) assume a single grid with a single type of ground rod, if there are multiple structures of different types that serve as equivalent ground rods, a resistance for each structure should be calculated and then the lowest resistance could be used to combine with the grid. This provides a conservative method for factoring in the effect of generating station structures. Alternatively, a method that can sometimes be used for combining grid resistances can be found in [B18].

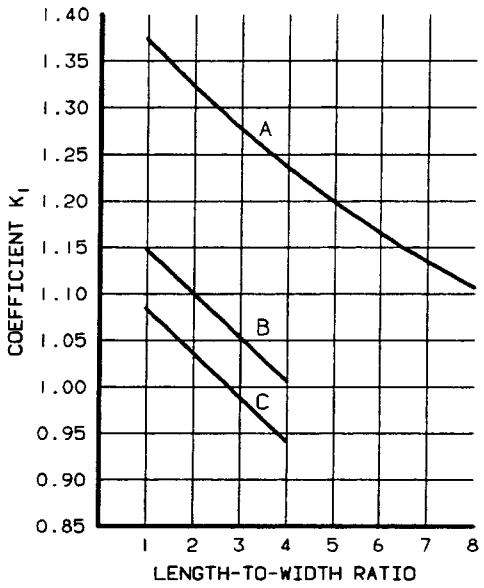

Figure 2a—Coefficient K_1 of Schwarz's formula

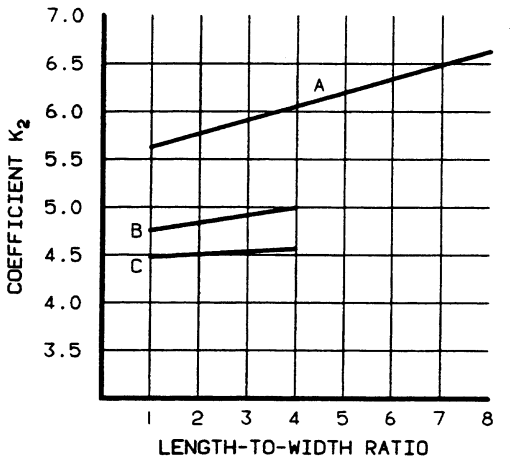

Figure 2b—Coefficient K_2 of Schwarz's formula

Copyright The Institute of Electrical and Electronics Engineers, Inc.
Provided by IHS under license with IEEE
No reproduction or networking permitted without license from IHS
Not for Resale

5.2.5.4 Determine the decrement factor (D_f)

The decrement factor (D_f) accounts for the asymmetrical fault current waveshape during the early cycles of a fault as a result of the dc current offset.

$$D_f = \sqrt{1 + \frac{T_a}{t_f}\left(1 - e^{\frac{-2t_f}{T_a}}\right)} \tag{6}$$

where

t_f is the fault duration (in s)

T_a is the time constant of the equivalent system subtransients (in s)

T_a= X"/ωR" for 60 Hz

T_a = X"/120πR"

where

X"/R" is the system X/R ratio at the fault location

Using the shortest primary breaker clearing time will result in the highest D_f.

5.2.5.5 Determine the corrective projection factor (C_p)

The corrective projection factor (C_p) is used to account for future increases in fault current. This is an extremely difficult factor to determine accurately. For example, even though the addition of a transmission line to a station may result in more total fault current, the amount of current injected into the earth may actually decrease because the overhead shield wires of the new transmission line present an additional conductive path for the fault current to follow.

Even though the planned ultimate station configuration should be considered during the initial design, this assumes that no major changes from the proposed final configuration would occur. Major design changes that increase the interrupting rating of a station beyond what was initially designed do, however, occur. These changes could include the expansion of the site to include additional generating units or transmission lines. Since changes to the grounding system are difficult and costly, it may be appropriate to be conservative in the original design. For the initial design, a suggested conservative value for C_p is 1.25. If a safe design can be produced with the resulting ground current (I_G), then the value for C_p can be increased in steps to investigate how much additional safety factor can be gained for a nominal additional cost in grounding materials.

5.2.6 Ground conductor sizing

Conductor size may be calculated using the method listed in 5.8.4. This method assumes that any conductor and its joints should be capable of conducting the entire ground fault current without exceeding a specified temperature.

A common assumption is that once the fault current from the equipment conductor(s) reaches the ground grid conductor to which it is attached, the fault current divides equally. Therefore, the grid conductors need to be sized to carry only one-half of the total fault current.

For mechanical reasons and long service life, the grid conductors are typically not smaller than 4/0.

Copyright The Institute of Electrical and Electronics Engineers, Inc.
Provided by IHS under license with IEEE
No reproduction or networking permitted without license from IHS Not for Resale

5.2.7 Maximum allowable touch and step voltages

The maximum allowable touch and step voltages are the criteria that should be met to insure a safe design. If the touch and step voltages of the grid design are below the maximum values, then the design is considered adequate. Personnel may still receive a shock during fault conditions, but that shock will not be sufficient to cause ventricular fibrillation. The lower the maximum allowable touch and step voltages, the more difficult it is to produce an adequate grid design. In most cases, the tolerable touch voltage will be the limiting factor.

The equations for the maximum allowable touch and step voltages are as follows:

$$E_{step50} = [1000 + 6C_s(h_s, K)\rho_s]\frac{0.116}{\sqrt{t_s}} \tag{7}$$

$$E_{touch50} = [1000 + 1.5C_s(h_s, K)\rho_s]\frac{0.116}{\sqrt{t_s}} \tag{8}$$

where

1000	is the body resistance (in Ω)
1.5	is the resistance of two feet in parallel
6	is the resistance of two feet in series
$C_s(h_s,K)$	is 1 if there is no protective surface layer or is determined from 5.2.7.2 if a protective surface layer is used
ρ_s	is the wet resistivity of the surface rock
t_s	is the shock duration (in s)
0.116	is a constant based on body weight of 50 kg

NOTE—A constant of 0.157 could also be used assuming a body weight of 70 kg.

5.2.7.1 Determine shock duration

The faster the clearing time of the fault, the less risk there is to personnel. Assuming that not all of the worst-case conditions that are built into the above equations will be present at the time of the fault, the worst-case primary clearing time for the substation may be used. A more conservative design would use the backup clearing time.

A typical range of values for fault clearing times for power plants is 0.15–0.5 s. In most cases, the primary clearing time will be less than 0.15 s if high-speed (2–3 cycle) breakers are used.

5.2.7.2 Determine the reduction factor (C_s)

The reflectivity coefficient K should first be calculated by the following equation:

$$K = \frac{\rho - \rho_s}{\rho + \rho_s} \tag{9}$$

The value for C_s can be read off the y-axis of figure 3 by finding the intersection of the appropriate curve for K with the thickness of the surface layer of rock or other surfacing material. If no surfacing material is used, the factor of C_s is set equal to 1.0.

Copyright The Institute of Electrical and Electronics Engineers, Inc.
Provided by IHS under license with IEEE
No reproduction or networking permitted without license from IHS
Not for Resale

The high-resistance surface layer is an important element of the outdoor grounding system because it allows higher step and touch voltages to be tolerated by increasing the resistance in series with the body resistance and thus reducing the amount of current that flows through the body.

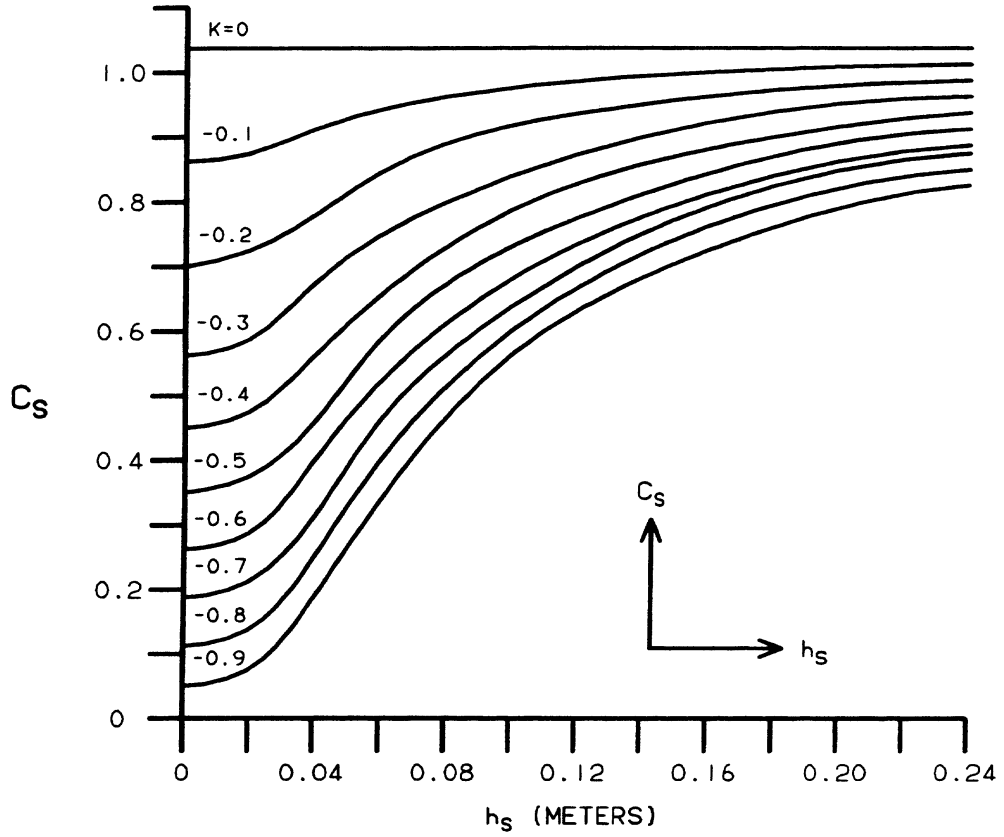

C_S is the reduction factor for derating the nominal value of the surface layer resistivity. It is 1 when the crushed stone resistivity is equal to the soil resistivity.

Figure 3—Reduction factor (C_s) as a function of the reflection factor (K) and the crushed rock layer thickness (h_s)

5.2.8 Preliminary grid design

Because this design guide addresses step and touch design criteria for those areas of concern outside of the main generating station building(s), this subclause is concerned with the design of the grids within those areas rather than the grid beneath the station itself. Based on an evaluation of the usage of exterior areas and equipment, selected areas should be provided with the grounding grid sized to step and touch voltage criteria.

5.2.8.1 Fault current in selected areas

The value for I_G that was calculated in 5.2.5 needs to be adjusted to reflect the amount of ground fault current that would be flowing through the ground grid in the areas of concern.

Copyright The Institute of Electrical and Electronics Engineers, Inc.
Provided by IHS under license with IEEE
No reproduction or networking permitted without license from IHS Not for Resale

Since the ground potential rise (GPR) over the entire station grounding system will be essentially uniform, this criteria of uniform GPR can be utilized to calculate the effective fault current that is injected into the area of a subset grid. The first step would be to calculate the GPR of the complete station grounding system. This is done by

$$GPR = I_g \times Z_{gt} \tag{10}$$

where

I_g is the maximum earth current
Z_{gt} is the resistance of the grid to remote earth

The maximum earth current (I_G) can be calculated by the following formula:

$$I_G = I_f \times S_f \times D_f \times C_p \tag{11}$$

where

I_f is the total zero-sequence rms fault current ($3I_0$)
S_f is the split factor or current division factor
D_f is the decrement factor
C_p is the corrective projection factor

For determining the ratio of fault current reduction the value for Z_{gt} can be assumed to be composed of only the grid resistance to remote earth (Z_g) rather than a parallel combination of the grid resistance and any alternate ground paths along transmission line overhead neutral wires.

The grid resistance to remote earth can be calculated by

$$Z_g = SR \times \left(\frac{1}{L} + \frac{1}{\sqrt{20A}} \times \left(1 + \frac{1}{1 + h \times \sqrt{\frac{20}{A}}} \right) \right) \tag{12}$$

where

A is the area of the grid (in m^2)
L is the total length of the buried horizontal conductors (in m)
h is the burial depth of the grid (in m) (typically = 0.5)
SR is the resistivity of the soil (in Ω·m)

Once the GPR value is determined for the complete station grounding system, the grid resistance value for the subset grid is then calculated. The equivalent current required to keep the GPR of this subset grid equal to the GPR of the complete station grounding system is then determined.

Note that this method requires a preliminary design to be developed in order to provide values for the equations utilized. Since changes in the grounding system design will inevitably occur as the design progresses, the current division determined by utilizing the preliminary design should be compared to the current division produced by the final design to see if there is a need to perform an iterative calculation. In general, this should not be necessary unless there have been major changes in the sizes of the main grounding system and the subset grid and other conservative factors have been employed (such as the corrective projection factor).

Copyright The Institute of Electrical and Electronics Engineers, Inc.
Provided by IHS under license with IEEE
No reproduction or networking permitted without license from IHS
Not for Resale

See annex C for a further discussion.

5.2.8.2 Grid layout

In order to use the simplified design equations, every mesh within the grid should be identical so that the step and touch voltage criteria are valid for every location within the grid. The grid should therefore consist of uniform square or rectangular meshes.

The following steps should be taken to arrive at a preliminary design for each of the exterior areas of concern:

a) For the chosen design area, determine the largest rectangle that will fit within its boundaries. This represents the four outer grid conductors for that area.
b) Place grid conductors to produce square meshes. The number of conductors in a particular direction should not exceed 25 as a result of limitations in the equations. For square areas, the number of conductors in each direction (n) will be equal. For rectangular areas, the creation of square meshes will result in a different number of conductors in each direction (n_1 and n_2).
c) Select a grid depth. A standard value for preliminary design is 0.5 m.
d) Place ground rods around the perimeter of the grid area. As a general rule, place a ground rod at every other perimeter grid connection and at the corners of the grid. Since ground rods discharge most of their current through their lower portion, they are effective in controlling the large current densities (and associated large step and touch potentials) that are present in the perimeter conductors during fault conditions. Ground rods also serve to stabilize the resistance of the grid by penetrating to deeper soil layers that do not exhibit large seasonal variations in resistivity.

NOTE—The recommendations included herein are based on a design including ground rods. Where rock foundations are present (where ground rods cannot be used) or at very small sites, variations of these equations, listed in IEEE Std 80-1986 may be used.

5.2.9 Calculated design mesh and step voltages

The mesh voltage represents the maximum touch voltage possible within a mesh of the grid. The equations for the mesh and step voltages resulting from the preliminary design are as follows:

$$E_m = \frac{\rho I_G K_m K_i}{L_c + 1.15 L_r} \tag{13}$$

$$E_s = \frac{\rho I_G K_s K_i}{L} \tag{14}$$

where

ρ is the soil resistivity (in Ω·m)
K_m is the mesh voltage geometric correction factor
K_s is the step voltage geometric correction factor
K_i is the correction factor that takes into account the increase in current at the extremities of the grid

NOTE—With this factor, the design is only considering the meshes that are on the perimeter of the grid, since this is where the worst step and touch voltages occur.

I_G is the maximum earth current for the section of the grounding area under study

NOTE—The maximum current for the entire station grounding area was calculated in 5.2.5. This value may be reduced to reflect only that percentage that will flow into the area of study as noted in 5.2.8.

Copyright The Institute of Electrical and Electronics Engineers, Inc.
Provided by IHS under license with IEEE
No reproduction or networking permitted without license from IHS Not for Resale

L_c is the total length of grid conductor (in m)

L_r is the total length of ground rods (in m)

L is $L_c + L_r$ for grids with few or no ground rods, and also for grids with ground rods predominantly around the perimeter

5.2.9.1 Calculation of coefficients K_m, K_s, and K_i

K_m, K_s, and K_i are coefficients that are defined and used in various formulas appearing in IEEE Std 80-1986. K_m and K_i are used in calculating the touch voltage. K_s and K_i are used in calculating the step voltage.

IEEE Std 80-1986 allows the determination of step and touch voltage coefficients by three methods: based on suggested values, based on models, and based on equations.

Equations are given in IEEE Std 80-1986 and in other references, such as "Simplified Analysis of Electrical Gradients Above a Ground Grid" [B19], for the determination of K_i, K_m, and K_s. However, great care should be taken with these equations because they yield considerably higher coefficients for large grid meshes, typically over 150 m (500 ft) wide, which may be associated with generating stations covering large areas.

The following equations may be used to calculate K_s, K_m, and K_i:

$$K_s = \frac{1}{\pi}\left[\frac{1}{2h} + \frac{1}{D+h} + \frac{1}{D}(1 - 0.5^{n-2})\right] \tag{15}$$

$$K_m = \frac{1}{2\pi}\left[\ln\left(\frac{D^2}{16hd} + \frac{(D+2h)^2}{8Dd} - \frac{h}{4d}\right) + \frac{K_{ii}}{K_h}\ln\frac{8}{\pi(2n-1)}\right] \tag{16}$$

$$K_i = 0.656 + 0.172n \tag{17}$$

The equations are valid for grid depths between 0.25 m and 2.50 m.

where

D is the spacing between parallel conductors (in m)

d is the diameter of the grid conductors (in m)

h is the depth of the grid (in m)

n is the number of parallel conductors in one direction

a) Use $n = \sqrt{n_1 \times n_2}$ when calculating K_m and K_i for the design mesh voltage

b) Use the greater of n_1 and n_2 when calculating K_s and K_i for the design step voltage

K_{ii} is the corrective weighting factor that adjusts the effects of inner conductors on the corner mesh

K_h is the corrective weighting factor that emphasizes the effect of grid depth

5.2.9.2 Comparison of calculated to maximum allowable values

If the calculated design touch and step voltages are less than the maximum allowable mesh voltage step voltages for each area studied, the preliminary designs are acceptable and the final design can begin. If the preliminary design is not adequate, it should be then modified in accordance with the recommendations given in 5.2.10.

Copyright The Institute of Electrical and Electronics Engineers, Inc.
Provided by IHS under license with IEEE
No reproduction or networking permitted without license from IHS
Not for Resale

5.2.10 Design modifications

If the calculated grid mesh and step voltages are greater than the maximum touch and step voltages, the preliminary design should then be modified. In order to reduce the grid mesh and step voltages, the following modifications can be tried:

a) In problem areas, decrease the mesh size by increasing the number of parallel conductors in each direction.
b) Increase the thickness of the layer of surface material. 15 cm (6 in) may be a practical limit for crushed rock.

The effects of these modifications are easily shown by the equations presented in the previous subclauses. Although there are other effective measures that can be taken to reduce the design mesh and step voltages, their effects cannot be modeled using the simplified design equations. These measures include

— Placing additional parallel conductors around the perimeter of the grid to produce smaller perimeter meshes. The smaller meshes will reduce the mesh and step voltages at the perimeter of the grid, but the resulting unequally sized meshes throughout the grid violate one of the assumptions of the simplified design equations.
— Diverting fault current to alternate paths. Diverting fault current is generally accomplished by insuring that all power line overhead shield wires that enter the substation are connected to the ground grid. The split factor calculated in 5.2.5.2 assumes that all shield wires have already been connected to the grid.
  Additional fault current may be diverted by using larger shield wires or shield wires of a higher conductivity. For very small station sites with high soil resistivities, this may be the only method that will bring the grid design into conformance with the safety criteria.
— If a two layer soil model indicates that the bottom soil layer has a lower resistivity than the upper soil layer, longer ground rods should be considered to reach the lower resistivity layer.
— At a site with high resistivity soil, ground wells can be installed to establish a point of low resistance.

Ground wells are normally used in areas that have a high upper soil resistivity and an area of low resistivity at depths where ground rods might not be driven. Ground wells are also used when rods cannot be driven to a minimum depth due to a rock layer (or other high-driving resistance material) near the surface. The size and depth of the well hole can vary from 3 in to a larger size and depth depending on the equipment available. A ground well will reduce the overall resistance by increasing the diameter of the electrode (rod plus backfill). A ground well extending into the water table will reduce seasonal variations in resistance and increase the current that the electrode can carry without the ground being overheated and drying out the well. The backfill is a slurry comprised of highly conductive clay (such as Bentonite) and water. The well will not require any maintenance nor become dry since the backfill will absorb moisture from the surrounding environment.

5.2.11 Ground grid under main station building

As noted in 5.2.2, personnel safety from step and touch voltages as a ground grid design criterion is generally not a concern inside buildings. The ground grid underneath the main station buildings is typically designed with a spacing that will provide an adequate number of connection points for ground grid risers rather than a spacing dictated by step and touch voltages.

5.2.12 Grounding system perimeter ground rods

The perimeter ground ring of the station grounding system should contain a number of ground rods to help minimize the effects of seasonal variations.

Copyright The Institute of Electrical and Electronics Engineers, Inc.
Provided by IHS under license with IEEE
No reproduction or networking permitted without license from IHS Not for Resale

5.3 Generator and isolated phase bus grounding

5.3.1 Generator grounding

Some means of grounding the main generator neutral is normally applied to most generating station units. The purpose of grounding the neutral is threefold: to limit the fault current flow during phase-to-ground faults, to allow for application of protective relaying to detect these faults, and to limit the transient and temporary overvoltages that may be caused by ground faults on the generator system.

Eight methods of grounding are identified by IEEE Std C37.101-1993:

a) High Resistance Grounded (Distribution-Transformer Grounded)
b) High Resistance Grounded (Neutral-Resistor Grounded)
c) Low Resistance Grounded (Neutral-Resistor Grounded)
d) Low Inductance Grounded (Neutral-Reactor Grounded)
e) Resonant Grounded (Ground Fault Neutralizer Grounded)
f) High Resistance Grounding—Transformer Grounded
g) Medium Resistance Grounding—Transformer Grounded
h) Ungrounded

For each case, the unit arrangement(s) and the reason for using this method will be given. Advantages and disadvantages of each method are presented in IEEE Std C37.101-1993.

IEEE Std C62.92-1987 provides means of estimating, by symmetrical component impedance ratios, the transient and temporary overvoltages that may occur on generator systems having various electrical characteristic classes. IEEE Std C62.92.2-1989 provides comprehensive guidance in the selection of generator neutral grounding device ratings with regard to overvoltage performance and insulation exposure for most practical applications.

5.3.1.1 High resistance grounded (distribution-transformer grounded)

This method is used on wye-wound unit connected generators and is illustrated in figure 4.

The main generator neutral is connected to ground through the primary of a single-phase transformer. A resistor is connected across the secondary of the transformer to provide a high-resistance neutral ground connection. The resistor and transformer are sized to produce an equivalent ground resistance numerically equal to or less than the total three-phase capacitive reactance to ground of the generator and other equipment connected to the generator bus. Most unit-connected generators are grounded in this manner. Using this type of grounding scheme, the fault current is typically limited to 5–10 A.

5.3.1.2 High resistance grounded (neutral-resistor grounded)

This functions equivalently to item a) in 5.3.1. The resistor should be sized without the benefit of a transformer to withstand the fault currents. Dielectrically, the resistor should meet the requirements of full phase-to-ground voltages or better.

5.3.1.3 Low resistance grounded (neutral-resistor grounded)

This is used when the generator is directly connected to the system without a step-up transformer. It permits a higher level of fault current, which is generally several hundred amperes to about 150% of rated machine current. It permits sufficient fault current to operate the differential relays for all machine faults except those near the machine neutral. This resistor should also meet dielectric requirements of full phase-to-ground voltages or better.

Copyright The Institute of Electrical and Electronics Engineers, Inc.
Provided by IHS under license with IEEE
No reproduction or networking permitted without license from IHS
Not for Resale

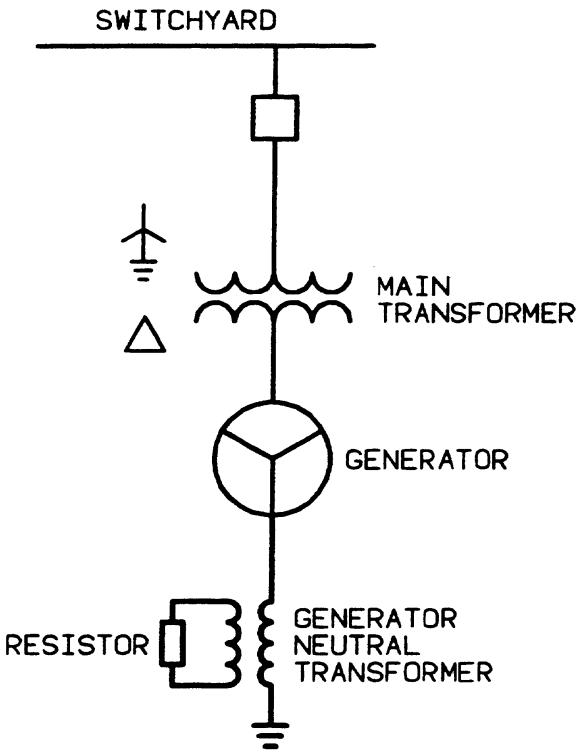

Figure 4—Unit connected generator with high resistance grounding

5.3.1.4 Low inductance grounded (neutral-reactor grounded)

This method is used similarly to the low resistance grounded scheme. Generally this scheme permits significant phase-to-ground fault current for all faults except those near the neutral. The reactor should also meet the dielectric requirements of full phase-to-ground voltage or better.

5.3.1.5 Resonant grounded (ground fault neutralizer grounded)

This method can be used for the unit connected generator(s). The main purpose of this method is to minimize phase-to-ground fault currents to low values (values that will not sustain an arc). The approach to accomplish this is to select the reactor on the secondary side of the distribution transformer so that its reactance is equal to one-third of the zero-sequence capacitive reactance of the generator bus.

5.3.1.6 High resistance grounding—transformer grounded

This scheme is used for delta-wound generator(s) since no machine neutral exists. This provides a generator system ground. A secondary resistor is applied to the grounding transformer to limit phase-to-ground current as in item a) in 5.3.1. The power dissipated in the effective resistance should be equal to or greater than the three-phase zero-sequence reactive voltampere loss in the zero-sequence capacitance of the generator system.

5.3.1.7 Medium resistance grounding—transformer grounded

This method is used in a manner similar to the previous method. In this case, however, the grounding resistance is chosen to provide adequate current for selective relaying purposes.

Copyright The Institute of Electrical and Electronics Engineers, Inc.
Provided by IHS under license with IEEE
No reproduction or networking permitted without license from IHS Not for Resale

5.3.1.8 Ungrounded

The ungrounded method is rarely used but provides lower fault current than the other schemes. This method creates the possibility of excessive transient overvoltages during switching operations or arcing ground faults.

5.3.2 Sizing of generator grounding

Most faults originate as phase-to-ground faults. Protective relays are usually connected to initiate a generator trip on detection of a ground fault.

The coincident occurrence of a ground fault in the generator with a ground fault in another phase of connected equipment beyond the generator terminals could produce a phase-to-phase fault current flowing through the generator frame ground connections equal to the combined phase fault contributions of the system, the generator, and the station auxiliaries. The system contributions typically will be interrupted within 20 cycles by protective devices while, depending on the fault location, the generator contribution may decay over a period of several seconds, as determined by machine time constants and the method of excitation removal.

Multiple ground connections adequate to carry this current for the fault duration should be provided from the station ground grid both to terminals provided by the manufacturer on the generator frame, and to the other connected equipment such as an isolated phase bus shorting plates, an enclosure, or a ground bus.

5.3.3 Grounding of enclosures, casings, and shafts

The enclosure for the generator neutral bus, including the connection from the enclosure to the neutral grounding equipment, should not be bonded to the generator frame and should be separately connected to the station ground grid.

The recommendations of the manufacturer should be followed for the grounding of turbine or other prime-mover casings consistent with system and safety objectives.

The shaft of steam turbines should be grounded in accordance with the recommendations of the manufacturer. Care should be taken to avoid shorting out insulated bearing pedestals and shaft seal carriers so as to prevent shaft circulating currents.

The exciter and all other auxiliaries associated with the generator should be grounded if they are not adequately bonded to the generator frame.

If shielded cables rather than an isolated phase bus are used for the line terminal connections, then the cable support system and any shield ground connections at the generator terminals should be isolated from the generator frame.

5.3.4 Isolated phase bus grounding

5.3.4.1 Introduction

A generally accepted method of connecting a generator to the main transformer, the unit auxiliary transformers, the surge protection equipment, and the voltage transformers is by means of an isolated phase bus. The generator neutral connection may also be an isolated phase bus.

Due to the large rated (load) currents, each phase has its own metallic enclosure (where the currents induced in the enclosure are very significant). The method used to minimize the circulating currents in the enclosures

Copyright The Institute of Electrical and Electronics Engineers, Inc.
Provided by IHS under license with IEEE
No reproduction or networking permitted without license from IHS
Not for Resale

of the generator, transformer, etc., is to have the isolated phase bus enclosures insulated from all equipment enclosures to which they are connected.

Ground fault current in the isolated phase bus is usually limited to low values by the generator grounding equipment (i.e., 5–10 A). Due to the isolation of the phases, a phase-to-phase fault cannot occur in this arrangement without involving the ground. However, if two simultaneous phase-to-ground faults were to occur in the bus and/or the connected equipment, very large phase-to-phase fault currents could result and flow through the grounding conductors and the ground grid.

5.3.4.2 Grounding of isolated phase bus with continuous enclosure

The three phases of the isolated phase bus enclosure should be connected together at each end to form a continuous current path. Circulating currents in the bus enclosure are almost equal to the bus phase currents and flow in the opposite direction. The resulting magnetic fields tend to cancel out. The bus duct does not require isolation from ground or from the surrounding structures due to the flux minimization. The ground connections and conductors should be sized adequately to handle maximum generator fault current. The grounding conductor will also continuously carry the enclosure unbalance current in that location. Allowances should be made in the design to minimize conductor temperature rise.

5.3.4.3 Grounding of bus with noncontinuous enclosure

When the enclosure is sectionalized by insulating joints, the induced currents are not as large as in the continuous enclosures, but voltages will appear across the insulating joints. In general, the recommendations of the manufacturer should be followed in this case to ensure adequate handling of the external fluxes and voltages.

Each enclosure section is connected to ground at one point only, including all the ends of the bus assembly. All connections to the ground bus should be sized to carry the maximum generator fault current. Circulating currents may flow in the grounding conductors; in a properly designed bus, these currents will not cause an objectionable temperature rise.

5.3.4.4 Grounding of isolated phase bus supports

In the case of the noncontinuous enclosure, the isolated phase bus is also electrically isolated from its supporting structures so that the circulating currents do not flow in these structures.

The indoor supports should be connected to the building ground grid; they need not be grounded separately if they are fastened to grounded building structures.

Outdoor supports should be grounded by connecting the base of each support to the ground grid.

5.3.4.5 Electromagnetic interference

Since very high currents are flowing in the enclosure of the isolated phase bus, care should be exercised in positioning protective and control devices that are sensitive to electromagnetic fields. Such devices should either be remotely located or properly shielded.

Also, any enclosures located in the vicinity of the bus should be carefully bonded to the grounded walkways and platforms in order to minimize the effects of induced voltages.

--`,,`-`-`,,`,,`,`,,`---
Copyright The Institute of Electrical and Electronics Engineers, Inc.
Provided by IHS under license with IEEE
No reproduction or networking permitted without license from IHS Not for Resale

5.4 Grounding of buildings, fences, and structures

5.4.1 General

The grounding of buildings, fences, and structures can be divided in two categories:

a) The building or structure can be accidentally touched by uninsulated high-voltage system conductors. In this case, the structure should be protected against the entire high voltage possibly transmitted and the associated ground fault currents.
b) The structure cannot be (accidentally) touched by the high-voltage wires. In this case, protection should be provided against
    1) Accidental touch with the station service voltage (see 5.5)
    2) Lightning strikes, including induced voltages (see 5.6)
    3) Buildup of static electricity (see 5.4.7)

5.4.2 Detailed grounding considerations

Once the basic grid designs for all areas of concern have been completed, all of the buildings, fences, and ancillary structures within the overall station grounding area should be connected to the station grounding system.

For the main station building, a ground ring should be installed around the outer wall at each floor level. Cross conductors that subdivide the entire floor into a grid should be added, where required, in order to provide connection points for grounding conductors that provide attachment points for equipment.

In other (support) buildings, as a minimum, each building within the grounding area should be ringed with a grounding conductor. Cross conductors that subdivide the floor area into grids may be added, where required, to provide connection points for equipment (on each floor). The spacing of these cross conductors would be determined by the amount of equipment that requires connection to the grid; the main station building may require conductors with a 10–30 m spacing, whereas an adjacent warehouse may not require any cross conductors.

Interconnections should then be made between the building rings and the grounding system; a minimum of two connections are recommended. Some ground rods may be added at this stage; four ground rods are suggested for major buildings and two ground rods for minor buildings.

Buildings remotely located from the main generating station buildings (either within or outside of the grounding system perimeter ground ring) may not require a building ground ring if there are no metallic ties with the station grounding system. In these instances, the building grounding requirements should conform to local electrical codes. If they are within the perimeter ground ring, they should have at least one connection to the ground grid system.

5.4.3 Equipment ground

A second independent grounding conductor should lead into the building with the auxiliary power supply to provide a ground fault return path. This grounding conductor should be routed close to the circuit conductors to minimize the reactance of the return path. The touch voltage would, therefore, be limited, since the equipment is also connected to the grounding electrodes. Where wet concrete is present (in contact with the earth), as in the basements of station or service buildings, the resistivity under the foot may be negligible. Metallic gratings and reinforced concrete floors also have negligible resistivity.

Copyright The Institute of Electrical and Electronics Engineers, Inc.
Provided by IHS under license with IEEE
No reproduction or networking permitted without license from IHS
Not for Resale

5.4.4 Conductor sizing

The grounding conductor sizing will be determined for each building category according to the available fault current. Where other voltage sources may appear, the associated fault currents should be considered. Where other voltage sources cannot appear on the structure, the conductor sizing may be done for the available station service voltage according to 5.8.

In all cases, the grounding conductor should be sized for mechanical reliability.

5.4.5 Metallic fences

Grounding of perimeter fences is important because it is an area where the general public can be exposed to dangerous touch voltages. Perimeter fences included within the ground grid area should have a conductor parallel to the fence on the outside at a distance of 0.5–1.5 m (1.5– 5 ft), with 1 m (3 ft) generally recommended. The fence and conductor should be bonded together and to the ground grid at frequent intervals.

Where a perimeter fence is to be located at the property border, the ground conductor should be located on the property line with the fence set back from the grid conductor in order to minimize touch voltage exposure to the public.

Where a perimeter fence is not included in the ground grid area, reference should be made to the precautions in IEEE Std 80-1986. Precautions should be taken, such as an isolated or insulating fence section, to prevent coupling dangerous grid voltages during ground faults to the fence outside the grid.

The practice of providing a driven ground rod at each fence post for approximately 7.5 m (25 ft) on either side of the outer conductors of each transmission line, with a grounding conductor parallel to the fence and connected to the rods, may be employed at each fence to provide an immediate and direct path to earth in the event of a fallen line.

Metallic fences located within the perimeter fence should have multiple connections to the grounding system.

5.4.6 Voltage gradients under transmission lines

Voltage gradients in the substation and particularly where the transmission lines cross the station perimeter grounding conductor will be much steeper than at locations remote from the high-voltage bus and lines. Since the transmission lines typically cross a perimeter fence, the recommendation in 5.4.5 should be applied.

5.4.7 Grounding for static discharges other than lightning

5.4.7.1 Coal-handling areas

In coal-handling areas, exposed noncurrent-carrying metal parts of equipment, such as frames or metal exteriors of motors, lighting fixtures, other utilization equipment, cabinets, and conduits, should be grounded as indicated in 5.5.

5.4.7.2 Hydrogen storage areas

In hydrogen storage areas, the hydrogen container and the associated piping should be electrically continuous and grounded. Additional information on hydrogen systems may be found in NFPA 50A-1994.

Copyright The Institute of Electrical and Electronics Engineers, Inc.
Provided by IHS under license with IEEE
No reproduction or networking permitted without license from IHS Not for Resale

5.4.7.3 Nonconductive and semiconductive equipment and material

For guidance in control of static electricity on nonconductive equipment, such as conveyors, and on nonconductive or semiconductive material, refer to NFPA 77-1993.

5.5 Grounding of generating station auxiliaries

5.5.1 General

The purpose of this subclause is to provide guidance for grounding of

a) Electrical equipment included in station auxiliaries
b) Structures and nonelectrical equipment related to the station auxiliaries
c) Auxiliary buildings

The grounding design of generating station auxiliaries is not an isolated process and should be done in conjunction with

— Selecting the approach for grounding the neutral of the auxiliary power source
— Selecting the type of power cables (three or four-wire)
— Designing the ground fault protection
— Deciding on the level of personnel safety desired

5.5.2 Neutral grounding of station auxiliaries

The grounding of generating station auxiliaries is highly dependent on the approach used for grounding the neutral of station auxiliary power sources. These will vary in any one station between the different voltage systems that are present. The different possibilities are listed and discussed in IEEE Std C62.92-1987, IEEE Std C62.92.3-1993, IEEE Std 142-1991, and IEEE Std 666-1991. The following basic approaches have been used (see table 1 of IEEE Std C62.92.3-1993 for a historical record of station auxiliary system grounding):

a) *Solid Grounding*. The neutral is directly connected to ground (with no impedance inserted). In case of a ground fault, the fault current is large enough to trip the faulty circuit by the short-circuit protection systems.
b) *Low Impedance (Resistance) Grounding*. The neutral is usually connected to ground through a resistance that (somewhat) limits the damage caused by a ground fault current; the ground fault current is still large enough to trip the faulty circuit by the short-circuit protection systems.
c) *Moderately High Impedance (Resistance) Grounding With Trip Protection*. For low-voltage systems, up to 600 V, the neutral is connected to ground through a high impedance or resistance that limits the ground fault current to low values (less than 50 A); special ground fault protection is installed in order to trip the faulty circuit. This has the advantage of enabling the use of low-current devices, such as contactors, for interrupting a ground fault current. This greatly simplifies the resetting process.
d) *High Impedance (Resistance) Grounding With Alarm Protection*. The neutral is connected to ground through a high impedance or resistance that limits the ground fault current to very low values (less than 10 A). In this approach, the circuit may remain energized until the operator decides to trip it; however, if a second ground fault occurs in the meantime, it will become a double phase-to-ground fault.
e) *Ungrounded Neutral*. The neutral is isolated from ground; the ground fault current is dictated by the system capacitance to ground. While trip and alarm protections may be installed, it is more difficult to obtain an accurate protection of performance.

--`,,`-`-`,,`,,`,`,,`---

Copyright The Institute of Electrical and Electronics Engineers, Inc.
Provided by IHS under license with IEEE
No reproduction or networking permitted without license from IHS
Not for Resale

The neutral grounding approach used at each voltage level may differ. For example, it may be desirable to use high-resistance grounding at a medium-voltage level to permit continuous operation and low-resistance grounding at low-voltage levels where plant reliability is not adversely affected by equipment tripping. Also, it is possible to use a different approach for subsystems, such as lighting supplies. In all cases, the grounding design should be consistent with the neutral grounding approach used.

For simplicity, the systems with solid grounding, low impedance grounding, or moderately high impedance grounding of the neutral with trip protection will be referred to as systems with ground fault trip. Systems with high impedance grounding or ungrounded neutrals will be designated as systems with ground fault alarm.

In systems with ground fault trip, equipment enclosures may be subjected to a significant potential to ground only for the short time (0.1–1 s) from the occurence of a ground fault until the time when the circuit is tripped. In systems with ground fault alarm, equipment enclosures may be subjected to such potentials for long periods of time.

5.5.3 Arrangement of grounding conductors

The arrangement of grounding conductors should meet all the grounding principles listed in 5.1. The four arrangements listed in the following subclauses are possible. The last arrangement is recommended.

5.5.3.1 Grounding with common equipment grounding conductor run to the neutral ground

This is a preferred arrangement for systems with ground fault trip since it provides a good return path for the ground fault current and also provides a ground for equipment enclosures. However, the equipment ground may not provide for safety because of the possible differential in voltage between the enclosure and local ground. Single- or three- conductor power cables are used as illustrated in figure 5.

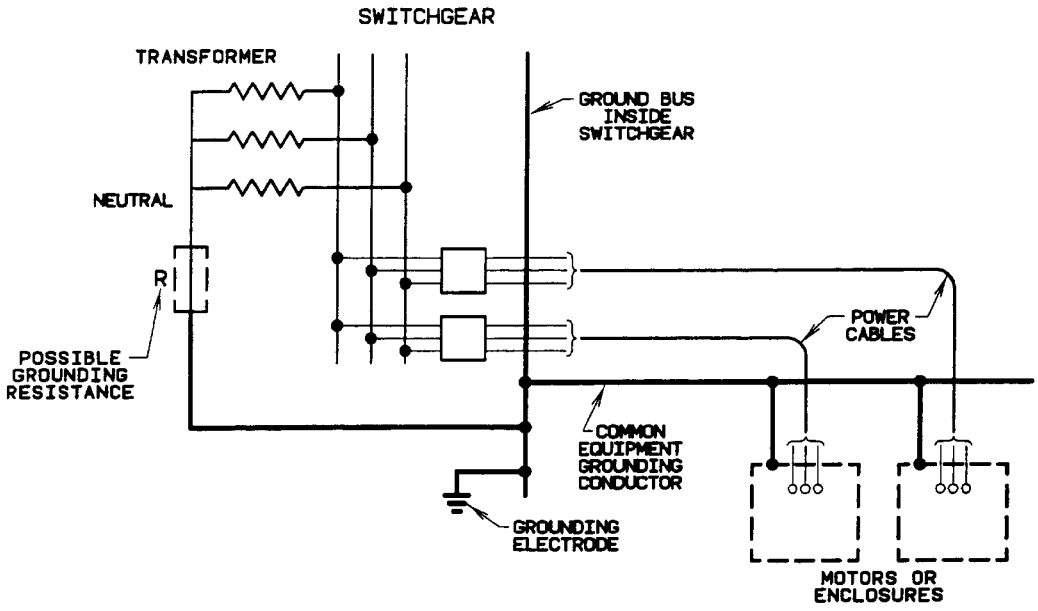

Figure 5—Grounding with common equipment grounding conductor run to the neutral ground

Copyright The Institute of Electrical and Electronics Engineers, Inc.
Provided by IHS under license with IEEE
No reproduction or networking permitted without license from IHS Not for Resale

It is recommended that a main ground bus be provided. This may be the switchgear or the motor control center ground bus to which the supply transformer neutral is connected (solidly or through impedance) and that is solidly connected to the grounding grid. It should be noted that in systems with impedance grounding, the grounding conductors should be connected to the neutral ground and not to the transformer neutral.

From this main ground bus, a grounding conductor is run within the same raceway as the circuit conductors.

A common equipment grounding conductor could be used for all cables in the same tray (it may also be used to ground the cable tray). It is usually a bare stranded copper conductor connected to the main ground bus and fastened to the cable tray.

Where a single cable leaves the cable tray, a branch grounding conductor is added and connected to the common grounding conductor and to the equipment enclosure or motor terminal box. The separate grounding conductor is run in the same conduit or cable duct as the outgoing power cable and is also used to ground the conduit or cable duct.

It is important that the ground conductors be run as close as possible to the circuit conductors, since this reduces the reactance of the fault current return path.

When the cable is run underground, this grounding conductor should be located in the same direct burial or duct bank run as the cable. However, in this case, grounding with individual cable ground conductors (see 5.5.3.2) should be considered to avoid installation and bonding complications.

In order to minimize the amount of common grounding conductor that is required, it is possible to use the cable trays, metallic raceways, and conduits as a grounding conductor; however, this arrangement should be used only if all the conditions listed below are met:

a) The trays/raceways/conduits are capable of carrying the largest fault current to which they may be subjected (see 5.8.4). This may prove difficult for systems with a solidly grounded neutral or a ground fault alarm.
b) The trays/raceways/conduits form a reliable continuous current-carrying path. Mechanical joints do not necessarily form reliable electrical joints since a single layer of paint may add a very high resistance. All joints not electrically tested should be electrically bonded.
c) Requirement b) applies to all joints on the cable route, including vertical risers, passages through floors and walls, branching take-offs, flexible conduits, etc.
d) Reliable electrical connections are made from the cable trays to the main ground bus and to all equipment enclosures.
e) Changes after installation that may interrupt the continuous electrical path are prevented.

Where aluminum cable trays are used, the first two conditions are easily met. The tray and its joints should be proven by tests that they can withstand the ground fault current. Care should be exercised at bondings and electrical connections using copper or in the installation of copper ground conductors, in order to prevent corrosion. Making sure that the ground path is continuous and not subjected to future changes may be a challenge. Where such changes are even a remote possibility, it is recommended that a green stripe be painted on the entire grounding route; it should be stencilled “grounding path.” If there is doubt, a dedicated ground connection should be installed.

Where steel cable trays are used, all conditions are difficult to meet, and the use of separate copper conductors is recommended. Possible problems related to this arrangement are possible large touch potentials at remote locations.

Copyright The Institute of Electrical and Electronics Engineers, Inc.
Provided by IHS under license with IEEE
No reproduction or networking permitted without license from IHS
Not for Resale

5.5.3.2 Grounding with individual (cable) equipment grounding conductors run to the neutral ground

This is also a suggested arrangement for systems with ground fault trip since it provides a good return path for the ground fault current. As illustrated in figure 6, four-conductor power cables or four conductors in the same raceway should be used.

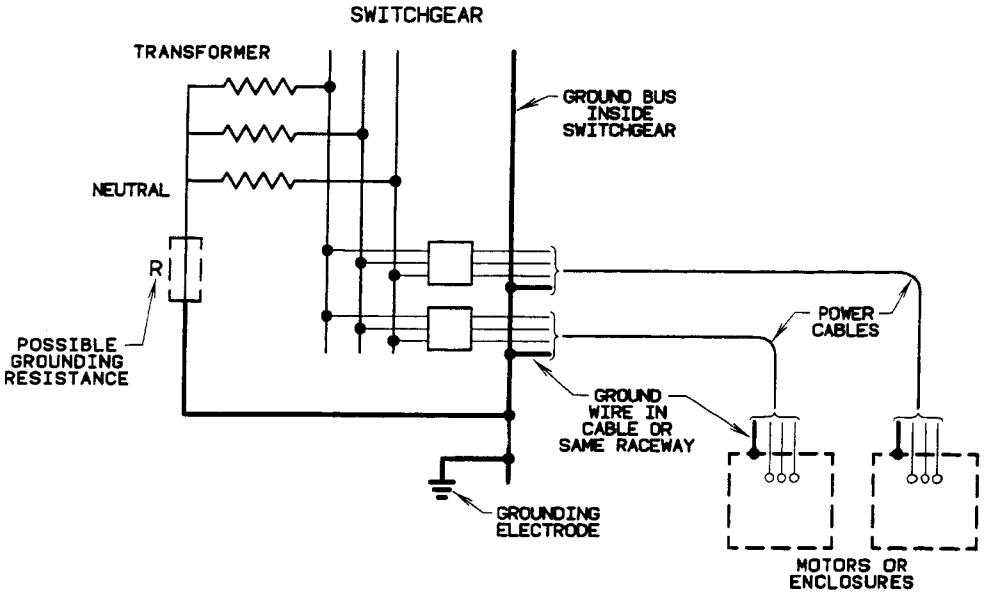

Figure 6—Grounding with individual (cable) equipment grounding conductors run to the neutral ground

It is recommended that a main ground bus be provided. This may be the switchgear or the motor control center ground bus to which the supply transformer neutral is connected (solidly or through impedance) and that is solidly connected to the grounding grid. The fourth wire in each cable or raceway is used as a grounding conductor and is connected to the main ground bus and to the equipment enclosure. It should be noted that in systems with (low or high) impedance grounding, the grounding conductors should be connected to the neutral ground and not to the transformer neutral.

This arrangement has the following advantages:

a) It is more reliable, since each piece of equipment is grounded by its own conductor; there are no multiple connections.

b) It ensures that the grounding conductor is running close to the circuit conductors.

c) It may save on installation costs since there is no need to install the special ground conductor; however, cable trays still need to be grounded.

d) It is particularly recommended for single, isolated loads, supplied by long cables.

A possible problem with this arrangement is where branch circuits are long and the conductor cross-sectional area is small. The voltage drop caused by ground fault current on the grounding conductor may be even larger than with a common conductor (which usually has a larger cross-section).

Copyright The Institute of Electrical and Electronics Engineers, Inc.
Provided by IHS under license with IEEE
No reproduction or networking permitted without license from IHS Not for Resale

Also (since each circuit has its own grounding conductor), this arrangement uses more copper. The decision whether to use this arrangement or the one with a common conductor is based on economics and code compliance requirements.

In a three-wire (no neutral) distribution system, the fourth wire may be used as an equipment grounding conductor, no matter what grounding approach is used.

Cable shields, as a rule, should not be used as the grounding conductor; if, however, there is the intent to use a cable shield, this should be large enough to meet the sizing requirements of 5.8.

The use of the interlocking armor of cables that have interlocking armor and an inner jacket is acceptable for grounding, provided that it meets the sizing requirements of 5.8.

Where aluminum-sheathed cables are used, the use of a separate ground conductor is still recommended.

5.5.3.3 Grounding with only safety grounding conductor run with conductors run to the local grounding grid

The main advantage of this arrangement is that it minimizes the touch potential, since it connects together the equipment and the structures on which personnel may stand. For this reason, it is a suggested arrangement for systems with ground fault alarm. This arrangement is also used for grounding the station structures, auxiliary buildings, and all noncurrent-carrying accessible conductive materials that may be subjected to electrostatic or electromagnetic induction. It is illustrated in figure 7.

The grounding conductor is run directly to the closest grounding electrode or to the ground grid connecting these electrodes. The use of dedicated grounding conductors is recommended.

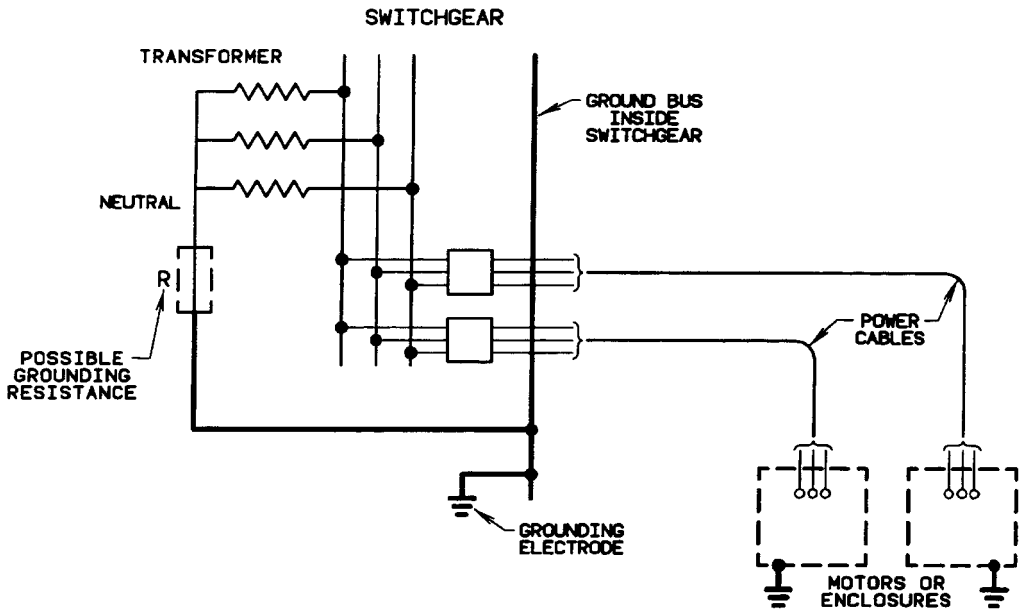

Figure 7—Safety grounding only, with conductors run to the ground grid

Copyright The Institute of Electrical and Electronics Engineers, Inc.
Provided by IHS under license with IEEE
No reproduction or networking permitted without license from IHS
Not for Resale

The use of structural metal frames as grounding conductors is appealing due to their large size. This is acceptable provided that the following conditions are met:

a) The cross-section is adequate for the ground fault currents that may occur.
b) All junctions are bonded with adequately sized connections. (As a reminder, a single layer of paint may create considerable contact resistance.) If testing is not possible, the contacts should be cleaned and protected with contact grease; the contact area should be 50% larger than the (required) cross-section.
c) The structure is permanent and not subjected to changes that may result in the interruption of the ground connection (e.g., a new support structure, addition of anti-vibrating rubber pads, insertion of expansion joints, etc.). Where such changes are possibile, a green stripe may be painted on the entire grounding route and stencilled “ground path.” If there is doubt, a dedicated ground connection should be installed.

The connection of the grounding conductors should match the grounded materials and the grounding grid without incurring corrosion. Soldering is acceptable only for lead sheaths.

This arrangement may not provide a good return path for ground fault currents, since the ground impedance is also inserted in the circuit and the loop formed can result in a high reactance. In alarmed systems, the ground connection should be designed to withstand the double phase-to-ground fault current.

5.5.3.4 Dual grounding with an equipment ground and local safety ground (additional connection to the grounding grid)

This arrangement is recommended in all cases. It provides both a reliable ground fault current return path and a good limiting of the touch potential. It is illustrated in figure 8.

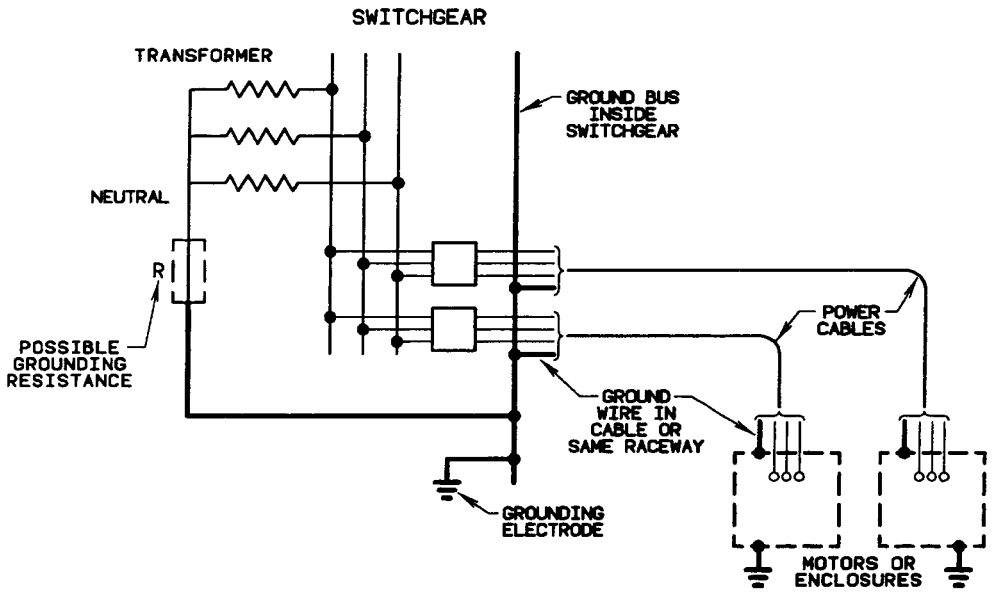

Figure 8—Grounding with equipment ground and safety ground

The arrangement combines the connection to neutral ground as listed in 5.5.3.1 or 5.5.3.2 with the safety connection to the grounding grid per 5.5.3.3.

Copyright The Institute of Electrical and Electronics Engineers, Inc.
Provided by IHS under license with IEEE
No reproduction or networking permitted without license from IHS Not for Resale

The connection to the neutral ground provides a good return path for the ground fault current while the connection to the grounding grid limits the touch voltage. The only disadvantage is the higher cost.

When this arrangement is used, only the conductors running to the neutral ground need to be sized for protection and ground fault current.

5.5.4 Selection of grounding conductors

The selection of grounding conductors includes the selection of conductor material and the steps in grounding conductor sizing, as listed in 5.8.

5.5.5 Specific auxiliary equipment grounding requirements

As a rule, any metallic enclosure and exposed noncurrent-carrying conductive materials that may become energized as a result of an insulation failure should be grounded in accordance with 5.5.3. This applies, for example, to motor frames, local distribution panels, enclosures, and cable trays. In addition, the following subclauses contain some specific equipment requirements.

5.5.5.1 Auxiliary transformers

The tanks of auxiliary transformers that act as a power source for the station auxiliary power systems should be connected to the grounding grid by separate grounding conductors.

The neutrals of the secondary winding should be connected to ground according to the approach selected (see 5.5.2). No disconnecting device should be inserted in this connection; opening this connection will change the grounding approach into an “ungrounded neutral,” and the entire grounding and protection system may become useless.

5.5.5.2 Switchgear and motor control centers

A ground bus should be installed for the total length of the switchgear or motor control center. This ground bus will serve a dual purpose:

a) As a main ground bus (see 5.5.3.1 and 5.5.3.2) for connecting the grounding conductors to all motors or other loads supplied by this switchgear or motor control center
b) As a switchgear or motor control center ground bus, to which all metallic structures, enclosures, handles, and doors are connected. Secondaries of instrument transformers and instrument cases may also be connected to this ground bus if so provided in the controls design.

The ground bus should be securely connected to the grounding grid, preferably by two grounding conductors usually located at the two ends of the ground bus.

If a four-wire system is used, a neutral bus insulated from ground may also be installed.

5.5.5.3 Current transformers

The current transformers should be grounded twice:

a) The frame or the grounding terminal (as provided) should be connected to the grounding grid.
b) The secondary winding should be grounded as provided in the protection and controls design.

Copyright The Institute of Electrical and Electronics Engineers, Inc.
Provided by IHS under license with IEEE
No reproduction or networking permitted without license from IHS
Not for Resale

5.5.5.4 Variable frequency drives

Each variable frequency drive should be regarded as a separate system, including the isolating transformer when provided, similar to a system with ungrounded neutral. The following actions are suggested:

a) The drive should include protection that will trip the drive system in case of a ground fault.
b) The motor frame and the drive enclosure should be connected to the grounding grid.

5.5.5.5 Metal-enclosed bus

A grounding conductor should run for the full length of the bus. Alternatively, the bus enclosure may be used as grounding conductor, provided that the enclosure and its joints have the capacity to carry the maximum available ground fault current (proven by tests). The grounding conductor (or the bus enclosure) should be connected to the ground bus of all connected equipment (or to the ground grid at the transformer end).

Indoor supports may be considered grounded by being fastened to the grounded building steel. Outdoor supports should be grounded by a connection to the ground grid at the base of each support.

5.5.5.6 Cable trays

Cable trays may fall into one of the two following categories:

a) When grounding with a common conductor run to the system ground (per 5.2.4.1) is used, then the tray may be grounded by simply bonding the grounding conductor to the cable tray. Where multiple trays are running on the same route, the common conductor may be installed in one of the trays, and vertical bonds should be made to each of the tray sections.
b) When any other grounding arrangement is used, all components of the cable tray should be grounded like any motor or distribution panel. A cable tray may not be considered a “structure” since a cable failure may energize it.

5.5.5.7 Surge arresters

The grounding conductor of the surge arresters should run directly to the ground grid on the shortest possible route and should have adequate short-time ampacity under conditions of excess current caused by or following a surge. The short-time current pulses may cause significant interference in the controls, so these conductors should not run close to control circuits or cables.

5.5.5.8 Structures

Any structures that cannot become energized as a result of electrical equipment failure, e.g., structural support members, metallic housings on rooftops, metallic door frames, control and protection panels, pipes, and ventilation ducts and enclosures, need only be connected to the grounding grid. The conductors used for this connection need to be sized only for mechanical reliability.

When a structure is supporting equipment that is grounded, then it needs only to be connected to the grounding grid.

5.5.5.9 Power cable shields

Metallic cable shields, unless effectively grounded, may attain dangerous voltages to ground. Such voltages may appear due to insulation failure, electrostatic induction, current flow in the shield, or ground potential rise. Insulation shields should be connected as follows:

a) On three-conductor cables, the shield and/or the armor should be grounded at both ends.

Copyright The Institute of Electrical and Electronics Engineers, Inc.
Provided by IHS under license with IEEE
No reproduction or networking permitted without license from IHS Not for Resale

b) On single-conductor cables, the shield and/or the armor should be grounded in such a way as to prevent induced circulating currents and to limit the shield potential to less than 25 V. This is accomplished in shorter cables by grounding at the supply end only.

Where core balance current transformers are used and the shield or armor is passed through the current transformer, the grounding wire for the shield or armor or stress relief cone should be passed back through the core balance transformer before being connected to ground.

5.5.6 Protection and controls

IEEE Std 1050-1989 should be consulted for protection and controls. In addition to those requirements, the following possible problem should be addressed.

Many control grounding designs require that all equipment be connected to a single control ground. This is often referred to as a “dc ground” or an “instrument ground.” In power generating stations, this means that the “control ground” (connected, for example, to the control room ground) may be quite remote from the local safety ground (connected, for example, to the pumphouse ground), and a potential difference may exist. It follows that when someone simultaneously touches the “control ground” and the panel enclosure, he or she may be subjected to a significant touch voltage. One way of addressing this problem is to reconnect the equipment control ground termination to the local safety ground when the equipment is out of service for maintenance.

There is an increasing concern for this ground to be as “clean” as possible; control system manufacturers will often demand an independent ground point quite separate from the ground grid. This can be a safety hazard and is now widely recognized as an unacceptable practice. See IEEE Std 1100-1992 for additional discussion. It is becoming common practice to run an insulated ground cable to the main ground grid in order to provide this “clean” single point ground.

A link to break this tie could be used to provide isolation for control system test purposes, but obviously there would need to be caution in ensuring that the link is closed during normal operation. While the link is open, caution should be exercised in working on the control apparatus since during a transient fault condition the two ground points may be at different potentials.

5.6 Lightning protection for generating station structures

5.6.1 General

The purpose of this subclause is to provide guidance for the grounding of and lightning protection for generating station structures. It is intended that this material serve as a guide for establishing requirements for any station.

Lightning produces both direct effects and indirect effects. The direct effects include burning, blasting, ignition of combustibles, electrocution, and other obvious manifestations of lightning. This guide discusses practices to protect against these direct effects. The indirect effects involve electromagnetic fields resulting from large currents associated with lightning. Indirect effects can damage or cause misoperation of control equipment, with consequences more costly than the direct effects. This guide is not intended to deal with indirect effects. Further guidance may be found in IEEE Std 1050-1989 and NFPA 780-1992.

5.6.2 Types of structures

The typical generating station is composed of many different types of structures that vary in material construction and usage. These varying types of material and usage largely determine the extent and method of grounding and lightning protection to be used.

--`,,`-`-`,,`,,`,`,,`---

Copyright The Institute of Electrical and Electronics Engineers, Inc.
Provided by IHS under license with IEEE
No reproduction or networking permitted without license from IHS
Not for Resale

Structure grounding is done for two reasons: to provide safety for personnel and to provide protection for buildings and associated installations. Care should be taken to avoid excessive increases in voltage during faults and static discharges such as lightning.

Metal buildings and structures may offer a satisfactory discharge path for lightning strokes provided certain conditions are met (see 5.6.5), and they may require nothing more than the provision of multiple grounds at the structure base.

Nonmetallic structures composed mostly of nonconducting materials may require an extensive lightning-protection system.

Structure usage should be considered in the choice of lightning-protection method. For a structure providing a very important function, such as a microwave tower, more extensive lightning protection may be required than for a structure like a minor storage building.

5.6.3 Factors governing the decision whether or not to provide lightning protection

In establishing the requirement for and extent of lightning-protection design, the following factors should be taken into account. See NFPA 780-1992 for a method of evaluating relative risk.

a) *Frequency and Severity of Thunderstorms*. The average number of storms per year may reach ninety in some areas of the United States and may be as few as five in other areas. This information may be obtained from appropriate isokeraunic maps for the area. In some areas, the severity of storms is much greater than others and is not directly related to the frequency. A few severe thunderstorms a season may make the need for protection greater than a relatively large number of storms of moderate lightning intensity. In general, each station should have a thorough lightning protection system regardless of its location, since even a single trip resulting from lightning may be unacceptable for a base load unit (See [B9]).

b) *Value of the Building and Contents*.

c) *Personnel Hazards*. Casualties within buildings are rare because of the shielding effect provided by the structural materials in most buildings. Many buildings, however, exist with less desirable shielding material, and a stroke of lightning to such a building constitutes a serious danger to the occupants.

d) *Exposure*. The relative exposure of a building to lightning strokes should be considered. A building surrounded by other tall structures is much less exposed to lightning strokes than a building in open terrain, since the lightning strokes may be diverted to the other tall structures. In essence, a zone of protection exists around a structure defined in a similar manner as that around masts or overhead ground wires (see 5.6.5). Thus, an outlying pump structure may be more exposed than buildings near the stack at a fossil-fueled station or near other tall buildings.

e) *Economics*. Probably the most important consideration on the generating station site is the cost of the indirect losses. If lightning causes a forced shutdown of a generating station, the economic consequences are almost always greater than the direct loss incurred. This should be taken into consideration in designing the lightning-protection system.

f) *Type of Construction*.

5.6.4 Planning an air terminal lightning-protection system

The most frequently used lightning-protection method for buildings is the air terminal system. Air terminal protection consists of a grouping of short masts (air terminals) at proper locations on a structure.

A more detailed description of air terminal system of lightning protection may be found in NFPA 780-1992.

--`,,`-`-`,,`,,`,`,,`---

Copyright The Institute of Electrical and Electronics Engineers, Inc.
Provided by IHS under license with IEEE
No reproduction or networking permitted without license from IHS Not for Resale

5.6.5 Other methods of protection

Other frequently used methods of lightning protection beside air terminals are listed in the following subclauses.

5.6.5.1 Masts

For masts, the zone of protection is defined by a 30 m (100 ft) radius arc that passes through the tip of the mast and is tangent to the ground (see figure 9). Note that for masts greater than 30 m (100 ft) in height, the 30 m radius arc is tangent to the mast at 30 m above ground. Thus mast height greater than 30 m (100 ft) will not increase the zone of protection.

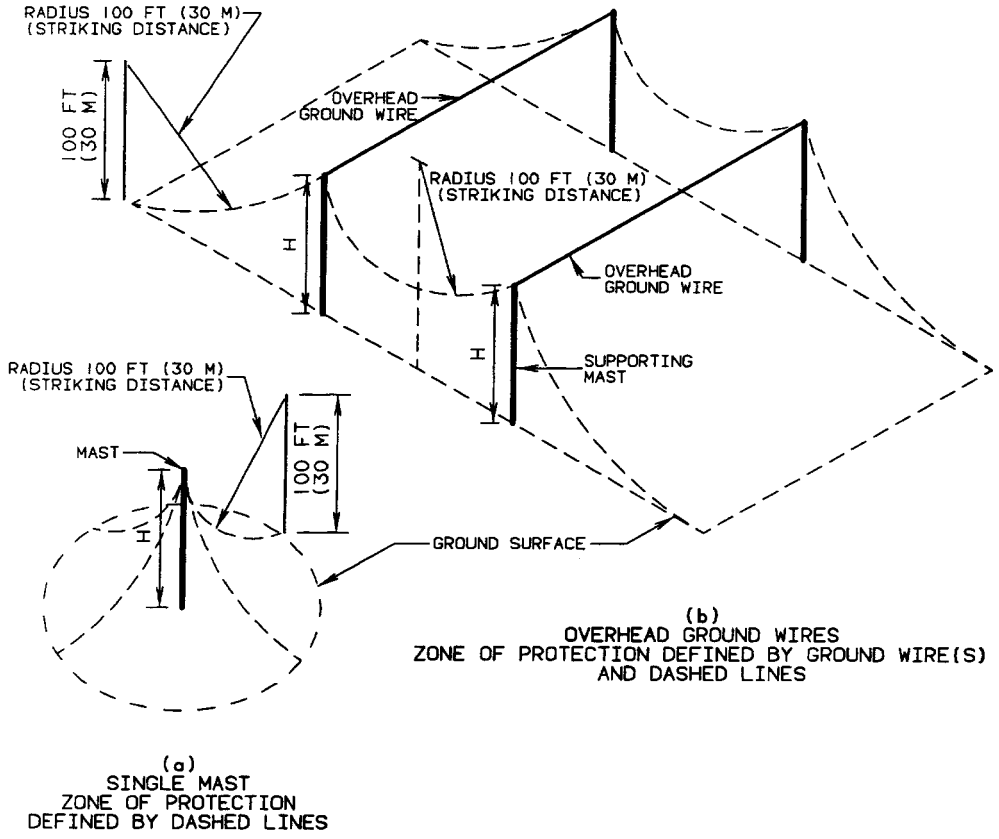

Reprinted with permission from NFPA 780, *Lightning Protection Code*, Copyright © 1992, National Fire Protection Association, Quincy, MA 02269. This reprinted material is not the complete and official position of the National Fire Protection Association on the referenced subject, which is represented only by the standard in its entirety.

Figure 9—Zone of protection for mast height

The space enclosed by the zone of protection has been found to be substantially immune to direct strokes of lightning. No part of the structure to be protected should extend outside of the zone of protection. If more than one rod or mast is used, the shielded region between them is somewhat greater than the total of the shielded regions of all the rods or masts considered individually. Masts that are separate from the structure to be protected should not be less than the bonding distance or the side flash distance, as defined in subclauses 3.22, 3.23, and 3.24 of NFPA 780-1992, from the protected structure.

Copyright The Institute of Electrical and Electronics Engineers, Inc.
Provided by IHS under license with IEEE
No reproduction or networking permitted without license from IHS
Not for Resale

The masts should be permanently grounded to a ground rod, counterpoise, or ground mat system at the base of the mast and connected to the ground system of the structure to be protected.

5.6.5.2 Masts and overhead ground wires

The zone of protection of overhead ground wires less than 15 m (50 ft) high is conventionally taken as a triangular prism or wedge. One-half of the base of the wedge (H) equal to the height of the lowest point of an overhead ground wire has been found to be satisfactory. For a ground wire more than 15 m (50 ft) above ground, the zone of protection is based on a 30 m (100 ft) radius (see figure 9). The supporting masts should have the same clearance from the protected structure as already given for masts alone.

The minimum clearance between overhead ground wires and the highest projection of the structure should not be less than the bonding distance or the side flash distance as defined in subclauses 3.22, 3.23, and 3.24 of NFPA 780-1992.

Masts used either separately or with overhead ground wires may be of wood, provided the mast is equipped with a proper down conductor. An approved type of air terminal should be securely mounted to the top of the pole extending 0.6 m (2 ft) above the top of the pole and connected to grounded electrodes. In case of an overhead ground wire system, the pole guy wire may be used as the down conductor if it is not insulated. It is usually recommended, however, that a separate down conductor be used. For metallic masts, the air terminal and the down conductor are not required, but the masts should be connected directly to the grounding system.

5.6.5.3 Structure grounding

Structure grounding with no other protection can be used on all metal structures of sufficient strength and mass to withstand a direct stroke without burnthrough or other damage. It has been demonstrated that structures constructed of exposed steel plate with a minimum thickness of 4.8 mm (3/16 in) will provide this type of protection.

5.6.5.4 Other tall structures

Shielding against lightning strokes by use of other tall structures can be used if a structure is within the zone of protection provided by another structure. In these instances, no other means of protection from lightning is required other than structure grounding. Examples of areas of lower roofs and structures protected by higher structures may be found in NFPA 780-1992. Generally, buildings that do not exceed 7.5 m (25 ft) in height are considered to protect lower structures in a one-to-two zone of protection. Structures that do not exceed 15 m (50 ft) in height are considered to protect lower structures in a one-to-one zone of protection. Buildings that exceed lower structures if the lower structure lies in the area beneath an arc 45 m (150 ft) in radius where the arc passes through the highest point of (or is tangent to) the taller structure and is tangent to the ground or roof of a lower structure are considered to protect the lower structure.

5.6.6 Materials used in lightning protection

Lightning-protection equipment should be a very low-maintenance item, and care should be exercised in choosing the proper material to fit the conditions of installation. Materials are classified into two categories that relate to the protected structure height.

a) *Materials, Class I*. A Class I building is one that is less than 23 m (75 ft) in height.
b) *Materials, Class II*. A Class II building is one that is more than 23 m (75 ft) in height or one that has a structural steel frame of any height whose steel may be substituted for lightning down conductors. NFPA 780-1992 gives detailed requirements for each material class.

Copyright The Institute of Electrical and Electronics Engineers, Inc.
Provided by IHS under license with IEEE
No reproduction or networking permitted without license from IHS Not for Resale

5.6.7 Suggested means of protection for various types of structures

Once a decision is made to protect the structures (based on factors in 5.6.3), the next action is to select the method of protection. The following subclauses suggest methods to aid in the design and installation of protection systems only. Provisions of most codes are taken into account, but the designer should check those codes that specifically apply.

5.6.7.1 Chimney and stacks

For lightning protection, metal stacks should be provided with a minimum of two ground conductors directly opposite on a diameter from the base of the metal stack to the ground grid.

Nonmetallic chimneys of brick and reinforced concrete should have air terminals projecting not less than 0.5 m (18 in) nor more than 0.75 m (30 in) unless provided with adequate structural support above the upper elevation of the chimney, with a recommended projection of at least 0.6 m (24 in). These air terminals should be electrically connected together by a conductor that forms a closed loop near the top of the chimney. If there is a metal crown, the terminals should be connected to it. Air terminals should be uniformly distributed around the chimney at intervals not exceeding 2.4 m (8 ft). Air terminals should be securely fastened to the top of the chimney. Chimney air terminals may not be required if there is a metal crown greater than 9.5 mm (3/8 in) thick that completely covers the top of the chimney perimeter and that is suitably bonded and grounded.

All exposed copper or bronze equipment on the upper 7.5 m (25 ft) of the chimney should have a minimum thickness of 1.6 mm (1/16 in) lead coating to resist corrosion by sulphurous products. Such parts include conductors, connectors, splices, fittings, and attachments. Exposed stainless steel or Monel metal equipment need not be lead covered.

At least two down conductors should be provided on opposite sides of the stack and should connect to the air terminal loop conductor or the metal crown at the top of the stack and to the ground system at the base of the tower. The down conductors should be interconnected by a loop conductor at the base of the stack, preferably below grade. Intermediate horizontal loop conductors should interconnect the down conductors at intervals not exceeding 67 m (200 ft). The horizontal loop conductors should be fastened to the stack at intervals not exceeding 0.6 m (2 ft). Down conductors should be fastened to the stack at intervals not exceeding 1.2 m (4 ft). On steel-reinforced concrete stacks, the reinforcing should be electrically continuous and bonded to the down conductors near the top and at the base of the stack. Intermediate bonding jumpers should be provided to bond the stack reinforcing to each down conductor at intervals not exceeding 67 m (200 ft).

Where chimneys have metal liners, ladders, or both, they should be connected to the lightning-protection system at their upper and lower ends.

The above paragraphs have addressed stacks and chimneys used primarily for combustion gases and ventilation. Where ventilating stacks emit explosive gases or dust, the terminals should project above the structure opening for at least 1.5 m (5 ft). If these explosive mixtures are emitted under forced draft, the terminals should project at least 4.6 m (15 ft) above the opening.

5.6.7.2 Metal tanks

Metal tanks are generally considered protected from lightning if joints are of welded, bolted, or riveted construction and if the thickness of the steel plate is at least 4.8 mm (3/16 in) thick in the strike area. At least two ground conductors from the base of the tank to the ground grid should be provided. Where flammable liquids are stored, the roof seams should be gastight and provide electrical continuity. Where these provisions cannot be met, the structure should be grounded for touch voltage and protected from lightning by overhead ground wires or a mast system. In all cases, tanks with nonmetallic roofs are not self-protecting and should be protected by air terminals, masts, or overhead metal ground wires. Pressure vessels should be given spe-

Copyright The Institute of Electrical and Electronics Engineers, Inc.
Provided by IHS under license with IEEE
No reproduction or networking permitted without license from IHS
Not for Resale

cial consideration regardless of thickness because of possible structural weakening resulting from a direct lightning stroke.

5.6.7.3 Buildings with structural metal framing

Buildings with structural metal framing may be protected by installing air terminals on the high points of the structure and connecting the metal frame to the ground system on the lower end. However, multiple external down conductors should be considered to provide a path for lightning that is external to the building. In cases where the structural steel serves as the main conductors of the lightning-protection system, the steel has to be electrically continuous.

5.6.7.4 Substation structures

Substation structures are generally protected from lightning by an overhead ground wire and mast system, while touch voltage protection is provided by bonding the structure and equipment to the ground mat. IEEE Std 80-1986 provides reference for grounding in the substation area.

5.6.7.5 Reactor building

Reactor buildings in nuclear generating stations should be protected by an air terminal system (see 5.6.4).

5.6.7.6 Cooling towers

Cooling towers should be equipped with an air terminal lightning-protection system. Where reinforced concrete construction is used, the metal rebar should be made electrically continuous (tie wires are adequate) and connected to the down conductors at the top and bottom of the tower. However, where precast concrete sections are used, it is often not practical to bond the rebar between precast sections.

5.6.7.7 Microwave and meteorological towers

Microwave and meteorological towers should be protected by an air terminal system. A single long air terminal or multiple short air terminals may be used, depending on the tower structure. If a single air terminal is used, all portions of the towers to be protected should lie within the zone of protection described in 5.6.5. If short air terminals are used, they should extend 0.6 m (24 in) above the protected structure and should be spaced no more than 2.4 m (8 ft) apart. For the multiple air terminal system, a minimum of two down conductors should be used. For a long single air terminal design, only one down conductor is required. The down conductors should be electrically connected to the towers at the top and bottom of the tower. Down conductors should be connected to the tower grounding system.

The tower grounding system should consist of a ground grid encircling the tower leg foundations, either individually or totally, extending approximately 1 m (touch distance) from the tower legs. The ground grid conductor should be bonded directly to each tower leg, and the surface area should be covered with crushed stone or the equivalent. Ground rods should be applied to the outer ring. Ground rods should be installed in sufficient numbers to reduce the surge impedance of the tower leg and ground conductor combination to a level that would minimize traveling wave reflections resulting from lightning strokes.

5.7 Grounding of buried structures

5.7.1 General

The purpose of this subclause is to provide guidance on the method of protecting personnel from excessive step and touch voltages caused by ground currents flowing in buried conducting materials and in earth dur-

Copyright The Institute of Electrical and Electronics Engineers, Inc.
Provided by IHS under license with IEEE
No reproduction or networking permitted without license from IHS Not for Resale

ing a fault. Additional considerations are required in the design of grounding for installations where cathodic protection systems are used.

Subsurface conducting material, such as pipe lines that may run from the generating station ground grid area to points remote from the ground grid, can allow transfer of the ground grid voltage to remote points. Grounding of buried structures in accordance with recommendations of this guide will minimize the transfer of voltage between the station ground grid and remote points.

Corrosion problems should also be addressed; see annex B.

5.7.2 Buried welded piping: gas, fuel oil, or water

Buried welded gas, water, or fuel oil lines connected to the generating station equipment should be grounded by connection to the station ground grid or grounding system or through building steel where the lines emerge from the ground. Where the welded pipeline passes outside of the ground grid area, an insulating section should be installed in the pipeline. The insulating section will separate the station ground grid voltage on the station end of the pipe from the remote earth voltage on the other end of the pipe. The insulating section should be approximately 9 m (30 ft) in length to avoid shunting by the adjacent soil. It should be recognized that insulating pipe joints may not be effective where pipes are carrying conducting fluids. It is usual to coat all buried steel pipe for protection from corrosion.

If there is a fence surrounding the generating station, the fence is grounded to the station ground grid, and the buried pipe crosses the fence, then the insulating section in the buried pipe should be installed outside the fenced area.

If the fence is remote from the station and the pipe also contains insulating joints near the station, additional insulating joints are not required if the pipeline crosses under the fence.

5.7.3 Buried cast-iron and ductile-iron piping

All buried cast-iron pipes in the generating station ground grid area should be connected to the station ground at the points where they come above ground. A copper bonding jumper should be installed across each pipe joint to make the pipe electrically continuous in cases where cathodic protection in the form of an impressed current system is used to protect the pipe or any other structure in the area. The bonding jumper should be exothermically welded to the cast-iron pipe. All copper connections to the pipe should preferably be insulated from earth to prevent galvanic corrosion of the pipe.

The cast-iron pipe should contain insulating sections, if needed, and be grounded similarly to welded steel pipe, as discussed in 5.7.2.

5.7.4 Station reinforcing steel

The following is an extract from subcause 4.2.4 of IEEE Std 142-1991:

“Concrete below ground level is a semiconducting medium of about 30 Ω-cm resistivity at 20 °C, or somewhat lower than the average earth resistivity. Consequently, in earth of average or high resistivity, the encasement of rod or wire electrodes in concrete results in lower resistance than when a similar electrode is placed directly in earth. This is due to a reduction of the resistance of the material closest to the primary electrode, in much the same manner as chemical treatment of the earth reacts near the electrode. While it is seldom justifiable to excavate or drill holes for the placement of concrete for this purpose, the widespread use of steel reinforcing bars in concrete foundations and footings provides a ready-made supply of grounding electrodes at structures utilizing this type of construction. It is only necessary to bring out an adequate electrical connection from a main reinforcing bar of each such footing for attachment to the building ground bus or structural steel.....”

Copyright The Institute of Electrical and Electronics Engineers, Inc.
Provided by IHS under license with IEEE
No reproduction or networking permitted without license from IHS
Not for Resale

"Each such footing electrode has a resistance equal to or lower than that of a driven rod of equal depth. The large number of such footings inherent to buildings will provide a net ground resistance considerably lower than that normally provided by other made electrode methods....."

Test results and design data for determining ground resistance of single and multiple concrete-encased footing electrodes are given in "The Use of Concrete-Enclosed Reinforcing Rods as Grounding Electrodes" ([B10]).

In order to use reinforcing steel as part of the ground grid, an effective metallic connection between the reinforcing steel bars and the structural steel should be established.

When reinforcing steel is connected as part of the ground grid, it should be recognized that there may be some risk of damage to structural concrete for high values of ground current.

5.7.5 Buried tanks

Buried tanks are usually coated for protection from corrosion. If the tank is in the station ground grid area where the earth surrounding the tank would approach the ground grid voltage during a fault, then the tank should be tied to the ground grid with a minimum of two ground connections. Where tanks are grounded through the piping system, these additional ground connections may not be required. In this case, the piping should be electrically continuous and connected to the ground grid.

If the buried tank is outside of the two insulating joints, as illustrated in figure 10, the tank should not be connected to the station ground grid, but an insulating section should be installed in the pipeline.

In most cases, U.S. federal and state regulations require that buried steel tanks and their piping be cathodically protected by either an impressed current or a sacrificial anode system. This applies only to the tanks that contain hazardous materials. Attention should be given with regard to grounding in the case where the tanks are electrically isolated from the grounding system because of cathodic protection requirements. It could be a safety concern if an insulation flange on piping attached to the tank is above ground.

5.7.6 Buried cables

Buried or overhead cables entering a generating station from off site, or in some cases from other isolated ground grids on the site such as in communication systems and control cables from substations, should be protected against high voltages during transmission system ground faults, lightning strokes, or switching surges. In the case of leased communication cables, a mutually agreeable method for protective equipment to be installed by either party is the generally accepted practice.

The protection of communication systems is covered in IEEE Std 487-1992. This guide should be referred to for the design of any type of communications cables entering generating stations.

Multiconductor cables for control, instrumentation, relay protection, and telemetering entering the generating station from the high-voltage substation or transformer yard generally have overall shields. In order to minimize the effect of high-energy, high-frequency transients on cables in these applications, the shield should be grounded at both ends and preferably also at intermediate points. In order to reduce the current carried by the shield, a substantial ground conductor should be provided alongside the shielded cable and should be connected to the generating station and substation ground grids. The substation and generating station ground grids should also be tied together with heavy ground conductors at a number of points in order to limit the voltage difference between the two ground grids during a ground fault in the substation. Where the voltage difference between the substation ground grid and the generating station ground grid is high, voltage stresses are imposed on the cable insulation that require careful selection of the insulation level of control cables between the substation and the generating station. Control cables with 1 kV insulation are used by many utilities for this application.

Copyright The Institute of Electrical and Electronics Engineers, Inc.
Provided by IHS under license with IEEE
No reproduction or networking permitted without license from IHS Not for Resale

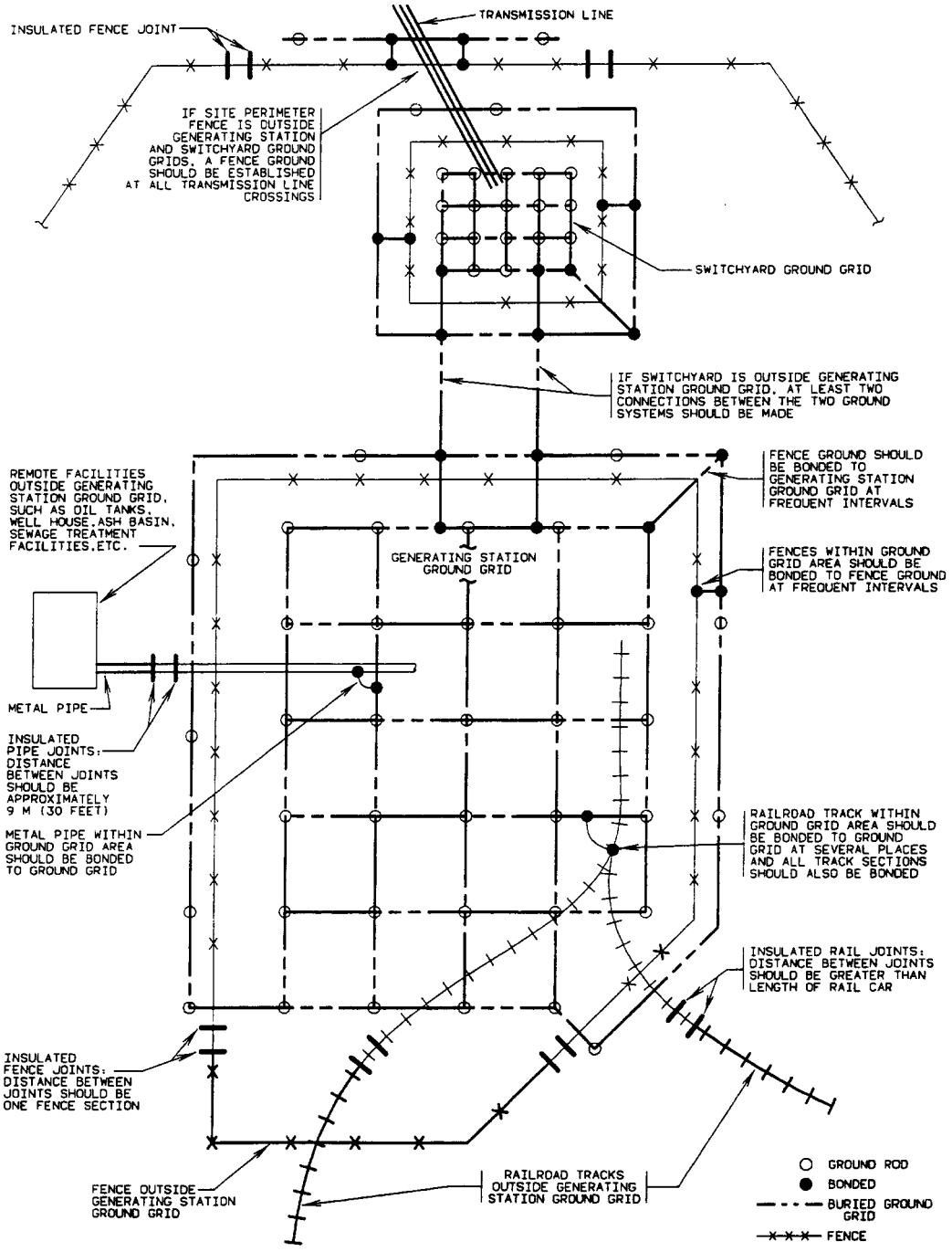

Figure 10—General arrangement and boundaries of a grounding system

Copyright The Institute of Electrical and Electronics Engineers, Inc.
Provided by IHS under license with IEEE
No reproduction or networking permitted without license from IHS
Not for Resale

In cases where there is a large separation distance between the ground grids and where there are no hard-wired control connections between the substation and generating station (such as where microwave supervisory links are used), it is not necessary to tie the ground grids together.

5.7.7 Steel pipe piles and steel "H" piles

Pipe-type steel piles may be used in a generating station. The piles can serve to provide a low ground resistance grid by connecting piles together at their uppermost ends with a bare copper conductor exothermically welded to the top of the pile. The copper bonding jumpers between the piles should be encased in concrete. If the copper bonding jumpers and connectors are buried, then they should be made watertight. This will prevent galvanic action between bare copper and the steel piles.

In some generating stations, steel "H" shapes are used as piles. They also serve as efficient ground rods below the generating station. The steel "H" shapes should be connected together in a similar manner as indicated for the pipe-type steel piles.

Another type of pile used is a thin steel shell-type with a concrete core placed after the shell is driven with a mandrel. The thin steel shell should be considered expendable. Before the pile is driven, a bare copper conductor can be brazed to the side of the steel shell near its lower end. The bare conductor should be fastened to the shell approximately every 2.5 m (8 ft) with a heavy soft steel binding wire.

After each pile is driven, the conductor ground resistance should be measured. In fine soils, the number of bare copper conductors that break away from the piles will be minimal. Satisfactorily grounded piles can be determined by measuring the ground resistance of each conductor. Those conductors with high ground resistance should be abandoned. The conductors with satisfactory resistance should be connected to form a ground grid. Since the pile shells are considered expendable, the copper ground grid could be placed in the soil to lower the ground resistance further.

When building piles are used to augment the grounding system, it is not necessary to connect each and every pile into the grounding system. Piles, like ground rods, are not used efficiently when they are close to one another. It would be satisfactory to connect those piles to the ground grid system that are separated by distances approximately equal to the length of the pile.

5.8 Sizing of grounding conductors

5.8.1 General

The selection of grounding conductors includes the selection of conductor material (5.8.2) and three steps in grounding conductor sizing, as listed below (5.8.3, 5.8.4, 5.8.5). All three steps should be performed in order to obtain a good grounding system. The steps need not be performed for each and every conductor but only for the representative and extreme cases. Material corrosion should also be considered; see annex B.

5.8.2 Grounding conductor materials

The following materials are used for grounding; some possible problem areas are also listed.

a) Bare copper is the most commonly used and recommended material. Its only problem is when used on aluminum trays or structures, where it may cause corrosion of the trays or structures in a wet environment.
b) Insulated copper is used mainly for grounding with cable conductors (see 5.5.3.2). It has less thermal capability for fault currents than the bare copper, since the insulation cannot withstand high temperatures.

Copyright The Institute of Electrical and Electronics Engineers, Inc.
Provided by IHS under license with IEEE
No reproduction or networking permitted without license from IHS Not for Resale

c) Aluminum may be used for cable trays and for grounding with aluminum cable conductors (see 5.5.3.2). It is acceptable provided that the following possible problem areas are addressed:
   1) All contacts should include an elastic feature (e.g., a conical spring washer) in order to prevent permanent deformation due to expansion.
   2) Cable conductors are usually more brittle than copper conductors and should not be used in areas that are subject to vibrations.
   3) Special protective actions should be taken where aluminum conductors are connected with copper cables or lugs, since significant corrosion may develop in a wet environment.

d) Steel is used mainly in a dual function as station structural support and also as conductor to grounding electrodes.
   1) It has much lower conductivity than copper or aluminum, which results in a higher cross-section of material being required.
   2) It should not be used outdoors or underground where it is subjected to heavy corrosion.

In applications outside of North America, steel is also used indoors as a dedicated grounding conductor.

5.8.3 Sizing for ground fault current

Any ground fault current will impose a thermal stress on the grounding conductor. This stress is related to the current magnitude and the duration of the fault and should not be able to damage the grounding conductor. Since during the very short duration of the fault the conductor does not have the time to dissipate any heat, the rules for acceptable steady currents do not apply. The limiting factor is the maximum acceptable conductor temperature.

The calculation should be done according to the recommendations of IEEE Std 80-1986 (see 9.3). For fast and approximate calculations (which may result in larger conductors than required) and also for steel structures, the following formula may be used:

$$A \cdot k = a \cdot I \cdot \sqrt{t_c} \tag{18}$$

where

A is the conductor cross-section area (in mm^2)
I is the fault current (assuming a bolted fault) (in rms A)
t_c is the fault duration, including relaying and tripping time (in s)

NOTE—In order to introduce some margin, the protection time of the backup protection should be used; if this assumption results in very large conductors, an arbitrary multiplier, say 1.5, may be used.

a is a factor that takes into account the effect of asymmetrical fault currents:

for $t_c < 0.2$ s, $a = 1.3$;
for $t_c \geq 0.2$ s, $a = 1.0$.

k is a factor dependent on the initial and final temperatures of the conductor material (see table A.1)

The value of the ground fault current as limited by the system grounding impedance/resistance should be used. (When the neutral is solidly grounded, the ground fault current may well reach 35–45 kA; by inserting a low value resistance in the neutral ground connection, this current will be limited to more manageable values.)

For systems with a ground fault alarm, the double phase-to-ground fault current should be used.

When a dual grounding arrangement (see 5.5.3.4) is used and the impedances of both current paths are known, it is possible to calculate the part of the fault current flowing through the return conductor; some

Copyright The Institute of Electrical and Electronics Engineers, Inc.
Provided by IHS under license with IEEE
No reproduction or networking permitted without license from IHS
Not for Resale

safety margin (e.g., 20%) should be added. When the impedance through the grounding electrode is not known, it may be assumed that the entire fault current flows through the conductor run to the neutral ground.

The value of the current used to calculate the conductor size should account for the possibility of future system growth. It is less costly to include a margin in the conductor size during the initial design than to try to upgrade the grounding conductors at a later date.

Since the values for k are significantly lower for steel than for copper or aluminum, larger conductors are required when using steel for grounding.

5.8.4 Sizing for ground fault protection

The protection intended to interrupt the ground fault current is actuated only when it senses a current of a certain magnitude. If a ground fault occurs anywhere in the installation, the impedance of the circuit should be low enough for the current to reach that magnitude. This calculation is required for the conductors run to the neutral ground (see 5.5.3.1 and 5.5.3.2). The requirement is met if the following condition is fulfilled:

$$Z_s = \frac{E}{I_p} \tag{19}$$

where

E is the phase-to-neutral voltage (in V)

I_p is the current required to actuate the protection (in A)[5]

Z_s is the impedance of the fault loop and source impedance (in Ω)

NOTE—The impedance includes the circuit resistance and its reactance.

In systems with solid grounding or low resistance grounding, I_p should be large enough to actuate the main fault protection (or ground fault protection, if installed). If ground fault relays are not used on individual feeders, the ground fault current should be adequate to trip the largest feeder that does not have a ground fault relay.

In systems with high impedance grounding, I_p should be large enough to actuate the dedicated ground fault protection.

When the ground fault protection only activates an alarm, the double phase-to-ground current should be large enough to activate the phase overcurrent protection. Any possible double phase-to-ground path through conduits, cable trays, or metallic frame grounding connections should have sufficiently low impedance to ensure protection operation. In a complex system, ensuring this condition is difficult; this is one of the reasons why alarmed systems are not recommended.

In arrangements with cable conductors run to the neutral ground (see 5.5.3.2), this impedance includes the phase conductor and the grounding conductor. The value of the impedance is close to the value of the resistance, albeit larger (e.g., the reactance of cables 26.24 cm (AWG #6) or larger is usually less than 0.12 Ω/km).

In arrangements with a common grounding conductor (see 5.5.3.1), the impedance is similar but the grounding conductor is made of two sections, the common and the branch conductors. This actually offers an advantage, since the common grounding conductor has a larger area, thus smaller resistance. As long as the

[5]For bus fault protection, a safety factor of (5–10) times the relay pickup is typically used.

Copyright The Institute of Electrical and Electronics Engineers, Inc.
Provided by IHS under license with IEEE
No reproduction or networking permitted without license from IHS Not for Resale

grounding conductor is kept close to the main conductors, the reactance of the circuit is close to that of cable conductors.

Where aluminum cable trays are used as the grounding conductor, the tray manufacturer will provide the tray resistance in ohms/meter and also the joint resistance in ohms/joint. It follows that both the tray length and the number of joints should be known in order to calculate the circuit resistance.

Where steel is used as a grounding conductor, the resistance may be calculated using the formula:

$$R_a = \rho_{st} \cdot \frac{1}{A}$$

where

R_a is the resistance of steel grounding conductor (in Ω)

ρ_{st} is the steel resistivity, equal to 0.11–0.15 Ω mm^2/m

l is the length of conductor (in m)

A is the conductor cross section (in mm^2)

As a result of these calculations and a decision about the type of protection to be used, it will be possible to know the time (t_c) after which the ground fault current will be interrupted.

5.8.5 Sizing for mechanical reliability

All grounding conductors should be suitable for the expected mechanical stresses, in particular where routed through traffic areas or readily accessible. Where the grounding conductors may be damaged, they should be guarded by suitable mechanical protection.

6. Bibliography

[B1] AIEE Committee Report, “Voltage Gradients Through the Ground Under Fault Conditions,” *AIEE Transactions*, pp. 669–685, 1958.

[B2] Bridges, J. E., Vainberg, M., and Willis, M. C., “Impact of Recent Developments in Biological Electrical Shock Safety Criteria,” *IEEE Transactions on Power Delivery*, vol. PWRD-2, no. 1, pp. 238–248, Jan. 1987.

[B3] Dalziel, C. F., “A Study of the Hazards of Impulse Currents,” *AIEE Transactions*, vol. 72, pt. III, pp. 1032–1041, 1953.

[B4] Dalziel, C. F., “Electric Shock Hazard,” *IEEE Spectrum*, vol. 9, no. 2, pp. 41–50, Feb. 1972.

[B5] Dawalibi, F. and Mukhedkar, D., “Optimum Design of Substation Grounding in a Two Layer Earth Structure,” *IEEE Transactions on Power Apparatus and Systems*, vol. PAS-92, no. 2, pp. 252–272, Mar./Apr. 1975.

[B6] Demers, G. and Mukhedkar, D., “Ground Grid Design,” *The Engineering Journal*, Engineering Institute of Canada, vol. 51, no. 2, pp. 36–40, Feb. 1968.

--`,,`-`-`,,`,,`,`,,`---
Copyright The Institute of Electrical and Electronics Engineers, Inc.
Provided by IHS under license with IEEE
No reproduction or networking permitted without license from IHS
Not for Resale

[B7] Desieno, C. F., Marchenko, P. O., and Vassell, G. S., "General Equations for Fault Currents in Transmission Line Ground Wires," *IEEE Transactions on Power Apparatus and Systems*, vol. PAS-89, no. 8, pp. 1891–1900, Nov./Dec. 1970.

[B8] Endrenyi, J. "Fault Current Analyses for Station Grounding Design," *Ontario Hydro Research Quarterly*, Second Quarter, 1967.

[B9] EPRI Report NSAC\41, Lightning Problems and Protection at Nuclear Power Plants, Dec. 1981.

[B10] Fagen, E. J. and Lee, R. H., "The Use of Concrete-Enclosed Reinforcing Rods as Grounding Electrodes," *IEEE Transactions on Industry and General Applications*, vol. IGA-6, no. 4, pp. 337–348, July/Aug. 1970.

[B11] Garrett, D. L., Myers, J. G., and Patel, S., "Determination of Maximum Substation Grounding System Fault Current Using Graphical Analysis," *IEEE Transactions on Power Delivery*, vol. PWRD-2, no. 3, pp. 725–732, July 1987.

[B12] Huey, R. M. and Rajaratnam, K., "Identification of Electrical Parameters in Large Earth Grids," *IEEE Transactions on Power Apparatus and Systems*, vol. PAS-93, no. 1, pp. 187–195, Jan./Feb. 1974.

[B13] Jacque, B., "Interference Induced into the Auxiliary Wiring of Power Plants and Substation During Faults," 36-01, Extrait de la Conference Internationale des Grands Reseaux Electriques, 1972.

[B14] Larsen, S. L. and Nordell, D. E., "The Measurement of Substation Ground Resistance and Its Use in Determining Protection for Metallic Communication Circuits," *IEEE Transactions on Power Apparatus and Systems*, vol. PAS-94, no. 5, pp. 1666–1673, Sept./Oct. 1975.

[B15] Pillai, P. R. and Dick, E. P., "A Review on Testing and Evaluating Substation Grounding Systems," *IEEE Transactions on Power Delivery*, vol. 7, no. 1, pp. 53–61, Jan. 1992.

[B16] Rowan, I. "Superposition in the Interpretation of Two-Layer Earth Resistivity Curves," United States Government Printing Office, Washington, D.C., 1941. (Includes "A Set of Curves to Assist in the Interpretation of the Three-Layer Resistivity Problem" by W. W. Weszel and H. V. McMurray.)

[B17] Rural Electrification Administration Specification S-6, Specifications for Grounding in Steam Generating Plants and Associated Step-up Substation, Feb. 1970.

[B18] Schwarz, S. J., "Analytical Expressions for the Resistance of Grounding Systems," *AIEE Transactions*, vol. 73, pt. III-B, pp. 1011–1016, 1954.

[B19] Sverak, J. G., "Simplified Analysis of Electrical Gradients Above a Ground Grid," *IEEE Transactions on Power Apparatus and Systems*, vol. PAS-103, no. 1, pp. 7–25, Jan. 1984.

[B20] Tagg, G. F., "Measurement of the Resistance of Physically Large Earth-Electrode Systems," *IEE Proceedings*, vol. 116, no. 3, pp. 475–479, Mar. 1969; vol. 117, no. 11, p. 2184, Nov. 1970.

[B21] Whitehead, L. E., "Ground Grid Nomogram Gives Quick Estimates of Mesh Potential," *Power Engineering*, pp. 48–49, June 1971.

[B22] Whitehead, L. E. and Whitehead, K. D., "Nomographs Aid Ground-Mat Resistance Calculations," *Transmission & Distribution*, vol. 22, no. 11, pp. 36–40, Nov. 1970.

[B23] Zipse, D. W., "Lightning Protection Systems: Advantages and Disadvantages," *IEEE Transactions on Industry Applications*, vol. 30, no. 5, pp. 1351–1361, Sept./Oct. 1994.

Copyright The Institute of Electrical and Electronics Engineers, Inc.
Provided by IHS under license with IEEE
No reproduction or networking permitted without license from IHS Not for Resale

Annex A

(informative)

Determination of the k factor

Table A.1— Values of factor k for calculating the area of grounding conductors

Initial temperature (°C)	Final temperature (°C)	Value for *k* when conductor material is		
		Copper	Aluminum	Steel
20	150	145	94	55
20	160	149	97	58
20	200	165	107	60
20	220	171	112	
20	250	180	117	70
20	300	195	126	
20	500	235	85	
40	150	131	85	
40	160	136	87	
40	200	152	99	
40	220	160	105	
40	250	170	110	
40	300	183	119	
40	500	223	145	
70	160	114	75	
75	150	105	68	
75	160	111	72	
75	200	131	85	
85	200	125	81	
85	220	133	87	
90	220	130	85	
90	250	142	93	
125	250	123	80	

From IEC 621-1: 1987. Reprinted with the permission of the International Electrotechnical Commission.

Copyright The Institute of Electrical and Electronics Engineers, Inc.
Provided by IHS under license with IEEE
No reproduction or networking permitted without license from IHS
Not for Resale

The following maximum temperatures are suggested for use:

For bare conductors, not accessible in normal operation and that are not touching heat-sensitive materials:

— 500 °C for copper and steel conductors
— 300 °C for aluminum conductors

For bare conductors, accessible in normal operation but not touching heat-sensitive materials:

— 200 °C for all conductor materials

For insulated conductors, it is recommended

a) To determine the maximum clearing time during which the conductor will be subjected to fault currents
b) To obtain from the manufacturer the maximum safe temperature for the insulation for that time

If those values are not available, it is suggested to use

— 150 °C for PVC insulation
— 220 °C for butyl rubber
— 250 °C for XLPE, ethylene-propylene rubber, and silicone rubber

Copyright The Institute of Electrical and Electronics Engineers, Inc.
Provided by IHS under license with IEEE
No reproduction or networking permitted without license from IHS Not for Resale

Annex B

(informative)

Corrosion

B.1 Corrosion

Corrosion in power plants is normally found on most steel structures and equipment that are exposed to the atmosphere, submerged in the water or other liquids, and directly buried in the ground. The degree of corrosion will vary depending on the preventative measures used to protect the structures or equipment and the corrosive properties of the environment. Corrosion, in general, can be defined as the deterioration of a substance or its properties due to the reaction with its environment. The corrosion process can be chemical, electrochemical, or physical. For metals, the dominant corrosion mechanism is an electrochemical process caused by potential differences on the metal surface or between its grain cells.

These potential differences can be caused by dissimilar metals in contact with each other, stress, electrolyte concentrations, differential aeration, etc.

"Corrosion" should be considered when designing a grounding system. The ground conductors and connectors could be affected by corrosion when they are buried or submerged in a corrosive environment.

Copper, which is the most widely used material for grounding in the United States, could cause serious dissimilar metal corrosion to steel pipes or other steel structures. If steel conductors or rods are used for grounding, as is the practice in many countries in the world, consideration should be given to protect this material from corrosion due to various corrosion mechanisms that are normally found and easily attack steel (when buried underground or submerged in an electrolyte).

Some of the most common corrosion prevention measures that are used to minimize corrosion of grounding material and or steel piping are

a) Use of tin coated bare copper cable as a grounding conductor to minimize the potential difference between the steel structures and the ground cable
b) Use of cathodic protection for steel grounding cables and/or piping
c) Use of insulated copper ground cable in areas near pipes
d) Electrical isolation of piping from other plant structures and the grounding system

   When using this method, however, the following should be considered:

   — Safety of personnel during ground fault current needs to be considered. The use of polarization cells across the insulating flanges may be required.
   — Frequent inspection of the insulating flanges should be conducted in order to insure that they are still functioning properly.
   — Cathodic protection in most cases will not be effective if the electrical isolation of offsite piping is not maintained.
   — If cathodic protection systems are used in the plant, caution and measures should be taken to avoid any stray current interference problems to structures or equipment that are electrically isolated from the structures receiving cathodic protection.

Copyright The Institute of Electrical and Electronics Engineers, Inc.
Provided by IHS under license with IEEE
No reproduction or networking permitted without license from IHS
Not for Resale

Annex C

(informative)

Division of current for small interior grids

C.1 Purpose

On a power plant site, there are only a few relatively small outdoor areas for which a ground grid needs to be designed. The ability to design these "subset" grids has been difficult because the typical conservative assumption has been that entire fault current at the station would pass through the area of the subset grid. This degree of conservatism can often result in "copper plate" requirements for the grid area. What is required is a more analytical method of determining the amount of fault current that would actually be injected into a subset grid within a larger grounding system. During the development of this guide, various methods by which this design problem had been approached were discussed. One approach utilized in the design of several stations was a uniform current distribution within the grid conductors. Another suggestion was that perhaps the fault current could be split based on a ratio of the areas. Extensive discussion resulted in the predominant opinion that the fault current could be reduced because the ground potential rise (GPR) will be essentially constant over the entire site.

The following calculations will test the hypothesis that a uniform site GPR and a reduction of fault current to design small interior grids are mutually compatible concepts, while also providing a stimulus for further discussion on this topic.

C.2 Calculation

For the purpose of illustration, a simplified example will be used to perform various calculations. A generating station site will be assumed to be a square of 100 m on a side. A complete grid covers the station with the conductors evenly spaced at 10 m intervals. The subset grid will be one square corner of the complete grid 50 m on a side, which utilizes the same conductor spacing. This is illustrated in figure C.1.

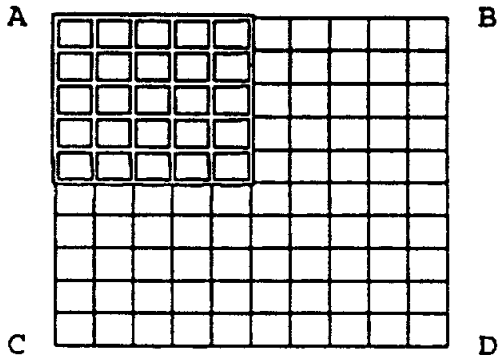

Figure C.1—Illustration of a subset grid within a complete grid

In general, GPR is calculated by the following:

$$GPR = I_g \times Z_{gt} \quad \text{(C1)}$$

Copyright The Institute of Electrical and Electronics Engineers, Inc.
Provided by IHS under license with IEEE
No reproduction or networking permitted without license from IHS Not for Resale

where

I_g is the maximum earth current (assume = 20 000 A)
Z_{gt} is the resistance of the grid to remote earth

For this example, Z_{gt} will be assumed to be composed of only the grid resistance to remote earth (Z_g) rather than a parallel combination of the grid resistance and any alternate ground paths along transmission line overhead neutral wires.

The grid resistance to remote earth can be calculated by

$$Z_g = SR \times \left(\frac{1}{L} + \frac{1}{\sqrt{20A}} \times \left(1 + \frac{1}{1 + h \times \sqrt{\frac{20}{A}}} \right) \right) \quad \text{(C2)}$$

where

A is the area of the grid (in m^2)
L is the total length of the buried horizontal conductors (in m)
h is the burial depth of the grid (in m) (assume = 0.5)
SR is the resistivity of the soil (in Ω·m) (assume = 100)

C.2.1 GPR of the complete station

Calculating the GPR for the complete station results in the following:

$SR = 100$

$L = (11 \cdot 100 \cdot 2) = 2200$

$A = 10\,000$

$h = 0.5$

$I_g = 20\,000$

This produces:

$$Z_g = 100 \times \left(\frac{1}{2200} + \frac{1}{\sqrt{20 \times 10000}} \times \left(1 + \frac{1}{1 + 0.5 \times \sqrt{\frac{20}{10000}}} \right) \right) = 0.4878\ \Omega \quad \text{(C3)}$$

$$\text{GPR} = 20000 \times 0.4878 = 9756\ \text{V}$$

This value compares well to the value of 9378 V, which was generated utilizing one of the available ground grid design software programs.

Copyright The Institute of Electrical and Electronics Engineers, Inc.
Provided by IHS under license with IEEE
No reproduction or networking permitted without license from IHS
Not for Resale

C.2.2 GPR of the subset grid assuming no fault current reduction

Calculating the GPR for the subset grid results in the following:

$SR = 100$

$L = (6 \cdot 50 \cdot 2) = 600$

$A = 2500$

$h = 0.5$

$I_g = 20\,000$

This produces

$$Z_g = 100 \times \left(\frac{1}{600} + \frac{1}{\sqrt{20 \times 2500}} \times \left(1 + \frac{1}{1 + 0.5 \times \sqrt{\frac{20}{2500}}} \right) \right) = 1.0419\ \Omega \quad \text{(C4)}$$

This is 214% of the overall station GPR.

$$\text{GPR} = 20000 \times 1.0419 = 20828\ \text{V}$$

C.2.3 GPR of the subset grid assuming fault current reduction based on a ratio of conductor lengths

This is essentially the same as the calculation in C.2.2, except that the fault current is reduced by the ratio of the total conductor length in the subset grid to the total conductor length in the overall grid. This is based on the assumption of uniform current distribution throughout the grid conductors.

Conductor ratio = 600/2200 = 0.27273

This produces:

$$\text{GPR} = 20000 \times 1.0419 \times 0.27273 = 5683\ \text{V}$$

This is 58% of the GPR of the complete grid.

C.2.4 GPR of the subset grid assuming fault current reduction based on the ratio of the areas of the two grids

Since the calculation in C.2.3 was not sufficiently accurate, test to see if a ratio of the areas produces better results, since area is often the most important variable in determining grid resistance.

Area ratio = 2500/10000 = 0.25

This produces:

$$\text{GPR} = 20000 \times 1.0419 \times 0.25 = 5209\ \text{V}$$

Copyright The Institute of Electrical and Electronics Engineers, Inc.
Provided by IHS under license with IEEE
No reproduction or networking permitted without license from IHS Not for Resale

This is 53% of the GPR of the complete grid.

C.3 Summary of results

	Complete grid	Subset grid		
		No current reduction	Reduction by conductor ratio	Reduction by area ratio
GPR (V)	9756	20838	5683	5209
% of complete grid GPR	—	214%	58%	53%

When performing calculations for a grid that is a subset of a larger grounding system, it is necessary to factor in some fault current reduction in order to avoid an overly conservative design as illustrated in the above table. Neither of the two methods originally suggested for performing this fault current reduction, however, is sufficiently accurate to maintain the assumption that the overall GPR throughout the site is equivalent. This appears to be primarily the result of the interplay of the variables of length and area in the equation for determining Z_g.

Since the GPR is uniform throughout the station, it might be more appropriate to base the fault current injected into the area of the subset grid on the criterion of keeping the GPR of the subset grid equivalent to the GPR of the overall station. This could be done as follows.

Since the GPR of the complete grid is 9756 V and the resistance of the subset grid is 1.0419 Ω, the fault current magnitude in the subset grid area would be

$$I_g = \frac{9756}{1.0419} = 9367 \text{ A}$$

This value compares well with the value of 9600 A, which was iteratively determined using one of the available ground grid design software packages.

With the appropriate fault current in the subset grid now determined, the detailed design of the subset grids can be performed utilizing the equations for step and touch voltages that require a value for fault current magnitude.

To test the accuracy of this method, two sets of calculations were performed for both the main and subset grid. One set utilized the manual design equations from IEEE Std 80-1986, which were developed in the body of this guide. Another set of calculations were performed utilizing a ground grid design software package. A comparison will be made for the step and touch voltages between the two sets of calculations. Since the step and touch voltages are the safety criteria against which the design is judged, a good correlation between the values determined for both the main grid and the subset grid will indicate the validity of the fault current reduction method based on the equal GPR criteria. The step and touch voltages will be evaluated as corner “A” of figure C.1, which is the same point for both the main and subset grids.

The following tables offer a comparison of the calculated values.

Copyright The Institute of Electrical and Electronics Engineers, Inc.
Provided by IHS under license with IEEE
No reproduction or networking permitted without license from IHS
Not for Resale

Computer calculation	Touch voltage	Step voltage
Main Grid	1723	768
Subset Grid	1976	1010

Manual calculation	Touch voltage	Step voltage
Main Grid	1766	854
Subset Grid	2231	1001

For the computerized calculations, there is good correlation between the step and touch voltages, with the values for the subset grid being slightly more conservative. Manual calculations compare well to the computerized calculations, with the more important design value of touch voltage being more conservative compared to the computerized solution.

Note that this method requires a preliminary design to be developed in order to provide values for the equations utilized. Since changes in the grounding system design will inevitably occur as the design progresses, the current division determined by utilizing the preliminary values should be compared to the current division produced by the final design to see if there is a need to perform an iterative calculation. In general, this should not be necessary unless there have been major changes in the sizes of the main grounding system and the subset grid and other conservative factors have been employed (such as the corrective projection factor).

Although this annex has not provided an exhaustive investigation into the topic, it appears that the recommended method of fault current reduction is a valid method for designing subset ground grids that are inside of a larger ground system. The manual methods that are presented in the guide permit reasonably accurate calculations to be performed that previously required the use of elaborate computer software.

Copyright The Institute of Electrical and Electronics Engineers, Inc.
Provided by IHS under license with IEEE
No reproduction or networking permitted without license from IHS
Not for Resale