IEEE
Std 656-1992

IEEE Standard for the Measurement of Audible Noise From Overhead Transmission Lines

Sponsor

Transmission and Distribution Committee
of the
IEEE Power Engineering Society

Approved September 17, 1992

IEEE Standards Board

Abstract: Uniform procedures are established for manual and automatic measurement of audible noise from overhead transmission lines. Their purpose is to allow valid evaluation and comparison of the audible noise performance of various overhead lines. Definitions are provided, and instruments are specified. Measurement procedures are set forth, and precautions are given. Supporting data that should accompany the measurement data are specified, and methods for presenting the latter are described.
Keywords: audible noise, overhead transmission lines

The Institute of Electrical and Electronics Engineers, Inc.
345 East 47th Street, New York, NY 10017-2394, USA

Copyright © 1992 by the
Institute of Electrical and Electronics Engineers, Inc.
All rights reserved. Published 1992
Printed in the United States of America

ISBN 1-55937-274-5

No part of this publication may be reproduced in any form,
in an electronic retrieval system or otherwise,
without the prior written permission of the publisher.

Copyright The Institute of Electrical and Electronics Engineers, Inc.
Provided by IHS under license with IEEE
No reproduction or networking permitted without license from IHS

Not for Resale

IEEE Standards documents are developed within the Technical Committees of the IEEE Societies and the Standards Coordinating Committees of the IEEE Standards Board. Members of the committees serve voluntarily and without compensation. They are not necessarily members of the Institute. The standards developed within IEEE represent a consensus of the broad expertise on the subject within the Institute as well as those activities outside of IEEE that have expressed an interest in participating in the development of the standard.

Use of an IEEE Standard is wholly voluntary. The existence of an IEEE Standard does not imply that there are no other ways to produce, test, measure, purchase, market, or provide other goods and services related to the scope of the IEEE Standard. Furthermore, the viewpoint expressed at the time a standard is approved and issued is subject to change brought about through developments in the state of the art and comments received from users of the standard. Every IEEE Standard is subjected to review at least every five years for revision or reaffirmation. When a document is more than five years old and has not been reaffirmed, it is reasonable to conclude that its contents, although still of some value, do not wholly reflect the present state of the art. Users are cautioned to check to determine that they have the latest edition of any IEEE Standard.

Comments for revision of IEEE Standards are welcome from any interested party, regardless of membership affiliation with IEEE. Suggestions for changes in documents should be in the form of a proposed change of text, together with appropriate supporting comments.

Interpretations: Occasionally questions may arise regarding the meaning of portions of standards as they relate to specific applications. When the need for interpretations is brought to the attention of IEEE, the Institute will initiate action to prepare appropriate responses. Since IEEE Standards represent a consensus of all concerned interests, it is important to ensure that any interpretation has also received the concurrence of a balance of interests. For this reason IEEE and the members of its technical committees are not able to provide an instant response to interpretation requests except in those cases where the matter has previously received formal consideration.

Comments on standards and requests for interpretations should be addressed to:

Secretary, IEEE Standards Board
445 Hoes Lane
P.O. Box 1331
Piscataway, NJ 08855-1331
USA

IEEE Standards documents are adopted by the Institute of Electrical and Electronics Engineers without regard to whether their adoption may involve patents on articles, materials, or processes. Such adoption does not assume any liability to any patent owner, nor does it assume any obligation whatever to parties adopting the standards documents.

Copyright The Institute of Electrical and Electronics Engineers, Inc.
Provided by IHS under license with IEEE
No reproduction or networking permitted without license from IHS
Not for Resale

Foreword

(This foreword is not a part of IEEE Std 656-1992, IEEE Standard for the Measurement of Audible Noise From Overhead Transmission Lines.)

This standard is the result of several years of effort by the Corona Effects Working Group and its predecessor, the Audible Noise Working Group, of the Corona and Field Effects Subcommittee of the Transmission and Distribution Committee of the IEEE Power Engineering Society. This standard is the direct outgrowth of a report that was prepared by a task force of the subcommittee and published as "IEEE Committee Report, Measurement of Audible Noise From Transmission Lines," *IEEE Transactions on Power Apparatus and Systems*, vol. PAS-100, no. 3, Mar. 1981, pp. 1440-1452. The report is recommended as a tutorial for this standard.

The 1992 revision of this standard incorporates minor revisions, based upon application of this standard, and a new appendix that contains the results of work by the Psychoacoustics Task Force on definitions of instrumentation for psychoacoustic testing.

At the time that this standard was approved, the Corona Effects Working Group had the following membership:

J. R. Stewart, *Chair*

G. K. Bell	W. Janischewskyj	R. G. Olsen
H. Bhai	G. B. Johnson	M. Poland
R. Carberry	N. Kolcio	A. Porrino
V. L. Chartier	V. J. Longo	W. R. Schlinger
B. Clairmont	R. C. Madge	P. Seitz
F. M. Dietrich	P. S. Maruvada	G. A. Stewart
G. Gela	T. J. McDermott	K. Tanabe
G. K. Hatanaka		F. W. Warburton
J. E. Hudson		P. S. Wong

The following persons were on the balloting committee that approved this standard for submission to the IEEE Standards Board:

J. J. Burke	G. Karady	F. D. Myers
V. L. Chartier	N. Kolcio	D. L. Nickel
G. A. Davidson	H. Lam	S. L. Nilsson
C. C. Diemond	K. E. Lindsey	R. G. Oswald
D. A. Gillies	J. H. Mallory	W. E. Reid
I. S. Grant	T. J. McDermott	M. Sforzini
J. G. Kappenman		B. R. Shperling

--`,,`-`-`,,`,,`,`,,`---

Copyright The Institute of Electrical and Electronics Engineers, Inc.
Provided by IHS under license with IEEE
No reproduction or networking permitted without license from IHS

Not for Resale

When the IEEE Standards Board approved this standard on September 17, 1992, it had the following membership:

Marco W. Migliaro, *Chair* **Donald C. Loughry**, *Vice Chair*
Andrew G. Salem, *Secretary*

Dennis Bodson
Paul L. Borrill
Clyde Camp
Donald C. Fleckenstein
Jay Forster*
David F. Franklin
Ramiro Garcia
Thomas L. Hannan
Donald N. Heirman
Ben C. Johnson
Walter J. Karplus
Ivor N. Knight
Joseph Koepfinger*
Irving Kolodny
D. N. "Jim" Logothetis
Lawrence V. McCall
T. Don Michael*
John L. Rankine
Wallace S. Read
Ronald H. Reimer
Gary S. Robinson
Martin V. Schneider
Terrance R. Whittemore
Donald W. Zipse

*Member Emeritus

Also included are the following nonvoting IEEE Standards Board liaisons:

Satish K. Aggarwal
James Beall
Richard B. Engelman
David E. Soffrin
Stanley Warshaw

Adam Sicker
IEEE Standards Project Editor

Copyright The Institute of Electrical and Electronics Engineers, Inc.
Provided by IHS under license with IEEE
No reproduction or networking permitted without license from IHS
Not for Resale

Contents

SECTION PAGE

1. Purpose and Scope 7

2. References 7

3. Definitions 8

4. Instruments 9
   - 4.1 Sound-Level Meters 9
   - 4.2 Microphones 10
   - 4.3 Microphone Protective Devices 10
   - 4.4 Frequency Analyzers 10
   - 4.5 Recorders 10
   - 4.6 Community-Noise Analyzers 10

5. Measurement Procedures 10
   - 5.1 Short-Term Manual Surveys 11
   - 5.2 Long-Term Automatic Surveys 14

6. Measurement Precautions 14
   - 6.1 Weather Protection of System 14
   - 6.2 Ambient-Noise Intrusions 15
   - 6.3 Alternating Electric and Magnetic Fields 15
   - 6.4 Measurements Near DC Transmission Lines 15

7. Supporting Data 15
   - 7.1 General Information 15
   - 7.2 Meteorological Information 16
   - 7.3 Short-Term Manual Measurements 16
   - 7.4 Long-Term Automatic Measurements 16

8. Data Presentation 16
   - 8.1 Short-Term Manual Measurement Data 16
   - 8.2 Long-Term Measurment Data 16

FIGURES

Fig 1 Free-Field Microphone Orientation 11
Fig 2 Pressure Microphone Orientation 11
Fig 3 Random-Incidence Microphone Orientation 12
Fig 4 Form A — Audible Noise Data Sheet 17
Fig 5 Example of Frequency Spectrum of AC Transmission-Line Audible Noise in Rain 18
Fig 6 Example of Audible-Noise Lateral Profile 18
Fig 7 Example of Cumulative Distribution Curves of Transmission-Line Noise Data 19
Fig 8 Example of Plots of Frequncy-Spectrum Exceedance Levels of Transmission-Line Noise 20

--`,,`-`-`,,`,,`,`,,`---
Copyright The Institute of Electrical and Electronics Engineers, Inc.
Provided by IHS under license with IEEE
No reproduction or networking permitted without license from IHS Not for Resale

APPENDIXES PAGE

Appendix A Recording Requirements — Transmission-Line Audible-Noise Sounds 21
A1. Introduction 21
A2. Minimum Requirements 21
A3. System Performance Requirements 22
A4. Operational Requirements 23

Copyright The Institute of Electrical and Electronics Engineers, Inc.
Provided by IHS under license with IEEE
No reproduction or networking permitted without license from IHS
Not for Resale

IEEE Standard for the Measurement of Audible Noise From Overhead Transmission Lines

1. Purpose and Scope

1.1 Purpose. The purpose of this standard is to establish uniform procedures for the measurement of audible noise from overhead transmission lines, using instrumentation that conforms to ANSI S1.4-1983 [1][1], ANSI S1.6-1984 [2], ANSI/SAE J184-1987 [4], IEC 651 (1979) [5], and IEEE Std 539-1990 [7]. A uniform procedure is a prerequisite to valid evaluation and comparisons of the audible-noise performance of various overhead power transmission lines.

1.2 Scope. This standard covers manual and automatic audible-noise measurements from overhead power transmission lines.

2. References

[1] ANSI S1.4-1983, American National Standard Specification for Sound Level Meters.[2]

[2] ANSI S1.6-1984 (Reaff 1990), American National Standard Preferred Frequencies, Frequency Levels, and Band Numbers for Acoustical Measurements.

[3] ANSI S1.11-1986, American National Standard Specifications for Octave-Band and Fractional Octave-Band Analog and Digital Filters.

[4] ANSI/SAE J184-1987, Qualifying a Sound Data Acquisition System.

[5] IEC 651 (1979), Sound level meters.[3]

[6] IEEE Std 100-1990, The New IEEE Standard Dictionary of Electrical and Electronics Terms.[4]

[7] IEEE Std 539-1990, IEEE Standard Definitions of Terms Relating to Corona and Field Effects of Overhead Power Lines (ANSI).

[1]The numbers in brackets correspond to those of the references in Section 2.

[2]ANSI publications are available from the Sales Department, American National Standards Institute, 11 West 42nd Street, 13th Floor, New York, NY 10036, USA.

[3]IEC publications are available from the IEC Sales Department, Case Postale 131, 3 rue de Varembé, CH 1211, Genève 20, Switzerland, Suisse. IEC publications are also available in the United States from the Sales Department, American National Standards Institute, 11 West 42nd Street, 13th Floor, New York, NY 10036, USA.

[4]IEEE publications are available from the Institute of Electrical and Electronics Engineers, Service Center, 445 Hoes Lane, P.O. Box 1331, Piscataway, NJ 08855-1331, USA.

Copyright The Institute of Electrical and Electronics Engineers, Inc.
Provided by IHS under license with IEEE
No reproduction or networking permitted without license from IHS
Not for Resale

3. Definitions

The following definitions are used in this standard. For additional definitions, see IEEE Std 100-1990 [6] and IEEE Std 539-1990 [7].

day-night sound level (L_{dn}). The L_{dn} rating is the average A-weighted sound level, in decibels, integrated over a 24 h period. A 10 db(A) penalty is applied to all sound occuring between 10 P.M. and 7 A.M.

NOTES: (1) L_{dn} is intended to improve upon the L_{eq} rating by adding a correction for nighttime noise intrusions because people are more sensitive to such intrusions.
(2) The L_{dn} can be derived from daytime and nighttime L_{eq} values as follows:

$$L_{dn} = 10\log\left(\frac{1}{24}\right)\left[15\ \text{antilog}\frac{L_d}{10} + 9\ \text{antilog}\frac{L_d + 10}{10}\right]$$

where

L_d = The L_{eq} for the 15 daytime hours
L_n = The L_{eq} for the 9 nighttime hours

(3) The purpose of L_{dn} is to provide a single-number measure of time-carrying noise for a specific time period (24 h).

energy-equivalent sound level (L_{eq}). The average of the sound energy level (usually A-weighted) of a varying sound over a specified period of time.

NOTES: (1) The simplest and most popular method for rating intermittent or fluctuating noise intrusions is to rely upon some measure of the average sound-level magnitude over time. The most common such average is the equivalent sound level, L_{eq}, expressed in decibels.
(2) The term "equivalent" signifies that a steady sound having the same level as the L_{eq} would have the same sound energy as the fluctuating sound. The term "energy" is used because the sound amplitude is averaged on an rms-pressure-squared basis, and the square of the pressure is proportional to energy. For example, two sounds, one of which contains 24 times as much energy as the other but lasts for 1 h instead of 24 h, would have the same energy-equivalent sound level.
(3) Mathematically, the equivalent sound level is defined as

$$L_{eq} = 10\log\left[\frac{1}{(t_2 - t_1)}\int_{t_1}^{t_2}\frac{p^2(t)}{p^2_{ref}}dt\right]$$

where

$p(t)$ = The time-varying A-weighted sound level, in μPa
p_{ref} = The reference pressure, 20 μPa
$(t_2 - t_1)$ = The time period of interest

If the cumulative probability distribution of a noise is known, then L_{eq} can be estimated by

$$L_{eq} = 10\log\left[\frac{1}{100}\sum_{0}^{n}(P_x - P_{x-1})\ \text{antilog}\frac{L_x}{10}\right]$$

where

P_x, P_{x-1} = Selected adjacent steps along the probability scale, expressed in percent (%)
L_x = The highest noise level in each step
x = The step number
n = The total number of steps

free-field microphone. A microphone that has been designed to have a flat frequency response to sound waves arriving with perpendicular incidence (i.e., straight at the microphone).

frequency spectrum. The distribution of the amplitude (and sometimes the phase) of the frequency components of a signal, as a function of frequency.

Copyright The Institute of Electrical and Electronics Engineers, Inc.
Provided by IHS under license with IEEE
No reproduction or networking permitted without license from IHS
Not for Resale

insertion loss. The difference, in decibels, between the sound pressure level of a component (e.g., windscreen) measured before the insertion of the component and the sound pressure level measured after the insertion of the component (provided that the source of the noise remains unchanged).

octave band, one-third octave band. The integrated sound pressure level of all components in a frequency band corresponding to a specified octave.

NOTE: The location of an octave band pressure level on a frequency scale, f_o, is usually specified as the geometric mean of the upper and lower frequencies of the octave. The lower frequency of the octave band is $f_o/\sqrt{2}$ and the upper frequency is $(\sqrt{2})f_o$. A third-octave band extends from a lower frequency $f_o/\sqrt[6]{2}$ to an upper frequency of $(\sqrt[6]{2})f_o$.

random-incidence microphone. A microphone that has been designed to have a flat frequency response in a diffuse sound field in which sound waves are arriving equally from all directions.

statistical descriptors (exceedance levels, *L*-levels). Many sounds have sound-pressure levels that are not constant in time and cannot, without qualification, be adequately characterized by a single value of sound level. One method for dealing with fluctuating or intermittent sounds is to examine the sound level statistically as a function of time.

Statistical descriptors are often applied to A-weighted sound levels. They are called exceedance levels or *L*-levels. For example, the L_{10} is the A-weighted sound level exceeded for 10% of the time over a specified time period. The other 90% of the time, the sound level is less than the L_{10}. Similarly, the L_{50} is the sound level exceeded 50% of the time; the L_{90} is the sound level exceeded 90% of the time; etc.

weighted sound level. A-weighted sound-pressure level, obtained by the use of metering characteristics and the weightings A, B, C, or D specified in ANSI S1.4-1983 [1]. The weightings employed must always be stated. The reference pressure is always 20 µPa.

NOTES: (1) The meter reading (in decibels) corresponds to a value of the sound pressure integrated over the audible frequency range with a specified frequency weighting and integration time.

(2) A suitable method of stating the weighting is, for example, “The A-weighted sound level was 43 dB,” or “The sound level was 490 dB (A).”

(3) Weightings are based on psychoacoustically determined time or frequency responses in objective measuring equipment. This is done to obtain data that better predict the subjective listener reaction than would wide-band measurements with a meter having either an instantaneous time response or a slow average or rms response. Standard weighting characteristics indicating relative response as a function of frequency are designated A, B, C, and D.

4. Instruments

A sound-measurement system consists of a sound transducer, an amplifier, filters, a detector, and an indicating device. Such systems may be manually operated for short-term measurements or designed to automatically record repeated measurements on a long-term basis.

4.1 Sound-Level Meters. The basic sound-measurement system is the sound-level meter. The standard sound-level meter contains a microphone, weighting networks, an rms detector, and a sensitive voltmeter or digital display that shows the weighted electrical signal from the microphone. It may also have various response times. The sound-level meter is calibrated to a standard reference sound-pressure level of 20 µPa.

The characteristics of sound-level meters are covered by several current standards. For transmission-line noise measurements, a precision sound-level meter, as specified by ANSI S1.4-1983 [1], shall be used.

Copyright The Institute of Electrical and Electronics Engineers, Inc.
Provided by IHS under license with IEEE
No reproduction or networking permitted without license from IHS
Not for Resale

4.2 Microphones. Of the various types of microphones available, ceramic, electret, or air-condenser microphones, suitably protected for outdoor use, are recommended for transmission-line audible-noise measurements. They shall have a frequency response from 20 Hz to 15 kHz ±3 dB, and shall be capable of measuring sound levels down to 30 dB(A). Microphones with a diameter of 1.25 cm (0.5 in) are preferred for all measurements. However, where the sensitivity of the 1.25 cm (0.5 in) microphone is not sufficient, a 2.5 cm (1 in) microphone may be used. For measurements at distances less than 15 m (50 ft) laterally from the nearest conductor, or for frequency spectrum measurements above 12 kHz, 1.25 cm (0.5 in) microphones are recommended.

Whenever microphones are separated from the sound-level meter by cables that would affect the frequency response of the measurement system, a microphone preamplifier or equivalent shall be used.

4.3 Microphone Protective Devices. To minimize wind-generated noise, a windscreen shall be placed over the microphone. A windscreen will also afford a certain degree of protection from rain. The insertion loss of the windscreen shall not exceed ±2 dB over the frequency range of the microphone. For short-term measurements in light rain, no additional weather protection is necessary. For long-term unattended operation of any type of microphone, an all-weather protection system shall be used. The effect of the protection system on the directivity pattern of the microphone, on its frequency response, and on the local noise level shall be evaluated and recorded.

4.4 Frequency Analyzers. When a frequency analysis is performed, data shall be obtained from 31.5 Hz to 8 kHz, inclusive, and extending to 16 kHz if system response permits, with instrumentation conforming to ANSI S1.11-1986 [3], and in frequency bands conforming to ANSI S1.6-1984 [2]. For all but the pure tone components of ac transmission-line audible noise, octave-band measurements give sufficient detail of the frequency spectrum and are recommended. For pure tones, measurements shall be made with one-third octave band or narrower bandwidth filters.

4.5 Recorders. Chart recorders and magnetic tape recorders can be used for the short-term and the long-term monitoring of audible noise. If chart recorders are used, chart span and speed shall be sufficient to display the full range of levels of interest.

When a magnetic tape recorder is used to record sounds for later analysis, it shall have a response that is flat within ±3 dB over the frequency range from 20 Hz to 15 kHz. For a frequency spectrum analysis, both the recorder and the spectrum-analyzer instrumentation shall have a response that is flat within ±1 dB over the frequency range of interest. The electronic noise level of the recorder shall be at least 10 dB below the lowest acoustical signal level in each frequency band to be analyzed.

4.6 Community-Noise Analyzers. Community-noise analyzers digitally process the output of a sound-level meter (which may be built into the analyzer) in order to determine L-levels, L_{eq}, L_{dn}, or other noise measures over a prescribed period of time. Such instruments can operate unattended for periods of several days, sampling, storing, or analyzing the sound level. With suitable precautions, such analyzers may be used for transmission-line audible-noise measurements in conformance with ANSI/SAE J184-1987 [4].

5. Measurement Procedures

The audible-noise properties of the line are described by the frequency spectrum of the noise at defined locations, and by the variation of the level of noise with time and meteorological conditions at these locations. The audible-noise properties can be studied on a short-term or a long-term basis. To obtain a good statistical measure of the variability of the noise, it is

Copyright The Institute of Electrical and Electronics Engineers, Inc.
Provided by IHS under license with IEEE
No reproduction or networking permitted without license from IHS
Not for Resale

generally necessary to resort to some form of long-term automatic recording system. Long-term automatic recording of noise levels and associated meteorological data requires more sophisticated instrumentation and elaborate techniques.

5.1 Short-Term Manual Surveys. Short-term measurements are useful for locating problem areas and for attended surveys under specific conditions.

5.1.1 Microphone Location. The recommended location for the microphone is 1.5 m (5 ft) above ground and 15 m (50 ft) measured horizontally from an outside phase conductor of an ac transmission line or from the positive pole of a dc transmission line, in a direction perpendicular to the line, at midspan. The location shall be chosen to be representative of the general locality, or to obtain information applicable to a specific problem. Discrete frequency components (pure tones), particularly the 100 Hz or 120 Hz *hum* of ac line noise, can vary as much as 20 dB for small lateral displacements of microphone position. Maximum and minimum values shall be reported together with statements concerning their position relative to the standard microphone location. These locations will change with weather conditions. Where possible, locations should be chosen where the surrounding terrain is reasonably flat and free of large obstacles or vertical reflecting surfaces.

To obtain a lateral profile, noise measurements are taken at several distances perpendicular to a line. Recommended locations are at the centerline; between the centerline and an outside phase (positive pole for the case of a dc line); under the outside phase (positive pole for the case of a dc line); and 15 m (50 ft), 30 m (100 ft), 45 m (150 ft), and 60 m (200 ft) measured horizontally from the outside phase (positive pole) at mid-span. For all measurements, the microphone shall be positioned 1.5 m (5 ft) above ground.

A level area between line-support structures of essentially equal elevation should be selected for the measurements. If such an area is not readily available, measurements may be made on a span along which the ground slopes uniformly from one structure to the other, with the recommended measurement locations being perpendicular to the line at the point of minimum conductor-to-ground clearance. Where possible, locations should be chosen where the surrounding terrain is reasonably flat and free of large obstacles or vertical reflecting surfaces.

Under certain circumstances, such as complaint investigations or regulatory-compliance checks, it may be necessary to make noise measurements at other than the recommended locations. Reporting of noise measurements shall include sufficient information to describe the microphone location and surrounding environment relative to the line.

5.1.2 Microphone Orientation. The orientation of the microphone that will provide a response that is closest to that of an ideal microphone in the sound field produced by a transmission line will depend upon the type of microphone and the relative positions of each phase of the line. Experience has shown that little loss in accuracy occurs if the microphones are oriented as follows:

(1) A free-field microphone shall be directed at the nearest point on the center phase conductor of an ac line, or at the nearest point on the positive pole of a dc line, as shown in Fig 1.
(2) A pressure microphone shall be oriented with its axis in a plane perpendicular to the imaginary line from the microphone to the center phase (or positive pole) and in a plane parallel to the line, as shown in Fig 2.
(3) A random-incidence microphone shall be oriented vertically as shown in Fig 3.

The use of a random-incidence microphone is preferred because its vertical orientation facilitates protection of the microphone from the weather.

Copyright The Institute of Electrical and Electronics Engineers, Inc.
Provided by IHS under license with IEEE
No reproduction or networking permitted without license from IHS
Not for Resale

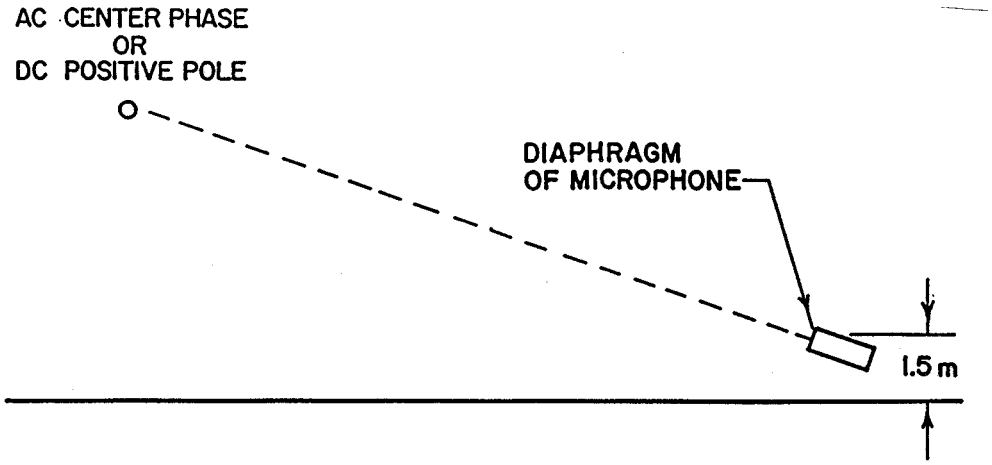

Fig 1
Free-Field Microphone Orientation

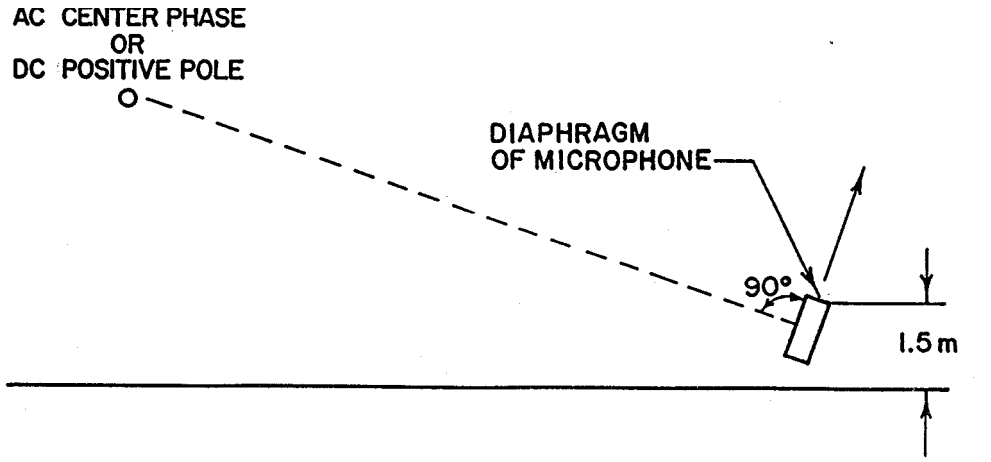

Fig 2
Pressure Microphone Orientation

Copyright The Institute of Electrical and Electronics Engineers, Inc.
Provided by IHS under license with IEEE
No reproduction or networking permitted without license from IHS
Not for Resale

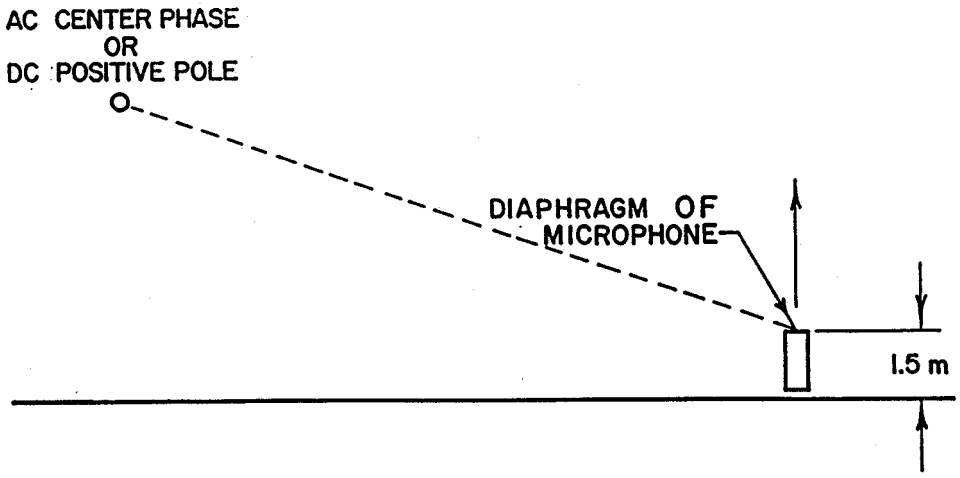

Fig 3
Random-Incidence Microphone Orientation

5.1.3 Position of Operator With Respect to Microphone. The microphone shall be separated from the sound-level meter and operator by at least 3 m (10 ft). If a microphone/meter combination must be hand-held at the measurement location, the operator shall hold the microphone with an outstretched arm. In either case, the operator shall not place himself or herself between the microphone and the transmission line, nor on the far side of the microphone from the line.

5.1.4 Recommended Measurements. For each measurement location, the minimum data that shall be recorded are the A-weighted sound level and the unweighted levels in the 125 Hz, 1000 Hz, and 8000 Hz octave bands. If weather conditions are stable, additional measurements, such as a full complement of octave-band levels, may be taken for a more complete characterization of the noise. Alternatively, a short tape recording may be made for later spectral analysis.

In checking for compliance with specific regulations that limit pure tones, measurements shall be made according to the requirements of the particular regulation. This may involve one-third or even one-tenth octave bands.

Noise measurements shall be taken under a variety of weather conditions. For ac transmission-line noise, measurements taken under foul-weather conditions normally give higher noise levels than those taken during fair-weather conditions; and measurements should be taken at least under conditions of drizzle and light rain. If possible, it is desirable to take measurements during periods of different rain intensity and also during periods of fog and snow.

For dc transmission-line noise, fair-weather conditions give higher noise levels than foul-weather conditions. Measurements of dc line noise shall be taken on several different occasions to cover as wide a range of humidity conditions as possible.

It is essential to measure transmission-line noise without interference from local ambient noise. Typical ambient noise sources include vehicular traffic, wind, and heavy rainfall. At certain periods of the year or day, insect, bird, or frog ambient noise may be present. Using the human ear (aided, if necessary, by headphones connected to the sound-level meter output) and taking a critical look at the measured frequency spectrum for abnormalities are the primary means of judging when the measured levels represent transmission-line audible noise rather than a combination of line and local ambient noises.

Copyright The Institute of Electrical and Electronics Engineers, Inc.
Provided by IHS under license with IEEE
No reproduction or networking permitted without license from IHS
Not for Resale

The minimum meteorological information to be recorded during short-term manual measurements shall consist of precipitation rate and windspeed, supplemented with qualitative observations by the personnel conducting the measurements. For dc transmission-line noise measurements, relative humidity also shall be recorded. Where the conductor surface has been modified by collected dust, salt deposits, icing, or hoarfrost, the conductor surface condition shall be described.

5.1.5 Calibration of Instruments. The measuring system shall be calibrated with a portable acoustical calibrating device prior to and immediately after each series of measurements. Any change in calibration greater than ±0.5 dB during the measurement period shall be reported along with the noise measurements.

5.2 Long-Term Automatic Measurements. Long-term measurements are useful for characterizing the audible-noise statistics at a given location under a variety of conditions and for checking regulatory compliance.

5.2.1 Microphone Location and Orientation. The microphone shall be located and oriented as specified in 5.1.1 and 5.1.2. If a weather shelter is used, its effect on the sound field shall be measured and reported.

5.2.2 Recommended Measurements. For measurements of ac transmission-line noise, the minimum data that shall be reported are the A-weighted sound level, precipitation rate, windspeed, temperature, and relative humidity. It is also desirable to include audio recordings of the 8 kHz (or 16 kHz if sufficient recorder frequency response is available) octave-band sound-pressure level because this can aid in determining when the measured noise should be attributable to the line rather than to ambient noise. Radio interference (RI) measurements as well as the use of an additional remote microphone (60 m from outside phase) are also useful for this purpose.

If possible, all octave-band sound-pressure levels from 31.5 Hz to 16 kHz should be measured.

For audible noise from dc transmission lines, minimum requirements are those for ac lines, except that a high-frequency octave-band, 8 kHz or 16 kHz, shall be included. As is the case for ac noise, it is desirable to record all octave-band sound-pressure levels from 31.5 Hz to 16 kHz.

Data shall be collected over a sufficiently long period of time to encompass a wide variety of weather conditions. Typically, a period of several months is required, and a period of 1 year is recommended.

5.2.3 Calibration of Instruments. The instrumentation shall be calibrated periodically and checked for proper functioning. The interval between such checks will depend on known instrument stability; however, checks with an acoustic calibrator shall be performed at least once every two weeks. At least once every two months, the frequency response and internal noise of the electrical system shall be measured using a dummy microphone and a pure-tone signal generator or confirmed using a white or pink noise source.

Windscreens and weather protectors shall be inspected at each site visit. Their condition should be noted, and they shall be replaced if their performance is altered. A spare microphone and preamplifier should be available. Microphones should be exchanged at six month intervals for laboratory calibration.

6. Measurement Precautions

6.1 Weather Protection of System. When an all-weather measurement system is used, occasional inspection shall be done to check the condition of moisture protection elements. For

Copyright The Institute of Electrical and Electronics Engineers, Inc.
Provided by IHS under license with IEEE
No reproduction or networking permitted without license from IHS
Not for Resale

short-term measurements, a polyurethane windscreen for the microphone may afford sufficient protection from rain; but it should be squeezed out periodically or replaced with a dry windscreen. The measuring instrumentation shall have adequate protection from precipitation or condensation. For long-term measurements, adequate protection from all weather conditions and from animal or bird intrusions shall be provided for the entire system.

6.2 Ambient-Noise Intrusions. Care shall be exercised in the choice of a measuring location to avoid, as much as possible, disturbances from ambient noises. This is particularly important for long-term automatic operation. The measurement location should be sufficiently far from major sources of noise (highways, airports, industrial areas, etc.) that the ambient noise generally is at least 10 dB below the transmission-line noise to be measured. Locations shall be avoided at which wind-rustled foliage or grass or the splashing of rain drops could create significant levels of noise. Personnel making manual measurements often can detect aurally any ambient noises intruding on the transmission-line noise, and should not make measurements during these periods.

Very-low-frequency noise produced by wind passing over the microphone, even when a windscreen is used, can be significant and difficult to detect. Tests in the presence of high winds but in the absence of other noise sources can be undertaken to determine the contribution of such wind-produced noise. In the absence of this type of information, measurements shall not be taken or shall be disregarded if the wind speed exceeds 5 m/s (11 mi/h).

6.3 Alternating Electric and Magnetic Fields. Microphones, connecting cables, and associated instruments need to be electrically shielded when used near ac transmission lines in order to avoid errors due to coupling from 50 Hz or 60 Hz fields. The inherent electronic noise level of the system measured in place using a dummy microphone shall be used to verify the absence of such coupling to the system. Care shall be taken that protrusions near the microphone, such as anti-bird spikes, weather shelters, or wire cages used for electric field shielding, do not produce localized sources of corona and, thus, provide nearby noise sources.

6.4 Measurements Near DC Transmission Lines. In the presence of low humidity, certain insulating elements of the microphone system, such as a polyurethane windscreen, may have a large surface resistance. Ions resulting from corona on a dc line can deposit on these surfaces, thereby building up voltages that may be sufficient to result in small sparks between grounded and insulating surfaces, or even between different regions of the insulating surfaces. Grounded enclosing grids can be used to prevent this, but the surest remedy is to make such surfaces conductive by applying a thin semiconductive coating. Such coatings are commercially-available in the form of sprays for eliminating static from clothing. (These sprays shall not affect electrical connectors.)

7. Supporting Data

7.1 General Information. Certain information relating to the transmission-line noise measuring location and the measuring instruments shall be given whenever transmission-line audible-noise data are reported. The specific measurement location, the line geometry, and the construction of the closest supporting structures shall be described, preferably by means of a dimensioned sketch. The description shall include the number, diameter, and spacing of conductors in each phase (or pole) bundle; the location of each bundle with respect to a specified reference point (for example, a point on the ground at the center of the line); the diameters and locations of shield wires; the line voltage and, if possible, the line current when the noise measurements were made; and the line-voltage phasing. Comments on altitude, ground contour, and environmental factors such as ground cover and noise absorbing, reflecting, or generating features shall be recorded.

Copyright The Institute of Electrical and Electronics Engineers, Inc.
Provided by IHS under license with IEEE
No reproduction or networking permitted without license from IHS
Not for Resale

The measurement system shall be described by stating the type, manufacturer, and model number of the system (or its component parts if assembled from a number of separate instruments). The microphone type (free-field, pressure, random-incidence, etc.) and its orientation shall be specified. A description of any form of microphone protection (weather shields, windscreens, shelters, etc.) shall be included. If any noncommercially available device is used, it shall be fully described with respect to its function, mode of operation, and compliance with relevant standards. Each set of data shall show all instrument settings, the date and time period when the data were obtained, and the name of the person who made the measurements.

7.2 Meteorological Information. Meteorological information is needed, first, to correlate transmission-line effects with audible-noise level and, second, to evaluate other possible effects on the sound-measuring system. Observations such as *light rain*, *hazy sky*, *gusty winds*, *fog*, and *cold* are useful, but it is preferable to quantify weather conditions with actual measurements of precipitation rate, wind velocity and direction, temperature, and humidity.

7.3 Short-Term Manual Measurements. The information required under 7.1 and 7.2 shall be accompanied by qualitative observations made by the measuring personnel where appropriate. These might include, for example, an interpretation of the sound of the noise (crackling, frying, humming, etc.), any unusual conductor-surface condition, or conductor vibration. If the reported data represent the average of a number of measurements, then the number of measurements, the time interval, and the range of the sound levels shall be given. A sample data sheet is shown in Fig 4.

7.4 Long-Term Automatic Measurements. The information required under 7.1 shall be obtained. In addition, the measured data shall be separated according to weather condition (for example, rain, fog, snow, fair weather, and, for noise from dc lines, relative humidity). The means of categorizing the weather conditions shall be described. The total period of measurement, including the time of year, shall be specified together with any auxiliary information that might be appropriate. The data should be analyzed statistically.

8. Data Presentation

Data shall be described fully and presented in a complete and consistent form to allow comparison and shall include the applicable supporting data from Section 7.

8.1 Short-Term Manual Measurement Data. As a minimum, data collected from short-term manual measurements shall be reported at least in terms of A-weighted sound levels and frequency spectra measured, along with complete supporting data. Sample frequency spectra and lateral profiles are shown in Figs 5 and 6.

8.2 Long-Term Measurement Data. Statistical data from long-term measurements shall be reported in a graphic form. This shall consist of cumulative amplitude-distribution curves of, at least, A-weighted sound level and octave-band sound-pressure level for each category of weather conditions, along with complete supporting data. Examples of cumulative amplitude distributions for A-weighted and for 8 kHz octave-band data are shown in Fig 7. An example of plots of frequency spectrum exceedance levels of transmission-line noise is shown in Fig 8.

Copyright The Institute of Electrical and Electronics Engineers, Inc.
Provided by IHS under license with IEEE
No reproduction or networking permitted without license from IHS
Not for Resale

Copyright The Institute of Electrical and Electronics Engineers, Inc.
Provided by IHS under license with IEEE
No reproduction or networking permitted without license from IHS

Line Identification _____ Microphone (Make and Model) _____ Date _____ Recorder◇_____

Line Location*_____ Microphone Height°_____ Sheet Number _____ Line Height□_____

Instrument (Make and Model)y_____ Line Voltage at Time of Test _____ kV Wind Cover (Make and Model) _____ Rain Cover♦_____

Altitude _____ m (or ft) MSL Sound Level Calibrator _____

Lateral Distance X	Weather					Conductor				Time Start	SPL - dB Above 20 μPa												Time Finish	RI• dB (1μV/m)	
				Wind		Cond Condit	Sound Descr		Movement		Weighting		Octave Band Analysis - CF in Hz												dB	Freq
	W	T	H	V	D	S	LS	R	Disp & Freq		A	Lin	31.5	63	125	250	500	1k	2k	4k	8k	16k	Lin			
Ambient▲																										

Weather Conditions (W)

1.0 Fog
1.1 Light
1.2 Medium
1.3 Heavy
2.0 Rain
2.1 Light
2.2 Medium
2.3 Heavy
2.4 Drizzle
3.0 Snow
3.1 Light
3.2 Medium
3.3 Heavy
3.4 Flurries
4.0 Fair (Dry Conductors)

Temperature (T) - C (or F)
Relative Humidity (H) - %
Wind Velocity (V) - m/s (or mi/h)
Wind Direction (D) - Angle Normal to Line

Conductor Surface Conditions (S)

5.1 Dry
5.2 Wet
5.3 Ice Glaze
5.4 Snow
5.5 Sleet

Description of Line Sound (LS) (A-Steady, B-Occasional)

6.1 Crackling or Bacon Frying
6.2 Low Frequency Sound
6.3 High Frequency Sound
6.4 Modulated Sound (Varying in Amplitude)
6.5 Other (Describe)

Noise Rating (R)

7.1 Of No Concern
7.2 Acceptable
7.3 Barely Acceptable
7.4 Unacceptable
7.5 Intolerable

(Observer's Interpretation)

Conductor Movement

Corona Vibration
8.1 Center Phase Only
8.2 All 3 Phases (Describe Displacement (Meter) and Frequency (Hz)
9.1 Aeolian Mech Vibration (Due to 5-15 mph Wind)
10.1 Galloping Movement
Low Frequency, High Amplitude (Describe Displacement and Frequency)

Notes:
* Sufficient to relocate measurement position later, specify units used
◇ Name, not initials
□ Lowest phase at measuring location - m(or ft)
° Microphone height above ground - m(or ft) Note HH for hand held or TM for tripod mounted Microphone to be oriented as indicated in Sec 4.1.2
♦ Describe, if used
X Lateral distance from outermost phase - m(or ft)
▲ Ambient (dBA) to be measured far enough away from the line so that the line noise cannot be heard, specify distance
• Radio noise at or near 1 MHz 50 ft laterally from outermost phase dB above 1 μV/m or 0.5 MHz (specify)
y Record all switch settings

Fig 4 — Form A

Not for Resale

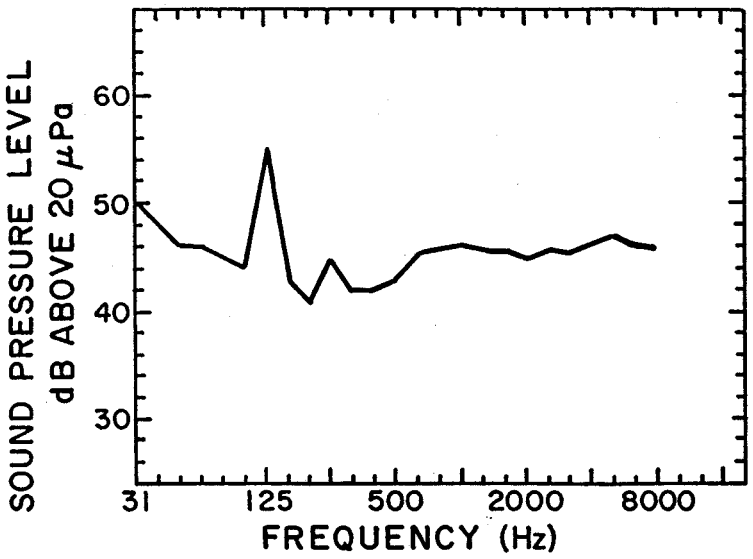

Fig 5
Example of Frequency Spectrum of
AC Transmission-Line Audible Noise in Rain

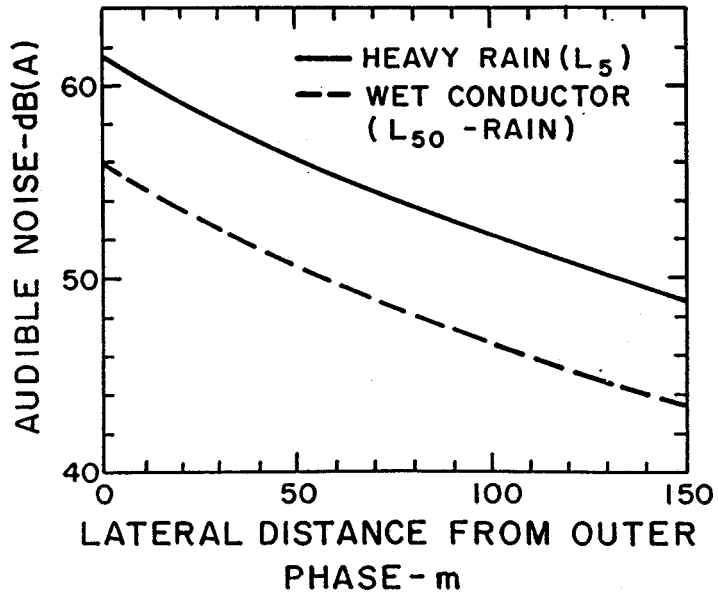

Fig 6
Example of Audible Noise Lateral Profile

Copyright The Institute of Electrical and Electronics Engineers, Inc.
Provided by IHS under license with IEEE
No reproduction or networking permitted without license from IHS
Not for Resale

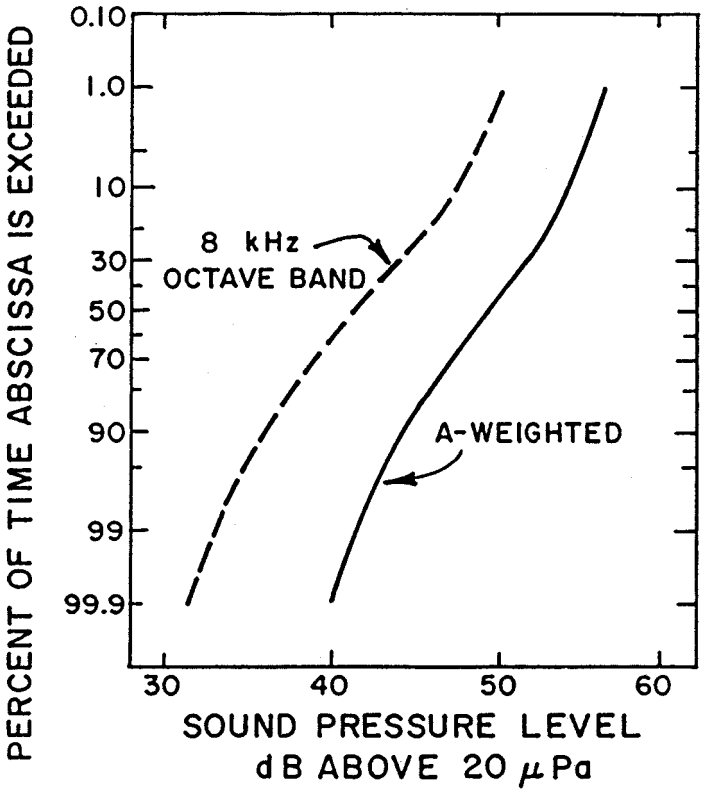

Fig 7
Example of Cumulative Distribution Curves
of Transmission-Line Noise Data

Copyright The Institute of Electrical and Electronics Engineers, Inc.
Provided by IHS under license with IEEE
No reproduction or networking permitted without license from IHS
Not for Resale

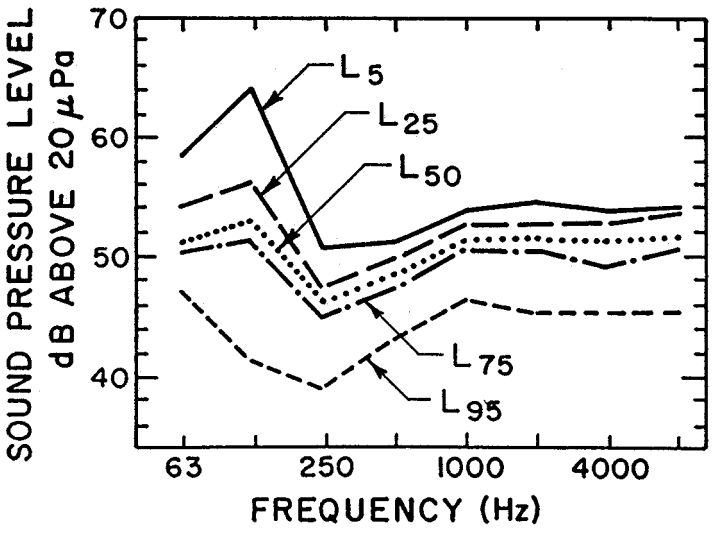

Fig 8
Example of Plots of Frequency-Spectrum
Exceedance Levels of Transmission-Line Noise

Copyright The Institute of Electrical and Electronics Engineers, Inc.
Provided by IHS under license with IEEE
No reproduction or networking permitted without license from IHS
Not for Resale

Appendix A
Recording Requirements — Transmission-Line Audible-Noise Sounds

(This appendix is not a part of IEEE Std 656-1992, IEEE Standard for the Measurement of Audible Noise From Overhead Transmission Lines, but is included for information only.)

A1. Introduction

Interest in the recording of audible-noise sounds for psychoacoustic purposes has resulted in the formation of an IEEE Psychoacoustics Task Force and has prompted the Canadian Electrical Association to sponsor a project in this area. This appendix covers minimum requirements for tape recording the audible noise generated by corona from transmission lines, where the records are to be used for general subjective evaluations and/or special psychoacoustic purposes.

A2. Minimum Requirements

Fig A1 shows a block diagram of instrumentation system components that should be used to specify minimum requirements for the recording of EHV line corona sounds on magnetic tape.

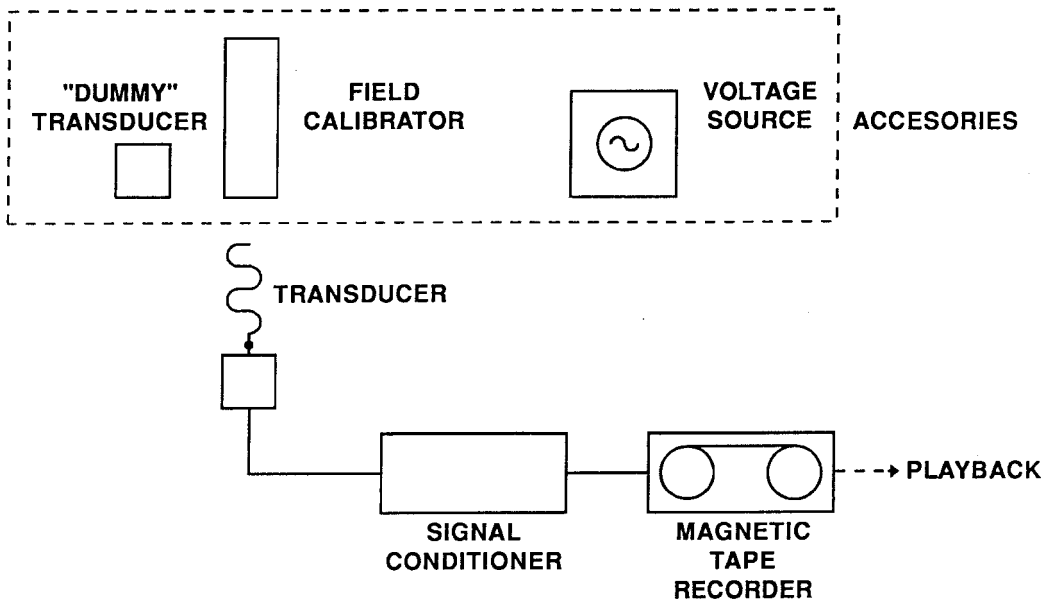

Fig A1
Minimum Data Recording System

--`,,`-`-`,,`,,`,`,,`---
Copyright The Institute of Electrical and Electronics Engineers, Inc.
Provided by IHS under license with IEEE
No reproduction or networking permitted without license from IHS
Not for Resale

A2.1 General System. The system should contain the following:

(1) Microphone system and accessories:

(a) The microphone and the outdoor microphone system should meet the requirements of ANSI S1.4-1983 [1].
(b) Accessories (wind screen, rain shield, etc.) should meet the system accuracy specifications.
(c) System accuracy should be measured using
• a calibrator, ±3 dB
• a piston phone, ±1 dB
(d) During recording, the microphones should be positioned 15 m from the outside phase at 1.5 m or 3 m above ground.

(2) Signal conditioning equipment, located between the transducer and the tape recorder, may consist of a preamplifier, microphone power supply, amplifier, etc. As a minimum, the signal-conditioning system shall include a calibrated attenuator. Frequency weighting networks in ANSI S1.4-1983 [1] should not be used for psychoacoustic recordings.

(3) A magnetic tape recorder that meets National Association of Broadcasters (NAB)[5] standards and has the following features:

(a) Number of tracks: 4
(b) Tape speed: 38 cm/s
(c) Tape width: 1.27 cm

A3. System Performance Requirements

The system performance from the microphone (transducer), as determined through suitable playback of the tape, shall meet the requirements of ANSI S1.4-1983 [1]. In particular,

(1) Frequency responses within:

100 Hz – 10 000 Hz: ±2 dB
50 Hz – 12 000 Hz: +2, –3 dB
30 Hz – 16 000 Hz: +2, –4 dB

(2) Signal-to-noise ratio relative to the 3% total harmonic distortion (THD) signal level:

20 Hz – 20 kHz unweighted: 51 dB or more

NOTE: This test should preferably be done at the field installation, using a dummy microphone, in order to ensure that the electric field from the line is not affecting the recording.

(3) Flutter (0.5–200 Hz unweighted):

0.2% rms or less

[5]National Association of Broadcasters, 1771 North Street, NW, Washington, DC 20036, USA.

Copyright The Institute of Electrical and Electronics Engineers, Inc.
Provided by IHS under license with IEEE
No reproduction or networking permitted without license from IHS
Not for Resale

A4. Operational Requirements

The operational procedures and precautions specified in this standard should be followed. In addition, the following items should be observed for each tape:

(1) A recording of known sound-pressure level from a field calibrator, with all changes of the calibrated attenuator noted.
(2) A recording of the system electrical noise floor, recorded with the dummy microphone, at the attenuator settings used for data recording.
(3) A recording of a sweep tone or random noise covering the frequency range of 30 Hz – 16 000 Hz.
(4) Data recordings should be made at an rms level of –7 to –17 dB below the 3% THD level.
(5) Every effort should be made to obtain data recordings that are free of audible extraneous background noise and field attenuator changes, and that are at least 10 s in duration if the signal level is constant ±3 dB. If the data signal level varies more than ±3 dB, recordings should be at least 2 min in duration.

It is also appropriate to include the following information on the data logging system:

(1) Radio interference at 0.500 MHz.
(2) Environmental data — temperature, relative humidity, rate of precipitation, and wind speed and direction.
(3) Octave band (31.5 Hz to 16 kHz), A-weighted AN SPL and broad band (unweighted) at the line and ambient locations.

An example of a recording system used in the field to record corona sounds from operating EHV lines is given in Fig A2.

Copyright The Institute of Electrical and Electronics Engineers, Inc.
Provided by IHS under license with IEEE
No reproduction or networking permitted without license from IHS
Not for Resale

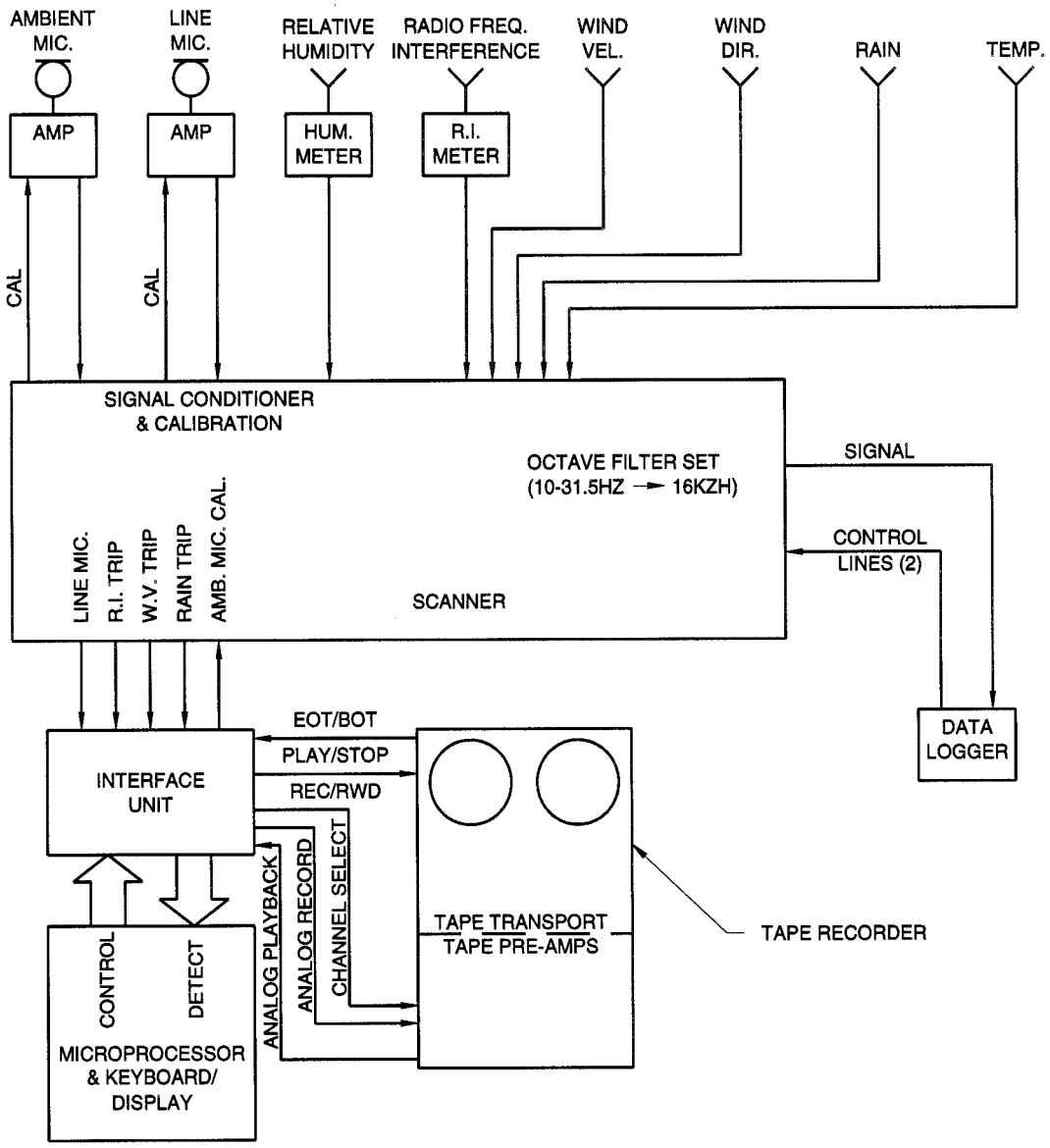

Fig A2
Recording and Data Logging Instrumentation

Copyright The Institute of Electrical and Electronics Engineers, Inc.
Provided by IHS under license with IEEE
No reproduction or networking permitted without license from IHS
Not for Resale