IEEE Standards

IEEE Std 643™-2004
(Revision of
IEEE Std 643-1980)

643™

IEEE Guide for Power-Line Carrier Applications

IEEE Power Engineering Society

Sponsored by the
Power System Communications Committee

IEEE

3 Park Avenue, New York, NY 10016-5997, USA

8 June 2005

Print: SH95245
PDF: SS95245

Copyright The Institute of Electrical and Electronics Engineers, Inc.
Provided by IHS under license with IEEE
No reproduction or networking permitted without license from IHS

Not for Resale

Recognized as an
American National Standard (ANSI)

IEEE Std 643™-2004
(Revision of
IEEE Std 643-1980)

IEEE Guide for Power-Line Carrier Applications

Sponsor

Power System Communications Committee
of the
IEEE Power Engineering Society

Approved 24 March 2005

American National Standards Institute

Approved 8 December 2004

IEEEm-SA Standards Board

Abstract: The purpose of this guide is to provide application information to users of carrier equipment as applied on power transmission lines. Since the major applications of the power-line carrier (PLC) is for protective relaying, special consideration for these applications has been included. Information related to the expanding usage of carriers on distribution lines below 69 kV is not specifically covered. Detailed equipment design information is avoided as this is primarily the concern of equipment manufacturers.
Keywords: carrier equipment, insulated shield-wire systems, intrabundle conductor systems, power-line carrier, power transmission lines

The Institute of Electrical and Electronics Engineers, Inc.
3 Park Avenue, New York, NY 10016-5997, USA

Copyright © 2005 by the Institute of Electrical and Electronics Engineers, Inc.
All rights reserved. Published 8 June 2005. Printed in the United States of America.

IEEE is a registered trademark in the U.S. Patent & Trademark Office, owned by the Institute of Electrical and Electronics Engineers, Incorporated.

Print: ISBN 0-7381-4067-8 SH95245
PDF: ISBN 0-7381-4068-6 SS95245

No part of this publication may be reproduced in any form, in an electronic retrieval system or otherwise, without the prior written permission of the publisher.

Copyright The Institute of Electrical and Electronics Engineers, Inc.
Provided by IHS under license with IEEE
No reproduction or networking permitted without license from IHS
Not for Resale

IEEE Standards documents are developed within the IEEE Societies and the Standards Coordinating Committees of the IEEE Standards Association (IEEE-SA) Standards Board. The IEEE develops its standards through a consensus development process, approved by the American National Standards Institute, which brings together volunteers representing varied viewpoints and interests to achieve the final product. Volunteers are not necessarily members of the Institute and serve without compensation. While the IEEE administers the process and establishes rules to promote fairness in the consensus development process, the IEEE does not independently evaluate, test, or verify the accuracy of any of the information contained in its standards.

Use of an IEEE Standard is wholly voluntary. The IEEE disclaims liability for any personal injury, property or other damage, of any nature whatsoever, whether special, indirect, consequential, or compensatory, directly or indirectly resulting from the publication, use of, or reliance upon this, or any other IEEE Standard document.

The IEEE does not warrant or represent the accuracy or content of the material contained herein, and expressly disclaims any express or implied warranty, including any implied warranty of merchantability or fitness for a specific purpose, or that the use of the material contained herein is free from patent infringement. IEEE Standards documents are supplied "**AS IS**."

The existence of an IEEE Standard does not imply that there are no other ways to produce, test, measure, purchase, market, or provide other goods and services related to the scope of the IEEE Standard. Furthermore, the viewpoint expressed at the time a standard is approved and issued is subject to change brought about through developments in the state of the art and comments received from users of the standard. Every IEEE Standard is subjected to review at least every five years for revision or reaffirmation. When a document is more than five years old and has not been reaffirmed, it is reasonable to conclude that its contents, although still of some value, do not wholly reflect the present state of the art. Users are cautioned to check to determine that they have the latest edition of any IEEE Standard.

In publishing and making this document available, the IEEE is not suggesting or rendering professional or other services for, or on behalf of, any person or entity. Nor is the IEEE undertaking to perform any duty owed by any other person or entity to another. Any person utilizing this, and any other IEEE Standards document, should rely upon the advice of a competent professional in determining the exercise of reasonable care in any given circumstances.

Interpretations: Occasionally questions may arise regarding the meaning of portions of standards as they relate to specific applications. When the need for interpretations is brought to the attention of IEEE, the Institute will initiate action to prepare appropriate responses. Since IEEE Standards represent a consensus of concerned interests, it is important to ensure that any interpretation has also received the concurrence of a balance of interests. For this reason, IEEE and the members of its societies and Standards Coordinating Committees are not able to provide an instant response to interpretation requests except in those cases where the matter has previously received formal consideration. At lectures, symposia, seminars, or educational courses, an individual presenting information on IEEE standards shall make it clear that his or her views should be considered the personal views of that individual rather than the formal position, explanation, or interpretation of the IEEE.

Comments for revision of IEEE Standards are welcome from any interested party, regardless of membership affiliation with IEEE. Suggestions for changes in documents should be in the form of a proposed change of text, together with appropriate supporting comments. Comments on standards and requests for interpretations should be addressed to:

Secretary, IEEE-SA Standards Board

445 Hoes Lane

Piscataway, NJ 08854

USA

NOTE—Attention is called to the possibility that implementation of this standard may require use of subject matter covered by patent rights. By publication of this standard, no position is taken with respect to the existence or validity of any patent rights in connection therewith. The IEEE shall not be responsible for identifying patents for which a license may be required by an IEEE standard or for conducting inquiries into the legal validity or scope of those patents that are brought to its attention.

Authorization to photocopy portions of any individual standard for internal or personal use is granted by the Institute of Electrical and Electronics Engineers, Inc., provided that the appropriate fee is paid to Copyright Clearance Center. To arrange for payment of licensing fee, please contact Copyright Clearance Center, Customer Service, 222 Rosewood Drive, Danvers, MA 01923 USA; +1 978 750 8400. Permission to photocopy portions of any individual standard for educational classroom use can also be obtained through the Copyright Clearance Center.

Copyright The Institute of Electrical and Electronics Engineers, Inc.
Provided by IHS under license with IEEE
No reproduction or networking permitted without license from IHS
Not for Resale

Introduction

This introduction is not part of IEEE Std 643-2004, IEEE Guide for Power-Line Carrier Applications.

Since the first release of this document in 1980, many additions have been made to the information presented. The first release was to replace a 1954 AIEE Committee Report, Guide to Application and Treatment of Channels for Power-Line Carrier. This revision hopes to clarify areas where technology has improved as well as to add sections specifically concentrated to protective relaying applications. Although there are still uses in North America of the power-line carrier (PLC) for voice and supervisory applications, the predominate application is for dedicated protective relaying channels. To accomplish this task, the Power-Line Carrier Subcommittee of the Power Systems Communications Committee worked closely with the Communications Subcommittee of the Power Systems Relaying Committee through parallel working groups in both committees.

Details of the changes would be too numerous to note here. This guide is both a reference for the experienced PLC engineer as well as for the novice.

PLC is not unique to only North America. Although it is not possible to describe differences in applications and philosophies, the principles presented here remain the same worldwide.

This guide is dedicated to Mr. Herb Dobson, posthumously, as he was a noted expert in the field of PLC and contributed significantly to its widespread usage and the information in this guide.

Notice to users

Errata

Errata, if any, for this and all other standards can be accessed at the following URL: http://standards.ieee.org/reading/ieee/updates/errata/index.html. Users are encouraged to check this URL for errata periodically.

Interpretations

Current interpretations can be accessed at the following URL: http://standards.ieee.org/reading/ieee/interp/index.html.

Patents

Attention is called to the possibility that implementation of this standard may require use of subject matter covered by patent rights. By publication of this standard, no position is taken with respect to the existence or validity of any patent rights in connection therewith. The IEEE shall not be responsible for identifying patents or patent applications for which a license may be required to implement an IEEE standard or for conducting inquiries into the legal validity or scope of those patents that are brought to its attention.

Copyright © 2005 IEEE. All rights reserved.

Copyright The Institute of Electrical and Electronics Engineers, Inc.
Provided by IHS under license with IEEE
No reproduction or networking permitted without license from IHS
Not for Resale

Participants

The following is a list of participants in the Power Line Carrier Subcommittee of the Power System Communications Committee (PSCC).

Roger E. Ray, *Chair*

Robert Bratton	Jerry Finley	Brad D. Nelson
Thomas Dahlin	John Miller	Miriam Sanders
Ed Derencinovic	George Morgan	Walter Seamon
Ray Fella		Al Vnencak

The following is a list of participants in the Power-Line Carrier Working Group of the Power System Relaying Committee (PSRC).

Brad D. Nelson, *Chair*
Mark Simon, *Vice-Chair*

Doug A. Dawson	Jim Huddleston III	Tim Phillippe
Paul Drum	Jim Ingleson	Roger E. Ray
Charles Fink	Bill Lowe	Miriam Sanders
Jerry Hohn		John Zipp

The following members of the individual balloting committee voted on this guide. Balloters may have voted for approval, disapproval, or abstention.

William Ackerman	Gaetano Grano	Gary Michel
Munnu Bajpai	David Hartmann	John W. Miller
Kenneth Behrendt	Irwin Hasenwinkle	George Morgan
Stuart Bouchey	Harold Held	Bradley Nelson
Robert Bratton	Jerry Hohn	Michael Newman
Daniel Brosnan	Edward Horgan Jr.	Charles Ngethe
Gustavo Brunello	James D. Huddleston III	Chris Osterloh
Terrence Burns	Barry Jackson	Roger Pandanda
Mark Carpenter	David W. Jackson	Percy E. Pool
Manish Chaturvedi	Clark Jacobson	Roger E. Ray
Guru Dutt Dhingra	George Kalacherry	Charles Rogers
Thomas Dahlin	Joseph L. Koepfinger	James Ruggieri
R. Daubert	Terry Krummrey	Miriam Sanders
Byron Davenport	Gerald Lantz	Tony Seegers
Ed Derencinovic	William Lowe	Tarlochan Sidhu
Paul Drum	Gregory Luri	Mark Simon
Amir El-Sheikh	William Majeski	Veselin Skendzic
Gary Engmann	Donald Marihart	Kevin Stephan
Charles Fink	Thomas Mccaffrey	Charles Sufana
Kenneth Fodero	Michael McDonald	Richard Taylor
Jerry Goerz		John Tengdin

--`,,`,`,-`-`,,`,,`,`,,`---
Copyright © 2005 IEEE. All rights reserved.
Copyright The Institute of Electrical and Electronics Engineers, Inc.
Provided by IHS under license with IEEE
No reproduction or networking permitted without license from IHS
Not for Resale

When the IEEE-SA Standards Board approved this guide on 8 December 2004, it had the following membership:

Don Wright, *Chair*
Steve M. Mills, *Vice Chair*
Judith Gorman, *Secretary*

Chuck Adams
H. Stephen Berger
Mark D. Bowman
Joseph A. Bruder
Bob Davis
Roberto de Boisson
Julian Forster*
Arnold M. Greenspan
Mark S. Halpin
Raymond Hapeman
Richard J. Holleman
Richard H. Hulett
Lowell G. Johnson
Joseph L. Koepfinger*
Hermann Koch
Thomas J. McGean
Daleep C. Mohla
Paul Nikolich
T. W. Olsen
Ronald C. Petersen
Gary S. Robinson
Frank Stone
Malcolm V. Thaden
Doug Topping
Joe D. Watson

*Member Emeritus

Also included are the following nonvoting IEEE-SA Standards Board liaisons:

Satish K. Aggarwal, *NRC Representative*
Richard DeBlasio, *DOE Representative*
Alan H. Cookson, *NIST Representative*

Michelle Turner
IEEE Standards Project Editor

Copyright © 2005 IEEE. All rights reserved.

Copyright The Institute of Electrical and Electronics Engineers, Inc.
Provided by IHS under license with IEEE
No reproduction or networking permitted without license from IHS
Not for Resale

Contents

1. Scope 1

2. Normative references 1

3. PLC channels 2

4. PLC applications 3

4.1 Relaying applications 3
4.2 Telemetry applications 12
4.3 Voice applications 13

5. Power-line channel considerations 13

5.1 Line characteristics 13
5.2 Channel losses 15
5.3 Line loss calculations 22
5.4 Noise 32
5.5 Power cable circuits 35
5.6 Overhead line/cable circuits 36
5.7 Cross-station attenuation 39
5.8 Coupling methods 42
5.9 Channel bandwidth and modulation types 45
5.10 Effects of faults on PLC channels 46

6. Frequency selection 47

6.1 Factors influencing selection 47
6.2 Requirements of new facilities 47
6.3 Existing frequencies 50
6.4 Frequency planning 50
6.5 Line coupling and tuning 51
6.6 Noise and line attenuation 51
6.7 Power cable circuits 52
6.8 Combination power cable/overhead line circuits 52

7. Coupling components 52

7.1 Line traps 52
7.2 Coupling capacitors 61
7.3 Line tuners and bypasses 63
7.4 Coaxial cables/lead-in conductors 75
7.5 Auxiliary coupling devices 77
7.6 Coupling components selection 83

8. Performance calculations 84

8.1 Factors involved in channel performance calculations 84
8.2 Single-function individual-channel case 88
8.3 Multifunction, multichannel case 93

Copyright © 2005 IEEE. All rights reserved.

Copyright The Institute of Electrical and Electronics Engineers, Inc.
Provided by IHS under license with IEEE
No reproduction or networking permitted without license from IHS

Not for Resale

9. Special applications 95

9.1 Intrabundle channels 95
9.2 Insulated shield wires 99
9.3 PLC on HVDC lines 101

10. PLC verification and testing 102

10.1 Testing of new and modified PLC systems 102
10.2 Testing and evaluation of misoperations 110
10.3 Checkback testing philosophies 115
10.4 Testing intervals for components 116

11. Future trends 116

11.1 Introduction 116
11.2 Electronic equipment 116
11.3 System improvements 117
11.4 Applications 117
11.5 Digital PLC 117

Annex A (informative) Relative values conversion for decibels 119

Annex B (informative) Bibliography 123

Copyright © 2005 IEEE. All rights reserved.

Copyright The Institute of Electrical and Electronics Engineers, Inc.
Provided by IHS under license with IEEE
No reproduction or networking permitted without license from IHS
Not for Resale

and Electronics Engineers, Inc.
IEEE
itted without license from IHS
Not for Resale

IEEE Guide for Power-Line Carrier Applications

1. Scope

The purpose of this guide is to provide application information to users of carrier equipment as applied on power transmission lines. Since the major applications of the power-line carrier (PLC) is for protective relaying, special consideration for these applications has been included. Information related to the expanding usage of carriers on distribution lines below 69 kV is not specifically covered. Detailed equipment design information is avoided as this is primarily the concern of equipment manufacturers.

Material on PLC channel characteristics is presented along with discussions on intrabundle conductor systems and insulated shield-wire systems. Procedures are provided for the calculation of channel performance. Data for the calculations are drawn from various sections of the guide. The coupling components considered are line traps, coupling capacitors, line tuners, coaxial cables, hybrids, and filters. Frequency selection practices and future trends are discussed.

An effort has been made to coordinate this guide with the CIGRE Guide [B49][1] and IEC 60353,[2] IEC 60481, IEC 60495, and IEC 60663.

2. Normative references

The following referenced documents are indispensable for the application of this guide. For dated references, only the edition cited applies. For undated references, the latest edition of the referenced document (including any amendments or corrigenda) applies.

ANSI C63.2, American National Standard for Electromagnetic Noise and Field Strength Instrumentation, 10 Hz to 40 GHz—Specifications.[3]

ANSI C93.1, American National Standard Requirements for Power-Line Carrier Coupling Capacitors and Coupling Capacitor Voltage Transformers (CCVT).

ANSI C93.3, American National Standard Requirements for Power-Line Carrier Line Traps.

[1]The numbers in brackets correspond to those of the bibliography in Annex B.

[2]Information on references can be found in Clause 2.

[3]ANSI publications are available from the Sales Department, American National Standards Institute, 25 West 43rd Street, 4th Floor, New York, NY 10036, USA (http://www.ansi.org/).

Copyright © 2005 IEEE. All rights reserved.

Copyright The Institute of Electrical and Electronics Engineers, Inc.
Provided by IHS under license with IEEE
No reproduction or networking permitted without license from IHS
Not for Resale

ANSI C93.4, American National Standard Requirements for Power-Line Carrier Line—Tuning Equipment.

ANSI C93.5, American National Standard Requirements for Single Function Power-Line Carrier Transmitter/Receiver Equipment.

IEC 60353, Line Traps for A.C. Power Systems.[4]

IEC 60481, Coupling Devices for Power Line Carrier Systems.

IEC 60495, Recommended Values for Characteristic Input and Output Quantities of Single Sideband Power-Line-Carrier Terminals.

IEC 60663, Planning of (Single Sideband) Power Line Carrier Systems.

IEEE Std C37.90.1™, IEEE Standard for Surge Withstand Capability (SWC) Tests for Protective Relays and Relay Systems.

IEEE Std C37.90.2™, IEEE Standard for Withstand Capability of Relay Systems to Radiated Electromagnetic Interference From Transmitters.

IEEE Std C37.90.3™, IEEE Standard Electrostatic Discharge Tests for Protective Relays.[5]

3. PLC channels

A PLC channel includes the signal path from the transmitting electronic equipment at one terminal, through its coupling equipment, over the power line, through the tuning equipment at the receiving end, and into the electronic equipment at the receiving terminal. In bidirectional applications, a similar return path is provided.

As shown in Figure 1, a basic PLC system consists of three distinct parts: the terminal assemblies, the coupling equipment, and the transmission line. Terminal assemblies consist of transmitters, receivers, and protective relays. The coupling equipment consists of the line tuner, coupling capacitor, and line trap. The coupling equipment provides a means of connecting the terminals to selected points on the power transmission line. The transmission line provides a suitable path for the transmission of carrier energy between terminals in the PLC band of frequencies. At the terminals, one or more transmitters and/or receivers may be required, depending on the number of functions to be performed.

[4]IEC publications are available from the Sales Department of the International Electrotechnical Commission, Case Postale 131, 3, rue de Varembé, CH-1211, Genève 20, Switzerland/Suisse (http://www.iec.ch/). IEC publications are also available in the United States from the Sales Department, American National Standards Institute, 25 West 43rd Street, 4th Floor, New York, NY 10036, USA (http://www.ansi.org/).

[5]IEEE publications are available from the Institute of Electrical and Electronics Engineers, Inc., 445 Hoes Lane, Piscataway, NJ 08854, USA (http://standards.ieee.org/).

Copyright © 2005 IEEE. All rights reserved.
Copyright The Institute of Electrical and Electronics Engineers, Inc.
Provided by IHS under license with IEEE
No reproduction or networking permitted without license from IHS
Not for Resale

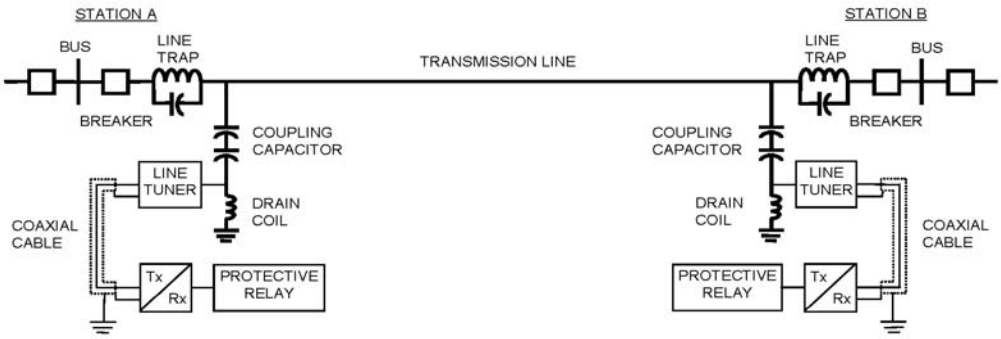

Figure 1—Diagram of a PLC channel

Coupling of carrier energy to the transmission line is accomplished by the coupling capacitor, which is the physical link to the transmission line that has a high impedance to the power frequency and a low impedance to carrier frequencies. The drain coil, which is part of the coupling capacitor (or additionally in the line tuner), provides a low impedance path to ground for power frequencies and a high impedance path for carrier frequencies. The user should also be aware that if an optional drain coil is placed in the line tuner, the parallel combination of the two drain coils should be considered (refer to 7.3.4). The line tuner provides impedance matching between terminal assemblies and the transmission line. It also provides for resonant tuning with the coupling capacitor. The line trap is inserted into power lines to minimize the loss of carrier energy and to prevent external faults from shorting the carrier signal on the unfaulted line. The transmission line provides the path for the PLC energy.

PLC is a technique by which low radio-frequency (RF) currents are propagated over metallic conductors, which may be either ac or dc overhead transmission lines or pipe type cable. The primary difference between high-voltage (HV) power transmission and PLC transmission is the frequency of operation. Although the fundamental principles of both transmissions are the same, many factors of primary importance at PLC frequencies are negligible at power frequencies.

Frequencies in the range of 30–500 kHz have been employed for PLC. This frequency range is high enough to be isolated from the power frequency energy and the noise it creates, but not so high as to encounter excessive attenuation. Although frequencies somewhat lower than 30 kHz can be used, it is difficult to efficiently couple these frequencies to the transmission line by using coupling capacitors.

Anytime voltage is discussed or V is used in an equation in this guide, it is always RMS voltage unless otherwise specified.

4. PLC applications

4.1 Relaying applications

4.1.1 Interfacing PLC with relays

Many factors determine the form taken by the power-line carrier–relay interface, among which are the type of protection scheme, the channel speed requirements, and the distance from the PLC equipment to the relays. This distance, if excessive, can affect both the output and the keying input conditions.

Copyright © 2005 IEEE. All rights reserved.

Copyright The Institute of Electrical and Electronics Engineers, Inc.
Provided by IHS under license with IEEE
No reproduction or networking permitted without license from IHS
Not for Resale

The current generation of PLCs all use optically isolated low-energy keying inputs and solid-state outputs. Some users have found that, when the carrier set is separated from the protective relays, the keying leads can pick up enough noise to key the carrier. One possible solution is to install an electromechanical relay at the carrier set to key the carrier. This relay will usually not be affected by the noise picked up by the keying leads, but it will delay the keying by the relay's pickup time.

4.1.2 Carrier operation types

Two basic types of PLC channels are used most commonly in protective relaying schemes in North America: single-function ON–OFF [amplitude modulated (AM)] and single-function frequency shift keyed (FSK). Single-function ON–OFF carriers are primarily used in blocking schemes. Single-function FSK carriers are used in permissive, unblocking, and direct trip protection schemes.

4.1.2.1 ON–OFF carrier

The ON–OFF carrier scheme uses an AM signal transmitted via the power line to communicate relay logic to the remote relay terminal. The signal is either on or off. In directional comparison blocking (DCB) schemes, the local relay sends carrier (block) when the fault is external (reverse) to the protected line. The block is sent continuously as long as the local relay senses a fault in the external (reverse) direction. The blocking signal received at the remote relay blocks the remote relay fast trip elements. In phase comparison schemes, the local relay initiates a carrier signal in phase with a (sequence filtered) model of the local end fault current. The phase of the carrier signal received at the remote end is compared with the phase of a (sequence filtered) model of the remote end current to determine if the fault is on the protected line or outside the protected line.

4.1.2.2 FSK carrier

The FSK carrier employs a two- or three-state frequency-shifted signal that is used to transmit relay information to the remote end of the protected zone. The normal signal is called a guard signal and is monitored at the receiving end for continuity. To signal the remote end, the frequency is shifted up or down a specified amount. The simplest FSK scheme is a direct transfer trip (DTT) scheme. A guard signal is continuously transmitted. When keyed, the transmitter shifts from guard to the trip frequency. The receiver will then operate to trip a breaker.

Other schemes employing FSK are permissive transfer trip, directional comparison unblocking (DCU), and phase comparison unblocking. In the latter two schemes, the normal and shifted frequencies are often given special names to denote their function. In DCU, the normal frequency is usually called "block" rather than "guard" and the shifted frequency is "unblock." In phase comparison unblocking, the two frequencies are called "mark" and "space."

4.1.3 Protection system design using PLC channels

The power-line carrier provides a manner of communicating protection information between the terminals of a transmission line. The engineer must take into account the special characteristics of PLC in the design of the protection logic.

If the transmission line to which PLC equipment is applied is faulted, the PLC signal being sent may be attenuated by the fault. If the attenuation is so great as to cause the signal to fall below the remote PLC receiver threshold, the remote receiver will squelch and its output will indicate that no signal is present. Each type of protective relaying scheme that uses PLC equipment compensates for the channel characteristics differently. The protection system must be designed with additional logic and timers to cope with PLC signal attenuation conditions.

--`,,`,`,-`-`,,`,,`,`,,`---
Copyright © 2005 IEEE. All rights reserved.
Copyright The Institute of Electrical and Electronics Engineers, Inc.
Provided by IHS under license with IEEE
No reproduction or networking permitted without license from IHS
Not for Resale

4.1.4 Directional comparison

Directional comparison includes schemes that use directional relays for fault sensing and PLC for the communications channel. There are several types of directional comparison schemes.

4.1.4.1 DCB

In this protection scheme, the carrier tripping relays are directional and are set to overreach the remote end of the protected line. The carrier tripping relays will initiate tripping for a detected fault unless a carrier block signal is received.

For a fault beyond the remote terminal, the reverse looking blocking relays at the remote terminal will see the fault and key their carrier to send a block signal to the local terminal. Since the local tripping relays are picked up, the failure of the block signal to be received will result in tripping of the local terminal. Internal faults will be sensed by the tripping relays on both ends and no blocking signals will be sent; therefore, high-speed tripping will occur at both ends.

Most schemes use an offset mho multiphase relay and a nondirectional ground relay to start the blocking signal transmitter. If the tripping relay picks up, it will stop the blocking signal, which allows the remote end to trip if its tripping relays are picked up.

The DCB scheme uses the ON–OFF carrier almost exclusively for its communications. Each transmitter sends the same frequency, or the frequencies will be slightly offset. Three terminal applications of DCB will have the frequencies slightly offset to avoid signal cancellation, which might otherwise lead to tripping of some terminals.

Each DCB transmitter is normally off. For external faults only, one terminal will see the fault as external and send a blocking signal to the remote end(s) of the line. Receipt of a remotely sent block signal prevents the local overreaching tripping elements from tripping the local breaker as long as the block signal is received within the coordination timer setting and the blocking signal remains until the fault is cleared.

A coordinating timer is required to allow time to receive the block signal from the remote end transmitter. These timers delay tripping from 3 ms to 12 ms. They are typically set at 8 ms, which means that once a fault is sensed by the tripping relays, there will be an 8 ms delay to wait for the blocking signal. If no signal is received, the trip path will be completed, which thereby trips the breaker. Transient blocking timers are also required to prevent remote tripping on current reversals with parallel lines.

Since the normal state is for the carrier to be off, some sort of testing must be provided to prove the integrity of the channel and carrier equipment. This periodic testing will help prevent most misoperations for failure of the carrier equipment. This testing is typically done with some sort of manual or automatic checkback equipment. See Clause 10.

The keying of the blocking signal should be accomplished by using the contact opening carrier start. In this manner, there will be no interruptions (holes) in the blocking carrier from contact bounce. This usually uses a “b” contact, which opens to remove either positive or negative voltage from the carrier keying circuit. If a solid-state output is used from the relay, then contact bounce is not a problem. Many new digital relays are supplied with contact opening carrier start outputs. It is very important for the utility protection engineer to remember why open contact keying is needed. A contact closing carrier start will increase the probability of a false trip, which is caused by contact bounce causing holes in the blocking signal. A contact de-bounce circuit may be employed in the input of the carrier set keying circuit to avoid the carrier holes. It must be remembered that the contact de-bounce circuit will cause a delay in the dropout of the blocking signal by the dropout time of the de-bounce logic.

Copyright © 2005 IEEE. All rights reserved.

Copyright The Institute of Electrical and Electronics Engineers, Inc.
Provided by IHS under license with IEEE
No reproduction or networking permitted without license from IHS
Not for Resale

4.1.4.2 DCU

The DCU system uses a single-function FSK PLC channel for transmitting relaying information to the remote end of the protective zone. The scheme consists of directional phase and ground relays looking forward and overreaching the protected line's remote terminals, with a FSK transmitter and receiver at each end of the line. There is a discrete frequency for each transmitter. Each transmitter continuously sends a block signal except when a fault is detected by the overreaching relays.

For a detected internal fault, the transmitter is shifted to an unblock frequency. Receiver logic allows tripping for receipt of an unblock signal or during 150 ms after loss of signal. Loss of signal may occur because of a fault on the line. During that time, if the directional relay picks up, a trip signal will be issued to the breaker. If the relays do not operate within the 150 ms window, the scheme will be locked out. This process prevents erroneous tripping during extended loss of carrier signal.

For an external fault that occurs beyond the remote terminal, the tripping relays pick up at the local terminal and send an unblock signal to the remote end. Because the other end is receiving an unblock signal and the fault is behind it, its tripping relays are not picked up, so no trip command is issued. The local terminal will have the tripping relays picked up, but it is still receiving a block signal from the remote end, so no local tripping will occur.

The advantage of this scheme is that it uses fewer elements and does not require carrier checkback equipment because the carrier signal is continuously transmitted and monitored. The disadvantage is that tripping is delayed by the channel and logic time, plus extra frequencies are needed, i.e., a separate frequency between each transmitter/receiver pair. For three terminal lines, six frequencies are needed.

4.1.4.3 Permissive overreaching transfer trip (POTT)

Overreaching transfer trip schemes use a single-function frequency shift channel and require a channel signal to trip. When using a power line as the channel medium, faults may attenuate the signal, which prevent it from reaching the remote end. Therefore, these systems are not generally used with PLC channels.

4.1.5 Phase comparison

Phase comparison relaying compares the phase angle of the fault currents at the two terminals of the protected line. If the two secondary currents are essentially in-phase, the relays detect an internal fault and initiate a trip to the appropriate circuit breakers. If the two secondary currents are approximately 180 degrees out-of-phase, the relays sense an external fault and do not initiate a trip. To do the comparison, a dependable communication channel must exist between the two ends.

Phase comparison systems are typically current-only, which means that voltage transformer inputs are unnecessary. Except for the segregated phase comparison system, a composite sequence filter current network provides single-phase voltage output proportional to a defined ratio of positive, negative, and zero sequence current input. During a fault condition, the relay converts the single-phase voltage output to a square wave (local square wave) to key the channel to the remote terminal and for comparison with the received signal (remote square wave). Relay logic delays the local square wave by the amount equal to the channel time to provide a more accurate comparison.

Phase comparison systems as used with the carrier are divided into the following three major categories; differences are related to channel equipment and sequence filter outputs:

a) Single-phase comparison blocking

b) Dual-phase comparison unblocking

c) Segregated phase comparison unblocking

--`,,`,`,,-`-`,,`,,`,`,,`---
Copyright © 2005 IEEE. All rights reserved.
Copyright The Institute of Electrical and Electronics Engineers, Inc.
Provided by IHS under license with IEEE
No reproduction or networking permitted without license from IHS
Not for Resale

4.1.5.1 Single-phase comparison blocking

This type of relay scheme uses the single-function ON–OFF carrier for communications. Outputs of the composite sequence current networks are fed into a squaring amplifier, which keys the carrier to produce a square wave. The relay at the remote end compares the received signal to its local square wave and produces a trip output if an internal fault is detected. Refer to Figure 2.

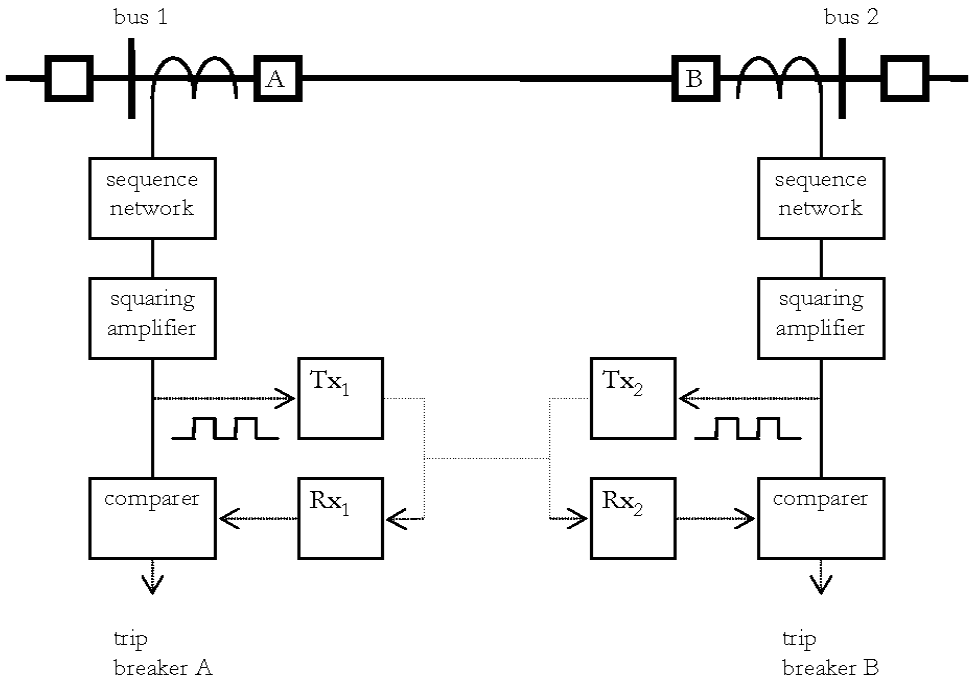

Figure 2—Phase comparison blocking scheme functional diagram

This process is a blocking system because the receipt of a signal is not required for an internal fault. When no signal is received and the fault level detectors are picked up, a trip will occur because the remote signal is not available to negate the internal square wave from the sequence networks. If the fault is external and a carrier failure occurs, either locally or remotely, an erroneous trip will occur because blocking will not be set up.

Two levels of fault detectors are involved with this scheme. The lower level starts keying the carrier with square waves, and the higher level permits tripping on proper comparison.

On lines with high load currents and composite sequence current filter networks including positive sequence, it is not always possible to set the level detectors so they only pick up for faults. Therefore, the relays may be exchanging square waves during non-fault conditions. Impedance relays may be required to supervise fault and level detectors, which would require the addition of voltage transformers to the line.

As an alternative, a phase comparison relay with only negative sequence sensing will be insensitive to the three-phase load. It will also be insensitive to three-phase faults. Therefore, impedance relays will be needed to detect and trip for three-phase faults.

Copyright © 2005 IEEE. All rights reserved.

Copyright The Institute of Electrical and Electronics Engineers, Inc.
Provided by IHS under license with IEEE
No reproduction or networking permitted without license from IHS
Not for Resale

4.1.5.2 Dual-phase comparison unblocking

This type of relay scheme uses the single-function FSK carrier for communications. An FSK transmitter and receiver with separate frequencies are used at each line terminal. Continuous channel monitoring is provided, because either a mark or a space carrier signal is always transmitted.

The output of the sequence networks are fed though the square-wave amplifier into the keying input of the transmitter. The transmitter shifts to mark on the positive output and stays at space for the negative output.

The local signal is fed into two comparators, where one compares the local and remote mark signals and the other compares the space signals. The logic is designed so internal faults produce a comparator output. Loss of signal (neither mark or space frequency) will produce a loss of signal condition, which will cause the comparators to produce an output if the fault detectors are picked up. After 150 ms of signal loss, the logic will block the output to prevent a trip output. For an external fault, the local and remote inputs to the comparators will be out of phase and no output will be produced. If there is a loss of signal during the external fault, there will be output from the comparators and the relay will trip.

4.1.5.3 Segregated phase comparison unblocking

The segregated phase comparison system can be divided into two types: a two subsystem scheme and a three subsystem scheme. The two subsystem scheme operates from a delta current (Ia–Ib) for all multiphase faults and from a ground ($3I_0$) current subsystem for all ground faults. The three subsystem scheme has a subsystem for each phase (Ia, Ib, and Ic). Several unique features of this scheme are described by Sanders and Ray [B156].

The basic operation of the relay scheme is that each subsystem operates as a dual-phase comparison system which is described in 4.1.5.2. The two subsystem scheme would require two bidirectional FSK channels, and the three subsystem scheme would require three separate FSK channels. Continuous channel monitoring would be provided, because either a mark or a space carrier signal is always transmitted on each separate channel.

4.1.6 DTT

DTT, sometimes referred to as intertripping, describes the process of sending a trip signal from one substation to another. It differs from other carrier applications such as DCB or DCU in that, in most cases, the design is such that the remote terminal only needs the receipt of a proper DTT signal to trip.

DTT is often used to protect equipment such as transformers and circuit breakers. A common application involves a transformer tapped into a line with no high-side circuit breaker. The transformer relays trip the local breakers, and the remote end is tripped by the DTT function. DTT is also used for line protection, notably in DCB applications in which the DTT function may be used as a supplement to trip a weak terminal from the strong one.

The modulation technique is always FSK, with the standby mode usually called “guard,” and the shifted mode called “trip.” Channel times range from about 5 to 25 ms. Because fault detectors or other supervision may not be used, the equivalent of two transmitters at two different frequencies and two receivers (for illustration purposes designated A and B) can be used with the transmitters in parallel and the receivers in series for security or in parallel for dependability. In some schemes, a guard signal is required for a certain number of milliseconds before a trip is recognized.

--`,,`,`,,`-`-`,,`,,`,`,,`---

 Copyright © 2005 IEEE. All rights reserved.

Copyright The Institute of Electrical and Electronics Engineers, Inc.
Provided by IHS under license with IEEE
No reproduction or networking permitted without license from IHS Not for Resale

A “shared channel” scheme is one that uses the DTT equipment for both direct tripping and for the line protection. For example, the A and B transmitters are both keyed by the direct trip relays but only the A transmitter by the line relays. At the remote terminal, receiver A may be used as the permissive input for the line relaying scheme and receivers A and B for the direct trips. When selecting equipment for a shared channel application, use the same criteria as would be used for the line protection, and select the same coordination delays.

4.1.7 Channel timing

4.1.7.1 Noise effects on coordination

The receiver circuit will filter out most noise, but occasionally a noise burst will come in near or at the trip frequency. To prevent this problem, the receiver may have some additional noise detector circuits.

Trip delay: In most frequency shift receivers, the trip frequency must be present for a predefined time before closing its output. This time delay may be fixed or adjustable depending on the circuit in the receiver. For DTT applications, the time may be set longer to add more security, whereas permissive tripping may not need the added time for security.

Bipolar noise detector: This circuit protects against signals that shift frequency from guard to trip and then back to guard, but not staying at trip frequency for the trip delay to activate. In this case, the bipolar noise detector adds more time to the trip delay to prevent misoperations.

Signal level: The receiver may have circuits to detect high or low signal levels to block tripping.

Refer to Clause 10.

4.1.7.2 Coordinating time delays and current reversal

Pilot relaying systems of the directional comparison type (i.e., DCB, DCU, and POTT) use status information from relays at both (or all) ends of a line in making a decision to trip. Information about the directional indication (forward or reverse) at the remote end of the line is communicated over the PLC channel and combined with local forward or reverse indication.

To ensure security in schemes of this type, coordinating time delays usually have to be provided to accommodate

a) Possible differences in relay response times at the two ends of the line
b) Time delay introduced by the PLC channel

For example, in a blocking scheme, the tripping function must be delayed a short time to ensure that any blocking signal from the remote end has time to arrive. As shown in the Figure 3, the tripping relay at A must be delayed to ensure that it does not trip for a fault in the next line section. The required delay X (as shown in Figure 3) is the sum of

a) Maximum difference in the response time of the forward relay at A and the reverse relay at B [B – A]
b) PLC channel time
c) Plus a time margin

Copyright © 2005 IEEE. All rights reserved.

Copyright The Institute of Electrical and Electronics Engineers, Inc.
Provided by IHS under license with IEEE
No reproduction or networking permitted without license from IHS
Not for Resale

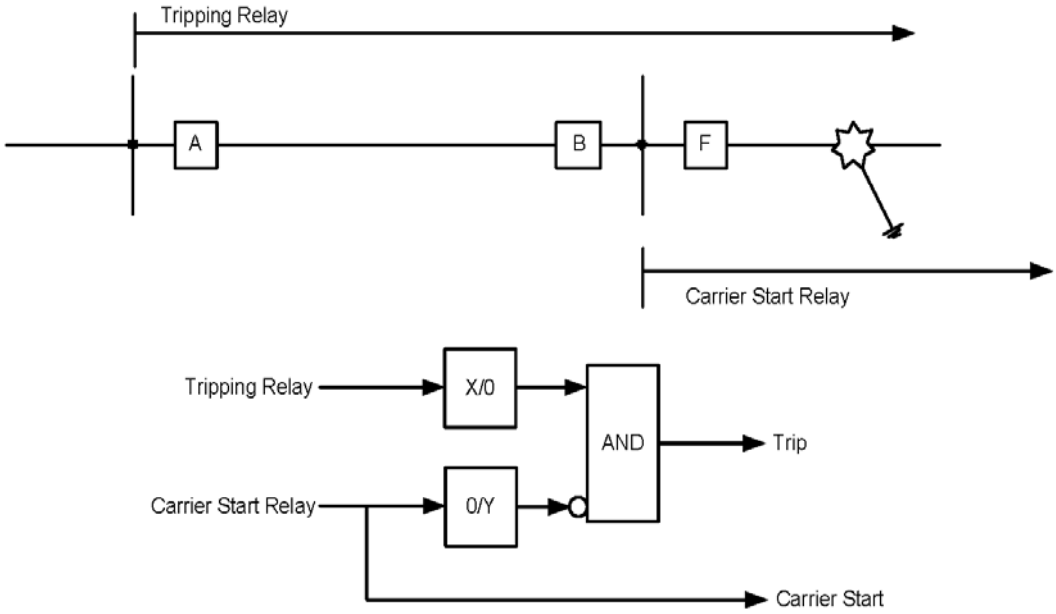

Figure 3—Blocking scheme time delay

Likewise, a reset-coordinating time delay Y (as shown in Figure 3) is required to be sure that, when breaker F opens to clear the external fault, the blocking signal received at A is not removed before the tripping relay at A resets. This coordinating delay usually takes the form of a signal extending timer that prolongs the blocking signal after the reset of the reverse-looking relay at B. The required signal extension time is

a) Maximum difference in the reset time of the forward relay at A and the reverse relay at B [A – B]

b) Minus the PLC channel dropout time

c) Plus a time margin

It is difficult to evaluate the difference in relay operating and reset times without thorough testing under a wide variety of system and fault conditions. Manufacturers of relay systems generally provide guidance for setting of these coordination timers. In some relaying systems, particularly those using electromechanical relays, the required time delays have been built into the “carrier auxiliary” relays and are not intended to be user adjustable.

It is undesirable to set these coordinating timers any longer than is necessary. The pickup coordinating timer delays tripping for internal faults, and the reset coordinating timer may delay tripping for faults that evolve from external to internal, e.g., a fault involving the breaker B. Note that the inherent channel pickup delay *increases* the required setting of the pickup coordinating timer, whereas the channel dropout delay *decreases* the required setting of the reset coordinating timer.

Unblocking and permissive overreaching schemes do not require coordinating timers for the simple external fault coordination. The operating principle requires that both a received trip signal and a local forward relay operation be present before tripping can occur. For the external fault, relay A receives no trip permission and relay B sees a reverse fault, so there is no logic “race” that must be resolved.

Copyright © 2005 IEEE. All rights reserved.
Copyright The Institute of Electrical and Electronics Engineers, Inc.
Provided by IHS under license with IEEE
No reproduction or networking permitted without license from IHS
Not for Resale

Current Reversal: Another fault situation requiring timing coordination occurs when two protected lines run in parallel or substantially in parallel through short interconnecting lines. This situation is commonly referred to as current reversal. In Figure 4, a fault has occurred on line C–D near breaker D. Relay A can see the fault but is prevented from tripping because the directional information from the relay at breaker B indicates that the fault is in the reverse direction.

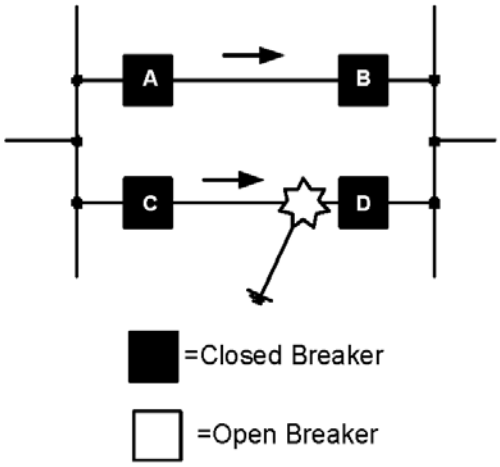

Figure 4—Setup for current reversal scenario

If the line A–B protection is a blocking scheme, then the relay at B sends a blocking signal to A to prevent tripping. Conversely, if the scheme is an unblocking or a permissive overreaching type, then B continues the normal guard signal to A, which indicates that A should not trip.

If breaker D should open before breaker C on the faulted line, the fault current in line A–B suddenly reverses direction as shown in Figure 5.

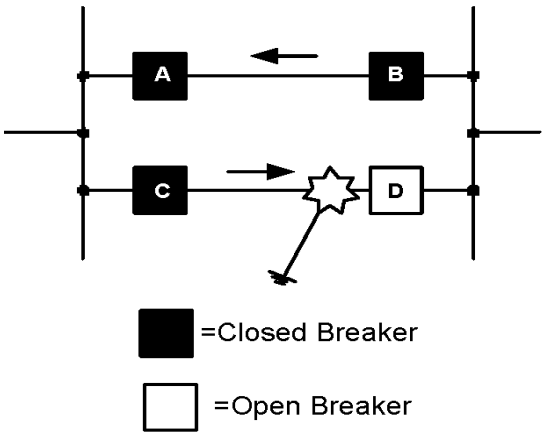

Figure 5—Current reversal occurrence

In a blocking scheme, relays at both A and B have a tendency to trip incorrectly during the current reversal, but they are prevented from doing so by the pickup and reset coordination timers. The pickup coordination timer at B prevents the forward-looking relay at B from tripping while waiting for the reverse-looking relay at A to send a blocking signal. Also, the reset timer at B continues transmission of a blocking signal to A long enough to permit the forward-looking relay at A to reset.

Copyright © 2005 IEEE. All rights reserved.

Copyright The Institute of Electrical and Electronics Engineers, Inc.
Provided by IHS under license with IEEE
No reproduction or networking permitted without license from IHS
Not for Resale

In a permissive overreaching or unblocking scheme, the initial fault near D will cause the forward-looking relay at A to send trip permission to B. When the current reverses, relay B will suddenly see a fault in its forward direction and time coordination is necessary to ensure that B does not trip before the permissive signal from A can be removed. The simplest solution to this race is a pickup timer for the forward-reaching relay, just like that described for the blocking scheme. The required timing for this timer is the sum of

a) The difference between the reset time of relay A and the pickup time of relay B [A – B]

b) The channel dropout time

c) Plus a time margin

Because the permissive and unblocking schemes do not require a pickup delay unless a current reversal is about to occur, more sophisticated logic is often employed that inserts the pickup delay timer only when current reversal conditions are anticipated. This process avoids the tripping delay that may otherwise be experienced while the pickup timer is timing out for a normal internal fault. Imminent current reversal can be sensed by receipt of trip permission with no forward relay pickup or by operation of a reverse-looking relay function provided for that purpose.

4.1.7.3 Channel delays when using phase comparison or current differential systems

Proper operation of phase comparison equipment requires both phase and symmetry alignment between the local and the remote comparison quantities. Phase alignment is related to the absolute channel time between the remote relay and the local one. Symmetry alignment compensates for the channel time variation between the receiver detecting a transition from the low-frequency state to the high-frequency state under frequency shift transmission schemes, or from the OFF–ON state versus the ON–OFF state for schemes using ON–OFF keying.

Adjustment of the phase and symmetry requires injection of test currents that are in phase with one another. Assuming that the relay comparison network is operating properly, the use of a single phase-to-ground current will provide a suitable source for adjustment. Some possible methods are described in 10.1.3.

4.2 Telemetry applications

Telemetry applications include monitoring of voltage, current, watts, vars, and so on. Telemetry information is a relatively slow analog and does not require a high-speed data rate. As a result, a narrowband PLC channel can be used for this function.

An early form of telemetry uses the pulse duration with the ON–OFF carrier (AM); the analog signal is transmitted for a given duration. The length of the duration corresponds to a given analog level. This form of telemetry takes time and is suitable for slow changing levels.

Later forms of telemetry use FSK to transmit information. A frequency within a narrow bandwidth is shifted to convey the analog level to the remote. Analog level changes can be conveyed much faster than in the pulse duration method.

Most telemetry information is performed by converting the analog signal into binary information that is used to shift the FSK frequency high and low. This result may be accomplished by either using a narrowband FSK tone, which is then used to modulate a single side-band (SSB) PLC, or using a dedicated narrowband set.

--`,,`,`,,`-`-`,,`,,`,`,,`---

Copyright © 2005 IEEE. All rights reserved.

Copyright The Institute of Electrical and Electronics Engineers, Inc.
Provided by IHS under license with IEEE
No reproduction or networking permitted without license from IHS Not for Resale

4.3 Voice applications

Voice communications can be imposed over the PLC using AM. An ON–OFF transceiver in a half-duplex mode or an FSK transceiver in a full-duplex mode may be used. A narrow bandwidth (3 kHz or more) around a center frequency will allow for normal speech recognition. The disadvantage is that voice communication requires a greater signal-to-noise ratio (SNR) and bandwidth than other carrier applications.

Voice continues to be used in SSB systems. On SSB systems, the voice bandwidth may be limited to as low as 2000 Hz.

5. Power-line channel considerations

Application of a PLC system for a communications channel considers the types of channels available, the transmitter–receiver equipment characteristics, and the reliability and quality of performance required. An adequate transmission path must be furnished under both varying system configuration and adverse weather conditions. Preliminary application studies of a PLC system should evaluate the trapping and coupling requirements, the carrier channel loss, the noise level at the receiver, the effect of weather on losses and noise, the calculation of signal-to-noise ratio (SNR), and frequency spacing requirements.

5.1 Line characteristics

5.1.1 Characteristic impedance

The characteristic impedance [B71] of a transmission line (sometimes called surge impedance) is defined as the ratio between the voltage and the current of the traveling wave on a line of infinite length. This ratio of voltage to its corresponding current at any point in the line is a constant impedance, Z_0. It is a function of the per-unit length series resistance, series inductance, shunt capacitance, and shunt conductance of the line, and it is independent of line length. The constant characteristic impedance of a two-wire line can be expressed as

$$Z_0 = \frac{V+}{I+} = \sqrt{\frac{R + j\omega L}{G + j\omega C}} \quad (1)$$

where

R is the resistance per unit length, in ohms

L is the inductance per unit length, in henrys

G is the shunt conductance per unit length, in mhos (siemens)

C is the shunt capacitance per unit length, in farads

$\omega = 2\omega f$ f is the frequency in Hertz

In practice, at PLC frequencies, the quantities $j\omega L$ and $j\omega C$ are large by comparison with R and G, so that the latter can be neglected, and the expression for characteristic impedance can be reduced to

$$Z_0 = \sqrt{\frac{L}{C}} \quad (2)$$

Copyright © 2005 IEEE. All rights reserved.

Copyright The Institute of Electrical and Electronics Engineers, Inc.
Provided by IHS under license with IEEE
No reproduction or networking permitted without license from IHS
Not for Resale

By applying conventional formulas for L and C to Equation (2),

$$Z_0 = 276\log\frac{D}{R} \text{ for } \frac{D}{R} \geq 20 \tag{3}$$

is obtained, where D is the distance between conductors and r is their radius in the same units. Equation (3) expresses the characteristic impedance of a line consisting of two aerial wires. For a single aerial conductor at a height h aboveground and radius r, the characteristic impedance is

$$Z_0 = 138\log\frac{2h}{r} \tag{4}$$

For bundled conductors, the geometric mean radius (GMR) is used for r in Equation (3) and Equation (4). The GMR is defined in Figure 6 for three arrangements, where GMR_c is the GMR of a single conductor.

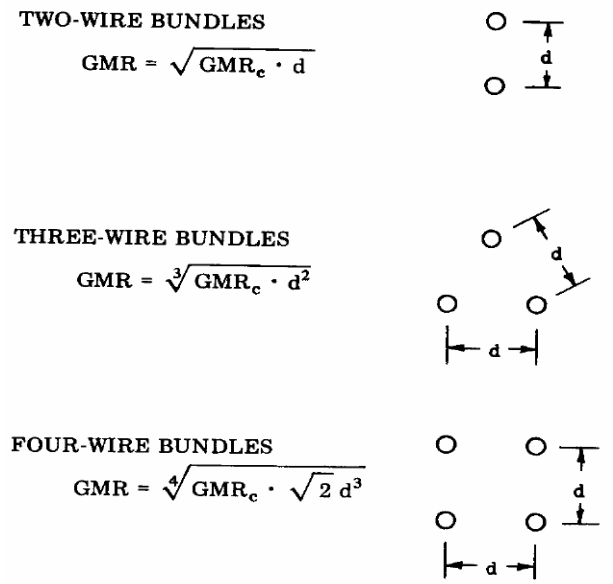

Figure 6—GMR of conductor bundles

In the case of a three-phase transmission line, the calculation of the characteristic impedance is more involved and is further complicated by the use of bundled conductors. If a transmission line is terminated in its characteristic impedance, no energy will be reflected from the termination, and the sending-end behavior is the same as though the line was infinitely long.

An impedance network of six impedances, as shown in Figure 7, is required to terminate a three-phase line in its characteristic impedance. Because a transmission line is seldom, if ever, terminated in its characteristic impedance network, the impedance observed by a set of coupling equipment connected to the transmission line, either phase-to-phase or phase-to-ground, will be affected by reflected energy on the uncoupled phases.

Another and more practical value frequently called characteristic impedance is the value of the impedance to which the carrier coupling equipment is matched to obtain minimum mismatch and thus achieve maximum power transfer. This value of characteristic impedance is affected by the terminating impedance of the phase(s) not used in the coupling circuit. Measurements indicate that for phase-to-phase coupling, as the terminating impedance of the uncoupled phases varies from an open circuit to a short circuit, the characteristic impedance varies slightly. However, much larger differences occur for phase-to-ground coupling.

Copyright © 2005 IEEE. All rights reserved.
Copyright The Institute of Electrical and Electronics Engineers, Inc.
Provided by IHS under license with IEEE
No reproduction or networking permitted without license from IHS
Not for Resale

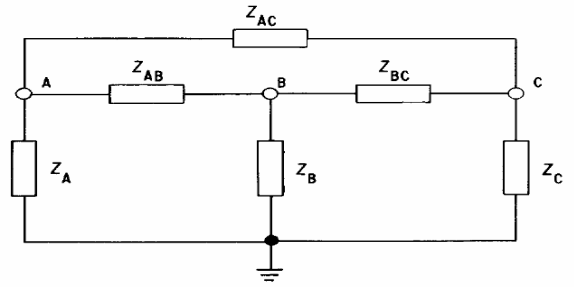

Figure 7—Terminating network for a three-phase line

As shown in Equation (3), the characteristic impedance is based on the radius of the conductors and the distance between conductors. In general, both dimensions increase with higher voltages so that the ratio remains nearly the same. Therefore, there is very little difference in the characteristic impedances of lines of various voltages as long as only one conductor is used for each phase. Lower values of characteristic impedance will exist on extra-high-voltage (EHV) transmission lines where bundled conductors are used with an effective radius that is much larger than the radius of a single conductor. Table 1 shows the range of values that can be expected from a wide variety of lines.

Table 1—Range of characteristic impedances for PLC circuits on overhead lines

Transmission line conductor (each phase)	Characteristic impedance in Ω (phase-to-ground)	Characteristic impedance in Ω (phase-to-phase)
Single wire	350–500	650–800
Bundled (two-wire)	250–400	500–600
Bundled (four-wire)	200–350	420–500

The values of the characteristic impedance of power cables vary greatly from those for overhead lines, and there is also a large variation among different types of cables. In general, there has not been much information published on power cables, such as the high-frequency characteristic impedance, and it may be required to perform measurements on the actual cable used for a particular circuit. Generally the characteristic impedance of a power cable will be between 10 Ω and 60 Ω.

5.2 Channel losses

5.2.1 Losses

The loss in power as a signal travels through the various components and media of a transmission system is best measured in decibels, which allows the losses to be added to arrive at a total loss for the system without regard to the change in impedance in the system. The loss in decibels is defined as follows:

$$\text{LOSS} = 10\log\frac{P_1}{P_2} \tag{5}$$

$$\text{LOSS} = 20\log\frac{V_1}{V_2} \tag{6}$$

Copyright © 2005 IEEE. All rights reserved.

Copyright The Institute of Electrical and Electronics Engineers, Inc.
Provided by IHS under license with IEEE
No reproduction or networking permitted without license from IHS
Not for Resale

$$\text{LOSS} = 20\log\frac{I_1}{I_2} \quad (7)$$

where P is power, V is voltage, and I is current and the subscripts indicate points of measurement in the channel. Equation (6) and Equation (7) are valid only if the circuit impedances are equal at the points where the measurements are made. The assumption that a junction represents a particular impedance, such as a 50 Ω coaxial connection to a coupling device will lead to an erroneous result. The only valid measurement made in a system is across a resistive load of known value, which can only be made at the output of a part of the system or at the input to a device with the device removed and replaced with its nominal input impedance.

The total attenuation of a PLC communications channel consists of series and shunt losses. The series losses can take the form of coupling components such as impedance matching transformers, RF symmetrical and skewed hybrids, series L/C circuits used for isolating transmitters, various filters, line tuners, and coupling capacitors. Other series losses include the resistive losses of the transmission line. The line losses are usually lumped together, including the series and shunt losses of the transmission line, and are called line loss. Other series losses may include the mismatch losses of an overhead line/power cable junction as well as the losses incurred from not matching the various components of the circuit perfectly at impedance change points.

Shunt losses may include line trap losses, tap line losses, bypass losses (which may include series losses from line tuners and other coupling components), and effects from the number of lines on the bus side of an isolating line trap as well as the station capacitance. On cable circuits, the series losses are critical because of the low characteristic impedance of the cable relative to resistive losses in other components, including coupling capacitors.

5.2.2 Attenuation in overhead lines

At PLC frequencies, a typical power line operates as a transmission line that is long compared with the wavelength of the signal frequency. The performance of such a line can be predicted with reasonable accuracy by applying modal theory, provided that all relevant parameters are known and a suitable computer program is available to the application engineer. For some applications on short lines, adequate performance predictions can be made based on attenuation measurements made on similar lines.

Three basic methods are used to determine this loss. These will be discussed in a later section. The line loss in this does not include any losses from external influences. The losses relate to the characteristics and parameters of the line. The line loss is primarily a function of the following parameters:

Transmitter frequency
Type of line construction
Line geometry
Phase conductor size, material, surface, condition, etc.
Ground wire size, material, location, etc.
Method of coupling
Type and location of transpositions
Weather conditions
Ground conductivity
Insulator leakage

The loss in an overhead transmission line increases with increasing frequency because of increasing radiation losses, conductor losses, dielectric losses, and coupling to the ground wire, to the ground and to towers, and to other lines in the vicinity. The losses may be reduced by using smaller phase-wire spacing-to-height ratios and higher conductivity materials in the phase wires. The line voltage dictates the spacing and

Copyright © 2005 IEEE. All rights reserved.
Copyright The Institute of Electrical and Electronics Engineers, Inc.
Provided by IHS under license with IEEE
No reproduction or networking permitted without license from IHS
Not for Resale

height of the phase wires, the effective phase wire cross section, and the number of conductors per phase. Because of the use of larger phase conductors and increasing number of phase conductors per phase, HV transmission lines exhibit decreasing loss with increasing voltage.

For economical reasons, the conductor and ground wires used in power line construction are made of different materials. The phase conductors are usually made of a stranded steel core covered with stranded aluminum outer conductors. The losses at carrier frequencies depend on the composition of the conductors and their resistive and reactive characteristics. Some circuits may use different conductor sizes between stations when different line geometries are used.

The loss in the ground wires is especially important in single phase-to-ground coupling. The ground wires may also be of stranded steel and aluminum conductors or of stranded steel. The losses in the ground wires will influence the line losses for low-loss modes near the coupling locations. The coupling method will influence the losses in the line. Center-phase-to-ground is usually used on horizontally constructed lines for noncritical application for protection channels. For more critical applications, where it is important to receive a signal under fault conditions, for severe weather conditions, or for long lines with higher losses, a phase-to-phase or three-phase coupling method may be used to improve received signal strength or margin. The multiphase coupling method may revert to a phase-to-ground or a phase-to-phase coupling under fault conditions and assure that a protection signal will be received under conditions when signal reception is most critical. Line-to-line coupling methods are also used to increase redundancy on double circuit lines for horizontal or vertical lines. Coupling to the phase wire, which assumes the physical center position for the longest distance, will usually result in the lowest line loss for phase-to-ground coupling.

Transpositions in long transmission lines will increase the losses compared with nontransposed lines. A single transposition in a very long line can result in 6 dB of added loss. The loss is usually not that severe, especially on lines with multiple transpositions, and on short lines. Three transpositions will generally allow the phase conductor to resume their original positions and usually give lower losses than an even number of transpositions.

Weather conditions can introduce additional losses that are also a function of the frequency of the signals on the line. Hoar frost forming on the line may increase the losses by factors of 4 to 5 over the fair weather losses on the line. Ice on the conductors has relatively the same effect, except that the high-frequency effect is more severe. Lines that are subject to icing, frost, or heavy rains should use the lowest frequencies, and multiphase coupling should be considered to increase margins to acceptable magnitudes during times of extreme weather conditions. The existence of dirty insulators in some metropolitan areas where fly-ash deposits are severe can influence line losses in foul weather.

Poor ground conductivity can add to line losses when the return path is through the ground, as in phase-to-ground coupling schemes, which is especially true in areas where the soil is dry and sandy. The soil acts as a very good insulator, and the preparation of the ground mat at the substations to enhance the conductivity at the coupling locations is important to reduce line losses. The mat must extend along the line for several spans to reduce the coupling losses caused by the soil conditions.

5.2.3 Attenuation in power cables

The losses in power cables are greater than those in overhead line circuits. The specific type of cable including the conductor size, material and number of skid wires, type of insulation material, diameter, and voltage rating will influence the cable loss characteristic. The manufacturer may supply this data as well as the RF characteristic impedance and attenuation. Most data available on power cables have been accumulated by users, because the characteristics of the cables are basically related to the transfer of power at 50 Hz or 60 Hz and are not concerned with RF characteristics.

Copyright © 2005 IEEE. All rights reserved.

Copyright The Institute of Electrical and Electronics Engineers, Inc.
Provided by IHS under license with IEEE
No reproduction or networking permitted without license from IHS
Not for Resale

Power cables with cross-bonded sheaths are not suitable for use at PLC frequencies. The losses of a typical power cable for 138 kV use is shown in Figure 8. The losses per kilometer show that long cable circuits (in excess of 16 km) are not usable for PLC circuits. Most PLC circuits on power cable installations are confined to the frequency range below 100 kHz, with the majority being below 60 kHz. New insulating materials used in lower voltage distribution cables may reduce the losses in higher voltage cables and result in higher characteristic impedances.

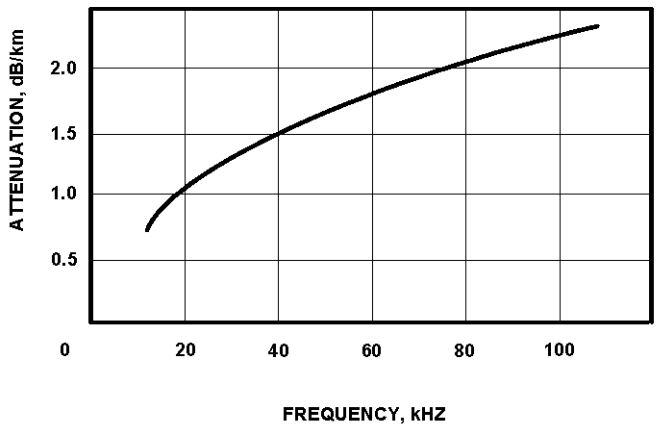

Figure 8—Typical losses for a 138 kV power cable

Most underground power cable installations are single-conductor, self-contained, single- or three-phase cables. Experimental work on cryogenic cables may result in lower loss cables. Single-conductor, self-contained cables use a hollow oil-filled conductor and an oil-impregnated paper insulation. An extruded metal shield encases the insulation and conductor. The pipe-type cable uses a solid conductor with oil-impregnated paper insulation wrapped with synthetic tape layers and thin metallic tapes. One or three conductors are housed in a pipe that is filled with high-pressure oil or gas. The fluid may be pumped through the pipe to ensure a more even temperature under varying loading conditions, and the fluid will undergo cooling to remove the heat caused by losses in the system. Protective skid wires are wrapped around the conductor or conductors for protection during insertion in the pipe. Skid wire conductivity affects the HF attenuation. The characteristic impedance of power cables varies from 10 Ω to 60 Ω.

Representative values of attenuation on a 138 kV power cable are shown in Figure 8 for single-phase-to-ground coupling. Coupling in a three-phase cable for phase-to-phase insertion gives significantly lower losses than for single-phase-to-ground coupling. Most power cable installations are for single-phase cables. The modal coupling induced in overhead lines does not occur in single-phase power cables, and no advantage, except for redundancy, is gained by using multiphase coupling as was true for overhead line applications. The noise characteristics of power cables are superior to overhead lines because the conductors are not exposed to the weather or to other external influences.

5.2.4 Attenuation at discontinuities

The impedance looking into a short line not terminated in its characteristic impedance will vary depending on the mismatch at the load and the attenuation of the line. This variation is caused by reflections at the load that affect the impedance looking into the input of the line. It may be impossible to match a transmitter to the impedance of the line. When several transmitters are connected to this line, the variation in the impedance will give varying reflected power percentages for each transmitter and result in an unsatisfactory coupling and tuning circuit. This situation may be improved if the distance to the mismatch is known, and the frequencies may be selected to fall in between the maximum and minimum reflected impedances caused by the mismatch. Any change in the line could result in a change in the input impedance presented to the coupling equipment and result in unacceptable reflection of power. Where there is substantial loss between the insertion point and the location of the mismatch, the only loss sustained is the loss of the mismatch. The

Copyright © 2005 IEEE. All rights reserved.
Copyright The Institute of Electrical and Electronics Engineers, Inc.
Provided by IHS under license with IEEE
No reproduction or networking permitted without license from IHS
Not for Resale

loss from an impedance discontinuity or a mismatch between a line of characteristic impedance Z_0 and a load of Z_1 is given in decibels by

$$\mathrm{dB}_{\mathrm{LOSS}} = 20\log\left[\frac{Z_0 + Z_1}{2\sqrt{Z_0 Z_1}}\right] \tag{8}$$

This type of loss is common when an overhead line and a power cable form a junction without impedance matching at PLC frequencies.

The other type of discontinuity encountered on some overhead transmission lines is an untrapped stub line. A open stub line will reflect a low impedance at PLC frequencies, which are an odd number of quarter-wavelengths at the connection point. The open stub may be represented by a lightly loaded tap. This situation may result in complete frequency-dependent shorting of the main line at several PLC transmitter frequencies. The length of the stub line should be investigated to determine if the line length corresponds to a frequency being used on the main line. A stub line that is shorted will reflect a short-circuit impedance at all frequencies that are an even number of quarter-wavelengths at the connection point. A shorted stub may be represented by a heavily loaded tap or an overhead line terminated in a power cable. Either situation will result in no signal transmission past the connection point of the stub at the critical frequencies.

The solution to either situation is to install a line trap on the stub line where it is connected to the main line. Frequency selection, where taps are connected without line traps, can best be done by actually measuring the line and the coupling characteristic of the line. Wide-band line tuners are usually required. A line with multiple taps without traps represents a formidable challenge to couple multiple frequencies without end-to-end measurements. Any change in the circuit may disturb the impedance characteristics looking into either end.

5.2.5 Coupling losses

Coupling losses include all losses involved in the isolation and tuning equipment at both ends of the PLC installation between an individual transmitter and its companion receiver. These losses include hybrid and filter losses associated with the coupling circuit. Also included are cable, line tuner, coupling capacitor, and line trap losses. Mismatch losses caused by improper selection of IMT taps are also part of coupling losses.

5.2.5.1 Carrier frequency separation equipment

Several transmitters and receivers on a common coupling circuit require isolation elements to prevent signal absorption, interference, and intermodulation. Because all signals must be routed into one or two coaxial cables depending on the number of inputs to the line tuner, some type of combining or separation equipment must be present if more than one transmitter or receiver is used at a PLC terminal. These separation elements usually take the form of hybrids and various filter circuits. The filters may be simple series or parallel L/C units, more complex bandpass filters, or high-pass/low-pass branching filters. The loss of the individual elements varies with the type of element. Values of loss must be obtained from the manufacturer. Typical values are shown in Table 2 for some commonly used isolation elements.

5.2.5.2 Coaxial cable

Interconnections among the various transmitters, receivers, and isolation elements are usually made with RF coaxial cables. The length of these interconnections are short and can generally be ignored. The connection from the combined equipment to the line tuner requires a coaxial cable. The common type of cable, RG-8/U, has an attenuation characteristic that varies with frequency and is shown in Figure 9.

Copyright © 2005 IEEE. All rights reserved.

Copyright The Institute of Electrical and Electronics Engineers, Inc.
Provided by IHS under license with IEEE
No reproduction or networking permitted without license from IHS
Not for Resale

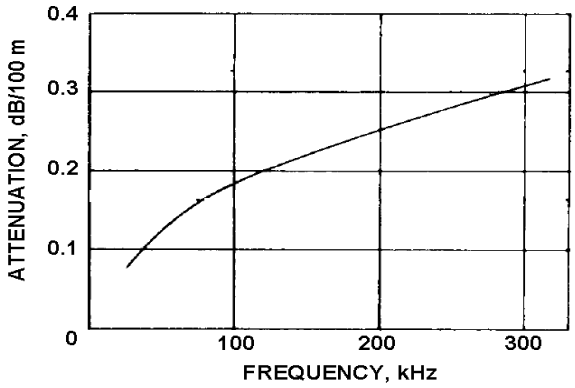

Figure 9—Attenuation characteristic of RG-8/U

Table 2—Attenuation of isolation elements

Separation equipment	Attenuation (dB)
Balanced hybrid	3.5
Skewed hybrid	
Transmit path	0.5
Receive path	12.0
L/C unit	1.0–3.0
Bandpass filter	0.5–2.5
Low-pass/high-pass filter	1.0

5.2.5.3 Line tuner losses

Line tuner losses are related to the number of tuning elements in the device, the tuning frequency, the impedance of the line or power cable, and the value of the coupling capacitor. The values vary widely with the application and can be requested from the manufacturer for a particular design. Losses may vary from 0.2 dB to 2 dB. More complex tuners will generally have higher losses than a simple resonant tuner. The bandwidth of the line tuner is the primary determiner of the losses.

5.2.5.4 Coupling capacitor losses

A high dissipation factor in a coupling capacitor may produce an effective series resistance of several ohms and can contribute to the coupling losses in the channel. For overhead lines, this added series resistance will usually represent a very small portion of the losses in the coupling circuit and can generally be ignored or lumped in with the line tuner losses. For power cables, this added series resistance will contribute a significant loss in the form of I2R losses to the coupling circuit. The contribution of the coupling capacitor to the coupling losses can add several decibels of loss to power cable coupling losses. The contribution is more severe as the characteristic impedance of the cable is reduced. The temperature behavior of the coupling capacitor value can contribute to the coupling losses by detuning the line tuner for wide temperature variations. Figure 10 shows a curve relating the behavior of a coupling capacitance with

Copyright © 2005 IEEE. All rights reserved.
Copyright The Institute of Electrical and Electronics Engineers, Inc.
Provided by IHS under license with IEEE
No reproduction or networking permitted without license from IHS
Not for Resale

temperature. For cable circuits where the bandwidth is very narrow and for line tuners resonated at low PLC frequencies below 60 kHz with low values of coupling capacitance, the tuning is very selective and variations in the capacitance can cause appreciable changes in the tuning of the series resonant circuit containing the coupling capacitor.

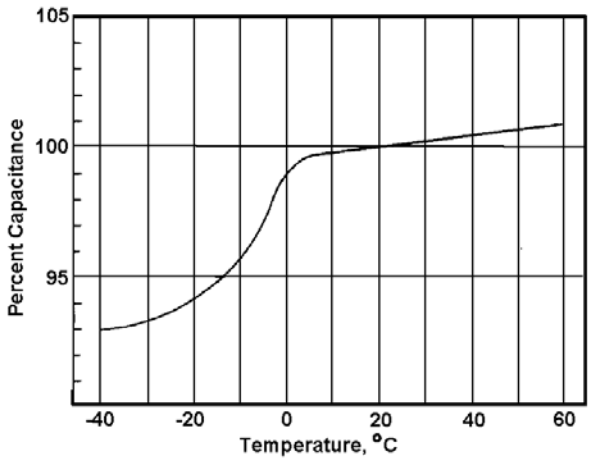

Figure 10—Coupling capacitor capacitance versus temperature

The insulation systems of modern coupling capacitors are less prone to large temperature variations in capacitance and exhibit lower dissipation factors than older designs. Also, higher values of capacitance are available at higher voltages, which will increase tuner bandwidths. Extra high capacitance coupling capacitors should be considered for power cable coupling circuits to reduce selectivity problems with low-frequency coupling circuits.

5.2.5.5 Shunt losses

Shunt coupling losses occur at the coupling locations and are primarily the result of losses caused by line traps and drain coils in the coupling capacitor or in the line tuner and are usually lumped with these elements of the coupling circuit. The sneak paths to ground caused by improper insulation of the lead-ins to coupling capacitors and aging coaxial cables are also examples of shunt losses. The leakage currents can be inductive, resistive, or capacitive. Proper treatment of lead-ins using adequate insulators can reduce these effects to negligible values. The line trap represents a fixed loss depending on the blocking impedance at the frequency used. The capacitance of the bus also contributes to the shunt loss caused by the line trap. Other lines connected to a bus can also reduce the bus impedance and increase the effective loss of the coupling circuit.

For a known value of shunt impedance, the shunt loss can be calculated using

$$dB_{LOSS} = 10\log\left|\frac{Z + Z_S}{Z_S}\right| \quad (9)$$

where

Z is the nominal circuit impedance

Z_S is the hunting impedance

Copyright © 2005 IEEE. All rights reserved.

Copyright The Institute of Electrical and Electronics Engineers, Inc.
Provided by IHS under license with IEEE
No reproduction or networking permitted without license from IHS
Not for Resale

5.3 Line loss calculations

5.3.1 General

The calculation of line losses can be done with the aid of tables and graphs of typical lines. This method is referred to as the "graphical method." The results are usually very conservative. The second technique involves the use of restricted formulas and assumptions and is referred to as "simplified modal analysis." This method requires either a computer or a programmable calculator to make efficient calculations. The lines analyzed using the second approach must be horizontally constructed ac lines. This method will give results closer to actual measurements for most applications. However, it cannot predict the existence of singularities caused by cancellations in some coupling schemes. The third method involves a physical analysis of the line(s) and generally puts no restrictions on the construction or parameters of the line. These programs can usually make calculations for ac well as dc HV lines, multiple lines, and do fault analysis and show temperature and weather effects. Tower dimensions, conductor dimensions and characteristics, ground wires and ground resistivity, transpositions, and so on are considered. This method will give line-loss data very close to the actual measured losses when coupling losses are considered.

The development of EHV transmission lines with transpositions has created new problems for the PLC communications engineer. The short lines of the past have been replaced with long lines where the actual losses in the line are important to design the PLC system with adequate SNR and margin. The received signal levels on short lines did not present a challenge to the communication engineer because there was adequate margin if the coupling circuits were properly designed and maintained. The construction of EHV lines required a more accurate method of obtaining and predicting the line losses before the actual construction. Modal analysis is a mathematical tool that provides a more accurate method of calculating PLC propagation, much like symmetrical component analysis can be used for predicting the response of three-phase systems. Modal analysis is not only a mathematical tool, but it can be readily identified in the physical world.

5.3.2 Graphical analysis

The graphical method makes use of a graph that represents the losses of a nominal HV line at 138 kV in the frequency range from 30 kHz to 300 kHz. The technique requires that the user plug in values from three tables representing the line voltage multipliers, considerations for the coupling method and the type of shield wires, and for transpositions. Figure 11 and Table 3, Table 4, and Table 5 give these parameters. There are fair weather multipliers as well as foul weather values for the attenuation curve. The change in losses because of foul weather conditions are not consistent from one voltage to the next. The information presented here is based on many years of experience and cumulative data collections by many individuals.

5.3.3 Simplified modal analysis

The essential assumptions for simplified modal analysis are the following:

a) Only one three-phase line in a horizontal plane is considered.

b) Surge impedances are the same for all phases.

c) The forms of the basic current modes are independent of frequency.

d) Instantaneous currents flowing in the three phase wires are either in phase or 180 degrees out of phase.

Copyright © 2005 IEEE. All rights reserved.
Copyright The Institute of Electrical and Electronics Engineers, Inc.
Provided by IHS under license with IEEE
No reproduction or networking permitted without license from IHS
Not for Resale

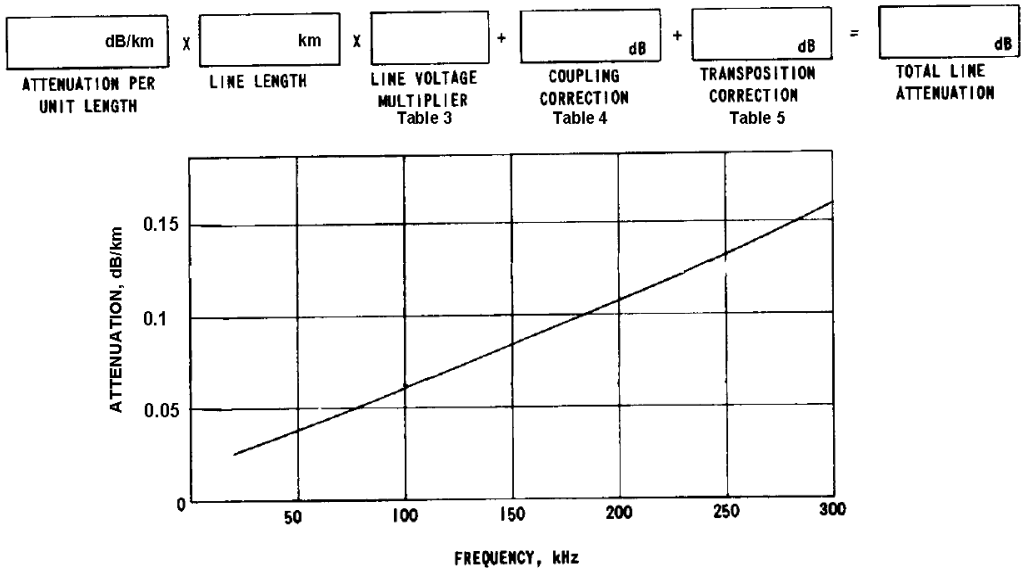

Figure 11—Line attenuation graph for graphical method

Table 3—Line-voltage multipliers

Line voltage (kV)	Fair weather	Adverse weather[a]
34.5	1.46	2.19
69	1.20	1.80
115	1.11	1.66
138	1.00	1.50
230	0.78	0.98
345	0.72	0.90
500	0.54	0.68
765	0.50	0.63

[a]Under certain severe frost conditions, extreme losses can occur.

Copyright © 2005 IEEE. All rights reserved.

Copyright The Institute of Electrical and Electronics Engineers, Inc.
Provided by IHS under license with IEEE
No reproduction or networking permitted without license from IHS
Not for Resale

Table 4—Coupling correction factors

Type of coupling/shield wires	Correction (dB)		
	<8 km[a]	>80 km[a]	>240 km[a]
Mode 1 coupling	0	–2	-
Center to phase to outer phase	0	0	-
Center phase-to-ground			
Al or Cu wire	0	1	-
Steel wire	1	4	-
No shield wire[b]	8	8	-
Outer phase-to-ground			
Al or Cu wire	0	-	13
Steel wire	1	-	15
No shield wire[b]	19	-	19

[a]Linear interpolation should be used to determine loss between limits of line length.
[b]Subject to wide variations.

Table 5—Transposition corrections[a]

Transposition	Correction (dB)	
	<16 km[b]	>160 km[b]
1	0	6
2–4	0	8
5 or more	0	10

[a]Apply for 345 kV and higher.
[b]Linear interpolation should be used to determine loss between limits of line length.

The analysis allows for three current modes to be propagated down the line. These consist of a low-loss mode, a medium loss mode, and a high loss mode. Mode 1 is the low-loss mode and consists of currents of equal magnitude flowing in an outward direction in the outside phase wires and a current of twice this magnitude flowing inward in the center phase wire. The medium loss mode is Mode 2 and has two currents of equal magnitude but of opposite phase flowing in the outer phase wires. The loss in this mode is one tenth of the high loss mode. Mode 3 is the high loss mode with currents of equal magnitude flowing outward in all three phase wires and returning through the ground. This mode quickly dissipates because of the loss in the ground. The typical losses of these modes are shown in Figure 12.

Copyright © 2005 IEEE. All rights reserved.
Copyright The Institute of Electrical and Electronics Engineers, Inc.
Provided by IHS under license with IEEE
No reproduction or networking permitted without license from IHS
Not for Resale

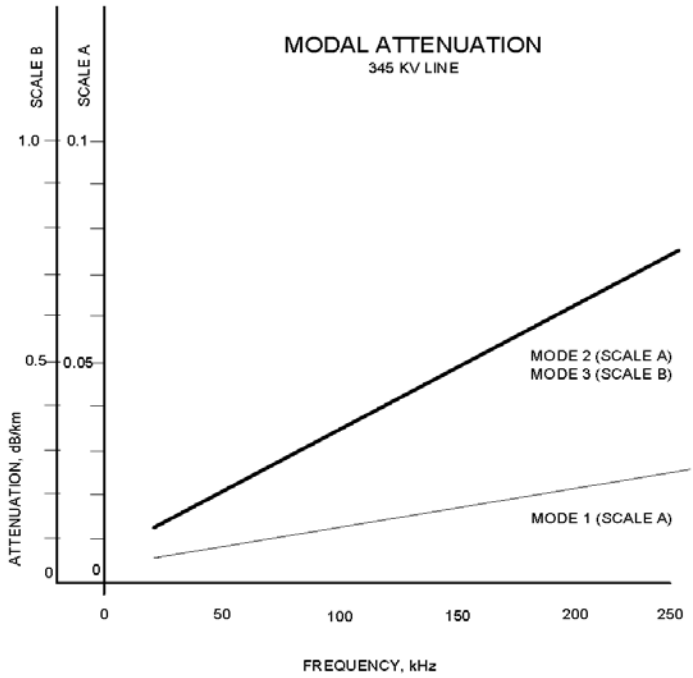

Figure 12—Typical losses of Mode 1, Mode 2, and Mode 3

The details of the simplified modal analysis are given in Sanders and Ray [B156] and the *Relaying Communications Channels Application Guide* [B151]. The currents injected into the power line by the coupling circuit are distributed into the three assumed modes. A center phase-to-ground coupling will generate Mode 1 and Mode 3 components, of which two thirds of the power is in the low-loss mode 1 component. A center phase to outer phase coupling will result in Mode 2 and Mode 1 components only. One fourth of the power is in the medium loss Mode 2 components, whereas three quarters of the power resides in the low-loss Mode 1 components. Coupling to an outside phase results in all three modes being created with one third of the power in Mode 3, one half in Mode 2, and only one sixth in Mode 1. This power distribution shows a comparison of the losses expected for these types of coupling. Coupling to all three phases will give only a Mode 1 distribution in a line with no transpositions. If the coupling is only to the outside phase wires, only Mode 2 will be created on an untransposed line. To some extent, this explains the high line losses for dual outer phase coupling. These coupling schemes are described in more detail in 5.8.

The behavior of the modal currents at a transposition considers the magnitude and direction of the currents after these currents have been attenuated by the line up to the transposition. The currents essentially redistribute according to the relations for this analysis. All three modes are usually present after a transposition because currents are usually present in all three phase wires. The high loss mode will be quickly dissipated, and only Mode 1 and Mode 2 will remain at the next transposition.

At the end of the line, although there are currents in all three phase wires, useful power can only be extracted on the phase wires actually coupled. The concept of conversion is used to measure the efficiency of different coupling schemes. This relates to the ratio of the amount of power into the line to the Mode 1 power out of the line.

Copyright © 2005 IEEE. All rights reserved.

Copyright The Institute of Electrical and Electronics Engineers, Inc.
Provided by IHS under license with IEEE
No reproduction or networking permitted without license from IHS
Not for Resale

5.3.3.1 Simplified modal analysis calculations

5.3.3.1.1 Description

The following relation gives the propagation of electromagnetic energy on a single-conductor line, provided no reflections exist:

$$V_\chi = V_S \varepsilon^{-\gamma\chi} \tag{10}$$

$$I_\chi = \frac{V_\chi}{Z_0} \tag{11}$$

where

V_S is the sending-end voltage

Z_0 is the characteristic impedance

x is the distance from sending end, in kilometers

V_x, I_x is the voltage and current at distance x from sending end

y is the propagation constant

The propagation constant is composed of two quantities

$$\gamma = \alpha + j\beta \tag{12}$$

where α is an attenuation constant in nepers per kilometer and β is a phase constant in radians per kilometer (1 neper = 8.686 dB.) The propagation constant is dependent on the physical properties of the conductor used plus its geometry with respect to ground.

It has been observed that if carrier energy is applied to a single conductor of a multiconductor line, then the propagation along the line does not follow Equation (12). Instead, the propagation of energy on the line depends on the number of conductors and usually involves all of them. Analysis of a multiconductor line shows that several modes of energy propagation may take place simultaneously. It can also be shown that the number of natural modes of propagation on a multiconductor line is equal to the number of conductors involved in the propagation of energy. The analysis of the multiconductor line is accomplished using a matrix equation

$$[V] = [V_S]\varepsilon^{-[\gamma_m]\chi} \tag{13}$$

where m is an arbitrary integer to identify the modes. The solution of the Equation (13) will yield the voltage and current relationship of the modes. Each mode has its propagation constant and characteristic impedance, and each mode propagates in a manner that is independent of the other modes. The voltage and current at any location on any one conductor is the vector sum of the individual mode voltages and currents existing on that conductor at the particular distance x from the transmitter.

The remainder of the discussion will deal with the specific case of a single-circuit three-phase line of flat construction. This is a common type of construction for EHV circuits as well as for many lower voltage transmission lines. A typical example is shown in Figure 13. The assumption is also made that the shield wires are grounded at each tower and are at constant potential along their length. Thus, they do not generate any transmission modes. Based on this assumption, there are three natural modes of propagation, which will be labeled Mode 1, Mode 2, and Mode 3. Each mode has its propagation constant (γ_1, γ_2, and γ_3) and characteristic impedance (Z_{01}, Z_{02}, and Z_{03}). Other transmission-line configurations, such as vertical or

Copyright © 2005 IEEE. All rights reserved.
Copyright The Institute of Electrical and Electronics Engineers, Inc.
Provided by IHS under license with IEEE
No reproduction or networking permitted without license from IHS
Not for Resale

triangular ac lines, dc lines, or power cables, will each have its set of modal parameters. The modal properties described in the following paragraphs are not appropriate for any except the general arrangement shown in Figure 13.

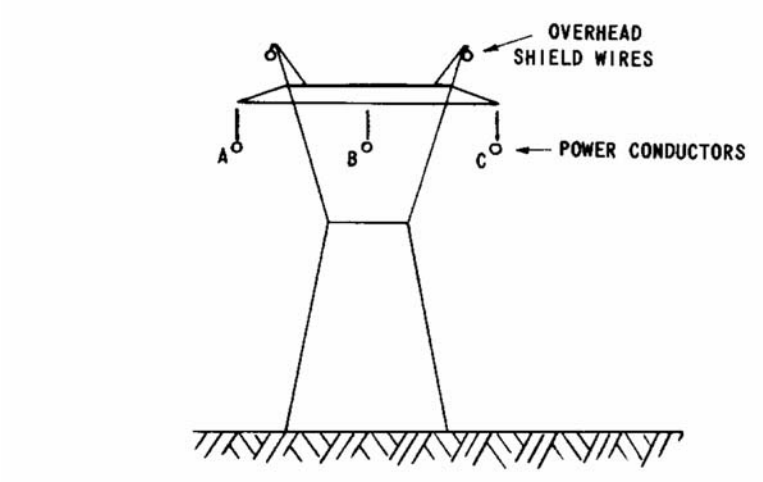

Figure 13—Typical single-circuit line construction

Mode 1[6] is the least attenuated of the three modes and makes long-distance carrier communications possible. It nominally has current flowing out the two outer phases and returning via the center phase. Mode 1 attenuation is not only low, but it is also reasonably independent of frequency throughout the PLC range.

Mode 2 has its current flowing out on one outside phase and returning on the other outside phase. No Mode 2 current exists in the center phase. Mode 2 losses are greater than those of Mode 1, and its losses are more dependent on frequency.

Mode 3 propagates current almost equally on all three phases and has a ground return. This mode has such a high rate of attenuation that it may be neglected beyond a short distance (approximately 16 km) from the transmitter.

The vector relationships of modal currents (or voltages) in the three phase conductors are shown in Figure 14. Current (and voltage) distributions among the phase conductors are given in Table 6. These quantities are normalized to the phase A quantities. The factors *p* and *q* depend on the line under study. The factor *p* can range from about –1.6 to –2.0, and *q* will have a range of about 1.1 to 1.3.

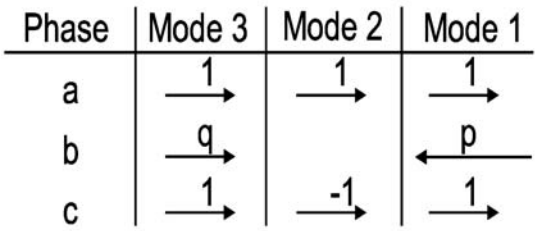

Figure 14—Modal vector relationships

[6]In some literature the lowest loss mode has been identified as Mode 3. The definition given here, which identifies Mode 1 as the lowest loss mode, is in agreement with earlier IEEE publications and with current practice in most parts of the world.

Copyright © 2005 IEEE. All rights reserved.

Copyright The Institute of Electrical and Electronics Engineers, Inc.
Provided by IHS under license with IEEE
No reproduction or networking permitted without license from IHS
Not for Resale

Table 6—Phase distribution of modal current and voltage

Phase	Mode 1	Mode 2	Mode 3
A	1	1	1
B	p	0	q
C	1	–1	1

As stated before, each mode has an independent propagation constant. Based on several examples of experimental data taken for lines from 345 kV to 765 kV, the general range for the values of attenuation and the relative phase velocity (which is dependent on the phase constant β) are shown in Table 7 and Figure 12.

Table 7—Attenuation and relative phase velocity for Mode 1, Mode 2, and Mode 3

Quantity	Mode 1	Mode 2	Mode 3
Attenuation (dB/km)			
At 30 kHz	0.006–0.0018	0.0054–0.06	
At 100 kHz			0.9–1.8
At 300 kHz	0.042–0.054	0.24–0.3	
Relative phase velocity	1.0	0.98–0.995	0.9

The attenuation constant ranges for Mode 1 and Mode 2 are given for frequencies of 30 kHz and 300 kHz. The attenuation can be expected to vary in almost a linear fashion between these two frequencies. The phase constant is represented for the relative propagation velocity with respect to the velocity of Mode 1, which is nearly the speed of light in free space.

These general ranges can be used to calculate line attenuation, keeping in mind that the modal quantities add vectorally to produce the phase quantities.

5.3.3.1.2 Coupling to the power line

When a carrier transmitter is coupled to the power line, it is usually done using single-phase-to-ground or a form of phase-to-phase coupling. All of the generally used methods of coupling generate different portions of Mode 1, Mode 2, and Mode 3 power. Because Mode 1 is the least attenuated, then it is desirable to generate as much Mode 1 as possible.

At the coupling terminal, the phase voltages and currents are set by the coupling configuration and are known. The mode currents generated must satisfy these boundary conditions. They can be calculated by solving

$$I_a = I_{a1} + I_{a2} + I_{a3} \quad (14)$$

$$I_b = pI_{a1} + qI_{a3} \quad (15)$$

$$I_c = I_{a1} - I_{a2} + V_{a3} \quad (16)$$

Copyright © 2005 IEEE. All rights reserved.
Copyright The Institute of Electrical and Electronics Engineers, Inc.
Provided by IHS under license with IEEE
No reproduction or networking permitted without license from IHS
Not for Resale

If voltages are used, V is substituted for I in Equation (14), Equation (15), and Equation (16).

When the magnitudes of I_{a1}, I_{a2}, and I_{a3} have been calculated, the modal power at the transmitter can be found. P_T is equal to the total transmitter power less the losses in the coupling equipment

$$P_T = P_1 + P_2 + P_3 \tag{17}$$

where P_1, P_2, and P_3 are the powers of Mode 1, Mode 2, and Mode 3, respectively

$$P_1 = \frac{(1 + p^2 + 1)I_{a1}^2}{Z_{01}} \tag{18}$$

$$P_2 = \frac{2I_{a2}^2}{Z_{02}} \tag{19}$$

$$P_3 = \frac{(1 + q^2 + 1)I_{a3}^2}{Z_{03}} \tag{20}$$

Now that the modal powers are known, the modal coupling efficiency can be calculated as

$$\eta_1 = \frac{P_1}{P_T} \tag{21}$$

$$\eta_2 = \frac{P_2}{P_T} \tag{22}$$

$$\eta_3 = \frac{P_3}{P_T} \tag{23}$$

where η_1, η_2, and η_3 are the modal coupling efficiencies. It is desirable to make η_1 as close to unity as possible and η_2 and η_3 as close to zero as possible. The loss of transmitter power to Mode 2 and Mode 3, in decibels, is

$$\alpha_1 = -10\log\eta_1 \tag{24}$$

This loss may or may not be a real loss to the receiver, depending on the line length. Table 8 lists values of α_1, as conversion losses for several common coupling methods. The table is based on the assumption that the line is sufficiently long that the received power in Mode 2 and Mode 3 is negligible compared with the power in Mode 1. Refer to 5.2 for practical guidelines.

The modal coupling efficiency is often expressed in decibels and means the same as the modal conversion loss, except that the sign is reversed. For example, center-phase-to-ground coupling, which has a modal conversion loss of 1.8 dB, is said to have a coupling efficiency of –1.8 dB.

--`,,`,`,,`,-`-`,,`,,`,`,,`---
Copyright © 2005 IEEE. All rights reserved.

Copyright The Institute of Electrical and Electronics Engineers, Inc.
Provided by IHS under license with IEEE
No reproduction or networking permitted without license from IHS
Not for Resale

Table 8—Mode 1 single-end conversion losses

Type of coupling	Conversion loss (dB)
Mode 1	0.0
Center phase to outer phase (conductors driven electrically out of phase)	1.2
Center phase to ground	1.8
Outer phase to ground	7.0
Double phase to ground (two outer conductors driven electrically in phase)	4.8

A representation of how the method of coupling affects the solution of modal analysis is illustrated in Figure 15.

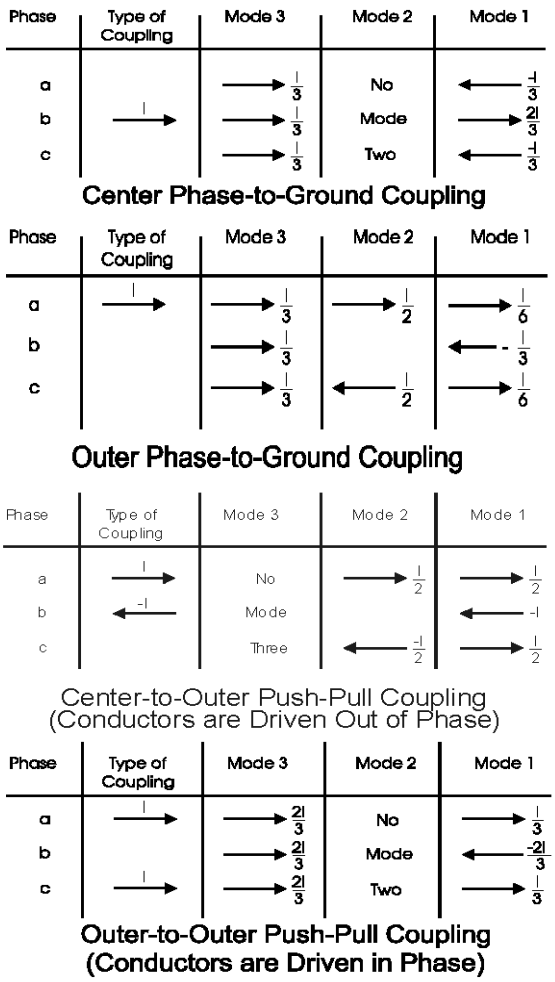

Figure 15—Modal distribution for different coupling methods

Copyright © 2005 IEEE. All rights reserved.
Copyright The Institute of Electrical and Electronics Engineers, Inc.
Provided by IHS under license with IEEE
No reproduction or networking permitted without license from IHS
Not for Resale

5.3.3.1.3 Transpositions in the line

On a long transmission line of flat construction, the 60 Hz impedance between phases is unbalanced. To aid in the removal of unbalanced currents, transpositions are placed at strategic points along the line. These transpositions affect not only power frequencies but also carrier frequencies. At carrier frequencies, transpositions are assumed to be transparent; that is, they do not reflect any incident RF energy. They do, however, act as mode converters. The value of the modal quantities at the input of the transposition will be different from the modal quantities at the output. As an example, even if only Mode 1 signals are present at the input of the transposition, all three modes of propagation are present at the output. Most output energy will be in Mode 1 and Mode 2. However, the Mode 1 quantity at the output is 6 dB below its input value. If the generated Mode 2 signal is completely attenuated before reaching the receiver or the next transposition, then 6 dB is the loss represented by the transposition. The figure of 6 dB loss is a maximum, and this simple example does not usually hold in practice, because quantities other than Mode 1 are usually present at the input to the transposition, and the generated Mode 2 is not completely attenuated by the time the receiver is reached. The exact procedure for handling transpositions in attenuation calculations is as follows:

a) Calculate the modal quantities at the input to the transposition, both phase and magnitude.

b) Add the modal quantities vectorally to get phase quantities.

c) Transpose the phase quantities per line transposition.

d) Reconvert phase quantities into modal quantities, and continue to the receiving end or next transposition. The conversion to modes is the same method as that described for coupling conversion in Equation (14), Equation (15), and Equation (16).

Figure 16 illustrates the modal conversion created during a transposition.

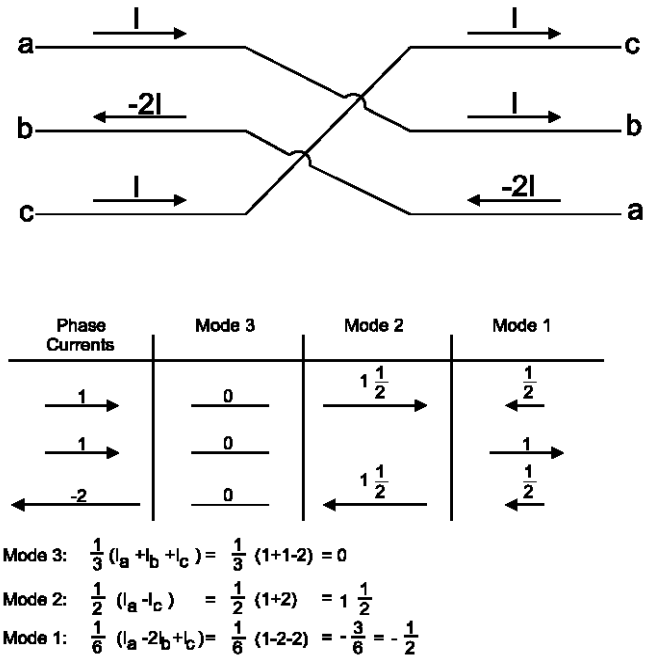

Figure 16—Modal conversion at transposition

Copyright © 2005 IEEE. All rights reserved.

Copyright The Institute of Electrical and Electronics Engineers, Inc.
Provided by IHS under license with IEEE
No reproduction or networking permitted without license from IHS
Not for Resale

5.3.3.1.4 Receiving terminal

At the receiving terminal, the modal components are converted into phase voltages and currents. These voltages and currents then become the received signals, provided the line is properly terminated. Proper termination for all modes of propagation would require a network of six impedances (see Figure 7). In most examples of actual practice, each coupled phase is terminated with an impedance to ground. As a result, some reflections will occur, but these usually do not significantly degrade the desired signals.

The conversion factors listed in Table 4 are the result of many calculations on lines of different lengths, with or without transpositions, compared with actual measured losses. There are instances, especially when coupling to outside phase wires on horizontally constructed lines, where a physical analysis will give the only correct estimate of the actual line losses across a band of frequencies. The results for most simplified analysis calculations are conservative.

5.3.4 Physical modal analysis

The most accurate modal analysis is the physical analysis, which considers all of the variables present in the line being evaluated. Modal analysis states that there are as many modes as the number of conductors or paths in the system. A typical HV line with three phase wires and two insulated overhead static wires would have five modes because of the conductors and two related to the ground conductivity. Twin circuits will cause other modes to be established. Coupling to circuits on the same right-of-way can be studied by including the parameters of this circuit in the data. The parameters of phase and ground wire conductors are available in several sources.

5.4 Noise

5.4.1 Impulse and random noise

The performance of a relaying channel, as noted earlier, depends essentially on the SNR at the receiving end. The noise on the power line limits the amount of attenuation that a PLC channel can tolerate. Figure 17 and Figure 18 give typical values of average (random) and impulse noise on power lines, respectively. The noise levels in Figure 17 are typical average noise levels in a 3 kHz bandwidth at a 50 Ω impedance level. In Figure 17 and Figure 18, it is estimated that values given for adverse weather are not exceeded more than 1% of the time and those for fair weather not more than 25% of the time.

Figure 18, on the other hand, shows impulse noise levels over the nominal carrier frequency band. See Castro et al. [B48] for more information.

5.4.2 Noise measurements

Noise measurements have been classified according to the responses of various measuring instrument detectors to different noise characteristics. These distinctions are useful because of their different effects on various kinds of carrier receivers.

The peak value of power-line noise is the maximum voltage amplitude of recurring impulses. It is these impulses, for example, that effect trigger circuits such as are found in electronic switching devices.

Copyright © 2005 IEEE. All rights reserved.
Copyright The Institute of Electrical and Electronics Engineers, Inc.
Provided by IHS under license with IEEE
No reproduction or networking permitted without license from IHS
Not for Resale

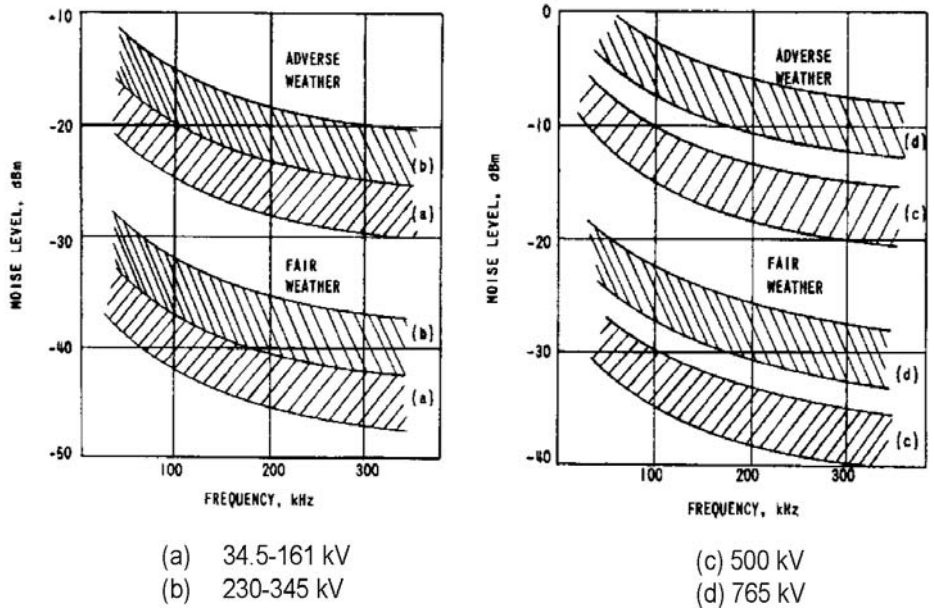

Figure 17—Range of transmission line noise levels (3 kHz bandwidth)

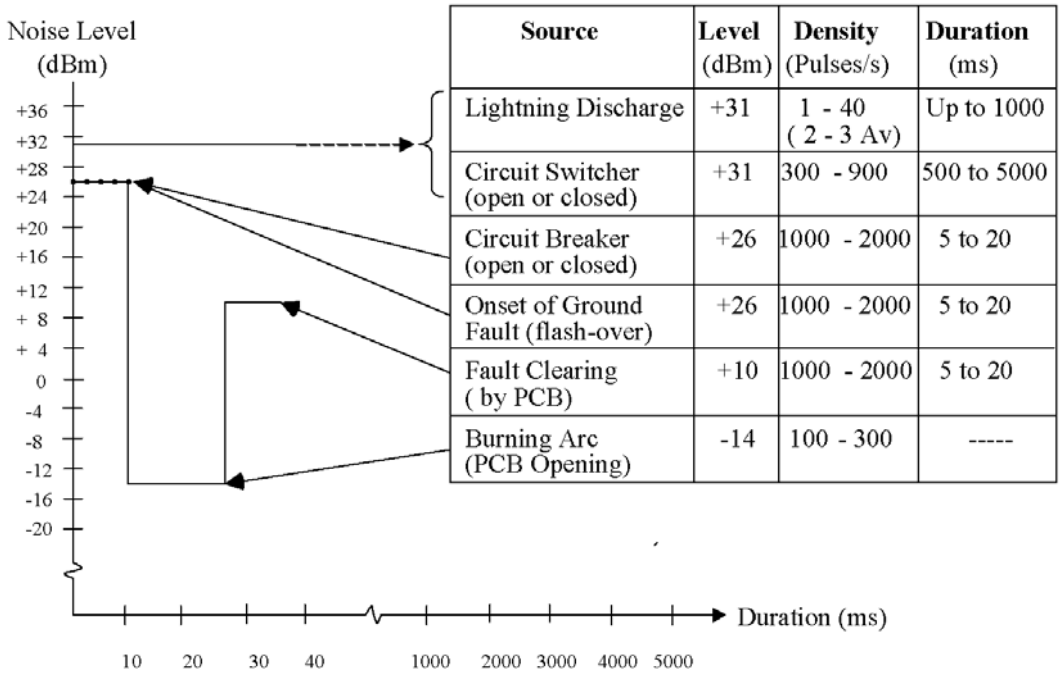

Source	Level (dBm)	Density (Pulses/s)	Duration (ms)
Lightning Discharge	+31	1 - 40 (2 - 3 Av)	Up to 1000
Circuit Switcher (open or closed)	+31	300 - 900	500 to 5000
Circuit Breaker (open or closed)	+26	1000 - 2000	5 to 20
Onset of Ground Fault (flash-over)	+26	1000 - 2000	5 to 20
Fault Clearing (by PCB)	+10	1000 - 2000	5 to 20
Burning Arc (PCB Opening)	-14	100 - 300	-----

Figure 18—Typical average impulse noise levels on power lines (4 kHz bandwidth)

Copyright © 2005 IEEE. All rights reserved.

Copyright The Institute of Electrical and Electronics Engineers, Inc.
Provided by IHS under license with IEEE
No reproduction or networking permitted without license from IHS
Not for Resale

The quasi-peak value of noise is a reference level related to peak amplitude and to impulse repetition rate. It is measured by a detector circuit with a fast charging time and a relatively slow discharge time (typically 1 ms and 600 ms, respectively; see ANSI C63.2]. For pulses occurring at high repetition rates, the quasi-peak value approaches the peak value. Quasi-peak noise is a measure of the masking effect of noise as a background for speech. The average value of noise is its average voltage over a finite period of time. It is defined as the area under the amplitude-time curve divided by the base length (time period). Average noise affects receiver-detector dc output for telegraph functions, for continuous wave relaying, or for ON–OFF pulse functions.

The RMS value of noise is the effective voltage of a reference sine wave that would have the same average power level as the noise being measured. RMS noise is of secondary importance in carrier equipment.

Peak values of noise may be measured by certain peak-reading voltmeters. So-called memory voltmeters can retain the peak reading of the highest amplitude impulse (lasting 1 μs or longer) occurring during any arbitrary measuring period. Peak values of noise may also be measured by using a cathode ray oscilloscope; however, this usually takes a fairly elaborate setup, including photographic equipment. Quasi-peak values may be measured only by noise meters that have appropriate detector characteristics. Although used extensively for measurements of noise affecting radio broadcast, quasi-peak measurements have not been used to any great extent in carrier applications. Average values of noise may be measured by selective carrier-frequency voltmeters of known bandwidth. Also, average noise can be derived from audio noise measurements made at the output of a single-sideband carrier receiver. Because noise energy is distributed throughout the frequency spectrum, measured values will be a function of the bandwidth of the measuring instrument. As might be expected, changing the bandwidth influences peak and quasi-peak readings more than average and RMS readings. Measured peak and quasi-peak values would be lowered by approximately 6 dB if the bandwidth was reduced by 2:1. The measured values of average and RMS noise would be lowered by 3 dB under the same conditions.

Measured power-line noise often displays erratic frequency characteristics or severe standing wave patterns. The noise level on a power line is determined by both generation and propagation of noise energy. Propagation phenomena, such as attenuation, reflections, and absorptions, affect noise voltages in the same way they affect desired carrier signals.

The amplitude of power-line noise decreases with increasing frequency. A rule of thumb (very popular in the past) is that the noise amplitude varies inversely as the frequency. This would mean that the noise level drops 6 dB each time the frequency is doubled. Recent investigations have clarified that the amplitude-frequency curve is not as steep as this rule would indicate.

5.4.3 HVDC converter noise

The construction of ac to dc to ac converters and the building of HVDC transmission lines has presented new noise concerns for utilities whose ac lines are connected to these systems, and to those lines crossing or in parallel with dc lines. The noise caused by the valves in the conversion process from dc to ac is frequency dependent. The noise levels are very high at the low end of the PLC frequency band and follow an approximate 1/f characteristic to 100 kHz. The noise conducted from the converter onto the ac system requires noise filtering in the PLC frequency range to reduce this noise to acceptable levels.

High currents may exist in the frequency band from a few kilohertz to 30 kHz, which are not usually treated by the filtering at the converter. These currents can be coupled into PLC circuits. The drain coils in the coupling capacitors are designed to shunt power frequency current to ground and are designed for a maximum current. The addition of other frequency components that cause resonance, between the coupling capacitor and the drain coil, can cause saturation of drain coils using magnetic cores. The saturation of the cores results in the generation of harmonics of frequencies present in the drain coil. Many of these harmonics are in the PLC band and can generate interference for PLC channels used on the line. Drain coils with no magnetic cores do not saturate, and no frequencies in the PLC band are generated.

--`,,`,`,,`-`-`,,`,,`,`,,`---

 Copyright © 2005 IEEE. All rights reserved.

Copyright The Institute of Electrical and Electronics Engineers, Inc.
Provided by IHS under license with IEEE
No reproduction or networking permitted without license from IHS Not for Resale

Applying PLC to dc lines is a subject requiring careful analysis. Several projects have successfully solved the problems involved.

Radiated noise from the conversion process is best reduced by filtering as close to the source as possible.

5.4.4 Series compensated lines

Series capacitors are added to EHV power transmission lines to increase the power transfer capacities of long lines. The series capacitors may be installed at a station between the line traps and the station bus, or even in the middle of the line. When placed in a location outside the PLC signal path, the RF signals do not pass through the capacitors. PLC RF signals traverse the capacitors in the line side without significant loss.

The noise generated by the switching of the capacitors, which is required to prevent damage to the units and during ordinary maintenance, is equivalent to faults or arcing disconnect noise on uncompensated lines. This noise will travel down the conductors and be evident at distant stations. Because the duration of the noise is generally less than several seconds, it is not of concern to uncompensated line sections distant from the source. PLC installation on series compensated lines usually require Mode 1 coupling and high transmitted signal levels to ensure high receive levels and adequate margin. Special surge protection is required to protect equipment coupled to these lines.

5.5 Power cable circuits

5.5.1 Types of power cable circuit

The two power cable types generally used in underground applications are single-conductor, self-contained cables and single- or three-conductor pipe-type cables (see Comerford [B56]). It should be noted that experimental work is being done on cryogenic cables, but they are not yet being applied. Single-conductor, self-contained cables use a hollow oil-filled conductor and an oil-impregnated paper insulation. An extruded metallic shield encases the insulation. The pipe-type cable uses a solid conductor with oil-impregnated paper insulation that is wrapped with synthetic tape layers and thin metallic tapes. One or three conductors are housed in a pipe that is filled with high-pressure oil (or gas). In some applications, the fluid is pumped through the pipe to provide a more uniform temperature distribution and cooled to remove heat from the cable.

5.5.2 Skid wires

Protective skid wires are spiraled around the conductor or conductors to protect them during insertion into a pipe or duct. The resistivity of the skid wire affects carrier signal attenuation somewhat. The skid wires are the return path for the carrier signal in phase-to-ground coupling. Generally, the skid wires in use today are made from copper, zinc, or stainless steel. Although copper has a low resistivity and stainless steel has a high resistivity, tests show that the resistivity of the skid wire is not a major factor in carrier signal loss. Today, cost more than anything determines which metal is used.

Copyright © 2005 IEEE. All rights reserved.

Copyright The Institute of Electrical and Electronics Engineers, Inc.
Provided by IHS under license with IEEE
No reproduction or networking permitted without license from IHS
Not for Resale

5.5.3 Losses—attenuation

Carrier propagation losses per unit length in a power cable are substantially larger than those experienced with overhead phase wires. The specific loss encountered with a particular cable depends on its construction and the method of coupling. Individual power cable manufacturers may supply attenuation and characteristic impedance information. Representative values of attenuation on a power cable are shown in Figure 8 for a single-phase-to-ground input. Mutual coupling between phases in a three-conductor pipe-type power cable varies with frequency. At lower frequencies, attenuation with interphase coupling is substantially lower than with phase-to-ground coupling.

Line losses in oil-filled pipe-type cables range from about 1 dB/km to 1.5 dB/km at 30 kHz and from 10 dB/km to 3 dB/km at 70 kHz. Power cable circuits that exceed about 16 km in length will generally require transmitter equipment with a power output of 100 W.

5.5.4 Surge impedance

The values of the characteristic impedance of power cables vary greatly from those for overhead lines, and there is a large variation among different types of cables. In general, there has not been much information published on power cables, such as the high-frequency characteristic impedance, and it may be required to perform measurements on the actual cable used for a particular circuit. Generally the characteristic impedance of a power cable will be between 10 Ω and 60 Ω. The surge or characteristic impedance of a pipe-type cable can be measured by the applied voltage and current for both open-circuit and short-circuit conditions and by substituting the valves in Equation (25):

$$Z_0 = \sqrt{\frac{E_{OC}}{I_{OC}} \times \frac{E_{SC}}{I_{SC}}} \tag{25}$$

where

E_{oc} is the open-circuit voltage
E_{sc} is the short-circuit voltage
I_{oc} is the open-circuit current
I_{sc} is the short-circuit current

5.6 Overhead line/cable circuits

5.6.1 Mismatch loss (attenuation at discontinuities)

When a relatively short line is terminated in a load that is different from its characteristic impedance, the variation in line input impedance from reflected energy can cause a transmitter to operate inefficiently. The effects of wide variations in input impedance can be minimized by a proper selection of frequencies provided that the distance to the mismatch and the magnitude of the mismatch termination are known. Any change in the line could lead to an input impedance change, however. In some cases, a mismatch can be overcome by adjustment of the line tuner and changing the impedance–transformer ratio. Where a mismatch point is isolated from the input end of a line by substantial line loss, there is little change in input impedance from reflected energy, and the only additional loss is from the energy reflected from the mismatch.

The loss from an impedance discontinuity between a line of characteristic impedance Z_0 and a load impedance Z_1 is given in decibels by

$$dB_{LOSS} = 20\log\left[\frac{Z_0 + Z_1}{2\sqrt{Z_0 Z_1}}\right] \tag{26}$$

Copyright © 2005 IEEE. All rights reserved.
Copyright The Institute of Electrical and Electronics Engineers, Inc.
Provided by IHS under license with IEEE
No reproduction or networking permitted without license from IHS
Not for Resale

Sometimes a tap line is connected to the existing power line between two stations. If the line is short (low loss), its behavior as a stub at all carrier frequencies on the line should be investigated. If the stub is terminated in a high impedance and its length is equal to an odd number of quarter-wavelengths at the carrier frequency, a low impedance will be reflected across the main line at the junction. For example, if the stub length is one quarter-wavelength at a given carrier frequency and the end of the stub is terminated in an open circuit, a short-circuit impedance will be reflected across the main line, which will result in an essentially infinite loss to the carrier-frequency signal on the line. Similarly, if a short stub is terminated in a low impedance at a carrier frequency and its length is an even number of quarter-wavelengths at that frequency, a low impedance will again be reflected across the junction.

If a high loss is present on a line because of a stub, the situation may be eliminated by changing the carrier frequency. However, this cannot always be done, and the most effective method for minimizing a problem with a stub is usually to install a line trap at the input to the stub line.

5.6.2 Attenuation in combined overhead line and cable

When an overhead line connects directly to a power cable, a substantial impedance mismatch occurs., which causes signal attenuation from energy reflection. Typically, the overhead line might have a characteristic impedance of 300 Ω (phase-to-ground), and the power cable might have a characteristic impedance of 20 Ω, which results in an impedance mismatch ratio of 15:1. This ratio is found to result in a 6.3 dB mismatch loss (Figure 19).

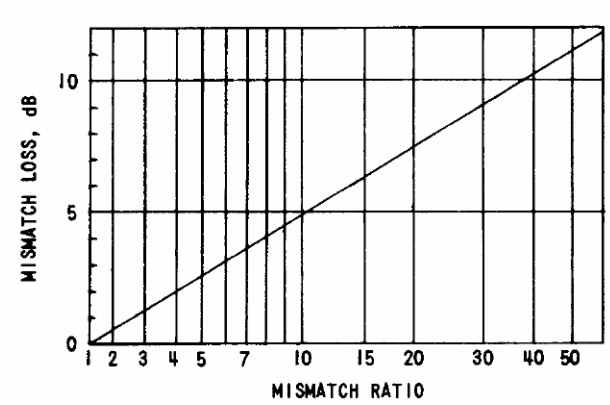

Figure 19—Mismatch losses vs. mismatch ratio

As discussed in 5.6.1, the input impedance to the overhead line may vary substantially from its characteristic impedance if a mismatch is present and the overhead line has low attenuation. Particularly bad situations occur in which overhead line lengths are multiples of one quarter-wavelength at the carrier frequency. This result can readily be seen for the case of a quarter-wavelength line segment, because it acts as an impedance transformer in which the input impedance Z_{IN} is defined by (for a lossless line)

$$Z_{IN} = \frac{Z_0^2}{R} \tag{27}$$

where Z_0 is the characteristic impedance and R is the load. For Z_0 = 300 Ω and R = 20 Ω, Z_{IN} = 4500 Ω, which is very high compared with the 300 Ω characteristic impedance. A half-wavelength line segment is equivalent to two quarter-wavelength segments back to back, and the input impedance to the overhead line would equal the load resistance of 20 Ω, which is very low compared with 300 Ω. Other multiples of one quarter-wavelength result in either a high- or a low-input impedance.

Copyright © 2005 IEEE. All rights reserved.

Copyright The Institute of Electrical and Electronics Engineers, Inc.
Provided by IHS under license with IEEE
No reproduction or networking permitted without license from IHS
Not for Resale

Figure 19 is a graph of the mismatch loss as a function of the in-phase impedance ratio. Mismatch losses also occur when a phase angle is associated with the mismatch ratio. For this reason, mismatch losses from wide variations in the input impedance to the overhead line cannot be directly avoided, even by using frequencies that result in an odd number of one-eighth-wavelengths over the line length, because the lower mismatch ratio assumes a complex nature. However, for these in-between frequencies, the resistive component of input impedance is usually within the range of adjustment of the impedance-matching transformer, and the reactive component can be offset by adjustment of the line tuner. Fairly efficient operation within a limited bandwidth is possible. The harmful effect of reflections on the input impedance to an overhead line is greatly reduced if the line loss exceeds 5 dB.

The input impedance to the cable end of a combined system is also sensitive to the impedance mismatch at the junction of the cable and overhead line. Frequencies for which the power cable length corresponds to an odd multiple of an eighth-wavelength are to be preferred over those for which the length is any multiple of a quarter-wavelength. As with the overhead line, the effect of reflections can usually be neglected for cables having more than 5 dB attenuation.

Although the effect of reflected energy on the input impedances to the overhead line and the power cable can be minimized by careful frequency selection and compromise adjustments of line-tuning equipment at both ends, the current application trend is to provide line trap isolation for the carrier circuit between the overhead line and the power cable. Coupling capacitors, line tuners, and impedance-matching transformers can then be used to provide the proper impedance to both the overhead line and the cable, and mismatch loss as well as frequency selection problems can be eliminated.

5.6.3 Bypass losses

PLC systems frequently require the bypassing of signals around a discontinuity, such as an open-circuit breaker, a transformer, lines of different voltages, or an impedance mismatch such as an open wire-cable circuit. A bypass may involve the transfer of energy for a single channel, or it may involve the transfer of a wide band of carrier frequencies. Bypassing can be accomplished using line tuning networks between the base leads of coupling capacitors connected to the line at each end of the discontinuity involved. Where the coupling capacitors are separated by less than about 30 m, the tuning arrangement can be handled as a short bypass. In this case, less equipment is required than for the long bypass, which is required where greater separations are involved.

It is common practice by most users to install line traps on both sides of the discontinuity to be bypassed to minimize unnecessary shunt losses.

5.6.3.1 Short bypasses

In applications involving a short bypass, a simplified arrangement with one line tuner and high-impedance lead-in wire can be used. The high-impedance wire should be kept as short as practical to minimize carrier losses.

A typical short bypass using a single-frequency tuner is shown in Figure 20, and Figure 21 is an example of a bandpass short bypass. Two sets of protective elements (not shown) are included, one associated with each coupling capacitor lead. There are no impedance-matching transformers.

5.6.3.2 Long bypasses

The most commonly used long bypass arrangement is shown in Figure 22, in which a normal line tuner is associated with each coupling capacitor and a coaxial cable is used as the link between them. With this arrangement, the distance between the coupling capacitors can be as much as several hundred meters, depending on the losses in the coaxial cable at the frequency involved.

Copyright © 2005 IEEE. All rights reserved.
Copyright The Institute of Electrical and Electronics Engineers, Inc.
Provided by IHS under license with IEEE
No reproduction or networking permitted without license from IHS
Not for Resale

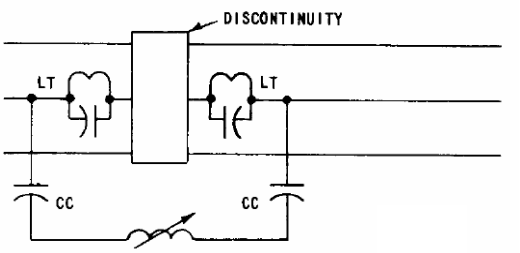

Figure 20—Typical single-frequency short bypass

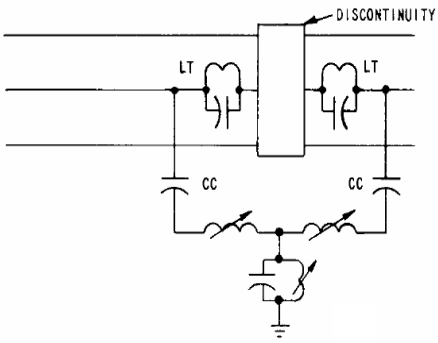

Figure 21—Typical bandpass short bypass

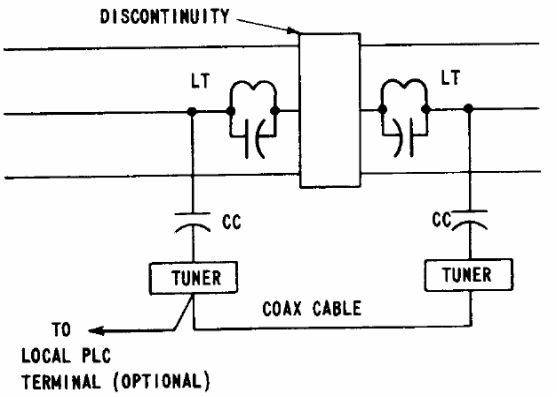

Figure 22—Typical long bypass circuit

If a carrier transmitter or receiver terminal is to be coupled into the power line at the bypass point, a coaxial cable can be run from either tuner back to the equipment. This process will allow signals to be coupled to or from the lines. In some installations, a separate coaxial cable is run from each tuner to the local terminal, and the direct bypass cable is omitted. In either case, a 2:1 impedance mismatch will be present.

5.7 Cross-station attenuation

5.7.1 Carrier runaround

Unintentional propagation of carrier-frequency signals through or around a power station (sometimes called carrier runaround) is an undesirable but inevitable phenomenon that takes place wherever PLC is applied. The reduction in magnitude of these signals as they pass through a station is called cross-station attenuation. Because of the importance of minimizing random propagation of interfering signals, a high value of (on the order of 55 dB) cross-station attenuation is very desirable. It is also desirable for more specific reasons such as the application of carrier-frequency bypasses.

Copyright © 2005 IEEE. All rights reserved.

Copyright The Institute of Electrical and Electronics Engineers, Inc.
Provided by IHS under license with IEEE
No reproduction or networking permitted without license from IHS
Not for Resale

5.7.2 Cross-coupling mechanisms

5.7.2.1 General

Cross coupling of carrier signals through a station takes place through a network consisting of series-connected line traps and the shunting impedance of the power bus. A substantial amount of carrier energy also passes through untrapped phases of the power line on which the carrier signal is applied. Another path frequently exists by virtue of the mutual coupling between parallel lines entering a station.

5.7.2.2 Line trap network

The passage of signals through this network (Figure 23) will depend on the series impedance of each line trap and the shunting impedance of the station bus. The nature of trap impedance is discussed in 7.1. The bus impedance consists of many individual impedances in parallel. Power transformers, potential transformers, and shunt reactors are all self-resonant at low frequencies and exhibit capacitive impedance characteristics at carrier frequencies. Every other item of power apparatus connected at the bus junction, including bus conductors, bushings, circuit breakers, and current transformers, has a natural capacitance with respect to ground. The impedance of power lines terminating on the bus will vary over a wide range because of standing wave patterns and the nonuniform placement and tuning of line traps. The resultant net bus impedance usually has only capacitive and resistive components. Its magnitude will fluctuate as a function of frequency but will in general be low (100 Ω or less), except in very small stations.

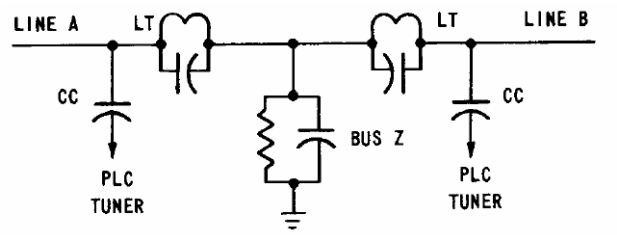

Figure 23—Cross-coupling path through line trap network

5.7.2.3 Uncoupled phases

Although a carrier-frequency signal may be coupled to only one phase of a three-phase power line, it is never confined to such a simple path. At distances of 16 km or more from the point of origin, signal strengths of the same order of magnitude may exist on all three phases. Because it is routine practice to trap only the coupled phase, carrier energy on the other phases is free to pass through a receiving station bus, hindered only by the associated impedance discontinuity and a reduction in signal strength caused by the dispersal of energy among various other lines and shunt paths.

At a receiving location, energy levels on unused phases are frequently found to be as high as on the coupled phase. The effectiveness of a line trap here in reducing the signal level at stations beyond the receiving station is, at most, only about 3 dB. The line trap, however, is very effective in protecting the receiver from other sources of interference.

5.7.2.4 Parallel lines

Frequently several transmission lines will enter a station over the same or adjacent rights-of-way, with parallels extending over several spans. A considerable amount of carrier energy may be exchanged, particularly where two lines are constructed as a double circuit on common towers.

Copyright © 2005 IEEE. All rights reserved.
Copyright The Institute of Electrical and Electronics Engineers, Inc.
Provided by IHS under license with IEEE
No reproduction or networking permitted without license from IHS
Not for Resale

5.7.3 Cross-station attenuation measurement

Cross-station attenuation of a locally originated signal is almost always greater than cross-station attenuation of a signal originated at a distant location. For measuring with a local signal, the procedure is to connect a carrier-frequency signal generator into the line tuner on one line and measure the received signal level at the terminated line tuner on the other line. The difference between the inserted signal level and the received level is called near-end cross-station attenuation. To measure far-end cross-station attenuation, it is necessary to insert the carrier-frequency signal at the far end of the first line. Both lines under consideration must have properly terminated line tuners at the station being tested. The difference in the received signal level measured on the two respective terminations is far-end cross-station attenuation. Near-end and far-end values are compared in Figure 24 at a substation that does not involve parallel lines.

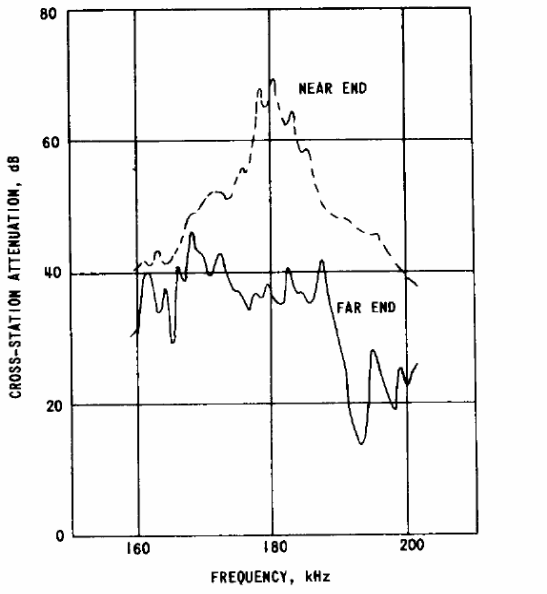

Figure 24—Example of near-end and far-end cross-station attenuation

Near-end cross-station attenuation has more significance at transmitter locations and at stations where simple amplifier-type repeaters are applied. It is a measure of the influence that a local transmitter might have on other carrier facilities in the same station. The permissible gain of a repeater may be determined by deducting the desired singing-point margin from the measured value of near-end cross-station attenuation. The singing-point margin is the amount of additional gain (decibels) that can be inserted into a loop without sustained oscillations developing. Line traps in the coupled phase are normally very effective in providing high values of near-end cross-station attenuation.

Far-end cross-station attenuation has more significance at receiver locations. Far-end cross-station attenuation is also a measure of the influence of a received carrier signal on carrier facilities coupled to other lines in the receiver station.

5.7.4 Methods for increasing cross-station attenuation

In most carrier applications, the standard use of line traps with each carrier-coupling circuit provides adequate rejection to the passage of interfering signals. In applications in which the value of cross-station attenuation is not adequate, special measures should be considered.

Copyright © 2005 IEEE. All rights reserved.

Copyright The Institute of Electrical and Electronics Engineers, Inc.
Provided by IHS under license with IEEE
No reproduction or networking permitted without license from IHS
Not for Resale

When the attenuation to a carrier signal's passage through the line trap network exceeds a certain magnitude, cross-coupling through other paths (usually the unused phases) becomes predominant. The exact level where this crossover takes place is difficult to establish. Special treatment of the coupled phase beyond normal practice without also treating the uncoupled phases is therefore not usually beneficial.

Trapping of uncoupled phases on one or more lines can produce substantial improvements. Where it is not considered practical to install traps in series with unused phases, it is sometimes feasible to install coupling capacitors connected between the station bus and the ground. The presence of the capacitor lowers the impedance of the bus and increases attenuation to the passage of carrier signals. This bus treatment may be advantageously applied to both the coupled and the uncoupled phases. Lowering the station bus impedance by the addition of substantial shunt capacitance has also been recommended for other aspects of carrier behavior such as the efficiency of wide-band coupling filters.

Frequency frogging is a technique based on telephone-line carrier practice wherein transmitting and receiving frequencies are exchanged. Identical frequencies are transmitted in both directions from a repeater, and identical frequencies are also received from each direction. It is rarely used in modern PLC systems.

Coupling-capacitor voltage transformers (CCVT) are sometimes connected to all three phases of a line or a station bus (to supply potential for relaying and other 60 Hz functions). In this case, carrier performance is improved at no additional cost.

When a coupling capacitor has been installed on a station bus, it is possible to tune it to ground to provide an efficient short circuit at one frequency. Particularly if applied to all three phases, this technique can provide an exceptionally high magnitude of cross-station attenuation at the one frequency. However, there is a risk that the inductive characteristic of the tuned circuit at frequencies higher than its resonance can produce parallel resonance with the capacitive impedance of the bus. This result will permit lower than normal values of cross-station attenuation to exist at the frequency of this antiresonance.

In some situations, separate single-frequency phase-to-ground circuits are coupled to each of the three phases of a power line. If a cross-coupling problem occurs on one of these circuits, it is possible to make use of the existing coupling capacitors on the other phases to effect a tuned short circuit to ground. The procedure is to add components converting the line tuners to double-frequency operation, tune the second frequency section to the frequency of the problem circuit, and connect it to ground.

If a cross-station attenuation problem exists between two nonparallel lines in a station, a fair degree of improvement may be realized by coupling one carrier circuit center phase-to-ground and the opposing carrier circuit outer phase to outer phase (Mode 2 coupling). The cross-coupled carrier energy will approach a bridge-type null to whatever extent balance exists in both symmetrical circuits.

There is no practical method of reducing mutual coupling between parallel transmission lines. Generally the only defense against interference that it can cause is careful selection of frequencies, so that all carrier circuits can operate in a compatible manner.

5.8 Coupling methods

There are several ways for feeding one or more conductors of a three-phase power line so that PLC signals will propagate down the line. Modal theory (5.3.3) shows that carrier signal currents generally flow in all three phases of a power line as well as in any static wires present. The efficiency of coupling signals to and from the lines depends on the particular coupling arrangement selected.

Copyright © 2005 IEEE. All rights reserved.
Copyright The Institute of Electrical and Electronics Engineers, Inc.
Provided by IHS under license with IEEE
No reproduction or networking permitted without license from IHS
Not for Resale

Coupling methods used include the following:

a) Mode 1 (three-phase coupling)
b) Center phase-to-ground
c) Center phase-to-outer phase
d) Outer phase-to-ground
e) Intercircuit

The first four methods apply to one three-phase power line, but the last method is used to couple signals into two separate power lines.

Mode 1 coupling is theoretically the lowest loss method for coupling carrier signals to and from the power lines. It has the advantage of providing a very high channel dependability, because it can withstand a single-phase or a two-phase-to-ground fault near a terminal without the carrier signal being eliminated. It has the disadvantage of high cost because three sets of tuning equipment are required.

An arrangement that provides a good approximation for Mode 1 coupling is shown in Figure 25. Two RF hybrids are connected so that the current supplied to the center conductor of the power line is 180° out of phase with the equal currents supplied to the two outer conductors and equal in magnitude to their sum. The modal coupling efficiency for Mode 1 coupling is 0 dB (or 100%). The simplest and most frequently used coupling method is the center-phase-to-ground scheme shown in Figure 26. It uses the minimum amount of equipment and is fairly efficient. The calculated center-phase-to-ground modal coupling efficiency is –1.6 dB at each end of the line. Additional losses can occur, however, if static wires are not used on the power line, and if the soil in the vicinity of a terminal has poor conductivity. Refer to Table 4 for values to use in performance calculations.

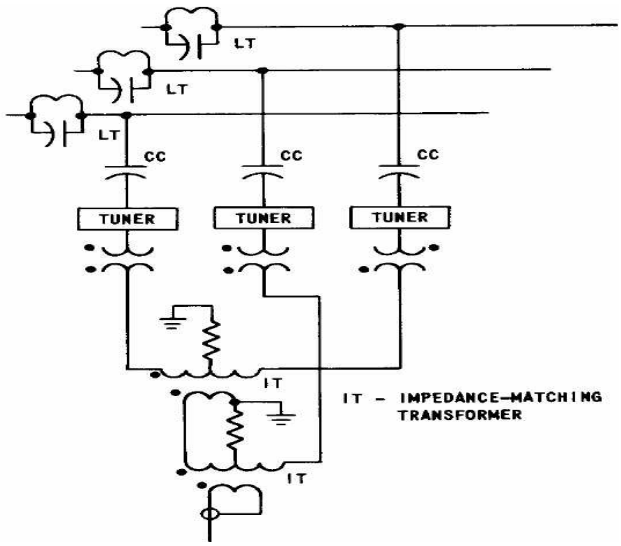

Figure 25—Mode 1 coupling

Center-phase-to-outer-phase (interphase) coupling, which is shown in Figure 27, is the next most frequently used method and is becoming increasingly popular. In this arrangement, the two currents are equal in magnitude and 180° out of phase. It has the advantage of being somewhat more efficient than center-phase-to-ground coupling, and it provides a calculated –1.1 dB modal efficiency per line end. This method provides greater channel dependability than center phase-to-ground coupling, because a single-phase fault at the substation will not eliminate the carrier signal. Furthermore, its coupling loss is not significantly affected if static wires are not used and if the ground conductivity is poor.

Copyright © 2005 IEEE. All rights reserved.

Copyright The Institute of Electrical and Electronics Engineers, Inc.
Provided by IHS under license with IEEE
No reproduction or networking permitted without license from IHS
Not for Resale

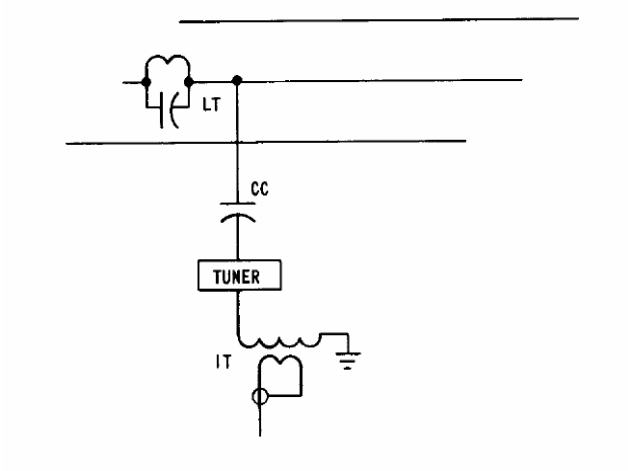

Figure 26—Single-line-to-ground coupling

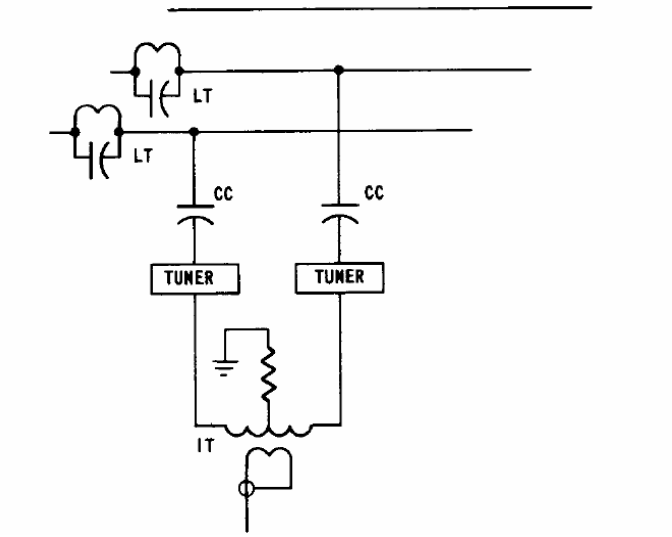

Figure 27—Center-phase-to-outer-phase coupling

Intercircuit coupling, which is shown in Figure 28, is generally a center-phase-to-center-phase coupling between two separate power lines in close proximity to each other. This arrangement provides two redundant paths for the carrier signal.

Copyright © 2005 IEEE. All rights reserved.
Copyright The Institute of Electrical and Electronics Engineers, Inc.
Provided by IHS under license with IEEE
No reproduction or networking permitted without license from IHS
Not for Resale

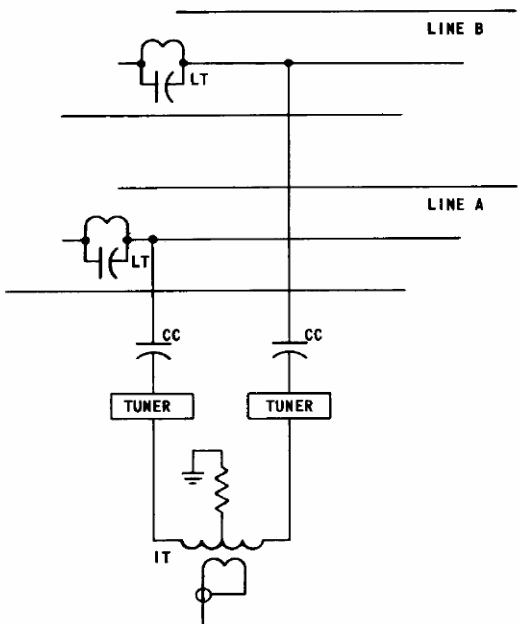

Figure 28—Intercircuit coupling

5.9 Channel bandwidth and modulation types

5.9.1 Consideration for choosing the right channel modulation

Individual philosophy and past experience tends to dictate the type of channel chosen for relaying purposes. One of the foremost reasons is the availability of the channel. Because PLC is over the power line, the channel is already present. It tends to be one of the most economical channels available for relaying, and the relay engineer has full control of the communication channel. The next step is which type of modulation to choose. Philosophy tends to play a larger influence in this area. With an ON–OFF channel, the channel is not required for tripping, only for blocking for an external fault. With proper application and tuning of the coupling equipment, an external fault will not significantly affect the carrier signal. One drawback is that the channel is not continuously monitored. But with the addition of an automatic checkback system, some of this problem is mitigated. Frequency shift channels are continuously monitored but require that the signal be transmitted across the same power line where the fault has occurred. The unblock system compensates for this shortcoming.

5.9.2 Bandwidth considerations

Choosing the bandwidth necessary for a relaying channel depends on many factors. The most important philosophy to keep in mind is to have the fastest channel with the greatest security possible. The wider the bandwidth, the faster the channel but that also means more noise is allowed into the receiver filter. So a compromise is made. ON–OFF channel bandwidth is typically 1000 Hz to 1500 Hz (for speed), whereas the alternate use of 500 Hz to 600 Hz bandwidth is also acceptable. FSK channel bandwidth for line relaying is typically 500 Hz to 600 Hz (for security), whereas the alternate use of 1000 Hz to 1500 Hz bandwidth is also acceptable. FSK channels for DTT bandwidth are typically the narrowest (slowest but most secure) at 200 Hz to 300 Hz.

Copyright © 2005 IEEE. All rights reserved.

Copyright The Institute of Electrical and Electronics Engineers, Inc.
Provided by IHS under license with IEEE
No reproduction or networking permitted without license from IHS
Not for Resale

5.10 Effects of faults on PLC channels

Studies of the effects of noise on PLC channels date back to the early 1960s. Attenuation has also been studied fairly extensively. However, little is written on the effects of faults with relation to noise and attenuation on the PLC channel.

5.10.1 Attenuation

Measurements have been made on a 230 kV line for the attenuation during a single phase-to-ground fault and three phases to ground fault. The attenuation is less on phase-to-phase coupling versus phase-to-ground coupling. Table 9 represents the maximum average additional attenuation values found.

Table 9—Additional attenuation for various faults vs. coupling

Fault type	Coupling	Additional attenuation (dB) with fault located at			
		0 km	0.8 km	3.2 km	80 km
One phase-to-ground	Phase-to-phase	11	11	11	11
One phase-to-ground	Phase-to-ground	38	20	17	11
Three phase-to-ground	Phase-to-phase	50	40	37	37
Three phase-to-ground	Phase-to-ground	58	48	39	37

Open phases tend to show more attenuation than noted in Table 9. Obviously with multiphase coupling, the effect of the fault is mitigated. It is reasonable to assume that there would be similar attenuation effects at other line voltages.

5.10.2 Noise

The characteristics of noise on a transmission line during a fault are complex and vary with particular conditions of the line. However, several statements can be made to generally describe the noise during a fault, as follows:

a) Noise voltage is significantly larger just after the occurrence of the fault but attenuates almost completely after a time interval of about 1.5 ms. Refer to Udo and Kawai [B182].

b) Low current faults will generate a high noise voltage, and it is sustained much longer, on the order of 0.2 s for a fault current of about 20 A. Conversely, high fault currents will generate a noise voltage that will dissipate at a much faster rate as noted in item 1).

c) Once the fault is fully established, there is no appreciable noise caused by the arc if the fault is more than 200 A.

Copyright © 2005 IEEE. All rights reserved.
Copyright The Institute of Electrical and Electronics Engineers, Inc.
Provided by IHS under license with IEEE
No reproduction or networking permitted without license from IHS
Not for Resale

6. Frequency selection

6.1 Factors influencing selection

The range of frequencies that most U.S. users regard as the PLC spectrum is from 30 kHz to 500 kHz. In Canada, limited use is made of frequencies above 200 kHz. Several factors must be considered in selecting suitable frequencies for a particular application and for using this spectrum efficiently. These factors include the following:

a) Requirements for the new facilities
   1) Bandwidth and frequency spacing
   2) Isolation from sources of interference
b) Existing frequencies
   1) Interference to other services
   2) Costs of frequency changes
c) Frequency planning
d) Line coupling and tuning
e) Noise and line attenuation
f) Power cable circuits

6.2 Requirements of new facilities

When considering new facilities for any relatively large carrier system, the first and usually most difficult consideration is determining the frequencies of existing facilities already operating in the spectrum. Before making a preliminary frequency study, however, the requirements of the desired new facilities must be established and borne in mind.

6.2.1 Bandwidth and frequency spacing

Spacing requirements for relaying channels are specified by the minimum frequency separation allowed between the center frequencies of the channels. These requirements apply to both ON–OFF channels and FSK transferred-trip channels. Auxiliary voice channels, sometimes used with relaying channels, require additional frequency spectrum.

For SSB voice channels, the minimum frequency separation is specified from the band edge of one channel to the nearest band edge of the adjacent channel. Spacing between relaying and SSB channels is specified from the center frequency of the relaying channel to the nearest band edge of the SSB channel.

Where minimum frequency separation between two dissimilar channels has not been specified, the larger of the minimum separations individually recommended for the two types of equipment should be used. Table 10 lists representative frequency separation requirements for ON–OFF equipment, and Table 11 lists the separation for FSK equipment. The required separation is shown for 20 dB of minimum external isolation using hybrids or filters.

6.2.2 Isolation from sources of interference

The minimum spacing requirements of 6.2.1 relate generally to isolation between carrier services on the same line. Some guidelines for avoiding interference from sources on other lines and in other stations are discussed in the following paragraphs.

Copyright © 2005 IEEE. All rights reserved.

Copyright The Institute of Electrical and Electronics Engineers, Inc.
Provided by IHS under license with IEEE
No reproduction or networking permitted without license from IHS
Not for Resale

Table 10—Frequency spacing requirements in kilohertz for AM to AM and AM to FSK equipment

Equipment and bandwidth	AM (ON-OFF)			
	Narrow band w/o voice	Narrow band with voice	Wide band w/o voice	Wide band with voice
AM (ON-OFF)				
Narrow band w/o voice	2.0			
Narrow band with voice	8.0	8		
Wide band w/o voice	5.0	8	5	
Wide band with voice	8.0	8	8	8
FSK				
Narrow band	2.0	8	5	8
Medium band	2.5	8	5	8
Wide band	4.5	8	5	8

Table 11—Frequency spacing requirements in kilohertz for FSK equipment

Equipment and bandwidth	Frequency shift keyed		
	Narrow band	Medium band	Wide band
Unidirectional (TX to TX)			
Narrow band	0.5		
Medium band	1.5	1.5	
Wide band	3.0	3.0	3.0
Bidirectional (TX to RX)			
Narrow band	1.5	3.0	4.5
Medium band	3.0	3.0	4.5
Wide band	4.5	4.5	4.5

A common guideline for assigning relaying frequencies is to use two-line-section separation to provide sufficient isolation for channels on the same frequency. This guideline provides the cross station attenuation of three buses, which is about 45 dB. The guideline suggesting two-line-section separation is not always appropriate. For example, some utilities apply a three-section separation for direct transferred-trip applications. When substantial doubt exists, isolation measurements should be made.

Where two power lines are near each other and parallel for a few kilometers, there is signal coupling between the lines. Consequently, channels operating on the same frequency may interfere with each other. Figure 29 shows calculated results for two representative cases of coupling between power lines.

Copyright © 2005 IEEE. All rights reserved.
Copyright The Institute of Electrical and Electronics Engineers, Inc.
Provided by IHS under license with IEEE
No reproduction or networking permitted without license from IHS
Not for Resale

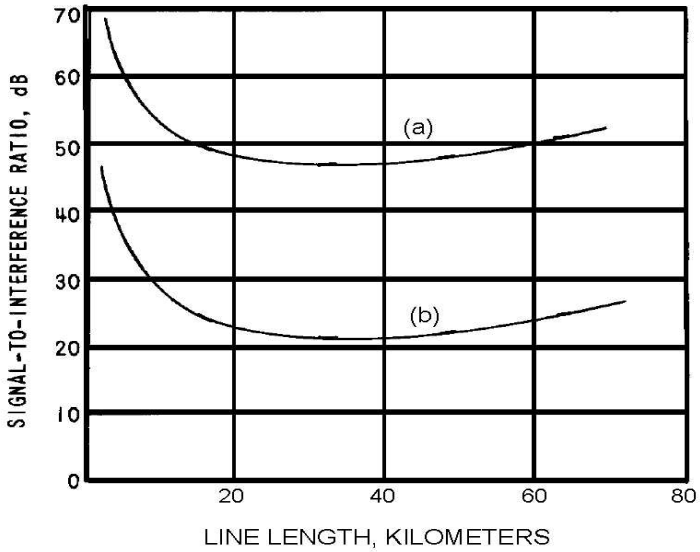

(a) 300 m

(b) 600 m

NOTE—SIR is based on the assumption of approximately equal signal levels on each line.

Figure 29—Coupling between parallel power lines vs. center phase separations

In areas where the carrier density is high, it will sometimes be very difficult to find space in the frequency spectrum for new channels by use of ordinary guidelines and rules. In such situations, it may be necessary to resort to some means of providing greater isolation, so that frequencies can be "packed" more efficiently.

Various methods can be used to increase isolation from interfering channels or abnormal noise sources. Interference from channels in other power-line sections can be reduced by using line traps to isolate carrier signals in one section from those in other sections. When a high degree of isolation is needed, line traps may be used in all three phases. It may be necessary to use line traps and coupling capacitors to form bandstop filters in each phase.

Isolation between transmitters or between transmitters and receivers on adjacent channels on the same conductor can be achieved using hybrids and filters (see 7.5). Isolation can also be achieved by coupling adjacent channel transmitters on different phase conductors of the same power line. This isolation may be substantial at the near (transmitting) end of the line but almost negligible at the distant (receiving) end. Coupling to different phases can often solve an otherwise difficult line-tuning problem.

Carrier transmitters on the same frequency may sometimes be operated on different lines in the same station. The cross-station attenuation between two lines that are equipped with resonant traps will frequently exceed 40 dB at the center frequency.

Copyright © 2005 IEEE. All rights reserved.

Copyright The Institute of Electrical and Electronics Engineers, Inc.
Provided by IHS under license with IEEE
No reproduction or networking permitted without license from IHS
Not for Resale

6.3 Existing frequencies

6.3.1 Frequency survey

When new PLC channels are to be installed, a survey should be made of frequencies already used within at least two line sections of each section in which new channels are to be installed. The survey should also include frequencies in use on any lines that parallel or cross the line section. When several new carrier services are to be added to a large system with complex interconnections, the frequency survey must also consider frequencies used by neighboring utilities. Most PLC users routinely exchange frequency information with other utilities.

Users of PLC should be aware that there are many other users of frequencies in the same spectrum, including navigational radio facilities, and care is required to avoid interference with these users. The use of these frequencies for PLC applications in the United States is not licensed by the Federal Communications Commission (FCC). In Canada, a form of licensing is granted by the Department of Communications (DOC) permitting use of frequencies to 490 kHz with several specific restrictions. The use of PLC frequencies in both countries is permitted on a strict noninterference basis.

6.3.2 Frequency changing costs

If it is impossible to find adequate space in the spectrum for new carrier channels, existing frequencies must be rearranged to provide spectrum space. Often it will be found that frequency changing costs are a significant part of the total price of adding new carrier facilities. When more than one frequency rearrangement scheme is being considered to accomplish the same purpose, an economic comparison is necessary. An estimate of frequency changing costs determined by the use may include

a) Engineering and drawing changes
b) New parts, such as crystals and filters
c) Labor costs for retuning and testing transmitters and receivers
d) Parts and labor for retuning of line-coupling system
e) Transmission line and communication circuit outage costs
f) Overheads and contingencies

6.4 Frequency planning

6.4.1 General considerations

Time and effort devoted to long-range planning of carrier system growth can result in higher efficiency in the use of the available spectrum. Achieving a maximum frequency density on a carrier system should be a goal that is given its appropriate share of consideration each time new frequency assignments are made. A plan for approaching this goal should be maintained. To be effective, such a plan must be reevaluated whenever actual growth of the carrier system deviates from what has been anticipated.

6.4.2 Relay channel frequency plans

What might be an appropriate plan for one utility might not be appropriate for another. For example, if most lines are relatively short and low-frequency SNR is not a problem, it may be feasible to group relay channel frequencies in the lower part of the spectrum, thus reserving higher frequencies for SSB telephone systems, which usually require more bandwidth. Most utilities find that they can repeat the use of relay channel frequencies at several locations to good advantage (assuming proper isolation is maintained).

Copyright © 2005 IEEE. All rights reserved.
Copyright The Institute of Electrical and Electronics Engineers, Inc.
Provided by IHS under license with IEEE
No reproduction or networking permitted without license from IHS
Not for Resale

When several channels are installed on a line section, the minimum frequency separation suggested in Table 10 and Table 11 should be considered. If different types of channels are to be used on the same line, several frequency combinations should be studied to see if a best arrangement exists.

6.4.3 SSB telephone channel frequency plans

Typical SSB telephone channels in North America have a nominal bandwidth of 4 kHz per channel per direction. If possible, channels should be assigned to frequency bands between integer multiples of 4 kHz.

Other than the wider spectrum requirements, no special rules are required for SSB telephone channels. The minimum frequency separations suggested in Table 10 and Table 11 should be considered.

6.5 Line coupling and tuning

The limitations of the commonly used methods of coupling must be kept in mind during the process of frequency assignment. Any frequency grouping assigned on one line must fit into the coupled bands that can be provided on one or more phases by conventional coupling methods. For example, assume that four new channels are to be added and the preliminary frequency survey has shown that the only clear-channel frequencies available are 34 kHz, 58 kHz, 118 kHz, and 198 kHz. It is not feasible to couple these frequencies on a single phase-to-ground or phase-to-phase path. If two phases are available, one solution may be to use two-frequency tuning to couple 34 kHz and 118 kHz on one phase and 58 kHz and 198 kHz on the other. The choices that must be considered in the acceptance or rejection of this arrangement would be the retuning costs and the relative difficulty of clearing other frequencies as opposed to the disadvantages of the proposed arrangement. One disadvantage is a higher cost for double-frequency tuning on two phases. A second disadvantage is a higher attenuation and poorer frequency response usually obtained on outer-phase-to-ground circuits as opposed to center-phase-to-ground because of modal conversion losses.

Another economic consideration sometimes affecting frequency assignment is the cost of larger coupling capacitors or higher inductance line traps that can provide wider bandwidths.

6.6 Noise and line attenuation

After the factors in a preliminary study have been considered, the additional items of noise and line attenuation should be considered. Noise on a power line is a decreasing function of frequency, whereas attenuation increases with frequency. The optimum frequency therefore depends on the combined effect of these frequency-dependent factors and may be different on any two lines.

On horizontal single-circuit lines up to about 160 km long, the slope of the attenuation versus frequency function is fairly slight for adjacent-phase-to-phase and center-phase-to-ground coupled circuits. On the other hand, during adverse weather, noise will be about 6 dB to 10 dB higher at 50 kHz than at 200 kHz. Under this condition, the best SNR for a given transmitter power may occur at frequencies such as 150 kHz or 200 kHz. With lines longer than 160 km, the optimum frequency will be correspondingly lower. It will also be considerably lower on circuits with coupling, which does not involve the center phase.

For short lines, the easiest and most economical means for increasing the SNR or received power level is to increase transmitted power. Where long lines are involved and 50 W or 100 W transmitters are required, a further significant increase in transmitted power is economically and practically undesirable. The compromise between increasing transmitted power and reducing channel loss is an important consideration over a substantial range of line lengths.

Copyright © 2005 IEEE. All rights reserved.

Copyright The Institute of Electrical and Electronics Engineers, Inc.
Provided by IHS under license with IEEE
No reproduction or networking permitted without license from IHS
Not for Resale

6.7 Power cable circuits

Many factors have to be considered when selecting frequencies for use on power cable circuits. Among these factors are the type of cable, length of cable, transmitter power, return path (skid wire), and number of frequencies to be used. Because of high attenuation and the difficulty of obtaining adequate bandwidth, only frequencies between 30 kHz and 70 kHz are normally used.

6.8 Combination power cable/overhead line circuits

One method of determining frequencies for combination circuits of overhead line and power cables is to use frequencies that correspond to an odd number of one-eighth-wavelengths. This technique requires that the velocity of propagation of the cable as well as that of the overhead line be known to calculate the wavelength of the individual lines. The velocity of propagation of power cables varies with the construction and type of cable and compares the actual speed of signal propagation with the speed of light. The full wavelength for the frequency under consideration can be found as follows:

$$\lambda = \frac{3 \times 10^5 VP}{f} \tag{28}$$

where

λ is the wavelength in kilometers

3×10^5 is the speed of light in free space in kilometer/second

f is the frequency in Hertz

VP is the correction factor if propagation is less than the speed of light

For most overhead lines, the value of VP is about 0.98. For power cables, VP can range from 0.4 to 0.55.

7. Coupling components

7.1 Line traps

7.1.1 Introduction

The function of a line trap is to present a high impedance at the carrier frequency or frequencies being used while introducing a negligible impedance at the power frequency, which thereby minimizes the degree to which the carrier signal is

a) Dissipated in the station equipment

b) Grounded in the event of a fault outside the carrier transmission path

c) Attenuated by a tap line or a branch of the main transmission path

d) Received out of phase (which can result if multiple path transmission of a carrier signal is permitted to take place)

Line traps permit a greater choice of carrier frequencies by minimizing interference from other carrier channels. In effect, the purpose of a line trap is to ensure that the carrier transmission path remains isolated as much as possible, at carrier frequencies, from the rest of the system. The requirements and essential characteristics of line traps have been standardized in ANSI C93.3 and IEC 60353.

Copyright © 2005 IEEE. All rights reserved.
Copyright The Institute of Electrical and Electronics Engineers, Inc.
Provided by IHS under license with IEEE
No reproduction or networking permitted without license from IHS
Not for Resale

7.1.2 Application of line traps

When choosing a line trap, a careful evaluation of the purpose of the carrier channel, the degree of reliability required, the attenuation characteristics of the transmission path, and any future alterations to be made in the carrier channel must be made. Line traps are available with a variety of performance characteristics that can allow the selection of the type most suitable for current and future applications.

Line traps may be tuned or untuned. The tuned type of line trap (by far the most prevalent) is essentially a parallel L/C network with variations in the tuning circuit (or tuning pack as it is normally called), which provides for the choice of single-frequency, double-frequency, or wide-band tuning. Tuning packs are normally designed to operate in a specific band of the carrier frequency spectrum. These bands are available from manufacturers in standard ranges. The untuned line trap is a simple inductance that establishes carrier transmission path isolation by virtue of the very high inductive reactance of its coil.

7.1.3 Resonant traps

7.1.3.1 General

Resonant traps are available for single-frequency and two-frequency applications. They are designed to block only one or two carrier frequency signal bands and, typically, have less than 0.5 mH inductance. For specific impedance values of traps, refer to the manufacturer's information.

7.1.3.2 Single-frequency traps

The single-frequency line trap is the simplest of the tuned traps available. It is tunable to parallel resonance at any frequency within its nominal range. Its blocking band is usually defined as the band of frequencies over which the impedance magnitude is greater than 400 Ω. The circuit diagram and impedance characteristics for a single-frequency trap are shown in Figure 30 and Figure 31, respectively.

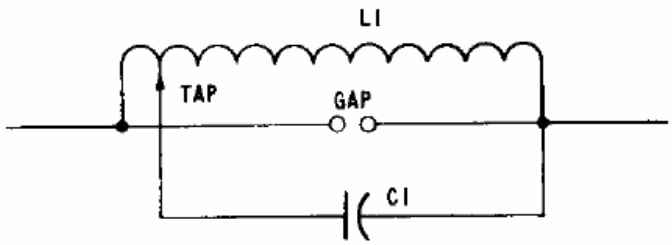

Figure 30—Single-frequency line trap

Copyright © 2005 IEEE. All rights reserved.

Copyright The Institute of Electrical and Electronics Engineers, Inc.
Provided by IHS under license with IEEE
No reproduction or networking permitted without license from IHS
Not for Resale

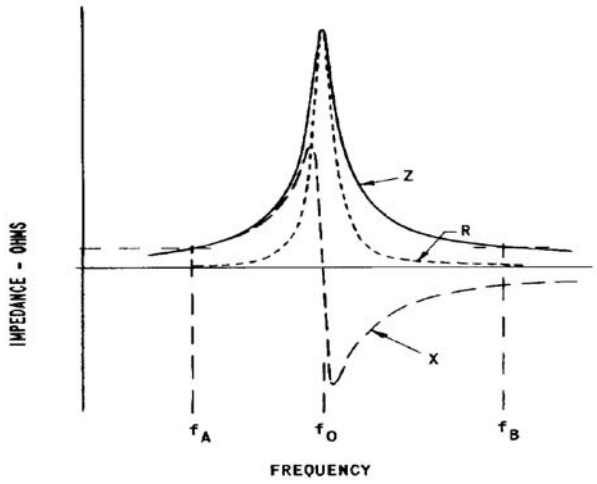

Figure 31—Impedance of a single-frequency line trap

Frequencies f_A and f_B in Figure 32 define the limits of the bandwidth. The electrical characteristics of the single-frequency line trap are discussed in 7.1.5.2.

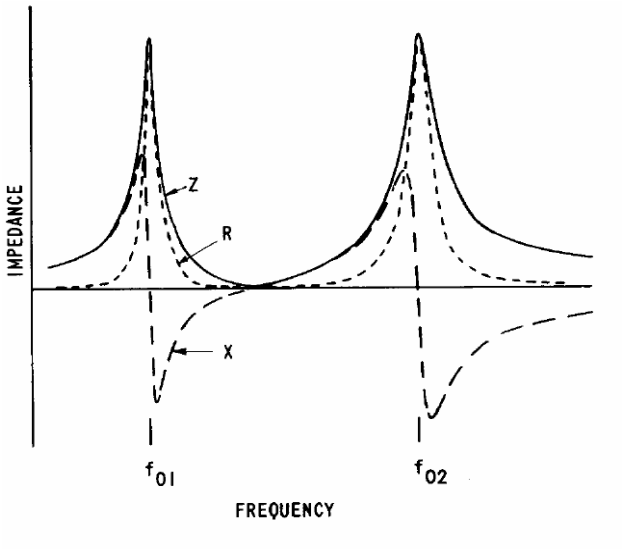

Figure 32—Two-frequency line trap

7.1.3.3 Two-frequency traps

The two-frequency trap, which is shown schematically in Figure 32, has a blocking band around two distinct resonant peaks, as shown in Figure 33.

Copyright © 2005 IEEE. All rights reserved.
Copyright The Institute of Electrical and Electronics Engineers, Inc.
Provided by IHS under license with IEEE
No reproduction or networking permitted without license from IHS
Not for Resale

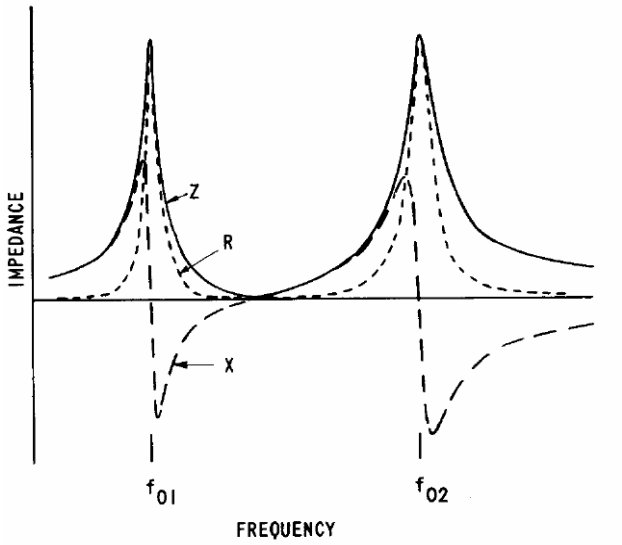

Figure 33—Impedance of a two-frequency line trap

7.1.4 Wide-band traps

7.1.4.1 General

Wide-band traps are more suitable for multichannel applications because it is very difficult to design resonant traps for more than two frequencies. The wide-band trap is tuned to a specific frequency band, such as 90 kHz to 200 kHz, and channels can be placed anywhere in the band. In this type of line trap, a tuning device is combined with the inductance of the main trap coil to provide a minimum blocking impedance across the entire band.

Two types of wide-band traps are used. These traps are the fixed wide band and the adjustable wide band. The untuned inductor, although not complying with the definition in the preceding paragraph, is also frequently classified as a wide-band line trap.

7.1.4.2 Fixed wide-band traps

Fixed wide-band line traps are factory constructed for a specific frequency band and cannot be adjusted in the field. The schematic of a fixed wide-band trap is shown in Figure 34. Representative impedance characteristics are shown in Figure 35.

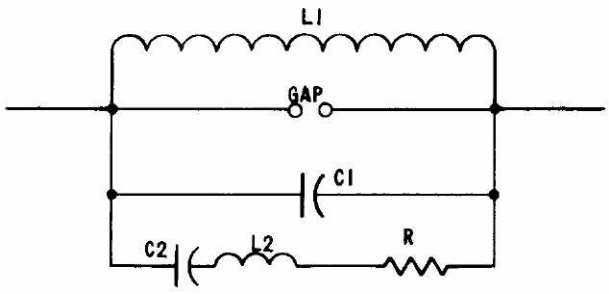

Figure 34—Wide-band line trap

Copyright © 2005 IEEE. All rights reserved.

Copyright The Institute of Electrical and Electronics Engineers, Inc.
Provided by IHS under license with IEEE
No reproduction or networking permitted without license from IHS
Not for Resale

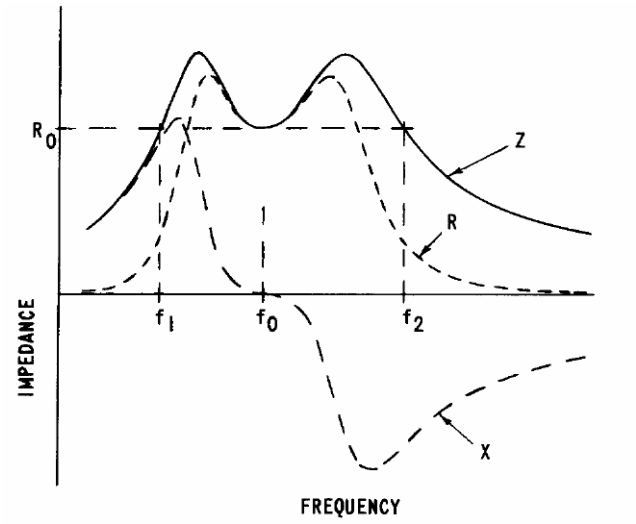

Figure 35—Impedance of a typical wide-band line trap

7.1.4.3 Adjustable wide-band traps

The adjustable wide-band line trap, which is shown schematically in Figure 36, has a tuning device that permits positioning the blocking band in various frequency regions. This type of tuning also permits the selection of different values of minimum impedance. The impedance characteristics of the adjustable wide-band trap are essentially the same as those of the fixed wide-band trap (see Figure 35). Fixed wide-band traps will typically provide a wider bandwidth than adjustable wide-band traps for a given inductance.

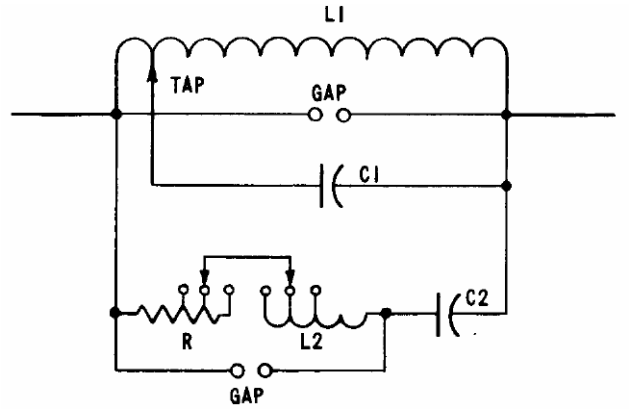

Figure 36—Adjustable wide-band line trap

7.1.4.4 Untuned line inductors

Untuned line inductors are high inductance line traps (0.5 mH or higher) that do not require a tuning pack. These inductors should have a self-resonance frequency above the carrier band. Their application usually involves high pass coupling networks (refer to 7.3.3.3). An advantage of an inductor is that the adjustment and maintenance of a tuning pack are not required. An occasional disadvantage is that under certain switching conditions, it is possible that the inductor can series resonate with the capacitance of switchyard apparatus. This process is most likely to occur under open-circuit breaker conditions, that is, a deenergized line.

Copyright © 2005 IEEE. All rights reserved.
Copyright The Institute of Electrical and Electronics Engineers, Inc.
Provided by IHS under license with IEEE
No reproduction or networking permitted without license from IHS
Not for Resale

Some line inductors are self resonant at frequencies within the carrier band. Such inductors generally have a low Q (typically 8–10) and a high series resistive component.

7.1.5 Electrical characteristics of line traps

7.1.5.1 General

The carrier frequency characteristics of line traps are considered here. Power frequency and mechanical characteristics are considered in 7.1.6.

7.1.5.2 Single-frequency traps

The single-frequency line trap provides blocking impedance for a single frequency or for a narrow band of frequencies. The schematic and impedance curves for the single-frequency trap are shown in Figure 30 and Figure 31, respectively. Curves for impedance Z, resistive component R, and reactive component X are shown separately in Figure 31.

The lowest resonant frequency f_0 to which a single-frequency trap might be tuned with a given capacitor C_1 is determined from

$$f_0 = \frac{1}{2\pi\sqrt{L_1 C_1}} \tag{29}$$

Higher frequencies are tuned by adjusting the tap on L_1 away from the end of the coil. The trap coil then serves as an autotransformer to reduce the effective value of C_1. The inductance L_1 is also reduced to some extent, but unless there is an excessive number of turns between the tap and the trap terminal, the reduction of L_1 is not significant. Note that the entire trap coil is always included between the main terminals. The impedance at resonance Z_0 for the single-frequency trap can be calculated from

$$Z_0 = 2\pi f_0 L_1 Q \tag{30}$$

The factor Q (quality factor) is equal to the inductive reactance divided by the series resistance in the circuit. If it is assumed that the Q remains constant with frequency, then it is apparent that the resonant frequency impedance of a line trap is proportional to the trap inductance and to the resonant frequency. The Q of a line trap is sometimes intentionally lowered by connecting a resistor in series with the capacitor in the tuning pack. Although this process admittedly lowers the trap impedance at its resonant frequency, it broadens the resistive component. The purpose of this change is to counteract degradation to the carrier signal, which can occur in some switchyards if the bus capacitance resonates with the inductive reactance component of trap impedance just below its resonant frequency.

For frequencies near resonance, the impedance and its phase angle can be calculated from the universal resonance curve shown in Figure 37.

For frequencies far off resonance, the magnitude of the impedance can be approximated with

$$Z = \frac{2\pi f L_1}{\alpha^2 - 1} \tag{31}$$

where $\alpha = f / f_0$.

Equation (31) is precise for an infinite Q (ideal coil).

Copyright © 2005 IEEE. All rights reserved.

Copyright The Institute of Electrical and Electronics Engineers, Inc.
Provided by IHS under license with IEEE
No reproduction or networking permitted without license from IHS
Not for Resale

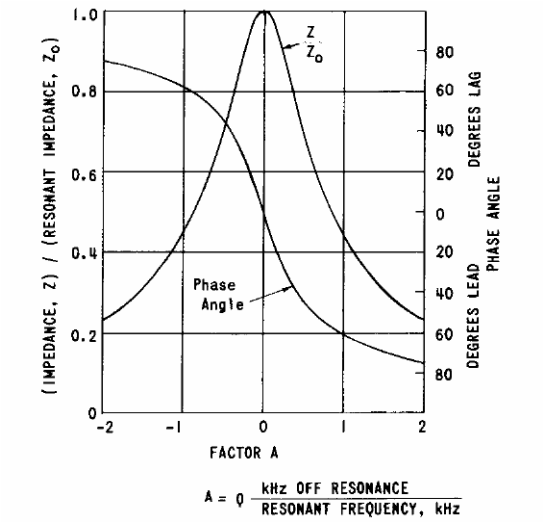

Figure 37—Universal resonance curve for a parallel-resonant tuned circuit

The phase angle θ of the impedance can be determined from Equation (32):

$$\theta = Arc\tan Q\left(1 - \frac{1}{\alpha^2}\right) \tag{32}$$

Two or more carrier channels may be used with a single-frequency trap if their frequencies fall within the bandwidth of the trap. The actual usable spacing varies with the resonant frequency and can be determined by looking at the manufacturer's specifications.

7.1.5.3 Two-frequency trap

The two-frequency trap provides two resonant peaks of impedance, each of which is similar to a single-frequency resonance. In general, the impedance at each resonant frequency is less of an impedance that could be obtained with a single-frequency trap with the same inductance. Figure 32 and Figure 33 show the schematic and impedance characteristics, respectively, for the two-frequency trap. As indicated in Figure 32, both resonant circuits L_1C_1 and L_2C_2 are tuned to the higher of the two frequencies.

Resonance at the lower frequency is then established by selection of the proper value of capacitor C_3 and setting the second tap on the main coil L_1.

It is generally recommended that the two resonant frequencies be separated by 25 kHz or 25% of the higher frequency, whichever is greater. Closer spacing results in distortion in the shape of the impedance curve between peaks and an increasing lack of symmetry in each blocking band. This effect can be observed by comparing Figure 38 with Figure 39. The maximum frequency spacing is constrained only by the tuning packs. The two tuning packs in the two-frequency trap are independent of one another.

Copyright © 2005 IEEE. All rights reserved.
Copyright The Institute of Electrical and Electronics Engineers, Inc.
Provided by IHS under license with IEEE
No reproduction or networking permitted without license from IHS
Not for Resale

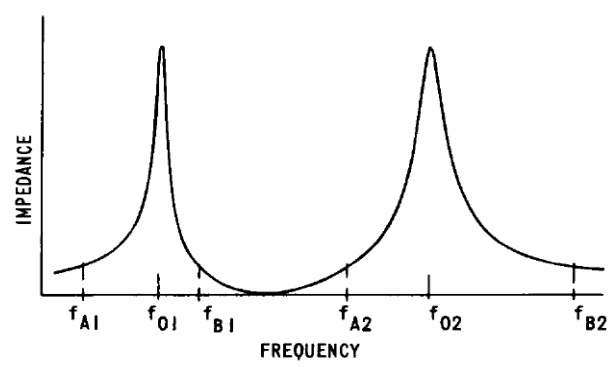

Figure 38—Impedance of a two-frequency line trap with normal frequency spacing

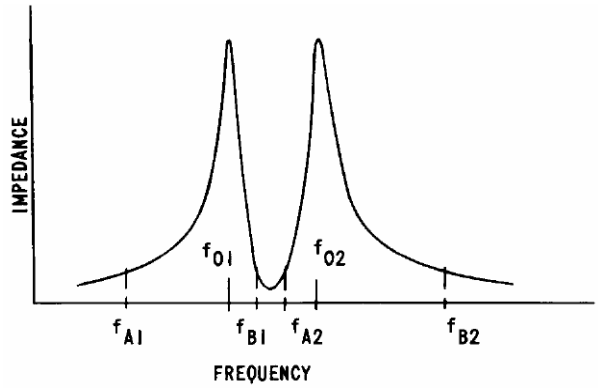

Figure 39—Impedance of a two-frequency line with close frequency spacing

7.1.5.4 Fixed wide-band traps

These line traps provide a wide-band impedance characteristic. To obtain the desired characteristic, circuit components are added to the main trap coil to form a terminated half section filter (see Figure 34). Resonant circuits L_1C_1 and L_2C_2 constitute the filter elements, and the resistor R provides the termination. The terminating resistance is normally equal to the nominal characteristic impedance R_0 of the filter. This resistance also represents the minimum impedance value within the bandwidth of the trap (see Figure 35). In some versions of the fixed wide-band line trap, more complex circuitry obtains a flatter (more desirable) impedance characteristic. Minimum blocking impedance levels range from 400 Ω to 1000 Ω.

The geometric mean frequency (GMF) is given by the following expression: GMF = $\sqrt{f_{\text{high}} \times f_{\text{low}}}$, where f_{high} and f_{low} are the high- and low-frequency cutoffs of the bandwidth of any bandpass filter. In the case of a line trap, it is the high- and low-frequency points for minimum blocking impedance. The equation for bandwidth of a wide-band line trap is shown in Equation (33)

$$\text{BW} = \frac{2\pi\sqrt{2}TL_1f_0^2}{R} \tag{33}$$

where

BW is the bandwidth, in kilohertz
f_0 is the GMF, in kilohertz
T is the detuning factor (approximately 0.9)
L_1 is the main coil inductance, in millihenry
R is the terminating resistance, in ohms

Copyright © 2005 IEEE. All rights reserved.

Copyright The Institute of Electrical and Electronics Engineers, Inc.
Provided by IHS under license with IEEE
No reproduction or networking permitted without license from IHS
Not for Resale

The actual band limits f_1 and f_2 can be determined once the GMF and bandwidth are known:

$$f_1 = \sqrt{\left(\left(\frac{BW}{2}\right)^2 + f_0^2\right)} - \frac{BW}{2} \quad (34)$$

$$f_2 = \sqrt{\left(\left(\frac{BW}{2}\right)^2 + f_0^2\right)} + \frac{BW}{2} \quad (35)$$

7.1.5.5 Adjustable wide-band traps

An adjustable wide-band line trap consists of an inductance coil with an adjustable tuning pack that can be either field or factory adjusted. Typically the coil inductance ranges from 0.265 mH to 1.59 mH. The circuit is electrically equivalent to the fixed wide-band trap in that it forms a terminated half section bandpass filter.

The bandwidth and band limits of an adjustable wide-band trap may be computed with the same formulas as for the fixed wide-band trap, i.e., Equation (34) and Equation (35). The detuning factor *T* may be slightly lower for some settings of the main coil tap.

Minimum blocking impedance levels range from 400 Ω to 1000 Ω. Relationships between bandwidth and impedance level for two values of trap inductance are shown in Figure 40.

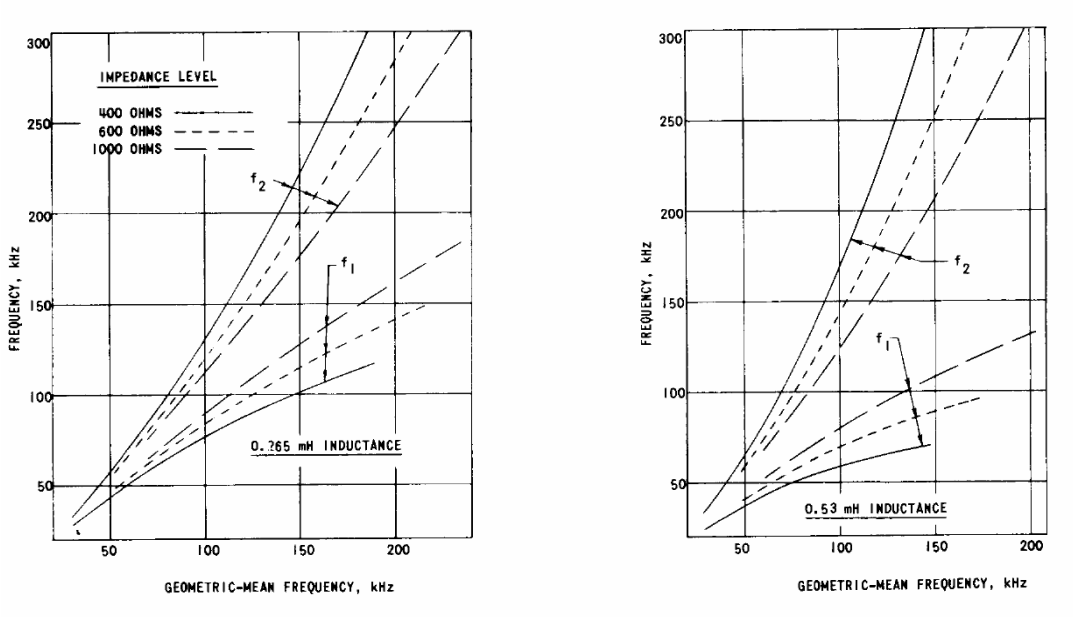

Figure 40—Bandwidths obtainable with wide-band traps of 0.265 mH and 0.53 mH inductance and different impedance levels

7.1.5.6 Untuned line inductors

A line inductor has a reactive impedance that varies directly with frequency. Line inductors are available with inductance ratings from 0.53 mH to 2.65 mH with a variety of intermediate values.

Copyright © 2005 IEEE. All rights reserved.
Copyright The Institute of Electrical and Electronics Engineers, Inc.
Provided by IHS under license with IEEE
No reproduction or networking permitted without license from IHS
Not for Resale

7.1.6 Power frequency and mechanical characteristics of line traps

The power frequency and mechanical characteristics that must be met in the design and manufacture of line traps are prescribed by the appropriate American National Standards (ANSI C93.3). Table 12 lists continuous current ratings and their related thermal and mechanical ratings.

Table 12—Current ratings

Continuous current rating (A)	1 second thermal fault current rating (A)	Mechanical current rating (A)
400	15 000	38 250
800	20 000	51 000
1200	36 000	91 800
1600	44 000	112 200
2000	63 000	160 650
3000	63 000	160 650
4000	80 000	204 000

Line traps can be mounted in either vertical or horizontal position. However, the mechanical aspects can take various forms related to the particular situation. Manufacturers have varying capabilities to meet mounting requirements, and therefore, each particular situation has to be resolved when it occurs. Seismic problems, abnormal wind conditions, environmental considerations, lack of space, and cooling requirements, all contribute to the station designer's difficulty in determining how and where a line trap will be mounted.

7.2 Coupling capacitors

7.2.1 General

Efficient propagation of PLC signals for point-to-point communication requires an efficient transfer of carrier energy between the transmitter and the receiver terminals. Coupling circuits have taken several forms over the years, but current practice uses a coupling capacitor as the major component. The coupling capacitor is the most widely used and effective component that enables signal coupling to and from the HV line. The requirements and essential characteristics of coupling capacitors have been standardized in ANSI C93.1. Protective gaps in line tuners or coupling capacitors may have a disastrous effect on the operation of a protective relay system. The protective gaps must operate for a short time after the fault to prevent damage to equipment from the high-frequency energy in the fault wave front. However, the protective gaps must seal off before the protective relays require the PLC channel to operate. If these gaps do not seal off by the time the protective relays operate, a misoperation will probably result.

7.2.2 Construction

Conventional coupling capacitors are made with a paper/liquid dielectric system. Strips of kraft paper are interleaved with strips of aluminum foil and wound into rolls. The rolls are connected in series to provide a large voltage withstand capability. These rolls are flattened and stacked in a hollow porcelain insulator with

Copyright © 2005 IEEE. All rights reserved.

Copyright The Institute of Electrical and Electronics Engineers, Inc.
Provided by IHS under license with IEEE
No reproduction or networking permitted without license from IHS
Not for Resale

external sheds (skirts) that provide a long creepage path. The insulators are equipped with metal fittings on each end that serves for both mounting and electrical connection.

There is a manufacturing process using film instead of paper insulation between the strips of aluminum foil. This film technology results in a lower dissipation factor, higher level of insulation and better capacitance stability. Because capacitance is inversely proportional to the distance between the plates and the film thickness is approximately two thirds that of paper, capacitance for film-insulated units will be higher than paper.

To provide different capacitance values for a specified voltage rating, rolls with different cross-sectional areas are used. (This also requires different porcelain diameters.) When all rolls are in place, the capacitor unit is filled with a suitable fluid and sealed. The combination of the paper and the liquid forms a reliable dielectric system.

The capacitor units are mounted on a metal base housing. This base unit usually contains a drain coil. The drain coil along with the capacitor units form a frequency-dependent voltage divider. This combination provides a high impedance at high frequencies and a low impedance to the 50/60 Hz power frequencies at the carrier connection. Above 20 kHz, almost all carrier frequencies are passed to the carrier connection. A drain coil must be present to prevent the voltage at the carrier connection from rising to the flashover voltage of the protective gaps. The required location for the drain coil is in the coupling capacitor base with an optional second unit, for added redundancy, in the line tuner unit (LTU) cabinet. Protective gaps limit transient voltages at the carrier connection. A carrier-grounding switch eliminates high potential and the possibility of very high transients from being present on the carrier lead during maintenance or repair work.

Single capacitor units are available for line-to-line voltages in the range from 34 kV to 161 kV. Where larger ratings are required, combinations of single units are stacked to provide the necessary rating. For a given type of coupling capacitor, the value of capacitance is inversely proportional to the rated voltage. Table 13 lists the approximate range of coupling capacitances available for various voltage classes.

Table 13—Range of coupling capacitor sizes

Voltage class (kV)	Capacitance range (μF)
34	0.004–0.010
46	0.004–0.015
69	0.003–0.015
92	0.002–0.020
115	0.0019–0.020
138	0.0014–0.016
161	0.0012–0.014
230	0.0009–0.010
287	0.0006–0.007
345	0.0005–0.006
500	0.0014–0.005
765	0.0023–0.005

--`,,`,`,-`-`,,`,,`,`,,`---
Copyright © 2005 IEEE. All rights reserved.
Copyright The Institute of Electrical and Electronics Engineers, Inc.
Provided by IHS under license with IEEE
No reproduction or networking permitted without license from IHS
Not for Resale

7.2.3 Application

A coupling capacitor is operated with a line tuner to form a resonant circuit or a bandpass or high-pass filter at carrier frequencies. Reference should be made to 6.3 for a discussion of various types of tuners.

The bandwidth available for a bandpass tuner/coupling capacitor combination is proportional to the value of the coupling capacitance for a specified GMF.

A single coupling capacitor provides for a phase-to-ground path to couple carrier signals on one phase of a power line. Where the application requires that the signals be coupled to more than one phase, additional coupling capacitors are required.

7.2.4 Coupling capacitor voltage transformer (CCVT)

In some applications, an additional function is performed by the coupling capacitor in conjunction with additional circuitry in the base housing. The coupling capacitor serves as a power frequency voltage divider with a tap being brought out of the bottom capacitor unit. This tap is connected to a reactor/transformer combination (also protective gaps and other components), which converts the tap voltage to 115 V output when rated voltage is applied to the capacitor stack. The CCVT provides potential that can be used for line synchronism checks or as inputs for protective relays and metering equipment. The normal carrier frequency operation of the coupling capacitor is unaffected by the CCVT circuitry (see ANSI C93.1).

7.3 Line tuners and bypasses

In addition to the line trap and the coupling capacitor, or CCVT, the coupling of signals to the open-wire HV transmission line or power cable requires a component called a line tuner. The line tuner is connected in series between the coupling capacitor, or CCVT, and the coaxial cable(s), which transfer PLC signals from transmitter/receiver equipment to the line tuner input. The role of line tuner equipment is as follows:

a) Efficient coupling of PLC transmitters and receivers to the power line or power cable

b) Protection of personnel and electrical and electronic equipment from power frequency voltages and from surges and transients from the power line

c) Impedance matching of PLC transmitter/receiver equipment to the power line or power cable.

d) Attenuation of undesired signals

e) Bypasses around power transformers, switches, and other discontinuities in the power line at PLC frequencies

The requirements and essential characteristics of the line tuners have been standardized in ANSI C93.4 and IEC 60481.

Line tuning equipment may be very simple, or fairly complex, depending on the coupling requirements for the system to be coupled and the bandwidths required. The bandwidth of the line tuner depends on the type and complexity of the tuner, the coupling capacitor value, the resonant frequency, and the line or power cable impedance. The most common line tuner connection is from one phase wire to ground, although connection to two or more phase wires is common on critical circuits for redundancy and increased signal level, and for transmitting PLC signals through line faults. Line tuners are available in standard types that are tunable over the entire PLC frequency range by changing inductor and capacitor units, or by tuning or changing the strapping of the units present in the tuner box or cabinet. Line tuners are mounted in close proximity to the coupling capacitor in an outdoor location. The common types available include single-frequency resonant, two-frequency resonant, wide-band bandpass, and wide-band high-pass tuners.

Copyright © 2005 IEEE. All rights reserved.

Copyright The Institute of Electrical and Electronics Engineers, Inc.
Provided by IHS under license with IEEE
No reproduction or networking permitted without license from IHS
Not for Resale

The single-frequency resonant tuner is actually a bandpass tuner with one series resonant circuit. The bandwidth of this line tuner, depending on the tuning frequency, coupling capacitor value, and line impedance, may be wide enough to pass a wide band of frequencies. (A formula for calculating the bandwidth of any bandpass tuner will be given in 7.3.3.) The two-frequency line tuner is actually a resonant tuner with two inputs and a single output, with the two series resonant branches tuned individually to the two frequencies with the coupling capacitor. The wide-band bandpass tuner may have from two to five resonant circuits in alternate series and shunt parallel arrangements to achieve wide bandwidths. The ability to couple a very wide band of frequencies, or to couple several frequencies separated by a considerable frequency spacing, can be accomplished with higher order wide-band tuners without resorting to extra-hi-C capacitors or CCVTs.

The line tuner functions as part of the terminating circuit of the HV transmission line and should present an impedance equal to the characteristic (surge) impedance of the line or power cable. As in transmission line analysis, reflections will result if the ends of the transmission are not properly terminated. The reflections depend on the severity of the mismatch and are frequency dependent because the impedance of the tuner is frequency dependent. The reflections are especially troublesome on short lines, tapped lines, overhead/ power cable circuits, and lines with untrapped stubs. The bandwidths of line tuners and line traps should be complimentary to reduce reflections and improve power transfer to the line. Therefore, single-frequency line tuners should be used with single-frequency line traps; two- frequency traps with two-frequency tuners; and wide-band traps with wide-band tuners. Mixing line trap and tuner types may result in RF current and voltage reflections that can cause high reflected power at the PLC terminals. These reflections usually result in amplitude ripples that may repeat at intervals of less than 1 kHz.

Measurements can be made on a line section with the coupling equipment connected to the line to check the line tuner settings. This process is called “profiling the line” and can be done with available variable frequency sources with adequate power to overcome coupling losses and provide good signal-to-noise at the receive end of the line. It is especially helpful in power cable circuits or in a combination of overhead lines and power cables.

7.3.1 Single frequency

The simplest version of the line tuner consists of a series inductor for resonating the capacitance of the coupling capacitor, or CCVT, at one frequency within the PLC frequency band. It is commonly called a single-frequency resonant tuner primarily to distinguish it from the two-frequency line tuner. The tuner is usually connected to a single phase wire and ground (single phase-to ground coupling) through the coupling capacitor. The other components may include a power frequency blocking capacitor, an impedance matching transformer (IMT), a grounding switch, a spark gap, and an optional drain coil. The circuit for a typical single-frequency tuner is shown in Figure 41. A compensating capacitor that reduces the tuner bandwidth may be included in series with the tuning inductor.

The drain coil effectively reduces the power frequency voltage across the line side of the tuner by shunting the 60 Hz current to ground. The user should also be aware that if an optional drain coil is placed in the line tuner, the parallel combination of the two drain coils (the other in the coupling capacitor) should be considered.

Copyright © 2005 IEEE. All rights reserved.
Copyright The Institute of Electrical and Electronics Engineers, Inc.
Provided by IHS under license with IEEE
No reproduction or networking permitted without license from IHS
Not for Resale

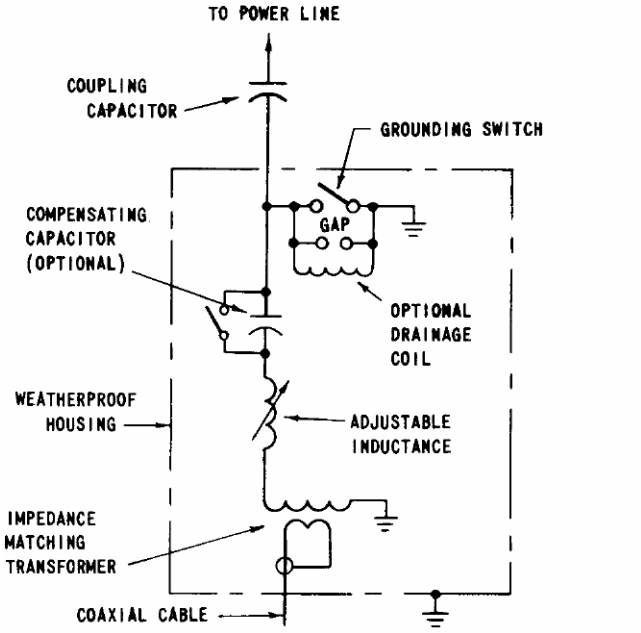

Figure 41—Single-frequency line tuner

The process of tuning the components in the tuner, and changing the taps on the IMT, is necessary to present a path for minimum reflected power to the transmitters being coupled to the line. It requires a certain minimum return loss. Table 14 shows the relation among reflected power, return loss, standing wave ratio, amplitude response, and impedance variation (50 Ω). The formula development given in Equation (36) shows the relationship between the parameters that describe a four-terminal network, such as a tuner, and they are given for reference. A minimum return loss of approximately 14 dB is equivalent to 4% reflected power. Test equipment is available to properly align line tuners with these parameters. These parameters are all related to a constant called the reflection coefficient (or reflection factor), which is defined as

$$\rho = \frac{R - Z}{R + Z} \tag{36}$$

where R is the terminating impedance of the network and Z is the impedance looking into the network. Z does not have to be a pure resistance.

Parameters that describe a reactive network are as follows:

1) Standing wave ratio (S)
2) Amplitude response, or ripple (A_{dB})
3) Reflected power ($P_{r)}$
4) Return loss (RL)
5) Impedance (real) variation (R_{min} and R_{max})

Copyright © 2005 IEEE. All rights reserved.

Copyright The Institute of Electrical and Electronics Engineers, Inc.
Provided by IHS under license with IEEE
No reproduction or networking permitted without license from IHS
Not for Resale

The relationships between these parameters as they relate to the reflection coefficient are

$$\rho = \frac{S-1}{S+1} \tag{37}$$

$$S = \frac{\rho+1}{\rho-1} \tag{38}$$

$$A_{\text{dB}} = -10\log_{10}(1-\rho^2) \tag{39}$$

$$P_r(\%) = 100\rho^2 \tag{40}$$

$$R_{\min} = \frac{1-\rho}{1+\rho} \tag{41}$$

$$R_{\max} = \frac{1+\rho}{1-\rho} \tag{42}$$

$$RL = 20\log_{10}\left(\frac{1}{\rho}\right) \tag{43}$$

$$\begin{aligned} RL &= 10\log_{10}\left(\frac{1}{\rho^2}\right) \\ &= 10\log_{10}\left(\frac{100}{p_R}\right) \\ &= 10\log_{10}(100) - 10\log_{10}(P_r) \end{aligned} \tag{44}$$

$$RL = 20 - 10\log_{10}(P_r) \tag{45}$$

Because can be a complex quantity, Equation (37) to Equation (45) are given for the values of that are real only, and the result is noncomplex values. Table 14 illustrates the values of S, A_{dB}, P_r, RL, $R_{\min}$, and $R_{\max}$. Notice that for = 0.2, S = 1.5; A_{dB} = 0.1773 dB; P_r = 4.0%; and RL = 14.0 dB. Also, the reflected power for RL = 10 dB is 10%, with a ripple (or roll off) of 0.457 dB. Understand that these are all theoretical values that do not include the losses in the reactive elements. The values of $R_{\min}$ and $R_{\max}$ assume a terminating impedance of 50 Ω. Equation (30) gives a direct relationship between return loss and reflected power.

Copyright © 2005 IEEE. All rights reserved.
Copyright The Institute of Electrical and Electronics Engineers, Inc.
Provided by IHS under license with IEEE
No reproduction or networking permitted without license from IHS
Not for Resale

Table 14—Four-terminal network descriptive parameters

ρ	S	A_{dB}	P_r (%)	RL (dB)	R_{min} (Ω)	R_{max} (Ω)
0.01	1.02	0.00043	0.01	40.00	49.0	51.0
0.02	1.04	0.00174	0.04	33.98	48.0	52.0
0.03	1.06	0.00391	0.09	30.45	47.1	53.1
0.04	1.08	0.00695	0.16	27.96	46.1	54.2
0.05	1.10	0.01087	0.25	26.02	45.2	55.3
0.08	1.17	0.02788	0.64	21.94	42.6	58.7
0.1	1.22	0.04368	1.00	20.00	40.9	61.1
0.15	1.35	0.09833	2.25	16.47	36.9	67.6
0.20	1.50	0.17730	4.00	13.97	33.3	75.0
0.25	1.67	0.28030	6.25	12.04	30.0	83.3
0.316	1.92	0.4568	9.98	10.00	26.0	96.2
0.50	3.00	1.249	25.00	6.02	16.6	150.0
0.707	5.85	3.0	50.12	3.00	8.5	292.0

For power cable circuits, the bandwidth of the resonant tuner is usually too narrow to couple more than a single frequency because of the impedance of the power cable. Equation (46) gives the bandwidth of bandpass line tuners as a function of the variables previously stated, plus a constant *K*, which depends on the order of the tuner (number of resonant circuits) and the return loss

$$\mathrm{BW} = 2\pi(\mathrm{GMF})^2 R_L C_c' K \tag{46}$$

where

C_c' is the coupling capacitor + blocking capacitor in tuner
K is from Table 15 for N = 1
R_L is the line impedance

Also

$$\mathrm{BW} = F_{\mathrm{high}} - F_{\mathrm{low}} \tag{47}$$

and

$$(\mathrm{GMF})^2 = F_{\mathrm{high}} F_{\mathrm{low}} \tag{48}$$

Copyright © 2005 IEEE. All rights reserved.

Copyright The Institute of Electrical and Electronics Engineers, Inc.
Provided by IHS under license with IEEE
No reproduction or networking permitted without license from IHS
Not for Resale

Table 15—Constant *K* value vs. return loss

Return loss (dB)	Reflection coefficient (%)	Ripple loss (dB)	Values of the constant *K*			
			N = 1	N = 2	N = 3	N = 4
14.0	20.0	0.177	0.4070	0.6983	1.1890	1.5450
12.0	25.0	0.300	0.5348	0.8175	1.2250	1.5865
9.6	33.0	0.500	0.6984	0.9625	1.2645	1.6364
3.0	70.7	3.000	2.0000	1.7920	1.5449	1.8702

Combining Equation (47) and Equation (48) gives Equation (49):

$$\mathrm{BW} = F_{\mathrm{high}} - \frac{(\mathrm{GMF})^2}{F_{\mathrm{high}}} \tag{49}$$

And putting this in quadratic form gives

$$F^2_{\mathrm{high}} - F_{\mathrm{high}}\mathrm{BW} - (\mathrm{GMF})^2 = 0 \tag{50}$$

Using the quadratic formula, the solution for F_{high} is

$$F_{\mathrm{high}} = \frac{\mathrm{BW}}{2} + \sqrt{\left[(\mathrm{GMF})^2 + \left(\frac{\mathrm{BW}}{2}\right)^2\right]} \tag{51}$$

and the lower pass-band frequency F_{low} is

$$F_{\mathrm{low}} = F_{\mathrm{high}} - \mathrm{BW} \tag{52}$$

In Equation (52) for tuner bandwidth, for resonant tuners, the tuning frequency can be substituted for the GMF and the effective coupling capacitor value can be calculated by considering the 60 Hz blocking capacitor and any compensating capacitor value. The value of *K* for the resonant tuner is shown in Table 15 for different values of return loss.

The insertion loss of a resonant tuner depends on the tuning frequency, the loss in the inductor and any series capacitors including the coupling capacitor, and the line impedance. Plastic film dielectrics in CCVTs and coupling capacitors has reduced the losses inherent in coupling capacitors at PLC frequencies. Because the series resistance is a greater percentage of the impedance of cable circuits, the insertion loss of tuners used for cables may approach 10 times that in overhead line tuners.

Using the formula for bandwidth and the constant *K* for the resonant tuner, a 0.005 μF capacitor gives a bandwidth of about 62 kHz at 14 dB return loss for a tuning frequency of 130 kHz. This band of frequencies will be adequate to couple several channels for protective relaying and SSB channels as well. Typically line tuners should be the same type and bandwidth at each station on a PLC line section. The line trap blocking bandwidth should encompass the bandwidth of the tuner except where the tuner is a high-pass unit. Historically the line tuner and the line trap have been the same type. However, to eliminate the need to retune the line trap for a frequency change, it may be preferable to use a wide-band trap. The same type of line tuner should be used on all phases at the same terminal of the power cable or overhead line. The

Copyright © 2005 IEEE. All rights reserved.
Copyright The Institute of Electrical and Electronics Engineers, Inc.
Provided by IHS under license with IEEE
No reproduction or networking permitted without license from IHS
Not for Resale

transmitters and receivers should all be accommodated within the 12 dB to 14 dB return loss bandwidth of the tuner. The channels may be combined and isolated with series L/C circuits or by balanced or skewed hybrids.

7.3.2 Double frequency

Two-frequency line tuners contain two input paths that are flanked and connected in series with the coupling capacitor (Figure 42). To prevent the input signals at the two frequencies from feeding back to the opposite input, a parallel L/C trap tuned to the opposite input frequency is inserted in each path in series with the inductor. Each series branch of the two-frequency tuner will therefore exhibit an amplitude response with frequency that has a low-loss transfer of power at the series resonant frequency and a peak of loss at the L/C trap frequency.

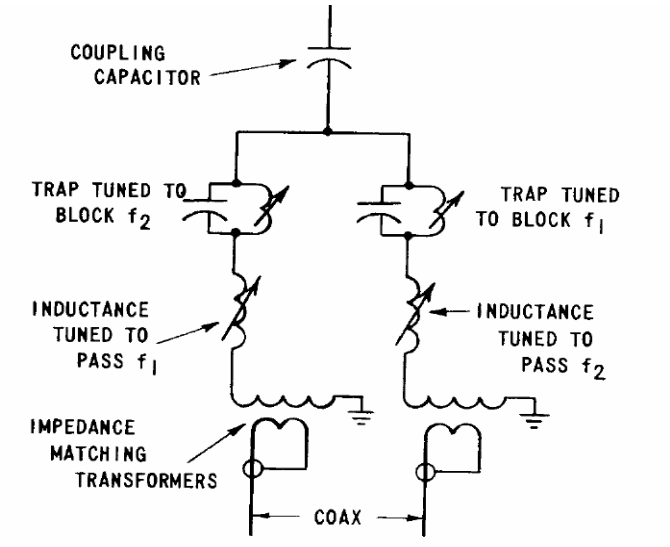

Figure 42—Typical two-frequency line tuner

The two frequencies must be separated by a spacing that is at least 25% of the higher frequency to minimize the interaction of the two paths.

The bandwidth of the two pass-bands may be anywhere from one fourth to one thirteenth of the bandwidth of a comparable single-frequency resonant tuner, depending on the spacing, frequencies, and line impedance. No closed form method calculates the response of a two-frequency line tuner. Formulas have been developed to calculate the element of a two-frequency tuner to aid in the analysis of these tuners.

The isolation of the two frequencies, or frequency bands, is provided by the parallel L/C circuits, whether the signals come from the local station (transmitters) or from the line (receivers). The bandwidth of the attenuation band may be very narrow if an isolation of 20 dB is desired. This narrow band may preclude using either of the inputs to couple more than one function through each branch of a two-frequency tuner. For multifunction coupling, wide-band bandpass tuners and hybrids may be more suited. The values of the components in the parallel L/C traps have a profound effect on widely spaced frequencies (over 40%).

--`,,`,`,-`-`,,`,,`,`,,`---
Copyright © 2005 IEEE. All rights reserved.

Copyright The Institute of Electrical and Electronics Engineers, Inc.
Provided by IHS under license with IEEE
No reproduction or networking permitted without license from IHS
Not for Resale

7.3.3 Wide band

7.3.3.1 High-pass tuners

A wide-band tuner may be either a high-pass tuner or a bandpass tuner. The typical high-pass tuner has three reactive components, including the coupling capacitor in three branches (Figure 43 and Figure 44). The low-frequency cutoff is determined by the coupling capacitor value and the line impedance. Table 16, as an example, shows the cutoff frequencies for a 10 dB return loss at 300 Ω line surge impedance. The table can be interpolated for other capacitor values and line impedances. Additional components will allow for lower cutoff frequencies and/or higher return loss. Both parameters are inverse with respect to the cutoff frequency.

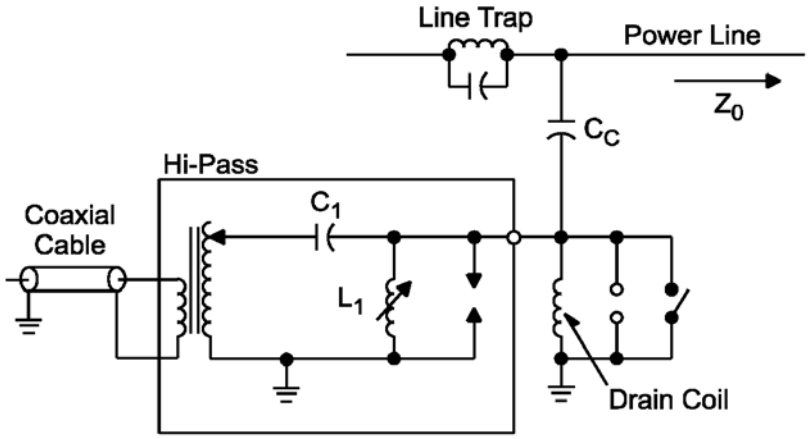

Figure 43—Typical high-pass tuner

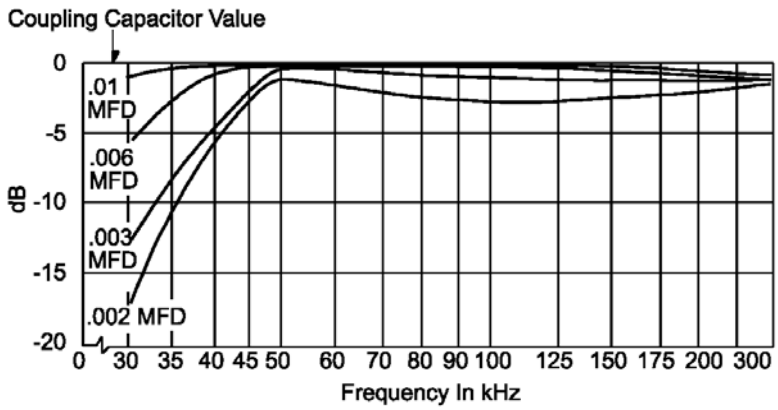

Figure 44—Typical high-pass tuner response

Copyright © 2005 IEEE. All rights reserved.
Copyright The Institute of Electrical and Electronics Engineers, Inc.
Provided by IHS under license with IEEE
No reproduction or networking permitted without license from IHS
Not for Resale

Table 16—Cutoff frequency

Coupling capacitor value (μF)	Cutoff frequency (kHz)
0.01	44.6
0.005	89.2
0.0025	178.4
0.001	446.0

7.3.3.2 Bandpass line tuner

Whether a tuner can be considered wide band depends on the value of the parameters given in Equation (47). A wide-band tuner will pass a band of frequencies determined by Equation (47) through Equation (53). By adding more resonant circuits into the line tuner, the bandwidth can be increased without changing the value of the other parameters. This increase allows a wider coupled bandwidth without resorting to a larger value of capacitance in the CCVT (Figure 45 and Figure 46).

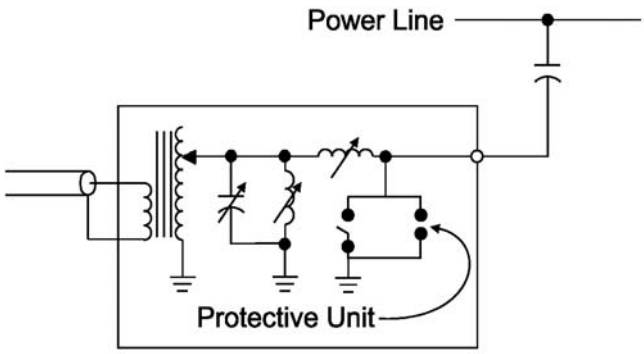

Figure 45—Typical bandpass tuner

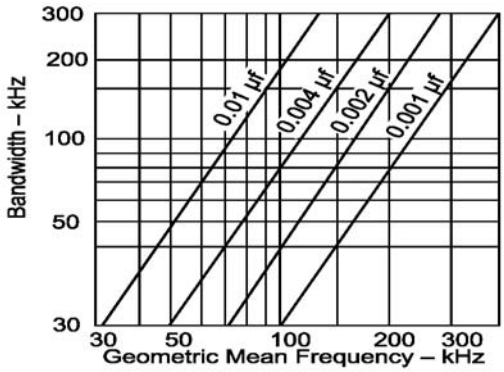

Figure 46—Theoretical bandwidth of a bandpass tuner

Copyright © 2005 IEEE. All rights reserved.

Copyright The Institute of Electrical and Electronics Engineers, Inc.
Provided by IHS under license with IEEE
No reproduction or networking permitted without license from IHS
Not for Resale

The resonant circuits are all tuned to the GMF of the tuner, and F_{low} and F_{high} are the theoretical band-edge frequencies depending on the selected value of *K*. For the greatest efficiency in coupling signals to the power line or cable, a minimum reflected power around 4% is required. Notice that 50% of the power is reflected at the 3 dB return loss and amplitude point. The tuner must terminate the frequency band including both transmitters and receivers in bidirectional applications. Therefore, tuners at both line ends must be tuned alike. Multiterminal lines are even more difficult to couple with wide-band tuners because of reflections.

The insertion loss of wide-band tuners depends on the number of resonant circuits, and the bandwidth which is a function of frequency, capacitor size, and line impedance. The values of components in wide-band tuners for power cables may require capacitor transformers to achieve realizable component values. Higher order bandpass tuners also increase the bandwidths of tuners where HV CCVTs result in small capacitance values.

7.3.3.3 Wide-band tuning with untuned line traps

When an untuned line inductor with a self-resonance above the carrier band is installed, a simple full pi-section, high-pass, coupling configuration should be used. Figure 47 shows the full pi-section high-pass coupling scheme. The shunt inductor L1 in the LTU cabinet is simply resonated with a suitable decade capacitor to make its inductance equal that of the line inductor. When the line is energized, the typical cutoff frequency is 90 kHz for a 1.0 mH inductor and a 0.005 MF coupling capacitor. It should be noted that the cutoff frequency is dependent on the magnitude of the bus capacitance. Switching conditions may alter the bus capacitance behind the line inductor; therefore, the cutoff frequency will change. This change in cutoff frequency is one disadvantage to this type of coupling. Another disadvantage is the cost of the larger line inductor. The main advantages are the wide bandwidth and the absence of any tuning packs that might fail. It is more advantageous to apply bandpass coupling networks when using inductors that have a self resonance within the carrier band. For more information on this subject, refer to Bagwell and Dobson [B22] and Combs [B58].

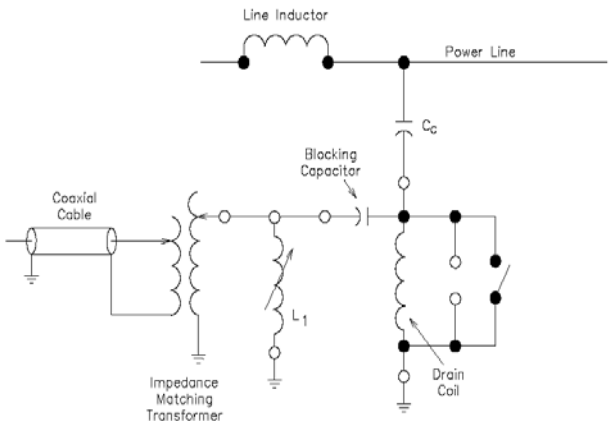

Figure 47—Full pi-section high-pass coupling

7.3.4 Drain coils in line tuners

As per ANSI C93.2, a drain coil must always be provided in the coupling capacitor. The purpose of the drain coil is to provide a low impedance path to ground for the power frequency current through the coupling capacitor and at the same time present a high impedance path to ground for the carrier frequency energy. In many instances, a drain coil will also be provided in the line tuner as an option. When this is done, then the two drain coils are in parallel and thus the impedance of the combination will be lower. Although this result may be good for the power frequency current, it causes extra losses at the PLC frequency. Although the

Copyright © 2005 IEEE. All rights reserved.
Copyright The Institute of Electrical and Electronics Engineers, Inc.
Provided by IHS under license with IEEE
No reproduction or networking permitted without license from IHS
Not for Resale

extra losses will be small, depending on terminating impedance, the user needs to be aware of this and take it into account in loss calculations. In general it will not cause a problem, but on long lines with high losses, it should be considered. If the extra losses are too great, the only recourse of action is to remove the drain coil from the line tuner.

7.3.5 Bypasses

A bypass is a combination of line tuner(s), coupling capacitors, line trap(s), and possibly auxiliary coupling devices that routes a PLC signal around a discontinuity in a power transmission line. The two types of bypasses are (1) short bypasses and (2) long bypasses. A bypass may be considered as a type of passive repeater that may have different transmission properties in different directions.

7.3.5.1 Short bypasses

A short bypass may be used when the distance to be spanned is 30 m or less, and there is no requirement to communicate with the bypassed location.

Figure 48a shows a single-frequency short bypass circuit, and Figure 48b shows a third-order bandpass short bypass circuit.

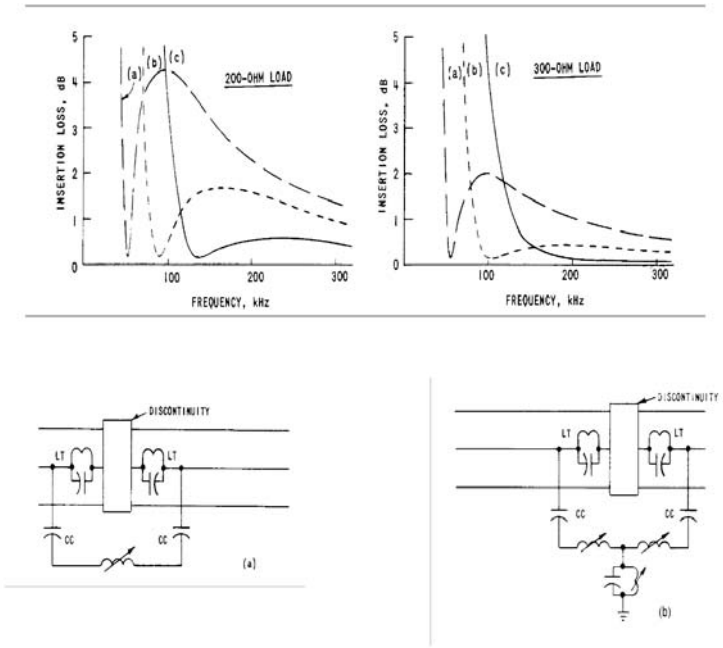

Figure 48—Short bypass circuits

The general bypass circuit requires the installation of a line trap on the coupled phase on each side of the discontinuity to isolate PLC signals. The circuit requires two coupling capacitors, two protective circuit devices with grounding switch and spark gap, and an inductive element. No IMT is used because both connections are made to the capacitors. Because the same inductor resonates both capacitors, which are effectively in series for a resonant bypass, the bandwidth of the bypass is one half the usual bandwidth of a resonant line tuner.

Copyright © 2005 IEEE. All rights reserved.

Copyright The Institute of Electrical and Electronics Engineers, Inc.
Provided by IHS under license with IEEE
No reproduction or networking permitted without license from IHS
Not for Resale

7.3.5.2 Long bypasses

The equipment that needed to install a long bypass consists of the line traps and coupling capacitors connected to the coupled phase(s) as for the short bypass connection. In addition, the line tuners are the standard type with an IMT. Two tuners of the same type are required (except in overhead line/cable interface bypasses), and these tuners can be separated by a distance up to several hundred meters depending on the cable losses. A coaxial cable can connect the low-impedance tuner inputs directly.

Because there is a coaxial cable available for connecting equipment (transmitters/receivers) at the bypass station, signals can be inserted or dropped at this location. The local drop can be either wide-band with hybrids or separation filters or frequency selective, with L/C series units. The losses across the bypass station caused by the insertion of hybrids can be 3.3 dB to 6 dB depending on the number of hybrids used. Lower loss connections with frequency selective circuits are also possible. Two possibilities for hybrids and line separation connections are shown in Figure 49 and Figure 50. The third hybrid can be inserted to send/receive the same signals to/from both A and B.

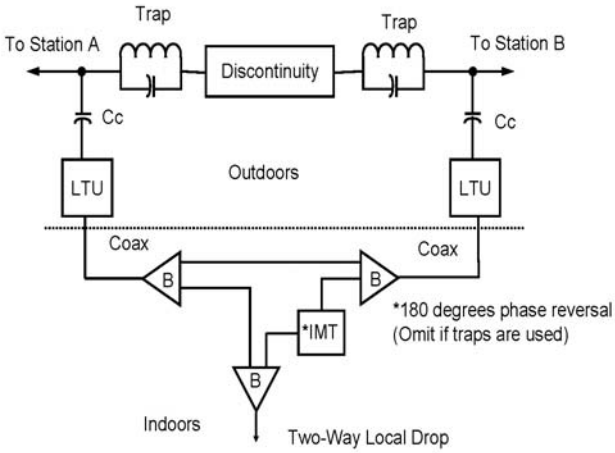

Figure 49—Long bypass with two-way local drop

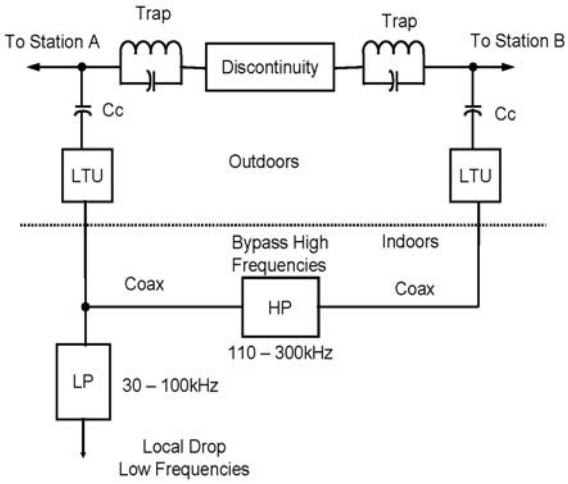

Figure 50—Long bypass with low-frequency local drop

Copyright © 2005 IEEE. All rights reserved.
Copyright The Institute of Electrical and Electronics Engineers, Inc.
Provided by IHS under license with IEEE
No reproduction or networking permitted without license from IHS
Not for Resale

7.4 Coaxial cables/lead-in conductors

7.4.1 Introduction

Coaxial cables and lead-in conductors are an integral part of the coupling and tuning portions of a PLC channel. Three specific types of conductors are normally used: coaxial cable, triaxial cable, and insulated single-conductor lead-in wire.

7.4.2 Coaxial cable

This type of cable is normally used for the low-impedance connection between a line tuner and a transmitter/receiver or between line tuners in a long bypass. Connections between auxiliary coupling devices also use coaxial cables. In these applications, the copper braid that forms an RF shield and is the outer conductor of the cable should be grounded at the transmitter/receiver end only, or at only one end of a bypass. Grounding both ends of the shield will allow large surge currents to flow through this connection during faults when ground potential rise conditions are present, which could saturate the IMT and result in an inoperable carrier channel.

A typical coaxial cable is RG-8/U, which is 1.029 cm diameter. The center conductor consists of seven strands of No. 21 copper wire forming an AWG #12 conductor. A braided shield made of AWG #36 copper strands forms the outer concentric conductor. The outer covering is a polyvinyl plastic jacket. The characteristic impedance of RG-8/U cable is 52 Ω. The attenuation versus frequency for this cable is shown in Table 17 for 100 m.

The most common polyvinyl compound used for jacket material is polyvinyl chloride (PVC). Although this material has excellent chemical and abrasion resistance, it does not have outstanding resistance to moisture absorption, to which many problems have been linked. Other compounds with better moisture resistance, such as black polyethylene (black PE), cross-linked polyethylene (XLPE), or chlorinated polyethylene (CPE), may be specified for the jacket material to get better moisture resistance.

Table 17—Typical attenuation characteristics of RG-8/U

Frequency (kHz)	Loss (dB/100 m)
30	0.125
50	0.144
100	0.180
150	0.216
200	0.253
300	0.295

7.4.3 Triaxial cable

For transmission lines operating at voltages greater than 230 kV, a triaxial cable may be used in place of the coaxial cable to connect the line tuner to the PLC transmitter/receiver to provide a higher degree of shielding where the ground potential rise is greater due to larger ground fault current. A triaxial cable provides a second shield insulated from the inner shield. The inner shield is grounded only at the transmitter/receiver equipment end, and the outer shield is grounded at both ends. The outer shield should be capable of carrying

Copyright © 2005 IEEE. All rights reserved.

Copyright The Institute of Electrical and Electronics Engineers, Inc.
Provided by IHS under license with IEEE
No reproduction or networking permitted without license from IHS
Not for Resale

large surge currents. This arrangement provides very effective shielding against both electromagnetic and electrostatic induction such that the surges induced in the signal leads are small. For even better shielding performance, a heavy ground conductor, connected periodically to the station ground grid, can be run in parallel with the triaxial cable to provide a lower impedance ground path to shunt most surge current from the triaxial cable outer shield.

Construction of a triaxial cable starts with a coaxial cable core (center conductor, insulation, and braid shield) over which a layer of insulation is applied. Then a second braid (or other shield) is applied over this insulation over which an outer jacket is added. The usual commercial jacket material is PVC. Triaxial cables can have problems with water absorption and uneven insulation between braids. If the insulation between braids is too thin, then "skips" or "holidays" can occur and the outer braid grounds the inner braid, which causes carrier problems. Water absorption problems were discussed in 7.4.2.

A particularly robust triaxial cable was developed for use in 500 kV switchyards. It takes an RG-213 coaxial cable core and adds a 2.54 mm (100 mil) layer of PE over it. Then a polymer-coated 8 mil aluminum tape is corrugated and longitudinally applied over this insulation and finished off with a CPE jacket. The heat of extrusion of the jacket fuses the polymer on the tape shield to form a water and gas tight sheath.

7.4.4 Insulated single-conductor lead-in wire

An insulated single-conductor lead-in connects the coupling capacitor to the line tuning equipment. Bare conductors and coaxial cable should not be used for this application because it is possible to introduce excessive leakage to ground with the former and excessive capacitance with the latter.

The connection between the line tuner and the coupling capacitor is a high-impedance point in the series-tuned circuit formed by the tuning inductor and the coupling capacitor, and stray capacitance and leakage to ground will increase the losses of the tuner and affect the bandwidth. A cable rated at a HV and of sufficient size to maintain some rigidity is recommended.

Two typical such cables are as follows: Cable 1 is a single conductor power cable, 15.5 mm in diameter, AWG #8, 7 strand copper conductor, rated 5 kV unshielded, for 90 °C wet or dry service with either ethylene-propylene (EPR) or XLPE insulation and a PVC jacket. Cable 2 is an airport lighting cable, 9.91 mm in diameter, AWG #8, 7 strand copper conductor, rated 5 kV unshielded, for 90 °C wet or dry service, with a combined black XLPE insulation and jacket.

To reduce the stray capacitance and leakage currents. either of the following methods may be used:

a) The single conductor lead-in should be run as directly as possible between its required terminations. The conductor insulation should be unbroken between its ends to maintain low leakage. It should be supported on insulators and fed through entrance bushings into the coupling capacitor and the line tuner. Drip loops should be used as needed to divert water from entering the line tuner or coupling capacitor housings.

b) The insulated single-conductor lead-in can be installed in a PVC or other plastic conduit that should be supported on stand-offs or insulators. If a significant part of the conductor's length is outside the conduit, it should be supported on insulators and fed through entrance bushings as noted in item a).

7.4.5 Insulation requirements

The typical lead-in conductor cited in 7.4.4 is rated for 90 °C conductor temperature continuously with emergency operation at 130 °C; the PE-insulated coaxial and triaxial cables can operate at a maximum conductor of 80 °C. If higher temperature operation is required, then a special cable with a high-temperature insulation such as silicone rubber or polytetrafluoroethylene and perhaps a fiberglass jacket could be specified, but such a cable would be very expensive.

Copyright © 2005 IEEE. All rights reserved.
Copyright The Institute of Electrical and Electronics Engineers, Inc.
Provided by IHS under license with IEEE
No reproduction or networking permitted without license from IHS
Not for Resale

7.5 Auxiliary coupling devices

In most PLC applications, paralleling carrier equipment is a requirement. With the increased use of wide-band coupling methods, all carrier facilities connected to a given power line can be served by a single coaxial cable.

Whenever two or more carrier terminals are connected to a wide-band path, some form of auxiliary coupling device, hybrid, L/C unit, bandpass filter or high-/low-pass filter, is required to prevent undesirable interaction such as the following:

a) *High-level intermodulation distortions*: These distortions result when two or more transmitters are connected to operate in parallel on adjacent frequencies. When the energy from one transmitter flows into the output amplifier stage of another transmitter, the transmitter's amplifier will operate in a nonlinear region that results in mixing of primary frequencies that generate harmonics. These unwanted frequencies can interfere with other carrier terminals on the same line, and the results can be severe.

b) *Low-level intermodulation distortions*: Sometimes protective devices such as shunt diodes are connected between a carrier receiver input filter and its line terminals. Because of the nonlinearity in the diodes, out-of-band signals can create intermodulation products that cause in-band interference. The amount of interference depends on frequency spacing, roll-off characteristics of the receiver filter, signal amplitude, and type of modulation.

c) *Bridging losses*: Most carrier receivers have sufficiently high input impedance that excessive bridging losses are avoided without special preventive means. However, the output circuitry of carrier transmitters does not usually provide an out-of-band impedance sufficiently high that other frequencies can be used indiscriminately.

d) *Transient influence*: Receiver input filters are generally not capable of carrying high transient currents such as those produced by disconnect switch arcs. Inductive elements in the filter are frequently saturated by such high currents, and the filter momentarily passes high-level broad-band noise, which can cause overload and saturation of the receiver's electronic circuitry.

7.5.1 Hybrids

A hybrid is a transformer or combination of transformers that is designed to be connected to three circuit paths. The hybrid is basically a bridge circuit. When a carrier transmitter operates at a frequency very close to that of another transmitter or receiver, the selectivity requirements are often so demanding that ordinary filters cannot provide enough isolation to prevent intermodulation and interference. Hybrids provide isolation between some circuit paths and impedance matching for others. Hybrids are available in several configurations. The most frequent types are the balanced resistive, skewed, and balanced reactive. In a typical application for a balanced resistive hybrid, two transmitters are connected to separate input terminals of the hybrid such that their combined signals pass from the hybrid to the line. With proper balance in the hybrid, a high degree of isolation is achieved between the two input terminals connected to the transmitters. This isolation is called "trans-hybrid loss" and is typically 20 dB or more throughout a usable band of frequencies. Signals entering the output terminal of the hybrid split their power equally coming out of the two input terminals. A loss of slightly more than 3 dB is encountered by signals passing through a balance hybrid. The circuit for a balanced resistive hybrid is shown in Figure 51.

Where a transmitter and a receiver are coupled to the power line, a skewed hybrid is frequently used. This hybrid is a modification of the Wheatstone Bridge circuit, where unequal amounts of power are divided between a source and a sink. This unsymmetrical device favors its transmitter terminal. The transmitted signal is attenuated by only about 0.4 dB in passing through a skewed hybrid. Attenuation to the receiver terminal is usually about 12 dB. The isolation between the transmitter and the receiver terminals depends directly on the return loss at the output terminal. The higher loss between the output and the receiver terminals does not degrade the SNR at the receiver because both signal and noise are reduced by equal amounts. The circuit for a skewed hybrid is shown in Figure 52.

Copyright © 2005 IEEE. All rights reserved.

Copyright The Institute of Electrical and Electronics Engineers, Inc.
Provided by IHS under license with IEEE
No reproduction or networking permitted without license from IHS
Not for Resale

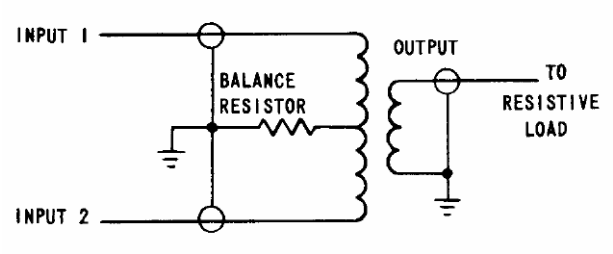

Figure 51—A balanced resistive hybrid

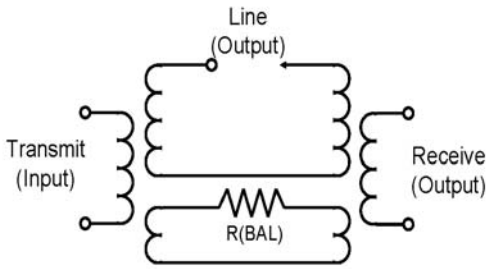

Figure 52—A skewed hybrid

A balanced reactive hybrid interfaces with the line tuner. It provides a degree of reactive control such that the effective resistive load is presented to the hybrid, even though the input impedance of the line tuner has a reactive component.

In a theoretical sense, balancing a hybrid requires that the balance network have an impedance characteristic that matches the line impedance closely at all frequencies within the range of interest. In practice, a corrective network is usually adjusted to cancel the reactive component of the line impedance, and the transformer ratio is adjusted to take care of the magnitude.

The precision of balance obtainable with an adjustable reactance hybrid (trans-hybrid loss between the two equipment terminals) is sometimes greater than 60 dB at a single frequency. However, this degree of balance is not normally available over a significant band of frequencies, and in addition, it may deteriorate from time to time as line impedance changes with temperature and other variables. The circuit for a balanced reactive hybrid is shown in Figure 53.

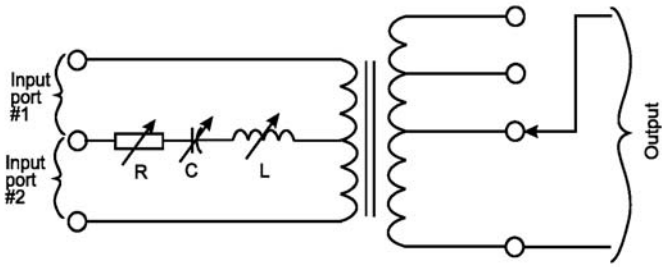

Figure 53—A balance reactive hybrid

Copyright © 2005 IEEE. All rights reserved.
Copyright The Institute of Electrical and Electronics Engineers, Inc.
Provided by IHS under license with IEEE
No reproduction or networking permitted without license from IHS
Not for Resale

An example showing the interconnection of several hybrids is shown in Figure 54. For this example, signals of transmitters T1 and T2 lose 6.5 dB to 8.0 dB in reaching the coaxial cable to the line tuner, and the signal of T3 loses 3.5 dB to 4.0 dB. The receivers lose about 15.5 dB between the coaxial cable and their inputs.

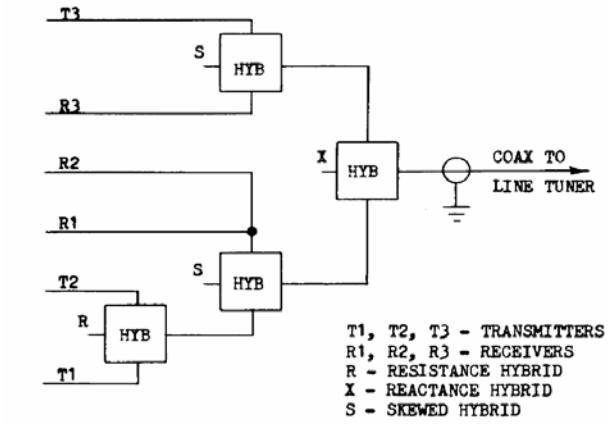

Figure 54—Hybrid interconnections

7.5.2 Series L/C

There are many instances when it is possible to reduce the coupling losses encountered with hybrid combining by using series L/C units. The magnitude of the loss is dependent on the L/C ratio, frequency, and frequency spacing of the carrier terminals. Some carrier terminal equipment may be equipped with internal L/C units. Different values of capacitors and inductors in the various L/C units affect maximum power ratings at different frequencies; therefore, the manufacturer's application guidelines are required.

Series L/C units give better isolation under varying load conditions than do hybrids. A load variation of 3 to 1 may change the isolation of a hybrid from 30 dB to 40 dB to 12 dB, whereas the same variation may change the selectivity of a series L/C circuit by 3.5 dB to 5.0 dB at the 15 dB attenuation points.

The bandwidth coupled into a 50 Ω coaxial cable circuit through a typical series L/C unit is dependent on the L/C ratio and the resonant frequency at which the unit is tuned. For example, the capacitance setting may be provided to permit 3 dB bandwidths from approximately 1 kHz to 8 kHz when tuned to 50 kHz or from 17 kHz to 60 kHz when tuned at 400 kHz. For a given center frequency, a higher L/C ratio provides more selectivity at the expense of a slightly higher insertion loss. An example of frequency separation with series L/C units is shown in Figure 55.

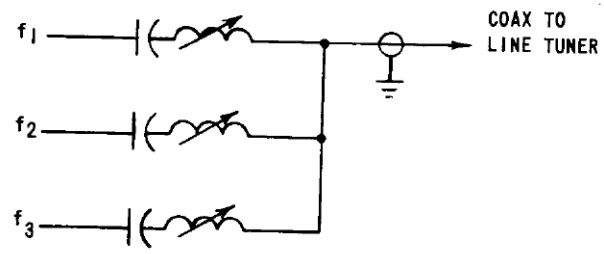

Figure 55—L/C unit frequency separation

Copyright © 2005 IEEE. All rights reserved.

Copyright The Institute of Electrical and Electronics Engineers, Inc.
Provided by IHS under license with IEEE
No reproduction or networking permitted without license from IHS
Not for Resale

7.5.3 Bandpass

When the process of frequency separation requires more selective or higher out-of-band impedance than series L/C units can provide, more elaborate filters are used. These special filters dampen the disconnect-switch disturbance and other high-level transients that require high out-of-band rejection, particularly to frequencies above the carrier band. Predominant frequencies in arc noises are determined largely by the electrical length of the switchyard bus segments connected to the arcing switch. These range generally from around 500 kHz to about 2 MHz.

The bandpass filter is usually the choice for separating transmitters for SSB applications. The type of bandpass filter depends on frequency spacing, power level, and bandwidth required. The bandpass filter is designed to attenuate frequencies on either side of the frequency band of interests. The bandwidth of a filter is the difference between the limiting frequencies at which the desired fraction (usually half-power or 3 dB) of the maximum output is obtained. An example of the bandpass filters response is shown in Figure 56, and a typical circuit of a bandpass filter is shown in Figure 57.

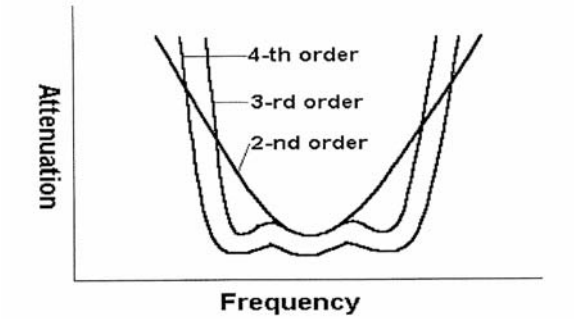

Figure 56—Bandpass filter response

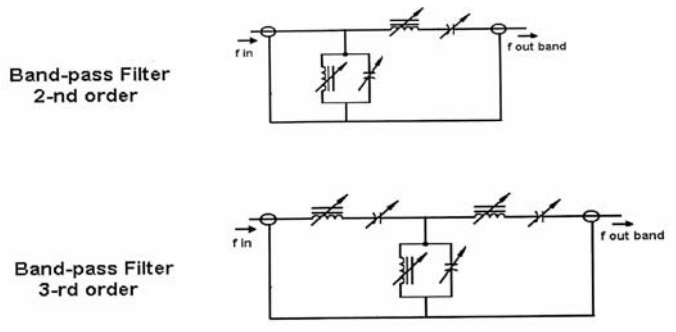

Figure 57—Typical bandpass circuit

7.5.4 Low pass/high pass

The least loss method of combining transmitters with the required isolation in PLC systems is by using a low-pass/high-pass filter. The low-pass filter is designed to pass all frequencies below a specified frequency with little or no loss but discriminates strongly, because of its sharp rolloff, against higher frequencies. The high-pass filter has a complementary characteristic to the low-pass filter. These filters have less than 0.5 dB insertion loss and typically less than 0.25 dB in the passband. The return loss is typically greater than 20 dB in the passband. An example of the low-pass filter typical circuit is shown in Figure 58, and the response of a low-pass filter is shown in Figure 59. The high-pass complementary circuit and response are shown in Figure 60 and Figure 61.

--`,,`,,`,-`-`,,`,,`,`,,`---
Copyright © 2005 IEEE. All rights reserved.
Copyright The Institute of Electrical and Electronics Engineers, Inc.
Provided by IHS under license with IEEE
No reproduction or networking permitted without license from IHS
Not for Resale

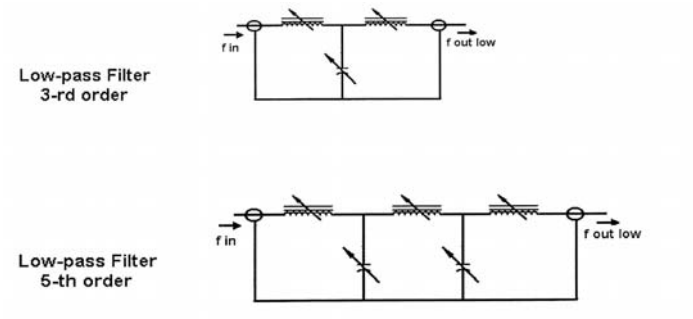

Figure 58—Typical low-pass circuit

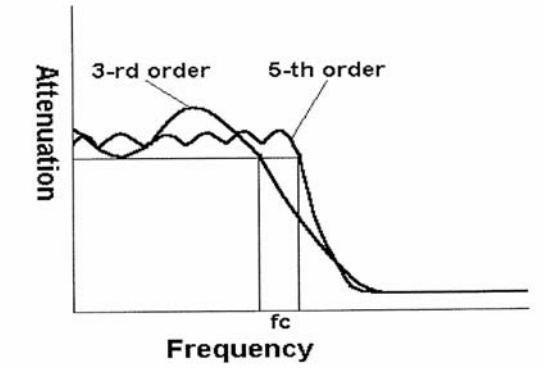

Figure 59—Low-pass filter response

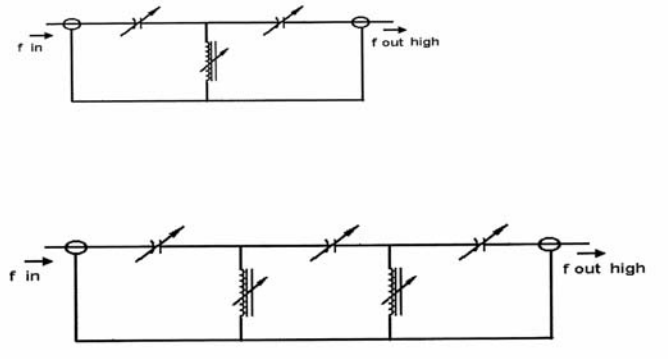

Figure 60—Typical high-pass circuit

Copyright © 2005 IEEE. All rights reserved.

Copyright The Institute of Electrical and Electronics Engineers, Inc.
Provided by IHS under license with IEEE
No reproduction or networking permitted without license from IHS
Not for Resale

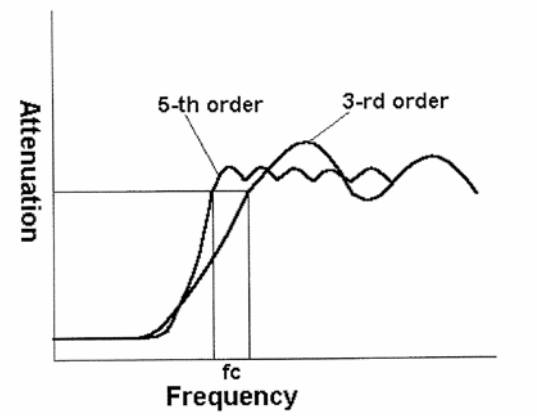

Figure 61—High-pass filter response

Some benefits can be obtained from low-pass filters connected in series with the main coaxial cable. However, the most effective reduction of high noise influence on a given receiver results from a highly selective bandpass filter in series with the coaxial cable connected to the receiver or receiver assembly, which is particularly helpful for FSK transferred-trip applications.

Design values of highly selective constant *K* bandpass filters include extremely low-inductance shunt elements (for example, less than 1.0 mH). The availability of such low-inductance units of satisfactory current rating is limited. The incorporation of step-up impedance transformation into the filter design can provide relief from this problem by changing the required shunt inductance to a higher, more practical value. If the ratio of impedance transformation is selected properly, a half-section filter can be terminated directly into the input of a high-impedance receiver. Such high-impedance circuits should be placed near the receiver. As an example, separation of the whole coupled frequency band into high-, medium-, and low-frequency sub-bands may be accomplished with a circuit of the form shown in Figure 62.

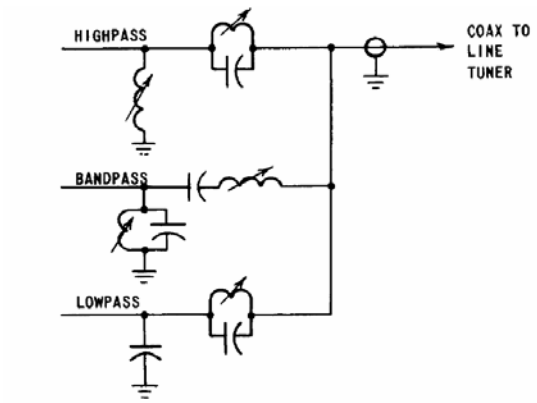

Figure 62—Frequency separation with coordinated half-section filters

These filters may be constructed with standard modular line tuner components in arrangements that the user can design based on textbook methods. Standard components are well suited for the construction of special filters because the cores in variable inductors are specifically designed to let the coil carry relatively high currents with a minimum of saturation and detuning. Some manufacturers offer custom-designed filter assemblies and can provide technical assistance or advice concerning what is needed for a given situation.

Copyright © 2005 IEEE. All rights reserved.
Copyright The Institute of Electrical and Electronics Engineers, Inc.
Provided by IHS under license with IEEE
No reproduction or networking permitted without license from IHS
Not for Resale

7.6 Coupling components selection

The choices of coupling components depend on the practices of the utility because line traps and coupling capacitors and CCVTs can be part of the line construction. CCVTs are used for metering and relaying as well as for PLC applications. The capacitance of the coupling capacitor or CCVT depends on the line voltage. Extra-high capacitance units are available that typically have about three times the capacitance of a standard unit. An extra-high capacitance unit may be required for a power cable application where the bandwidth requirements for coupling several protection functions cannot be satisfied with available LTUs and standard coupling capacitors or CCVTs.

Unless a very wide band of frequencies is to be coupled to an overhead line, a standard CCVT value and a resonant or wide-band LTU will suffice. It is more economical to choose a more complex LTU than to purchase an extra-high capacitance CCVT for coupling to an overhead line. Refer to the formulas in 7.3 to determine the most economical approach.

It is also possible to couple a wider bandwidth than needed if the coupling capacitance is too large for the application. This process can occur especially at low line voltages and at fairly high PLC frequencies. One should keep in mind that it is not a good idea to have a wider bandwidth than needed. The wider bandwidth will allow more energy to be seen by the PLC receiver filters. This energy is in the form of white noise and high-frequency–high-energy transients. The white noise will be attenuated by the receiver filter. However, the high-frequency–high-energy transient can cause ringing in the receiver filter that could cause a misoperation. The narrower the line tuning filter, the more transient energy is filtered out before being presented to the PLC receiver filter, which thus possibly prevents the receiver filter from ringing.

The most common coupling is single phase-to-ground with either a single-frequency LTU or a wide-band LTU. Using available information, it is possible to determine if either of these units is adequate. The bandwidth requirements depend on the number and spacing of the transmitters and receivers on the line section. The bandwidth should encompass the frequencies of all of the transmitters and receivers with a return loss greater than 12 dB. A reasonable margin of 5% to 10% should be considered to allow for tolerances and possible frequency changes.

A resonant single-frequency line tuner may be adequate for an application, although several functions are being coupled. A bandwidth that is too wide will desensitize the tuning of the tuner elements. In some cases, the effective coupling capacitance should be reduced by inserting a capacitance in series with the tuning inductance to reduce the coupled bandwidth. The blocking bandwidth of the line trap should be checked to ensure that the minimum blocking impedance matches that of the line tuners.

The resonant two-frequency line tuner may be used when the assigned frequencies of two functions are spaced 25% or greater from each other. The practical limit of the upper frequency may depend on the availability of line trap tuning packs. The manufacturer can furnish this information, as well as data on blocking impedance at specific frequencies. The two-frequency tuner has a higher insertion loss than a single-frequency tuner with the same CCVT or coupling capacitor. The bandwidth of the two branches is considerably narrower than the single-frequency tuner. Also, isolation between the two inputs is determined by the blocking bandwidth of parallel LC circuits in the two branches. The two-frequency tuner will usually give an adequate performance for two functions. When additional functions are added to either of the two inputs, the tuner response should be checked for isolation and for reflected power.

The two-frequency tuner primarily reduces the coupling losses, which are caused by hybrid combining of transmitters' and receivers' single-frequency or wide-band coupling circuits. When additional functions are added to two-frequency coupling circuits, the added losses may eliminate the low-loss advantage of a two-frequency tuner. The complexity of a two-frequency tuner adds to its cost in terms of components and tuning time, in which a wide-band tuner of less complexity and cost may be adequate for the application.

Copyright © 2005 IEEE. All rights reserved.

Copyright The Institute of Electrical and Electronics Engineers, Inc.
Provided by IHS under license with IEEE
No reproduction or networking permitted without license from IHS
Not for Resale

The line trap used with a two-frequency line tuner will most likely be a two-frequency unit, although a wide-band trap may be used if its bandwidth is adequate. A wide-band line tuner and line trap are required when the coupled bandwidth of a single-frequency tuner is not adequate for the number of functions coupled, and their frequencies will not allow a two-frequency scheme to work. Wide-band coupling also adds flexibility for frequency changes and additions to the PLC system. A single-frequency line tuner can be converted to a wide-band line tuner by adding a shunt parallel circuit. Adding other resonant circuits will increase the line tuner bandwidth even more. The line trap blocking bandwidth should be checked for matching with the line tuner bandwidth for shunt loss considerations and for tuning of the coupling circuit.

Most power cable applications involving more than two functions require wide-band line tuners. Because the bandwidth of the line tuner is a function of line impedance and resonant frequency, the bandwidths of power cable tuners may be 10 to 30 times more narrow than a comparable overhead line unit. The wide-band tuner should always be used with a wide-band line trap. Wide-band tuning allows the use of hybrids, series L/C units, bandpass filters or high-pass/low-pass filters in the coupling circuit. The insertion loss of the wide-band tuner depends on the frequency band, the bandwidth, and the number of resonant circuits.

Line trap manufacturers provide wide-band traps with fixed frequency bands or with adjustable tuning packs. Although most line traps are 0.265 mH, other inductances up to 2 mH are available to allow for a very wide band of blocking impedances. The power frequency losses of higher inductance line traps are an additional consideration because the ohmic losses present a constant cost for utilities. Coupling a very wide band of frequencies is not widely practiced in the United States.

8. Performance calculations

8.1 Factors involved in channel performance calculations

Two basic principles govern satisfactory channel performance. The calculations required to assure that a PLC channel perform satisfactorily require knowledge of the sensitivity of the receiver, the power output of the transmitter, the noise level to which the signals will be subjected, and the losses of the elements of the channel. This information calculates the relative magnitude of the signal compared with the noise, and it is called the SNR. The level of the signal transmitted by the transmitter must be high enough to overcome the series and shunt losses described in 4.2 and to arrive at the receiver input with a certain SNR to assure that the system will operate satisfactorily over varying weather, switching, and system conditions.

The receiver must have enough margin to overcome decreases in signal levels and increases in noise levels and to continue to operate properly. The additional attenuation caused by line faults must be overcome by some channels that are required to operate during fault conditions. The noise types were covered in 5.4 and will not be discussed here except for their effects. The signaling function, the type of transmitter/receiver, and the receiver design will determine whether impulse or random noise is more important. Because random noise is more predictable and exists over the entire length of the line, this type of noise lends itself to making a prediction of the channel performance. The condition of hardware, such as insulators, bushings, and other hardware, as well as localized electrical storms can cause higher noise levels at specific locations over at any one period. This noise will incur the same loss as the desired signals before reaching the receiver.

Interfering signals from other communications equipment can also cause misoperation of a PLC receiver. Two examples are as follows:

a) Beat frequencies caused by intermodulation with adjacent PLC transmitters not having adequate isolation from the each other

b) Alien frequencies that may be in the same frequency band as the affected receiver

Copyright © 2005 IEEE. All rights reserved.
Copyright The Institute of Electrical and Electronics Engineers, Inc.
Provided by IHS under license with IEEE
No reproduction or networking permitted without license from IHS
Not for Resale

These frequencies may be from quiescent equipment, such as blocking channels whose signals are only present at intermittent times and may vary in level depending on channel operating conditions including testing during quiescent periods.

Frequency spacing between equipment located at the same terminal must be considered as well as interference with other transmitters or receivers at nearby stations close to this operating frequency. This task requires a knowledge of channel selectivity, isolation obtainable with combining and isolation elements, circuits characteristics such as return loss or reflected power values for application of hybrids, cross-station isolation by line trap placement, and coupling to adjacent lines and busses.

Receiver noise tolerance is given in terms of the minimum permissible SNR, which is expressed in decibels. The SNR is the difference in the signal level and the noise level, or

SNR(dB) = signal level (dBm) – noise level (dBm)

A graphical representation of the signal and noise level on a transmission line is shown in Figure 63. Because the signal and the noise are both attenuated by the coupling equipment at the receive end of the circuit, the SNR does not change from the line side of the coupling capacitor to the receiver input.

Another consideration for planning frequency assignments on PLC channels is the behavior of line loss and noise across a wide band of frequencies. As shown in Figure 63, the line attenuation increases with increasing frequency while the noise level for fair weather conditions decreases with increasing frequency. The consideration for using either low frequencies or high frequencies may relate to the amount of attenuation tolerable for the function being considered to give an adequate SNR or operating margin. Very long lines may require low frequencies for achieving an acceptable SNR or margin. For planning purposes, the manufacturer will give a recommended value for both. Higher power transmitters is an option for long lines to overcome line and channel losses. Also, frequency programmable transmitters and receivers allow frequency changes to be made easily if line losses or interference dictates a change in frequency. Typical permissible SNR values for modern PLC equipment are given in Table 18.

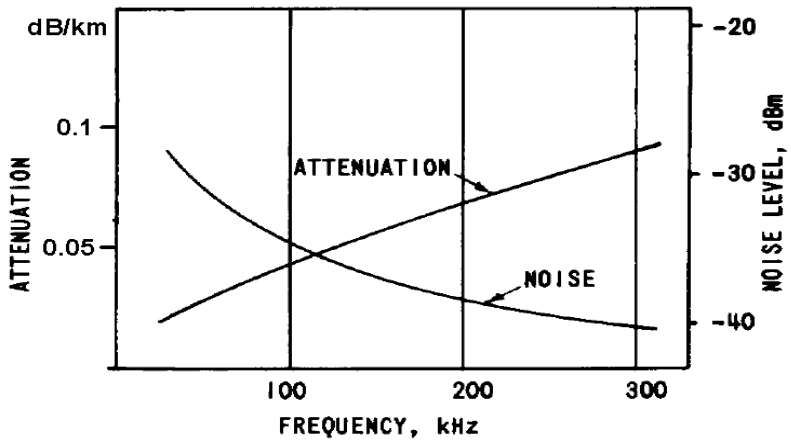

Figure 63—Signal level and noise level relationship on a typical 500 kV transmission line

Copyright © 2005 IEEE. All rights reserved.

Copyright The Institute of Electrical and Electronics Engineers, Inc.
Provided by IHS under license with IEEE
No reproduction or networking permitted without license from IHS
Not for Resale

Table 18—SNRs

Function	Modulation	SNR[a] (dB)	In-band SNR (dB)
Telemetering/data			
60 baud	FSK	5	20
300 baud	FSK	10	20
1200 baud	FSK	15	20
Relaying			
Line protection	AM (ON–OFF)	15–20	13[b]
Line protection	FSK	10	13
Transferred trip			
Slow speed	FSK	0–5	13
Medium speed	FSK	3–7	13
High speed	FSK	5–10	13
Voice	SSB FM	25–30 25	25–30 25

[a]Based on 3 kHz bandwidth noise measurement.
[b]SNR should be higher than the receiver sensitivity margin setting.

It should be noted that for some equipment, the limiting application condition will be receiver sensitivity, and for other equipment, it will be noise. Illustration of the first limitation requires a definition of sensitivity margin setting. It is customary to adjust the receiver's ON and ON–OFF PLC relaying channel for a standard sensitivity margin between 12 dB and 15 dB. Higher margins are sometimes used by some utilities, which means that the sensitivity setting will allow the receiver to operate with a reduction of signal level equal to, but not greater than, this amount. In the illustrative example of Figure 64, a minimum received level of +10 dBm would satisfy the 20 dB minimum SNR requirement, but a received signal of +15 dBm is required to provide a 15 dB sensitivity margin. Figure 65 illustrates the second situation in which noise is the limiting factor. In this example, receiver sensitivity is adequate, but the total path loss must be limited to that value, which will provide an SNR that permits adequate intelligibility in the voice circuit. For single-function equipment, channel performance is relatively straightforward, once path loss and noise are known. The total power of the transmitter is dedicated to performing a single function, and its output directly represents the available power. There is no sharing of the power amplifier with other functions.

Multifunction, multichannel equipment (usually SSB) requires a predefinition or assignment of each function relative to other functions sharing the same power amplifier output capabilities. A 10 W power amplifier cannot generate two 5 W signals without distortion. The sharing that must be done to maintain the linearity for this power amplifier is done on a voltage basis instead of on a power basis. This condition would dictate that the two signals would be required to operate at one half the maximum output voltage of the amplifier to remain in the operating range of the amplifier, which would give only one fourth of the power rating of the amplifier in each signal. This loading is common for multifunction channels. As the number of functions increases, the power in each function is reduced. Functions that do not operate at the same time may be set at different levels considering the actual signals present. Some terminals switch off all functions except protection channels in the event of a fault or will increase the levels of the protection signals while restricting the nonprotection signals.

Copyright © 2005 IEEE. All rights reserved.
Copyright The Institute of Electrical and Electronics Engineers, Inc.
Provided by IHS under license with IEEE
No reproduction or networking permitted without license from IHS
Not for Resale

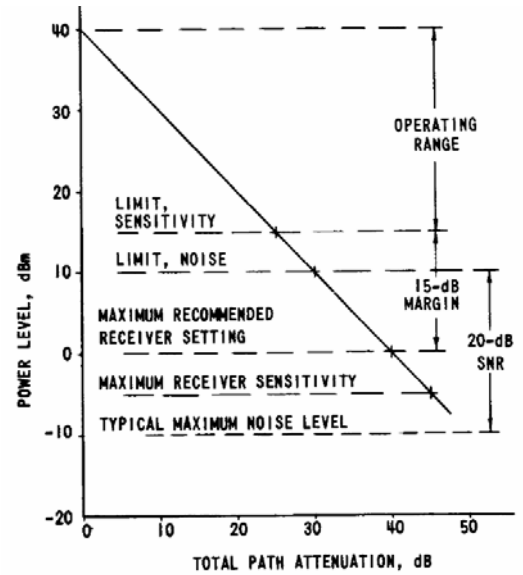

Figure 64—Operating range limitations on an ON–OFF carrier channel

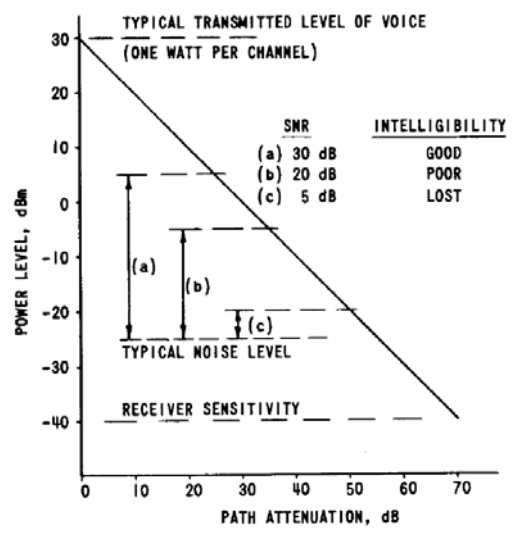

Figure 65—Operating range of SNR of a multifunction carrier channel

The manufacturer of multifunction equipment will usually recommend a specific level setting for each function, usually based on a reference pilot setting, so that the power amplifier output voltage is not exceeded. An analysis of the individual signals or functions can be made to determine if the SNR of each function is satisfactory. The power in each function can be increased for multifunction systems, and redundancy can be increased with low-level combining of the functions and with parallel linear power amplifiers.

Copyright © 2005 IEEE. All rights reserved.

Copyright The Institute of Electrical and Electronics Engineers, Inc.
Provided by IHS under license with IEEE
No reproduction or networking permitted without license from IHS
Not for Resale

8.2 Single-function individual-channel case

A typical protective relaying PLC channel configuration using single-function equipment for each relaying channel is shown in Figure 66. The ON–OFF channel at frequency F1 would be used for line protection, and the FSK function using one channel in each direction is used for transfer-trip relaying. Dual FSK channels at each station can improve system security and dependability and can offer a means of testing the channels. Because impulse noise, bad weather, icing, and line faults can be critical to high-speed relaying, conservative practice usually demands greater operating margins and SNRs than for less critical functions. PLC relaying functions are, therefore, examined very closely. Total path attenuation is calculated with an appropriate modal analysis method, depending on the length and complexity of the line and the coupling, and the coupling losses for coupling components are considered. The manufacturer's equipment specifications are considered along with the noise data for the line being studied to predict the overall channel performance.

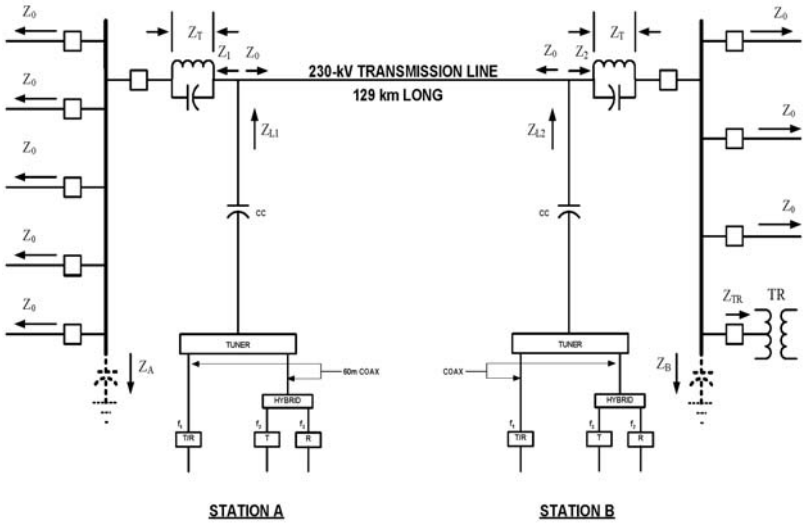

Figure 66—Application for single-function individual carrier channels

The parameters associated with the PLC configuration in Figure 66 are as follows. The three frequencies f1, f2, and f3 are 100, 140, and 141.5 kHz, respectively. The line tuner at each station is a two-frequency resonant type operating with a 0.003 μF coupling capacitor and a fixed wide-band line trap that provides 400 Ω blocking impedance Z_T at each frequency. The phase-to-ground characteristic impedance Z_0 of each 230 kV line terminating in each station is 400 Ω. The bus impedance Z_A at station A is assumed to be 600 Ω and Z_B at station B is 700 Ω. The power transformer impedance Z_{TR} at station B is assumed to be 1000 Ω at each channel frequency. For this example, the manufacturer's performance specifications stipulate are as follows.

The PLC signal attenuation calculation requires that the losses caused by each PLC coupling component or assembly be determined, and that each power system element also be determined and that the arithmetic sum be obtained. This sample calculation will show these losses as they are encountered by a signal originating at station A and traveling to the receiver at station B.

Copyright © 2005 IEEE. All rights reserved.
Copyright The Institute of Electrical and Electronics Engineers, Inc.
Provided by IHS under license with IEEE
No reproduction or networking permitted without license from IHS
Not for Resale

At station A, two hundred 60 m of coaxial cable at 100 kHz has a loss of 0.11 dB (Figure 66). The two-frequency line tuner loss and the coupling capacitor loss are dependent on the equivalent load impedance Z_{L1} and the capacitance of the coupling capacitor. The value of Z_{L1} is calculated from the parallel combination of Z_0 and Z_1. Z_1 consists of Z_T in series with the parallel combination of the five lines and the equivalent bus impedance of station A. The bus impedance is capacitive and is caused by the capacitance to ground of the bus insulators and other equipment insulator bushings. All impedances are treated as if they all have the same phase, although this is not strictly correct. Thus,

$$Z_1 = Z_T + \frac{1}{5/Z_0 + 1/Z_A} = 400 + \frac{1}{5/400 + 1/600} = 470\ \Omega$$

$$Z_{L1} = \frac{Z_0 Z_1}{Z_0 + Z_1} = \frac{400 \times 470}{400 + 470} = 216\ \Omega$$

From Figure 67, at 100 kHz, the coupling loss for a single-frequency resonant tuner with a 216 Ω load impedance and a 0.003 μF coupling capacitor is approximately 0.5 dB. The insertion loss of a two-frequency line tuner is approximately twice that of a single-frequency tuner. Thus, the coupling loss is 1.0 dB for this tuner. Next, the shunt loss caused by the line trap and the bus in the direction of Z_1 is found with

$$\mathrm{dB_{LOSS}} = 10\log\left|\frac{Z + Z_S}{Z_S}\right|$$

(from 5.2.5.5).

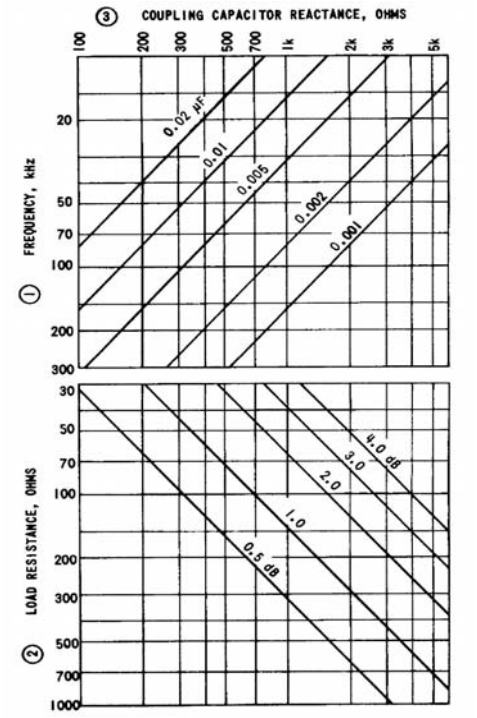

Figure 67—Coupling loss with a resonant single-frequency line tuner

Copyright © 2005 IEEE. All rights reserved.

Copyright The Institute of Electrical and Electronics Engineers, Inc.
Provided by IHS under license with IEEE
No reproduction or networking permitted without license from IHS
Not for Resale

$$dB_{LOSS} = 10\log\frac{Z_0 + Z_1}{Z_1} = 10\log\frac{400 + 470}{470} = 2.67\,dB$$

The line attenuation is found using Figure 11 and Table 3 and Table 4. The total line attenuation for fair-weather conditions is as follows:

where

(dB/km) × (km) × (line voltage multiplier) + (coupling correction)
+ (transposition correction) = line attenuation

$$0.06 \times 128 \times 0.78 + 1.0 + 0 = 6.99\ dB$$

For adverse weather conditions the total line attenuation is

$$0.06 \times 128 \times 0.98 + 1.0 + 0 = 8.53\ dB$$

The shunt loss at the receiving end is found from

$$dB_{LOSS} = 10\log\frac{Z_0 + Z_2}{Z_2} \tag{53}$$

where

$$Z_2 = Z_T + \frac{1}{3/Z_0 + 3/Z_B + 3/Z_{TR}} = 500\ \Omega$$

Thus, the shunt loss is

$$10\log\left(\frac{400 + 500}{500}\right) = 2.55\,dB$$

The coupling loss is dependent on Z_{L2}

$$Z_{L2} = \frac{Z_0 Z_2}{Z_0 + Z_2} = \frac{400 \times 500}{400 + 500} = 222\ \Omega$$

From Figure 67, at 100 kHz, with a 222 Ω load, and coupling capacitor = 0.003 μF, the single-frequency line tuner loss is approximately 0.5 dB, and doubling this loss for a two-frequency tuner gives a coupling loss for the receive end of 1.0 dB approximately. The loss for the coaxial cable is the same as at station A, or 0.11 dB.

The results are given in Table 19 for the ON–OFF channel at 100 kHz. All entries are rounded to the nearest tenth of a decibel. A subtotal is calculated for the attenuation from the transmitter at station A to the line side terminal of the coupling capacitor at station B. This subtotal is to be used in the SNR calculation, because the signal and the noise are both attenuated equally from this point.

Copyright © 2005 IEEE. All rights reserved.
Copyright The Institute of Electrical and Electronics Engineers, Inc.
Provided by IHS under license with IEEE
No reproduction or networking permitted without license from IHS
Not for Resale

Table 19—ON–OFF PLC channel losses

Channel component	Loss (dB)	
	Fair weather	Adverse weather
Coaxial cable	0.1	0.1
Coupling (2-frequency tuner)	1.0	1.0
Shunt loss	2.7	2.7
Line attenuation	7.0	8.5
Subtotal	10.8	12.3
Shunt loss	2.6	2.6
Coupling loss	1.0	1.0
Coaxial cable	0.1	0.1
Total loss	14.5	16.0

The accuracy of this calculation is only within 1 dB at best, although the results are shown to the nearest tenth of a decibel. This same procedure is followed to calculate the losses for the FSK channels with a channel frequency of 140 kHz instead of 100 kHz. Also, an RF skewed hybrid is at each location with a loss of approximately 0.5 dB at the transmitter and about 13 dB at the receiver end of the circuit. The summary of losses for the FSK circuit is given in Table 20.

Table 20—FSK PLC channel losses

Channel component	Loss (dB)	
	Fair weather	Adverse weather
Skewed hybrid	0.5	0.5
Coaxial cable	0.1	0.1
Coupling (two-frequency tuner)	0.8	0.8
Shunt loss	2.7	2.7
Line attenuation	8.8	10.8
Subtotal	12.9	14.9
Shunt loss	2.6	2.6
Coupling loss	0.8	0.8
Coaxial cable	0.1	0.1
Skewed hybrid	13.0	13.0
Total loss	29.4	31.4

Copyright © 2005 IEEE. All rights reserved.

Copyright The Institute of Electrical and Electronics Engineers, Inc.
Provided by IHS under license with IEEE
No reproduction or networking permitted without license from IHS
Not for Resale

Noise levels can be estimated from Figure 17. The conditions assumed for this example are for fair weather, –35 dBm at 100 kHz and –36 dBm at 140 kHz; and for adverse weather, –18 dBm at 100 kHz and –19 dBm at 140 kHz.

Operating ranges and minimum SNRs for the equipment were given at the beginning of the section. It completes the information necessary to calculate the predicted performance of these single-function channels. To illustrate the performance of the channels, Figure 68 and Figure 69 show operating margins and SNRs. For the ON–OFF channel, the total adverse weather attenuation of 16 dB is well within the operating range of 40 dB for this equipment and will easily allow the receiver to be set with a 15 dB margin.

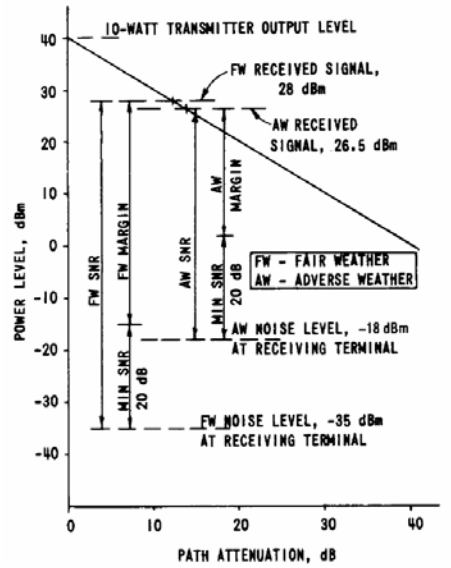

Figure 68—AM carrier channel performance, all received levels are referenced to the HV terminal of the coupling capacitor

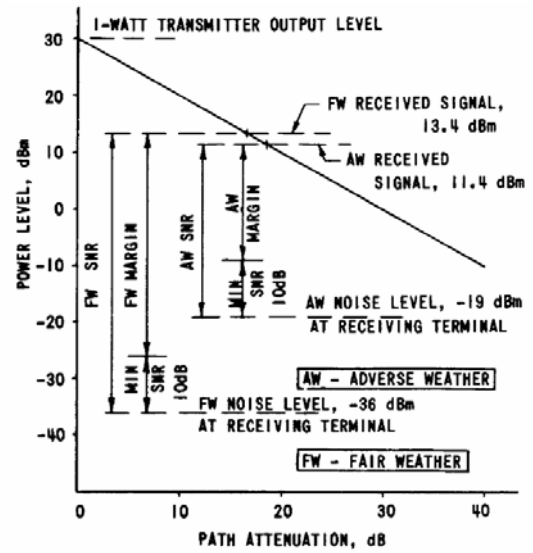

Figure 69—FSK carrier channel performance

Copyright © 2005 IEEE. All rights reserved.
Copyright The Institute of Electrical and Electronics Engineers, Inc.
Provided by IHS under license with IEEE
No reproduction or networking permitted without license from IHS
Not for Resale

The adverse weather SNR (Figure 68) is

$$SNR = (40 - 12.3) - (-18) = 27.7 + 18 = 45.7 \text{ dB}$$

The SNR is above the required minimum of 20 dB by a margin of 25.7 dB. This calculation shows that satisfactory operation is to be expected for the ON–OFF PLC channel at 100 kHz. For the 140 kHz channel, the adverse weather attenuation is 31.4 dB (Table 20). This value is well within the 60 dB operating range of this equipment. It should be remembered that line faults can cause additional attenuation on the line, and if tripping through a fault is required, this would leave a much smaller margin.

The adverse weather SNR for the FSK equipment shown in Figure 69 is

$$SNR = (30 - 14.9) - (-19) = 15.1 + 19 = 34.1 \text{ dB}$$

This SNR is above the acceptable minimum of 10 dB with a margin of 24.1 dB. These calculations show that both SNR and operating range for both types of single-function channels indicate a successful application.

8.3 Multifunction, multichannel case

8.3.1 Introduction

A 4 kHz noise bandwidth illustrates the SNR criteria, which usually limit the application of multifunction equipment. The three values that must be determined before the SNR of each function can be calculated are

a) Effective transmitted power
b) Path attenuation
c) Line noise

These values are discussed separately in the following paragraphs, and an example is given for calculating a typical SNR for three functions. The configuration of the PLC equipment for the example is shown in Figure 70. The parameters are similar to those given in the single-function example (Figure 66) except that the impedance of the 345 kV line is about 340 Ω. For the purpose of calculating the line attenuation, the line is 161 km long and has steel ground wires. The line tuner is a wide-band bandpass type. A carrier frequency of 128 kHz is assumed for the channel to be evaluated. This channel is to provide a voice circuit plus one tone for signaling to support the voice function. In addition, there will be four tones to carry relatively important telemeter readings at a 60 baud rate.

8.3.2 Effective transmitted power

From a modulation plan calculated for all channels and functions of Figure 70, the following values of effective power are derived from the manufacturer's data:

Voice	+26 dBm
Telemeter tones, each	+20 dBm
Signaling tone	+16 dBm

These values will determine the SNR after the signals have been subjected to the losses in the signal path in going from the transmitter at station A to the receiver at station B.

Copyright © 2005 IEEE. All rights reserved.

Copyright The Institute of Electrical and Electronics Engineers, Inc.
Provided by IHS under license with IEEE
No reproduction or networking permitted without license from IHS
Not for Resale

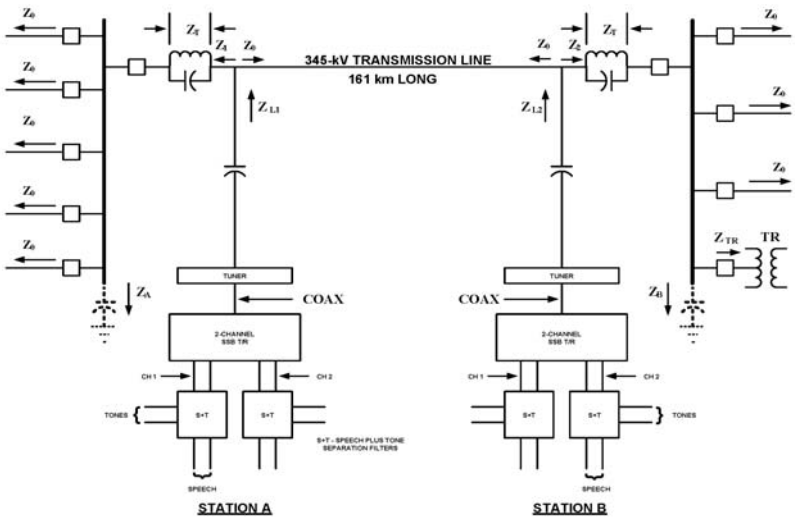

Figure 70—Application of multifunction carrier channels

8.3.3 Path attenuation

The total path attenuation comprises shunt coupling losses, shunt losses, and line attenuation. Computations to obtain these values are the same as in the single-function example and will not be repeated here. To obtain a full duplex circuit, two SSB channels are used (one in each direction). A skewed hybrid usually isolates the transmit channel from the receive channel, as in the single-function case. For this example, it is assumed that the combination of coupling loss and shunt loss at the transmit end at station A is 6 dB. The values for the transmit end are used only because the signal and the noise are both attenuated equally in the receive coupling circuit.

Values of line attenuation are 12 dB in fair weather and 15 dB in adverse weather.

8.3.4 Noise

Noise values (in a 3 kHz bandwidth) for both fair and adverse weather are required to determine if the SNR are acceptable for the functions in this application. The values used from Figure 17 are –34 dBm for fair weather and –17 dBm for adverse weather at 128 kHz.

8.3.5 Results of evaluation

The SNR for the different functions are calculated in a manner similar to those used for the single-function example. Pertinent relationships for the voice function are shown in Figure 71. The fair-weather SNR of 42 dB is very good, but the adverse SNR of 22 dB is not acceptable. Methods for improving this value are given in the following section. The SNR evaluation for the tones is performed only for the adverse weather case. The power level in the signaling tone is +16 dBm. The loss in the line and the transmit coupling losses will give a signal level at the receiver line trap of +16 dBm – 21 dB = –5 dBm. The SNR for this function is thus

$$\text{Signaling tone SNR} = -5 - (-17) = 12 \text{ dB}$$

The required SNR for a signaling function is about the same as for slow-speed (60 baud) data. From Table 18, this value is 5 dB, which gives a 7 dB margin for this function. The power allocated for each telemetering tone is +20 dBm, which is 4 dB higher than the signaling tone. A similar SNR calculation will give a margin of 11 dB for the telemetering tones. The application of the tones in this channel is adequate.

Copyright © 2005 IEEE. All rights reserved.
Copyright The Institute of Electrical and Electronics Engineers, Inc.
Provided by IHS under license with IEEE
No reproduction or networking permitted without license from IHS
Not for Resale

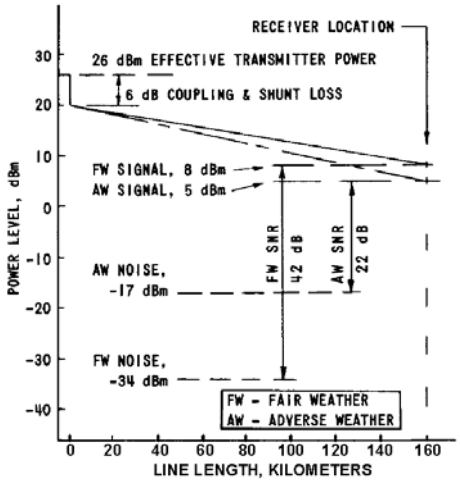

Figure 71—Single attenuation and SNR for the voice function chosen for illustration; received signals are referenced to the HV terminal of the coupling capacitor

8.3.6 Considerations for improvement

The methods for improving the SNR of the voice channel under adverse weather conditions include reallocating the power in each function so that the voice function has more of the voltage allocation of the power amplifier; using a compandor with the voice function, which effectively doubles the SNR up to about 50 dB; and increasing the transmitter output power. Reducing the power in each telemetering tone by 4 dBm to +16 dBm will allow the voice transmit level to be increased to about +31 dBm and will maintain the system linearity in the power amplifier. This result would raise the SNR in adverse weather to 27 dB, which is still a marginal value. A compandor will not require a redistribution of the signal levels and will raise the SNR to a minimum of 32 dB. This method is preferred for improving the SNR of a voice channel. This process requires a judgment decision by the evaluator to consider the system performance and the cost of the equipment, as well as the increase in radiated power associated with higher transmit levels. In this case, the margins of all functions are adequate and the problem with the voice function can be fixed with a compandor.

9. Special applications

9.1 Intrabundle channels

9.1.1 Basic concept

Intrabundle or bundled-phase communication channels can provide a means for sending PLC signals on a single phase of a power line without the need for a ground return path.

The approach involves the transmission of signals on two or more conductors within a multiconductor phase bundle in which the individual conductors are insulated from each other.

Theoretical and experimental work has been carried out on such channels. Experimental intrabundle lines have been operated in the USSR [B40]. Intrabundle channels are in actual operating status in both Norway and Bavaria.

Copyright © 2005 IEEE. All rights reserved.

Copyright The Institute of Electrical and Electronics Engineers, Inc.
Provided by IHS under license with IEEE
No reproduction or networking permitted without license from IHS
Not for Resale

9.1.2 Line configuration

Bundled conductors are normally used on 345 kV and higher voltage lines to reduce problems caused by corona discharges. Typically, conductive separators maintain separation between conductors in the phase bundle and equalize the voltage on all conductors in the bundle. To use a bundled-conductor phase as an intrabundle channel, insulated separators must be used, so that independent carrier currents can circulate in the subconductors in the phase bundle. The unavailability of insulated spacers currently represents a technical problem for the application in intrabundle systems. However, Brestkina [B40] reports on the use of 5000 glass-plastic spacers on an experimental line for a year and a half without failure.

At the terminal ends of an intrabundle channel, means must be provided to terminate the channel in its proper characteristic impedance, which could be performed with two line traps and two coupling capacitors at each end in a conventional approach, but a cumbersome mechanical arrangement would result. A more effective coupling is needed.

Hasler et al. [B87] suggested a quarter-wave coupling scheme for wide bandwidths over an intrabundle channel for frequencies in the range of 540 kHz to 2140 kHz. [Later studies indicate that for several contributing reasons, 1000 kHz is likely to be the practical upper limit (see the CIGRE Committee Report [B49]).] They also suggested the mounting of two coupling capacitors in a single porcelain, because both capacitors would be subject to the same line potential and a cost savings would result.

9.1.3 Experimental line

An experimental, single-circuit, horizontally spaced, 330 kV line, 61.4 km long, with two-wire insulated phase bundles, has been operated in the USSR as mentioned in 9.1.1. Glass-plastic spacers were installed approximately every 35 m along the line. Other line parameters were reported as shown in Table 21.

Table 21—Tower geometry

Phase separation	9.5	m
Subconductor separation	40.0	cm
Phase conductor height (at tower)	21.8	m
Ground wire height (at tower)	30.0	m
Ground wire spacing	12.2	m
Subconductor diameter	2.35	cm
Ground wire diameter	9.4	mm

Attenuation and cross-talk measurements were made on the experimental line when deenergized, and noise measurements were made on the energized line. The attenuation and cross-talk measurements were made with the test equipment coupled through large capacitance values to the line, whereas the noise measuring equipment was coupled through conventional coupling arrangements. These measurements covered the band from 30 kHz to 500 kHz.

Copyright © 2005 IEEE. All rights reserved.
Copyright The Institute of Electrical and Electronics Engineers, Inc.
Provided by IHS under license with IEEE
No reproduction or networking permitted without license from IHS
Not for Resale

9.1.4 Line characteristics

The calculated attenuation for the experimental intrabundle line described in 9.2.3 is shown in Table 22. Close correlation between measured and computed values was reported. For comparison, the dashed line represents a typical attenuation curve for a non-intrabundled center-phase-to-ground carrier channel. It can be observed that the intrabundle line attenuation is substantially lower.

Table 22—Intrabundle conductor configurations[a]

	Figure 73		
Parameter	**Curve A**	**Curve B**	**Curve C**
Intrabundle conductor spacing, cm	40	30	30
Subconductor diameter, cm	2.35	1.96	2.86
Aluminum cross-sectional area, mm^2	300	184	486
Steel core cross-sectional area, mm^2	28	43	63
Strands: aluminum/steel	36/1	30/7	54/7

[a]See Brestkina [B40] and Hasler et al. [B87].

Figure 73 contains the curve of Figure 72 (curve A) plus two additional calculated curves (B and C) for frequencies from 500 kHz to 2000 kHz (see Hasler et al. [B87]). The properties of the dual subconductors for each curve in Figure 73 are listed in Table 22. The subconductor of curve C has a much larger aluminum cross-sectional area than the subconductor of curve B, and hence, its attenuation is substantially lower.

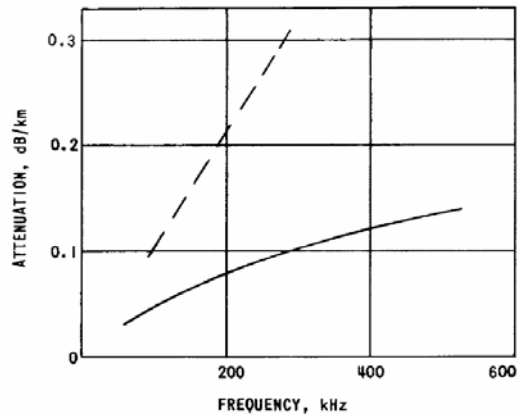

Figure 72—Intrabundle channel attenuation for a 300 kV line, dashed line-phase-to-ground attenuation for comparison

Table 23 tabulates calculated multiplying factors (see Brestkina [B40]) to account for additional attenuation in an intrabundle line resulting from the formation of a 2 cm thick ice coating on the subconductors. The attenuation increase is large.

Near-end cross-talk was measured on the experimental line between two intrabundle coupled phases and between an intrabundle channel and a phase-to-ground PLC channel on the same line. The mean value of measured attenuation was 60 dB between the two intrabundle channels and 40 dB between the intrabundle channel and the phase-to-ground channel. Far-end cross-talk attenuation is shown in Figure 74.

Copyright © 2005 IEEE. All rights reserved.

Copyright The Institute of Electrical and Electronics Engineers, Inc.
Provided by IHS under license with IEEE
No reproduction or networking permitted without license from IHS
Not for Resale

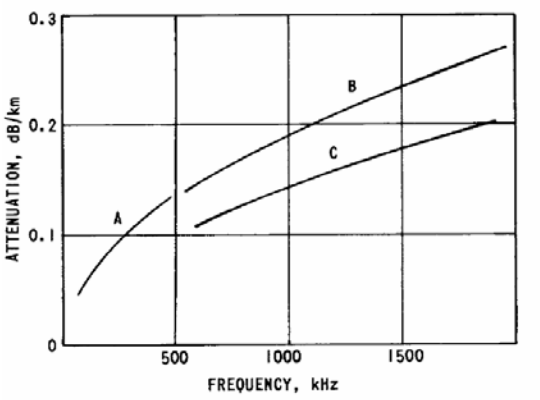

Figure 73—Calculated intrabundle channel attenuation with different conductors and spacings. conductors A, B, and C are identified in Table 22

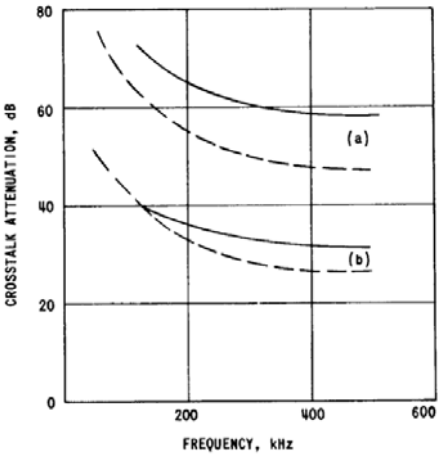

Figure 74—Far-end cross-talk attenuation (a) between two intrabundle channels and (b) between an intrabundle channel and a phase-to ground PLC channel (solid lines = calculated and dashed lines = measured)

Table 23—Multiplying factors for intrabundle channel attenuation to account for icing

Frequency (kHz)	Multiplying factor
50	8.0
100	8.8
200	12.4
300	14.6
400	14.2
500	12.8

Copyright © 2005 IEEE. All rights reserved.
Copyright The Institute of Electrical and Electronics Engineers, Inc.
Provided by IHS under license with IEEE
No reproduction or networking permitted without license from IHS
Not for Resale

9.1.5 Recent experiments

Studies conducted in Germany (see Laughlin et al. [B115]) have provided data on the use of a quarter-wavelength coupling filter. In addition, these studies included observations of intrabundle channel performance during line faults. It was determined that clashing of subconductors during a fault caused momentary circuit failure. The circuit judged was unsuitable for protective relaying applications requiring through-fault transmission.

9.1.6 Application considerations

Although intrabundle channels have been successful in some countries, many technical problems still exist, particularly with regard to material availability for large-scale applications in countries where the first application has not yet been made. Experience with line-coupling methods, insulated separator performance, and fault behavior on an intrabundle coupled line is still limited. The intrabundle technique has several significant advantages, as follows:

a) Lower fair-weather line losses than conventional carrier channels

b) High cross-talk attenuation between channels

c) Higher density application of channels

d) Less interference with or from radio services in the PLC band

It is possible that the intrabundle channel will become a useful technique in future applications of PLC, particularly in ice-free areas.

9.2 Insulated shield wires

9.2.1 Insulated shield-wire channels

The overhead shield wires (ground wires) on a power transmission line can be used as a carrier transmission medium by insulating the conductors from the towers (see Farmer [B72] and Wood et al. [B190]). These conductors (either a single shield wire or a shield-wire pair) are usually isolated from the tower with an insulator having an air gap breakdown of 15 kV to 25 kV. Thus, the original purpose of the overhead shield wires, from a lightning break down point of view, is not compromised.

A benefit resulting from overhead shield wires is the reduction in 60 Hz drainage currents induced in the shield wires. The resulting power savings may be significant for a shield-wire pair in which the conductors are properly transposed. Insulating the shield wires causes a slight increase in the zero sequence impedance of a power line circuit, which can cause a corresponding increase in overvoltages associated with line to ground faults. In most systems, this increase can be neglected; however, in systems with high ground impedance, it may be significant.

The cost of the coupling equipment required for an insulated shield-wire application is less than that required for PLC coupling. PLC applied to phase conductors requires coupling capacitors, line tuners, and wave traps, and the cost of the coupling capacitors increases substantially at higher transmission line voltages. In contrast, the cost of insulated shield-wire coupling equipment remains relatively independent of system voltage. The shield-wire channel has an advantage in that it does not require a power line outage when equipment maintenance is needed, whereas an outage is required for major maintenance of PLC coupling equipment.

Major requirements for a shield-wire system include conductors and conductor insulation, transpositions, and terminating equipment.

Copyright © 2005 IEEE. All rights reserved.

Copyright The Institute of Electrical and Electronics Engineers, Inc.
Provided by IHS under license with IEEE
No reproduction or networking permitted without license from IHS
Not for Resale

9.2.2 Conductors and conductor insulation

The conductors used on a new insulated shield-wire channel are usually aluminum-jacketed steel cables. Insulation is sometimes added to use existing steel wires. The characteristic impedance of a single overhead insulated shield-wire line is approximately 500 Ω, whereas the balanced pair configuration has a characteristic impedance of about 900 Ω.

The shield-wire conductor or conductor pair is ordinarily insulated from ground at each tower. Insulator requirements are not critical as long as the voltage breakdown is adequate, but they should have suitable arc gaps to prevent tracking. It is also recommended that the insulators be a design that will not drop the conductor if the insulating material is broken.

9.2.3 Transpositions

Whenever two shield wires serve as a pair, a suitable transposition scheme is necessary for the 60 Hz power saving benefit to be realized and for the induced 60 Hz current to be minimized. The objective in selecting transposition locations is to equalize the induced 60 Hz current in the two wires, which is accomplished by equally dividing the line length over which each wire occupies each position in the line configuration. The maximum distance between transpositions will be determined by how much voltage should be permitted to exist on the shield wires during heavy power line loading. Depending on the line current and user practice, guidelines limiting this distance to values from about 10 km to 50 km have been used. Induced voltage per unit distance, which is pertinent to the selection of this value, can be determined by a relatively easy computation.

9.2.4 Shield-wire terminating equipment

A suitable protective coupling device must be used at each end of the shield-wire channel to provide a drainage path to ground for the induced 60 Hz influence and lightning currents while coupling the carrier signal to the shield wires. An example of a shield-wire coupler is shown in Figure 75. Other coupler arrangements have been successful. For example, some do not require the additional capacitors in series with the coupling capacitors. Many installations have been made with a balanced cable pair instead of coaxial cable for the drop connection. Most of the generally accepted two wire coupling methods have also been adapted for single wire operation, except those with iron core drainage coils.

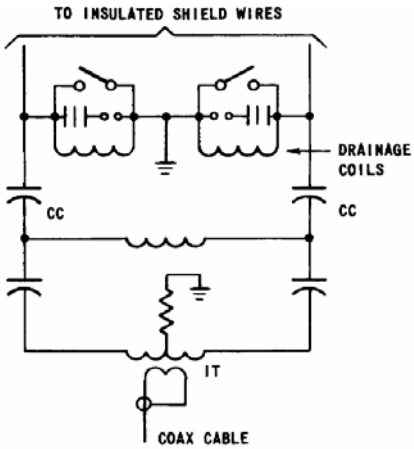

Figure 75—Insulated shield-wire coupler

Copyright © 2005 IEEE. All rights reserved.
Copyright The Institute of Electrical and Electronics Engineers, Inc.
Provided by IHS under license with IEEE
No reproduction or networking permitted without license from IHS
Not for Resale

Drainage coils in two wire couplers may be either iron core or air core inductors. Iron core drainage coils provide both economic and space advantages; however, iron-core drainage coils are more susceptible to saturation. Their performance is adequate where the induced power frequency currents in the two halves of the drainage inductors are essentially equal, as in well balanced two wire circuits. Significant unbalance in drainage currents will cause core saturation. Air core drainage coils are necessary in single wire applications or wherever unbalance is severe.

9.2.5 Performance

Flashover of the shield-wire insulators will cause the carrier frequency attenuation of the circuit to increase but usually not enough to cause a communication outage. The duration and the amount of the increase depend on the cause of the flashover and the power circuit conditions that accompany it. For example, where lightning causes a flashover that occurs only on the shield wires, the added loss will be small and its duration typically in the order of 1 ms or less. Measurements have indicated an increase in loss ranging from 1 dB to 8 dB, dependent on frequency during flashovers near the end of a line. Flashovers that accompany a power line fault will last until the fault is cleared, typically about 60 ms or longer. The increase in attenuation will also be higher, depending on how many phases are involved in the fault.

During wet weather, an allowance must be made for approximately a 20% increase in attenuation. Insulated shield wires are more susceptible to increased losses because of frost than phase wires as they do not have significant current induced self heating. Also, complete ice bridges are sometimes formed over the relatively small insulators. Complete communication circuit outages have been experienced during severe icing conditions. Transmitter and receiver terminal equipment used on shield-wire channels can be identical to that used on PLC channels Most transmitters currently have 1 W or greater power output.

A frequency range from 8 kHz to 500 kHz is technically feasible for shield-wire channels Because high noise and interference are present at low frequencies on the shield wires, the coupling equipment must be designed to provide a bandpass or high pass filter characteristic with a cutoff frequency of about 5 kHz. Frequencies below this cutoff are attenuated about 40 dB.

Insulated shield-wire channels are used for voice, supervisory control, alarm, and telemetry functions. Some protective relaying channels have been applied on insulated shield wires, but there is limited application experience.

9.2.6 Other systems using shield wires

The application of high-capacity communications systems are being actively pursued with composite cables with acceptable performance in which the outer portion of the cable is the transmission-line shield wire. In separate systems, the core of the composite cable may contain optical fibers or conventional metallic cable conductors. With the increased use of the shield wires for communication systems, the feasibility of implementing the transpositions discussed in 9.2.3 becomes more difficult. Extensive data and experience have already been obtained with aerial cables on power lines in Europe.

9.3 PLC on HVDC lines

The application of PLC to HVDC lines has been successful in several installations. The coupling can be to the positive and negative pole lines; to one of the pole lines and the static wire; or to the pole(s) and ground. The surge impedance of the intended connection must be calculated with special modal analysis techniques. Because the HVDC lines are usually long, high transmitter levels are required. Repeater installations with and without local drops may be required. The coupling equipment is usually designed especially for the installation to optimize the signal levels to provide adequate SNRs and signal margins.

Copyright © 2005 IEEE. All rights reserved.

Copyright The Institute of Electrical and Electronics Engineers, Inc.
Provided by IHS under license with IEEE
No reproduction or networking permitted without license from IHS
Not for Resale

10. PLC verification and testing

10.1 Testing of new and modified PLC systems

Two types of testing can be performed before the commissioning of PLC equipment. The first, acceptance testing, is done to make sure that the equipment and its design will operate as expected, and this can be accomplished by a combination of study, laboratory-type testing, and review of manufacturer's data and test results. Acceptance testing is generally performed before the installation of any new type of equipment, but it can be done at the same time as an installation to save time.

The second type of testing is called system and installation testing. These tests are done on every new installation or when there is a change in the equipment, equipment configuration, or line route/configuration. These tests are done in the field, generally with test equipment and personnel at each communication node of the protective relay channel.

10.1.1 Acceptance testing

As suggested in 10.1, the purpose of acceptance testing is to assure that the equipment will operate as expected when it is placed in service. Therefore, it is essential that all tests place the equipment under conditions as close as possible to the actual conditions that the equipment will experience under both normal and abnormal field conditions. It is necessary that all inputs and outputs to the device under test be terminated with either actual coils of relays or contacts. Supply voltages and loads to simulate connections to other devices should be provided. If a new but similar piece of carrier equipment becomes available, it may only be necessary to re-examine the changes.

10.1.1.1 Acceptance testing conditions

All expected operating conditions need to be identified and investigated. Although not all conditions require testing, most conditions can be simulated in a laboratory environment with ANSI/IEEE standards. ANSI C93.5 is an applicable standard, in particular the section on Ratings. The manufacturer may supply data to prove compliance with these standards. In some cases, this data will be sufficient and preclude the need for testing. Some conditions may be unique to the particular installation or utility's experience.

During acceptance tests, a series of "observational" tests may be performed to benchmark the performance of the equipment. These tests may be somewhat sophisticated such that they may not be practical to do in a field environment. The information gathered during observational tests may be essential in resolving operational problems. Having elaborate oscillographic capabilities in the substation is of no value without knowledge of the input/output response of the system being monitored. A reference set of oscillographic responses will prove useful in determining future operating conditions and will assist in troubleshooting.

The communication equipment to be tested must be set up and adjusted to the manufacturer's recommended specifications. All external channel equipment, tuners, traps, or simulators must also be set up and adjusted to the manufacturer's recommended specifications. A test that can be potentially destructive and is not within the manufacturer's specifications should not be done without the manufacturer's approval.

Almost all communication equipment can be made to produce erroneous trip outputs or fail to produce an intended output. The purpose of the tests is to assess the risk under expected operating conditions. All tests assume the communications equipment is connected to a suitable power source and to a communications channel simulator with noise injection capability.

--`,,```,,,-`-`,,`,,`,`,,`---

Copyright © 2005 IEEE. All rights reserved.
Copyright The Institute of Electrical and Electronics Engineers, Inc.
Provided by IHS under license with IEEE
No reproduction or networking permitted without license from IHS
Not for Resale

10.1.1.2 Suggested acceptance tests

The following list represents suggested type tests and observational tests that can be performed. Additional data on tests and test circuits are available in ANSI C93.5.

Power supply: The ability of the power supply to provide a suitable operating environment under conditions of temperature extremes and transients (both conducted and radiated) should be examined. In addition, the power supply should not produce noise (either conducted or radiated) that may impede the operation of nearby equipment.

Transmitter: The keying (relay interface) and the signal output should be checked for compatibility with its intended operating environment. The keying interface is designed to take the output from the protective relaying scheme and operate the transmitter such that the remote receiver can detect this signal and change the state of its output. It is possible that under certain installation conditions, the keying input can be fooled and result in a misoperation of the remote receiver.

Observational testing of the keying input may be the only way to determine that a receiver operation was caused by the transmitter being keyed rather than by a receiver misoperation. Many newer transmitters have "transmitter keyed" light-emitting diode targets or output relays that make this job easier. During testing, it may be determined that the sensitivity of the keying input may preclude the use of long keying leads and may require the insertion of an auxiliary interposing relay to increase the keying circuit burden to avoid induced signals that cause misoperations.

Although transmitter trip keying extension circuitry may result in a greater level of dependability, a high level of sensitivity combined with the fast operating time of the solid-state keying input may make this circuitry susceptible to noise keying, which results in an unacceptably low level of security. An alarm contact that changes state when the transmitter is keyed can be connected to an event recorder or oscillograph, but the recorder may not be fast enough to capture the transient keying. This result can be easily verified in the laboratory.

The behavior of the transmitter output may be checked under normal and abnormal impedance situations. The adjustable range of the fundamental operating level needs to be verified along with the resultant harmonic and spurious emissions, which may change under condition of high-standing waves.

Receiver/logic: The receiver performance under conditions of noise, channel interruptions, interference, and frequency drift can be evaluated to determine the most desirable logic settings. The sensitivity of the receiver should be verified.

Channel time test: The channel time is defined as the time between the keying input to the transmitter and the resultant output of the receiver. Knowledge of the channel time is essential when examining operation event data. Channel times stated by the manufacturers are often conservative. The actual channel time can vary considerably under different logic settings or with the use of interposing relays.

Output: The output circuit may be designed to drive either a solid-state relay or a mechanical relay. The current (or voltage) requirements for these relays are very different. The actual relay(s), or a simulated load, should be connected to the output circuits to verify compatibility between the two circuits.

Security/dependability: Laboratory verification of security and dependability data may be useful in determining logic settings and in providing benchmarking data. During false operation investigations, it may be useful to r-test the equipment to determine if a component change or failure resulted in the misoperation. It may not be possible to reproduce the exact data that the manufacturer supply because of the unrepeatability of noise sources. However, the family of curves for different logic configurations should be similar. The collection and verification of this data can determine the best logic settings for the equipment. The data gathered here may be useful later in determining if the equipment has reached the end of its useful

Copyright © 2005 IEEE. All rights reserved.

Copyright The Institute of Electrical and Electronics Engineers, Inc.
Provided by IHS under license with IEEE
No reproduction or networking permitted without license from IHS
Not for Resale

life. If the original curves and the current curves are the same, then the security and dependability characteristics have probably not changed much.

Environmental tests: Several ANSI standard tests can be performed on PLC equipment to ensure proper operation. Refer to ANSI C93.1, ANSI C93.3, ANSI C93.4, and ANSI C93.5. Environmental tests include temperature, supply voltage, RF exposure, and surge withstand. It may be too difficult to perform these tests in a field situation.

Temperature tests: The equipment must tolerate temperature extremes. The tests should be run for at least 8 hours with the transmitter and receiver tested separately. The unit under test should be communicating to a unit that is under room-temperature conditions. It is important to allow several hours for the transition from one temperature extreme to the other to avoid condensation.

The equipment must operate with all permissible (high and low) variations of supply voltage. During voltage operating range tests, the receiver and transmitter should be tested separately.

RF noise susceptibility and emissions: The equipment should tolerate RF radiation. The transmitter and receiver should be tested separately. Although there is no current standard for emissions, it may be useful to make sure that the PLC equipment will not interfere with nearby equipment.

Surge withstand and fast transient compatibility: The equipment should withstand the application of both oscillatory and transient wave conducted waveforms to the inputs and outputs of protective relay equipment. There is debate about which input and outputs fall under this standard. There should be an understanding between the manufacturer and the customer as to what the withstand expectations of the PLC equipment should be and which inputs and outputs can tolerate this test.

While doing this testing, the descriptions, procedures, and schematics provided by the manufacturer can be checked and verified, and the testers can become familiar with the instruction book materials.

10.1.2 System and installation testing

10.1.2.1 Introduction

System and installation testing for PLC equipment should be completed before final in-service operations. During this testing, the primary components can be evaluated and tested separately for performance and efficiency. Collectively, each part can then be reevaluated during an overall functional test for system performance.

The primary components used with PLC, such as the transmitter and the receiver (or transceiver), amplifiers, hybrids, balancing transformers, coaxial or triaxial cables, line tuners, and line traps should conform to purchase specifications and should have been fully evaluated during an acceptance testing process.

10.1.2.2 Installation testing

Before initiating PLC system testing, the integrity of the on-site panel or rack wiring connecting the relays and PLC equipment panels should be determined. The wiring should be checked against the overall system design schematic and verified by a point-to-point verification process. Any required card or wiring jumpers should be placed in their proper position.

The shield of the coaxial cable or the inner shield of the triaxial cable should be grounded only at the transmitter/receiver equipment panel in the relay house. Using a dc 500 V megohm meter, the coaxial or triaxial cable shield-to-ground insulation should be tested to verify insulation quality. Failure of shield-to-ground insulation during a system ground fault may prevent proper carrier operation.

Copyright © 2005 IEEE. All rights reserved.
Copyright The Institute of Electrical and Electronics Engineers, Inc.
Provided by IHS under license with IEEE
No reproduction or networking permitted without license from IHS
Not for Resale

The PLC equipment supply voltage requirements should be checked to ensure correct ratings. This check should include all major components and any installed power or station battery auxiliary apparatus such as dc-to-dc converters. The voltage should be measured and determined if it is within required specifications.

10.1.2.3 PLC equipment testing

NOTE—Never open the coax connection and unload an operating transmitter and do not connect test equipment to the line tuning equipment without first closing the carrier ground switch. Failure to comply may result in equipment damage.[7]

Transmitters: The PLC system may consist of more than one transmitter, for example, pilot and transfer trip channels. Each transmitter should be initially tested separately.

After each transmitter is energized, test points as defined by the manufacturer's instructions should be monitored for appropriate voltage levels. The individual transmitter output voltage and frequency can be determined with a 50 Ω noninductive resistor as a load. Some users mount this type of resistor permanently on the PLC rack and use a two-way knife switch to insert this dummy load during initial or maintenance testing. A frequency-selective voltmeter is necessary for this measurement. Both guard and trip frequency levels should be checked, if applicable. All transmitters used for ON–OFF carrier or FSK carrier require similar measurements.

The measured levels will provide a reference or gauge of the overall tuning of hybrids, filters, and matching transformer. With the transmitter set for the desired output level using the 50 Ω load, the carrier frequency or frequencies can be adjusted as necessary.

For frequency shift keying, the adjustment of one frequency may affect the other or the set power point. The original settings may require readjustment.

The various test point voltages on the individual cards should be recorded and used to evaluate any changes noted during maintenance activities. Test points on specific modules or cards are located by the manufacturer's schematics and drawings for the equipment.

Amplifiers: Linear amplifiers are used by many utilities for long transmission lines in areas where adverse weather conditions impact PLC signal strength or on some transmission cable installations. Typically, 100 W amplifiers are used for unfavorable weather conditions. Some utilities in icy climate areas simply use a certain minimum line length as a criteria for amplifier application. Amplifiers should not be used to overcome improper line tuning or when otherwise not needed because of the increased probability of interference elsewhere.

Verification of the amplifier performance is accomplished by measuring the full power output level into the 50 Ω noninductive load with rated transmitter input voltage applied. The harmonic content of the output voltage can be measured with a frequency-selective voltmeter or spectrum analyzer. The second harmonic should be down approximately 50 dB. For example, at 100 W = 71 V, harmonics should be less than 0.24 V using the 50 Ω load. High harmonic content suggests improper adjustment or possible problems in the driver or power output section of the amplifier. Again, the values measured from the various test points should be recorded for future reference during maintenance activities.

Receivers: Initial testing of the receiver can be accomplished with a signal generator connected directly to the receiver input terminals. The signal level and frequency should correspond to expected values to be received from the remote transmitter. As the signal level and frequency are varied, alarms and margin levels can be analyzed for performance. This method is useful when the transmission line equipment is unavailable because of construction or other outage conditions.

[7]Notes in text, tables, and figures are given for information only and do not contain requirements needed to implement the guide.

Copyright © 2005 IEEE. All rights reserved.

Copyright The Institute of Electrical and Electronics Engineers, Inc.
Provided by IHS under license with IEEE
No reproduction or networking permitted without license from IHS
Not for Resale

With the receiver now connected to the carrier equipment at the remote end, measure the input signal before and after the receiver's input attenuator. Because sufficient signal level into the receiver is dependent on the condition of all associated equipment in the PLC system, it is necessary to have evaluated all connected apparatus previously. Assuming this has been completed, additional testing can be accomplished.

With an acceptable signal level into the receiver, the input filter can sometimes be checked by scanning the frequency spectrum around the filter's center frequency at the output of the filter. Refer to the manufacturer's instructions.

Receiver sensitivity setting adjustments should be completed next. The settings should allow for normal variations in input levels caused by changes in line attenuation. All test point measurements should be recorded for future reference and for evaluating performance changes. Other receiver testing techniques generally are provided within the manufacturer's manuals.

Verification of the output logic, including tripping, alarms, and other functions should be completed.

Hybrids: Hybrid performance is checked by measuring the signal levels at all terminals with a frequency-selective voltmeter. This measurement should include all frequencies transmitted and all frequencies received at each hybrid terminal. Hybrid testing is covered in ANSI C93.4.

For a balanced hybrid that combines and isolates two transmitter outputs, the trans-hybrid loss or isolation value should be relatively equal for both transmitted frequencies and approximately 30 dB or greater. The through loss or insertion loss should be approximately 3.5 dB.

A skewed hybrid sometimes connects a transmitter and receiver to the common line-tuning coupling equipment. It is biased to provide a high isolation loss between the relatively high transmit signal level input to the relatively low receive signal level output. A 40 dB isolation level can typically be achieved. Biasing also minimizes the transmit insertion loss to less than 1 dB for improved SNR. Typically, receiver insertion loss is high, approximately 12 dB. SNR remains generally unaffected.

Balance transformer: For phase-to-phase coupling applications, the balance transformer provides 50 Ω balanced impedance and isolation between two output (or input) signals and the associated sets of line tuning equipment. Just as with the hybrid, check performance by measuring the signal levels at all terminals with a frequency-selective voltmeter. Insertion loss should measure at 0.5 dB. Isolation should be ≥30 dB.

CCVT lead-in conductor: The conductor from the CCVT drain coil down to the line tuner, which is called the lead-in conductor, should have insulation rated for approximately 5 kV or greater and be supported by stand-off insulators or PVC conduit properly spaced from metal structures. No cables or messengers should be strapped to the lead-in PVC conduit. This condition is necessary to minimize leakage capacitance-to-ground in this high-impedance part of the PLC circuit. Check the tightness and condition of coax terminations, knife switches, and other wiring. Follow the instructions provided with the line-tuning equipment and related apparatus.

Matching transformer: Connect a single transmitter to the input of the line tuner. A signal source from a tunable frequency source with adequate power can also be used. Use a frequency source for the frequency that will be tested. The frequency for adjusting the matching transformer should be the GMF of the transmitter frequencies, or of the receiver frequencies if no transmitters are present. Use a reflected power meter to determine the transformer tap that gives the minimum reflected power. Do not change any transformer taps or connections in the line tuner without first closing the ground switch in the tuner.

Copyright © 2005 IEEE. All rights reserved.
Copyright The Institute of Electrical and Electronics Engineers, Inc.
Provided by IHS under license with IEEE
No reproduction or networking permitted without license from IHS
Not for Resale

Tuning inductor unit: This single-frequency device combined with the coupling capacitor forms a series resonant circuit that provides a low-loss path for the transmitted signals. On short lines, changing the tuning inductor on one end will affect the tuning inductor adjustments at the other end. On longer lines, single-ended tuning using reflected power measurements is usually done. If one end is changed, check the other end for any retuning needed to minimize reflected power.

To adjust the tuning inductor unit, provide a single signal from one transmitter, or from a separate frequency source, into the line. Then have an associate measure the reflected power at the remote line terminal. Adjust the tuning inductor for minimum reflected power. The adjustment of the tuning inductor is required on all resonant and wide-band tuners. Also, visually check the arc gap and set to the manufacturer's specified tolerances.

In addition to single-frequency line tuners, two-frequency line tuners are also available. The low-frequency and high-frequency sections of the tuner are similar to a single-frequency tuner except that they contain trap units that are parallel resonant circuits. The trap unit in the low-frequency section is tuned to block the high frequency. Similarly, the trap unit in the high-frequency section is tuned to block the low frequency. The remaining circuitry in the dual-frequency tuner is tuned for minimum reflected power.

Line traps: Before the line trap is installed, visual inspection is necessary to determine if damage may have occurred during transportation. Check for leaking tuning capacitors, broken surge arresters, and loose connections. During routine operation, line traps are subject to severe physical stress during fault conditions. The primary connections and bracing in the trap should be inspected for tightness.

For line trap application in high seismic activity regions, and where possible, it is recommended that line traps be mounted vertically with suspension insulators. A spring assembly should be used for restraint and temperature compensation.

Line trap testing should be completed with the trap suspended above the ground by at least one times the trap diameter (and away from any ferrous material) or in its designated mounting location. To verify integrity of an installed trap, measure the received signal levels with the transmission line deenergized and with the bus side disconnnects open. Compare this reading with the same measurement made with a ground applied to the deenergized line on the bus side of the line trap. A significant signal loss through the applied ground indicates poor tuning or trap failure.

To tune a single-frequency line trap, deenergize the line and apply protective grounds. Break one side of the parallel connection between the tuning pack and the trap coil. Insert a variable frequency source, loaded into a noninductive resistive load, into the parallel connection point. Vary the source frequency, and measure the power transmitted through the "series connected" line trap and into the resistive load. When tuned correctly, maximum power transfer through the filter will occur at the desired center frequency. Special-purpose test equipment is available to simplify connections and calculations of test results. Also, specific test methods may be specified by the trap manufacturer. Be sure to refer to the manufacturer's instruction book for the trap.

Dual-frequency line traps are also available. The main difference between the single-frequency line trap and the dual-frequency line trap is the addition of a trap unit in the low-frequency section of the line trap. This trap unit must be electrically isolated from the rest of the trap and tuned to the upper frequency. The upper and lower frequency sections of the trap are then tuned as described for a single-frequency trap.

A wide-band line trap differs from a narrow-band single- or double-frequency line trap in that the wide-band trap presents a constant blocking impedance over a broad frequency range. Wide-band traps may be obtained as either fixed tuned or field adjustable. Field-adjustable wide-band traps have two tuning packs that are tuned separately. One tuning pack contains capacitor combinations that are chosen to resonate with the main coil at the GMF of the desired bandwidth. The other tuning pack contains capacitor combinations, an adjustable inductor, and a resistor. It is tuned separately to the GMF. The tuning should be done without

Copyright © 2005 IEEE. All rights reserved.

Copyright The Institute of Electrical and Electronics Engineers, Inc.
Provided by IHS under license with IEEE
No reproduction or networking permitted without license from IHS
Not for Resale

the resistor in the circuit as it tends to flatten out the peak and makes it difficult to tune to the exact frequency. After this tuning pack is tuned, it is connected across the main coil. This process completes the tuning. The tuning accuracy of the wide-band trap can be checked with the same test circuit used in checking a narrow-band trap noting the frequency bandwidth of the maximum power transfer through the filter.

Final checks: If adjustments were made to any component of the PLC system, the effect of those adjustments must be determined on the overall system and base measurements recorded for future reference. Specifically record the frequency and output level of each transmitted signal at the input and output of each hybrid, the frequency and level of each received signal measured on the coax and at the receiver input, the frequency and level of the local transfer trip transmit signal measured at the input of the transfer trip receiver, and the reflected power of each transmitted frequency measured at the connection at the output of the transmitter.

Recheck, and adjust if necessary, the transmitter/amplifier output levels and the receiver input signal levels. Record all data for future maintenance activities. An on-site logbook is recommended for each PLC system with the appropriate recorded data.

System test: An overall relay system test should be completed to verify operation of the PLC system. Operation of lockout relays, tripping of breakers, breaker failure initiates, external logic, and alarms using the PLC system are required to confirm the integrity of the system. Other testing will depend on the type of relays used. For example, shared channel schemes, carrier blocking, and phase comparison schemes will require different types of testing. Follow the manufacturer's recommended process.

For phase-to-phase (or mode 1) coupling, checks should be made to determine if the PLC signal will operate at a reduced signal level in the case of a failure or a fault in one phase.

10.1.3 Channel timing measurements

It may be useful to know the actual channel time for a given protective relay channel. Channel time is the time between applying a signal to the input of the transmitter and generating an output from the receiver with the transmitter and receiver connected back-to-back. However, under some conditions, where the communication medium length is great, or logic options change the time, it may be useful to know the minimum and maximum channel times to ensure relay coordination and timely operation.

NOTE—The connection of an oscilloscope to voltage transformer, transmitter keying and receiver output circuits can give false readings or indications when external grounds are introduced in isolated circuits. The use of scope isolators or a battery operated scope is recommended.

The transmitter/receiver pair channel time can be measured by connecting the transmitter and receiver back-to-back with coax cable terminated with a 50 Ω noninductive load, being careful not to overpower the receiver. By connecting a dual-channel oscilloscope to the transmitter keying input and the receiver output circuit, the scope will provide the information necessary to determine the channel time. In many cases, there will be contact bounce if the receiver has a relay output. The conservative approach is to assume that the contact bounce has to stop for the upstream devices to actually trip. To assure relay coordination, the longest transmitter–receiver time plus an appropriate margin should be considered.

Measuring the channel time when the transmitter and the receiver are not in the same location is far more difficult. Several possible methods are described in 10.1.3.1 – 10.1.3.5.

Copyright © 2005 IEEE. All rights reserved.
Copyright The Institute of Electrical and Electronics Engineers, Inc.
Provided by IHS under license with IEEE
No reproduction or networking permitted without license from IHS
Not for Resale

10.1.3.1 Echo trip timing

For DTT channels, the approximate channel time can be determined by connecting the voltage produced by the remote receiver output circuit to the remote transmitter keying input. The channel time can be determined by observing a dual-channel oscilloscope connected to the local transmitter keying input and the local receiver output circuit. By initiating a send at the local end's transmitter, the local receiver will produce its output in approximately twice the channel time (out and back). This will only be an approximate time because contact bounce will produce some error.

This timing method is much more difficult for blocking scheme carrier equipment because the local receiver can see its own transmitter. In this case, and in the cases in which there is communication in only one direction, the use of satellite time standards can time the channel. In any case, the use of satellite time standard is the preferred method, as described in 10.1.3.2.

10.1.3.2 Satellite timing pulses

A remote time source, such as a geostationary satellite clock or global positioning satellite (GPS) clock, can provide timing pulses that are in sync between the transmitter and the receiver location. These timing pulses can determine the time interval from when the transmitter was keyed to when the receiver produced an output.

By using a satellite receiver that produces a timing pulse at a known time and connecting the output to a remote keying circuit, the time that the remote transmitter is keyed can be determined. A similar local satellite receiver can be connected to a local dual-channel scope. By connecting the scope to the output of the local clock and the output of the local receiver, the time between transmitter keying and receiver output can be measured. The difference between the two scope traces is the total channel time.

10.1.3.3 Satellite controlled current sources

Several manufacturers make current sources that derive their phase reference from satellite-controlled clocks. These clocks, when connected to sources at each end of the line, allow the currents to be in phase. Using a dual-channel oscilloscope, one can monitor the local and the remote comparison signals and adjust the phase delay and symmetry for proper operation.

10.1.3.4 Voltage source as a timing reference

Even though satellite clocks are widely available, not everyone has them. A method of using the voltages on the voltage transformer circuits at each end of the line, although not nearly as accurate, can be used. In cases in which the line is not in service, a "sister line" going between the same locations can be used.

Same-phase voltage transformers, on both ends of the line in which the communication channel is serving, should be of similar phase angle. Although the angular difference is affected by phase errors in the voltage transformers, the main contributor to angular differences is the load on the line and the length of the line. On moderately loaded short lines, differences may be in the region of 5 degrees (this represents a timing error of 230 μs); on long lines, it may be up to 15 to 20 degrees (this represents a timing error of 0.69 to 1 ms). The angle can be calculated from the load, the charging current, and the line parameters. The voltages should not be used as reference unless the angular difference has been calculated or is known with reasonable accuracy and those numbers that correct the timing measurement.

With a great loss of precision, the ac outlets in the station can be used if the phase relationship between locations can be determined. Use of the line voltage transformers can serve as a reference to determine the approximate phase relationship between the ac outlets.

Copyright © 2005 IEEE. All rights reserved.

Copyright The Institute of Electrical and Electronics Engineers, Inc.
Provided by IHS under license with IEEE
No reproduction or networking permitted without license from IHS
Not for Resale

By using dual trace oscilloscopes at both ends of the line, the voltage circuit voltage can serve as a reference on channel one. The transmitter can be keyed manually at any time.

NOTE—Be very careful connecting an oscilloscope to the voltage circuit. If the scope input reference is grounded and is connected to the phase connection of the voltage circuit, the voltage circuit will be grounded. The voltage on the voltage circuit will collapse, the line will trip if in service, and the oscilloscope could be damaged. The use of an active scope isolator is recommended.

At the transmitter location, the time (t_1) between the previous rising-slope zero-crossing of the ac voltage reference and the transmitter keying voltage rise is measured. At the receiving location, the time (t_2) between the previous rising-slope zero-crossing of the ac voltage reference and the receiver output is measured. The difference between these times ($t_1 - t_2$) is the channel time for channels less than 16 ms (one cycle). For channels times greater than one cycle, the user has to add multiples of 16.67 ms to the measured time, which assumes that one knows the expected channel time within the nearest cycle.

Although this method is not precise, it provides a benchmark that can evaluate oscillographic data under fault conditions and compare the channel time. This benchmark can be useful in determining appropriate coordination time margin and in determining the cause of false operations.

The channel time should be measured several times because the duration of contact bounce will be somewhat variable. Also, in the case of ON–OFF receivers, the channel time could be dependent on the receive level. The channel time should be measured at the nominal receive level and the minimum (just above the threshold) point. The chosen coordination time margin should take into account any deviations.

10.1.3.5 Current sources based on a voltage reference

As explained in 10.1.3.4, the voltage transformers at both ends may be close enough in phase to use them as a reference. (The user must determine if the voltage angles at the two ends are sufficiently in-phase for this method.)

There are two ways to use the phase voltage transformers to create a current reference.

Current sources at both ends can be adjusted so that their phase shift from the voltage transformer reference is the same. These currents can then be injected into the relays at both ends, and adjustments can be made.

The other way uses the voltage transformer to “make current” for injection into the relay. By connecting an adjustable resistive load box in series with the voltage transformer, an adjustable current can be developed that can be injected into the relays. The test current should be the same at both line ends to obtain the same phase angle at each end. If one attempts to get too much test current from the phase voltage transformer circuit, there may be a voltage collapse and the line relays may operate.

10.2 Testing and evaluation of misoperations

10.2.1 Routine maintenance

Routine maintenance is performed on a periodic basis to ensure that the PLC equipment is performing properly and that tuning of the various components is optimum. Line traps are not usually checked on routine maintenance. The need for testing may be indicated if signal levels have deteriorated and are not restored by tuning adjustments.

Copyright © 2005 IEEE. All rights reserved.
Copyright The Institute of Electrical and Electronics Engineers, Inc.
Provided by IHS under license with IEEE
No reproduction or networking permitted without license from IHS
Not for Resale

The following procedure is typical of a thorough routine maintenance procedure. Specific items may need to be adapted or added or deleted to suit the needs of specific installations or maintenance cycles:

a) Isolate the carrier relay system, or if appropriate, isolate the carrier equipment from the relays with the carrier cutoff switch.
b) Record levels as found and as left for future reference.
c) Check all power supply voltages.
d) Receivers
    1) Remove power
    2) Observe electrostatic discharge (ESD) precautions, remove circuit cards, inspect components and jumpers, blow out dust, and replace circuit cards
    3) Repower unit, and make internal signal level, logic, and timing tests as appropriate for the specific equipment being tested.
e) Transmitters
    1) Remove power, remove circuit cards, check jumpers, and blow dust out
    2) Repower unit, measure frequency, and adjust if necessary
    3) Measure power output, and adjust if necessary
f) Measure reflected power at the line tuner or at the coax cable leaving the substation control building. If multiple transmitters are used, test each separately by shutting down the other transmitters.
g) Adjust the line tuner for the lowest reflected power (average for all transmitters). (Some manufacturers recommend using the GMF for determining reflected power levels.)
h) Recheck and adjust transmitter output levels.
i) Set receiver margins.
j) Perform end-to-end signal measurements. Perform end-to-end trip test if appropriate.

10.2.2 Troubleshooting

The following tests are intended to provide a general troubleshooting guide for testing PLC systems suspected of having contributed to an incorrect relay operation, e.g., pilot trip for an external fault or failure of pilot tripping for an internal fault.

10.2.2.1 Equipment testing

Perform the following tests at each terminal of the communication system:

a) Make end-to-end carrier signal checks, including transmitted and received RF levels at both ends.
b) Check standing wave ratio (SWR) at both terminals, and check the receiver margins.
c) Check the line tuner for proper matching
d) Check protective gaps in the line tuner and CCVT. Clean the gaps, and set the proper gap spacing to the manufacturer's specification.
e) Test the shield-to-ground insulation for deterioration (also a good periodic test every 10 years or less).
f) Perform line trap checks, as follows:
    1) Isolate the line trap, and apply a ground on the bus side. Transmit carrier at the remote terminal, and measure the received carrier signal at the local terminal. Remove the ground, and perform the test again. If the trap is performing properly, the signal measurements should be similar. Repeat for traps at the other line terminal(s).
    2) If the previous tests indicate that there may be a problem with the line trap, then the trap should be inspected and its tuning should be checked.

Copyright © 2005 IEEE. All rights reserved.

Copyright The Institute of Electrical and Electronics Engineers, Inc.
Provided by IHS under license with IEEE
No reproduction or networking permitted without license from IHS
Not for Resale

10.2.2.2 Arcing disconnect tests

NOTE—Slow opening or extended arcing of a disconnect switch may cause damage to the line trap arresters and other equipment.

Deenergizing a small capacitive load, such as a circuit breaker, by using the line voltage disconnect switch generates severe broadband RF interference because of the restriking that occurs as the disconnect switch is opened. This technique can check the susceptibility of a PLC system to interference from noise caused by faults or by breakers opening. Such testing may be indicated when a PLC blocking system has incorrectly blocked for an internal fault or an FSK system has failed to trip. Arcing disconnect tests may also be helpful in observing the response of protective gaps in line tuners and CCVTs to be sure that these devices are not shorting out the PLC signal during faults or breaker operations. To perform an arcing disconnect test:

a) Connect instrumentation, e.g., an oscilloscope, to measure the receiver output. It may also be helpful to monitor other available outputs from the receiver such as “loss-of-guard,” “squelch,” or “block” as long as these do not have deliberate delays in their operation. Alternatively, the relay system can be setup to simulate a steady internal or external fault, as discussed in 10.2.2.3, and the response of the relay during the arcing test can be evaluated directly. (A spectrum analyzer connected to the bus voltage transformer secondaries is an option to capture a sample of the arcing noise.)

b) Isolate, by disconnects, the bus side of a circuit breaker connected to the line whose PLC system is under test. In double-breaker positions, the other breaker can remain closed to energize the line. When only a single-breaker line termination is present, the line must be energized from the remote terminal.

c) Open the disconnects to deenergize the isolated breaker. Observe the response of the receiver or relay system during the arcing period. The optimum result is no change in the output of the receiver or relay system during the test. When analyzing the response of the relay system, the effect of any seal-in, trip-hold, current-reversal, or transient-blocking circuits should be taken into account. It may be necessary to disable such circuits to get accurate measurements.

d) If results are unsatisfactory, the following areas should be investigated:

   1) Receiver margins, on blocking systems, may be too great.

   2) Received signal levels may be too low.

   3) Line traps, particularly their surge arresters, may not be working properly to isolate the PLC channel.

   4) Protective gaps in line tuners or CCVTs may be flashing over and shorting out the PLC signal. The gaps could even be continuously shorted out.

10.2.2.3 Noise injection tests

In 10.1.1, security and dependability testing should be discussed. In these tests, noise of a controlled duration, frequency content, and level is injected into the receiver. The security of the receiver is a measurement of the probability of the receiver producing a misoperation when receiving both noise and its normal received signal. The dependability of the receiver is a measurement of the probability of the receiver operating, when intended, when receiving both noise and a transition from its normal received signal to the command signal. PLC and noise go together because the PLC signal transmission medium and the fault often have a direct connection or a connection via coupling that cannot be avoided. Fortunately, a properly working PLC system will tolerate large amounts of noise before being affected.

Security and dependability curves can be developed displaying the noise level vs. probability that noise will cause an undesired operation. By observing any changes in the baseline data either supplied by the manufacturer or created during the observational laboratory testing, the current level of performance of a given system and configuration can be evaluated. Observation of any changes in security and dependability curves can assist in troubleshooting a system that has not operated correctly.

Copyright © 2005 IEEE. All rights reserved.
Copyright The Institute of Electrical and Electronics Engineers, Inc.
Provided by IHS under license with IEEE
No reproduction or networking permitted without license from IHS
Not for Resale

Some points to consider when comparing baseline to measured security and dependability curves are as follows.

Tests are always done with the equipment removed from the power system. The transmitter or one of a similar type is colocated with the receiver under test. The transmitter under noise injection tests has no effect on either security or dependability. Equipment can be located in the substation but must be disconnected from the coax, line tuner, and so on. However, if the noise generator can produce radiated noise, such as a spark generator, other equipment in the substation may be affected. Noise sources producing radiated levels of 10 V/M or less should be located more than 3 m from any substation equipment. If the level is higher, it is best to keep the noise source out of the substation. It is preferred to perform the tests in a laboratory situation remote from the power system. Figure 76 shows a suggested assessment method.

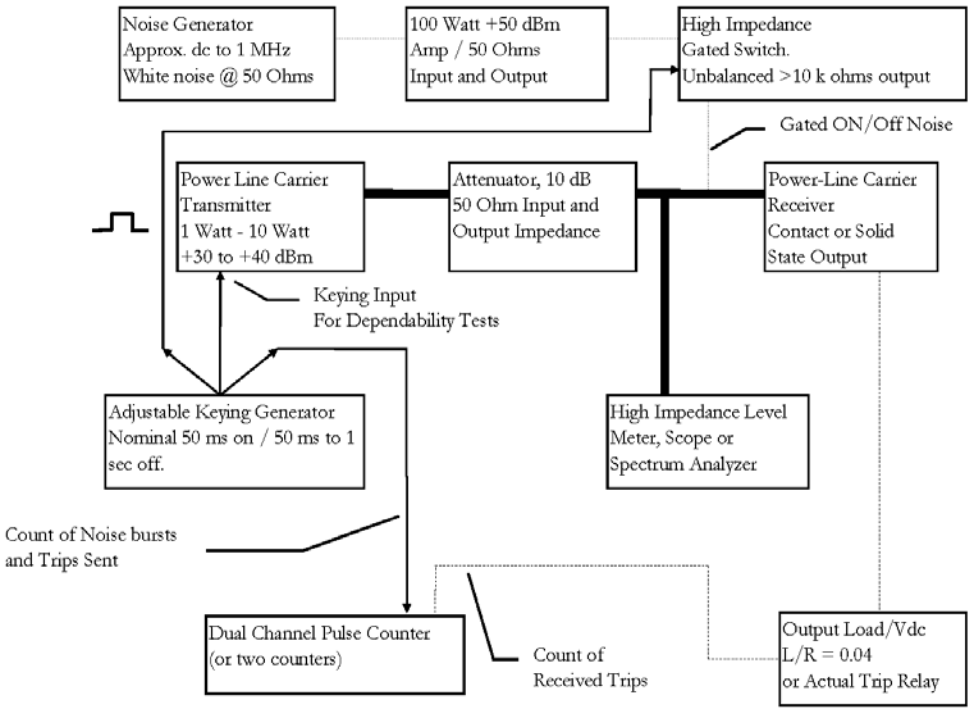

Figure 76—Suggested noise injection test method

Results will vary with different noise generators. It is best to use the same setup as the manufacturer or have a company standard that is used in both the initial laboratory observational testing and field testing. As a result, comparison with benchmarked data will be more practical and comparison will other manufacturers' curves will be possible.

Equipment is generally secure and dependable. Developing a complete set of curves can take several months of automated testing. Although this length of time may be acceptable for equipment benchmarking, it is not acceptable for troubleshooting. When troubleshooting, it is best to look at a few noise conditions and concentrate on either security or dependability tests depending on the misoperation so that testing can be done in a reasonable amount of time. Try to estimate or measure the noise level that caused the misoperation if the incident can be determined. As a result, the testing will be allowed to concentrate on certain SNRs and speed up the testing process greatly.

Noise Injection Testing Philosophy:

a) All equipment should be set up with the same levels, options, and input/output loading to which the operating equipment was exposed.

Copyright © 2005 IEEE. All rights reserved.

Copyright The Institute of Electrical and Electronics Engineers, Inc.
Provided by IHS under license with IEEE
No reproduction or networking permitted without license from IHS
Not for Resale

b) For dependability testing, the counter measures the number of noise bursts, transmitter keying attempts, and received outputs. Ideally, the number of keying attempts and the number of received outputs should be equal; however, as the noise increases, some output signals will not be received. As the noise increases even higher, the receiver will not produce any output.

c) For security testing, the counter measures the number of noise bursts and the number of received outputs. Ideally, there should be no received outputs because the transmitter will not be keyed. As the noise level is increased, the number of false outputs will increase. As the noise increases even higher, the number of false outputs will decrease until the receiver shuts down on each noise burst.

d) The noise level should be adjusted to levels from approximately 10 dB below the nominal received signal to 10 dB above the nominal receive signal unless the actual SNR of the misoperation can be determined.

10.2.3 Fault simulations

Although they are not strictly PLC tests, fault simulations can be a useful tool for investigating the problems of PLC-based relay systems, especially those, like phase comparison, which have close interaction between the relay system and the PLC channel. Several different types of tests can be made, with increasing sophistication obtained by more elaborate test equipment.

10.2.3.1 Load-current tests

On phase-comparison systems, it is generally possible, by transposing secondary currents to the relay or bypassing certain phases around the relay, to cause the relay to interpret load current as fault current. If the same changes are made to both ends, the relay will see the through load current as an external fault. If polarities are reversed at one end, the relay will see an internal fault. The same techniques can be used with directional-comparison systems, but they are generally more difficult to implement because of the influence of voltage and phase angle on the relay response.

A useful simulation of a suddenly applied fault can be obtained by rearranging the secondary currents as described in the previous paragraph and then by closing the breakers to cause load current to flow through the line. This type of test is useful to prove that blocking carriers operate rapidly enough to prevent tripping on external faults.

If line load current is not enough to allow such tests, test current sources can be used if derived from, or synchronized to, power sources that are known to be in phase. It is difficult to simulate suddenly applied faults when using test current sources unless a means of test-set synchronization is available.

10.2.3.2 Synchronized test sources

If test current sources synchronized to a common time source (such as GPS) are available, suddenly applied internal and external faults can readily be applied to test the relay system and its interaction with the carrier channel. Current-reversal tests and evolving external-to-internal faults can also be simulated, which provide realistic simulations of actual conditions and prove the proper performance of the various timers that coordinate the relay operation with the delays of the PLC channel. The only defect in the realism of such tests is the lack of fault-caused noise in the PLC channel. This defect might be overcome by combining an arcing disconnect test with a simulated fault test.

10.2.3.3 Applied fault tests

Applied fault tests, in which a real fault is applied to the system to check relay operation, represent the ultimate in fault simulation because all of the fault effects, including those on the PLC system, are represented. However, such tests are expensive to make and have the potential to disturb customers. Therefore, they are not often used for troubleshooting purposes.

Copyright © 2005 IEEE. All rights reserved.
Copyright The Institute of Electrical and Electronics Engineers, Inc.
Provided by IHS under license with IEEE
No reproduction or networking permitted without license from IHS
Not for Resale

10.3 Checkback testing philosophies

The type of channel integrity test used on a PLC-based relay communications channel depends mostly on the type of relay scheme being used. The most common types of PLC relay channels are frequency shift and ON–OFF. The frequency shift channel continuously sends a guard signal so that integrity can be measured by monitoring the level of the guard signal. The ON–OFF channel is normally off and only sends a blocking signal when a remote fault occurs and the remote end must be blocked from tripping. To verify the integrity of an ON–OFF channel, a carrier checkback system is typically used.

10.3.1 Testing intervals for carrier channels

The ideal channel test is continuous signal level monitoring for FSK. If the signal level drops below a preset value, an alarm is initiated so appropriate corrective action can be taken. The ON–OFF scheme has no continuous signal so a signal must be initiated for test and the level of that signal must be compared with a normal indication at the remote end. The ON–OFF channel should be checked at least weekly and preferably daily. The testing frequency may depend greatly on the type of testing scheme applied, whether it is manual or automatic.

10.3.2 Manual system testing

The manual testing method requires a signal level indicating meter be installed at both ends of the channel. A transmitter at one end must be keyed manually, and the signal level at the other end must be observed and reported. This process must be performed at both ends. Signal levels are typically recorded and compared with previous reports. The manual level tests are typically performed along with the regular substation visits. With this method, a transmitter failure will go unnoticed until the station is revisited or an overtrip occurs.

10.3.3 Manual checkback testing

To reduce the manpower requirements and increase the testing frequency, a checkback unit can be installed at each end. When the operator initiates the test at the local end, the remote end playback unit picks up and sends a signal back. The levels can only be recorded at the local end, but the fact that the remote unit sent back a signal proves the integrity of the system. When the operator at the remote end initiates a test, the signal levels for the other direction will be recorded. This test should be performed at least weekly with a test two to three times a week preferred.

Two separate checkback methods are used for checkback schemes over PLC. One method is a timed sequence checkback, and the other is a digital code checkback.

10.3.3.1 Timed sequence checkback

The timed sequence checkback uses a series of timed ON and OFF signals to determine channel continuity. When the test is initiated, the local transmitter keys for a predetermined period of time. A typical time may be 12 seconds. When the remote receiver picks up solidly for a predetermined period of time, such as 10 seconds, the remote checkback scheme initiates and returns a sequence of timed full and reduced power signals, typically 5 seconds each. These signal levels can be recorded manually and compared with previous results to determine the integrity of the channel.

10.3.3.2 Digital code checkback

The digital code checkback uses transmitted digital codes between remote and local transmitter/receivers. When a test is initiated with the digital code type of checkback system, a series of ON–OFF codes are sent to the remote end(s). These codes are typically 8 to 16 pulses per second, such as 8 pulses at full power and 4 pulses at reduced power. When the remote end recognizes its predetermined code, it returns a full and reduced power code to the local terminal. This process is very useful with a three terminal line because both

Copyright © 2005 IEEE. All rights reserved.

Copyright The Institute of Electrical and Electronics Engineers, Inc.
Provided by IHS under license with IEEE
No reproduction or networking permitted without license from IHS
Not for Resale

remote ends will have different codes programmed and the master can determine which terminal and which power level passed or failed the test sequence.

No power levels are recorded with this type of test. Only a pass/fail is recorded. Some digital code checkback units have a code stored so that upon receipt of this code, the transmitter will turn on full power for a preset time. This process allows a field technician to measure and record power levels without sending someone to the remote end to key the transmitter.

10.3.4 Automatic checkback testing

Automatic checkback testing is very similar to the manual system testing except that it is initiated and reported automatically. Automatic systems can consist of both types, timed sequence and digital code checkbacks. Automatic checkbacks typically test each day. The reporting will only be a pass/fail because there is no convenient way to check the levels. If a test fails, a station alarm can be initiated and recorded on the station sequence of events recorder, or a SCADA alarm can be sent. Some automatic checkback systems can be initiated from SCADA so that a failed test can be repeated.

10.4 Testing intervals for components

The various components of a PLC system work in a coordinated manner providing a complete protection system communications medium. Experience has shown that there is no industry consensus of how often each component within a PLC system should be tested. Refer Hohn et al. [B145] for more information. Each user should review their component failure history to optimize system performance. Below are some factors to consider in establishing an appropriate maintenance period. Not all of these items should carry equal weight in making this determination:

a) Incorrect operation of the PLC system
b) Age of each component
c) Line operation records
d) PLC equipment repair records
e) Physical environment (indoor/outdoor, dirt/dust, temperature range, corrosive atmosphere, frequency of lightning, icing, high fault/load current, etc.)
f) Importance of transmission line or of customer load on that line
g) Skill level of technicians performing routine maintenance work
h) Complexity of the PLC system
i) Budget constraints

11. Future trends

11.1 Introduction

The trend of the future in PLC will see improvements in the areas of equipment design, transmission efficiency, and applications. It is anticipated that these improvements will tend to be of an evolutionary nature rather than of a revolutionary one.

11.2 Electronic equipment

In the area of electronic equipment, improved equipment designs using more sophisticated circuits and techniques made possible by integrated circuits can be expected. This will enable the production of smaller, less costly, more reliable and more versatile equipment.

--`,,`,`,,`-`-`,,`,,`,`,,`---

Copyright © 2005 IEEE. All rights reserved.
Copyright The Institute of Electrical and Electronics Engineers, Inc.
Provided by IHS under license with IEEE
No reproduction or networking permitted without license from IHS Not for Resale

In the area of transmission equipment it is expected that transmitters and amplifiers with greater power outputs will become available for use in areas requiring greater signal strength. It is anticipated that some improvement in transmitter frequency stability and reliability will also be attained.

In the area of receiving equipment, it is anticipated that circuits with more sophisticated techniques will be used in separating desired signals from incoming noise, and more effective noise monitoring means will be extensively used. Although it is also anticipated that receivers of greater sensitivity will be available, this will not materially increase the effective range of carrier equipment, unless improvements are also made in reducing line noise, because the current receivers are usually noise limited and not signal limited. It is anticipated that the overall selectivity of receivers will be improved with new filter techniques. The circuits available in integrated form should enable new types of signal discriminators and demodulators to be used. In addition, the availability of large-scale digital integrated circuits will increase the use of logic in the receivers to improve their overall security and dependability as well as to reduce the cost of receiver and transmitter designs.

11.3 System improvements

At this time, limitations in the range of PLC channels are caused by insufficient SNR at the carrier receivers. To increase the range, increased levels of signal must be coupled to the line. Although this coupling can be accomplished with increased transmitter power levels, the improvements along this line are limited, because it would be costly to increase power significantly above the 100 W level now available.

It is anticipated that the increase in signal level will be accomplished with improvements in coupling efficiency, such as greater utilization of mode 1 coupling. A development that is being considered is the intrabundle channel, which uses insulated wires in one line phase for the transmission of carrier signals. Another promising possibility is a separately suspended coaxial cable for the exclusive use of carrier communications. Other improvements to be expected are the development and use of more efficient shielded signal cables such as improved coaxial cable, triaxial cable, and video cable pairs.

11.4 Applications

In the area of application, it is expected that PLCs will see increased use in their current applications. They may make more widespread use of frequencies above 300 kHz. More sophisticated protective relaying systems will use PLCs to a greater extent than before.

Greater use will be made of the transmission of digitally encoded information for data and control purposes. PLC applications are expanding from HV transmission lines to low-voltage power distribution networks, where they will be used for automated meter reading, revenue billing, selective load shedding, and control of distribution system operations.

New areas of application not even thought of at this time will probably occur. In summary, it can be said that the explosive use of communications affecting all areas of the frequency spectrum will naturally extend to the PLC communications field.

11.5 Digital PLC

Since the inception of PLC in the 1930s, the modulation technique has been analog. First, using double sideband (AM) and then in the late 1940s, single sideband.

With the evolution of digital technology, solutions became available to address the two most significant limitations of analog PLC—the limitation of channels through limited available bandwidth and service congestion, and the ever present noise. DPLC can fundamentally provide more channels in a given

Copyright © 2005 IEEE. All rights reserved.

Copyright The Institute of Electrical and Electronics Engineers, Inc.
Provided by IHS under license with IEEE
No reproduction or networking permitted without license from IHS
Not for Resale

frequency bandwidth, and it can repeat frequencies at much closer line spacings than for previous technologies. Stable operation can also be achieved at SNR levels substantially better than for analog systems. However, there are no standards or long established practices, and therefore, it is not surprising that development houses have conceived a variety of different products with different methodologies. Indeed, the term *digital PLC* can have a variety of meanings, including a PLC carrying digital service information through to a fully digitally modulated transmission. Until the market for these products settles, the variety of offerings can be expected to continue.

Current systems use the following techniques:

a) Sophisticated speech coding techniques

b) The same frequency band for go and return paths with echo canceling and signal processing

c) Techniques to separate the paths

d) Analog modulation for the command signal for teleprotection

Fundamental differences with existing equipment are as follows:

— One technique limits the design to an 8 kHz bandwidth (a direct replacement for a 4 + 4 kHz analog channel) and packs in as many speech-equivalent channels as possible.

— The other technique assumes a compatibility with ISDN as a necessity and uses the bandwidth necessary to accommodate a B + D channel (in fact, a 16 kHz slot).

It can be expected that DPLC will become more dominant in the future as its advantages are more widely known and as technology improves. For more information, see Jordan and Olsen [B105], [B106], and [B107]; Castro et al. [B48]; and CIGRE WG 35.09 [B151].

Copyright © 2005 IEEE. All rights reserved.
Copyright The Institute of Electrical and Electronics Engineers, Inc.
Provided by IHS under license with IEEE
No reproduction or networking permitted without license from IHS
Not for Resale

Annex A

(informative)

Relative values conversion for decibels

A decibel is a logarithmic ratio of powers that expresses "gain" or "loss" (dB = 10 $\log_{10}$ (P_{out}/P_{in}) or dB = 20 $\log_{10}$ (V_{out}/V_{in}) only if $R_{in} = R_{out}$) (Table A.1). It is used in PLC systems to express bypass, coupling, shunt, and system losses. It also demonstrates path attenuation and reflected power (mismatch) and evaluates overall PLC system performance.

Table A.1—Table of decibel references

Power (dBm at 50 Ω or 600 Ω)	Power (W)	RMS voltage at 600 Ω	RMS voltage at 50 Ω	dBsr (50 Ω)[a]
50	100	244.95	70.71	39.2
40	10	77.46	22.36	29.2
30	1	24.49	7.07	19.2
20	0.1	7.75	2.24	9.2
10	0.01	2.45	0.707	–0.8
6	3.98E-03	1.55	0.446	–4.8
3	2.00E-03	1.09	0.316	–7.8
2	1.58E-03	0.975	0.282	–8.8
1	1.26E-03	0.869	0.251	–9.8
0	1.00E-03	0.775	0.224	–10.8
–1	7.94E-04	0.69	0.199	–11.8
–2	6.31E-04	0.615	0.178	–12.8
–3	5.01E-04	0.548	0.158	–13.8
–4	3.98E-04	0.489	0.141	–14.8
–5	3.16E-04	0.436	0.126	–15.8
–6	2.51E-04	0.388	0.112	–16.8
–7	2.00E-04	0.346	0.1	–17.8

Copyright © 2005 IEEE. All rights reserved.

Copyright The Institute of Electrical and Electronics Engineers, Inc.
Provided by IHS under license with IEEE
No reproduction or networking permitted without license from IHS
Not for Resale

Table A.1—Table of decibel references *(continued)*

Power (dBm at 50 Ω or 600 Ω)	Power (W)	RMS voltage at 600 Ω	RMS voltage at 50 Ω	dBsr (50 Ω)[a]
–8	1.58E-04	0.308	0.089	–18.8
–9	1.26E-04	0.275	0.079	–19.8
–10	1.00E-04	0.245	0.071	–20.8
–15	3.16E-05	0.138	0.04	–25.8
–20	1.00E-05	0.077	0.022	–30.9
–25	3.16E-06	0.044	0.013	–35.6
–30	1.00E-06	0.024	0.0071	–40.6
–35	3.16E-07	0.014	0.004	–45.9
–40	1.00E-07	0.0077	0.0022	–50.9

[a]In the case shown, this is the dBm when measuring voltage across 50 Ω and the instrument used is calibrated to read dBm for voltages across 600 Ω. dBsr refers to the term *dB scale reading*.

Solving for decibel using Watts

$$\mathrm{dB} = 10\log_{10}\left(\frac{W_{\mathrm{out}}}{W_{\mathrm{in}}}\right) \tag{54}$$

Solving for decibel using volts or current (only if $R_{\mathrm{in}} = R_{\mathrm{out}}$)

$$\mathrm{dB} = 20\log_{10}\left(\frac{V_{\mathrm{out}}}{V_{\mathrm{in}}}\right) \tag{55}$$

$$\mathrm{dB} = 20\log_{10}\left(\frac{I_{\mathrm{out}}}{I_{\mathrm{in}}}\right) \tag{56}$$

Correction factor other than 600 Ω:

$$\mathrm{dB} = 10\log_{10}\left(\frac{600}{R_{\mathrm{out}}}\right) \tag{57}$$

Solving for E

$$V = \sqrt{W \times R} \tag{58}$$

Example for 50 Ω: 1 and 10 W:

$V = \sqrt{1 \times 50} = 7.07$ V

$V = \sqrt{10 \times 50} = 22.36$ V

--`,,`,`,-`-`,,`,,`,`,,`---
Copyright © 2005 IEEE. All rights reserved.
Copyright The Institute of Electrical and Electronics Engineers, Inc.
Provided by IHS under license with IEEE
No reproduction or networking permitted without license from IHS
Not for Resale

Example for 600 Ω: 1 and 10 W:

$$V = \sqrt{1 \times 600} = 24.49 \text{ V}$$

$$V = \sqrt{10 \times 600} = 77.45 \text{ V}$$

Solving for *W:*

$$W = \frac{V^2}{R} \tag{59}$$

Solving for *R:*

$$R = \frac{V^2}{W} \tag{60}$$

A word about dBsr (Table A.2):

— dBsr is a unit of voltage.

— Definition:

$$\text{dBsr} = 20\log\left(\frac{V}{0.775}\right) \tag{61}$$

0 dBsr = 0.775 V

— dBsr is read directly on the decibel scale of an instrument calibrated to read 0 dBm when measured across 600 Ω.

— To convert dBsr to dBm, the circuit impedance must be known.

$$\text{dBm} = \text{dBsr} + 10\log\left(\frac{600}{R}\right) \tag{62}$$

Definitions:

dBm: Decibels above or below 1 mW.

dBw: Decibels above or below 1 W.

dBv: Decibels above or below a reference voltage of 1 V.

dBc: Decibels above or below a reference voltage of 0.775 V RMS.

dBa: Decibels above reference noise adjusted (0 dBa = –85 dBm at 1 kHz).

dBsr: Decibels as read on an instrument scale (decibel scale reading). This term comes about from measuring voltage in a 50 Ω circuit with an instrument calibrated to read dBm when used in a 600 Ω circuit.

dBrn: Decibels above reference noise (0 dBrn = –90 dBm; 1 pW).

Copyright © 2005 IEEE. All rights reserved.

Copyright The Institute of Electrical and Electronics Engineers, Inc.
Provided by IHS under license with IEEE
No reproduction or networking permitted without license from IHS
Not for Resale

Table A.2—dBSR to dBm correction factors

R **(Ω)**	**10 log (600/*R*) (dB)**
1000	–2.2
600	0.0
150	+6.0
75	+9.0
50	+10.8

--`,,`,`,,`,-`-`,,`,,`,`,,`---
Copyright © 2005 IEEE. All rights reserved.
Copyright The Institute of Electrical and Electronics Engineers, Inc.
Provided by IHS under license with IEEE
No reproduction or networking permitted without license from IHS
Not for Resale

Annex B

(informative)

Bibliography

[B1] Adams, A. W., "Field tests and operating experience with carrier transfer trip relaying for line protection," *AIEE Transactions on Power Apparatus and Systems*, vol. 76, Part III, pp. 556–562, 1957.

[B2] Agnew, T. I., and Collins, D. A., "Carrier current coupling from a grounded static wire," *IEEE Transactions on Power Apparatus and Systems*, vol. 86, pp. 1210–1215, 1967.

[B3] AIEE Committee Report, "Evaluation of transfer-trip relaying using power-line carrier," *AIEE Transactions on Power Apparatus and Systems*, vol. 81, Part III, pp. 250–259, 1962.

[B4] AIEE Committee Report, "Experience and reliability of carrier-relaying channels," *AIEE Transactions on Power Apparatus and Systems*, vol. 72, Part III, pp. 1223–1227, 1953.

[B5] AIEE Committee Report, "Guide to application and treatment of channels for power-line carrier," *AIEE Transactions on Power Apparatus and Systems*, vol. 73, Part III, pp. 417–436, 1954.

[B6] AIEE Committee Report, "Proposed definitions related to power line carrier," *AIEE Transactions on Power Apparatus and Systems*, vol. 71, Part III, pp. 424–428, 1952.

[B7] AIEE Committee Report, "Report of methods of measurement for the application of power line carrier," *AIEE Transactions on Power Apparatus and Systems*, vol. 80, Part III, pp. 1046–1052, 1961.

[B8] AIEE Committee Report, "Report on method of measurements at carrier-current frequencies," *AIEE Transactions on Power Apparatus and Systems*, vol. 67, pp. 1429–1432, 1948.

[B9] Alsleben, E., and Schumm, E., Schutssignalubertragung auf Hochspannungsleitugen. ETZ, B19, no. 4, pp. 89–95.

[B10] Anonymous, "Carrier relay equipment provides two independent channels," *Silent Sentinels* (Publication of Westinghouse Electric Corp.), vol. 1, May 1943.

[B11] Anonymous, "Carrier control isolates trouble on tap lines," *Electrical World*, vol. 103, p. 469, Mar. 1934.

[B12] Anonymous, "Interplant telephone communications established over high tension wires," *Electrical World*, vol. 76, p. 141, July 1923.

[B13] Anonymous, "Long-distance carrier current record," *Electrical World*, vol. 81, p. 1053, May 1923.

[B14] Anonymous, "Notable features of the Boulder Dam-Los Angeles Power System—carrier current," *The Electrical Journal*, vol. 33, pp. 501–503, Nov. 1936.

[B15] Anonymous, "Power line telephony," *Electrical World*, vol. 82, p. 96, July 14, 1923.

[B16] Anonymous, "Type JY power line carrier equipment," *Silent Sentinels* (Publication of Westinghouse Electric Corp.), vol. 1, no. 3, July 1944.

Copyright © 2005 IEEE. All rights reserved.

Copyright The Institute of Electrical and Electronics Engineers, Inc.
Provided by IHS under license with IEEE
No reproduction or networking permitted without license from IHS
Not for Resale

[B17] Anonymous, "Baltimore-Holtwood carrier current giving excellent service," *Electrical World*, vol. 81, pp. 1077–1081, May 12, 1923.

[B18] Anonymous, "Dr. Fuller joins General Electric," *Electrical World*, vol. 81, p. 243, January 27, 1923.

[B19] Applied Protective Relaying, Westinghouse Electric Corporation, 1982.

[B20] Austin, E., "Carrier-current communication over high voltage transmission lines," *General Electric Review*, vol. 26, pp. 424–435, June 1923.

[B21] Bacon, G. H., Hedrick, D. L., Fiedler, H. J., and Molnar, A. J., "Power line carrier application considerations involving HVDC transmission," *IEEE Transactions on Power Apparatus and Systems*, vol. 79, pp. 263–265, 1979.

[B22] Bagwell, A. B., and Dobson, H. I., "Use of carrier line traps with no tuning packs." IEEE Transaction Paper T 72 002-9, IEEE PES Winter Meeting, 1972.

[B23] Barnes, H. C., and Kennedy, L. F., "All-electronic carrier-relaying reduces fault-clearing time," *AIEE Transactions on Power Apparatus and Systems*, vol. 73, Part III, pp. 170–173, 1954.

[B24] Barnes, H. C., and MacPherson, R. H., "Field experience—electronic mho distance relay," *AIEE Transactions on Power Apparatus and Systems*, vol. 72, Part III, pp. 857–865, 1953.

[B25] Becker, J. A., "New method of calculating carrier-current attenuation," *AIEE Transactions on Power Apparatus and Systems*, vol. 71, Part III, pp. 787–796, 1952.

[B26] Beckwith, R. W., "A new carrier-current frequency-shift system for use with differential protection of transformer banks," *AIEE Transactions on Power Apparatus and Systems*, vol. PAS-70, pp. 832–835, 1951.

[B27] Beckwith, R. W., "Characteristics of new carrier-current equipment for telemetering and load control," *AIEE Transactions on Power Apparatus and Systems*, vol. 67, pp. 1649–1653, 1948.

[B28] Beckwith, R. W., "Frequency-shift, carrier-current equipment for telemetering and other control type functions," *AIEE Transactions on Power Apparatus and Systems*, vol. 71, Part III, pp. 837–839, 1952.

[B29] Beckwith, R. W., "R-F hybrids used for paralleling terminal equipment for closely-spaced carrier channels," *AIEE Transactions on Power Apparatus and Systems*, vol. 71, Part III, pp. 1085–1088, 1952.

[B30] Beckwith, R. W., Pinkerton, D. C., and Murray, C. H., "Attenuation measurements of Bureau of Reclamation 'Alva B. Adams' tunnel, 69-kV cable," *AIEE Transactions on Power Apparatus and Systems*, vol. 75, Part III, pp. 367–370, 1956.

[B31] Belt, T. A. E., "Coupling capacitors for carrier-current applications," *AIEE Transactions on Power Apparatus and Systems*, vol. 47, pp. 31–37, 1928.

[B32] Bienhoff, M. G., "Power-line carrier coupling—an analysis," *AIEE Transactions on Power Apparatus and Systems*, vol. 74, Part III, pp. 1163–1170, 1955.

[B33] Boddies, C. A., and Curtis, R. C., "The transmission of high-frequency currents for communication over existing power networks," *AIEE Transactions on Power Apparatus and Systems*, vol. 48, pp. 227–235, 1929.

[B34] Boddie, C. A., "Largest system of power line telephony," *Electrical World*, vol. 83, Mar. 13, 1926.

Copyright © 2005 IEEE. All rights reserved.

Copyright The Institute of Electrical and Electronics Engineers, Inc.
Provided by IHS under license with IEEE
No reproduction or networking permitted without license from IHS
Not for Resale

[B35] Boddie, C. A., and Coke, M. W., "Limitations of carrier-current telephony," *Electrical World*, vol. 81, pp. 909–913, Apr. 21, 1923.

[B36] Bostwick, M. A., and Harder, E. L., "Protection of three-terminal lines," *Westinghouse Engineer*, pp. 76–79, Aug. 1943.

[B37] Bostwick, M. A., and Harder, E. L., "Relay protection of tapped transmission lines," *AIEE Transactions on Power Apparatus and Systems*, vol. 62, pp. 645–650, 1943.

[B38] Bozoki, B., "Effects of noise on transfer-trip carrier relaying," *IEEE Transactions on Power Apparatus and Systems*, vol. 87, pp. 173–179, 1968.

[B39] Bozoki, B., and Jones, D. E., "Power line carrier coupling investigations on a 500-kV line," *IEEE Transactions on Power Apparatus and Systems*, vol. 84, pp. 197–200, 1965.

[B40] Brestkina, E. E., "Measurement and calculation of intrabundle HF communication paths," CIGRE Paper 35-03, Paris, France, Aug. 21–29, 1974.

[B41] Brinton, R. L., "Modern carrier test equipment and its application," *AIEE Transactions on Power Apparatus and Systems*, vol. 69, pp. 777–780, 1950.

[B42] Brown, M. J., "Power-line carrier channels," *AIEE Transactions on Power Apparatus and Systems*, vol. 64, pp. 246–250, 1945.

[B43] Brown, R. W., and Kopsichke, G. I., "A new high-pass coupling network for power-line carrier operation—field test report," *IEEE Transactions on Power Apparatus and Systems*, vol. 86, pp. 563–567, 1967.

[B44] Browne, O. A., and Vest, Jr., W. L., "A carrier current relay installation," *AIEE Transactions on Power Apparatus and Systems*, vol. 54, pp. 109–115, 1935.

[B45] Buckley, J. L., "220-kV carrier current relaying on Pacific Gas and Electric Company's transmission system," *Electrical West*, vol. 94, pp. 74–76, May 1945.

[B46] Carter, C. F., "Carrier-current communications over transmission lines," *General Electric Review*, vol. 29, p. 833, Dec. 1926.

[B47] Carter, J. C. G., "Planning the carrier facilities for a utility system," *AIEE Transactions on Power Apparatus and Systems*, vol. 73, Part III, pp. 447–455, 1954.

[B48] Castro, F., Lopez, M., and Selga, J. M., "ISDN transmission over power lines; new digital power line carriers for digital networks," CIGRE SC35 Colloquium, Madrid, Spain, Paper D11, 1995.

[B49] CIGRE Committee Report, Guide on Power Line Carrier, 1979.

[B50] Chambers, F., Hammer, O. S. C., and Edwards, L., "Tennessee Valley Authority's 500-kV system plans and considerations," *IEEE Transactions on Power Apparatus and Systems*, vol. 85, pp. 22–27, 1966.

[B51] Cheek, R. C., "A comparison of the amplitude-modulation, frequency-modulation, and single-side-band systems for power-line carrier transmission," *AIEE Transactions on Power Apparatus and Systems*, vol. 64, pp. 215–220, discussion 450–452, 1945.

[B52] Cheek, R. C., and Blackburn, J. L., "Considerations in selecting a carrier relaying system," *AIEE Transactions on Power Apparatus and Systems*, vol. 71, Part III, pp. 10–18, 1952.

Copyright © 2005 IEEE. All rights reserved.

Copyright The Institute of Electrical and Electronics Engineers, Inc.
Provided by IHS under license with IEEE
No reproduction or networking permitted without license from IHS
Not for Resale

[B53] Cheek, R. C., and Derr, W. A., "The combination of supervisory control with other functions on power-line carrier channels," *AIEE Transactions on Power Apparatus and Systems*, vol. 64, pp. 241–246, 1945.

[B54] Cheek, R. C., and Monahan, J. D., "A study of carrier-frequency noise on power lines—Part I: theoretical considerations and measuring techniques," *AIEE Transactions on Power Apparatus and Systems*, vol. 70, pp. 1127–1133, 1951.

[B55] Cheek, R. C., and Moynihan, J. D., "A study of carrier-frequency noise on power lines—Part II: results of field measurements," *AIEE Transactions on Power Apparatus and Systems*, vol. 70, pp. 1325–1334, 1951.

[B56] Comerford, T. J., "Carrier signal attenuation measurements," Pennsylvania Electric Association Meeting, Bedford Springs, PA, May 23–24, 1974.

[B57] Combs, E. E., "Power line carrier coupling—a new look at the tuned type," *IEEE Transactions on Power Apparatus and Systems*, vol. 87, pp. 407–420, 1968.

[B58] Combs, E. E., "A new high-pass coupling network for power line carrier operation—design considerations," *IEEE Transactions on Power Apparatus and Systems*, vol. 86, pp. 1522–1527, 1967.

[B59] Cordray, R. E., and Warrington, A. R. V., "The MHO-carrier relaying scheme—a simplified carrier scheme for long or heavily-loaded transmission lines," *AIEE Transactions on Power Apparatus and Systems*, vol. 63, pp. 228–235, discussion 434–436, 1944.

[B60] Cramer, T. A., "Carrier-current differential protection for transformer banks," *AIEE Transactions on Power Apparatus and Systems*, vol. 62, pp. 545–548, discussion 947–948, 1943.

[B61] Cramer, T. A., and Krings, F. C., "Future application needs of carrier pilot relaying," *AIEE Transactions on Power Apparatus and Systems*, vol. 74, Part III, pp. 1233–1236, 1955.

[B62] Crellin, E. A., "Some experiences with a 202-mile carrier-current telephone," *AIEE Transactions on Power Apparatus and Systems*, vol. XLII, pp. 1086–1088, 1923.

[B63] Crichton, L. N., and Graves, Jr., H. C., "The application of relays for the protection of power system interconnections," *AIEE Transactions on Power Apparatus and Systems*, vol. 47, pp. 259–271, 1928.

[B64] Cummings, B. R., "Carrier current communication," *General Electric Review*, vol. 29, p. 365, May 1926.

[B65] Dobson, H. I., "Experiences with broad-band tuning," *AIEE Transactions on Power Apparatus and Systems*, vol. 77, Part III, pp. 1650–1658, 1958.

[B66] Dols, K. K., Rydeen, V. C., Elliott, L. C., and Hinman, W. L., "Protection principles for the 345-kV Minneapolis-Iowa-St. Louis interconnection," Proceedings of the American Power Conference, vol. XXIX, pp. 1109–1117, 1967.

[B67] Doolittle, F. B., "For better use of investment in coupling capacitors (for carrier current relay protection)," *Electrical World*, vol. 103, pp. 256–257, Feb. 1934.

[B68] Doremus, J. A., "A power line carrier system for maximum channel utilization," *AIEE Transactions on Power Apparatus and Systems*, vol. 71, Part III, pp. 429–441, 1952.

Copyright © 2005 IEEE. All rights reserved.

Copyright The Institute of Electrical and Electronics Engineers, Inc.
Provided by IHS under license with IEEE
No reproduction or networking permitted without license from IHS
Not for Resale

[B69] Doremus, J. A., Crow, R. P., and Freeman, W. H., "A broad-band coupling unit for power-line carrier with associated potential device," *AIEE Transactions on Power Apparatus and Systems*, vol. 71, Part III, pp. 870–887, 1952.

[B70] Eby, E. D., "A new carrier-current coupling capacitor," *AIEE Transactions on Power Apparatus and Systems*, vol. 54, pp. 848–852, 1935. (See also discussion in vol. 55, p. 281, 1936.)

[B71] EHV Transmission Line Reference Book. New York: Edison Electric Institute, 1968.

[B72] Farmer, G. E., "The use of insulated ground wires on a transmission line for communications channels," *IEEE Transactions on Power Apparatus and Systems*, vol. 82, pp. 884–891, Dec. 1963.

[B73] Feaster, W. C., and Schenneman, E. E., "Application of transistors in power-line carrier relaying," *AIEE Transactions on Power Apparatus and Systems*, vol. 75, Part III, pp. 976–979, 1956.

[B74] Fitzgerald, A. S., "A carrier-current pilot system of transmission line protection," *AIEE Transactions on Power Apparatus and Systems*, vol. 47, pp. 22–30, 1928.

[B75] Freeman, W. H., "A new approach to power-line carrier system optimization," *AIEE Transactions on Power Apparatus and Systems*, vol. 76, Part III, pp. 99–103, 1957.

[B76] Friedman, W., Robertson, A. N., and Stillhard, C., "765-kV power line carrier communication—Part II: experimental determination of power line carrier parameters," *IEEE Transactions on Power Apparatus and Systems*, vol. 91, pp. 580–586, 1972.

[B77] Fuller, L. F., and Tolson, W. A., "Power line carrier telephony," *AIEE Transactions on Power Apparatus and Systems*, vol. 48, pp. 102–106, 1929.

[B78] Fuller, L. P., "Recent developments in carrier-current communications," *AIEE Transactions on Power Apparatus and Systems*, vol. XLII, pp. 1082–1085, 1923.

[B79] Goldsborough, S. L., "Carrier current relaying improved," *Electrical World*, vol. 113, p. 156, Jan. 1940.

[B80] Gunter, F. B,. "The application of power-line carrier-coupling equipment to typical field installations," *AIEE Transactions on Power Apparatus and Systems*, vol. 71, Part III, pp. 866–870, 1952.

[B81] Gunter, F. B., "A flexible new line of power-line carrier equipment," *AIEE Transactions on Power Apparatus and Systems*, vol. 72, Part III, pp. 573–581, 1953.

[B82] Halman, T. R., Goldsborough, S. L., Lensner, H. W., and Drompp, A. F., "A new carrier relaying scheme," *AIEE Transactions on Power Apparatus and Systems*, vol. 63, pp. 568–572, discussion 1423–1426, 1944.

[B83] Hampe, G. W., and Storer, B. W., "Power line carrier for relaying and joint usage—Part I," *AIEE Transactions on Power Apparatus and Systems*, vol. 68, Part II, pp. 864–872, 1949.

[B84] Hampe, G. W., and Storer, B. W., "Power line carrier for relaying and joint usage—Part III: a survey of modern power-line carrier systems," *AIEE Transactions on Power Apparatus and Systems*, vol. 71, Part III, pp. 661–670, 1952.

[B85] Harder, E. L., Lenehan, B. E., and Goldsborough, S. L., "A new high-speed distance-type carrier-pilot relay system," *AIEE Transactions on Power Apparatus and Systems*, vol. 57, pp. 5–10, discussion 291–294, 1938.

Copyright © 2005 IEEE. All rights reserved.

Copyright The Institute of Electrical and Electronics Engineers, Inc.
Provided by IHS under license with IEEE
No reproduction or networking permitted without license from IHS
Not for Resale

[B86] Hasler, E. F., "The design and predicted performance of intra-bundle insulation," *IEEE Transactions on Power Apparatus and Systems*, vol. 94, pp. 338–343, 1975.

[B87] Hasler, E. F., Martin, R. E., and Pullen, F. D., "Communication systems using bundle conductor overhead power lines," *IEEE Transactions on Power Apparatus and Systems*, vol. PAS-94, pp. 344–349, Mar./Apr. 1975.

[B88] Hedman, D. E., "Propagation on overhead transmission lines—I: theory of modal analysis," *IEEE Transactions on Power Apparatus and Systems*, vol. 84, pp. 200–205, 1965.

[B89] Hedman, D. E., "Propagation on overhead transmission lines—II: earth conduction effects and practical results," *IEEE Transactions on Power Apparatus and Systems*, vol. 84, pp. 205–211, 1965.

[B90] Hedrick, D. L., Wetherall, D. L., and Robertson, A. N., "765-kV power line carrier communications—III: equipment development and design," *IEEE Transactions on Power Apparatus and Systems*, vol. 91, pp. 587–591, 1972.

[B91] Herbert, D. O., and Carter, J. C. G., "An objective study of power-line carrier coupling methods," *AIEE Transactions on Power Apparatus and Systems*, vol. 73, Part III, pp. 1180–1184, 1954.

[B92] Hirtler, R. W., "An automatic trip-and-carrier test for phase-comparison carrier-current relays," *AIEE Transactions on Power Apparatus and Systems*, vol, 78, Part III, pp. 1072–1075, 1959.

[B93] Hodges, M. E., and MacPherson, R. H., "All-electronic 1-cycle carrier-relaying equipment—relay operating principles," *AIEE Transactions on Power Apparatus and Systems*, vol. 73, Part III, pp. 174–186, 1954.

[B94] Hunt, L. F., and Kroneberg, A. A., "Some recent relay developments," *AIEE Transactions on Power Apparatus and Systems*, vol. 53, pp. 530–535, 1934.

[B95] IEEE 100, The Authoritative Dictionary of IEEE Standards Terms.

[B96] IEEE Committee Report, "Bibliography of carrier, microwave, and wire line literature applicable to power systems," *IEEE Transactions on Power Apparatus and Systems*, vol. 84, pp. 216–219, 1965.

[B97] IEEE Committee Report, "Guide for measurements on power-line carrier systems," *IEEE Transactions on Power Apparatus and Systems*, vol. 86, pp. 1587–1592, 1967.

[B98] Johnson, F. D., Lindsey, E. W., and Neri, Z., "A new carrier current line trap for power-line applications," *AIEE Transactions on Power Apparatus and Systems*, vol. 73, Part III, pp. 578–582, 1954.

[B99] Johnson, Jr., T., "Recent developments in power line carrier," *AIEE Transactions on Power Apparatus and Systems*, vol. 53, pp. 542–547, discussion 1325, 1934.

[B100] Jones, D. E., "Operation of a power line carrier system during sustained line faults," *AIEE Transactions on Power Apparatus and Systems*, vol. 79, Part III, pp. 556-560, 1960.

[B101] Jones, D. E., "Staged fault tests with power-line carrier transferred-trip relaying for line protection," *AIEE Transactions on Power Apparatus and Systems*, vol. 78, Part III, pp. 588–595, 1959.

[B102] Jones, D. E., and Bozoki, B., "Experimental evaluation of power-line carrier propagation on a 500-kV line," *IEEE Transactions on Power Apparatus and Systems*, vol. 63, p. 935, 1963.

Copyright © 2005 IEEE. All rights reserved.

Copyright The Institute of Electrical and Electronics Engineers, Inc.
Provided by IHS under license with IEEE
No reproduction or networking permitted without license from IHS
Not for Resale

[B103] Jones, D. E., and Bozoki, B., "Experimental determination of power-line carrier propagation on a 500-kV line," *IEEE Transactions on Power Apparatus and Systems*, vol. 83, pp. 16–23, 1964.

[B104] Jones, D. E., and Waddington, P. W., "Coupling methods for power-line carrier systems," *AIEE Transactions on Power Apparatus and Systems*, vol. 76, Part III, pp. 1284–1287, 1957.

[B105] Jordan, T., and Olsen, T., "Digital PLC, a versatile concept for digital and analogue networks," CIGRE SC35 Colloquium, Adelaide, Australia, Paper D2, 1993.

[B106] Jordan, T., and Olsen, T., "The first generation digital power line carrier, functionality and performance," CIGRE Session, Paris, France, Paper 35-105, 1994.

[B107] Jordan, T., and Olsen, T., "Some terminology issues concerning digital PLC," CIGRE SC35 Colloquium, Madrid, Spain, Paper D11, 1995.

[B108] Kennedy, L. F., and Bancker, E. H., "Carrier pilot relaying," AIEE Miscellaneous Paper 39-87, Mar. 1939.

[B109] Kennefake, E. W., "Frequency modulation for power-line carrier current," *AIEE Transactions on Power Apparatus and Systems*, vol. 62, pp. 616–620, 1943.

[B110] Keyser, G. M., and Hicks, R. L., "A directional coupler for power line carrier," *IEEE Transactions on Power Apparatus and Systems*, vol. 84, pp. 211–215, 1965.

[B111] Kinghorn, J. H., "Relay protection for medium-length high-voltage transmission lines," *AIEE Transactions on Power Apparatus and Systems*, vol. 69, pp. 461–467, 1950.

[B112] Koontz, Jr., J. A., "Carrier-current telephony on the high voltage lines of the Great Western Power Company," *AIEE Transactions on Power Apparatus and Systems*, vol. XLII, pp. 1089–1090, 1923.

[B113] Krings, F. C., "Carrier-relaying frequency assignments reduced to numbers," *AIEE Transactions on Power Apparatus and Systems*, vol. 76, Part III, pp. 10–14, 1957.

[B114] Krings, F. C., and Woodruff, J. L., "Analysis of losses in power-line carrier coupling networks," *AIEE Transactions on Power Apparatus and Systems*, vol. 73, Part III, pp. 1213–1218, 1954.

[B115] Laughlin, J. D., Pakala, W. E., and Reagan, M. E., "Carrier current losses measured and interference minimized on Boulder Dam-Los Angeles transmission lines," *AIEE Transactions on Power Apparatus and Systems*, vol. 59, pp. 4–10, 1940.

[B116] Lautensach, H., Martin, R. E., Nocker, H., and Schumm, E., "Intabundle carrier communication using the insulated bundle conductors of a power line," CIGRE Paper 35-04, Paris, France, Aug. 30–Sept. 7, 1978.

[B117] Lee, R., "Design of the adjustable Li-O-phase filter," *AIEE Transactions on Power Apparatus and Systems*, vol. 74, Part III, pp. 272–277, 1955.

[B118] Lenehan, B. E., "A new single-side-band carrier system for power lines," *AIEE Transactions on Power Apparatus and Systems*, vol. 66, pp. 826–830, 1947.

[B119] Lensner, H. W., "Operation of power line carrier channels," *AIEE Transactions on Power Apparatus and Systems*, vol. 66, pp.888–894, 1947.

Copyright © 2005 IEEE. All rights reserved.

--`,,`,`,-`-`,,`,,`,`,,`---
Copyright The Institute of Electrical and Electronics Engineers, Inc.
Provided by IHS under license with IEEE
No reproduction or networking permitted without license from IHS
Not for Resale

[B120] Lensner, H. W., "Phase-comparison carrier relaying for three-terminal lines," *AIEE Transactions on Power Apparatus and Systems*, vol. 72, Part III, pp. 697–702, 1953.

[B121] Lensner, H. W., and Singel, J. B., "A versatile power-line carrier system," *AIEE Transactions on Power Apparatus and Systems*, vol. 63, pp. 129–133, discussion 437–439, 1944.

[B122] Leyland, S. C., "One carrier relay for 'phase and ground'," *Electrical World*, vol. 121, pp. 128, 130, May 13, 1944.

[B123] Leyland, S. C., and Goldsborough, S. L., "The functions of ground preference in carrier-current relay schemes," *AIEE Transactions on Power Apparatus and Systems*, vol. 63, pp. 97–99, discussion 437, 1944.

[B124] Logan, J. T., "Fault current polarities compared by carrier," *Electrical World*, vol. 121, no. 16, p. 1408, April 15, 1944.

[B125] MacPherson, R. H., Warrington, A. R. V., and McConnell, A. J., "Electronic protective relays," *AIEE Transactions on Power Apparatus and Systems*, vol. 67, pp. 1702–1708, 1948.

[B126] Marter, W. E., "Transmission-line protection of short lines of the metropolitan area of a typical system," *AIEE Transactions on Power Apparatus and Systems*, vol. 69, pp. 468–472, 1950.

[B127] McConnell, A. J., Cramer, T. A., and Seeley, H. T., "Phase-comparison carrier-current relaying," *AIEE Transactions on Power Apparatus and Systems*, vol. 64, pp. 825–832, discussion 973–975, 1945.

[B128] McConnell, A. J., "Electronic relaying," Proceedings of Georgia Tech Protective Relay Conference, Atlanta, GA, May 1954.

[B129] Merritt, M. S., and Talmage, T. D., "Carrier current solves TVA relaying and communications problems," *Electric Light and Power*, vol. 20, pp. 48–57, Sept. 1942.

[B130] Miller, R. H., and Prud'Homme, E. S., "Field tests on power-line carrier-current equipment," *AIEE Transactions on Power Apparatus and Systems*, vol. 65, pp. 824–828, discussion 1177–1178, 1946.

[B131] Miller, R. H., and Worthington, A. R., "Measurements and tests on a power line carrier relaying system," *AIEE Transactions on Power Apparatus and Systems*, vol. 70, pp. 1005–1007, 1951.

[B132] Miller, R. H., "A proposal for broad-band coupling of power-line carrier equipment," *AIEE Transactions on Power Apparatus and Systems*, vol. 68, Part II, pp. 1028–1031, 1949.

[B133] Morgan, W. A., and Evans, B., "Relaying difficulties disclosed by staged fault tests," *AIEE Transactions on Power Apparatus and Systems*, vol. 67, pp. 73–82, 1948.

[B134] Moynihan, J. D., "Application of line traps to power-line carrier systems," *AIEE Transactions on Power Apparatus and Systems*, vol. 71, Part III, pp. 1058–1062, 1952.

[B135] Moynihan, J. D., and Allyn, E. G., "The application of power-line carrier to a combined cable and overhead circuit," *AIEE Transactions on Power Apparatus and Systems*, vol. 75, Part III, pp. 243–248, 1956.

[B136] Moynihan, J. D., and Sparlin, B. J., "A study of carrier-frequency noise on power lines—Part III: interpretation of field measurements," *AIEE Transactions on Power Apparatus and Systems*, vol. 72, Part III, pp. 573–581, 1953.

Copyright © 2005 IEEE. All rights reserved.

Copyright The Institute of Electrical and Electronics Engineers, Inc.
Provided by IHS under license with IEEE
No reproduction or networking permitted without license from IHS
Not for Resale

[B137] Moynihan, J. D., and Sparlin, B. J., "A study of carrier-frequency noise on power lines—Part IV: conclusion of field measurements," *AIEE Transactions on Power Apparatus and Systems*, vol. 74, Part III, pp. 795–800, 1955.

[B138] Neher, J. H., "The use of communication facilities in transmission line relaying," *AIEE Transactions on Power Apparatus and Systems*, vol. 52, pp. 595–606, 1933.

[B139] Perz, M. C., "A method of analysis of power line carrier problems on three-phase lines," *IEEE Transactions on Power Apparatus and Systems*, vol. 83, pp. 686–691, 1964.

[B140] Perz, M. C., "Analytical determination of high-frequency propagation on ice-covered conductors," *IEEE Transactions on Power Apparatus and Systems*, vol. 87, pp. 695–703, 1968.

[B141] Perz, M. C., "Natural mode of power line carrier on horizontal three-phase lines," *IEEE Transactions on Power Apparatus and Systems*. Paper No. 63-936, Apr. 1963.

[B142] Perz, M. C., "Power line carrier on insulated bundle subconductors of DC and AC transmission lines," *IEEE Transactions on Power Apparatus and Systems*, vol. 87, pp. 162–173, 1968.

[B143] Pierce, R. E., Stewart, E. C., Powers, R. E., and Heberlein, G. E., "Carrier relaying and rapid reclosing at 110-kV," *AIEE Transactions on Power Apparatus and Systems*, vol. 55, pp. 1120–1129, 1936.

[B144] Pinkerton, D. C., "Practical use of selectivity data in spacing power-line carrier-current control channels," *AIEE Transactions on Power Apparatus and Systems*, vol. 73, Part III, pp. 955–958, 1954.

[B145] Hohn, J. W., Zipp, J. A., Baumgartner, E. A., Burnett, R. O., Drum, P. R., Hemming, D. R., Huddleston, J. D., III, Ingleson, J. W., Latham, J. R., Nelson, B. D., Ohnesorge, R. W., Pattman, A. H., Sage, E. T., and Udren, E. A., "Power line carrier practices and experiences," *IEEE Transactions on Power Delivery*, vol. 10, no. 2, 94 SM 428-3 PWRD, Apr. 1995.

[B146] Price, W. S., Cordray, R. E., and MacPherson, R. H., "Performance evaluation of all-electronic 1-cycle carrier relaying equipment," *AIEE Transactions on Power Apparatus and Systems*, vol. 73, Part III, pp. 187–195, 1954.

[B147] Pullen, F. D., "Wide bandwidth capabilities of intra-bundle communication on high voltage lines," *IEEE Transactions on Power Apparatus and Systems*, vol. 94, pp. 539–543, 1975.

[B148] Reagan, M. E., "Uses of carrier current," *The Electrical Journal*, vol. 33, pp. 276–279, Jun. 1936.

[B149] Reichman, J., "Insulated overhead ground wires—protective carrier relaying investigations," *IEEE Transactions on Power Apparatus and Systems*, vol. 87, pp. 179–187, 1968.

[B150] Reichman, J., "Using insulated overhead ground wires for carrier relaying," *Transmission and Distribution*, vol. 17, pp. 34–39, Nov. 1965.

[B151] *Relaying Communications Channels Application Guide*. Ontario, Canada: Trench Electric, 1999.

[B152] Report on Digital Power Line Carrier, CIGRE WG 35.09, Aug. 2000.

[B153] Rice, N. O., and Smith, J. S., "A phase-comparison carrier-current relaying system for broader application," *AIEE Transactions on Power Apparatus and Systems*, vol. 71, Part III, pp. 246–250, 1952.

[B154] Rives, F. M., "Application of carrier to power lines," *AIEE Transactions on Power Apparatus and Systems*, vol. 62, pp. 835–844, discussion 945–947, 1943.

Copyright © 2005 IEEE. All rights reserved.

Copyright The Institute of Electrical and Electronics Engineers, Inc.
Provided by IHS under license with IEEE
No reproduction or networking permitted without license from IHS
Not for Resale

[B155] Robertson, A. N., "765-kV power line carrier communications—I: theoretical considerations," *IEEE Transactions on Power Apparatus and Systems*, vol. 91, pp. 575–580, 1972.

[B156] Sanders, M. P., and Ray, R. E., "Power line carrier channel and application considerations for transmission relaying," Fiftieth Annual Conference on Protective Relaying, Georgia Institute of Technology, Atlanta, GA, May 1–3, 1996.

[B157] Sandstrom, P. N., and Foster, G. E., "Multichannel carrier-current facilities for a power line," *AIEE Transactions on Power Apparatus and Systems*, vol. 61, pp. 71–76, discussion 469, 1942.

[B158] Seeley, H. T., and Koss, N. A., "An all-electronic 1-cycle carrier relaying system—overall operating principles," *AIEE Transactions on Power Apparatus and Systems*, vol. 73, Part III, pp. 161–169, 1954.

[B159] Slaughter, N. H., and Wolfe, W. V., "Carrier telephone on power wires," *AIEE Transactions on Power Apparatus and Systems*, vol. XLIII, pp. 620–629, 1924.

[B160] Sleeper, H. P., and Van Zee, W. H., "Frequency-shift carrier scheme overcomes difficulties," *Electric Light and Power*, vol. 36, Sept. 1958.

[B161] Smith, J. S., "The relation between bandwidth and speed of response in power system control channels," *AIEE Transactions on Power Apparatus and Systems*, vol. 71, Part III, pp. 1047–1051, 1952.

[B162] Smith, R. M., and Goldsborough, S. L., "Possibilities and methods of extending a carrier-current relay channel to other uses," *AIEE Transactions on Power Apparatus and Systems*, vol. 60, pp. 23–27, discussion 645–646, 1941.

[B163] Sparlin, B. J., and Moynihan, J. D., "A method of measurement of carrier characteristics on power cables," *AIEE Transactions on Power Apparatus and Systems*, vol. 74, Part III, pp. 31–33, 1955.

[B164] Specht, T. R., and Cheek, R. C., "Carrier frequency characteristics of power transformers," *AIEE Transactions on Power Apparatus and Systems*, pp. 52–98, Dec. 1951.

[B165] Sporn, P., and Langdon, G. G., "Tube experience in carrier," *Electrical World*, vol. 105, pp. 27–29, Feb. 1935.

[B166] Sporn, P., and Muller, C. A., "Carrier current relaying simplified," *Electrical World*, vol. 102, pp. 556–560, Oct. 1933.

[B167] Sporn, P., and Muller, C. A., "Carrier-current relaying proves its effectiveness," *Electrical World*, vol. 100, pp. 332–336, Sept. 1932.

[B168] Sporn, P., and Muller, C. A., "One-cycle carrier relaying accomplished," *Electrical World*, vol. 105, pp. 26–28, Oct. 1935.

[B169] Sporn, P., and Muller, C. A., "The application and performance of carrier-current relaying," *AIEE Transactions on Power Apparatus and Systems*, vol. 57, pp. 118–124, discussion 281–284, 1938.

[B170] Sporn, P., and Wolford, R. H., "Experience with carrier-current communication on a high-tension interconnected system," *AIEE Transactions on Power Apparatus and Systems*, vol. 49, pp. 288–314, 1930.

[B171] Stauffacher, E. R., "Development of a relay protective system on the lines of the Southern California Edison Company, Ltd.," *AIEE Transactions on Power Apparatus and Systems*, vol. 50, pp. 80–88, 1931.

--`,,`,,`,`,,`---
Copyright © 2005 IEEE. All rights reserved.
Copyright The Institute of Electrical and Electronics Engineers, Inc.
Provided by IHS under license with IEEE
No reproduction or networking permitted without license from IHS
Not for Resale

[B172] Stauffacher, E. R., and Doolittle, F. B., "Carrier-current replaces relay pilot wire," *Electrical World*, vol. 95, no. 12, p. 580, Mar. 1930.

[B173] Sutton, H. J., "Application of relays on an EHV system," *IEEE Transactions on Power Apparatus and Systems*, vol. 86, pp. 408–415, 1967.

[B174] Sutton, H. J., "Line tuning equipment used with coaxial cable for carrier current installation on power lines," *AIEE Transactions on Power Apparatus and Systems*, vol. 68, pp. 44–49, 1949.

[B175] Swingle, T. M., and Dobson, H. I., "Communication circuits on 500-kV lines," *IEEE Transactions on Power Apparatus and Systems*, vol. 85, pp. 1059–1064, 1966.

[B176] Swingle, T. M., and Dobson, H. I., "TVA's 500-kV system—communications," *IEEE Transactions on Power Apparatus and Systems*, vol. 85, pp. 47–53, 1966.

[B177] Talmage, T. D., "Carrier channels for telemetering," *AIEE Transactions on Power Apparatus and Systems*, vol. 67, pp. 1448–1467, 1948.

[B178] Tatro, P. J., Adamson, K. A., Eitzmann, M. A., and Smead, M., "Power line carrier interference from HVDC converter terminals," *IEEE Transactions on Power Delivery*, vol. 8, no. 3, July 1993.

[B179] Traver, O. C., and Bancker, E. H., "A faster carrier pilot relay system," *AIEE Transactions on Power Apparatus and Systems*, vol. 55, pp. 688–696, 1936.

[B180] Traver, O. C., Auchinloss, J., and Bancker, E. H., "Pilot protection by power-directional relays using carrier current," *General Electric Review*, vol. 35, pp. 566–570, Nov. 1932.

[B181] Treasure, T. R., "Power line carrier experience on the Vancouver Island HVDC tie," *IEEE Transactions on Power Apparatus and Systems*. vol. PAS-98, Jan./Feb. 1979.

[B182] Udo, T., and Kawai, M., "Fault generated impulse noise voltage in a transmission line," *IEEE Transactions on Power Apparatus and Systems*, vol. PAS-86, Paper 31 TP 66-384, June 1967.

[B183] Walton, A. W., and Lensner, H. W., "System operation improved with carrier telemetering and load control," *AIEE Transactions on Power Apparatus and Systems*, vol. 67, pp. 1643–1648, 1948.

[B184] Westinghouse Electric Corporation, *Silent Sentinels*. Newark, NJ, 1949, ch. 8.

[B185] Westinghouse Electric Corporation, *Silent Sentinels*. Newark, NJ, 1949, ch. 17.

[B186] Williams, G. H., "Power-line communication system of the Southeastern Power and Light Company," *Electric Light and Power*, pp. 92–95, 116–117, June 1929.

[B187] Wohlgemuth, D. G., Gillies, D. A., and Dietrich, R. E., "Carrier-current transfer-trip-relaying field tests and operation experience," *AIEE Transactions on Power Apparatus and Systems*, vol. 81, Part III, pp. 225–235, 1962.

[B188] Wolfe, W. V., and Sarros, J. D., "Problems in power-line carrier telephony and recent developments to meet them," *AIEE Transactions on Power Apparatus and Systems*, vol. 48, pp.107–116, 1929.

[B189] Wolfe, W. V., and Evans, P. H., "Preliminary investigation of carrier telephony on power circuits—case #31996," Report of Joint experiment between Western Electric and the Georgia Railway and Power Company, Sept. 17, 1923.

Copyright © 2005 IEEE. All rights reserved.

Copyright The Institute of Electrical and Electronics Engineers, Inc.
Provided by IHS under license with IEEE
No reproduction or networking permitted without license from IHS
Not for Resale

[B190] Wood, E. M., Haberl, H. W., and Baily, F. A. A., "A new-type carrier relay protection," *AIEE Transactions on Power Apparatus and Systems*, vol. 62, pp. 774–779, discussion 986–988, 1943.

[B191] Wood, T. D., Jr., "Application and operating experience of carrier communications over insulated static wire," 1966 IEEE Winter Power Meeting, New York, NY, Paper 31-CP-66-41, Jan. 30–Feb. 4, 1966.

[B192] Woodcock, W. I., and Robinson, E. W., "Carrier-current and supervisory control on Alabama Power Company system," *AIEE Transactions on Power Apparatus and Systems*, vol. 48, pp. 214–226, discussion 236, 1929.

[B193] Woodworth, J. L., "Application of 720-cycle carrier to power distribution circuits," *AIEE Transactions on Power Apparatus and Systems*, vol. 62, pp. 903–915, discussion 1003–1006, 1943.

Copyright © 2005 IEEE. All rights reserved.

Copyright The Institute of Electrical and Electronics Engineers, Inc.
Provided by IHS under license with IEEE
No reproduction or networking permitted without license from IHS Not for Resale