IEEE Standards

62.2™

IEEE Guide for Diagnostic Field Testing of Electric Power Apparatus—Electrical Machinery

IEEE Instrumentation and Measurement Society

Sponsored by the
Electric Machinery Committee

IEEE

3 Park Avenue, New York, NY 10016-5997, USA

8 June 2005

Print: SH95305
PDF: SS95305

--`,,`,,`-`-`,,`,,`,`,,`---

Copyright The Institute of Electrical and Electronics Engineers, Inc.
Provided by IHS under license with IEEE
No reproduction or networking permitted without license from IHS

Not for Resale

--`,,`,`,-`-`,,`,,`,`,,`---

Copyright The Institute of Electrical and Electronics Engineers, Inc.
Provided by IHS under license with IEEE
No reproduction or networking permitted without license from IHS

Not for Resale

IEEE Guide for Diagnostic Field Testing of Electric Power Apparatus—Electrical Machinery

Sponsor
Electric Machinery Committee
of the
IEEE Instrumentation and Measurement Society

Approved 8 December 2004
IEEE-SA Standards Board

Abstract: This is a guide for determining applicable tests and inspection techniques for various types of large rotating electric machines. It provides short discussions relating to the capabilities and limitations of each test, typical test procedures and in some cases, how to interpret the expected range of results. This is to be a companion document to P62 Part 1-1995.
Keywords: brushless machine, commutator, damper winding, partial discharge, stator core, stator winding, thermocouple

The Institute of Electrical and Electronics Engineers, Inc.
3 Park Avenue, New York, NY 10016-5997, USA

Copyright © 2004 by the Institute of Electrical and Electronics Engineers, Inc.
All rights reserved. Published 8 June 2005. Printed in the United States of America.

IEEE is a registered trademark in the U.S. Patent & Trademark Office, owned by the Institute of Electrical and Electronics Engineers, Incorporated.

National Electric Code and NEC are both registered trademarks of the National Fire Protection Association, Inc.

Print: ISBN 0-7381-4659-5 SH95305
PDF: ISBN 0-7381-4660-9 SS95305

No part of this publication may be reproduced in any form, in an electronic retrieval system or otherwise, without the prior written permission of the publisher.

Copyright The Institute of Electrical and Electronics Engineers, Inc.
Provided by IHS under license with IEEE
No reproduction or networking permitted without license from IHS
Not for Resale

IEEE Standards documents are developed within the IEEE Societies and the Standards Coordinating Committees of the IEEE Standards Association (IEEE-SA) Standards Board. The IEEE develops its standards through a consensus development process, approved by the American National Standards Institute, which brings together volunteers representing varied viewpoints and interests to achieve the final product. Volunteers are not necessarily members of the Institute and serve without compensation. While the IEEE administers the process and establishes rules to promote fairness in the consensus development process, the IEEE does not independently evaluate, test, or verify the accuracy of any of the information contained in its standards.

Use of an IEEE Standard is wholly voluntary. The IEEE disclaims liability for any personal injury, property or other damage, of any nature whatsoever, whether special, indirect, consequential, or compensatory, directly or indirectly resulting from the publication, use of, or reliance upon this, or any other IEEE Standard document.

The IEEE does not warrant or represent the accuracy or content of the material contained herein, and expressly disclaims any express or implied warranty, including any implied warranty of merchantability or fitness for a specific purpose, or that the use of the material contained herein is free from patent infringement. IEEE Standards documents are supplied "**AS IS**."

The existence of an IEEE Standard does not imply that there are no other ways to produce, test, measure, purchase, market, or provide other goods and services related to the scope of the IEEE Standard. Furthermore, the viewpoint expressed at the time a standard is approved and issued is subject to change brought about through developments in the state of the art and comments received from users of the standard. Every IEEE Standard is subjected to review at least every five years for revision or reaffirmation. When a document is more than five years old and has not been reaffirmed, it is reasonable to conclude that its contents, although still of some value, do not wholly reflect the present state of the art. Users are cautioned to check to determine that they have the latest edition of any IEEE Standard.

In publishing and making this document available, the IEEE is not suggesting or rendering professional or other services for, or on behalf of, any person or entity. Nor is the IEEE undertaking to perform any duty owed by any other person or entity to another. Any person utilizing this, and any other IEEE Standards document, should rely upon the advice of a competent professional in determining the exercise of reasonable care in any given circumstances.

Interpretations: Occasionally questions may arise regarding the meaning of portions of standards as they relate to specific applications. When the need for interpretations is brought to the attention of IEEE, the Institute will initiate action to prepare appropriate responses. Since IEEE Standards represent a consensus of concerned interests, it is important to ensure that any interpretation has also received the concurrence of a balance of interests. For this reason, IEEE and the members of its societies and Standards Coordinating Committees are not able to provide an instant response to interpretation requests except in those cases where the matter has previously received formal consideration. At lectures, symposia, seminars, or educational courses, an individual presenting information on IEEE standards shall make it clear that his or her views should be considered the personal views of that individual rather than the formal position, explanation, or interpretation of the IEEE.

Comments for revision of IEEE Standards are welcome from any interested party, regardless of membership affiliation with IEEE. Suggestions for changes in documents should be in the form of a proposed change of text, together with appropriate supporting comments. Comments on standards and requests for interpretations should be addressed to:

Secretary, IEEE-SA Standards Board

445 Hoes Lane

P.O. Box 1331

Piscataway, NJ 08855-1331USA

NOTE—Attention is called to the possibility that implementation of this standard may require use of subject matter covered by patent rights. By publication of this standard, no position is taken with respect to the existence or validity of any patent rights in connection therewith. The IEEE shall not be responsible for identifying patents for which a license may be required by an IEEE standard or for conducting inquiries into the legal validity or scope of those patents that are brought to its attention.

Authorization to photocopy portions of any individual standard for internal or personal use is granted by the Institute of Electrical and Electronics Engineers, Inc., provided that the appropriate fee is paid to Copyright Clearance Center. To arrange for payment of licensing fee, please contact Copyright Clearance Center, Customer Service, 222 Rosewood Drive, Danvers, MA 01923 USA; +1 978 750 8400. Permission to photocopy portions of any individual standard for educational classroom use can also be obtained through the Copyright Clearance Center.

Copyright The Institute of Electrical and Electronics Engineers, Inc.
Provided by IHS under license with IEEE
No reproduction or networking permitted without license from IHS
Not for Resale

Introduction

This introduction is not part of IEEE Std 62.2-2004, IEEE Guide for Diagnostic Field Testing of Electric Power Apparatus—Electrical Machinery.

The condition of power apparatus is of prime importance for the successful operation of a power system. During transportation, installation and service operation, the apparatus may be exposed to conditions which adversely affect its reliability and useful life. One of the principal aims of the maintenance engineer is to detect defects at an early stage and take appropriate corrective measures. The detection is usually achieved by means of diagnostic evaluation in the field which is performed at regular intervals (for example annually or more frequently as necessary). This guide describes most of the off-line diagnostic tests and measurements which are common practice and provides additional information in the case of more specialized procedures. Each test has an interpretation subclause which is provided not to establish a standard but merely to provide a guide to the user. There is not necessarily any direct relationship between these field tests and factory tests. For tests performed within the warranty period, the measurements should agree with the manufacturer's data when performed under similar conditions. When measurements are performed on service-aged equipment, there may be some deviation between field and factory data. Interpretation of measured results is usually based on a comparison with data obtained previously on the same unit or by comparison with similar units. Many of the levels specified in this document are not standardized; however, the values quoted have been found to be practical and are widely used by the industry. The frequency of the tests will vary depending upon the type, size, age and operating history of the unit. It is recommended that the user of the power apparatus establish a maintenance schedule based on these conditions and on original equipment manufacturer (OEM) recommendations. The test results obtained during the periodic checks should be systematically filed in order to provide a diagnostic data base.

This guide was first published in April 1958 as AIEE Std 62, Recommended Guide for Making Dielectric Measurements in the Field. It was revised and republished as IEEE Std 62 - 1978, Guide for Field Testing Power Apparatus Insulation. This present revision contains more detailed descriptions of test procedures than the previous editions and also includes guidance covering visual inspection. It will therefore be published in different parts with each part covering a specific type of power apparatus.

Notice to users

Errata

Errata, if any, for this and all other standards can be accessed at the following URL: http://standards.ieee.org/reading/ieee/updates/errata/index.html. Users are encouraged to check this URL for errata periodically.

Interpretations

Current interpretations can be accessed at the following URL: http://standards.ieee.org/reading/ieee/interp/index.html.

Patents

Attention is called to the possibility that implementation of this standard may require use of subject matter covered by patent rights. By publication of this standard, no position is taken with respect to the existence or validity of any patent rights in connection therewith. The IEEE shall not be responsible for identifying patents or patent applications for which a license may be required to implement an IEEE standard or for conducting inquiries into the legal validity or scope of those patents that are brought to its attention.

Copyright © 2004 IEEE. All rights reserved.

Copyright The Institute of Electrical and Electronics Engineers, Inc.
Provided by IHS under license with IEEE
No reproduction or networking permitted without license from IHS
Not for Resale

Participants

At the time this standard was completed, the working group had the following membership:

Thomas R. Wait, *Chair and Secretary*
Richard H. Hulett, *PCIC Standards Liaison*

William H. Bartley
Elton W. Floyd
Berry R. Huggins
Joseph V. Kisela
James F. Lau
Clyde V. Maughan
William McDermid
Timothy P. Olson
Maurice A. Secrest
Howard G. Sedding
Edward. T. Thomson
David Train
Robert T. Ward

It is fitting that we give special recognition to David Train, who had the foresight and determination to initiate the development of this guide. He was chair of the development of P62.1, dealing with transformers and has made significant contributions to this guide on Electrical Machinery.

Other individuals who have contributed review and comments during the development of this guide are the following:

James S. Edmonds
Geoffrey S. Klempner
Nils E. Nilsson
James A. Oliver
Vicki Warren
James R. Michalec

The following individual members of the balloting committee voted on this standard. Balloters may have voted for approval, disapproval, or abstention.

Vaino Aare
Paul A. Anderson
Roy L. Balke
William H. Bartley
Ray Bartnikas
Kevin D. Becker
Thomas H. Bishop
E.A. Boulter
Vern L. Buchholz
Sudhakar Cherukupalli
Douglas Conley
Stephen P. Conrad
Tommy P. Cooper
Guru Dutt Dhingra
James Dymond
James S. Edmonds
Franklin T. Emery
Robert E. Fenton
Jorge Fernandez-Daher
Elton W. Floyd
Trilok C. Garg
Nirmal Ghai
Brian E. B. Gott
Vince Green
Glenn L. Griffin
Randall C. Groves
Bal K. Gupta
Thomas J. Hammons
Gary A. Heuston
Edward A. Horgan
Alan M. Iversen
Reinhard E. Joho
Innocent Kamwa
Joseph V. Kisela
Geoffrey S. Klempner
Stephen B. Kuznetsov
Thomas E. Laird
Peter H. Landrieu
William E. Larzelere
Kevin Loving
John E. Malinowski
Andrea Mariscotti
Antonio J. Marques-Cardoso
Walter J. Martiny
C. V. Maughan
William R. McCown
William McDermid
Jeffery L. McElray, Sr.
Donald G. McLaren
James R. Michalec
Gary L. Michel
G. Harold Miller
Charles Millet
Rihong Mo
Daleep Mohla
Lon W. Montgomery
Glenn Mottershead
Nils E. Nilsson
Beant S. Nindra
James A. Oliver
Paul J. Pillitteri
Madan Rana
RadhakrishnaV. Rebbapragada
Laurence Rodland
Jesus Martinez Rodriguez
Charles M. Rowe
James A. Ruggieri
Ewald Schweiger
Manoj R. Shah
John Shea
Daniel Slomovitz
Greg C. Stone
Qi Su
James E. Timperley
David Train
Gerald Vaughn
Paul Dieter Wangner
Thomas R. Wait
Robert T. Ward
Vicki Warren
Charles A. Wilson
Karim Younsi
Hugh Zhu

Copyright © 2004 IEEE. All rights reserved.
Copyright The Institute of Electrical and Electronics Engineers, Inc.
Provided by IHS under license with IEEE
No reproduction or networking permitted without license from IHS
Not for Resale

When the IEEE-SA Standards Board approved this standard on 8 December 2004, it had the following membership:

Don Wright, *Chair*
Steve M. Mills, *Vice Chair*
Judith Gorman, *Secretary*

Chuck Adams
H. Stephen Berger
Mark D. Bowman
Joseph A. Bruder
Bob Davis
Roberto de Boisson
Julian Forster*
Arnold M. Greenspan
Mark S. Halpin
Raymond Hapeman
Richard J. Holleman
Richard H. Hulett
Lowell G. Johnson
Joseph L. Koepfinger*
Hermann Koch
Thomas J. McGean
Daleep C. Mohla
Paul Nikolich
T. W. Olsen
Ronald C. Petersen
Gary S. Robinson
Frank Stone
Malcolm V. Thaden
Doug Topping
Joe D. Watson

*Member Emeritus

Also included are the following nonvoting IEEE-SA Standards Board liaisons:

Satish K. Aggarwal, *NRC Representative*
Richard DeBlasio, *DOE Representative*
Alan Cookson, *NIST Representative*

Michael D. Fisher
IEEE Standards Project Editor

Copyright © 2004 IEEE. All rights reserved.

Copyright The Institute of Electrical and Electronics Engineers, Inc.
Provided by IHS under license with IEEE
No reproduction or networking permitted without license from IHS
Not for Resale

Contents

1. Overview 1

1.1 Scope 1
1.2 Purpose 2

2. Normative references 2

3. Definitions 3

4. Diagnostic charts 4

5. Safety 7

5.1 General 7
5.2 Personnel considerations 7

6. Guide to maintenance inspections 9

6.1 General 9
6.2 Related documents 10
6.3 Accessibility 10
6.4 Inspection procedures 10
6.5 Reporting 11
6.6 Evaluation 11
6.7 Frequency of inspection 11

7. Inspection and test techniques—AC machine stators 11

7.1 Stator winding 11
7.2 Stator core 48
7.3 Stator coolant passage 58

8. Inspection and test techniques—AC machine rotors 64

8.1 Rotor winding 64
8.2 Rotor mechanical components 71
8.3 Rotor damper winding 80

9. Inspection and test techniques—AC machine assembly 82

9.1 General 82
9.2 Bearings 87
9.3 Brush rigging—inspection and test 89

10. Inspection and test techniques—DC and brushless rotating machine stators 90

10.1 Field windings 90
10.2 Field winding connections 90

11. Inspection and test techniques—DC and brushless rotating machine rotor 91

Copyright © 2005 IEEE. All rights reserved.

Copyright The Institute of Electrical and Electronics Engineers, Inc.
Provided by IHS under license with IEEE
No reproduction or networking permitted without license from IHS

Not for Resale

11.1 Rotor armature windings 91
11.2 Rotor diode wheel 92
11.3 Rotor commutator 96

12. Inspection and test techniques—DC and brushless rotating machines assembly 97

12.1 Assembly-brush rigging 97
12.2 Assembly-bearing 99

13. Inspection and test techniques—permanent magnet generators 99

13.1 Permanent magnet generator stators 99
13.2 Permanent magnet generator rotor 100

Copyright © 2005 IEEE. All rights reserved.

Copyright The Institute of Electrical and Electronics Engineers, Inc.
Provided by IHS under license with IEEE
No reproduction or networking permitted without license from IHS
Not for Resale

Copyright The Institute of Electrical and Electronics Engineers, Inc.
Provided by IHS under license with IEEE
No reproduction or networking permitted without license from IHS

Not for Resale

IEEE Guide for Diagnostic Field Testing of Electric Power Apparatus —Electrical Machinery

1. Overview

Throughout this guide the term “machine” has been used when the subject matter pertains to both generators and motors. Many of the diagnostic tests are also appropriate for motors, exciters and synchronous condensers. The diagnostic charts in clause 4 should be consulted. The diagnostic charts identify the subsystems and how the diagnostic tests apply to the various types of rotating equipment. For each procedure there is a description of how it relates to evaluating the condition of the listed pieces of equipment.

Interpretive discussions are also included in several areas to provide additional insight on the particular test, or to provide guidance on acceptance criteria. These discussions are based on the authors’ judgment of accepted practice. It should be noted that sometimes the results of several types of tests need to be interpreted together to diagnose a problem. Acceptance criteria provided by the original equipment manufacturer should also be consulted, as they may take precedence over the criteria in this document.

It should also be noted that the terms “bar” and “coil” are used throughout the guide, but are not interchangeable. A bar is usually considered to be half of a coil, and is most often applied to single-turn coils.

1.1 Scope

This guide describes off-line inspections and diagnostic tests which are performed in the field on rotating electrical equipment with voltage ratings of 4000 V or greater. The guide is intended to address large industrial and utility sized machinery. These evaluation procedures, which are in common use on large rotating machines, have been found prudent in assuring high equipment reliability at low overall maintenance cost. The procedures are presented in categories depending on the subsystem of the machine being examined.

Copyright © 2005 IEEE. All rights reserved.

Copyright The Institute of Electrical and Electronics Engineers, Inc.
Provided by IHS under license with IEEE
No reproduction or networking permitted without license from IHS
Not for Resale

1.2 Purpose

This guide is intended to assist maintenance personnel in determining what diagnostic tests should be planned for their rotating electrical machines, what should be expected of the tests, and in general, how to perform the tests. This guide brings together, into one document, many commonly-performed appropriate tests for electrical machines, and references other individual standards so more detailed information may be obtained.

2. Normative references

The following referenced documents are indispensable for the application of this document. For dated references, only the edition cited applies. For undated references, the latest edition of the referenced document (including any amendments or corrigenda) applies.

ANSI/EIA-282-A, Standard for Silicon Rectifier Diodes.[1]

ANSI C50.10-1990, American National Standard for Rotating Electrical Machinery—Synchronous Machines. (Presently being replaced by C50-12 and C50-13).

ASTM D 1868-81, Standard Test Method for Detections and Measurement of Partial Discharge (Corona) Pulses in Evaluation of Insulation Systems.[2]

ASTM F855-97e1, Standard Specifications for Temporary Protective Grounds to Be Used on De-energized Electric Power Lines and Equipment.

IEC 60894, Guide for Test Procedures for the Measurement of Loss Tangent on Coils and Bars for Machine Windings.[3]

IEEE Std 4™-1995, IEEE Standard Techniques for High Voltage Testing (ANSI).[4,5]

IEEE Std 43™-2000, IEEE Recommended Practice for Testing Insulation Resistance of Rotating Machinery (ANSI).

IEEE Std 56™-1977 (Reaff 1991), IEEE Guide for Insulation Maintenance of Large AC Rotating Machinery (10 000 KVA and Larger), (ANSI).

[1]ANSI publications are available from the Sales Department, American National Standards Institute, 25 West 43rd Street, 4th Floor, New York, NY 10036, USA (http://www.ansi.org/).

[2]ASTM publications are available from the American Society for Testing and Materials, 100 Barr Harbor Drive, West Conshohocken, PA 19428-2959, USA (http://www.astm.org/).

[3]IEC publications are available from the Sales Department of the International Electrotechnical Commission, Case Postale 131, 3, rue de Varembé, CH-1211, Genève 20, Switzerland/Suisse (http://www.iec.ch/). IEC publications are also available in the United States from the Sales Department, American National Standards Institute, 25 West 43rd Street, 4th Floor, New York, NY 10036, USA (http://www.ansi.org/).

[4]The IEEE standards or products referred to in this clause are trademarks of the Institute of Electrical and Electronics Engineers, Inc.

[5]IEEE publications are available from the Institute of Electrical and Electronics Engineers, Inc., 445 Hoes Lane, Piscataway, NJ 08854, USA (http://standards.ieee.org/).

Copyright © 2005 IEEE. All rights reserved.
Copyright The Institute of Electrical and Electronics Engineers, Inc.
Provided by IHS under license with IEEE
No reproduction or networking permitted without license from IHS
Not for Resale

IEEE Std 67™-1990, IEEE Guide for Operation and Maintenance of Turbine Generators (ANSI).

IEEE Std 95™-2002, Recommended Practice for Insulation Testing of Large AC Rotating Machinery with High Direct-Voltage.

IEEE Std 112™-1996, IEEE Standard Test Procedure for Polyphase Induction Motors and Generators (ANSI).

IEEE Std 115™-2002, IEEE Guide: Test Procedures for Synchronous Machines Part I-Acceptance and Performance Testing Part II-Test Procedures and Parameter Determination for Dynamic Analysis.

IEEE Std 118™-1978, (Reaff 1992) IEEE Standard Test Code for Resistance Measurements.

IEEE Std 286™-2000, IEEE Recommended Practice for the Measurement of Power Factor Tip-Up of Electric Machinery Stator Coil Insulation.

IEEE Std 393™-1991, (Reaff 1998) IEEE Standard for Test Procedures for Magnetic Cores.

IEEE Std 433™-1974, (Reaff 1991)(Presently under revision), IEEE Recommended Practice for Insulation Testing of Large AC Rotating Machinery with High Voltage at Very Low Frequency.

IEEE Std 492™-1999, IEEE Guide for Operation and Maintenance of Hydro-Generators.

IEEE Std 510™-1983, (Reaff 1992) IEEE Recommended Practices for Safety in High-Voltage and High Power Testing.

IEEE Std 522™-1992 (Reaff 1998) IEEE Guide for Testing Turn-to-Turn Insulation on Form-Wound Stator Coils for Alternating-Current Rotating Electric Machines.

IEEE Std 1434™-2000 IEEE Guide to the Measurement of Partial Discharges in Rotating Machinery.

3. Definitions

For the purposes of this document, the following terms and definitions apply. *The Authoritative Dictionary of IEEE Standards Terms* should be referenced for terms not defined in this clause.

3.1 apparent charge (terminal charge): That charge that, if it could be injected instantaneously between the terminals of the test object, would momentarily change the voltage between its terminals by the same amount as the partial discharge itself. The apparent charge should not be confused with the charge transferred across the discharging cavity in the dielectric medium. Apparent charge within the terms of this document, is expressed in coulombs, abbreviated C. One picocoulomb (pC) is equal to 10-12 coulombs.

Copyright © 2005 IEEE. All rights reserved.

Copyright The Institute of Electrical and Electronics Engineers, Inc.
Provided by IHS under license with IEEE
No reproduction or networking permitted without license from IHS
Not for Resale

3.2 diagnostic field tests and measurements (power apparatus): Procedures which are performed on site on the complete apparatus or parts thereof in order to determine its suitability for service.

NOTE—The parameters measured differ from apparatus to apparatus and may include electrical, mechanical, chemical, thermal, environmental, etc., quantities. Interpretation of the results is usually based on a change in the measured characteristics and/or by comparison with pre-established criteria. The tests are normally carried out at regular intervals based on users experience and or manufacturers recommendations. These tests may also be performed on defective apparatus in order to determine the location and/or cause of failure.[6]

3.3 dissipation factor (dielectric): The cotangent of the phase angle between a sinusoidal voltage applied across a dielectric or combinations of dielectrics, and the resulting current through the dielectric system.

3.4 partial discharge (PD): Electric discharge that only partially bridges the insulation between conductors

3.5 power factor (dielectric): The cosine of the phase angle between a sinusoidal voltage applied across a dielectric or combinations of dielectrics and the resulting current through the dielectric system.

3.6 OEM: Original Equipment Manufacturer

3.7 coil: A unit of a winding consisting of one or more insulated conductors connected in series and surrounded by common insulation, and arranged to link or produce magnetic flux.

3.8 bar: Usually considered to be half of a coil and is most often applied to single-turn coils.

4. Diagnostic charts

The diagnostic charts contained in this clause are intended to provide the user with a means of identifying applicable diagnostic procedures for each type of rotating machinery based on the machinery subsystems. Where there is a blank box located at the intersection of a given machinery type and a given procedure, that procedure is not applicable to the subsystem of that particular piece of machinery. For those procedures which do apply to a listed machine type and subsystem, a reference to the appropriate clause is shown.

Not all the tests are necessarily performed by any single user. In addition, the specific tests carried out vary according to the regular practice of the user and may depend on the history of the apparatus.

The establishment of benchmark values on a new piece of electrical equipment is very important when considering evaluation of future test results. Benchmark values are the first measurements taken on a piece of equipment, new or used. Subsequent test results, when compared to these initial values and similar tests on similar equipment, may indicate a trend.

[6]Notes in text, tables, and figures are given for information only, and do not contain requirements needed to implement the standard.

Copyright © 2005 IEEE. All rights reserved.
Copyright The Institute of Electrical and Electronics Engineers, Inc.
Provided by IHS under license with IEEE
No reproduction or networking permitted without license from IHS Not for Resale

DIAGNOSTIC CHART
AC Rotating Machinery

A = Synchronous - Cylindrical Rotor
B = Synchronous – Salient Pole Rotor
C = Induction - Squirrel Cage
D= Induction – Wound Rotor
* = Commonly Not Applicable

			A	B	C	D
Stator	Winding	Visual Inspection	7.1.1	7.1.1	7.1.1	7.1.1
		Wedge Tightness	7.1.2	7.1.2	7.1.2	7.1.2
		Winding Insulation Resistance	7.1.3	7.1.3	7.1.3	7.1.3
		Controlled Direct Overvoltage Tests	7.1.4	7.1.4	7.1.4	7.1.4
		Overvoltage Proof Test (AC, DC, 0.1 Hertz)	7.1.5	7.1.5	7.1.5	7.1.5
		Dissipation Factor and Tip-Up	7.1.6	7.1.6	7.1.6	7.1.6
		Turn to Turn	7.1.7*	7.1.7	7.1.7	7.1.7
		Partial Discharge	7.1.8	7.1.8	7.1.8	7.1.8
		Corona Probe Test	7.1.9	7.1.9	7.1.9	7.1.9
		Winding Conductor Resistance	7.1.10	7.1.10	7.1.10	7.1.10
		Detector (RTD/TC) Insulation Test	7.1.11	7.1.11	7.1.11	7.1.11
		Detector (RTD/TC) Continuity/Calibration	7.1.12	7.1.12	7.1.12	7.1.12
		Tube to Tube Insulation	7.1.13	-	-	-
		Tube to Copper Insulation	7.1.14	-	-	-
		Group Transpositions	7.1.15	7.1.15*	7.1.15*	7.1.15*
		Modal Analysis (Bump Test)	7.1.16	7.1.16*	7.1.16*	7.1.16*
		Bushing/Dielectric Loss	7.1.17	-	-	-
	Core	Visual Inspection	7.2.1	7.2.1	7.2.1	7.2.1
		Low Energy Core Test	7.2.2	7.2.2*	7.2.2	7.2.2
		High Energy Core Test	7.2.3	7.2.3	7.2.3	7.2.3
		Core Tightness	7.2.4	7.2.4	7.2.4	7.2.4
		Through Bolt Insulation Resistance	7.2.5	-	-	-
		Flux Shield Insulation Resistance	7.2.6	-	-	-
	Coolant Passage	Visual Inspection	7.3.1	7.3.1	7.3.1	7.3.1
		Gas Cooling Passage Pressure Drop and Flow	7.3.2	-	-	-
		Water Cooling Passage Leak and Flow Tests	7.3.3	7.3.3	-	-
		Water Flow Verification	7.3.4	7.7.4	-	-
Rotor	Winding	Visual Inspection	8.1.1	8.1.1	8.1.1	8.1.1
		Conductor Resistance	8.1.2	8.1.2	-	8.1.2
		Salient Pole Interconnection Test	-	8.1.3	-	-
		Groundwall Insulation Resistance	8.1.4	8.1.4	-	8.1.4
		Locating Winding Grounds	8.1.5	8.1.5	-	8.1.5
		Turn Insulation Testing (Pole Drop & Impedance)	8.1.6	8.1.6	-	-
		Turn Short Location (Turn Drop)	8.1.7	8.1.7	-	-
	Mechanical Components	Visual Inspection	8.2.1	8.2.1	8.2.1	8.2.1
		Ultrasonic	8.2.2	8.2.2*	8.2.2*	8.2.2*
		Eddy Current	8.2.3	-	8.2.3*	8.2.3*
		Dye Penetrant	8.2.4	8.2.4	8.2.4	8.2.4
		Bore Leak Test	8.2.5	-	-	-
	Damper	Visual Inspection	-	8.3.1	8.3.1	-
		Winding Integrity	-	8.3.2	8.3.2	-
Assembly	General	Visual Inspection	9.1.1	9.1.1	9.1.1	9.1.1
		Air Gap Measurement Visual	9.1.2	9.1.2	9.1.2	9.1.2
		Cooler Leak Test	9.1.3	9.1.3	9.1.3*	9.1.3*
		Air Leak Test	9.1.4	-	-	-
	Bearing	Visual Inspection	9.2.1	9.2.1	9.2.1	9.2.1
		Bearing Insulation	9.2.2	9.2.2	9.2.2	9.2.2
		Bearing Mechanical	9.2.3	9.2.3	9.2.3	9.2.3
	Brush Rigging	Visual Inspection	9.3.1	9.3.1	-	9.3.1
		Brush Rigging Insulation	9.3.2	9.3.2	-	9.3.2
		Brush Rigging Mechanical	9.3.3	9.3.3	-	9.3.3

Copyright © 2005 IEEE. All rights reserved.

Copyright The Institute of Electrical and Electronics Engineers, Inc.
Provided by IHS under license with IEEE
No reproduction or networking permitted without license from IHS
Not for Resale

DIAGNOSTIC CHART
DC and Brushless Rotating Machines

1E = DC Exciters Machines
F = Brushless Machines

			E	F
Stator	Field Windings	Visual Inspection	10.1.1	10.1.1
		Conductor Resistance	10.1.2	10.1.2
		Insulation Resistance	10.1.3	10.1.3
		Turn Insulation Testing (Pole Drop)	10.1.4	10.1.4
	Winding Connections	Visual Inspection	10.2.1	10.2.1
		Resistance	10.2.2	10.2.2
Rotor	Armature Windings	Visual Inspection	11.1.1	11.1.1
		Conductor Resistance	11.1.2	11.1.2
		Insulation Resistance	11.1.3	11.1.3
	Diode Wheel	Visual Inspection	--	11.2.1
		Insulation Resistance	-	11.2.2
		Fuse Resistance	-	11.2.3
		Contact Resistance	-	11.2.4
		Diode Integrity Check	-	11.2.5
		Capacitor	-	11.2.6
	Commutator	Visual Inspection	11.3.1	-
		Run Out Measurement	11.3.2	-
Assembly	Brush Rigging	Visual Inspection	12.1.1	-
		Physical Spacing	12.1.2	-
		Insulation Resistance	12.1.3	-
		Kick Neutral	12.1.4	-
	Bearing	Visual	12.2.1	12.2.1
		Insulation Resistance	12.2.2	12.2.2

DIAGNOSTIC CHART
Permanent Magnet Generators

G = Permanent Magnet Generator

			G
Permanent Magnet Generator	Stator	Visual Inspection	13.1.1
		Conductor Resistance	13.1.2
		Winding Insulation Resistance	13.1.3
	Rotor	Visual Inspection	13.2

Copyright © 2005 IEEE. All rights reserved.
Copyright The Institute of Electrical and Electronics Engineers, Inc.
Provided by IHS under license with IEEE
No reproduction or networking permitted without license from IHS
Not for Resale

5. Safety

5.1 General

Personnel safety is of paramount importance. In addition, considerations of safety in electrical testing apply to the test equipment and apparatus under test. The following guidelines cover many of the fundamentally important procedures which have been found to be practical. However, it is not possible to cover all aspects in this document and the test personnel should also consult IEEE Std 510-1983[7], ASTM F855-97, manufacturers' instruction manuals, union, company or government regulations.

Prior to performing any test of power apparatus, there should be a meeting of all people who will be involved or affected by the test. The test procedure should be discussed so there is a clear understanding of all aspects of the work to be performed. Particular emphasis should be placed on personnel hazards and the safety precautions associated with these hazards. In addition, procedures and precautions should be discussed which will assure the production of meaningful test results without subjecting the test specimen to unnecessary risks. In those situations where the tests are not being conducted by owner personnel, concurrence of the owner should be obtained on test magnitudes before the tests are performed. Responsibilities for the various duties involved in performing the test should be assigned.

5.2 Personnel considerations

5.2.1 Responsibility (qualifications)

Personnel assigned to performing the procedures described in this document should be well trained for the particular task to be performed. In particular, they should be aware of the safety hazards that may be created if proper procedures are not followed. Many of the test evaluations call for a high degree of judgment on the part of the evaluator and that can only be obtained by experience. Experience on one type of machine does not necessarily qualify a person to conduct and evaluate tests on another type of machine.

It is the responsibility of the tester to ensure the safety of all personnel including plant personnel and those directly working on the test. The tester should also consider the safety of the apparatus being tested and the test equipment.

5.2.2 Hazards

Insulation tests in the field present a hazard to personnel unless suitable precautions are taken. Apparatus or circuits to be tested shall be disconnected from the power system. Typical safety procedures call for a visual check of the disconnection or, when this is not possible, a check with a voltage indicator. Solid grounds are then applied. Personnel should be instructed to treat all ungrounded apparatus as energized.

5.2.3 Ground connection

Use of working grounds should comply with established company guidelines. For further information see ASTM F 855-97. The test equipment, as well as windings, nearby components, and associated equipment not under test, should be solidly grounded for the duration of the test, and after the test if dc is used.

5.2.4 Precautions

When testing, precautions shall be taken, including warning signs and barriers as listed in 5.2.5, to prevent any personnel from contacting energized circuits. An observer should be stationed to warn approaching

[7]Information on references can be found in Clause 2.

Copyright © 2005 IEEE. All rights reserved.

Copyright The Institute of Electrical and Electronics Engineers, Inc.
Provided by IHS under license with IEEE
No reproduction or networking permitted without license from IHS
Not for Resale

personnel and may be supplied with means to de-energize the circuit. The means may include a switch to shut off the power source and ground the circuit until all stored charges are dissipated.

5.2.5 Warning signs and barriers

The test area shall be marked off with signs and easily visible tape. Warning signs shall conform to the requirements of governing bodies such as the Occupational Safety and Health Administration (OSHA) in the United States.

5.2.6 Hazardous materials

On some rotating machines hazardous materials such as asbestos and lead carbonate may be present. In such cases, work, cleaning, and disposal of hazardous materials shall be performed according to appropriate government regulations.

5.2.7 Machine rotation

Some test procedures are performed with the machine rotating slowly and with cover plates, guards, and end-shields removed. Hydro machines may be operated for test purposes with covers removed at rated speed or at runaway speed. These tests present mechanical hazards in addition to electrical ones. Appropriate procedures should therefore be developed to prevent injury to personnel present.

5.2.8 Documentation

It is recommended that the following documentation be available before commencing any diagnostic tests:

- nameplate data of machine
- relevant standards
- written test procedure
- machine instruction manual
- instruction manual for test equipment
- manufacturer's information indicating expected test values
- previous inspection and test results (if available)
- operational and maintenance history

5.3 Equipment considerations

5.3.1 Consequences of failure

Some type of tests, particularly overvoltage, may result in failure of deteriorated insulation which otherwise might have operated safely for an additional period of time. Failure can substantially expand the magnitude and length of the outage.

5.3.2 Overvoltage

To prevent an unintended overvoltage, a sphere gap, adjusted to spark over at a voltage slightly above the desired maximum, should be connected across the voltage source, (e.g. IEEE Std 4-1995). By selecting the proper value of series resistor, the gap may be used to provide a warning signal, to inhibit further rise in the test voltage, or to activate an overcurrent circuit breaker in the power supply circuit.

Copyright © 2005 IEEE. All rights reserved.
Copyright The Institute of Electrical and Electronics Engineers, Inc.
Provided by IHS under license with IEEE
No reproduction or networking permitted without license from IHS Not for Resale

5.3.3 Surge arresters

If the test voltage is expected to approach or exceed the maximum continuous voltage of any equipment mounted metal-oxide surge arrestors, or the duty-cycle voltage rating of any equipment mounted silicon-carbide surge arresters, then they should be disconnected before energizing the windings in order to avoid arrester damage and limitation of the test voltage due to arrester operation. It may be necessary to disconnect surge arresters even when using lower test voltages in order to obtain meaningful insulation resistance measurements.

6. Guide to maintenance inspections

Of all evaluation techniques used to determine the condition of rotating electrical machinery, none is more revealing than a thorough visual inspection performed by knowledgeable maintenance personnel. Physical inspection in conjunction with various applicable tests described in this document will make the best possible determination of the condition of the rotating machinery.

6.1 General

This guide will provide basic techniques and methods for making inspections of all categories of rotating electrical machinery. Depending on the machine being inspected, various levels of accessibility can be provided. This is determined by the design of the machine and the degree of disassembly allowed for the inspection. In general, the greater the degree of disassembly, the more accurate the inspection results. Still, interim crawl through inspections can be of great value between major disassembles.

Every inspection should begin with a consultation with the operating personnel to discuss their operating experience prior to the current machine outage. Any unusual operating experiences or conditions reported may indicate the need to focus particular attention to a specific area of the machine. They may also indicate the need for special tests not ordinarily applied during maintenance inspection. Unusual operating conditions may include excitation disturbances, excessive vibration or noise, synchronizing out-of-phase, generator motoring, voltage or power surges, overloads, loss of cooling water, temperature abnormalities, or hydrogen leakage. (Hydrogen leakage refers to leakage from the machine or, in the case of liquid cooled stator windings, into the stator cooling system.) Previous inspection reports and operating records should be consulted.

Inspection check lists are helpful to itemize equipment components that require specific attention. Inspection of a component often involves only a visual check for evidence of overheating, mechanical damage, dusting, fretting, corrosion, proper peening or locking of hardware, etc. In some cases, the visual inspection should be accompanied by nondestructive examinations and other mechanical checks.

It is imperative that the visual inspection occur prior to the cleaning of any machine components. An exception would be if a hazardous material, such as lead carbonate, is present; it should be properly removed before inspecting. Many signs of deterioration could be missed if the machine is cleaned before inspection.

In many cases, it is advisable to solicit the manufacturer’s assistance in planning for and executing inspection and test programs.

Before beginning the inspection of a machine, necessary tools and equipment should be available. Minimum tools required would include: small and large mirrors, lights, small hammer, borescopes, small magnet, and video, digital or 35 mm camera. Additional tools which may be needed include flexible borescope and robotic devices with accessories.

Copyright © 2005 IEEE. All rights reserved.

Copyright The Institute of Electrical and Electronics Engineers, Inc.
Provided by IHS under license with IEEE
No reproduction or networking permitted without license from IHS
Not for Resale

Typically, the evidence of looseness and vibration produces visual deposits in the form of dust or a grease-like substance. The components can be tightly adhering at one interface of the structure and still show indications of a broken bond surface at another interface. This may indicate relative motion at this interface. If the component remains affixed at its other interfaces, wear generally does not progress to an extreme situation. However, if a component becomes “hand loose”, the wear into insulation may become extreme.

Tapping components with a small hammer is effective in determining tightness. A feel of relative motion when tapped or non-solid sounds are indicators of looseness. The skilled inspector can discern qualitatively a tight component from a loose one.

6.2 Related documents

In designing a test and inspection program for specific machines or classes of machines, reference should be made to the manufacturer's machine-specific recommendations and general technical information letters, maintenance history of the specific machine and similar machines in service with other users. In addition, the operating duty, maloperation, and application of the specific unit should be taken into consideration, such as: load cycling, number of start-stop cycles, output demands, high cooling medium temperatures, closed versus open ventilation, instrumentation, overload, over temperature, asynchronous operation, synchronizing difficulties, overspeed, cooling water leaks, oil leaks, hydrogen leakage rate and location, contamination history, flux probe data, field ground detection, vibration history and test history.

6.3 Accessibility

The machine should be disassembled in order to make as complete an inspection as possible. However, with the use of robotic devices and/or with video equipment, it should be possible to make visual inspections in partially disassembled equipment. Some mechanical tests can also be performed with these robotic devices. Interim crawl through inspections can be of great value between major disassemblies when specific components of the machine are thought to be in questionable condition. It should be understood that such a crawl through inspection will not provide access to some of the most critical and vulnerable parts of a machine. A crawl through inspection is a valuable process when used as a final inspection for foreign material and tools left in a machine just prior to closing the machine.

Accessibility not only determines the extent of an inspection, it determines whether a machine is considered a confined space. Confined spaces may require atmospheric tests, breathing apparatus, and an observer. Entry into a confined space will be governed by local, state or federal regulations. Regardless of the degree of machine disassembly, an atmospheric test for the presents of normal oxygen levels needs to be performed. Both heavy and light gasses may have occupied the machine before disassembly and quantities of these gasses may be trapped in the lower and upper cavities of the machine frame. Once such tests have been performed, the confined space rules relate to the degree of disassembly. In most cases, when the field is removed from a cylindrical rotor machine and both ends of the machine are left open, it is no longer considered a confined space.

6.4 Inspection procedures

A thorough inspection will include comprehensive visual evaluation, touching, and smelling, accompanied by electrical and mechanical tests. The inspection procedures vary with components, but should focus on detecting and evaluating tightness, motion, wear, discoloration, deposit, amount and type of contamination, displacement, migration, distortion, puffing, softening, cracking, and any other possible abnormalities. Any abnormal condition discovered during an inspection should be compared to previous inspection reports. If change has occurred, perform a comprehensive examination (including appropriate tests) of components that may have been affected by the observed condition or that may have contributed to the condition. Detailed inspection procedures for each system are outlined in its subclause.

Copyright © 2005 IEEE. All rights reserved.
Copyright The Institute of Electrical and Electronics Engineers, Inc.
Provided by IHS under license with IEEE
No reproduction or networking permitted without license from IHS
Not for Resale

6.5 Reporting

The inspection results should be reported in such a manner that at future inspections previously identified problems and concerns can be reviewed and reevaluated in relation to present results and recommendations. Early corrective action is essential in elimination of major problems. Cleaning and re-painting is a good means of eliminating the old progressions so that the future inspections will be confined to the new evidence, but good records should be kept in order to prevent loss of important maintenance information.

6.6 Evaluation

A proper evaluation of inspection results includes more than just a report of findings. It should put these findings in a discussion related to fitness for the intended future service and maintenance of the equipment.

6.7 Frequency of inspection

Inspection frequency should be determined for each specific unit based upon a number of criteria. Some of these include:

- the mode of operation
- the operating history (including system faults and observations of operating parameters out of the ordinary range)
- operating history of the class of machine
- machine size including the ability to make complete crawl-through inspections
- the future expected service of the machine
- significance of the machine in the system

Inspections historically have been made on a three to five year basis with some variations, including rotor-in and rotor-out inspections at alternating intervals. Recent trends are longer intervals which are chosen based on equipment condition, economics, projected plant life, and risk analyses.

7. Inspection and test techniques—AC machine stators

This clause covers tests used in evaluating the condition and serviceability of rotating electrical machinery. There may be tests used on a very selective basis which are not included in this clause, but most tests in general use are included.

The stator is the major stationary element of a rotating machine, and includes the frame (assembly), core, and windings.

Windings and circuits not under test which are internal to the machine or closely associated with it should be both shorted and grounded during testing and inspection. At a minimum, this includes stator windings, field windings, internal excitation coils, RTDs, thermocouples, arrestors and internal monitor circuits. External to the machine, the CTs should be shorted and grounded and the PTs isolated and grounded. Power leads/ isophase bus should be disconnected and solidly grounded.

7.1 Stator winding

The winding being considered in this subclause is the stator winding existing between the neutral leads/ bushings and the main leads/bushings of the machine stator.

Copyright © 2005 IEEE. All rights reserved.

Copyright The Institute of Electrical and Electronics Engineers, Inc.
Provided by IHS under license with IEEE
No reproduction or networking permitted without license from IHS
Not for Resale

7.1.1 Stator winding visual inspection

7.1.1.1 Discussion

Normal operating electromagnetic forces on the slot portion of a stator bar are high. On larger machines these forces are typically of the order of 5 to 25 times the combined top and bottom bar weights. Thus if the bar restraint systems are not fully functioning, vibration will occur. This movement can cause bar groundwall insulation to be damaged by impact or by abrasive wear. Detecting evidence of this vibration may be difficult, if the vibration is small and still in its early stages. If vibration is occurring, dust will be generated as the insulation components wear. On a clean dry machine, the dust deposits will normally be thin but easily detectable. If the machine is contaminated by oil, the dust and oil will combine to form a heavy “grease”, which is often a darker, near-black color. In either case, exact location of the wear source may be difficult to determine, and magnitude of wear difficult to assess. If bar slot vibration is suspected, it is particularly important to consider doing an overvoltage test of the winding.

7.1.1.2 Slot portion

Bar slot vibration: Inspect for dust or grease-like accumulation on the wedges and core iron. With borescope or small light, view accessible ventilation passages of the core for buildup of wear products.

Bar slot discharge: If the semi-conductive slot coating materials are not adequate, or if bars are free to vibrate in the slot, severe degradation of the groundwall insulation, slot wedges, and slot fillers can occur. Careful inspection of the bars through the ventilation ducts may allow detection of wear and wear products.

Wedge and filler vibration and movement: Individual loose wedges will vibrate due to core deflection which results from the magnetic forces caused by the field flux. This core deflection (vibration peak to peak) is typically in the range of 50 to 80 micrometers (several mils) in magnitude. Bar vibration, if occurring, will also cause wedge vibration and may cause filler migration. Because the dust generation from vibrating wedges and vibrating bars may be similar in nature, distinguishing between bar vibration and wedge vibration may not be easily accomplished. Isolated vibrating wedges are ordinarily not a cause for concern as long as they are not end wedges. Vibration can usually be stopped by painting the wedge dovetails. Bar vibration is always a serious cause for concern and generally should be corrected by rewedging or other means. Migrating filler may reach into the end winding and cut into bar groundwall insulation, thus this condition should be detected and corrected.

Checklist For Slot Portion Of Stator Winding

- — Evidence of corona (partial discharge)
- — Degree of cleanliness, including dust generation from vibrating armature bars
- — Evidence of outward migration of slot side filler, filler from under wedges or filler between top and bottom coil sides
- — Blockage of ventilating passages due to axial wedge movement (on units with cut-back or air flow type slot wedges.)
- — Looseness of slot wedges as evidenced by dusting, axial movement, vibration when tapped, or mechanical measurements
- — Mechanical damage to coil insulation, such as from coil vibration, foreign objects, short circuit forces, starved cooling circuit, or loose blocking
- — Tape separation or softness in stator groundwall insulation under end wedge (if significant tape migration is found close to core in end winding)
- — Charring or overheating evidence on wedges, slot fillers, or coil surfaces which might be associated with iron overheating or slot discharge
- — Evidence of air gap baffle distress
- — Winding over-temperature as evidenced by puffed bars or flowed asphalt or fillers

--`,,`,`,-`-`,,`,,`,`,,`---
Copyright © 2005 IEEE. All rights reserved.
Copyright The Institute of Electrical and Electronics Engineers, Inc.
Provided by IHS under license with IEEE
No reproduction or networking permitted without license from IHS
Not for Resale

7.1.1.3 Stator bar insulation tape migration

Many large asphalt windings and a few thermoset windings have experienced this problem, usually on the top bars and at the collector end of the winding. The classic manifestation of tape migration is the “girth crack”, or separation of the surface layer of tape at the end of the slot. Two information sources relate to amount of damage done to a specific bar:

a) Total amount of tape migration, and

b) Physical appearance of the bar in the area of the separation

The separations occur in the area from about 100 mm (4 in) inside the core to 300 mm (12 in) beyond the end of the core, but most commonly in the 150 mm (6 in) area of the bar just beyond the core. If separations are suspected inside the core, the end wedges may be removed.

7.1.1.4 Stator end winding assembly

End windings and connection rings: While the electromagnetic forces on these components are less than on the bars in the slot, the tie and support systems are also less effective. Also, the end windings are the most vulnerable location for foreign material entrapment and damage. In addition, electrical gradients on the individual bars at the ends of the slot, and gradients at the phase breaks, may result in corona activity. If vibration is occurring between the various components, dust or grease will be generated similar to that described under slot inspection. Inspection should be thorough and observed deterioration may be serious or minor, depending on the specific conditions observed.

Electrical connections are usually covered by insulation; therefore, problems may be difficult to detect by inspection unless in advanced stages. Common forms of deterioration are cracking of components or increase in contact resistance. Deterioration is usually manifested by discoloration and/or dust generation.

Checklist For End Winding Portion Of Stator Winding

— Cleanliness, looking for accumulation of atmospheric dust, foreign objects, or evidence of oil contamination

— Evidence of dusting, erosion or cutting due to movement and vibration of bracing components, bar vibration, and loose blocking

— Evidence of frayed, displaced or broken lashings or banding

— Evidence of softness or insulation disturbance in connection taping

— Evidence of loose hardware

— Evidence of coil, bracing, or circuit ring distortion due to differential thermal expansion or faults. Minor evidence may consist of paint cracks at mating surfaces between winding and bracing components.

— Evidence of overheating at the overlap of the stress control coating and semiconductive slot coating

— Evidence of partial discharge activity as displayed by tightly adhering deposits on winding surfaces between phase coils near coil crossovers, and between connections in areas where voltage differences (in operation) are high. Deposits vary from a white-gray color in air-cooled machines to red, brown and black in hydrogen cooled machines.

— Tape separation in coil groundwall insulation for several centimeters outward from the end of the core. If significant tape separation evidence is noted, all end wedges should be removed to permit an inspection of coil surfaces near the ends of each stator slot.

— Breakage of bonds between connection components in windings with bare connections. Evidence of solder/braze joint overheating, broken strands, or dusting.

— Evidence of overheating or mechanical damage

Copyright © 2005 IEEE. All rights reserved.

Copyright The Institute of Electrical and Electronics Engineers, Inc.
Provided by IHS under license with IEEE
No reproduction or networking permitted without license from IHS
Not for Resale

— Evidence of water leakage in liquid cooled machines. No visual evidence does not necessarily mean that no leaks exist.

7.1.2 Stator slot wedge tightness

There are many types of slot wedging systems, and each has its own means of testing. The following tests apply to the evaluation of slot wedge tightness and the general implications of various results.

7.1.2.1 Discussion

Stator coil slot wedges fit into grooves near the tops of the stator core teeth. These wedges, along with various filler strips hold stator coils securely in their respective slots. The traditional filler strip is made of a flat sheet of insulating material and is used as a shim between the top of the coil and the underside of the wedge. Depending on the gap between the top of the coil and the bottom of the wedges, several such filler strips of various thicknesses may be used to provide a positive downward clamping action on the top of the coil by the wedges.

A second type of wedging system in general use is designed to apply a downward spring loading force on the tops of the coils. The intent is to provide downward pressure on a coil even after it has settled to some extent in its slot. The key component of this wedging system is the ripple spring filler strip which is placed directly beneath the wedge. This filler is made of fiberglass shaped into a corrugated strip similar to the cross section of a corrugated metal roof. The ripple spring filler is compressed into a near flat condition as the slot wedges are installed over them.

A third type of wedging system in common use is the “piggy-back” process. This system uses a wedge with under-side taper and corresponding slide to allow positive downward pressure on the bars during assembly in the slot. This type wedge can be combined with top and/or side pressure springs the full length of each top and bottom bar. The side ripple springs act as a damper to restrain the bars against electromagnetic forces on the bars. Since the major electromagnetic forces on the stator bars are always downward in the slot, the side springs need only contain mechanical rebound in order to be effective, thus greatly reducing duty on the slot wedging system. These side springs are also used by some manufacturers with conventional top-wedge systems.

A wedging system tends to relax its restraining force on the coils as the machine accrues service time. This is due to shrinkage and creep of all of the various insulation components in the stator slot: strand, turn, groundwall, armor. Also, shrinkage and deformation may occur on the wedges and on the top and side fillers and springs. It is for these reasons that wedging systems need to be periodically tested for tightness.

The electromagnetic force which a stator coil exerts on all restraining components is proportional to the square of the current carried by the coil. For this reason, the acceptable looseness of a stator coil wedging system is determined partially by the armature current rating of the machine.

7.1.2.2 References

— Past inspection reports for the particular machine to be tested.
— The nameplate rating of the machine.
— Documents providing details of the wedging system used in the machine.

7.1.2.3 Test intervals

In general, a test for stator slot wedge tightness is typically performed at five year intervals. However, these intervals may be longer or shorter depending on the type and history of the machine. Other factors could have an overriding influence on this general rule. Air cooled machines frequently operate over a wider

Copyright © 2005 IEEE. All rights reserved.
Copyright The Institute of Electrical and Electronics Engineers, Inc.
Provided by IHS under license with IEEE
No reproduction or networking permitted without license from IHS Not for Resale

temperature range; therefore, they may need more frequent testing. Machines that are speed and load cycled should also be inspected on a more frequent basis. New machines, regardless of size, do most of their loosening in the stator slot area during their first year of service. Significant advantages can be realized by inspecting the machine early in its life. Further, no machine should operate more than five years after initial start-up without a thorough inspection of the slot wedging system.

7.1.2.4 Procedure

The most common type of slot wedge tightness test is performed using a small hand held hammer to tap each wedge and thereby determine its tightness by how it responds to the impact of the hammer. This technique might appear to be crude and likely to produce a wide range of results when testing any given wedge. However, this has proven not to be the case on this time-tested technique. An experienced inspector can easily identify wedges that are very loose, slightly loose, tight or very tight. This type of test is actually an impact test and produces meaningful results on all wedging systems except relatively tight radial ripple spring wedging systems.

This same type of impact test can be accomplished with an electrically actuated hammer by itself or attached to a robotic device which travels down each row of slot wedges and impacts each wedge with the electrically actuated hammer. An accelerometer measures the impact force of the hammer and an eddy current sensor detects the amount of wedge deflection. A similar test technique uses a hand-held acoustic device. These test methods have several advantages over the manual hammer method. First, it impacts each wedge with a calibrated force, thereby producing a repeatable response for each wedge. Second, the response is compared to the same standard each time. Finally, the computer which controls the process makes a permanent record of each wedge response.

Another method can be used when testing wedges that are installed over a ripple spring type of filler. Some of these wedges have a series of holes drilled through them in a row down the center of the wedge. These wedges are commonly known as checking wedges. These holes are spaced such that at least one of them is over a crest of the ripple and one is aligned with the valley of a ripple. When the wedges are first installed, they almost completely flatten the strip which provides very little difference between the depth of a valley and the depth of a crest when measured with a depth gauge from the top of the wedge. Such depth measurements are made through the series of holes drilled in each checking wedge. Checking wedges are installed at intervals along the length of each stator slot.

As the wedged coil shrinks and settles in its slot over a period of time, the ripple spring filler relaxes and the crest-to-valley measurement increases. This increase in crest-to-valley measurement is inversely related to the pressure securing the coil by the slot wedges. Such measurements of ripple spring relaxation can be measured by either a manually operated dial depth micrometer or a robotic device similar to that which automates the impact test. A computer controls the robotic process and records the results. There are some robotically operated wedge checking devices that can operate in the air gap area with the machine field in place.

7.1.2.5 Interpretation

Once a chart is made indicating the location of loose wedges, a determination of corrective action can be made. In general, large machines can tolerate a fewer percentage of loose wedges than smaller machines. Several loose wedges adjacent to each other are a more serious condition than if randomly scattered through the bore or slot. Loose wedges, which are near or at the end of a slot, create a more serious condition than if located near the center of the core. Wedges that are loose enough to allow filler strips to migrate out from under them indicates a serious condition and should be corrected in all cases.

Copyright © 2005 IEEE. All rights reserved.

Copyright The Institute of Electrical and Electronics Engineers, Inc.
Provided by IHS under license with IEEE
No reproduction or networking permitted without license from IHS
Not for Resale

7.1.3 Stator winding insulation resistance tests

These tests stress electrical insulation systems to values which are relatively low, but which are sufficiently searching to detect certain major problems. Two types of tests are described which are usually performed concurrently with the same instrument: insulation resistance, and polarization index. See IEEE Std 43-2000 for specific information on performing the insulation resistance tests.

7.1.3.1 Discussion

Frequently, it is desired to know if a particular insulation system meets the minimum requirements for service or is suitable for application of overvoltage type tests as described in 7.1.4 and 7.1.5. Insulation resistance tests and polarization index tests are used to determine if the insulation system meets these minimum requirements. These tests provide a source of valuable information, but it should be understood that they would only detect some of the more severe problems that are encountered with insulation systems. Typically, they will detect major points of physical damage to the insulation, the presence of absorbed moisture, the presence of surface contamination or a water cooled stator winding which is not completely internally dried. Any of these insulation conditions should be corrected before the equipment under test is returned to service or tested at voltage levels above the rated line-to-neutral voltage of the machine.

The current that results from the applied direct voltage consists of four parts:

a) *Geometric capacitance current:* A reversible current of comparatively high magnitude and short duration, which decays exponentially with time of application, and which depends on the internal resistance of the measuring instrument and the geometric capacitance of the winding.

b) *Absorption (polarization) current:* A current resulting from molecular polarizing and electron drift, which decays with time of voltage application at a decreasing rate from a comparatively high initial value to nearly zero, and depends on the type and condition of the bonding material used in the insulation system.

c) *Surface leakage current:* A current that is constant with time, and which usually exists over the surface of the end-turns of the stator winding or between exposed conductors and the rotor body in insulated rotor windings. The magnitude of the surface leakage current is dependent upon temperature and the amount of conductive material, i.e., moisture or contamination on the surface of the insulation.

d) *Conduction current:* A current that is constant with time, that passes through the bulk insulation from the grounded surface to the high-voltage conductor, and that depends on the type of bonding material used in the insulation system.

In order to have meaningful results from the insulation resistance test, it is necessary that the readings of conduction and surface leakage currents not be taken until capacitive charging current has become negligible and absorption current has become relatively insignificant.

It is important that the temperature of the insulation system be known when performing the insulation resistance test. Insulation resistance is very sensitive to insulation temperature and varies inversely with temperature, on an exponential basis. Insulation resistance measurements are generally corrected to a standard temperature (usually 40 °C) using formulas, nomographs or tables which have been prepared for this purpose. Refer to IEEE Std 43-2000 for correction information.

7.1.3.2 Test intervals

The insulation resistance and polarization index tests should be performed whenever electrical equipment has been out of service for a period of time and is about to be returned to service, during installation of new equipment, prior to any overvoltage test or when the condition of an insulation system is in question.

Copyright © 2005 IEEE. All rights reserved.
Copyright The Institute of Electrical and Electronics Engineers, Inc.
Provided by IHS under license with IEEE
No reproduction or networking permitted without license from IHS
Not for Resale

7.1.3.3 Procedure

Both the insulation resistance test and the polarization index test are performed using a relatively small test instrument capable of producing a constant level of voltage for each of several selectable set points. In testing rotors and other low voltage windings, normally a 250 or 500 volt range should be used. The selectable voltage levels are typically 250, 500, 1000, 2500, or 5000 V dc. The instrument is equipped with a meter which can either indicate current flow through the insulation under test or the actual resistance of the insulation when subjected to the selected voltage.

In order to perform the insulation resistance test, the test instrument leads are connected such that one lead is firmly attached to the grounded frame of the equipment under test. The other lead is firmly connected to the conductor which the insulation system under test is intended to isolate above ground potential. All surrounding equipment and adjacent circuits should be grounded and personnel safety shall be assured.

A test voltage level is selected which is less than the peak voltage to ground to which the insulation is subjected while in service. The test instrument is turned on for a period of one minute and the insulation resistance is read or calculated from the reading on the test instrument meter. Should the test instrument consist of a hand cranked generator, it is important to maintain a relatively constant cranking speed for the one minute period as indicated in the instrument's instruction manual. If only the insulation resistance is desired and no polarization index is desired, the test is complete at the end of one minute and the test specimen shall be safely grounded. Typical values of insulation resistance for rotating machinery are read in megohms.

Should a polarization index be desired, the procedure is the same as that described for insulation resistance testing except the test specimen remains with the test voltage applied across it for a total of ten minutes. Resistance readings are read from the test meter at an elapsed time of one minute and at the elapsed time of ten minutes. (It may be of interest to read and record the value at each minute). Care should be taken to maintain a constant applied voltage for the entire ten minute duration. The polarization index is a dimensionless number equal to the quotient of the ten minute resistance reading divided by the one minute resistance reading.

7.1.3.4 Interpretation of test results

Interpreting the results of the insulation resistance test: The insulation resistance test can be conducted as either a spot test or as a comparison test. The spot test is a single isolated reading of insulation resistance with no previous history. The comparison test compares the present reading to a history of temperature corrected readings on the apparatus, with all of the insulation resistance readings taken at the same voltage.

Interpreting the results of the spot test: The results of the insulation resistance spot test may be interpreted using Table 1. If each phase is tested separately, with the other two phases grounded, the resistance is approximately twice that of the entire winding. Therefore, the observed insulation resistance should be divided by two to obtain a value which, after correction for temperature, may be compared with the recommended minimum values in Table 1.

Copyright © 2005 IEEE. All rights reserved.

Copyright The Institute of Electrical and Electronics Engineers, Inc.
Provided by IHS under license with IEEE
No reproduction or networking permitted without license from IHS
Not for Resale

Table 1—Recommended Minimum Insulation Resistance Values at 40 °C

Insulation Resistance	Description
$R_{(1\ min)} = V + 1$	for most windings made before about 1970, all field windings, and others not described below
$R_{(1\ min)} = 100$	for most dc armature and ac stator windings built after about 1970 (form wound coils)
$R_{(1\ min)} = 5$	for most machines with random-wound coils and form-wound coils rated below 1kV

Where:
$R_{(1min)}$ = recommended minimum insulation resistance in megohms at 40 °C of the entire machine winding.
V = rated machine terminal to terminal rms voltage, kV.

It should be noted that quick, large deviations of the test meter reading while test voltage is applied is usually an indicator of moisture within the insulation, surface contamination or both. Cleaning the surface and drying the insulation system should allow for more meaningful test results. Such cleaning and drying will also be necessary if the equipment is to be returned to service or tested as described in 7.1.4 or 7.1.5.

Interpreting the results of the comparison test: The results of the insulation resistance comparison test may reveal a great deal of information about the insulation system. This interpretation relies on the accumulation of insulation resistance data over an extended period of time during the life of the equipment. The time period may be months or years and is dependent on the type of apparatus and reliability required. When data are graphed, trends may be clearly indicated and maintenance may be scheduled before failure.

Interpreting the results of the polarization index test: The polarization index (or PI) is the ratio of the ten minute insulation resistance value and the one minute value. For a large rotating machine, the charging time may be quite long and the polarization index test allows meaningful data to be recorded while the insulation is still charging.

For small stators the polarization index will typically be equal to one or slightly higher. Larger machines may exhibit a polarization index of 1.5 to 2 or more. If the one minute Insulation Resistance is above 5000 megohms, the calculated PI may not be meaningful for reasons of test equipment sensitivity and other effects described in IEEE Std 43-2000. In such cases, the PI may be disregarded as a measure of winding condition. Table 2 shows typical values of polarization index for different thermal classes of insulating materials.

Copyright © 2005 IEEE. All rights reserved.
Copyright The Institute of Electrical and Electronics Engineers, Inc.
Provided by IHS under license with IEEE
No reproduction or networking permitted without license from IHS
Not for Resale

Table 2—Minimum polarization index values

Insulation Class	Minimum P. I.	Comments:
105 °C	1.5	—
130 °C 155 °C 180 °C	2.0	Water cooled windings will typically be 1.0 until fully dried internally. Air cooled machines if contaminated will often be near or at 1.0 until cleaned and dried. If an over-potential test is to be performed, it is advisable that the polarization index be at least 2.0 or higher on stator windings.

In general, a high value of polarization index suggests but does not confirm that the insulation system is in good condition. A polarization index near 1.0 for stator windings indicates that immediate corrective action may be required. The polarization index can be dependent on the materials of the insulation system. Consult the manufacturer if polarization index values are consistently encountered outside the above guidelines. For older insulation systems, such as asphaltic-mica or shellac mica-folium, PI values above 5.0 may indicate that the insulation system has deteriorated, and the insulation system condition may need to be addressed.

7.1.4 Controlled direct overvoltage tests

7.1.4.1 Discussion

It is important to note that the dc overvoltage test will identify both general coil deterioration and localized incipient failures. If inspection of the stator reveals no unusual deterioration mechanisms (i.e. water leaks, mechanical looseness or slot movement) the probability is high that a successful test of the stator will assure successful operation until the next major outage. On the other hand, localized damage can severely alter the remaining life of the insulation system. In these cases, finding the damage through overvoltage testing may negate the remaining life in the system and force a repair. The significant point is that if there is a test failure the timing will allow the work to be done in a less critical time as well as prevent a more damaging failure. In reaching the basic decisions relative to performance of stator overvoltage tests, the owner is faced with divergent and conflicting alternatives:

a) Perform a suitability-for-service overvoltage test such as described in IEEE Std 95-2002 and risk a winding failure during the test, or

b) Conduct an overvoltage test at a reduced value and with a reduced risk of winding failure during the test, or

c) Omit overvoltage test altogether and accept increased risk of service failure, forced outage, and possible severe machine damage.

In the final analysis this is a risk assessment decision. Depending on the importance of a particular machine to the system and other business and economic factors, judgment should be made among the options to overvoltage test at a reduced voltage value, or perform a dc controlled overvoltage test, or omit the overvoltage test altogether.

These tests apply to the insulation testing of machine stator windings using dc controlled overvoltage tests. It does not cover low voltage insulation tests, or ac and dc proof tests.

Copyright © 2005 IEEE. All rights reserved.

Copyright The Institute of Electrical and Electronics Engineers, Inc.
Provided by IHS under license with IEEE
No reproduction or networking permitted without license from IHS
Not for Resale

The dc controlled overvoltage tests are valuable diagnostic tools for several reasons. They provide a leakage current/applied voltage relationship that is not provided with either the ac or dc type of proof tests. The observed current at the end of a test level time period is representative of leakage current since charging and absorption currents are reduced and nearly stabilized. The test results can also be compared with previous test results in a way that can aid in detecting changes in the insulation system. If the winding under test is not clean and dry, the time graded dc test may also provide the operator with the opportunity to detect an impending flashover or insulation puncture and abort the test. As with other dc tests, there is no destructive corona developed at the higher test voltages.

The three dc controlled overvoltage tests described in this document are intended to allow the operator the chance to observe non-linear increases in leakage current as a function of voltage separate from the absorption and charging currents. The least complicated of the three variations is the stepped overvoltage test. This test allows most of the charging and absorption current to drop to negligible levels by using fixed time and voltage steps. The time-graded overvoltage test is designed to linearize the absorption current as a function of voltage thus making changes in leakage current readily discernible. This is done by varying the time steps using measured winding conditions to select appropriate time intervals for each voltage step. The ramped voltage test is an automated test that ramps the applied dc voltage to the desired maximum level at a constant rate (e.g., 1 kV/min) and thus automatically linearizes the geometric capacitive and absorption components of the current so that small, meaningful variations in the measured current are easily observed.

7.1.4.2 Test intervals

Controlled overvoltage tests are frequently used as an alternative to an ac or dc overvoltage proof test. They are used to qualify new windings, service aged windings during normal scheduled maintenance outages and to test repairs made on high voltage coils.

7.1.4.3 Safety

The capacitance charging current and absorption current generated by application of the test voltage are reversible. Upon removal of the test voltage source the test specimen will remain charged and will be a hazard.

Warning: The energy stored within the test specimen may be lethal and shall be dissipated safely.

Capacitive test objects which have a solid dielectric require special precautions. These objects should be discharged using a resistive discharge device and then short-circuited and grounded after dc testing. It is recommended that the test specimen and test equipment be discharged to ground by short circuiting for a period of at least four times as long as the test voltage was applied, but for not less than one hour. Before bare hand contact is made, the absence of voltage shall be confirmed with the test specimen ungrounded after a period of 10 min, or the specimen should remain solidly grounded. Failure to observe this precaution may result in a buildup of voltage on the object due to residual dielectric absorption in the insulation. The external ground should remain on the winding until the dielectric absorption currents have dissipated or until the winding has been reconnected to a solidly grounded circuit. This requires that the ground be left in place, in accordance with normal safe work practice.

7.1.4.4 Precautions

Moisture and surface condition: Moisture within the insulation and surface contamination of the insulation may reduce the insulation resistance significantly. Should the measured insulation resistance be unsatisfactorily low, the machine should be dried or cleaned before proceeding. Insulation resistance and polarization index should be at or above the minimum values specified in 7.1.3.4 (Table 1).

--`,,`,`,-`-`,,`,,`,`,,`---
Copyright © 2005 IEEE. All rights reserved.
Copyright The Institute of Electrical and Electronics Engineers, Inc.
Provided by IHS under license with IEEE
No reproduction or networking permitted without license from IHS
Not for Resale

Test atmosphere: It is well known that as the atmospheric pressure decreases, the disruptive flashover voltage is reduced (Paschen's Law). It is further known that the disruptive discharge voltage for positive, negative, and alternating voltages are not identical. When testing at high altitude with high voltages, precautions may be required to ensure disruptive discharge does not occur. When testing in a hydrogen atmosphere, gauge pressure should be at rated machine pressure or 200 kPa (30 PSIG), whichever is lower, in order to compensate for the lower dielectric flashover properties of hydrogen in comparison with air.

For gas inner-cooled machines consult the manufacturer for precautions regarding connecting vent tube potential to the winding potential.

Fire hazard: High voltage tests should never be conducted on a closed machine with an air atmosphere, due to the possibility that fire ignition may occur during test. The operators may not become aware of the fire; and even if it is detected, may not be able to access for extinction.

Application of test voltage: It is important that the test voltage be raised gradually to avoid surges or transients being developed which may exceed the insulation stress rating. The test voltage should be applied such that the desired value is not exceeded. Further, the test voltage should be applied to the apparatus long enough to allow full charging of the insulation system.

Discharge of test apparatus and specimen: Proper discharge of the test apparatus is important from the standpoint of operator safety as was discussed in 7.1.4.3. Improper discharge of the apparatus under test may cause damage to that apparatus by creation of large transient overvoltages and traveling waves. These traveling waves may cause voltage multiplication by factors of as much as four times the applied voltage. To avoid damage created by discharge transients it is recommended that the test specimen be discharged through a suitable resistive load prior to the application of the direct short circuit to ground. In this way, charge is removed from the specimen slowly without generation of surge voltages.

7.1.4.5 Procedure

A. Stepped overvoltage test

This test is performed only on stator windings of rotating machines. The applied voltage is usually applied to one phase of the stator winding and both ends of that winding should be shorted together during the test. The other phases are grounded. Each of the two phases that are grounded should have their ends shorted together. This will test insulation between phases as well as phase-to-ground. If phase-to-ground test information is all that is desired all three phases could be tied together and tested to the frame of the stator. The machine under test should be isolated from all other equipment not intended for testing. This generally includes power cables for motors, isophase bus and transformers for generators. All stator winding RTDs should be shorted and grounded. The CTs should be shorted and grounded; and if the field is installed, the collector rings should be shorted and grounded.

The upper limit of the applied test voltage varies depending upon the known condition of the winding, previous test results and equipment history. With these factors considered, IEEE Std 95-2002 should be used as a guide in determining the test level.

The controlled overvoltage test for rotating machines should be performed only after the winding has been found to have a polarization index greater than 2 at an applied dc voltage level approximately equal to the rated line to ground ac voltage of the machine. This initial test level which is used to determine the polarization index is considered to be the first step in the series of voltage steps. Succeeding steps should not exceed 3% of the final test level rounded up to the nearest kilovolt and should be held for a period of one minute before proceeding to the next step. The minimum recommended voltage step is 1 kV. Current readings should be made at the end of each one-minute interval. Steps are made in succession until reaching the final level.

Copyright © 2005 IEEE. All rights reserved.

Copyright The Institute of Electrical and Electronics Engineers, Inc.
Provided by IHS under license with IEEE
No reproduction or networking permitted without license from IHS
Not for Resale

A plot of current vs. voltage should be recorded on a log log scale and should be nearly linear. Any significant deviation from linearity should be cause for concern and termination of the test.

B. Graded-time overvoltage test

This is a dc leakage current test that allows for gathering quantitative information relating to the condition of the insulation. IEEE Std 95-2002 should be used to select a maximum test voltage. This maximum test level may be adjusted downward depending on the known condition of the insulation system. It is generally assumed that the applied voltage should exceed the stator normal operating voltage. The winding connections for this test are the same as those for the fixed incremental step test described above. The controlled overvoltage test for rotating machines should be performed only after the winding has been found to have a polarization index greater than 2 at an applied dc voltage level approximately equal to the rated line to ground ac voltage of the machine.

The results of a time graded leakage current test are usually compared with results of previous test on the same winding to determine the condition of the insulation system. Comparative studies of this type can help in the detection of a failing insulation system because of physical distress or the aging process. Winding maintenance as well as complete rewinds are often based partially on the results of this test.

The time graded overvoltage test is a special type of controlled overvoltage test. This test is designed to linearize the charging and absorption currents as a function of voltage thus making changes in leakage current readily discernible.

The ten minute period during which the PI is obtained is also used to plot voltage vs. current on a log log scale graph. Points to be plotted are taken at elapsed times of 0.5, 0.75, 1.0, 1.5, 2 min and each minute thereafter up to 10.

Near the end of the 10 min period, several current levels need to be identified on the plotted curve and these values have to be entered in the formula for determining the time schedule of applied voltage (IEEE Std 95-2002). The resulting calculation produces a number “N” which is dimensionless and corresponds to a prescribed time schedule for making voltage steps up to the maximum desired test level. These voltage steps are usually calculated to be 20% of the initial applied voltage that was held for 10 min. A chart containing the prescribed time schedule is included in Annex A.2 of IEEE Std 95-2002.

Although this test is more difficult to perform than a controlled overvoltage test conducted at even time intervals, it does result in changes in leakage current being easier to detect.

C. Ramped overvoltage test

This test requires automated test equipment and enables various ramping rates of the test voltage to be selected. The same procedure is used as in making the stepped overvoltage test except that the ramp in voltage starts at the voltage level where the ten minute PI test is performed and is actually a continuation of that test. This means that the applied voltage for measuring the PI is not removed before starting the ramp. The winding connections for this test are the same as those for the stepped overvoltage test described above. This test provides a method whereby the effects of geometric capacitive and dielectric absorption currents are linearized as a function of voltage so that small, meaningful variations in the measured current are more easily observed.

The dc ramped voltage test provides similar information to the above described controlled overvoltage tests, but without the requirement of plotting and calculating while the test is in progress. By applying a dc ramp with a fixed rate of rise, the absorption current is made a linear function of applied voltage, thus allowing variations in insulation leakage currents to be revealed. Any variation in the rate of rise of the applied voltage will, however, create a nonlinear absorption current, thus reducing the validity of the test.

The suggested rate of rise of test voltage is 1 kV/min.

Copyright © 2005 IEEE. All rights reserved.
Copyright The Institute of Electrical and Electronics Engineers, Inc.
Provided by IHS under license with IEEE
No reproduction or networking permitted without license from IHS
Not for Resale

7.1.4.6 Interpretation of results

Interpreting the results of the three dc controlled overvoltage tests is the same. If the leakage current increases in a linear manner up to the maximum test voltage, the winding is generally considered suitable for service. Typical resistance values of healthy insulation systems measured at maximum test voltages may range from 500 to 5000 megohms.

Any deviation from a linear log current/voltage relationship should be cause for concern. If the current starts to rise faster than the voltage, the insulation system may be reaching the point of breakdown and the test should be immediately aborted. If the current increase starts to lag the voltage increase, there is usually a problem with the test setup or the operation of the test. Failure of the insulation can not necessarily be anticipated and prevented with this type of test.

7.1.5 Overvoltage proof test (AC, DC, 0.1 Hz)

7.1.5.1 Discussion

It is important to note that the overvoltage test will identify both general coil deterioration and localized incipient failures. If inspection of the stator reveals no unusual deterioration mechanisms (i.e. water leaks, mechanical looseness, slot contents movement) the probability is very high that a test of the stator will result in successful operation until the next major outage. On the other hand, localized damage can severely alter the remaining life curve of the insulation system. In these cases, finding the damage through overvoltage testing, will negate the remaining life in the system and force a repair. The significant point is that the timing will allow the work to be done in a less critical time as well as prevent a more damaging failure.

In reaching the basic decisions relative to performance of stator overvoltage tests, the owner is faced with divergent and conflicting alternatives:

a) Perform a suitability-for-service overvoltage test such as a 1.5 times line to line voltage test level and risk a winding failure during the test, or

b) Conduct an overvoltage test at a reduced value and with a reduced risk of winding failure during the test, or

c) Omit overvoltage test altogether and accept increased risk of service failure, forced outage, and possible severe machine damage.

In the final analysis this is a risk assessment decision. Depending on the importance of a particular machine to the system and other business and economic factors, judgment should be made among the options to overvoltage test at a reduced voltage value, or perform a dc controlled overvoltage test, or omit the overvoltage test altogether.

These tests cover the overvoltage proof testing of rotating machinery stator windings using dc, power frequency and 0.1 Hz ac testing methods. These proof tests produce pass/fail results and are not intended to produce quantitative results.

Overvoltage tests may be used on a scheduled basis (usually to coincide with scheduled outages of the equipment being tested) to determine the condition of conductor insulation. These tests are also conducted on machines that have been subjected to severe electrical, mechanical, or thermal stress as well as machines that have just been subjected to a winding repair.

Most types of diagnostic tests performed on power apparatus have advantages and disadvantages relative to their ability to detect weaknesses without damaging the test specimen in the process. Overvoltage testing of power equipment can be done using several techniques, each with its own advantages and disadvantages.

Copyright © 2005 IEEE. All rights reserved.

Copyright The Institute of Electrical and Electronics Engineers, Inc.
Provided by IHS under license with IEEE
No reproduction or networking permitted without license from IHS
Not for Resale

Proof testing of power equipment with dc has the advantage of using a small, relatively inexpensive test set. DC testing has the disadvantage of stressing the end winding insulation system to a disproportionately high level relative to the ac voltage stress it experiences in service.

The test voltage level normally recommended for service proof test is 1.25–1.5 times the rated line-to-line voltage of the machine. However, values as low as 1.1 times line-to-line voltage are sometimes used when a rewind is contemplated in the near future.

7.1.5.2 Test intervals

Overvoltage proof tests are generally made to test the quality of a new winding, to test the quality of a service aged winding as part of scheduled overhaul and inspection activities, and to test the quality of a winding repair.

7.1.5.3 Precautions (also refer to 7.1.4.4)

It is important to recognize that insulation with a known weakness may be serviceable for a period of time needed to procure replacement windings. In such cases, it may be advisable to test the insulation system to a value only slightly above normal operating levels.

The test set as well as all windings and nearby components and equipment not under test should be solidly grounded for the duration of the test.

If a high alternating voltage test is to follow a high direct voltage test, it is advisable to double the minimum grounding time to ensure that the absorbed charge does not contribute to an insulation puncture when the alternating voltage test is applied.

A machine should not be placed in service after a high direct voltage test until the winding has been grounded and all stored energy is dissipated.

For gas inner-cooled machines consult the manufacturer for precautions regarding connecting vent tube potential to the winding potential.

7.1.5.4 Procedure

a) Direct Overvoltage Test

A dc high potential test is used as a proof test for the winding insulation systems of rotating machines. This test is used as a pass/fail test and will not produce usable quantitative information. The test voltage is usually applied to one phase at a time with all other phases grounded. The magnitude of the test voltage is determined using IEEE Std 95-2002 and ANSI C50.10-1990 as guides. The known condition of the winding as well as other factors should also be considered when selecting the level of test voltage. Prior to conducting the dc high potential test, a satisfactory polarization test and insulation resistance test should be conducted to prove the minimum capabilities of the insulation and its lack of contamination. Another common practice is to test all three phases at one time with reference to ground. This, however, does not test phase-to-phase insulation.

The test voltage should be applied starting at less than 5% of the maximum intended test voltage and gradually increased to the maximum test voltage over a period of time that will keep the test current at no greater value than 50% of the scale reading of the largest scaled current meter on the test equipment. Care should be taken to assure that over-shoot of test voltage does not inadvertently occur. This maximum applied test voltage is held for one minute and then gradually reduced to zero. Care should be taken to prevent any sudden change in voltage since the resulting collapsing field will induce voltage in windings and other objects not under test.

Copyright © 2005 IEEE. All rights reserved.
Copyright The Institute of Electrical and Electronics Engineers, Inc.
Provided by IHS under license with IEEE
No reproduction or networking permitted without license from IHS Not for Resale

At the end of a dc test, when the applied voltage has been removed and the voltage of the winding under test has decayed to approximately half the maximum test voltage, a suitable grounding resistor should be applied to discharge the tested winding. Such resistor grounding devices are usually supplied as part of the high voltage test set. Once the grounding resistor has reduced the voltage of the winding under test to zero, a solid ground should be applied for approximately four times as long as the test duration, or for one hour, whichever is longer. This grounding time is required to dissipate the stored energy of the winding resulting from absorption current. Dissipation of the absorbed charge should not be accelerated by the application of alternating potential or by the application of direct voltage with reversed polarity. Severe insulation voltage gradients will be introduced in the winding if this is attempted.

b) Power Frequency ac Overvoltage Test

The use of power frequency ac overvoltage as a winding proof test is a common practice for both rotating machinery manufacturers and users. It is used to prove the quality of a new winding and to prove the condition of windings that have been in service. See ANSI C50.10-1990 for the appropriate test voltage and IEEE Std 4-1995 for testing guidelines.

It should be understood that insulation with a known weakness may be serviceable for a period of time needed to procure replacement conductors. In such cases, it may be advisable to test the insulation system to a value only slightly above normal rated line-to-line voltage.

The winding to be tested should be electrically isolated from all other windings. The isophase bus of a machine may be included in the test circuit, but all transformers and other devices with a significant amount of capacitance should be disconnected and grounded. All nearby shields, ducts, and hardware should be grounded. The frame of the test set should be solidly grounded.

The applied voltage should be limited to only that portion of the winding under test and should be slowly raised to the selected test value calculated for the equipment starting at less than 5% of final test value. This selected value depends on the type of equipment under test, the age of the insulation and how searching the operator desires to be in locating a weakness.

Once the selected test level has been reached, the applied voltage is usually held on the conductor for a period of one minute. It is at this time that corona activity will be at its greatest and holding the test voltage at that level for extended periods of time may cause insulation damage to an otherwise serviceable insulation system.

Once the test voltage has been reached and held for the desired length of time, the applied voltage should be slowly reduced to zero over a period of time usually ranging from five to ten seconds. It is not advisable to cause a step change in the applied test voltage.

After the applied test voltage has been shut off, the conductor under test should be grounded for a period of time determined by the level of test voltage applied, the capacitance of the circuit under test and how long the circuit was energized, typically one hour.

c) Low Frequency - 0.1 Hz ac Overvoltage Test

The 0.1 Hz overvoltage test was designed for use in testing the stator windings of rotating machines. The intent was to replace the power frequency test with a test method that would provide the same information with a smaller test set. For this reason, the 0.1 Hz overvoltage test may be used in place of most applications of the 60 Hz test. See IEEE Std 433-1974 (under revision) for the appropriate test voltage and testing guidelines.

Even though this is an ac test, the tested conductor may maintain a charge after the test is complete. This low frequency test can have some of the properties of a dc test if the test voltage is suddenly removed. For this

Copyright © 2005 IEEE. All rights reserved.

Copyright The Institute of Electrical and Electronics Engineers, Inc.
Provided by IHS under license with IEEE
No reproduction or networking permitted without license from IHS
Not for Resale

reason, all safety precautions shall be taken that are appropriate in performing the high potential test regardless of method.

The procedure for performing the 0.1 Hz overvoltage test is basically the same as that for performing a power frequency test. The test equipment should produce a well-regulated 0.1 Hz sinusoidal waveform. The winding or conductor to be tested is electrically isolated from all other conductors. The applied test voltage should be limited to only that portion of the circuit for which test results are required. All adjacent circuits, shields, ducts and hardware should be grounded. The frame of the test set and stator frame shall be solidly grounded.

The applied voltage should be slowly raised to the selected test value calculated for the equipment starting at less than 5% of final test value. This maximum value depends on the type of equipment under test, the age of the insulation and how searching the operator desires to be in locating a weakness.

Once the selected voltage test level has been reached, that level is usually held on the conductor for a period of one minute. It is at this time that corona activity will be at its greatest and holding the maximum test voltage at that level for extended periods of time may cause insulation damage to an otherwise serviceable insulation system.

Once the selected test voltage has been reached and held for the desired length of time, the applied voltage should be slowly reduced to zero over a period of time usually ranging from five to ten seconds. It is not advisable to cause a step change in the applied test voltage.

After the applied test voltage has been shut off, the conductor under test should be grounded for a period of time determined by the level of test voltage applied, the capacitance of the circuit under test and how long the circuit was energized, typically one hour.

7.1.5.5 Interpretation

The dc, 0.1 Hz, 50 Hz and 60 Hz overvoltage proof tests are pass/fail tests. The test specimen either survives the highest level of test voltage without failure or a puncture of the insulation occurs which is observed as a discharge through that medium. The amount of current drawn for a given level of test voltage may vary (within rather broad limits) from one perfectly good test specimen to another, depending on test conditions. Insignificant differences in the insulation, atmospheric conditions and other surrounding objects may affect the amount of test current drawn. For this reason, the current/voltage comparisons from one test to the next are not a reliable indication of insulation quality.

7.1.6 Stator winding insulation power factor and tip-up tests

7.1.6.1 Discussion

The relative void content, quality of resin composition, and cure of form wound stator coils or bars may be assessed by measurement of the power factor (dissipation factor). Power factor measurements are routinely performed by manufacturers of stator coils and bars as part of their quality control procedures. The measurement of power factor and power factor tip-up on installed stator windings employs the same techniques and principles. However, there are a number of important differences when performing such a measurement on a complete winding. This procedure describes methods to measure the power factor and power factor tip-up, as well as outlining potential problems in obtaining this parameter for complete stator windings and interpretations thereof.

Measurement of power factor is essentially a measure of the dielectric loss of the winding insulation. In this sense, the stator winding is treated as a capacitor in which the dielectric is the insulation system bounded by two electrodes: the high voltage copper conductors and the stator core iron. Consequently, the portion of the end winding beyond the semiconductive slot coating and stress control coating has a relatively small

--`,,`,`,,`-`-`,,`,,`,`,,`---

 Copyright © 2005 IEEE. All rights reserved.

Copyright The Institute of Electrical and Electronics Engineers, Inc.
Provided by IHS under license with IEEE
No reproduction or networking permitted without license from IHS Not for Resale

capacitance to ground, but is the major component affecting inter- phase capacitance. (See IEEE Std 286-2000)

If one takes the case of the ideal capacitor, which is lossless, the power factor is zero. Furthermore, no increase in loss would be observed as the applied voltage is increased. However, in practice, all systems with a capacitive component will be subject to some dielectric losses as the voltage is increased. In the case of stator windings, the losses arise principally from voids in the insulation system, and the materials used to construct the insulation. As the voltage applied to the winding is increased, the probability of driving voids in the insulation into partial discharge increases. When a partial discharge occurs, losses in the winding insulation will increase. The consequence of these increased losses is to increase the power factor.

A convenient means of quantifying the increase in loss, as the applied voltage is increased, is a parameter known as the power factor tip-up. The tip-up is essentially the change in power factor between low and high voltage. Exact definitions of the voltages used for tip-up measurements will be found in IEEE Std 286-2000 and IEC 60894.

The purpose of the following portion of the guide is to provide a means for users of large high voltage rotating machines to perform meaningful power factor measurements on installed stator windings. Procedures for making measurements on individual stator bars and coils are given in the above-mentioned IEEE and IEC standards. IEEE Std 286-2000 also addresses tests on complete windings. Potential problems associated with performing power factor testing on complete stator windings are discussed below, and some indication of what may be deemed acceptable values of power factor tip-up are given.

7.1.6.2 Procedure

The procedures to be described assume that the test will be performed at power frequency. Alternative schemes for performing measurements at frequencies other than this are available; however, normal industry practice is to carry out the measurement at power frequency. This is because it is logical to carry out the tests at the frequency of operation of the rotating machine and also most commercial instruments used for such measurements are designed for power frequency operation. Use at other frequencies may compromise the accuracy of the equipment.

Aside from safety considerations and practices described in previous clauses of this guide, the basic requirements for the performance of a power factor test are 1) an ac high voltage power supply and 2) a means of measuring the dielectric loss in the stator winding. The power supply should be capable of energizing the winding to at least nominal line-to-ground voltage. Normally, the power supply should be capable of energizing at least a whole phase; however, how much of the winding needs to be energized simultaneously is at the discretion of the test operator and depends also on the winding design.

Power factor is normally measured by means of a bridge circuit. An important feature of testing installed equipment is that the stator core is already grounded; therefore, the measuring instrument and power supply should be capable of working with grounded equipment. The manufacturer's instruction manual should be consulted for information regarding the operation of the instrument.

Normally, each phase of the winding is tested in turn. If this is not possible due to supply limitations, further division of the winding is required. While testing one phase, the other two phases are grounded. Having ensured that all safety rules have been complied with, the voltage applied to the stator winding is raised to a level at which partial discharge (the main contributor to increased losses) is unlikely to be present. Typically, this level is about 20% of the nominal line-to-ground voltage of the winding. Further guidance on the appropriate levels is given in the previously cited IEEE and IEC publications. At this point, the power factor is measured and recorded. The applied voltage is then raised, typically to the full nominal line-to-ground voltage of the winding (although other levels can be used at the discretion of the test operator). The power factor is measured and recorded at this new voltage. The difference between the measurements made

Copyright © 2005 IEEE. All rights reserved.

Copyright The Institute of Electrical and Electronics Engineers, Inc.
Provided by IHS under license with IEEE
No reproduction or networking permitted without license from IHS
Not for Resale

at high and low voltage is the power factor tip-up. Upon completion of this measurement, the voltage should be reduced to zero and the winding shall be grounded.

7.1.6.3 Specific difficulties associated with testing complete stator windings

The measured power factor represents the average value over the entire sample. For this reason, the power factor test does not necessarily respond to only the most severely deteriorated part of the winding. That is, one is unable to determine whether a high power factor or tip-up value is due to a large number of coils/bars in the phase individually containing a low number of small voids, or due to a severely deteriorated single coil or bar. The latter case is potentially more severe from the point of view of winding longevity. In such a case where high values of power factor or tip-up are recorded, further division of the winding into individual parallels or coil groups may be necessary to ascertain the extent of any damage. Alternatively, a partial discharge measurement, which is more spatially sensitive, could be made. In addition, power factor tip-up values may be significantly affected by surface conditions, such as dirt contamination and moisture.

A further difficulty associated with testing complete stator windings, rather than individual coils or bars, is the presence of a stress control coating which is often applied to the ends of the coil or bar. The purpose of this coating is to reduce the electrical stress locally at the point where the coil or bar exits the stator core. Techniques to guard out the contribution of the stress grading materials are described. However, for tests on complete windings such procedures are impractical, consequently absolute values of power factor cannot be obtained for installed windings; and some care should be exercised when making conclusions on the condition of the winding based on power factor measurements. How large an influence the stress grading materials will have on the measurement is, to a large extent, determined by the size of the stator. In long core machines, such as large capacity turbine generators with active core lengths of the order of several meters, the effect of the stress control coating may be minimal. However, in short core machines, such as motors or smaller generators, the ratio of length of stress grading to core length may not be negligible.

7.1.6.4 Interpretation

From the above discussion, proper interpretation of power factor and tip-up measurements is not trivial. However, if attention is paid to the potential pitfalls of the test and it is used in conjunction with other diagnostic techniques and in a trending mode, some guidelines for interpretation are possible.

Consequently, measurements of tip-up are of most value when trended over a period of time. As a general guide, the tip-up on an epoxy (or polyester) mica winding may be of the order of 1% depending upon the effect of the stress control coating. Windings manufactured from other materials and by some processes can exhibit much higher tip-up values with a reasonable expectation of normal service life. Older asphalt type windings can have tip-up values up to 5%. High power factor tip-up results do not necessarily mean that the winding is deteriorated. Rather, a high reading could result from the materials used in manufacturing the insulation system. In this case, the manufacturer of the winding or the materials should be consulted.

Anomalies such as apparently negative tip-up are generally believed to be due to the losses in the resistive grading materials a) predominating over the groundwall dielectric losses and b) increasing at a lower rate due to the non-linear resistance characteristic. Also, in new windings a decrease in power factor and tip-up values has been observed during the initial operational period. This phenomenon is believed to be due to some further cure of the resin after manufacture.

One important mechanism of deterioration which the power factor measurement is unlikely to detect is that due to slot discharge. This is because the complete length of the winding is normally externally energized for the purpose of these measurements; and furthermore, usually only the line end coils or bars are affected by slot discharge. The probability of the winding being so severely deteriorated that the losses from such defects would dominate the nonlinear stress grading and averaging effects is low.

Copyright © 2005 IEEE. All rights reserved.
Copyright The Institute of Electrical and Electronics Engineers, Inc.
Provided by IHS under license with IEEE
No reproduction or networking permitted without license from IHS
Not for Resale

7.1.7 Stator winding turn-to-turn insulation test

7.1.7.1 Discussion

Coils with multiple turns are often used in short machines such as hydrogenerators, small turbo-generators and motors to build the voltage in a circuit to the required level. A coil with multiple conductors will have several separately insulated conductors within one groundwall. If this conductor insulation deteriorates, and a short occurs between the conductors, extremely high currents are induced into the shorted turn and extreme damage will occur. This type of fault can melt several centimeters of copper out of the coil and create holes in the laminated core.

In the factory, multiple conductor coils are tested for turn shorts using various methods. One method utilizes devices which input a pulse of voltage to the individual coil and monitor the resulting voltage wave shape (reference IEEE Std.522-1992). Another method utilizes a high frequency ramped voltage applied to the coil and measurements of inductance as the input voltage is increased. These tests are generally designed to electrically stress the conductor insulation to higher levels than are realized during normal operation starting transients to search out deteriorated or abnormal turn insulation. Factory test methods usually test one or two coils at a time prior to installation in the core. Unfortunately this type of test is not easily applied to a wound machine. A qualified testing agency or the manufacturer with the appropriate specialized testing equipment should be contacted if this type of test is to be performed.

Various methods and adaptations of the factory methods have been used for wound machines. Most of these methods have been either highly complex or marginally effective. Applied pulse methods are relatively adaptable, but only stress the first few turns of the segment which is under test; therefore, if an entire phase or phase parallel is tested in this way, only the line conductors are stressed to operating levels.

RSO (Recurrent Surge Oscillograph) or TDR (Time Domain Reflectometry) could be considered to locate turn shorts. These methods only locate low resistance faults, and do not stress the insulation to search for areas which are deteriorated. Faults of this low resistance on an in-service machine would already have seen major damage. These tests could be useful for cases where coils are spliced into a winding, to verify that turn insulation has been applied.

One method which has been utilized with some success in the field is a variation of the surge test where the surge is induced into each coil by magnetically coupling a surge coil to the coil under test (reference IEEE Std 522-1992). CAUTION: This test can damage the insulation if it is not properly performed. The surge coil is wound into laminated core sections which are placed over the slots which include the coil under test. See Figure 1. With good coupling the volts per turn in the surge coil is nearly the same as the volts per turn of the coil under test. An oscilloscope with a suitable voltage divider displays the resulting surge voltage in the winding. In addition to the voltage induced in the stator coil under the surge coil, voltage is also induced in the two other coils having one coil side in the same slots. These coils may be either in the same phase or different depending on the winding arrangements and usually varies in a repeatable pattern for successive slots in the winding. Therefore, the voltage existing across the winding will vary in a repeatable pattern as the surge is induced successively from coil to coil in the winding. A short circuit in the coil under test markedly affects the voltage at the winding terminals and the indication of the short is therefore very definite. In making the test, several levels of test voltage are applied to each coil. This is advantageous because, in addition to indicating the voltage level at which failure occurs, it more positively identifies the shorted coils.

Copyright © 2005 IEEE. All rights reserved.

Copyright The Institute of Electrical and Electronics Engineers, Inc.
Provided by IHS under license with IEEE
No reproduction or networking permitted without license from IHS
Not for Resale

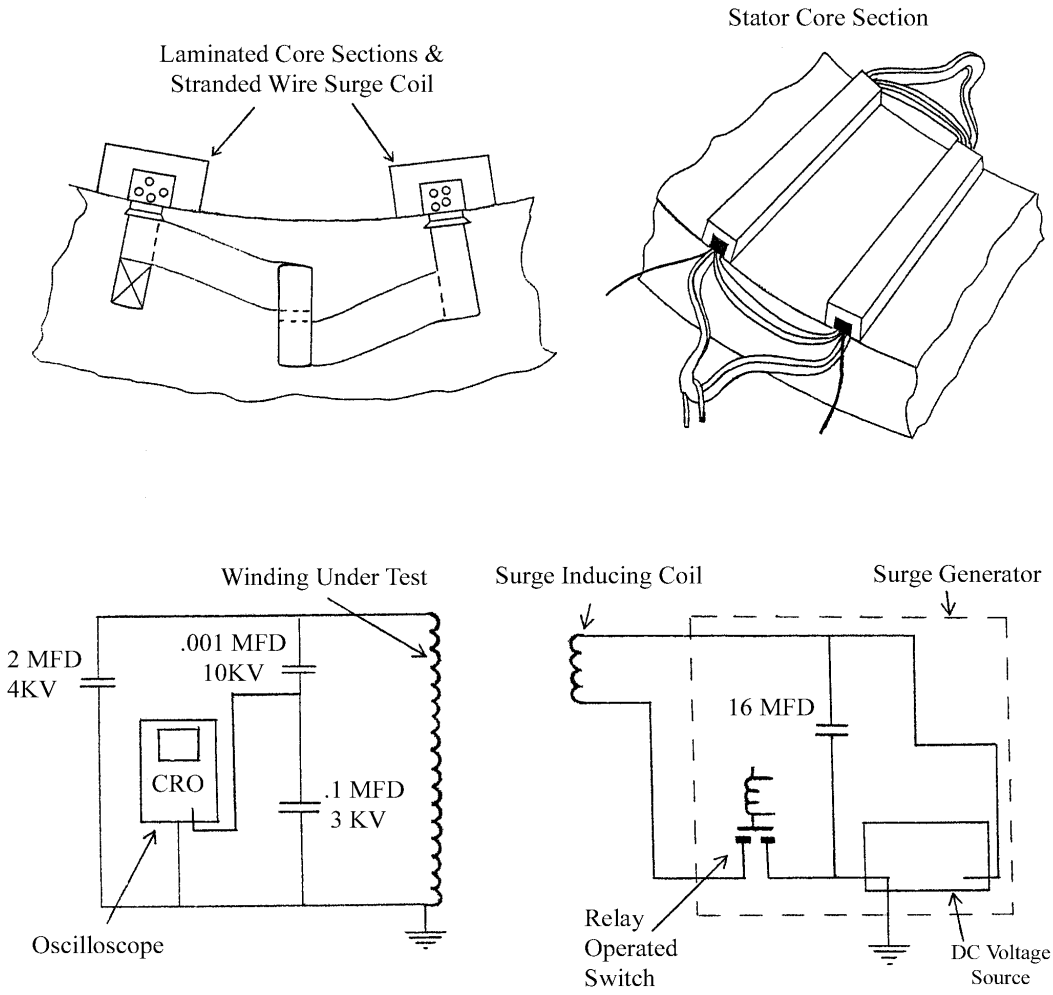

Figure 1—Turn-to-turn surge test with laminated core

7.1.7.2 Test Intervals

This type of test should be considered when deterioration to the conductor insulation of a coil is suspected. If a machine has been diagnosed with high internal partial discharge the conductor insulation may be deteriorated. Also if work has been performed on the winding such as splicing in a new coil, conductor insulation at the splice may be tested to verify its adequacy for service.

7.1.8 Stator winging partial discharge test

7.1.8.1 Discussion

Partial discharge is present in the majority of high voltage machine stator windings, that is those rated 4 kV and above. Basically, partial discharges are sparks which occur when the breakdown strength of a gas gap

Copyright © 2005 IEEE. All rights reserved.
Copyright The Institute of Electrical and Electronics Engineers, Inc.
Provided by IHS under license with IEEE
No reproduction or networking permitted without license from IHS
Not for Resale

bordered by at least one dielectric covered surface is exceeded. The main sources of partial discharge in high voltage stator windings are:

— included gaseous voids in the groundwall insulation

— slot discharges, which occur between the bar/coil surface and the core iron

— discharges in the end winding portion of the stator

Partial discharge can be viewed as an erosive mechanism per se or a symptom of other electrical, thermal, mechanical or chemical problems. Consequently, partial discharge measurements, when properly performed and interpreted, can yield useful information on the condition of the stator winding insulation system, and the stress control and winding support systems.

The measurement techniques covered in this guide are confined to those applied when the unit has been removed from service. Probe measurements and other non-electrical techniques are covered in another clause.

When a partial discharge occurs a current pulse, with a rise time in the range of 1 ns, is produced. This pulse propagates in the dielectric medium of the stator winding, undergoing attenuation and distortion until it reaches the terminals (phase or neutral) of the stator winding. The interaction between the partial discharge pulse and the stator winding is complex and not yet completely understood. For this reason, a standard calibration technique which can be used to compare partial discharge results obtained from different machines does not exist. Calibration techniques which are used, (such as that defined in ASTM D 1868-81) are only applicable on an individual machine basis, and may yield different results depending upon the bandwidth of the detector. The calibration thus derived is unique to each machine and measuring system. The calibration may be considerably in error if the partial discharge site is located some distance from the winding terminal. See IEEE Std 1434-2000.

The partial discharge pulse incident at the terminals can be detected by a variety of means. However, in general, detection is accomplished by placing a measurement impedance device from line to ground. This device normally takes the form of a high voltage coupling capacitor between the winding and ground. No matter which detection method is employed the test is performed with the winding energized using an external power supply to raise the voltage to the appropriate level. After suitable filtering and conditioning the partial discharge pulses are displayed on an oscilloscope screen or, in some cases, are counted to provide a pulse height analysis. Meaningful analysis and pulse limits remain under development.

7.1.8.2 Test Setup

The stator winding should be isolated from any connected equipment (step up transformer, switchgear, isolated phase bus, etc.) prior to energizing. All three phases can be tested together or the phases can be separated so that, if desired, individual phases can be tested. When testing individual phases, the two phases not under test are connected to ground. There are a number of benefits to this test strategy:

— reduction of power supply requirement

— increased ease when attempting to determine the location of high partial discharge levels

— interphase stresses are established

— comparison between phases can be made

A basic schematic of the test setup is illustrated in Figure 2. Essentially the discharge detection equipment comprises a high voltage, partial discharge free coupling capacitor and a high pass filter to block the power frequency signal and associated harmonics, and an oscilloscope or other appropriate recording/display device.

Copyright © 2005 IEEE. All rights reserved.

Copyright The Institute of Electrical and Electronics Engineers, Inc.
Provided by IHS under license with IEEE
No reproduction or networking permitted without license from IHS
Not for Resale

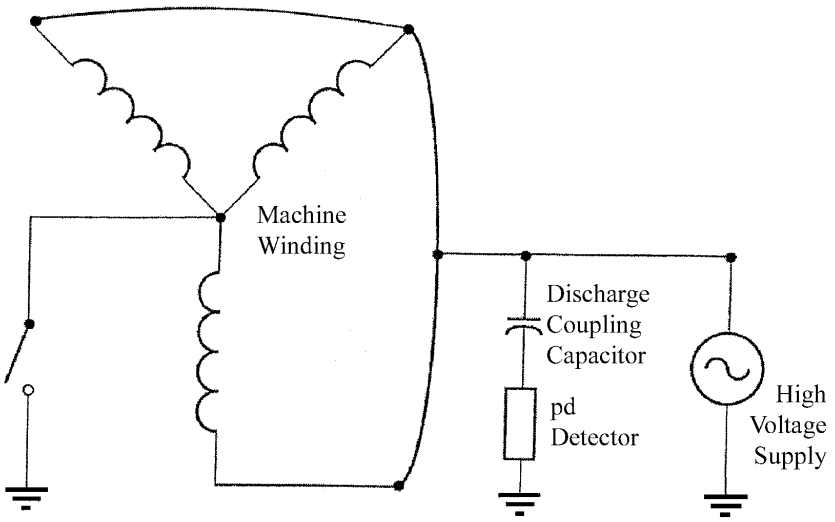

Figure 2—Partial discharge analysis test setup diagram

The high voltage power supply should be capable of raising the winding to at least its normal line-to-ground voltage. In addition, the power supply should be partial discharge free up to its maximum voltage. Various power supply options are available to fulfill this function. In general, to energize the stator winding of large machine requires a test set with a capacity in the range of 25–150 kVA. An alternative means of energizing the winding is to backfeed the neutral grounding transformer with a variable autotransformer. In this case, one should ensure that the neutral grounding transformer is partial discharge free.

Further options include the use of resonant power supplies (series or parallel) in which the resonant circuit formed by the power supply and the stator winding is tuned to maximize the Q factor. Consequently, the power supply is effectively only supplying the losses of the winding. The advantage of this approach is that the power supply is very much reduced in physical size compared to a conventional transformer which is also supplying the charging current.

Very low frequency (VLF) power supplies, which commonly operate in the frequency range 0.01–1 Hz, can also be used. Again the main advantage of this type of excitation is that because of the reduced charging current, the VLF supply can be made physically small. However, there are possible difficulties introduced when attempting to directly correlate partial discharge measurements at VLF with power frequency derived data.

The high voltage coupling capacitor should be rated according to the nominal line-to-ground voltage of the winding to be tested. In practice, capacitance values from 1.0 nF to 0.1 μF are typically used depending on the frequency characteristics of the measuring system.

Normally capacitors with a voltage rating of 25 kV and above are used. The capacitor should be partial discharge free at the rated voltage of the capacitor.

Both narrow-band and wide-band measuring systems are in current use. The mid-band frequencies and bandwidths are not standardized and their selection is at the discretion of the user. No ideal frequency characteristic exists and, in general, the following comments apply:

Copyright © 2005 IEEE. All rights reserved.
Copyright The Institute of Electrical and Electronics Engineers, Inc.
Provided by IHS under license with IEEE
No reproduction or networking permitted without license from IHS
Not for Resale

— narrow-band systems with low center frequencies (f_o = 10 kHz) have the ability to detect partial discharge activity throughout most of the winding but they suffer from significant superposition errors.
— wide-band systems with bandwidths in the range of 100–500 kHz, for example, will have lower superposition errors but will suffer from integration errors for partial discharge pulses coming from parts of the winding remote from the terminal.

Whichever frequency characteristic is chosen, it will be a compromise and it is essential that when repeat measurements are made, the same measuring system (or one with identical frequency characteristics) be used, otherwise it will not be possible to compare measurements.

The high voltage connections should be designed to avoid any problems due to corona on the connecting leads. Where necessary, steps should be taken to minimize or eliminate spurious corona by the use of stress grading compounds, e.g. at the high voltage connections.

7.1.8.3 Procedure

Having ensured that the measurement equipment, power supply and high voltage connections are partial discharge free, the test voltage is raised until partial discharge pulses are observed on the display device.

Note that in some cases, where agreed, a conditioning period at high voltage may be required. Such condition recognizes the time-dependent behavior of partial discharge. The voltage at which this phenomenon occurs is known as the discharge inception voltage (DIV). This value should be recorded. Subsequently, the voltage is raised to the full line-to-ground potential, or the prescribed maximum voltage for the test. At this voltage the peak magnitudes of the positive and negative partial discharge pulses are recorded. For the purposes of these measurements the power frequency voltage cycle should be superimposed on the display. At the discretion of the user, the peak partial discharge magnitudes of both polarities can be recorded at other voltage levels.

The voltage is then decreased until the partial discharge pulses extinguish; this is known as the discharge extinction voltage (DEV). Normally the DEV is lower than the DIV. The voltage is then decreased to zero. The test is repeated on the other phases of the winding as required. In some cases a series of discrete DIV and DEV levels will be observed for pulses of different magnitudes. Where pulse counters or pulse height analyzers are used, a record of the repetition rate and magnitude of the partial discharges is obtained.

7.1.8.4 Interpretation and analysis

As a general rule, the value of partial discharge testing is greatly enhanced when the tests are performed periodically on the machine, preferably from the new condition. In this way, gradual deterioration of the insulation, slot support and stress control systems can be observed as a function of time. Interpretation is also facilitated with the availability of reference data obtained using this strategy.

Because of the difficulties associated with partial discharge pulse propagation, described above, interpretation of partial discharge data is not simple. As a result, there are no consensus standards based on DIV, DEV or maximum partial discharge magnitude at rated voltage. Consequently, considerable experience is often required to properly interpret partial discharge data. The limited criteria which do exist are generally empirically based. Partial discharge levels, and implications thereof, can be expected to vary considerably between different insulation systems and are also affected by the adequacy of the end grading and by environmental factors. Where the machine is hydrogen cooled, partial discharge levels may change substantially depending upon the gas pressure.

As stated above, insulation system condition is extremely difficult to assess based on measurements of partial discharge magnitudes alone. This is not only because of differences in partial discharge behavior as a function of insulation material, but also the consequences of partial discharge on a particular insulation

Copyright © 2005 IEEE. All rights reserved.

Copyright The Institute of Electrical and Electronics Engineers, Inc.
Provided by IHS under license with IEEE
No reproduction or networking permitted without license from IHS
Not for Resale

system. For example, relatively high partial discharge levels may be tolerable on an asphaltic insulation but not on a modern thermoset material. Further, the bandwidth of the partial discharge detector used and the attenuation characteristics of the stator winding under test will fundamentally affect measured partial discharge magnitudes. However, by performing partial discharge tests in a trending mode, using the same measurement equipment, higher than normal partial discharge magnitudes may be identified and further appropriate action taken, if deemed necessary.

Further information on the nature of the deterioration mechanisms can be obtained from distribution of positive and negative partial discharges with respect to the power frequency cycle. An equal distribution of partial discharge in the positive and negative half cycles is an indication that partial discharge is occurring in voids in the groundwall insulation. As this condition can only be rectified by rewinding, normal practice is to continue monitoring the phenomenon and to determine whether a potentially dangerous condition exists or is developing. When high levels are observed, often normal practice is to increase the frequency of testing to determine if there is an increasing trend in magnitudes.

In cases where there is a predominance of positive partial discharge activity (exemplified by at least a 2:1 ratio of magnitudes) this is interpreted as indicative of partial discharge occurring on the surface of the stator bar or coil. A potential cause is slot discharge due to a deteriorated semiconductive coating which can be due to abrasion associated with loosening of the winding or the slot support system or electrochemical erosion of the semiconductor armor. Alternatively, endwinding discharge due to oil and dust contamination or deterioration of the interface between the semiconductor and stress grading materials can produce very similar partial discharge phenomena. Differentiation between these two phenomena is difficult to perform using partial discharge data alone. Consequently, complementary techniques to isolate the problem, such as corona probing or visual inspection, are recommended.

A preponderance of negative partial discharge activity normally implies that the discharge is occurring at or very close to the copper conductors of the winding. Very often this behavior indicates that the bonding between the groundwall insulation and conductor stack is deteriorating. Again, because the problem can only be rectified by replacement or rewinding, normal practice is similar to that noted for partial discharge on the groundwall insulation.

7.1.9 Stator winding corona probe test

This procedure is used to electromagnetically probe individual stator slots while the machine is stationary and energized to the rated ac voltage from an external voltage source. This test detects partial discharge internal to the coil groundwall and between the groundwall and the core.

7.1.9.1 Discussion

By virtue of the use of a local probe the test is useful in locating the source of partial discharge in an axial and circumferential position. The test is most commonly performed on hydro machines and can be performed with the rotor in or out. If the rotor is in, it must be possible to get the probe head between the poles and through fan assemblies to locate it over a stator slot.

It may be preferable to energize the winding for about one-hour before testing commences. This allows the instrument reading to stabilize.

The probe is more sensitive to the coil closest to the air gap (i.e. front coil).

The probe detector circuit is usually tuned to 5 MHz; this frequency provides adequate selectivity.

Measurements can be made with the whole winding energized, or just one phase. Readings are easier to take with the whole winding energized; this usually requires a powerful test supply with a lot of reactive compensation, but avoids having to split up the winding.

Copyright © 2005 IEEE. All rights reserved.
Copyright The Institute of Electrical and Electronics Engineers, Inc.
Provided by IHS under license with IEEE
No reproduction or networking permitted without license from IHS Not for Resale

The same type of instrument should be used for each test on the same machine. Trends are as important as absolute readings.

During this test the whole winding is raised to the applied test voltage. This produces a different voltage distribution than occurs under operating conditions, where voltage gradients occur between line and neutral.

7.1.9.2 Safety

The probe operator should use properly rated rubber gloves and should maintain adequate distance from the end turns at all times. The probe should only be placed against the stator iron, never on the end turn insulation.

7.1.9.3 Procedure

The winding diagram should be used to mark the slot numbers so the individual coils can be identified.

The whole winding, or one phase, is energized to the rated phase to ground operating voltage, and the corona probe is inserted into the air gap to bridge a slot about eight centimeters from the end of the slot as shown in Figure 3. The peak meter reading is recorded. The corona probe can be inserted at either end of the winding. The recorded results are compared to previous results. Any high readings or major change in readings should be investigated. Readings meriting further investigation for various insulation systems will be found in IEEE Std 1434-2000.

These tests are normally repeated to coincide with major inspections of the equipment. If the data show abnormalities in the results, more frequent testing may be required. On the other hand, if the tests are satisfactory, more lengthy periods between tests may be indicated. As a machine approaches the end of its useful life, deterioration may progress more swiftly and it should be then tested on a more frequent basis.

Copyright © 2005 IEEE. All rights reserved.

Copyright The Institute of Electrical and Electronics Engineers, Inc.
Provided by IHS under license with IEEE
No reproduction or networking permitted without license from IHS
Not for Resale

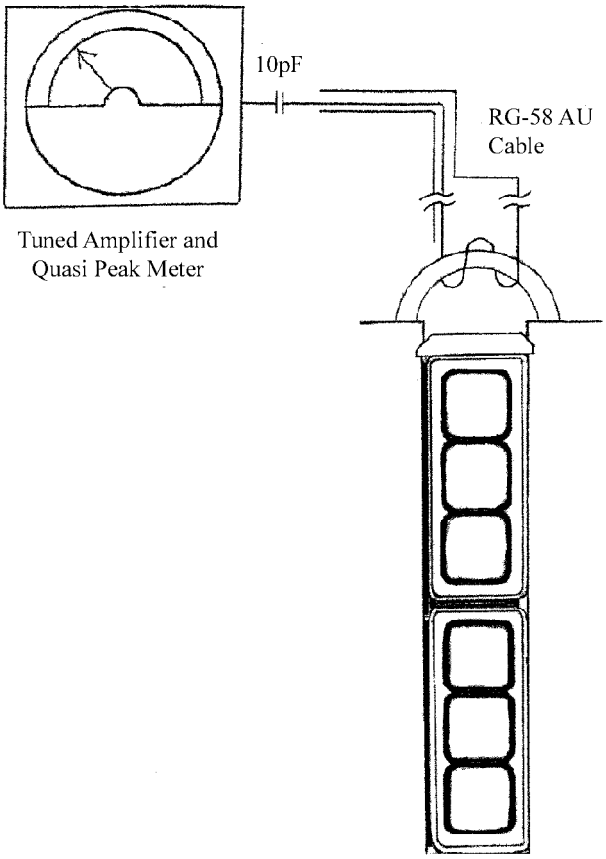

Figure 3—Corona probe test connection diagram

Some non-pulse type or glow discharges that were not detected with the corona probe may be visible using other methods. Three other methods for detection and location of partial discharge in end-windings are often used. With voltage applied to the winding, in total darkness partial discharge can sometimes be seen visibly. This is often referred to as a blackout test. Also with voltage applied to the winding, a corona sensitive camera can be used to locate corona. Corona sensitive cameras are designed specifically to show visible indications of the ultra-violet and near ultra-violet output of partial discharge. With voltage applied, a directional ultrasonic or audio detector can also be used to locate areas of partial discharge.

7.1.10 Stator winding conductor resistance test

The following subclause pertains to precise resistance measurements of conductors whose normal resistance is known to be 10 ohms or less.

7.1.10.1 Discussion

Precision resistance values of greater than 10 ohms are normally not measured in the course of field testing on power apparatus and, therefore, such testing is not covered within the scope of this document. Typical of the conductors which would be tested using techniques described, are machine stator and field windings.

It is always desirable to determine the presence of any high resistance joints, corrosion, fractures or dimensional reductions in the cross sectional area of conductors. With time in service, the mechanical

Copyright © 2005 IEEE. All rights reserved.
Copyright The Institute of Electrical and Electronics Engineers, Inc.
Provided by IHS under license with IEEE
No reproduction or networking permitted without license from IHS
Not for Resale

vibration of operation can lead to failure or partial failure of conductors. Vibration of a joint can apply high cyclic forces at a point of high mechanical stress concentration or to an area where the conductor has abrupt changes in hardness. These are conditions which may lead to conductor fracture. Insulating blocks can also vibrate and wear away part of the cross section of copper conductors. Only the precision of resistance measurement offered by a Kelvin bridge or microhmmeter will allow the detection of the subtle changes in conductor resistance caused by these types of damage. These instruments incorporate a measurement range which span the resistance values offered by most copper windings and conductors used in electric power apparatus. Kelvin bridges and microhmmeters measure to 5 significant digits and are accurate to within 0.25%.

7.1.10.2 Test intervals

Resistance measurements of high current carrying conductors are usually made during major maintenance outages and at any time when a suspected high resistance circuit exists.

7.1.10.3 Procedure

Connection of both the bridge and the micro-ohmmeter to the circuit under test are basically the same. Using the instruction manual as a guide, the four leads should be connected to the circuit being measured. Two leads, one potential and one current (as described in the instruction manual) should be connected to each end of the circuit to be measured. Care should be taken to assure good contact of all lead connections as well as ensuring that all test leads are the same, i.e., length, gauge, and material.

Care should be taken to connect the current leads outside of the voltage leads at the points of connection to the test circuit (Figure 4).

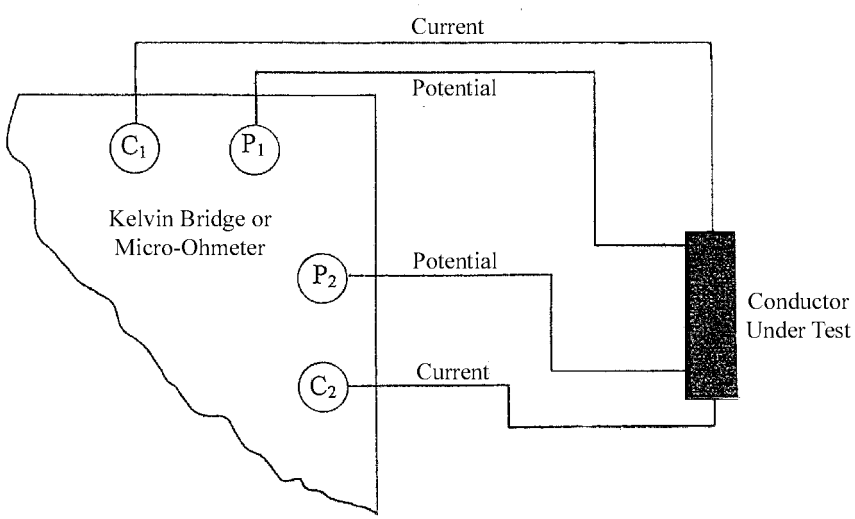

Figure 4—Kelvin bridge test diagram

When using a bridge, it should be balanced, starting with the most significant digit setting followed by the next most significant etc., until the bridge null meter indicates zero. The measured conductor resistance is read directly from the bridge settings. When using the micro-ohmmeter, only a range selection needs to be made and the measured reading is displayed directly on the instrument. After obtaining the measured resistance (R_t), from the bridge settings or the micro-ohmmeter, that value has to be corrected for temperature. For copper conductors, this correction is done by using the temperature of the circuit under test

Copyright © 2005 IEEE. All rights reserved.

Copyright The Institute of Electrical and Electronics Engineers, Inc.
Provided by IHS under license with IEEE
No reproduction or networking permitted without license from IHS
Not for Resale

(T_t), the temperature of the circuit at standard conditions, (usually 75 °C) and applying the following formula:

$$R_t\,(234.5 + 75)/(234.5 + T_t) = R_{75}$$

This corrected resistance value can now be compared with previous values that were corrected to the same standard conditions.

7.1.10.4 Interpretation

The interpretation of results is dependent on the type of conductor being measured. For example, some conductors consist of several parallel paths of stranded conductors and detecting a problem with only small percentage of strands may be beyond the resolution of the bridge or micro-ohmmeter. If several strands are broken or there is an inadequate internal connection, the Kelvin bridge or micro-ohmmeter may detect the resulting higher resistance circuit. A 2% variance from expected is usually an indication of an abnormal stator winding circuit. It should be noted that with only a 2% deviation from expected being a significant indication, the proper calibration of the instrument and proper measurement techniques are critical.

7.1.11 Stator winding temperature detector (RTD/TC) insulation test

7.1.11.1 Discussion

Many types of temperature detectors are used throughout the machine and exciter assembly. The two most common types of detectors are Resistance Temperature Detectors (RTDs) and thermocouples (TCs). These devices are typically grounded in their measuring instrumentation; however, there are cases where temperature measuring devices are intentionally grounded at the sensor or at the terminal board. Consult the original equipment manufacturer and instruction documents prior to measuring detector insulation resistance to determine if detectors are intentionally grounded. If the detector is intentionally grounded, the insulation resistance may not be testable unless the ground can be disconnected.

Common locations of temperature measuring devices in machine and exciter equipment include:

- between coils in a slot to measure coil temperature
- mounted in cooling gas flow to measure hot or cold gas (sometimes utilizing a thermowell)
- mounted in or on liquid cooling piping or manifolds to measure cold or hot temperatures (thermowells are often utilized to put the detector inside piping)
- mounted inside bearing metal or in the bearing oil sump or oil drain to measure bearing temperature

Detector insulation resistance is particularly important on bearing metal detectors because grounding a bearing at the exciter or exciter end of the machine can allow shaft currents to flow which can damage the bearing. Detector insulation resistance in other applications is important to prevent ground loops which can cause erroneous readings in the detectors or damage the components in contact with the sensor.

To understand the test procedures and apply them safely, the user should understand the basic principles of operation of the device. Procedures for testing insulation resistance are outlined in 7.1.3. For further information check reference material, or contact the manufacturer.

7.1.11.2 Test intervals

The insulation resistance of temperature measuring devices should be verified when new devices are installed, or when other insulation resistance checks are made to the machine windings. Insulation of detectors associated with the winding should be verified after high voltage tests, particularly if a flashover was experienced.

Copyright © 2005 IEEE. All rights reserved.
Copyright The Institute of Electrical and Electronics Engineers, Inc.
Provided by IHS under license with IEEE
No reproduction or networking permitted without license from IHS
Not for Resale

7.1.11.3 Precautions

Detector elements and junctions are not intended to pass high currents. If the detector wiring insulation grounds during the test, the element can be damaged if a high current surge is passed from the voltage source, through the element to the ground. For this reason lead wires should be tied together for this test. If a ground is found, the detector should be verified per the detector continuity/calibration test procedure below.

7.1.11.4 Procedure

Detector insulation resistance should be measured using the stator winding insulation resistance test procedure found in 7.1.3. Consult the original equipment manufacturer for the recommended test voltage level.

7.1.11.5 Interpretation of results

Insulation resistance less than 1 megohm for any detector which is not intentionally grounded is not acceptable. This is a pass/fail test. Polarization index is not particularly meaningful in this test.

7.1.12 Stator winding RTD/TC continuity/calibration test

7.1.12.1 Discussion

Many types of temperature detectors are used throughout the machine and exciter assembly. The two most common types of detectors are resistance temperature detectors (RTDs) and thermocouples (TCs). Common locations of temperature measuring devices in machine and exciter equipment include:

- between coils in a slot to measure coil temperature
- mounted in cooling gas flow to measure hot or cold gas (sometimes utilizing a thermowell)
- mounted in or on cooling water piping or manifolds to measure cold or hot water temperatures (thermowells are often utilized to put the detector inside piping)
- mounted inside bearing metal or in the bearing oil sump or oil drain to measure bearing temperature

The purpose of this procedure is to give simple checks of RTDs and thermocouples. For true calibration to a standard, the user should utilize calibration standards and certified calibration laboratories.

To understand the test procedures and apply them safely, the user should understand the basic principles of operation of the device. Simplified descriptions are given below. For further information consult reference material, or contact the manufacturer.

RTDs utilize a resistive element which changes resistance linearly with temperature. Two leads connect to the resistive element, and a third wire is connected to one side of the element for use in resistive lead compensation. Four wire RTDs are also available for lead compensation by separation of the voltage and current circuits.

Thermocouples utilize a junction of dissimilar metals which generates a constant millivolt signal proportional to the temperature of the junction. Several common types are available and used in electrical equipment.

7.1.12.2 Test intervals

Detectors can change calibration due to contamination or deterioration of elements. Exposure of elements to high temperatures, high currents, or a contaminating atmosphere can lead to element deterioration. Calibration and Continuity checks may be called for in various situations as follows:

Copyright © 2005 IEEE. All rights reserved.

Copyright The Institute of Electrical and Electronics Engineers, Inc.
Provided by IHS under license with IEEE
No reproduction or networking permitted without license from IHS
Not for Resale

— at completion of sensor installation
— part of a complete inspection or overhaul on a regular basis
— after the sensor has been subjected to forces or temperatures outside the normal range
— if questionable readings have been reported from a detector
— after completion of high voltage testing of windings where a detector may be in close contact with the winding

7.1.12.3 Precautions

To protect the elements from damage, care should be taken not to pass high currents through detector elements.

7.1.12.4 Procedure

Continuity of detectors can be verified with a low voltage ohmmeter. Calibration of detectors can be simply checked as follows:

— Scan elements off-line to verify that the measured temperatures are in the expected range. Note that temperatures will vary by location.
— Place a calibrated detector alongside the detector to be checked and read from a separate calibrated reference instrument. Compare readings from the reference detector and the detector under test. If possible heat the detectors using a heat gun to make a reading at a second temperature point.
— Read the detector under test using normal instrumentation as well as with a separate calibrated reference instrument, then replace the detector under test with a calibrated detector. Read the calibrated detector with a separate calibrated instrument. Compare calibrated readings with readings from the detector under test.

Calibration by removing the detector from its installed location and placing into a reference temperature such as a calibrated furnace or ice bath is not always practical, and in the case of a thermocouple is not recommended. The output of a contaminated or deteriorated thermocouple will not be determined solely by the temperature of the heated junction, and of the reference junction, but also by the temperature gradient between the hot and cold end and the pattern of contamination and deterioration in the temperature gradient zone; therefore, checking in a location other than the installed position can cause readings which do not agree with the readings obtained in the installed location.

Visually inspect the general condition of the thermocouple, wiring and terminal boards for physical and mechanical fitness. For units installed with thermowells, check thread locking devices, linkages, cleanliness, etc.

7.1.12.5 Procedure for checking RTD with a Kelvin bridge or digital low resistance ohmmeter

There are common instruments for connecting the three leads of an RTD and measuring the temperature. If such an instrument is not available, the resistances of the RTD element and lead wires can be measured using a Kelvin bridge or a digital low resistance ohmmeter and converted to a temperature. The following procedure describes this method of measurement. RTD resistances should be measured to the nearest milliohm.

— Connect the test instrument to the leads across the element of the RTD, and measure the resistance.
— Connect the test instrument to the compensating leads of the RTD, and measure the resistance.
— Subtract the resistance of the compensating leads from the resistance of the leads across the element. This is the element resistance Re. Calculate the temperature using the appropriate formula which applies to the type of RTD being tested for example:

Copyright © 2005 IEEE. All rights reserved.
Copyright The Institute of Electrical and Electronics Engineers, Inc.
Provided by IHS under license with IEEE
No reproduction or networking permitted without license from IHS Not for Resale

a) Copper RTDs; 10 ohms at 25 C

Temperature C = $[(R_e \times 259.5)/10] - 234.5$

b) Platinum RTDs: 100 ohms at 0 C

Temperature C = $(R_e \times 2.523) - 252.3$

7.1.12.6 Procedure for reading thermocouples

The easiest way to read the temperature indicated by a thermocouple is to connect to a proper direct reading device. The device should be calibrated for reading the type of thermocouple being measured. Thermocouple types commonly used in machines and exciters are shown in Table 3.

Table 3—Common types of thermocouples

ANSI Code	(+) Lead	(-) Lead	Thermocouple	Magnetic Lead
J	Iron Fe	Constantan Cu-Ni	(+) White (-) Brown (Red)	Iron (+)
K	Chromel Ni-Al	Alumel Ni-Al	(+) Yellow (-) Brown (Red)	Alumel (-)
T	Copper Cu	Constantan Cu-Ni	(+) Blue (-) Brown (Red)	—
E	Chromel Ni-Cr	Constantan Cu-Ni	(+) Purple (-) Brown (Red)	—

The signal voltage generated by dissimilar metals which are joined cannot be measured directly using a common millivolt meter and interpreted to determine temperature. The joints of the thermocouple's wires with the voltmeter will cause separate junctions which will cause changes in the overall signal of the thermocouple circuit. The signal will be proportional to the difference between the temperatures at the junctions created. If the temperature at the voltmeter junction is known, then this can be accounted for and the temperature determined. To account for this, a second thermocouple known as a reference junction is placed in an ice bath. Leads of similar metals from the two junctions are connected to an isothermal terminal block and connected to a voltmeter. With this method, the measured voltage can be used to determine the temperature at the thermocouple element. Direct reading devices commonly available today utilize an internal reference also known as an “electronic ice bath.”

7.1.12.7 Interpretation of results

Detectors which do not have continuous elements, should be replaced at the earliest opportunity. In cases where replacement is not an option (detectors embedded between coils in a stator winding), the readings from the detector should be discounted.

Copyright © 2005 IEEE. All rights reserved.

Copyright The Institute of Electrical and Electronics Engineers, Inc.
Provided by IHS under license with IEEE
No reproduction or networking permitted without license from IHS
Not for Resale

For RTDs the following acceptance criteria may be used to help determine if an elements should be replaced. The criteria may be made less restrictive depending on the type of test:

a) Copper 10 ohm RTDs ±0.02 ohms / ±0.6 °C

b) Platinum 100 ohm RTDs ±0.5 ohms / ±1.3 °C

For thermocouples, all recorded temperatures should be within ±1.5 °C. If a thermocouple is outside this range, it should be replaced if possible. Prior to rejecting the thermocouple, a further check should be made of the thermocouple leads. Thermocouple lead wire is special wire which is intended to be the same metal as the thermocouple itself. Sometimes splices in the wire contain dissimilar metals which create junctions. If the junctions are at the same temperature, and in good condition, then there is no problem, but if one of these junctions deteriorates, the overall circuit can be compromised. Verify the junctions at splices by applying heat with a heat gun. If application of heat at a splice does cause the indication from a thermocouple to change, then the splice should be addressed, and the thermocouple rechecked.

For large turbine generators, if several embedded RTDs are found open, it may be a sign of general wedge looseness, and bar vibration.

7.1.13 Stator winding tube-to-tube insulation test

Some large turbine generator stator coils are designed with ventilating tubes. This procedure describes the method of evaluating the condition of the insulation between tubes.

7.1.13.1 Discussion

This test is performed to detect an abnormally high or low resistance between the ventilating tubes on hydrogen inner-cooled coils. Shorts between the tubes may lead to damage from circulating currents. High resistance can cause breakdowns to the copper winding during high voltage dc testing.

7.1.13.2 Procedure

The resistance between all of the ventilating tubes should be measured with a low voltage ohmmeter.

All resistance values obtained should be recorded on a form identifying the location and readings.

7.1.13.3 Interpreting And Reporting The Data

Acceptable values: The acceptable resistance value should be obtained from the original equipment manufacturer. Commonly values between 100 to 100 000 ohms are acceptable.

Corrective action: High resistance values should be corrected before application of any high voltage test. Shorts between tubes should be located and repaired if accessible. Low resistance values less than 100 ohms which have been found and cannot be repaired, should be evaluated by the original equipment manufacturer.

7.1.14 Stator winding tube to copper insulation test

Some large turbine generator stator coils are designed with ventilating tubes. A resistor is frequently connected between the tubes and the adjacent copper conductors to keep the potential of the tubes at the same level as the conductors, so that if a transient (such as a flashover) occurs during the test, the tube to copper insulation is not overstressed. This procedure is to detect an abnormally high or low resistance between the ventilating tubes and the copper of the winding. This test will confirm if the resistor is present and in good condition.

Copyright © 2005 IEEE. All rights reserved.
Copyright The Institute of Electrical and Electronics Engineers, Inc.
Provided by IHS under license with IEEE
No reproduction or networking permitted without license from IHS Not for Resale

There are various design concepts used to address equalizing tube and conductor potential. Some of these concepts do not utilize resistors. Consult the original equipment manufacturer to determine what steps should be taken to assure the proper method is used to protect the tube to copper insulation in the event of a flashover or other transient during high voltage testing.

7.1.14.1 Discussion

Low resistance or shorting may lead to damage from circulating currents if multiple shorts exist.

High resistance can lead to insulation breakdown due to excessive dc voltage being applied across the tube to winding insulation during high voltage testing, both in applying the voltage and in discharging. The test should be made early during a maintenance outage so that sufficient time is available to perform necessary repairs.

7.1.14.2 Procedure

During testing the tube-to-copper insulation, resistance should be determined by using a low voltage ohmmeter. The test should be made between each coil tube and the winding. The values should be recorded on an appropriate form which identifies the coil and tube location.

On partial or complete winding replacement, prior to connecting the resistive device between each tube and the winding, the winding should be tested with a 250 volt megohmmeter. Acceptance values are one megohm or greater. After the tube stack(s) have been connected to the winding, the tube insulation test may be performed.

7.1.14.3 Evaluation

The acceptance resistance value should be specified by the original equipment manufacturer.

Note: Large voltage differences between ventilation tubes and the winding should be prevented. Therefore, these resistive devices need to be intact or temporary connections should be in place before proceeding with dc high voltage testing.

All ventilation tubes with resistance values less than the resistance value for the tube directly connected to the resistor should be repaired if accessible. An engineering recommendation should be solicited from the manufacturer if a short circuit cannot be readily cleared.

7.1.15 Stator winding group transposition test

Group transposition tests are performed for the location of either broken strands or other sources of high resistance in winding connections consisting of multiple parallel groups.

7.1.15.1 Discussion

Group transpositions are used to externally change the location of groups of strands within individual coils in order to equalize circulating current heating.

The existence of broken strand or mechanically weakened connections will cause an increase in operating temperature of the affected group of coils within a winding. Therefore a method of detection is required to correct the incidence during a maintenance period.

By passing current through the entire phase group of a winding and probing with leads attached to a voltmeter, individual voltage drops for each transposed group can be obtained. The resultant calculated

Copyright © 2005 IEEE. All rights reserved.

Copyright The Institute of Electrical and Electronics Engineers, Inc.
Provided by IHS under license with IEEE
No reproduction or networking permitted without license from IHS
Not for Resale

resistances can be compared to prior data, similar groups within the same winding, or to the calculated resistances of the groups from design data.

Similar probing within a transposed group can isolate the problem area. The source of high resistance can be located and identified in this fashion.

7.1.15.2 Procedure

The phase under test should be connected to a dc current source capable of supplying at least one ampere of current for each transposed group in parallel. The most central connection of the coil group undergoing test should be located. If required, the insulation may be removed for probing access to the connection.

From the outermost transposition group, the voltage drop to each of the group phase connections should be measured. The readings should be balanced within 2% of each other. If they are not balanced, another group should be used for the "base point". The voltage drop from the "base point" to each of the other group transpositions should be measured. Complete each phase and repeat on the others. The test should follow the sequence of the transposition and the same sequence should be followed on each coil group.

If the current is maintained at one ampere per transposition group then the voltage reading is a direct reading of the resistance. All readings should be recorded and resistance values plotted.

7.1.15.3 Interpretation of results

When the results of the tests are plotted, they form a sinusoidal-type waveshape. Values not conforming to this pattern are easily identified. Values exceeding 100 microhms from the expected values should be investigated.

7.1.15.4 Test equipment

A stable dc power supply is required which should be capable of supplying at least 50 A. A high internal resistance dc voltmeter is also required which is capable of reading in the microvolt range.

7.1.16 Stator winding modal analysis

Stator windings are subjected to strong electromagnetic forces while in operation. These forces are nearly proportional to the square of the current passing through the coils. For this reason, large machines and machines which may have to withstand fault conditions have substantial stator winding restraint systems. These systems restrain excessive coil movement caused by electromagnetic forces, allow for differential thermal expansion between the winding and the core and tune the natural frequency of the winding end turns away from harmonics of line frequency.

Modal analysis is the term used to describe the modeling of patterns of vibration, or mode shapes for a given structure. If a structure has a natural frequency of vibration at or near its driving frequency of vibration, this frequency can potentially be excited during operation, resulting in wear and/or cyclic fatigue of the components. In order to reduce the effects of vibration, structural analysis of equipment developed during the design phase can be used to predict the mode shapes and make structural modifications as required.

Modal testing is a technique by which actual structural responses relative to a measured excitation are recorded and used to create a modal model of the structural response. The measured excitation may take the form of a single impact, a harmonic shaker, or a reference signal representing the operational excitation. Mode shapes based on this latter excitation are sometimes referred to as running or operating shapes.

Applications of modal analysis and testing to electric machines are varied, and include maintenance evaluations. One common application is the performance of impact testing on machine stator end windings.

Copyright © 2005 IEEE. All rights reserved.
Copyright The Institute of Electrical and Electronics Engineers, Inc.
Provided by IHS under license with IEEE
No reproduction or networking permitted without license from IHS Not for Resale

In this application, the operating excitation is consistent with the shape and frequency of the rotating field, i.e., 2-lobe or elliptical at twice the running speed for 2-pole machines, 4-lobe at four times the running speed for 4-pole machines. The existence of excitable natural frequencies in the range of concern can result in increased deterioration of insulating materials and possible in-service failures. The use of modal testing allows rapid assessment of the condition of the end winding and diagnosis of what, if any, maintenance action is required. A full modal test and analysis can usually be completed within one day; modifications to shift the modes of concern into the desired range can significantly increase the expected life of the winding, and therefore the useful life of the machine.

Other areas where this technique has been extremely useful are in the diagnosis and resolution of issues related to frame and foundation vibration. The technique has been successfully utilized to resolve many and varied issues for operating electric machines.

7.1.17 Stator winding/bushing dielectric loss test

7.1.17.1 Discussion

The power factor test of the machine bushing is actually a measurement of its dielectric loss. The dielectric loss in any insulation system is the power dissipated by the insulation when an ac voltage is applied. (All electrical insulation has a measurable quantity of dielectric loss, regardless of condition. Good insulation usually has a very low loss.) Data is analyzed on the basis of relative magnitudes of leakage current and watts dissipated for similar bushings, or for periodic tests on the same bushing. The power factor is a dimensionless ratio, expressed in percent, of the resistive current to total current flowing through the insulation. The test can help determine the overall integrity of a service-aged bushing as part of scheduled overhaul and inspection activities. It can locate cracks in the porcelain and/or degradation of the insulation inside the bushing. This test is usually conducted in conjunction with a power factor test of the stator windings.

In this test, the bushing is treated as a capacitor in which the dielectric is the insulation system bounded by two electrodes: the center conductor of the bushing and the outer porcelain or similar surface. Contamination of the insulation by moisture or other chemical substances may cause losses to be higher than normal. Periodic tests performed during the service life of the machine can indicate that either the bushing is aging normally or deteriorating rapidly.

The bushings can also suffer a loss of dielectric integrity, from cracking of the porcelain or similar elements, which can cause a hydrogen leak. If dielectric strength is reduced enough to permit electrical flashover, arcing can destroy the bushing, and the immediate ignition of hydrogen can occur if present. The fault produced by a bushing failure can extend to other bushings which then results in mechanical forces which may cause additional damage throughout the machine and the isophase system.

7.1.17.2 Test interval

Power factor/dielectric loss tests are generally made to test the quality of a service-aged bushing, as part of an overall power factor test of the machine during scheduled overhaul and inspection activities.

7.1.17.3 Test equipment

The performance of a power factor test requires an ac high voltage power supply and a means of measuring the dielectric losses in the bushing. The power supply should be capable of energizing the bushing to at least 10 kV. Dielectric loss can be determined by a bridge measuring technique, such as the Schering bridge or transformer ratio-arm bridge. An important feature of testing installed equipment is that the bushing flange is grounded to the machine frame; therefore, the measuring instrument should be capable of working with equipment that cannot be isolated from ground. Portable test systems that include bridge, power supply and

Copyright © 2005 IEEE. All rights reserved.

Copyright The Institute of Electrical and Electronics Engineers, Inc.
Provided by IHS under license with IEEE
No reproduction or networking permitted without license from IHS
Not for Resale

a reference impedance in one enclosure are available from a number of different test equipment manufacturers. These instruments vary in physical size, circuitry, test voltage and operating procedures.

7.1.17.4 Procedure

The power factor test of the machine bushings is usually preceded by the power factor test of the machine stator windings. The machine should be grounded, but otherwise isolated electrically from the station. This test is usually only conducted during a scheduled outage. On some machines, this test is not feasible because the bushings are inaccessible without major dismantling.

Dielectric loss tests can be performed at any voltage within the normal operating range of the machine under test. However, it may not be practical to perform a loss test at rated voltage on high voltage equipment in the field. To keep power supply requirements to a minimum, the voltage in typical field test sets range from 100V to as high as 12 kV. The test voltage normally used for most machine bushings is 10 kV at 60 Hz.

Unlike transformer bushings, machine bushings usually do not have a test tap or potential tap for power factor tests. When there is no test tap, the test voltage is applied to the bushing by wrapping a collar around the accessible portions of the porcelain. This collar may be made of conducting rubber or metallic foil or braid. In either case, reasonable care should be taken that the collar is wrapped tightly around the bushing.

Figure 5 is a typical machine bushing with three current transformers installed. Note that most machine bushings are on the bottom of the machine. The high voltage test cable is attached to the collar and the low voltage or ground cable is attached to the center electrode of the bushing. The collar is energized at 10 kV. (Whenever the physical space between the collar and ground is very small, the test voltage may have to be reduced.) This is called a “hot collar” test.

Copyright © 2005 IEEE. All rights reserved.
Copyright The Institute of Electrical and Electronics Engineers, Inc.
Provided by IHS under license with IEEE
No reproduction or networking permitted without license from IHS
Not for Resale

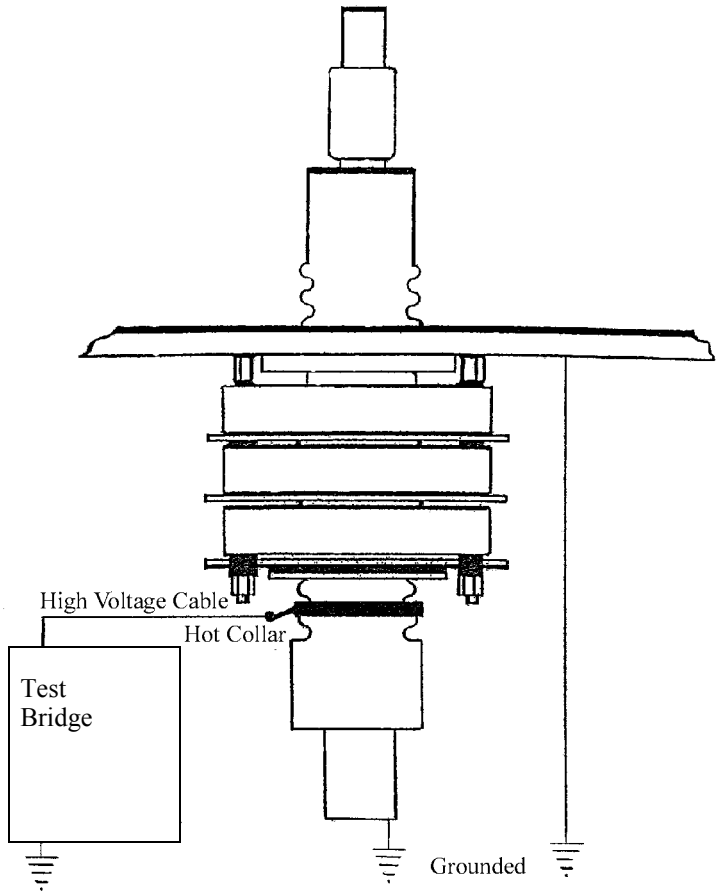

Figure 5—Hot Collar Test Connection

Each bushing is tested separately. The neutral bushings should not be overlooked. In the event of a fault, the neutral bushings can see the line to ground voltage and the failure of a neutral bushing can partially defeat the fault sensing provisions in the neutral grounding system. If that occurs, the operation of protective relays may be delayed, resulting in greater damage to the machine.

The hot-collar test includes the measurement of all currents passing between this energized collar and ground. This includes dielectric loss through the bushing's insulation system and surface-leakage currents which are affected by the bushing surface conditions. The operator should follow the manufacturer's operating instructions for their specific test set. The magnitudes of leakage current and power dissipated should be recorded for each bushing.

7.1.17.5 Interpretation

Interpretation of the test results requires an analysis of the magnitudes of leakage current and real power dissipated for each bushing. Interpretation is also based on a comparison of relative magnitudes of current and power for similar bushings, or for periodic tests on the same bushing.

Copyright © 2005 IEEE. All rights reserved.

Copyright The Institute of Electrical and Electronics Engineers, Inc.
Provided by IHS under license with IEEE
No reproduction or networking permitted without license from IHS
Not for Resale

The power loss should be less than 0.1 watt at 10 kV. If the current or power loss is appreciably higher than normal, then a second test should be made after moving the collar down (or up) on the bushing. If the loss is between 0.1 watt and 0.3 watt the bushing should be examined carefully to determine whether moisture is present, and/or cracks exist in the porcelain. If the loss is above 0.3 watt, and high losses are also obtained for additional collar tests in other positions, there is evidence that a fault is distributed throughout the bushing. In this case, the bushing should be removed, disassembled and reconditioned if practical, or discarded and replaced.

Abnormally high charging current readings, compared to similar bushings or to previous tests, would indicate an increase in the capacitance due to defective porcelain or to moisture inside the bushing. Contamination on the outside of the bushing (which can be removed with denatured alcohol) will produce a similar effect.

7.2 Stator core

Evaluation procedures for the stationary, laminated core iron of rotating machinery are described below.

7.2.1 Stator core visual inspection

7.2.1.1 Discussion

Core: While the core may appear to be a large, rugged component, the many thousands of individual punchings and associated spacers and clamping devices leave many opportunities for trouble. The situation is compounded by high vibrational forces, electrical duty and sensitivity to mechanical damage. Mechanical damage usually will be obvious to inspection, but can occur in not readily detectable ways. Electrical breakdown may be easily visible on the surface, but alternatively, may be deep within the core. Looseness can also occur in areas and conditions which make observation difficult. The components should be inspected for physical damage, dust generation, local and general over-heating, displacement and looseness.

Hardware: The numerous mechanical connections in a machine result in opportunities for loose parts, sometimes in locations that are not readily accessible. All components of the frame and winding supports and instrumentation should be thoroughly inspected.

7.2.1.2 Foreign material

Foreign material is a major concern from many sources, for example: objects falling out of pockets; lost tools; magnetic objects brought into the machine by residual field magnetism; loose hardware; oil leaks and dust generation. On air cooled machines, dirt induction may occur, and on outdoor units, rain penetration. Inspection and protective procedures should at all times be thorough.

7.2.1.3 Checklist for stator core and hardware inspection

- core melting
- broken or loose laminations at tooth tips
- broken ears from laminations at building bolts or bars at the outside diameter of the core
- fretting corrosion between building bolts/bars and punchings
- evidence of clearance between building bolts/bars and punchings
- chevron appearance, or circumferential waviness in iron packs; other forms of core distortion or buckling
- non-vertical core stack on vertical machines
- broken welds between building bolts/bars and bore rings

Copyright © 2005 IEEE. All rights reserved.
Copyright The Institute of Electrical and Electronics Engineers, Inc.
Provided by IHS under license with IEEE
No reproduction or networking permitted without license from IHS Not for Resale

— mechanical damage due to foreign objects, water incursion, damage inflicted during the performance of other corrective work, damage caused by the skid plate during rotor removal, and rotor contact with core during removal

— evidence of local or general overheating from mechanical damage or lamination insulation breakdown

— broken or displaced vent fingers or laminations

— contamination by dirt, oil or other foreign material especially in radial vents

7.2.2 Stator core low energy test

The condition of the interlaminar resistance between stator punchings of a machine core is often best evaluated by means of magnetic excitation of the core. This procedure describes a method of accomplishing this using low flux densities, low power requirements, and short set-up time. The procedure has the further benefit of producing a permanent record of the condition of the interlaminar core insulation.

The principle underlying this method is that measurable currents will flow through failed or severely deteriorated interlaminar insulation when a flux of only a few percent of the rated value is induced in the core.

7.2.2.1 Discussion

A weak magnetic field is induced in the core using an excitation loop consisting of a few turns of small, low-voltage cable. The magnetic excitation field is in a circumferential pattern around the stator bore, and is to be the datum phase to which all other quantities are referenced. This excitation field induces currents to flow between laminations with weakened insulation. These resultant eddy currents due to the interlaminar insulation defects are detected using a Rogowski-type pick-up coil, which is also known as Maxwell's worm. The Rogowski-type coil is constructed from many turns of fine wire wound on a flexible, U-shaped magnetic core. The number of turns per unit length and cross-sectional area of the core are kept constant so that a calibrated output from the coil can be obtained. For this reason, during operation, the tips of the coil should be maintained uniformly close to the core iron as when calibrated.

When such a coil is placed across two core teeth the voltage induced by the fault current is approximately proportional to the line integral along its length. If the field in the core is ignored, the voltage output of the coil is proportional to the eddy current flowing in the area encompassed by the pick-up coil, the two teeth it spans, and the core behind these. Unfortunately, due to the circumferential magnetic field component resulting from the excitation coil, the output of the Rogowski-type coil cannot be used directly to indicate the condition of the core insulation. However, the eddy currents due to the faults result in fluxes which are phase shifted with respect to the reference flux. Consequently, the component of the excitation flux measured by the Rogowski-type coil can be eliminated to produce a voltage that is proportional to the axial component of the eddy current. Elimination of the excitation flux component is enabled by placing a second reference coil at another part of the core. From this second coil, one can derive the zero crossing point of the excitation voltage, at which time the output from the Rogowski-type coil is recorded.

For large machine cores, increased sensitivity can be obtained by means of a compensating coil which is fitted to the Rogowski-type coil. The function of this additional coil is, by connecting it in series with, but in phase opposition to, the Rogowski-type coil, to reduce to a low level the excitation voltage component.

For large hydromachines with splits in the stator core, this test is not commonly performed. The energy available may not be able to drive the flux across the splits.

The outputs from the Rogowski-type and reference coils are fed to a signal processing unit which performs the excitation voltage component elimination and provides an output of the axial eddy currents detected by

Copyright © 2005 IEEE. All rights reserved.

Copyright The Institute of Electrical and Electronics Engineers, Inc.
Provided by IHS under license with IEEE
No reproduction or networking permitted without license from IHS
Not for Resale

the Rogowski-type coil in milliamperes. If the stator core insulation has been damaged, relatively high current readings will result.

7.2.2.2 Test set-up and procedure

An excitation loop should be pulled through the bore and around the outside of the stator frame. One advantage of this test is that the cable used for the excitation loop is low voltage and typically about 4 mm in diameter. The wires constituting the loop should be installed along the central axis of the bore, rather than letting the wires be in contact with the stator core. The core of the machine under test is excited with a weak magnetic flux. The correct level of excitation flux will generate a single turn search coil voltage in the range of 50 millivolts per centimeter of axial core length (0.13 V/in). Consequently, the exciting coil parameters have to be calculated based upon the size of the core. Further, it is advisable to install a coil to measure the actual induced flux.

Prior to commencement of the test the stator should be inspected for any conductive material which would short the laminations together and the Rogowski-type coils should be adjusted to ride smoothly and freely on two teeth but should be prevented from wobbling or binding. Good practice should also include numbering the core teeth to provide an easy means of referencing any faults located. The reference coil is located in the bore and should be positioned so that its axis is perpendicular to the excitation field and so that it will not impede the progress of Rogowski-type coil as it is pulled along the length of the core.

Once all of these requirements have been met the Rogowski-type coil can be set over the slot and the complete slot is scanned with the current readings being observed or recorded. This procedure is repeated with each slot in turn until the entire core, or a selected portion of it has been tested. The first slot to have been scanned should be retested for verification purposes.

Generally, background noise present during the test should not result in readings greater than 50 mA. If such levels are recorded, then certain steps may be required to ameliorate their effects on the measurement. These steps include identifying the source of noise, usually a high frequency source such as an arc welder, or attempting to shield the measurement by moving the test equipment within the shielded confines of the turbine end of the machine frame. In cases where the levels of noise cannot be reduced below 75 mA, the results of the test may not be valid.

7.2.2.3 Interpretation

This test has the potential for high sensitivity, hence it can detect magnetic disturbances which may not prejudice the reliability of the stator. Consequently, interpretation of the results is not simple and there may be some difficulty in determining an appropriate level of response which warrants further investigation and/or repair. In general, responses of greater than 100 mA should be regarded as significant and should be further investigated. Apart from absolute magnitude, some indication of the location of the fault may be obtained by examination of the polarity of the Rogowski-type coil response. This phenomenon results because faults lying within the span of the Rogowski-type coil give positive responses whereas those not encompassed by the span produce negative responses.

It should be recognized that no reading will be obtained at a fault location if the electrical circuit is not completed elsewhere. Thus on new machines where the punchings may not yet be shorted to the stacking bars, serious faults may not be detected.

Note: These tests are often performed as a routine evaluation test during machine inspection outage. The tests are also performed in connection with rewinds, rewedging, core tightening, or if there is observed damage. Questionable results have been obtained on segmented cores (cores with splits) and on cores that have not been excited up to rated flux.

Copyright © 2005 IEEE. All rights reserved.
Copyright The Institute of Electrical and Electronics Engineers, Inc.
Provided by IHS under license with IEEE
No reproduction or networking permitted without license from IHS Not for Resale

7.2.3 Stator core high energy test

The condition of the interlaminar resistance between punchings of a machine stator core is often evaluated by means of magnetic excitation of the core with a loop test. Following are recommended procedures to be followed during a typical loop test of the machine stator core.

7.2.3.1 Discussion

The modern practice during loop tests is to perform a thermographic inspection of the core with infrared measuring equipment.

The simple loop test configuration shown in Figure 6 consists of driving a magnetic flux through an iron core by winding it with a multi-turn coil which is then connected to a voltage source, V_e. For hydromachines (Figure 7), the turns should be distributed around the core. When a hydromachine has separate core sections, the same number of turns should be placed on each core section. The flux density within this core is a direct relation of the voltage generated in a single turn search coil and is given by:

International:

$Vs = 4.44fBA/(10^4)$ $Ve = N\ Vs$

Ve = ac source voltage

Vs = Search coil volts per turn

f = Frequency (Hz)

B = Peak flux density (tesla)

A = Cross sectional area of iron behind the teeth (square centimeters)

N = Number of turns in the loop excitation coil

(English) $Vs = 4.44fBA/(10^5)$

B = Peak flux density (kilolines/square inch)

A = Cross sectional area of iron behind the teeth (square inch)
Otherwise the variables are the same as above.

Copyright © 2005 IEEE. All rights reserved.

Copyright The Institute of Electrical and Electronics Engineers, Inc.
Provided by IHS under license with IEEE
No reproduction or networking permitted without license from IHS Not for Resale

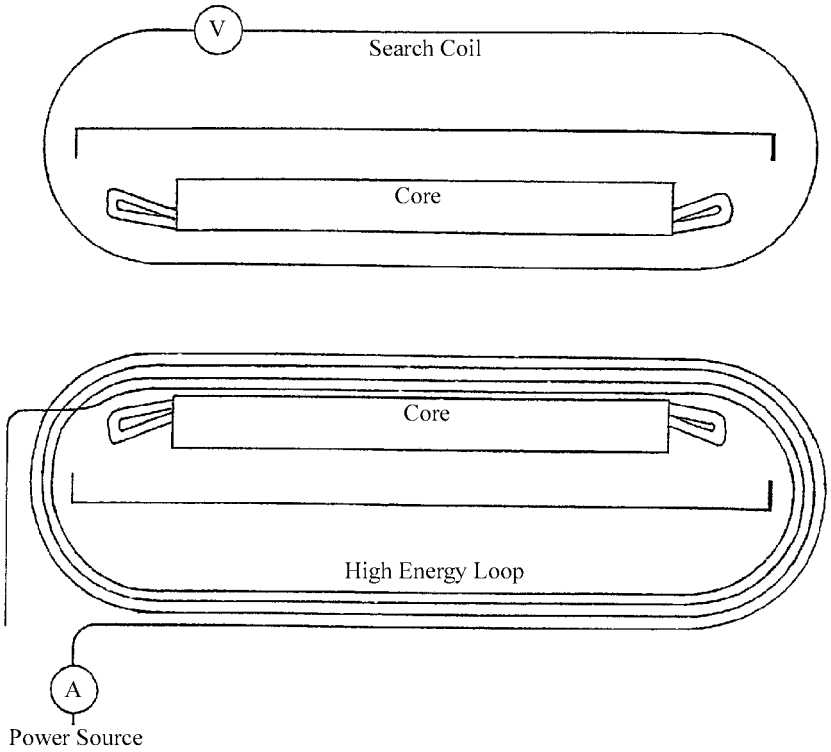

Figure 6—Stator core high energy loop test circuit

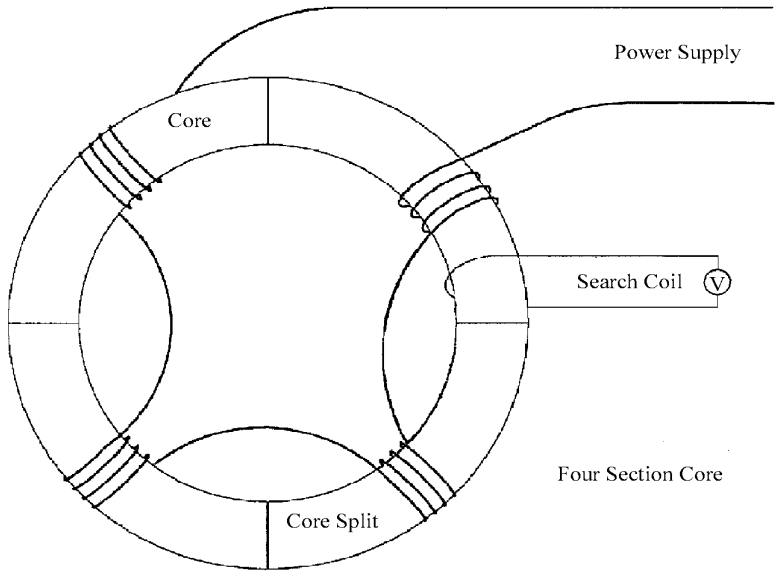

Figure 7—Hydromachine stator core high energy loop test circuit

Copyright © 2005 IEEE. All rights reserved.
Copyright The Institute of Electrical and Electronics Engineers, Inc.
Provided by IHS under license with IEEE
No reproduction or networking permitted without license from IHS
Not for Resale

A source voltage should be selected which requires multiple turns of exciting cable so that the current is manageable both at the breaker and by the cable size. The permeabilities of cores could change the required ampere turns to produce the rated flux density; however, see Table 4 for typical requirements.

Most cores are designed to operate in the range of 1 to 1.5 tesla. It is desirable to test near this range. However, a meaningful test can be made at a lower flux density and with less energy. Using Table 4, the power requirement drops off rapidly at a lowering of flux density. The search coil voltage, however, does not decrease at the same rate and, therefore, the test is effective in determining the condition of the core. When determining the turn requirements for the excitation loop, a whole number is not usually obtained. In order to keep from over-exciting the core, the turn requirements should always be rounded up to the next whole number. The permeabilities of the core differ to some degree and, therefore, some variation of current from the expected may be observed. This does not detract from the effectiveness of the test. Add a turn to the exciting loop if the current exceeds its carrying capacity. .

Table 4—Flux density and ampere-turns for excitation loop

Core Flux Density in tesla (*B*)	Ampere-Turns Per Centimeter of Mean Core Periphery
0.9	0.24
1.0	0.43
1.1	0.91
1.2	2.0
1.3	3.5
1.4	7.1
1.5	16

Table 5—Flux density and ampere-turns for excitation loop (English equivalents)

Core Flux Density in kilolines/in^2 (*B*)	Ampere-Turns Per Inch of Mean Core Periphery
65	0.6
70	1.1
75	2.3
80	5.
85	9.
90	18
95	40

NOTE—“Mean core periphery” as indicated in Table 4 and Table 5 is the circumference of a circle, which is midway between the bottom of the core slots and the outside diameter of the core.

Copyright © 2005 IEEE. All rights reserved.

Copyright The Institute of Electrical and Electronics Engineers, Inc.
Provided by IHS under license with IEEE
No reproduction or networking permitted without license from IHS
Not for Resale

If at the initial energization of the circuit the exciting loop cable current rating is exceeded, an additional series loop should be added.

If shorting between laminations is present, a closed loop will be formed by the building bolts or bars, the laminations, and the shorted area. Since the shorted area has the least cross-section, heating will occur there. The heat from deeply seated shorts will take a longer period of time to appear on the surface. Therefore, the test period should be about two hours. If the test is left on too long, the core will overheat.

7.2.3.2 Procedure

For the excitation, cable should be wound around the core as shown in Figure 7. A wooden trough should be built to support the cable on the outside of the frame. Inside the bore of the machine the cable should be supported on several wooden cross beams and an axial board to prevent cable sag between the cross beams. The cross beam board assembly should be placed approximately 1/3 of distance up from the bottom of the bore to facilitate personnel access to bore. The cables are attracted to each other by electromagnetic force.

Generally, it will not be necessary to tie the cables in the wooden trough on the outside of the frame but some wooden supports and ties will be necessary on the cable between the end of the core and the entry to the trough. Any electrically conductive loop (such as a water pipe connected to bearings at the top and bottom of a vertical shaft creating an electrically continuous loop) which encloses the flux created in the machine core will have large induced currents. Care should be taken to identify such loops and take measures to electrically open them.

For vertical units with large diameter frames, especially those with core separations in the periphery, it is essential to distribute the turns into groups around the core. For example, a 66-turn loop would be wound about the core in six locations containing 11 turns each on a six-section core. It is critical that the turns be connected so that the current flows in the same direction around the core.

Once the current transformer and ammeter have been added, the connection can be made to the exciting loop. Generally, it will be acceptable to read the applied voltage at the bus. However, because of line drop, this voltage should not be used to determine the core flux density. A one-turn search coil is a simple way of determining when the required flux level is reached. The search coil wire should be installed as shown in Figure 7and Figure 8. It is best to have this wire located away from the area where the exciting cable is wound. The search coil can, however, be placed on the same wooden cross beams on which an exciting loop is wound.

The insulation rating on the wire should equal or be greater than the maximum expected search coil voltage. It is recommended that the voltmeter be scaled in RMS. A voltmeter with high accuracy is not required, 1% is acceptable. The meter should be connected across the search coil as shown in Figure 7. Actual flux density can be calculated from the search coil voltage using the formula in 7.2.3.1.It is very important that the temperature of different parts of the stator core be carefully monitored after the loop is energized. In addition, a minimum of six thermocouples should be used to complement the thermographic inspection.

Thermocouples should be installed to measure the expected coolest and warmest positions of the stator core. For a horizontal machine, three thermocouples are normally placed on the 6 o'clock tooth surface which is expected to be the coolest surface, and three thermocouples on the 12 o'clock tooth surface which is expected to be the warmest. For a vertical unit, thermocouples should be evenly distributed on teeth surfaces at the top and bottom axially of the machine. These thermocouples should be separated axially along the tooth surface so as to measure temperatures at the center and about 30 cm (12 in) from each end of the core. In addition to monitoring the temperature of the bore surface during the test, the thermocouples will also be used to calibrate the infrared equipment. Under no circumstances should a thermocouple be placed on the ends of any of the insulated through bolts because the bolts are at search coil potential. The thermocouples should be thermally insulated from the surrounding air to assure closer correlation to actual core

Copyright © 2005 IEEE. All rights reserved.
Copyright The Institute of Electrical and Electronics Engineers, Inc.
Provided by IHS under license with IEEE
No reproduction or networking permitted without license from IHS
Not for Resale

temperature. A minimum electrical insulation should be placed between the core and the thermocouple to prevent shorting laminations with the thermocouple.

Normally a core is grounded through its attachment to the frame and the frame grounding cable. The core and frame system should be inspected to assure that such a secure ground of the core exists. A secure grounding system should be verified.

7.2.3.3 Precautions

Power disconnection: The voltage applied to the exciting loop shall be capable of being tripped from a location at or close to the test operator. This is specified so as to avoid damage to the core or injury to the test personnel, from a situation such as a cable failure. An on-off push-button type switch connected directly to the supply voltage breaker is generally used for this purpose.

The number of splices of the loop cable should be kept to a minimum and there should not be splices inside the core.

Visual check: Immediately prior to energizing the loop, a careful inspection of the bore area should be made to ensure that no foreign objects such as tools have been left in the core. A check should also be made for extraneous closed loops which could result in high circulating currents once the exciting loop is energized.

Thermographic calibration: The thermographic equipment should be calibrated with one of the stator bore thermocouples.

Energizing the loop: When the loop is energized, values should be immediately obtained for search coil voltage and exciting current. If these readings indicate either overloading of the exciting loop or an undesirable level of core flux density, then the loop should be de-energized and a suitable circuit adjustment made either to the cable size or the number of parallels or the number of turns. When an acceptable core flux density and cable current density has been obtained, the loop should be left energized.

Monitoring: The six installed thermocouples should each be read immediately prior to the loop being energized. Further readings should be taken as soon as the loop is energized and subsequently at five minute intervals. The bore surface and, if possible, the step iron should be continuously scanned with the infrared equipment. In order to view the step iron, it will be necessary to make thermographic scans from both ends of the machine.

Prevent Excessive Heating: The core should not be excited for an extended period of time, as the core is not ventilated and can seriously overheat.

7.2.3.4 Interpretation of results

The guidelines given below are general rule-of-thumb only; normally it will be advisable to consult with the OEM for specific recommendations on flux levels and test procedures.

Present day practice is not to allow the temperature of any part of the stator core (including hot-spots) to exceed 100 °C during magnetic heating. In the continuous two hour duration of a normal loop test, a core with no hot spots will be magnetically heated to a temperature that is considerably below 100 °C (approximately 30 ºC rise above the surface of the core inner diameter which is typically about 30 ºC). A core with damaged interlaminar resistance can on the other hand, quickly reach 100 °C.

Localized hot spots will be detected with infrared equipment. Damage at the bore surface will result in a localized hot spot which can be detected immediately after the loop is energized. However, if the interlaminar damage is subsurface, it will take time for the hot spot to manifest itself as a temperature rise at the bore surface with heating caused by normal variations in the watt loss values.

Copyright © 2005 IEEE. All rights reserved.

Copyright The Institute of Electrical and Electronics Engineers, Inc.
Provided by IHS under license with IEEE
No reproduction or networking permitted without license from IHS
Not for Resale

Normally, the watt loss value will be constant circumferentially around the core and for some axial distance, so that variations will appear in bands. A hot spot temperature rise is defined as the difference between the hot spot temperature and the temperature of the band in which the hot spot is located.

Bands should be measured relative to the calibration temperature of the core. All bands and hot spots within bands should be recorded as to their temperature and dimensions. If any questions arise as to the disposition of any hot spots, consult the original equipment manufacturer.

If the loop test is being run at or close to rated density for the standard two hour test duration, the temperature criteria for the thermographic inspection of the bore surface is that no hot spot be more than 10 °C above the surrounding ambient background temperature. It is permissible to allow the hot spot to exceed 10 °C for a time during the test in the expectation that it will blend in as the surrounding area comes up in temperature. A maximum of 20 °C differential may be observed. The temperature rise versus time should be plotted and closely monitored.

Hot spots which do not blend in, and which exceed the 10 °C criteria after the two hour test period should be identified and the associated iron damage repaired before returning the machine to service. Experience has shown that machine stator cores meeting the above temperature criteria over a continuous two hour test period can be considered to have satisfactory level of interlaminar integrity.

7.2.3.5 Test equipment

- appropriate power source
- exciting loop with instrumentation
- search coil loop with metering
- thermocouples and instrumentation
- infrared scanning equipment

7.2.4 Core tightness

7.2.4.1 Discussion

The core iron of a machine is clamped together such that the thousands of laminated steel plates that make up the core act as a single component. This clamping action is achieved by a combination of bolts and bars that clamp the laminations in an axial direction. In addition circumferentially applied radial clamping may be used, and these devices should be checked for tightness. During normal operation of a generator, especially a two pole machine, the core is pulled out of round by the interaction of the rotating magnetic fields. This action results in the core operating in a state of constant radial deformation. This deformation, which rotates at synchronous speed, is normally low in amplitude but will increase as the core clamping becomes loose. Such looseness can lead to the movement of laminations relative to each other, movement relative to clamping components, loosening of winding clamping components, loosening of wedges, breaking of vent fingers, and breaking of laminations. Evidence of such core looseness is an increase in core noise while in operation and a red oxide type of dusting between core components as observed during a visual inspection.

7.2.4.2 Tests for core tightness

Core clamping systems are designed in many different ways. The following list contains some checks that can be made on some commonly found designs.

- Radial clamping tightness can be verified by using a torque wrench or by measuring bolt tension to verify proper tightness of the bolts at the circumferential band splits.

Copyright © 2005 IEEE. All rights reserved.
Copyright The Institute of Electrical and Electronics Engineers, Inc.
Provided by IHS under license with IEEE
No reproduction or networking permitted without license from IHS Not for Resale

— Axial looseness of laminations can be checked by careful insertion of a knife between laminations, “knife test”, or gentle tangential pushing on vent fingers. In a properly clamped core, a knife blade cannot be inserted between laminations and the vent fingers are clamped so tightly between laminations that they cannot be easily deflected.

— Core end fingers should be tight enough to prevent insertion of a knife and they should show no signs of finger misalignment with respect to the punchings.

— If lockplates are found out of position, peen marks are not aligned, greasing is found at the interfaces, or welds are found broken, this may indicate core looseness.

— Axial clamping consisting of bars, bolts and nuts can be checked for proper compression of the core by measuring the torque of the clamping nuts. Care should be taken not to leave metal shavings in the machine when removing lock material in preparation for checking the torque. The OEM of the machine can supply the proper range of acceptable torques for all bolted clamping assemblies. In some cases stretch of clamping bolts is used to control core tightness. In these cases, a measurement of bolt tension is used to measure the tightness.

— On hydro machines, the core should be checked for out of roundness, tilting out of parallelism with the axis of the rotor and excessive waviness. Cores can be checked for the degree of these types of distortion by using a plumb bob, a square and various linear measuring instruments.

7.2.5 Stator core through bolt insulation resistance test

7.2.5.1 Discussion

One method of axially clamping the laminated core of a horizontal machine is to utilize axial bolts at the back iron area and another set of bolts approximately midway between the bottom of the slot and the outside diameter of the core. Since the two sets of bolts are in contact with the lamination segment at two points radially, the bolt nearest the bore is insulated to prevent circulating current. These are called through bolts. The through bolt assembly consists of insulated bolts, overlapping insulation bushings on the bolt ends, and insulating washers.

7.2.5.2 Procedure

In order to test the integrity of the insulation, it should be checked with a dc megohmmeter. Typical test value is 1000 V dc; consult the manufacturer for recommended level. To accomplish this, one test lead of the megohmmeter has to be in contact with the bolt or the bolt nut by cleaning a spot on the surface of the bolt end or nut or utilize an awl, which can pierce the paint on the bolt or nuts. Attach the other lead to a clean surface (ground) on the stator frame. Allow the megohmmeter display to stabilize, then record the value. This process should be repeated for each insulated bolt in the stator. A reading over 1 megohm is acceptable.

7.2.6 Stator core flux shield insulation resistance test

7.2.6.1 Discussion

As machine size increased, the need to increase the radial air gap to hold down the short circuit ratio has increased the core end leakage flux. In addition, movement of the generator rotor farther out beyond the ends of the stator core as a result of thermal expansion of the turbine rotors, operating near unity or in the region of under excitation, increases end leakage flux. Design modifications were needed to prevent core damage due to this end leakage flux. One solution was to add a flux shield to act as a damper to direct the flux away from the stator core ends. In order to protect from harmful circulating currents within the laminated flux shield, some manufacturers provided additional insulation to reinforce the interlaminar insulation. Tests should be performed to ensure electrical separation between the various laminated flux shield components.

Copyright © 2005 IEEE. All rights reserved.

Copyright The Institute of Electrical and Electronics Engineers, Inc.
Provided by IHS under license with IEEE
No reproduction or networking permitted without license from IHS
Not for Resale

7.2.6.2 Procedure

Tests of insulation resistance should be made between adjacent core support plates, between the laminated flux shield and each core support plate, and between the laminated flux shield and the grounded frame.

These tests should be made with a megohmmeter. Typical test value is 250 V dc; consult the manufacturer for recommended level. For the test leads, it is important that the paint surfaces are pierced which can be accomplished by using an awl. Each of the tests should be continued until a stabilized reading is observed, then record the data. The insulation should be greater than 1 megohm for each test.

7.3 Stator coolant passage

Stator coolant passages are those passages in which air, hydrogen gas or a liquid is forced to pass through in order to remove heat from the surrounding material.

7.3.1 Stator coolant passage visual inspection

7.3.1.1 Discussion

Machines contain gas and/or liquid ducts which direct the coolant to various regions. If there is a disruption or change to a coolant flow pattern, serious damage from overheating could result. Also loose or broken parts can migrate into areas which could result in foreign object damage. If an air cooled machine is operated in an atmosphere containing dust or other solid particles, there may be a build up of contamination in the air vents.

7.3.1.2 Inspection

Air cooled machines should be inspected for air vent obstruction by airborne contaminants or other material. The gas passages and baffles should be visually inspected for signs of distress such as weld and material cracks. Hardware should be inspected for tightness and proper locking. Covers necessary to see hidden areas (such as clean-out covers on the back of the frame) should be removed, if necessary for a complete inspection.

7.3.2 Gas cooling passage pressure drop and flow

7.3.2.1 Coil ventilation tube pressure drop test

These tests can be performed to check for obstructions and leaks in the coolant passages of gas inner-cooled machines. These tests may also be adapted to perform similar checks on the air ventilation passages of air cooled machines.

7.3.2.1.1 Discussion

This describes the procedure used for determining if the cooling passages through gas inner-cooled coils are blocked and could impede the flow of cooling gas. Any blockage of the cooling tubes could seriously jeopardize the machine winding by the increase of internal temperatures. This blockage could occur in several ways, principally by foreign objects or by collapsing of the tubes themselves.

The test employs the use of air flow through the tubes and a resultant difference in back pressure to detect blocked passages. This test is performed at all major inspections and is especially important in verifying that the machine is ready for closing after rewind or major winding repair. It is also used in diagnostic work in the determination of high coil temperature alarms.

Copyright © 2005 IEEE. All rights reserved.
Copyright The Institute of Electrical and Electronics Engineers, Inc.
Provided by IHS under license with IEEE
No reproduction or networking permitted without license from IHS Not for Resale

7.3.2.1.2 Procedure

A nozzle should be prepared from thin-walled tubing which conforms to the inside dimensions of the cooling passage as closely as possible and will still enter the opening.

The test equipment should be connected to a clean and dry air supply. The regulator should be adjusted until approximately 100 cm (39 in) of water is read on the test gauge with unrestricted flow in free air. The nozzle should be carefully inserted into each ventilating passage making sure that the rubber grommet surrounding the nozzle is sealing tightly at the passage end. Each test gauge reading should be documented with respect to location and coil number. The test should be repeated until all passages are tested.

The test values of all passages of the same size should be averaged. Passages within plus or minus 10% of this average are considered acceptable. All passages outside the test limits should be retested for verification and corrective action.

7.3.2.2 Circuit ring and bushing flow test

This procedure can be used to verify that the ventilation circuits through the parallel ring, main lead connectors and bushings are not obstructed.

7.3.2.2.1 Discussion

These tests should be performed on the following:

a) Machines on which maintenance work has been performed on the phase lead assemblies, the parallel rings, or the bushings.
b) Machines on which the field erection includes the installation of the bushing lead box.

The tests should be made after all work is complete.

All ventilating paths should be tested so that the air flow goes between the normal high pressure zone and its low pressure zone. Circuits which share a common exit should be blocked off before testing the circuit.

7.3.2.2.2 Procedure

Parallel paths not being tested should be sealed off.

The nozzle should be secured to the opening in a leak-free manner. In addition, checks should be made during the test for the presence of air leakage which would affect the results.

The test is made by opening the valve until 2.5 kPa (10 in of water) is seen on the gauge. The flow at this pressure is recorded and at each increment of 1.25 kPa (5 in of water) until the maximum flow of the equipment is achieved.

All circuits are tested and the data compared to prior or calculated data. Variations greater than 5% should be cause for investigation.

Caution: All material used to close off openings should be removed and accounted for.

7.3.2.2.3 Test equipment

The minimum test equipment to perform this test consists of the following components:

a) Air line filter
b) Valve and regulator

Copyright © 2005 IEEE. All rights reserved.

Copyright The Institute of Electrical and Electronics Engineers, Inc.
Provided by IHS under license with IEEE
No reproduction or networking permitted without license from IHS
Not for Resale

c) Air pressure gauge, 0 to 200 kPa (0 - 30 psig)

d) Flowmeter - venturi type

e) Hose and test nozzle

f) Pressure gauge, 0 to 25 kPa (100 in of water)

7.3.3 Water cooling passage leak tests

This procedure monitors and detects large leaks, and contains maintenance procedures for locating all leaks including small strand-header leaks.

7.3.3.1 Discussion

Liquid cooled stator windings contain thousands of joints with the potential for leaks to develop. There are two general categories of joints that can become a source of hydrogen or water leak:

1) Numerous flanged and clamped hydraulic joints and fittings, and

2) the complex brazed hydraulic/electrical connections between the stator bar strands and the individual bar water supply header. In addition there is the possibility of cracking or other mechanical failure of pipes and fittings.

Leaks associated with loosening flanges, deteriorating clamp fittings or cracked piping may be benign or serious, depending on size and location. Small leaks typically will not result in winding damage so long as hydrogen gas pressure is always maintained above the stator cooling water pressure. Escaping hydrogen will simply be vented to atmosphere through piping provided for that purpose. But large leaks associated with piping, flanges and fittings may cause major winding failure. If hydrogen flows into a stator bar hydraulic circuit and displaces water flow, the bar will overheat and may fracture due to differential expansion between the hot bar(s) and the remaining winding. On the other hand, if water leaks from a winding hydraulic circuit, electrical creepage surfaces may be contaminated, causing flashover and severe winding damage.

Experience has shown that the second category of leak, that of the individual bar strand headers, is much more troublesome. Leaks in these areas generally are very small, and water leakage rates in the order of 2 or 3 mL per week can cause irreparable damage and eventual failure of stator bar groundwall insulation. Leaks of this type are difficult to detect, both due to size and location. On-line and vacuum and pressure decay tests are unlikely to detect a small strand/header leak.

7.3.3.2 Responsibilities (qualifications)

Numerous, broad-ranging technical procedures are described in this guide. Personnel assigned to do this work should be familiar with operation of the sophisticated equipment used in the various tests and should understand the purpose and nature of the inspections and tests performed.

7.3.3.3 References

Knowledge of the operating and maintenance history of the specific machine is important to assessing current conditions and progress of any deterioration which may be found. In addition, participation of the manufacturer is strongly suggested in order to assure understanding of design details of the machine which impact the decision making process.

Copyright © 2005 IEEE. All rights reserved.
Copyright The Institute of Electrical and Electronics Engineers, Inc.
Provided by IHS under license with IEEE
No reproduction or networking permitted without license from IHS Not for Resale

7.3.3.4 Time intervals

On a normally operating machine or a machine that is off line, checks and inspections should be performed on a schedule similar to the following, or as recommended by the original equipment manufacturer. For a given machine, the owner should adjust this schedule based on the machine's operating and service history.

a) Weekly - Monitor check flow from the water cooling system ventilation line.

b) Minor inspection (2-3 year cycles) - Vacuum/pressure decay test. Helium test (rotor removal optional).

c) Major inspection (5-7 year cycles) - Vacuum/pressure decay test. Helium test (rotor removed). Capacitance test (rotor removed).

7.3.3.5 Precautions

The described tests and inspections are generally non-destructive in nature and are not inherently hazardous to personnel.

7.3.3.6 Procedures

There are several in-service leak testing methods for liquid cooled stator windings which should be done while off-line as long as the unit is filled with hydrogen. Three common methods of leak detection are available:

a) Hydrogen gas dew point,

b) The liquid detector alarm, and

c) Excess hydrogen gas flow from the liquid system vent line.

If water is found in the leak detector, the gas flow from the liquid system vent should be immediately checked. If gas flow is normal, the water leak source is probably the hydrogen coolers, although small amounts of water may be inducted from a contaminated hydrogen gas supply. Historically, checking flow from the liquid system vent line has been done by various manual methods. However, there is now available from manufacturers instrumentation that will continuously monitor, display and alarm vent line gas flow. If flow from the vent line is found to be excessive, damage to the machine may be imminent. Corrective actions should be taken in accordance with the manufacturer's recommendations. Presence of incorrect water pH or accumulation of “green slime” in the cooling water filters may indicate that excessive hydrogen is getting into the water circuit.

7.3.3.7 Water removal and internal drying of the liquid system

It is essential that the stator liquid system be thoroughly dried internally before performing stator leak testing (not including capacitance testing). Even small amounts of moisture within the winding can conceal small leaks and make the leak undetectable. Also it is not practical to perform a vacuum decay test with moisture in the winding. The most efficient method of removing the bulk of the water from the liquid system is through blow-down with dry air from a large pressurized holding tank. The last remaining moisture can then be removed in about 24 hours using a large pump to pull a high vacuum. Manufacturers have equipment available specifically to efficiently dry liquid systems.

7.3.3.8 Vacuum decay testing

The primary advantage of vacuum decay testing is the sensitivity of the test. Decay measurements are made in tenths of a pascal, too small an interval to be detectable on a typical pressure gauge, yet easily measured with common vacuum gauges.

Copyright © 2005 IEEE. All rights reserved.

Copyright The Institute of Electrical and Electronics Engineers, Inc.
Provided by IHS under license with IEEE
No reproduction or networking permitted without license from IHS
Not for Resale

Vacuum decay test measures the leak rate of the entire winding without requiring internal access to the machine. The test is relatively insensitive to changes in temperature and barometric pressure, and accurate results can be obtained in as little as one hour.

However, because of the extreme accuracy of the test, it is essential that all connections be tight and all components be in good condition. In addition, it should be recognized that the electrical isolating hoses may out-gas at sufficiently high rate to simulate a very small leak. Windings that fail vacuum decay test and show indications of out-gassing should be further vacuum dried and retested.

7.3.3.9 Pressure decay test

Pressure decay test has three advantages over vacuum decay test:

a) pressure decay provides up to five times the pressure differential,
b) applies the pressure in the normal direction of leak flow, and
c) allows use of bubble solutions.

These factors make it easier to find some leaks undetectable with vacuum.

Drawbacks to pressure decay testing are its insensitivity to small leaks, sensitivity to changes in environment (temperature and barometric pressure), and time required to obtain significant increment of test values. On a typical test, 4 liters should leak out of the system to register a change of 1 kPa. Thus patience and an extremely accurate instrumentation are required.

The liquid system should be completely dried before beginning pressure decay, since the high pressure may force moisture into insulation through a yet undetected leak. Therefore, it is preferable to conduct vacuum decay test before pressure decay test, and dry air or nitrogen should be used for pressurization.

Experience has shown vacuum and pressure decay tests to be quite complementary and neither should be omitted.

7.3.3.10 Tracer gas testing

There are a number of tracer gases and tracer gas detectors on the market. Helium is the preferred tracer gas for testing water-cooled windings because of several properties: small molecule, inert, nontoxic, non-hazardous, and it is easily detected. SF6 has also been used, because of its inherent sensitivity and low cost of detection equipment; however, there is some concern because SF6 is not inert and under certain conditions may combine with water to form an aggressive compound.

Sensitivity of tracer gas can be greatly increased by bagging the individual series and phase connections. In numerous cases, tracer gas has found small leaks (as small as 10-4 std cc/sec) buried under the insulation that otherwise were not found with vacuum and pressure decay.

Where bagging can not be applied, the sniffer should be brought within 5 cm to detect small leaks. This makes evaluation of the entire winding not practical with tracer gas detection. The field should be removed to perform an effective tracer gas test.

7.3.3.11 Capacitance testing

Capacitance testing is used to detect moisture in the groundwall insulation. The test is performed with inexpensive, readily available battery-powered capacitance meters, and is nondestructive to the insulation. The reading is taken in the end winding region, within a few centimeters of the end of the core. While the test is simple to conduct, with presently available equipment, access to the bars requires that the field be removed.

Copyright © 2005 IEEE. All rights reserved.
Copyright The Institute of Electrical and Electronics Engineers, Inc.
Provided by IHS under license with IEEE
No reproduction or networking permitted without license from IHS
Not for Resale

The intent of this test is to locate bars that are wet and at high risk of in-service and/or overvoltage test failure. If a bar is proven to actually be wet, water has penetrated under the groundwall insulation the full length of the bar arm from the strand/header. Under these conditions, insulation deterioration will be significant, and the bar is not considered suitable for long-term service, even though it may pass an overvoltage test. A decision regarding how long such a bar may safely remain in service is best made by the owner of the machine while in consultation with the machine's manufacturer.

The capacitance test is based on the large difference between the dielectric constant of water and that of typical dry groundwall insulation, a ratio of about 4:1. Readings are taken for each top and bottom bar at both ends of the core. When plotted, unaffected bars will form a fairly tight “normal” distribution. Wet bars will fall significantly outside the normal distribution. A bar which reads +3 standard deviations or greater is considered suspect. A bar with a reading in the range of +5 standard deviations from average is almost certainly seriously damaged.

Bars which are confirmed to fall significantly outside the normal distribution curve should be further investigated by stripping the series/phase insulation. Visual examination for signs of moisture should be made of the joint and groundwall tapes, along with further pressure decay, tracer gas and bubble solution checks.

7.3.3.12 Interpretation

The broad scope and complexity of the various tests associated with assuring hydraulic integrity will require that personnel be fully qualified. Most bigger leaks will be easily found and required corrective action will be obvious. But assessment of small leaks, particularly those under the groundwall insulation, may be difficult and involve a high level of judgment.

Because decisions should be made based on the specific design of the unit, participation of the manufacturer's engineers will generally be necessary.

7.3.4 Water flow verification

This procedure is intended to verify that all cooling passages are open to water flow.

7.3.4.1 Discussion

The verification of water flow through the winding components is necessary to assure that no blockage is present. Each circuit should be verified which could include bushings, circuit rings, and neutral buses in addition to the stator bars. This test should be made following leak repairs or work in the winding which could affect the flow passages. The test can also be made as part of a standard inspection program; however, if leaks are suspected, pressurization of the coolant passageways with no pressurized gas in the machine may force water into groundwall insulation which will affect the integrity of the insulation.

When making acoustic tests, good hose condition, the use of acoustic couplants, and proper clamping are important elements for accurate reading.

Two methods are available for verifying that water flow through the individual stator bar liquid circuits is correct:

— flow continuity test, and

— acoustic flow measurement.

Copyright © 2005 IEEE. All rights reserved.

Copyright The Institute of Electrical and Electronics Engineers, Inc.
Provided by IHS under license with IEEE
No reproduction or networking permitted without license from IHS Not for Resale

7.3.4.2 Flow continuity test procedure

Flow continuity test is a major effort and is performed by establishing a temperature transient across the winding. This test requires:

a) large heat source, 125–175 kW, to heat the stator cooling water to near 90 ºC,
b) instrumentation to rapidly read the stator winding RTDs and TCs during the temperature transient, and
c) cooling water supply to establish the transient.

7.3.4.3 Acoustic flow test

Acoustic equipment with the proper sonic pick-up can read individual hose flow magnitudes. Reliability of the test equipment performance should be verified before using the equipment to replace flow continuity test.

8. Inspection and test techniques—AC machine rotors

The evaluation procedures described below are performed on the various rotor components of both cylindrical and salient pole machines.

8.1 Rotor winding

The winding considered in the following subclauses is the rotating field winding of a cylindrical or salient pole machine.

8.1.1 Rotor winding visual inspection

The following is a listing of critical points which require detailed inspection for each type of rotor. Some of these will be discussed in detail in the component subclause.

8.1.1.1 Cylindrical rotor

— dusting or erosion of end winding due to looseness or movement of end winding bracing components
— cracks in end winding copper with specific emphasis on pole-to-pole connections and main leads
— evidence of copper dusting in the slot areas
— contamination of end winding insulation, especially over cell extensions at each end of the rotor body
— evidence of axial movement of all slot components
— ventilation obstructions - end winding, collector rings, and, in the case of inner cooled rotors, in the slot portion of rotor coils
— overheating, mechanical, or rust damage to any rotor components including blowers, fans, blower hub, radial leads, collector rings and circumferential slots in the pole faces of rotor body
— evidence of overheating sometimes is evident in the form of half moon shaped blueing or discoloration between adjacent slots on the retaining ring nose
— looseness of balance weights and other hardware as evidenced by improper locking or peening or other forms of vibration or movement
— evidence of abnormal faults in operation by coupling and coupling keyway distortion.
— cracked, raised or axially displaced wedges

--`,,`,`,-`-`,,`,,`,`,,`---
Copyright © 2005 IEEE. All rights reserved.
Copyright The Institute of Electrical and Electronics Engineers, Inc.
Provided by IHS under license with IEEE
No reproduction or networking permitted without license from IHS
Not for Resale

- evidence of movement of the retaining rings
- overheating, scoring, frosting, or other damage to bearing journals, bearing or gland seal rings
- reports of hydrogen leakage which would require the application of a leakage test to the axial and radial lead assembly to determine the source of leakage
- the condition of the collector insulation (cleanliness, tightness, and surface appearance.)
- evidence of collector ring wear and condition of its surface
- retaining ring damage due to overheating, foreign objects, handling of field, movement, negative sequence current heating due to contact by wedges or poor contact to field body
- water stains on retaining rings
- dirt and other contamination build-up
- locking of balance weights and other attachments
- condition of fans and compressors

8.1.1.2 Salient pole rotor winding

All hydro machines have salient poles and windings. Other machines that may have salient poles are synchronous generators or condensers and synchronous motors. The speeds of salient pole machines do not exceed 1800 r/min Above this speed, a cylindrical rotor is required.

Salient pole rotor windings should be inspected as outlined below:

- Interpole connections should be inspected for signs of overheating, mechanical damage, and loose components. Bolted interpole connections should be checked for required torque and captive hardware.
- The copper winding turns should be examined for signs of discoloration (overheating), distortion, and “bowing.” Bowing can occur on long poles that have no coil braces between adjacent poles.
- Turn-to-turn insulation should be inspected for any sign of movement, missing pieces, or overheating.
- Pole collars should be inspected for mechanical damage and movement. If there is a space between the iron, the copper or the collar, a new thicker collar may be required.
- Surface contamination should be inspected for and its contents analyzed if found.

8.1.2 Conductor resistance test

8.1.2.1 Discussion

The field winding is a series dc winding usually consisting of copper bus bar sandwiched between insulating sheets or blocks. The total resistance of the winding is normally measured as fractions of an ohm. A significant variation from normal resistance of the winding may only be noticed at the third or fourth decimal place of a resistance measurement. For this reason, a microhmeter or Kelvin bridge with five place accuracy is required and temperature of the copper has to be accounted for.

8.1.2.2 Procedure

Use the same procedure as outlined in 7.1.10, Winding Conductor Resistance Test.

8.1.3 Salient pole field winding interconnection test

The following procedure applies to the electrical testing of the interpole connections of the field windings. Field windings on salient pole machines are connected together between poles such that they are combined to form a complete series field winding circuit. These connection points can fail due to the thermal,

Copyright © 2005 IEEE. All rights reserved.

Copyright The Institute of Electrical and Electronics Engineers, Inc.
Provided by IHS under license with IEEE
No reproduction or networking permitted without license from IHS
Not for Resale

mechanical, and electrical stresses they are exposed to while in service. Periodic testing and inspection of these joints can reveal problems which may lead to such a failure.

8.1.3.1 Precautions

Field windings are a highly inductive circuit element. A sudden interruption in the flow of dc current through the inductance of the winding can produce lethally high voltages. Precautions should be taken to assure that no unwanted parallel circuits are under test and that the brushes are lifted off the collector rings. The field winding should be tested in an open circuit condition.

8.1.3.2 References

Test results from previous tests. It should be known what the winding temperature was when the previous tests were made.

8.1.3.3 Procedure

Electrical tests are performed using a four terminal, high current (typically 100 A) dc low resistance, high current measuring device capable of reading in the microhm range.

Interconnections between the main field windings of adjacent salient poles frequently take the form of solid copper jumpers which are bolted to contact pads on the poles. Alternately, some manufacturers utilize a connection which takes the form of parallel copper leaves, which may be soldered.

A four terminal resistance measurement across each connection may be useful in detecting particular connections which are substandard or deteriorated. In evaluating the measurements one should compare the results for identical contact geometry.

8.1.4 Field winding insulation resistance test

8.1.4.1 Discussion

The field winding insulation is usually in the form of insulating sheets and blocks. Since most field winding conductors do not have taped insulation, there is little to prevent dirt and other contaminants from coming in contact with the conductors. The combination of contamination and moisture often lead to the bridging of the insulation to ground.

In addition, the mechanical forces exerted on the insulation system by the conductor when in operation can cause mechanical failure of insulating components. For these reasons, it is important to check the integrity of the insulation system at periodic intervals such as balance of plant overhauls, when moisture and contamination are thought to be present or when there is an indication of a field ground.

8.1.4.2 Procedure

The same procedure can be used as outlined in 7.1.3.

For field windings, the absorption current is generally not as high as leakage currents; therefore, the polarization index is generally closer to one. For this reason the one-minute insulation resistance reading is more important in assessing rotor winding insulation condition. Comparison of values with past history is also helpful.

--`,,`,`,-`-`,,`,,`,`,,`---

Copyright © 2005 IEEE. All rights reserved.

Copyright The Institute of Electrical and Electronics Engineers, Inc.
Provided by IHS under license with IEEE
No reproduction or networking permitted without license from IHS Not for Resale

8.1.5 Locating winding grounds

Two procedures can be combined to quite accurately locate a confirmed ground: split voltage test and forging current test. If ground resistance is less than about 10 000 ohms, location can be identified with high precision. If resistance is between 10 000 ohms and 100 000 it is usually possible to define the ground location with use of good instrumentation and procedures. If resistance is over about 100 000 ohms, it may be necessary to "burn" the ground to a lower value by conducting an overvoltage test in order to locate the ground.

The split voltage test will identify the location of the ground within the copper winding, i.e., the grounded coil or perhaps the location within a coil.

The forging current test will provide the axial location of the ground within the field forging, i.e., under a specific retaining ring, or axial position along the body of the field.

8.1.5.1 Split voltage test procedure

A dc voltage is applied across the collection rings as shown in Figure 8. Care should be exercised to assure a solid low-resistance contact between the collector and the power leads; otherwise there is risk of arcing or excess heat that could damage the rings. (On machines with rotating rectifiers, connection would be required to the leads between the rectifier and winding.)

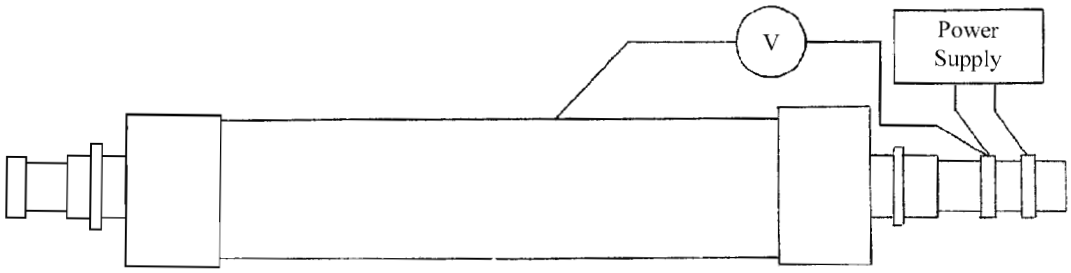

Figure 8—Electrical Connections for Split Voltage Test

A current in the range of 100 to 300 a from a voltage source of about 5-20 V is usually adequate. The lower voltage range will give good results if a high-accuracy, high-impedance meter is used and the ground path resistance is not high. The lowest practical value of field current should be used to minimize the likelihood of damaging heat at connection points. Larger currents will also cause rotor heating during the test which can affect voltage readings as the measurements are taken. Caution: The dc power source should be ungrounded. Note: Some modern dc welding machines regulate voltage and are not suitable for use in this procedure.

Measure the voltage across the two collector rings and record the values. Measure the voltage from each individual ring to any point on the forging. The sum of the two voltages between the individual rings and forging should total the voltage measured across the collectors. If the sum of the two voltages is not equal to the voltage across the rings, either the ground resistance is too high for the meter sensitivity and impedance or there is more than one ground location, making the test inconclusive. (If the winding does not have a

Copyright © 2005 IEEE. All rights reserved.

Copyright The Institute of Electrical and Electronics Engineers, Inc.
Provided by IHS under license with IEEE
No reproduction or networking permitted without license from IHS
Not for Resale

single discreet ground but has low resistance due to general contamination, the ground will calculate to be about at the mid-point of the winding.

If the readings produce satisfactory totals, the ratio of the voltage from a ring to ground divided by the total voltage is proportional to the distance (resistance) through the winding from that ring to the ground location. For example:

10V = Total voltage across the rings

4V = Voltage from the positive ring to the forging

6V = Voltage from the negative ring to the forging

The ground is located 40% of the distance through the winding from the positive ring.

If the split voltage division is about 2% or less from either ring to ground, a fault location in the axial connections, radial studs or the collector assembly would be indicated. The connection at the stud should be opened to confirm that the ground is in the collector area rather than in the winding.

With a retaining ring removed, further testing can be performed to determine ground location. With voltage again applied to the winding, the ground will be located at the point in the winding where the voltage between the winding and the forging is zero.

Procedure: Apply the dc voltage across the rings, as with the split voltage test. Connect one lead of the voltmeter to the forging and probe each turn of the winding in the section of the winding known to be grounded from the previous tests. The ground is located in the turn where zero voltage is read. (In some direct cooled fields, the probing may be possible through the field wedge ventilation holes.)

8.1.5.2 Forging current test

Application of a high dc current through the field forging from one end to the other will produce a small voltage potential between the two connection terminals. The magnitude of this potential is determined by the resistance of the circuit through the forging and the value of the current flowing, the IR drop. In order to estimate the value of current required to obtain readily measurable voltages, consider the following example:

Consider a forged cylinder that is 6 meters long with a cross-section of 0.8 m^2; average resistivity of the forging steel, 0.15 microohm meter.

Then the resistance of the forging from end to end is

$R = [(0.15 \times 10^{-6}\Omega\cdot m) \times 6\ m]/(0.8\ m^2) \approx 1.1\ \mu\Omega$

A test current of 500 a will produce a voltage drop (IR drop) of 0.55 mV, or approximately 0.1 mV per meter of length.

Values can be calculated for actual field dimension. But this example indicates that it is necessary to use fairly high current and accurate, high impedance voltmeter.

Procedure summary—Figure 9

1) Attach a high power current cable to each end of the forging. The connection points should be clean and the contact pressure high, otherwise forging burning may occur.

Copyright © 2005 IEEE. All rights reserved.
Copyright The Institute of Electrical and Electronics Engineers, Inc.
Provided by IHS under license with IEEE
No reproduction or networking permitted without license from IHS Not for Resale

2) Connect a high capacity direct current source: 300–1000 a.

3) Connect a voltmeter to read voltage between forging and one of the collector rings. The meter should be a low range high impedance millivolt meter (range 1–5 millivolts).

4) Apply current to the field forging. Increase current flow to about 300 a. If sensitivity is sufficient to obtain good readings, proceed with the test. Otherwise increase the current value.

5) Probe the forging axially from end to end, noting the point where the voltage becomes zero. Beyond this point the voltage polarity will reverse. The zero point, point where polarity reverses, is the axial position of the fault.

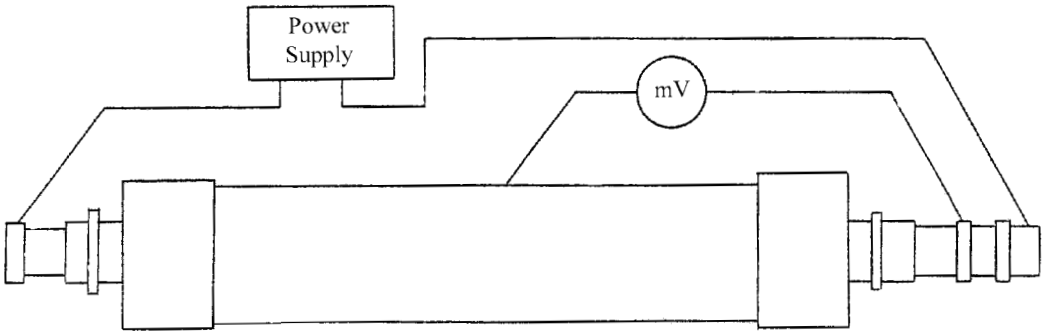

Figure 9—Electrical connections for forging current test

8.1.6 Turn insulation testing (impedance and pole drop test)

This procedure is used to detect shorted turns in rotor coils.

The impedance of the winding under test can be measured at standstill on all multiturn salient or cylindrical field coils or at speed on those with collectors. An impedance curve can be established by varying a power frequency voltage, measuring the current, and calculating the impedance. It is important that comparisons be made on similar conditions of rotor environment such as assembled or unassembled. Similar conditions of assembly should be used for comparison. The presence of magnetic material could affect the results, therefore the field should be elevated from steel reinforced floors or bed plates. The test results will change depending on the presence of factors changing the characteristics of the impedance. Shorted turns will be detected by a step change in impedance when shorted turns appear either by voltage or speed changes. If shorted turns are present at all speeds and/or voltages, a comparison to the “as new” impedance or prior satisfactory test will show the change necessary to conclude that shorted turns are present. Field coils are reasonably uniform in structure so that the impedance characteristics at a fixed current will produce the comparable voltage drops across all coils unless shorted turns are present. Slight differences may occur with open and crossed wound field coils, however the alternate pattern of these coils can be compared.

Salient pole machines with springs should be limited to not more than 10 min of excitation during this test. Since these springs in effect produce a closed circuit around the energized poles, they will heat up. Therefore the test should be made as quickly as possible.

Copyright © 2005 IEEE. All rights reserved.

Copyright The Institute of Electrical and Electronics Engineers, Inc.
Provided by IHS under license with IEEE
No reproduction or networking permitted without license from IHS
Not for Resale

8.1.6.1 Impedance test procedure

The maximum test voltage is limited by either the voltage source or the current capacity of the variable auto transformer. This voltage should be determined by raising the voltage to the limiting factor.

The maximum test voltage should be divided into 10 equal increments. Starting at the minimum voltage step, the voltage should be raised through each step, measuring and recording the voltage and the current until the test is completed at the maximum voltage.

The impedance should be calculated for each step and the results plotted as a function of the voltage.

As the voltage is raised, the presence of shorted turns should appear in the results as a lower impedance.

The amount of the step change in impedance can be used to calculate the number of shorted turns present.

8.1.6.2 Running impedance test procedure

A running impedance test can be made if shorts are suspected at speed and are not present at standstill. The highest test value of impedance test is applied to the field winding brush rigging on the assembled unit. The rotor is driven by the turbine up to rated speed in 10 to 12 increments. Readings are taken at each step and the impedance is plotted. Step changes in the impedance will indicate when and if speed sensitive shorts are present.

8.1.6.3 Pole voltage drop test procedure

This procedure describes the pole drop test which is used to detect shorted turns in field coils. The test is normally done with ac voltage, but can be done with dc. This test should be performed immediately following the impedance test with the same test equipment.

The voltage drop should be measured from the start and finish end of each coil. The procedure should be repeated on each pole until all have been measured. Turn-to-turn shorting is indicated when the voltage drop measured across a coil is lower than for a similar coil. Measuring the phase angle between the applied voltage and current may help to identify shorted turns.

On salient pole machines, a shorted coil may affect the voltage drop of the adjacent coils. Therefore if three coils adjacent to each other appear to be shorted and the middle coil is the lowest, it is most likely the only coil which is shorted. A good indicator of the effect of a shorted turn can be achieved by installing one loop of insulated copper cable around a good field coil and clamping the bare ends together.

A shorted coil should be probed for turn-to-turn voltage drops in order to locate the shorted turn or turns per subclause 8.1.7.

On turbine generators, each pole consists of multiple coils. However, this test is only made across the entire pole at the crossovers and main leads. On some rotors, the crossovers are inaccessible. Since some of the rotors with inaccessible crossovers are also radially cooled, a turn drop (turn-to-turn voltage) measurement can be made through the radial vents. To accomplish the turn drop, connect the supply source in the same manner as the pole drop test. Connect one test lead to a main lead and insert the other into the radial vent holes and measure the voltage on each turn. The voltage difference from turn to turn will be the same order of magnitude except where a conductance exists between turns. On some rotor designs, access to coil connections would also allow coil by coil voltage drop testing.

8.1.6.4 Test equipment

— AC voltmeter (250 V)

Copyright © 2005 IEEE. All rights reserved.
Copyright The Institute of Electrical and Electronics Engineers, Inc.
Provided by IHS under license with IEEE
No reproduction or networking permitted without license from IHS Not for Resale

— AC ammeter (50 A)

— 50–100 ampere variable auto transformer

8.1.7 Turn short location (turn drop)

A turn drop test is a type of impedance test which focuses on comparing the impedance of individual turns, or group of turns, rather than comparing impedance of complete poles. This test can not be performed on all cylindrical or salient pole machines. The individual copper turns of the winding have to be accessible to the point where a test probe can be placed in contact with them. Such contact points can often be found under the retaining rings or in the radial cooling ports found on the body of cylindrical rotors. The meter used should have sufficient sensitivity to measure this effect.

8.1.7.1 Procedure

Temporarily puncturing some turn insulation or paint may be required on the outer edge of individual outer turns on salient poles for probe contact. If the pole windings are insulated and the same location on each pole is pierced, sufficient data can be gathered to narrow the search. This will not provide information on individual turns but it should provide information on identical groups of turns, which can be used for comparison purposes. Should this insulation puncturing be performed, it is necessary that it be properly repaired.

The turn drop test is performed as a continuation of the impedance test (8.1.5) using the same equipment. The applied power line peak voltage should not exceed the dc rating of the field winding under test. This voltage should be applied across a complete pole winding and a probe is used to contact various turns of the winding. The probe is connected to a voltmeter which is referenced to one of the field pole winding ends. The winding, relative to this referenced end, acts as a voltage divider. The voltmeter indication should be proportional to the number of turns spanned between the reference end of the winding and the location of the probe.

8.1.7.2 Interpretation of results

As successive turns are probed, the voltage should change in equal increments. Any voltage change which is not consistent with the number of coils spanned should be cause for concern. Some variation in reactance due to a specific turn's location on the pole piece may cause some slight changes in observed incremental voltage drop. Such changes in voltage drop should be considered normal. Should such variations in voltage drop occur which are different than expected, a comparison with the voltage drop across the corresponding turns of adjacent poles will help in determining if the variation is normal or not.

8.1.8 Flux probe

This procedure was originally an off-line test. It has evolved to the state where it is now an on-line test; therefore, it is beyond the scope of this document.

8.2 Rotor mechanical components

8.2.1 Rotor visual inspection

Visual inspections are of great importance in evaluating rotors since many of the deterioration mechanisms will leave tell-tale signs such as displacement, dust, distortion and broken components.

Copyright © 2005 IEEE. All rights reserved.

Copyright The Institute of Electrical and Electronics Engineers, Inc.
Provided by IHS under license with IEEE
No reproduction or networking permitted without license from IHS
Not for Resale

8.2.1.1 Visual inspection—cylindrical rotor

If retaining rings are not removed, inspection of end portion of the winding is difficult. On some designs, limited access can be obtained by use of mirrors. Most designs will give some access to borescope inspection, and this inspection is tedious and time-consuming. Interpreting the borescope views is challenging because of distortion, uncertainties of location, and limitations of perspective.

Check so far as accessible for coil displacements or deformation, turn displacements, contamination build-up, turn and slot insulation displacement and cracks, shifted or missing blocking and baffling, arcing or burning between conductors (coils, turns, leads) and ground.

With retaining rings and insulation removed, access is good and inspection can be quite complete.

On direct ventilated fields, inspection can be made through the ventilation holes in the wedges on the body portion of the field. Valuable information may be found relative to copper dust generation, foreign material contamination build-up, and displacement of turn insulation and/or copper.

Field thermal sensitivity: Field vibration often is associated with thermal sensitivity and non- symmetric flux. No matter how carefully the field is mechanically balanced, both static and dynamically, operation may be jeopardized by a thermally-generated vibration vector. There are numerous possible design, operation and/or service related causes for these vectors, which may be linear or non-linear in nature. Linear vectors are directly related to field current, both increase and decrease together. Non-linear vectors increase with field current, but lock-in and tend not to decrease with field reduction.

Wedges: Mechanical forces due to centrifugal loading are exceptionally high, leading to the possibility of distortion and cracking of dovetails. In addition, flow of negative sequence and slip frequency induced rotor currents may have occurred. These currents are associated with unbalanced stator current loading, synchronization error, or operation without field current. Effects are sometimes readily apparent, although interpretation of extent of damage may be difficult. Cyclic operation tends to move the wedges axially, and on some design configurations this may be a serious problem, particularly if these induced rotor currents have flowed and damaged the retaining rings and wedge groove fit.

Rotor Forgings: Rotor forgings are subject to rust, negative sequence and slip frequency induced rotor current overheating or burning, mechanical damage from foreign objects, and in extreme but rare cases, cracking of forging. Inspection is time-consuming and essential.

Retaining Rings: The retaining rings are the highest mechanically stressed part of the machine. Stresses on the shrink fits may be as high at standstill as at running speed. Because of the extreme mechanical duty, exceptionally high strength steel alloys are used. Certain of these materials, notably the 18-5 manganese-chromium alloy, are subject to stress corrosion cracking. Also, rings are subject to mechanical damage from negative sequence and slip frequency induced rotor current, foreign objects, mishandling, and movement on fits. Inspection should be performed by experienced personnel. Extreme care should be observed so as not to contaminate, scratch or otherwise damage the rings during inspection.

End Winding: The portion of the field winding under the retaining rings is subject to exceptionally high mechanical and electrical duties. There is opportunity for turn insulation and coil blocking to move or otherwise deteriorate. Either of these problems can result in shorted turns (which will increase required excitation current and may cause thermal sensitivity), and blocked ventilation passages (which can cause both thermal sensitivity and localized over-temperature). Movement of blocking can also cause mechanical unbalance and result in turn or coil distortion. Loose, but mechanically captured, end turn blocking may not be cause for concern. Turn and/or coil distortion may also result from thermal gradients causing the conductors to yield and also from high friction coefficients between conductors and the insulation components. Cracking of turn or retaining ring insulation may occur and will be difficult to detect visually without sophisticated inspection tools.

Copyright © 2005 IEEE. All rights reserved.
Copyright The Institute of Electrical and Electronics Engineers, Inc.
Provided by IHS under license with IEEE
No reproduction or networking permitted without license from IHS
Not for Resale

Contamination under the retaining rings is a particular problem on air cooled machines, but may also occur on machines with closed ventilation systems including hydrogen cooled generators. On open ventilated machines, contamination build-up rate is likely to be high even with good filter systems. On sealed machines, contamination may also occur from worn insulation or metallic components, and from oil or water leaks; also build-up of harmful outside ambient dirt, i.e. coal dust, may develop over the years in heavily contaminated sites.

Electrical conductors may crack or otherwise deteriorate throughout the field winding, but particularly in the region under the retaining rings. Skill and care, and the right equipment, can facilitate a good inspection for many of the possible abnormalities.

Because of the numerous possible areas of deterioration and problems, and the inherent difficulties in performing an adequate inspection, inspection of the field end windings is a particular challenge requiring the patience of a skilled, properly equipped operator.

Locks and Fits: Looseness or movement can develop on the numerous mechanical joints of a field, i.e. shrink fits, wedges and balance weights. A careful inspection of all locations for fretting or mechanical displacement may reveal difficulties.

Winding Slots: On most field designs since the 1970s, insulation integrity relies heavily on an extensive network of electrical creepage paths in the slot region as well as under the retaining rings. Inspection can be made for general contamination buildup, but detection of winding grounds or shorted turns will require electrical testing.

Proper gas flow relies on the numerous passages not being blocked by component movement or foreign material. Blockage is likely to be non-uniform, and may be the cause of the field becoming thermally sensitive, or generally overheated. Access to many of these ventilation passages is limited, but inspection of those areas that can be reached will give a good assessment of overall conditions, and may detect foreign material or out-of-location insulation sections which are closing off passages. Inspection is tedious and time-consuming, but necessary.

Collector and Connections: Most areas of the collector are accessible. The collectors should be carefully inspected for depth and uniformity of surface wear, surface etching and burning, insulation contamination and cracks, arcing or burning of insulation and metallic parts and mechanical damage. Access to the connections between the connector rings and the field winding is limited. Nonetheless it is important that visible components be checked for cracks, contamination, deformation, overheating or burning, and mechanical damage. Particular care should be focused on borescope check of accessible connections under the retaining ring. Remaining groove depth is a good indication of the remaining life of the collector rings.

Shaft Journals, Thrust Runners and Hydrogen Seal Surfaces: Rotor journals, thrust runners and hydrogen seal areas should be inspected for grooves caused by hard foreign particles becoming lodged in the babbitt of the bearing. some grooving is normal, but excessively large grooves can cause wear of the bearing babbitt, poor oil distribution and improper loading. Any bearings surface which has a frosted or etched looking surface is an indication of current flow through the bearing. In such cases, the bearing insulation system has failed and the shaft grounding system may not be in proper working order.

Rotating Rectifier: Many of the components are accessible and can be visually inspected. The design is susceptible to problems with cleanliness, loose or failing connections, open components, mechanical damage and rust.

Balance Weights: These must remain tight and well locked against possible movement. Verify the anchoring mechanisms are secure. If the weights shift (during low speed rotation), field mechanical balance will be affected, and should a weight migrate away from its intended position, there is the possibility of its being thrown clear due to the high centrifugal forces.

Copyright © 2005 IEEE. All rights reserved.

Copyright The Institute of Electrical and Electronics Engineers, Inc.
Provided by IHS under license with IEEE
No reproduction or networking permitted without license from IHS
Not for Resale

Fans/Compressors: Fan configuration varies greatly between machine sizes and manufacturer practice. High mechanical duty on the fan requires that the components not be damaged mechanically, and that all attachments within the fan and between the fan and the rotating field are secure. Welds should be inspected. Visual inspection is a powerful first step in the assessment of fan condition; non-destructive examination should follow.

Couplings: Couplings should be examined for service damaged bolt holes, flexible element wear, bolts, locks, distorted keyways and fits. Distorted components are a good indicator of a torsional event. Should such distorted components be observed, a complete disassembly and inspection of the machine is highly recommended. Special attention should be paid to the condition of retaining ring fits, slot wedges, rotor end turns and stator winding end turns.

8.2.1.2 Visual inspection—salient pole rotor

The mechanical components of the salient pole rotor are subjected to the normal running stresses of the machine and can be subjected to the much greater forces associated with line faults and improper phasing of the unit. A detailed inspection of all rotor mechanical components should be part of any unit inspection.

Coil Braces: The coil braces are blocks located between adjacent poles. They should be inspected for tightness, and the bolting which secures the blocks should be checked for proper torque if any evidence of block looseness is detected.

Pole tips: The pole tips (caps) should be inspected for any signs of overheating. Overheating can be due to a variety of factors including reactive stator current flow, and alignment in both the axial and radial directions.

Key bars: The key bars should be inspected for movement or fretting. Relative heights of all key bars should be compared, and those which are different should be carefully examined.

Shaft: The shaft should be checked for excessive runout, signs of distress and overheating of guide bearing journals and thrust runners. The coupling interface with the turbine and with the exciter should be checked for correctly tightened bolting and signs of distress. Match marks on the coupling halves between the turbine and generator should be checked for alignment.

Spider: The spider fit to the shaft should be checked for signs of movement or fretting. Any keys and key way fits should be inspected for signs of movement or distortion. Fabrication welds of the spider should be visually inspected for cracks. The attachments of the spider to the rim iron should be inspected for signs of looseness. Any locking keys used at this interface should be inspected.

Rim Iron: Rim iron is usually fabricated of laminated steel plate, which must be locked in place radially, axially and circumferentially. The rim iron should be checked to assure that it is secure in all three axis of possible movement. It should be inspected for distortion and fretting at the key bar locations, pole piece dove tail interface, and the connection to the spider.

Blowers: Blowers should be inspected for signs of distress such as cracking, evidence of impact, or discoloration due to heating. Hardware should be checked for tightness.

Brake Rings: The brake ring should be inspected for wear, cracks, heating, and hardware looseness.

Collector and Connections: Most areas of the collector are accessible. The collectors should be carefully inspected for depth and uniformity of surface wear, surface etching and burning, insulation contamination and cracks, arcing or burning of insulation and metallic parts, deformation and mechanical damage. For collectors with grooves, the remaining groove depth is a good indication of the remaining life of the collector rings.

Copyright © 2005 IEEE. All rights reserved.
Copyright The Institute of Electrical and Electronics Engineers, Inc.
Provided by IHS under license with IEEE
No reproduction or networking permitted without license from IHS Not for Resale

Balance Weights: The balance weights should remain tight and well locked against possible movement. Verify the anchoring mechanisms are secure.

8.2.2 Rotor mechanical components—ultrasonic test

Ultrasonic tests are performed on machine components to detect voids, cracks and inclusions in the various metal components. The following procedure describes testing of the machine components most frequently tested with ultrasonic techniques.

8.2.2.1 Discussion

Voids or cracks in critical machine components can lead to failures, which are catastrophic in nature. Those which are most serious are those located in rotating components which are under high mechanical stress. Such imperfections can grow in size over a period of time, eventually causing a rotating component failure. Other parts of the machine which are important to have void free are the brazed electrical connections. Voids in the bonding braze of these connections will cause high resistance joints that may overheat and lead to failure in service.

Retaining rings and the rotor forging of cylindrical rotor machines are two components which operate under high mechanical stress and are frequently tested using ultrasonic techniques. Stator winding series, phase and main lead connections are the most commonly tested electrical components during a winding installation.

8.2.2.2 Supporting documentation

The following documentation should be available before the tests begin:

- drawings indicating the precise geometric shape of the component being tested
- documents indicating the type of alloy and grain structure of the components being tested
- prior test documents
- specific NDE procedure

8.2.2.3 Test intervals

These types of tests are usually performed as a result of a recommendation from the machine manufacturer. Frequency, method, and components to be tested are usually outlined in such recommendations.

8.2.2.4 Precautions

The types of components being tested are frequently made of very high strength alloys. Such alloys exhibit some unusual properties and can be easily damaged. Care should be taken to understand the properties of the material with respect to the effects certain cleaning agents and processes may have on it.

8.2.2.5 Procedure

Since this type of test should be performed by specialists in NDE practices, the procedure is largely governed by their proven techniques. It should be noted, however, that on large components, such as retaining rings and rotor forgings, only a computer controlled sensing technique produces an accurate and searching test. A sensor can miss detecting a major flaw if it is shifted only a few thousandths of a centimeter from the optimum position for sensing a flaw. This makes any sensor positioning technique other than that controlled by a computer very unreliable.

Ultrasonic testing works on the principal that sound transmitted through metal will be reflected by the far surface of the metal. This far surface may be the far surface of the component or the near surface of a

Copyright © 2005 IEEE. All rights reserved.

Copyright The Institute of Electrical and Electronics Engineers, Inc.
Provided by IHS under license with IEEE
No reproduction or networking permitted without license from IHS
Not for Resale

subsurface flaw. For this reason, knowledge of the component being tested is required so that the operator can tell the difference.

The ultrasonic testing of retaining rings present some significant challenges. Typically, the non-magnetic material of a retaining ring has very high sound attenuation. This means much of the sound transmitted is lost in the material between the transmitter and the reflecting surfaces. The very nature of a crack initiated by stress corrosion is such that it is very difficult to locate. Very small cracks are more significant in a retaining ring than in most other components. The shrink fit interface between a retaining ring and a rotor forging produces some confusing reflections.

8.2.2.6 Interpretation

The recommended action to take for any given imperfection or group of imperfections is dependent on where they are relative to the stresses in the material, the type of material, the physical relationship of the imperfections to each other and their size. Such actions range from taking no corrective action to scrapping the component under test. Generally, though, the recommended action lies between these two extremes and consists of some degree of surface grinding to remove the imperfections. It is very important to consult the manufacturer when evaluating these types of NDE results.

8.2.3 Rotor mechanical components—eddy current test

8.2.3.1 Discussion

Eddy current tests are performed on machine components to detect voids, cracks, corrosion and inclusions in the various metal components. The following describes testing of the machine components most frequently tested with eddy current techniques.

Eddy currents are closed loops of induced current circulating in planes near the surface adjacent to the excitation coil. The depth of penetration decreases with an increase in the test frequency and is a function of the electrical conductivity and magnetic permeability of the specimen tested. Voids or cracks in critical machine components can lead to failures which are catastrophic in nature. Those which are most serious are those located in rotating components which are under high mechanical stress, such as retaining rings and rotor teeth. Such imperfections can grow in size over a period of time, eventually causing a rotating component failure. Stationary components such as cooler tubes may also be tested using eddy current techniques.

8.2.3.2 Responsibilities (qualifications)

Eddy current testing is a very specialized operation and only those who have been specifically trained in the process should perform such work.

8.2.3.3 Supporting documentation

a) Drawings indicating the precise geometric shape of the component being tested.

b) Documents indicating the type of alloy and grain structure of the components being tested.

c) Prior test documents.

8.2.3.4 Time interval

These types of tests are usually the result of a recommendation from the machine manufacturer. Frequency, method and components to be tested are usually outlined in such recommendations.

Copyright © 2005 IEEE. All rights reserved.
Copyright The Institute of Electrical and Electronics Engineers, Inc.
Provided by IHS under license with IEEE
No reproduction or networking permitted without license from IHS Not for Resale

8.2.3.5 Precautions

The types of components being tested are frequently made of some very high strength alloys. Such alloys exhibit some unusual properties and can be easily damaged. Care should be taken to understand the properties of the material with respect to the effects certain cleaning agents and processes may have on it.

8.2.3.6 Procedure

Since this type of test should be performed by specialists in NDE (Non Destructive Examination) practices, the procedure is largely governed by their proven techniques. Eddy current testing is based on inducing electrical currents in the material being inspected and observing the interaction between those currents and the material. Eddy currents are generated by electromagnetic coils in the test probe and monitored simultaneously by measuring probe electrical impedance. Since it is an electromagnetic induction process, direct electrical contact with the sample is not required; however the sample material has to be conductive. Eddy current testing can be performed on both non-magnetic and ferromagnetic materials, although inspection of ferromagnetic materials requires special probes and techniques.

Basic eddy current test equipment consists of:

— an alternating current source (oscillator)

— a probe containing a coil connected to the current source, and

— a voltmeter which measures the voltage change across the coil.

The oscillator should be capable of generating a time varying sinusoidal current at frequencies ranging from about 1 kHz to about 2 MHz. Oscillators which operate with pulsed currents are used for specialized applications.

The coil within the probe is an insulated copper wire wound onto a suitable form. The wire diameter, the number of turns and coil dimensions are all variables which should be determined in order to obtain the desired inspection results. Depending on the type of inspection, an eddy current probe can consist of:

a) a single test coil; or

b) an excitation coil with a separate receiver (sensing) coil; or

c) an excitation coil with a Hall-effect sensing detector.

The voltmeter measures the changes in voltage across the coil which result from changes in the electrical conditions and properties of the conducting material tested and/or changes in relative position between the coil and the material tested. This voltage change consists of an amplitude variation and relates to the size of the defect. A phase variation relative to the current passing through the coil indicates the location of the defect. Usually an oscilloscope is used to display the voltage variations.

Inspection systems calibration is crucial. Calibration is usually performed using calibration standards of the same material and geometry as the test item. The calibration standards have artificial defects of various sizes machined into the standard that are representative of defects expected in the component. The voltage, amplitude and phase signals from the artificial defects in the calibration standard are used to relate inspection results to defect size, shape, and location.

8.2.3.7 Interpretation

The recommended action to take for any given imperfection or group of imperfections is dependent on where they are relative to the stresses in the material, the type of material, the physical relationship of the imperfections to each other and their size. Such actions range from taking no corrective action to scrapping the component under test. It is very important to consult the machine manufacturer when evaluating these types of NDE results.

Copyright © 2005 IEEE. All rights reserved.

Copyright The Institute of Electrical and Electronics Engineers, Inc.
Provided by IHS under license with IEEE
No reproduction or networking permitted without license from IHS
Not for Resale

8.2.4 Rotor mechanical components—dye penetrant test

The following procedure applies to dye penetrant testing of highly stressed mechanical components in a rotating machine. Generally, this test is limited to testing retaining rings, but may be used on blower hubs, zone rings, rotor slot wedges and other highly stressed components.

8.2.4.1 Discussion

Generator field retaining rings and similar rotating parts which are subjected to high mechanical stress may be subject to fracturing and catastrophic failure. As a result of such failures, retaining rings have been the object of an intensive testing program over the past few years. Many of these retaining rings are made of a stainless steel material which does not lend itself to magnetic particle testing. This same stainless steel, which was used widely for retaining ring material during the 1960's and 1970's, has been found to be very susceptible to stress corrosion cracking. This type of crack propagates to a critical size under certain atmospheric conditions. For this reason, various testing procedures have been developed for testing retaining rings and dye penetrant is one of the most widely used for that purpose. The other highly stressed rotating components are frequently dye penetrant tested as well.

There are two commonly used types of dye penetrant. There is the fluorescent type and non-fluorescent type. Both work the same way except that the fluorescent type can detect smaller imperfections. Using an ultraviolet lamp, minute quantities of the fluorescent dye can be observed.

8.2.4.2 Caution

The types of components being tested are usually made of very high strength alloys. Such alloys exhibit some unusual properties and can be easily damaged. Care should be taken to understand the properties of the material and all cleaning activities should be planned such that any risk to the material is minimized.

8.2.4.3 References

Past inspection reports.

8.2.4.4 Test intervals

These types of tests are usually the result of a recommendation from the machine manufacturer. Frequency, method and components to be tested are usually outlined in such recommendations.

8.2.4.5 Procedure

Any dye penetrant process starts with a thorough cleaning of the piece to be checked for cracks or pits. Paint, corrosion or any other surface coating must be removed. The bare metal should be exposed and have no surface contamination. This final cleaning is done with a special solvent which is compatible with the material and the dye.

At this point, the metal is coated with a dye. This dye has the ability to penetrate microscopic pits and cracks in the metal surface. After the dye is allowed to penetrate the surface for the time prescribed by the dye manufacturer, all traces of the dye are wiped from the surface of the metal. This is done with a clean rag lightly dampened with the special cleaning solvent. Solvents are not used which can flush the dye from the subsurface cracks and pits. At this time, the metal surface should show no evidence of there having been dye applied to it. The metal surface is then coated with a light colored dye absorbing material (developer). This is usually applied by means of a spray applicator. The absorbent coating sticks to the metal surface and wicks the colored dye penetrant from the pits and cracks in the metal surface. Pits and cracks will be observed as colored stains in the developer. The general shape of cracks can be observed and pits are observed as round stains. An idea of the depth of an imperfection can be estimated by observing the amount

Copyright © 2005 IEEE. All rights reserved.
Copyright The Institute of Electrical and Electronics Engineers, Inc.
Provided by IHS under license with IEEE
No reproduction or networking permitted without license from IHS Not for Resale

of dye being wicked from it. The developer may become saturated if a particularly deep imperfection is encountered. In such cases, the developer may be wiped from the surface, a new coating of the developer applied and the inspector may continue to observe dye wicking from the imperfection. Some dye is specially formulated to fluoresce when exposed to ultraviolet light. For this reason, the wicking action is observed under the rays of an ultraviolet lamp. Due to the inspector being able to detect a much smaller amount of the fluorescent dye, use of the fluorescent penetrant results in a much more searching test.

8.2.4.6 Interpretation

The recommended action to take for any given imperfection or group of imperfections is dependent on where they are relative to the stresses in the material, the type of material, the physical relationship of the imperfections to each other and their size. Such actions range from taking no corrective action to scrapping the component under test. Generally, though, the recommended action lies between these two extremes and consists of some degree of surface grinding to remove the imperfections. It is very important to consult the machine manufacturer when evaluating these types of NDE results.

8.2.5 Rotor bore leak test

This procedure is used to pressure test the machine rotor cavity to detect leakage at the seals of the radial leads. These machines use hydrogen gas as a coolant and if it were allowed to escape would create an explosive situation. If the rotor is not removed, this test should be performed with the machine degassed.

8.2.5.1 Discussion

Most radial leads consist of a radial conductor which is insulated and surrounded with neoprene seals which mechanically block the hydrogen gas from entering the rotor cavity.

Some deterioration of the seals and insulation may occur over time and leaks may appear. Routine testing at major outages is recommended to detect and repair these leaks. On shafts which do not have plugs on the lead end, test covers must be installed to make the test.

The integrity of the radial lead assemblies may be checked by applying dry nitrogen gas or dry instrument air at a suitable pressure to the rotor cavity and observing the decay of pressure over a time period. Suggested test pressures are listed in Table 6; however, OEM recommendations should be observed where available.

Table 6—Suggested test pressures

Max Rated Machine Nameplate Gas Pressure	Lead Assembly Test Pressure
Up to 310 kPa	700 kPa
Above 310 kPa	1400 kPa

(English units)

Max Rated Machine Nameplate Gas Pressure	Lead Assembly Test Pressure
Up to 45 PSIG	100 PSIG
Above 45 PSIG	200 PSIG

Copyright © 2005 IEEE. All rights reserved.

Copyright The Institute of Electrical and Electronics Engineers, Inc.
Provided by IHS under license with IEEE
No reproduction or networking permitted without license from IHS
Not for Resale

8.2.5.2 Procedure

The threaded pipe plug should be removed from the collector or exciter end of the generator rotor or test plate. The threaded hole should be checked for thread integrity and debris and cleaned if required.

The gauge valve should be kept closed.

The air or nitrogen source should be attached and the pressure increased up to test pressure with the feed and test rig valves open. When the test pressure is reached, the feed valve is closed and the external plumbing is tested for leaks using liquid leak detectors. Leaks should be repaired as required.

After a temperature stabilization time of 45 min, the test pressure should be reestablished and the feed and test rig valves should be closed. The pressure should be observed over a one hour period. Any observable leakage rate is unsatisfactory and the leak should be located and repaired.

8.2.5.3 Leak detection

There are three basic methods used for leak detection. These include sonic testing, soap solution, and detectable gas methods.

a) A soap solution consisting of 5% of non-polar detergent in distilled water can be used on insulated parts as well as the shaft plugs.

b) Leaks may be detected by the use of sonic test instruments. The probe is moved to the location where the sound is maximized at the lowest sensitivity level.

c) The detectable gas test employs the use of several ounces of a tracer gas which is introduced into the rotor cavity and then pressurized to the test level by nitrogen or air. The appropriate tracer gas detector instrument should be used to locate the leak.

8.2.5.4 Test equipment

— tracer gas leak detector

— sonic leak detector

— pressure test rig

8.3 Rotor damper winding

Salient poles are frequently equipped with a damper (amortisseur) winding often consisting of copper bearing conductor bars recessed in slots in the pole face, and brazed at both ends to a shorting bar.

Cylindrical rotors frequently have partial or full amortisseur windings. They are usually located under the rotor slot wedges and retaining rings; therefore, they are not accessible to test.

There are some new designs of cylindrical rotor generators being manufactured specifically for use with solid state starting combustion turbine applications. Such rotors are equipped with more robust amortisseur windings than are found on typical cylindrical rotors. Refer to the equipment manufacturer for recommended specific tests.

8.3.1 Rotor damper visual inspection

This subclause pertains to the inspection of the damper bars (amortisseur winding) of salient pole machines.

--`,,`,`,-`-`,,`,,`,`,`,---
Copyright © 2005 IEEE. All rights reserved.
Copyright The Institute of Electrical and Electronics Engineers, Inc.
Provided by IHS under license with IEEE
No reproduction or networking permitted without license from IHS
Not for Resale

Damper windings (amortisseur windings) may operate for periods of time at high temperatures and are subjected to high centrifugal force loading. These windings, as well as their connections, should be inspected as outlined in 8.3.1.

In the case of continuous (amortisseur) windings there will be interconnections between the damper winding shorting bars of adjacent poles at both ends of the pole. These interconnections may take the form of solid copper bars, copper alloy leaves or braided copper jumpers. These should be inspected periodically for signs of fracture.

A variety of bolting arrangements are possible for attaching the interconnection jumpers to the contact pads of the damper winding of adjacent poles. If these connections deteriorate, pitting will occur at the contact point and there will often be obvious signs of overheating. Interconnections should be checked for signs of overheating, mechanical damage, and loose components. Bolted amortisseur connections should be checked for required torque and captive hardware. These connections are generally longer than interpole connections and should be inspected for stresses due to centrifugal force.

Pole faces should be examined for surface damage, overheating, and damper bar overheating. If damper bars are enclosed in slots, significant overheating will show up as a shadow on the pole face. Damper bars should be tight in their slots and have no signs of axial movement in the pole faces.

Damper shorting bars should be inspected for signs of cracking or distortion. If the bar is distorted, it could be due to unequal damper bar movements caused by high current flows of unequal distribution between bars. Brazed joints connecting damper bars to shorting bars should be carefully examined for any breaks or cracks.

8.3.2 Rotor damper winding integrity

This subclause pertains to the testing of the damper bars (amortisseur winding) of salient pole machines.

8.3.2.1 Discussion

Salient poles are frequently equipped with a damper (amortisseur) winding consisting of conductor bars recessed in the pole face, and joined at each end to a shorting bar. Under certain operating conditions these bars carry very heavy currents. The heat generated by heavy currents causes thermal expansion of the bars relative to the pole faces and also produces mechanical stress at the electrical connection points joining the bars at the pole ends.

8.3.2.2 Precautions

Electrical tests that can be used to determine the integrity of damper windings consist of low voltage (less than 24 V dc) tests at relatively high currents (typically 100 A). Test results are very dependent on the number of parallel current paths involved in the test. Precautions should be taken to determine, and in some cases limit, the number of parallel current paths. This should be done to insure sufficient current flow to test the electrical connection.

8.3.2.3 References

Test records of previous test results while performing the same test.

8.3.2.4 Procedure

Electrical tests are performed using a four terminal, high current (typically 100 A) dc low resistance measuring device capable of reading in the microhm range.

--`,,`,`-`-`,,`,,`,`,,`---
Copyright © 2005 IEEE. All rights reserved.

Copyright The Institute of Electrical and Electronics Engineers, Inc.
Provided by IHS under license with IEEE
No reproduction or networking permitted without license from IHS Not for Resale

A four terminal resistance measurement between the shorting bars at both ends of the pole, using a high current microhmmeter, may be useful in detecting cracked damper bars or poorly brazed connections. A questionable pole will have a significantly higher resistance reading than other poles. A spare pole which has never been in service can be used as a reference. If the installation has continuous damper winding connections, i.e. interconnection of the damper windings of adjacent poles, these will have to be disconnected to facilitate resistance measurements on the damper bars of individual poles.

8.3.2.5 Damper bar integrity by ultrasonic inspection

The vertical damper bars located in the pole face can also be tested for cracks by using a small ultrasonic transducer. The bars should be tested from each end and may need to be cleaned on the ends before testing. Refer to 8.2.2.5 for further general instruction on this type of testing.

9. Inspection and test techniques—AC machine assembly

The assembly clause is intended to cover those components not covered above in the stator and rotor winding subclauses.

9.1 General

9.1.1 Visual inspection

9.1.1.1 Frame and structure

The frame structure, main lead box mounting, baffles, gas ducts and internal piping should be inspected for cracked welds. In addition to a visual inspection, a non-destructive examination may be appropriate. If excess hydrogen leakage is reported during operation, points of leakage should be determined, if possible, before the unit is dismantled for inspection. These areas should be inspected for the cause of the leakage.

9.1.1.2 High voltage bushings and stand-off insulators

Normal operating thermal and vibrational forces, which are substantial, may deteriorate the bond between porcelain and metallic flange. Lack of bond consolidation can be detected by dusting, greasing, or in some cases by minute leak detection. The seal gaskets should be checked for sealing compound leakage. Close inspection is necessary to determine extent of physical damage, overheating or other forms of deterioration, which may have occurred. Gas cooled bushings should be checked for lubricating oil in the cooling passages.

9.1.1.3 Current transformers

High operating temperatures, aggravated by ventilation restrictions, can lead to overheating and turn-turn short problems. Inspection with good lighting conditions should be performed. Vibration of the transformer while in service can loosen electrical connections to its leads. Such loose connections may cause unwanted relay action. High temperatures in this area can also cause degradation of connection wire insulation.

9.1.1.4 Hydrogen seals

Since the seals are a primary source of oil entry into the machine, mechanical fits are critical and inherently difficult to confirm by examination. Hydrogen seals are subject to most of the deterioration mechanisms of journal bearings, in one form or another. Inspection should be made to confirm that clearances are correct and that seal components are not scored, binding or otherwise defective.

Copyright © 2005 IEEE. All rights reserved.
Copyright The Institute of Electrical and Electronics Engineers, Inc.
Provided by IHS under license with IEEE
No reproduction or networking permitted without license from IHS Not for Resale

9.1.1.5 Hydrogen seal and bearing insulation integrity

Performance is dependent on maintaining adequate creepage surface lengths and freedom of surfaces from conductive contamination and that insulation is intact and kept dry. Prior to testing, careful inspection of the insulation is essential.

9.1.1.6 Noise

For reported noise, attention may be directed to vibrating piping, gas/air ducts and baffles, vibrating stator bars, spring mounting between frame and core assembly, the core assembly itself, excess field vibration, frame components, coolers, and frame foot shims.

9.1.1.7 Main lead box inspection

The main lead box should be inspected for:

- cracked porcelain, insulation surface contamination of bushings or oil leakage (in the case of oil filled bushings)
- leaking of bushing sealing compound
- overheating of connecting shunts
- cracks or distress in stand off main lead support insulators
- ventilation obstructions within lead box
- cracks in lead box supporting structure, lead box or current transformer mounting assembly

9.1.1.8 Grounding brush

On units with grounding brushes, inspect the brush assembly for the following:

- brush is present and in good condition
- copper braids are not severely frayed
- carbon brushes are not cracked or broken
- shaft is not glazed
- brushes move freely in their brush boxes

9.1.1.9 Instrumentation

Resistance temperature detectors and thermocouples, and their associated wiring, tend to be located in areas where they may be easily damaged. The damage may be obvious, but judgment is necessary to avoid replacement of RTDs with only minor damage. Other instrumentation is also subject to mechanical damage and should be carefully inspected.

9.1.1.10 Coolers

Coolers in hydrogen atmosphere machines tend to remain clean; in air cooled machines, contamination often is a major problem. Tubes can become loose and vibrate in their tube sheets causing a reduction in tube wall thickness. The many tube connections make cooler leaks a concern. If leaking has occurred, deposits of water impurities may be found on the stator winding, in addition to standing water in the frame if leakage is substantial. In some hydrogen cooled machines, contamination by lead carbonate, due to the reaction between water, lead in the solder, and carbon dioxide is a source of equipment hazard, as well as personnel hazard. This can be recognized as an adhering, greenish-to-white, salt deposit. A sample should be analyzed by a qualified lab. Appropriate clean up procedures should be taken to assure protection of personnel.

Copyright © 2005 IEEE. All rights reserved.

Copyright The Institute of Electrical and Electronics Engineers, Inc.
Provided by IHS under license with IEEE
No reproduction or networking permitted without license from IHS
Not for Resale

9.1.2 Air gap measurement visual

The following pertains to the measurement of the stator to field pole air gap in salient pole machines.

9.1.2.1 Discussion

Various parts of a rotating machine can physically shift in position such that the rotating field poles do not have the same air gap with the stator. The stack of stator core iron can tilt or become non-circular. The field poles can extend more or less into the air gap due to improper attachment with the rim iron or distortion of the rim iron. When large variations in air gap occur, there may be an unacceptable variation in the three phase terminal voltages. Unequal air gaps can also result in high circulating currents between parallel circuits of any given phase winding.

9.1.2.2 Precautions

Since an unequal air gap may be the result of problems with either the rotor or the stator, interpretation of results have to be considered carefully to determine which may be contributing to an unequal air gap.

9.1.2.3 References

Air gap values should be available in plant data documentation.

9.1.2.4 Procedure

An accurate air gap measurement should be made at the top and the bottom of each pole face. The rotor should then be rotated through 180 degrees and the measurements repeated. A profile of the stator can be obtained by measuring the air gap at the top and bottom of one pole face. The rotor is then rotated through 360 degrees taking repeated air gap measurements at a minimum of eight positions around the stator. A simple plumb bob test can be made on vertical shaft machines to get an approximate indication of how vertical the stator iron stack is. Should no plant documentation be available indicating acceptance tolerance for air gap variation, a variation of no more than 10% from the average can be used.

9.1.3 Cooler leak test

9.1.3.1 Discussion

Hydrogen coolers are used in hydrogen cooled machines as hydrogen-to-water heat exchangers. Similarly, air coolers are used on salient pole hydromachines and air cooled turbo-generators as air-to-water heat exchangers. These coolers cool internal machine components through the transfer of heat to an external cooling water supply. Although these coolers are stationary components they are exposed to relatively high velocity fluid flow on both the gas or air and water sides. Coolers for a large hydrogen cooled machine can require more than 34 000 liters (9000 gallons) per minute of water flow and high gas velocities in order to provide the required heat transfer.

Most coolers consist of bundles of finned copper alloy tubes which extend from the top to the bottom of the machine. Some coolers are mounted in the horizontal position. Horizontal coolers are tested differently from vertical coolers in hydrogen cooled machines. When testing hydrogen cooled machines, this test can be performed with the coolers in place (for vertical coolers) but the machine should first be purged of hydrogen gas.

9.1.3.2 Frequency

Cooler leak tests should be performed during major machine overhauls, after coolers are cleaned and when it is desired that a known leak be isolated to a particular tube.

Copyright © 2005 IEEE. All rights reserved.
Copyright The Institute of Electrical and Electronics Engineers, Inc.
Provided by IHS under license with IEEE
No reproduction or networking permitted without license from IHS Not for Resale

9.1.3.3 Procedure

Leak testing of horizontal coolers and all coolers used in air cooled machines can be accomplished with either a global leak test or a test for isolating leaks to a single tube. Should a cooler fail the global leak test, the single tube isolation test should be performed. The global leak test consist of blanking off all inlet and outlet piping associated with the coolers and applying hydrostatic pressure with clean water to the water side of the tubes. A pressure decay indicates the presence of a tube leak. In performing the single tube isolation test, the inlet, outlet and reversing chambers must be removed from the coolers. With access to both ends of the bundles, a hydrostatic test is applied to the water side of each tube individually. A decay in the hydrostatic test pressure indicates the presence of a leak in that particular tube.

Vertical coolers for hydrogen cooled machines can be leak tested in place, off line and with the machine purged of hydrogen gas. The inlet and outlet cooler water supply valves must be closed. The reversing chambers on top of the coolers are removed to expose the open ends of tubes.

If the tubes are not already filled with water to the top, they should be filled using a clean water supply to a level slightly above the tube sheet. With the tubes full of water the machine is pressurized with dry instrument air to rated operating pressure of the machine. Leaks, if any, will be evident as bubbles of air coming from the top of the leaking tube.

9.1.4 Air leak test

9.1.4.1 Discussion

Hydrogen cooled turbo generators operate with an internal pressurized atmosphere of hydrogen gas. In order for the machine to contain this atmosphere it must be sealed to prevent gas leakage. The machine outer casing must be built to contain the internal hydrogen pressure. All openings in the casing such as lead penetrations, access ports and the ends of the machine should be covered with components capable of providing a gas tight seal. The two ends of the machine shaft emerge from the internal hydrogen atmosphere through oil pressurized hydrogen seal rings. Hydrogen cooled machines are rated for gauge gas pressures from 3.5 kPa to 517 kPa (0.5 psi to 75 psi). Even with a well-sealed machine there will be some loss of hydrogen due to small leaks and entrainment of the gas in the hydrogen seal oil system. In most systems entrained gas is later separated from the oil and vented to atmosphere. Including these losses, acceptable leak rates depend on the volume of the machine and the operating pressure. A large turbo-generator operating at 517 kPa (75 psi) of hydrogen may lose 3 m^3 (106 $feet^3$) of hydrogen per day through entrainment in oil alone. The machine manufacturer should be consulted to determine the maximum acceptable leak rates.

There are several techniques used to determine the extent of hydrogen loss and the locations of the associated leaks.

9.1.4.2 Precautions

- Any loss of hydrogen which is allowed to accumulate in a confined space such as an adjacent exciter house poses a very dangerous condition.
- Any air test should be conducted using verified dry instrument air.

9.1.4.3 Time pressure monitoring procedure

When a machine is assembled after an overhaul there is the potential for creating leaks around the many sealing surfaces. Prior to pressurizing the machine with hydrogen gas, it is pressurized with air and checked for leaks. This is commonly known as an air test. Two types of air tests are commonly used, the 24 hour test and the one hour test. The 24 hour test consists of pressurizing the machine to rated operating pressure and

Copyright © 2005 IEEE. All rights reserved.

Copyright The Institute of Electrical and Electronics Engineers, Inc.
Provided by IHS under license with IEEE
No reproduction or networking permitted without license from IHS
Not for Resale

isolating it from the air supply for a period of 24 hours. The hydrogen seal oil system must be in service and internal air temperatures measured at the beginning and end of the test. Since the outside environment such as sunlight shining on the machine casing affects the internal pressure, it is advisable to start and end the test sometime during the early morning hours. The pressure change of the internal atmosphere is the basis for determining the quantity of hydrogen that would have leaked during the same 24 hour time span. The difference of densities of air and hydrogen as well as any internal atmospheric temperature changes and external atmospheric pressure changes should be accounted for when determining the equivalent hydrogen leakage.

The relationship for making this conversion is as follows:

Using equivalent volumes of gas at standard temperature and pressure, hydrogen at 98% purity leaks at a rate 3.38 times the air leakage over an equivalent time period.

Calculating air leakage per test period (L):

$$L = [Vmachine]\left[\frac{(273 + Tstandard)}{Pstandard}\right]\left[\frac{(P1 + Bl)}{(273 + T1)} - \frac{(P2 + B2)}{(273 + T2)}\right]$$

Where:

L = Leakage in terms of volume at standard temperature and pressure for the entire test period (using dry air).

Vmachine = Static gas volume of the system

Tstandard = °C

Pstandard = 101.325 kPa or standard pressure expressed in the same units as P1 and P2

P1 = System pressure at the beginning of the test (gauge).

B1 = Barometric pressure at the beginning of the test.

T1 = System temperature in Celsius at the beginning of the test.

P2 = System pressure at the end of the test (gauge).

B2 = Barometric at the end of the test.

T2 = System temperature in Celsius at the end of the test.

All temperatures are in degrees Celsius and are measured using an average of the internal machine gas RTDs. Pressures must be expressed in the same units consistently for this equation, and the sum of the barometric pressure and gauge pressure must express an absolute pressure. The volume of the escaped gas will be expressed in the same units as used to express the machine volume.

NOTE—This equation assumes no change in ideal gas constant since the evaluated volume is at standard pressure and temperature. If the equation is used to compare air leakage versus hydrogen leakage at a non-standard pressure an adjustment must be made for the ideal gas constant.

9.1.4.4 Pressure comparison test procedure

The one hour test is the same as the 24 hour test except that the internal air atmospheric pressure is balanced against a standard pressure vessel placed inside the machine rather than against ambient outside atmospheric pressure. This is accomplished by temporarily placing a gas tight test cylinder inside the machine, and allowing the cylinder to assume the same initial pressure and temperature as the pressurized dry air atmosphere inside the machine. There are two ports on the cylinder, one is a valved port that allows the internal cylinder pressure to equalize with the machine pressure and the other port is connected to a

Copyright © 2005 IEEE. All rights reserved.
Copyright The Institute of Electrical and Electronics Engineers, Inc.
Provided by IHS under license with IEEE
No reproduction or networking permitted without license from IHS Not for Resale

manometer. The opposite end of the manometer is open to the internal machine air pressure. After initially equalizing the air pressures, the valved port is closed and the test starts. As air leaks from the machine casing, the pressure within the machine decreases relative to that in the cylinder and the manometer indicates pressure change. Knowing the calibration of the manometer test device and using the air to hydrogen conversion relationship used for the 24 hour test, the hydrogen leakage can be determined. Use of the cylinder has the advantage of taking less time to determine a leak rate than the 24 hour test.

The formula for the 24 hour test can be used for the 1 hour test. This formula may be simplified to exclude changes in barometric pressure and temperature.

9.1.4.5 Locating sources of leakage

If an unacceptable leak rate has been determined to exist, several methods can be used to locate the source of the leak. The most common method is to apply a small amount of leak detecting fluid on suspected areas and watch for the formation of bubbles. Such fluids are generally made of water, a soap solution and glycerin.

Another technique is to listen for air leaks with an ultrasonic listening device equipped with a directional microphone. Ultrasonic techniques tend to work best for high velocity leaks and soap works best for low velocity.

Freon gas has been used in the past to inject into the internal air atmosphere, (but at the present time this gas is not used for environmental reasons.)

Machines can be pressurized with a helium tracer in air and helium detectors used to locate the source of leaks. This is a sensitive test but it has the disadvantage of the detector being overwhelmed by helium if there are many or large leaks. In such case it can not pin point a leak source.

Frequently, the first indication of excessive hydrogen leakage is an observed increase in the hydrogen used to make up for the leaks. In locating such leaks the liquid leak detectors, ultrasonic detectors or combustible gas detectors are commonly used. Under no circumstances should any detection method involving a flame or the generation of a spark be used to locate hydrogen leaks.

A hydrogen vent test should be included as part of an air leak test when leakage past the hydrogen seals is suspected. This test consists of looking for tracer gases exiting the roof vent while using tracers in the air test.

9.2 Bearings

Horizontal turbine generators typically use sleeve or tilting pad bearings. Vertical hydromachines commonly use pad type thrust bearings and guide bearings.

9.2.1 Bearing visual inspection

Bearings are subject to deterioration due to mechanical wear, scoring, mechanical overloading (due to improper alignment), impact damage, inadequate oil flow (scoring and overheating), loss of bonding between babbitt and shell, and the presence of rust. Careful examination of the bearings needs to be made to determine the existence of such problems. In addition, the bearing shell seat needs to be examined for wear. Guide bearings should be examined for excessive wear at the points where the alignment mechanism contacts the bearing. Thrust bearings need to be examined for uneven wear of the bearing surfaces.

All bearings have the potential for damage if current is allowed to flow through the oil film between the babbitt and the shaft. Such damage is observed as an etching effect on both the bearing and the associated shaft. In some instances, mechanical fretting of the babbitt can have an appearance similar to the etching

Copyright © 2005 IEEE. All rights reserved.

Copyright The Institute of Electrical and Electronics Engineers, Inc.
Provided by IHS under license with IEEE
No reproduction or networking permitted without license from IHS
Not for Resale

from arcing. In order to differentiate between the two, replication with magnification will show the melted boundaries of arcing as opposed to the tearing found with fretting. Bearing insulation is normally provided to prevent circulating currents.

9.2.2 Bearing insulation test

The following procedure applies to the inspection and testing of insulated bearings.

9.2.2.1 Discussion

The rotating elements of rotating machines can have voltages induced in them due to magnetic unbalances within the machines. The rotating elements may also have voltages imposed on them through the couplings of connected machines (turbines and exciters). Since rotating elements of machines usually have a bearing at each end, a voltage imposed across the length of the element will cause current to flow through the bearings, end bells and frames to cause a complete circulating current path. As current passes through the bearing journals and the interfaces with their respective bearings, damage occurs to both the journal surfaces and the bearing surfaces. An etching effect is usually observed on the journal area and the bearing babbitt. In severe cases, the babbitt surface will be destroyed to the point of bearing failure. This type of failure can occur within hours after startup of a machine with high shaft voltages and uninsulated bearings.

In an effort to prevent circulating current flow through the bearings, one or both bearing seats are insulated. In addition, all other components which may provide a current path between the ends of the shaft through the frame are insulated, such as hydrogen shaft seals and oil deflectors. Grounding brushes are frequently used to shunt current around an intentionally grounded bearing.

9.2.2.2 References

— OEM recommendations for minimum resistance of bearing insulation

— Previous test results

9.2.2.3 Precautions

At various points, the quality of bearing insulation can be tested during assembly of the machine. Care should be taken to account for parallel current paths while making such tests.

9.2.2.4 Procedure

Using an insulation resistance tester, insulated bearings can be individually tested when machines are disassembled. (Double insulated bearings and hydrogen seals can be tested with the machine fully assembled.) Tests should be conducted at 500 V dc, or less if so recommended by the OEM, and a bearing in good condition should provide about 50 megohms resistance across it. Values as low as 1 megohm may be satisfactory if there is confidence the value will not further decrease.

A completely assembled machine with no intentionally grounded bearings should provide a minimum of 5 megohms (shaft to ground) when tested at 500 V dc. Care should be taken to assure that the shaft is not connected to adjacent shafts while this test is made.

In addition to bearing seat insulation, bearing pedestal insulation is sometimes used. When testing this insulation with an insulation resistance tester, the insulation of associated bearing oil piping and instrumentation connections are under test. The combined parallel resistance of these insulated components should be 5 megohms or greater when tested at 500 V dc.

--`,,`,,`,`,,`---`,,`,,`,`,,`---
Copyright © 2005 IEEE. All rights reserved.
Copyright The Institute of Electrical and Electronics Engineers, Inc.
Provided by IHS under license with IEEE
No reproduction or networking permitted without license from IHS
Not for Resale

A visual inspection of insulation components may reveal cracks in the insulation or contamination which will lead to poor performance and poor test results. These conditions should be corrected before testing and before the machine is returned to service.

9.2.3 Bearing—Mechanical

In addition to a careful visual examination, bearing diameters should be measured to assure correct internal diameter and roundness. These dimensions should be compared with diameter measurements of the shaft journals. Thrust bearings should be inspected for proper thickness, uneven wear of the thrust pads and excessive wear at the point of contact with the backing plate.

9.3 Brush rigging—inspection and test

9.3.1 Visual

Brush rigging and brushes should be inspected for the following signs of distress:

- contamination of insulated components
- burning
- poor connections
- cracked metallic or insulating components
- loose hardware
- weak or broken springs
- burning of boxes
- double facing of brushes
- chipping of the brushes

9.3.2 Collector brush rigging insulation

Brush rigging insulation can only be measured after the brushes have been lifted from the collector rings. In addition, cables connected to the brush rigging should be disconnected.

In order to obtain an accurate indication of the quality of the brush rigging insulation, the dust from the carbon brushes should be blown or wiped off the insulated components.

Brush rigging is built such that their positive and negative sections are insulated from each other and from ground. The most convenient way to test for the integrity of these insulation systems is to ground the part of the rigging associated with one polarity and measure from the other part of the rigging to ground. Then perform the test again with the other part of the rigging being tested to a ground reference.

The insulation resistance is performed according to the procedure described in 7.1.3.

9.3.3 Collector brush rigging—mechanical

Brush rigging used with collector rings have to be spaced in a radial manner such that they have approximately 2.4 to 3.2 mm (.094 in to 0.125 in) gap between brush holders and the collector rings for large machines. All connections of cables and brush pigtails must be mechanically tight and provide as low an electrical resistance as is practical. The number of carbon or graphite brushes installed in the brush rigging should be that which provides the optimum brush current density for normal load conditions. This is usually taken to be about 0.08 to 0.09 a per mm^2 (50 to 60 a per in^2) of brush. Brush tension is critical for proper brush life and can be determined by use of a spring scale attached to the brush pigtail. The brush tension should match that recommended by the equipment manufacturer.

Copyright © 2005 IEEE. All rights reserved.

Copyright The Institute of Electrical and Electronics Engineers, Inc.
Provided by IHS under license with IEEE
No reproduction or networking permitted without license from IHS Not for Resale

10. Inspection and test techniques—DC and brushless rotating machine stators

10.1 Field windings

10.1.1 Field winding visual inspection

Field pole windings of dc and brushless machines should be inspected for signs of overheated or distressed insulation. Usually, all of the pole windings are painted with the same type and color of paint. Any such winding which appears to be of darker color than the others should be cause for concern. The voltage regulator boost fields of dc machines should be given special attention. If a voltage regulator feeding boost fields is not removed from service when the generator and shunt field breakers are tripped, severe overheating of the boost fields may occur. Pole mounting hardware should be checked to see if it is properly positioned and is secure.

10.1.2 Field winding conductor resistance

Stationary fields used with rotating machinery are most commonly found on brushless exciters and dc machines. This type of equipment may have several types of field. Almost all of them have a shunt field as the main source of flux. In addition, many dc machines have commutating fields and other similar fields to prevent distortion of the shunt field flux path under various load conditions. The leads for shunt fields are easily identified and accessible for connecting test leads. Commutating fields and other flux path shaping fields may be connected to the armature winding leads. Care should be taken to assure that when measuring the resistance of any one of the field windings that other windings are not inadvertently included.

Measurement of stationary field winding resistance is performed according to the procedure described in 7.1.10.

10.1.3 Field winding insulation resistance

The field pole windings are relatively low voltage circuits. The condition of the insulation systems of these field windings can be assessed using the method outlined in 7.1.3.

10.1.4 Field winding turn insulation testing (pole drop)

Exciters have shunt field windings which are the electrical equivalent of the rotating field windings found in synchronous machines. Pole drop tests for exciters may therefore be conducted using the same techniques outlined in 8.1.6 for synchronous machines. Brushless exciter fields should be tested with the yoke assembled.

Similar techniques may be used on the other field circuits (buck, boost and commutating fields) if desired. The end connections of such fields may not be easily accessible and therefore pole drop testing is not normally conducted on them.

10.2 Field winding connections

10.2.1 Field winding connections visual inspection

Pole winding connections on dc and brushless machines are usually quite visible without machine disassembly and should be given a thorough visual inspection. These connections are usually given a coat of paint after assembly. Any discolored paint or cracked paint at pole connection points should give cause for

--`,,`,`,,`-`-`,,`,,`,`,,`---
Copyright © 2005 IEEE. All rights reserved.
Copyright The Institute of Electrical and Electronics Engineers, Inc.
Provided by IHS under license with IEEE
No reproduction or networking permitted without license from IHS
Not for Resale

concern. Suspect connections should have all paint removed from them for more detailed inspection. Bolted connections can be checked for proper torque and brazed connections checked for cracks.

10.2.2 Field winding connection resistance

Pole connections of brushless and dc machines usually pass much lower currents than those of the rotating poles on salient pole machines. Therefore, resistance testing of these connections is not normally performed and only a visual inspection is performed. Should it be desired to perform a resistance test, however, the technique described in 8.1.2 for salient pole machines may be used.

11. Inspection and test techniques—DC and brushless rotating machine rotor

11.1 Rotor armature windings

11.1.1 Rotor armature winding visual inspection

Armature windings of dc and brushless exciters are similar except that one is connected to segments of a commutator and the other to phase leads leading to the diode wheels. Other differences in the two types of windings are hard to detect without some major disassembly. A visual inspection should include inspecting for signs of over heating, loose blocking, loose banding and overheated connections to either phase leads or commutator segments. Phase leads are usually glass banded to prevent distortion due to centrifugal force. Such banding should be carefully inspected for signs of distress. Mechanical damage to this banding during exciter disassembly or assembly can lead to breakage and unwrapping of the layers of glass tape. Circumferential cracks in banding should be monitored at successive outages. Frayed ends should be clipped and secured with resin. Radial cracks across a band should be addressed immediately. Such an occurrence will usually result in major exciter failure.

11.1.2 Rotor armature winding conductor resistance

The winding resistance of a brushless exciter armature can only be measured by opening the circuits leading from each phase lead of the armature to the diodes. When these circuits are broken, the winding resistance can be measured for each circuit in the armature winding. These measurements are made from the points where the phase leads were connected to the diode modules to the star point of the armature winding.

The winding resistance of the armature of a dc exciter is usually measured by connecting the test leads to certain segments of the commutator. The most convenient way to make this measurement is to connect the test leads to segments which span the exact angular displacement as is spanned by the brush rigging.

Since the armature winding is a continuous series winding with its ends connected only to each other, an end-to-end resistance reading cannot be obtained. Only known segments of it may be measured while they are in parallel with the remainder of the winding. If the winding is measured in several identical segments and the results of these parallel combinations compared with each other, inconsistencies in resistance may be located.

The winding resistance measurements are performed according to the procedure described in 7.1.10.

11.1.3 Rotor armature winding insulation resistance

The armatures of both brushless exciters and dc exciters have leads which extend from their coils towards banks of rotating diodes or segments of a commutator. These leads leading to the diodes of a brushless exciter are uninsulated in certain areas near the diodes. These uninsulated areas provide a convenient place

Copyright © 2005 IEEE. All rights reserved.

Copyright The Institute of Electrical and Electronics Engineers, Inc.
Provided by IHS under license with IEEE
No reproduction or networking permitted without license from IHS
Not for Resale

to attach a lead for performing an insulation resistance test on the armature winding. If the star point of the armature winding is connected to a slip ring used in the field ground detection system, this slip ring also provides a convenient point to attach a test lead. Testing from either of these locations to a ground reference will test the entire armature winding insulation system. The armatures of dc exciters are connected electrically only to the commutator segments. Testing from any one of the commutator segments to a ground reference will test the insulation system of the entire armature. The insulation resistance tests of armature windings is performed according to the procedure described in 7.1.3. A megohmmeter rated 250 V dc or 500 V dc is used based on the insulation rating of the exciter armature.

11.2 Rotor diode wheel

11.2.1 Diode wheel visual inspection

Diode wheels are made in different configurations which lead to several different visual inspection techniques. There are some general observations which can be made on most of these assemblies, however.

There are many connections associated with each phase input to a diode wheel and as many of these as possible should be inspected for signs of over heating, cracks and poor contact.

The wheels themselves serve as both rotating electrical buses and to contain the centrifugal forces exerted by all diode wheel components. The combination of the wheels and their mounted components also serve as a centrifugal blower to provide cooling for the assembly. Considering the many functions of the wheels, they should be observed for mechanical damage such as rubs with stationary components and cracks, overheating and accumulation of foreign material packed around their internal diameters.

11.2.2 Diode wheel insulation resistance

11.2.2.1 Background

There are many configurations of brushless exciter diode wheels. The original equipment manufacturer and instruction literature should be consulted to determine what testing is recommended.

In many cases the wheel components of the diode wheel are insulated from the wheel. In these cases this insulation separates the 3 phase ac voltages from one another and from the dc voltage which is generated by the wheel components. Often the wheels are also insulated from the shaft and are part of the field winding. In these cases an insulation resistance measurement of the entire field winding will check wheel insulation to the shaft, but not the insulation between phases of the ac exciter.

11.2.2.2 Procedure

To test the wheel insulation between ac components and dc components, disconnect the link between the ac components and the dc components by disconnecting the fuses from the diode wheel. Ground the field winding and test the insulation resistance between the armature winding and the shaft.

11.2.3 Diode wheel fuse resistance

11.2.3.1 Discussion

Diode failure is normally a short circuit which provides a path for a phase to phase short circuit across the terminals of the ac exciter. The fuse is placed in the circuit to open this path and prevent damage to the exciter armature from the high currents associated with a short circuit.

--`,,`,`,-`-`,,`,,`,`,,`---

Copyright © 2005 IEEE. All rights reserved.

Copyright The Institute of Electrical and Electronics Engineers, Inc.
Provided by IHS under license with IEEE
No reproduction or networking permitted without license from IHS Not for Resale

Rotating fuses are often equipped with an indicating flag to signal when the fuse has opened. These flags can be viewed while the unit is spinning using a strobe light. The off-line inspection should also include a visual inspection of the condition of the indicating flags.

Internal construction of fuses often allows the fuse elements to fatigue which affects fuse performance. Cyclic duty both in start-stop cycles of the unit, and load or reactive power cycling causes thermal cycling within the fuse elements increasing fuse fatigue. If several fuses in a circuit are degraded, the potential for a cascade failure of diodes and fuses increases. A cascade failure can occur when a fuse opens, and the current cannot be carried by the remaining fuses. Degraded fuses will open at lower than intended current levels forcing more current on the remaining fuses and continuing through the circuit until all fuses are open. The final fuses to open may not have the interrupting capability to protect the associated diode; therefore, an arc will be established and the high current will destroy the diode.

Checking the fuse resistance and comparing the resultant value with established guidelines for the fuse or past data can show if fuse element fatigue has occurred. If fatigue has occurred the fuse will not perform up to its rated characteristics. There are several characteristics of a fuse which are important to its proper function in a circuit. Characteristics such as minimum melt energy, maximum let-through current, and maximum clearing time, are all important, and can be affected by fuse element fatigue.

11.2.3.2 Test intervals

The test intervals for fuse resistance should be based on the history of performance of the type of fuse and the application. Cyclic duty units should be checked on a yearly basis. All fuses should be checked at least every five years.

11.2.3.3 Procedure

Fuse resistance can be measured with the fuse in the circuit using a suitable digital low resistance ohmmeter or Kelvin bridge. Best results are achieved if the potential supplied by the instrument is applied such that the diode is reverse biased. See 7.1.10 for procedures on measuring resistance.

11.2.3.4 Interpretation of results

Limits on fuse resistance should be obtained from the original equipment manufacturer. Initial resistance values should be recorded. An increase of resistance in subsequent readings of over 20% is grounds to replace a fuse. It is worthwhile for trending and comparison to utilize the same type of instrumentation and set-up for all tests.

11.2.4 Diode wheel contact resistance

It is important that the components of the rectifier circuit are assembled correctly and make proper electrical contact. It is recommended that this assembly be verified by measuring the contact resistance between the various parts using a low resistance ohmmeter suitable for contact resistance measurements. Consult the manufacturer for recommended limits of contact resistance between various components.

Note: Many assemblies utilize aluminum heat sinks around the diodes. Do not utilize thermal conductivity compounds on these connections. These compounds often become electrically non-conducting in service and cause high resistance joints.

Copyright © 2005 IEEE. All rights reserved.

Copyright The Institute of Electrical and Electronics Engineers, Inc.
Provided by IHS under license with IEEE
No reproduction or networking permitted without license from IHS
Not for Resale

11.2.5 Diode wheel diode integrity check

11.2.5.1 Discussion

Brushless exciters utilize power diodes in a standard rectifier circuit (often a two way bridge with a three phase source). The diodes are mounted inside a wheel which rotates on the shaft such that the dc output of the bridge can be fed directly to the machine field without brushes and a collector.

There are many special tests which can be done to verify diode characteristics. These are most often performed by the equipment manufacturer when designing the equipment. The equipment manufacturer and the diode manufacturer also work together to determine tests which should be performed on each diode to verify its acceptability for operation in the application intended. Further information on these tests can be found in ANSI/EIA-282-A “Standard for Silicon Rectifier Diodes”.

Once the diode has been installed and operated, there are a limited number of simple tests which can easily be performed to determine its condition. The following gives a procedure to simply determine if a diode is operational, and a test which can show if diode reverse characteristics have degraded.

NOTE—Many diodes utilized in modern brushless excitation systems are considered “pressure contact” devices. This type of device requires a physical pressure be applied to the diode before it will conduct current. In fact some devices will rattle or be internally loose prior to proper assembly in their mounting. Contact the original equipment manufacturer for guidelines on the pressure required by the diode.

11.2.5.2 Test intervals

Diodes should definitely be checked if their associated fuse has blown. If the visual condition of the diode indicates thermal stress, or if it is known that the diode was exposed to higher than rated temperature conditions, then the diode should be checked at the next available opportunity. Consult the original equipment manufacturer for other guidelines.

11.2.5.3 Safety

One of the procedures used to check diodes calls for application of high voltage in reverse across the diode. For this test, a suitable series resistor should be included in the circuit such that if the diode should breakdown in the reverse direction the current in the circuit will be limited to a level below the rating of all the components in the circuit.

11.2.5.4 Precautions

Due to the extreme centrifugal forces placed on rotating diodes, there are special considerations with the internal construction and mounting. Prior to removing the diodes from the assembly, the operator should consult with the manufacturer for special considerations or precautions which should be taken. Balance of the rotor is also very important; therefore, it is prudent when disassembling diodes and diode wheel components to mark the location where they were installed so they can be returned to the same location. If new components are installed, the weights should be matched within manufacturer's guidelines.

11.2.5.5 Procedure

Operational check: An ohmmeter may be used to determine if a diode is shorted in the reverse direction. Disconnect one terminal from the circuit and measure the diode resistance in the reverse direction. The highest range of the ohmmeter should be used to assure that the applied voltage is as high as possible. With some power diodes, the voltage supplied by a common ohmmeter is not sufficient to operate the diode in the forward direction. (Ohmmeters with mechanical meter movements often utilize higher voltages for resistance measurement; therefore, these are often preferred for diode operational checks.) In cases where the ohmmeter does not operate the diode, the ohmmeter check will not give a conclusive evaluation that a

Copyright © 2005 IEEE. All rights reserved.
Copyright The Institute of Electrical and Electronics Engineers, Inc.
Provided by IHS under license with IEEE
No reproduction or networking permitted without license from IHS Not for Resale

diode is operational; however a shorted diode can often be detected using this method. In cases where the result is at all questionable, the following check for diode reverse characteristic degradation should be performed.

Check for degradation: Install the diode in a circuit with a suitable resistor (to limit circuit current in event of a diode short), a dc milliammeter, and a variable dc supply which is free from voltage transients. The diode should be installed to block the voltage from the dc source. For diodes which require pressure to operate, the diode must be installed in a suitable fixture. Consult diode rating information for the appropriate maximum value of reverse voltage for room temperature operation. Gradually apply the dc voltage and read the dc milliammeter once the diode is at the rated reverse voltage condition. Diode test devices are commercially available to test certain diode sizes. Check with the instrument manufacturer to determine if the instrument is capable of testing the subject diode.

11.2.5.6 Interpretation of results

If a diode exhibits a low resistance in both directions from the ohmmeter check, it should be replaced. Forward resistance readings are usually a few ohms. If the forward resistance appears high, it may be that the ohmmeter does not have sufficient driving voltage to properly operate the diode. High forward resistance may also be due to insufficient pressure applied to a pressure contact type diode. Reverse readings are usually above 10 kilohms.

Results of the degradation test will depend upon the circuit being tested. Results from several similar diodes can be compared, and if the test is repeated in the future, the results from a test made with the same circuit and instrumentation can be trended to determine if degradation has occurred.

11.2.6 Diode wheel capacitor test

11.2.6.1 Discussion

Some rectifier circuits utilize capacitors across the terminals of the diode to reduce the reverse voltage impressed on the diode during diode commutation. Diode commutation is the process of the diode junction charging in the reverse direction and shutting off current flow. During the commutation process, diode current changes rapidly causing a high voltage.

Over time, capacitors typically will decrease in capacitance. As this process occurs, the voltage which is impressed across the diode increases which can degrade the diode and lead to a short circuit of the diode.

11.2.6.2 Test Intervals

Consult the manufacturer for further guidelines on intervals for capacitor testing.

11.2.6.3 Safety

Capacitors can remain charged after equipment is shutdown. Capacitors should always be discharged prior to and following testing.

11.2.6.4 Precautions

In a brushless exciter, the capacitors are mounted inside a wheel on the shaft which spins at the machine rated speed. The capacitors are exposed to extremely high centripetal forces during operation. For this reason capacitors which are used in this application have special considerations in design and application. For instance to maintain machine balance, capacitors should be carefully marked if they are disassembled from the machine, and reassembled in the same location. If a new capacitor is to be installed, then capacitor

--`,,`,`,-`-`,,`,,`,`,,`---
Copyright © 2005 IEEE. All rights reserved.

Copyright The Institute of Electrical and Electronics Engineers, Inc.
Provided by IHS under license with IEEE
No reproduction or networking permitted without license from IHS
Not for Resale

weights should be matched within manufacturer's guidelines. Consult the original equipment manufacturer for further guidelines on assembly and disassembly of capacitors in rotating equipment.

11.2.6.5 Procedure

Insulation resistance of capacitors should be verified using “insulation resistance test” procedure found in 7.1.3. The value of voltage to be used in measuring insulation resistance should not be greater than the rating of the capacitor.

Capacitance should be measured after discharging the capacitor and isolating it from the circuit by opening one leg of the circuit. The capacitor should be discharged for a suitable time to assure no remaining charge. Capacitance should be measured with a suitable capacitance meter.

In addition, the charging and discharging characteristics of a capacitor can be verified using a common low voltage ohmmeter. Measuring across the capacitor leads at the highest ohm scale of the meter, the initial reading should be close to zero. The reading should then rise to an infinite resistance. By reversing the leads the reading should quickly zero and build once again to infinite resistance. The instruction manual for some meters will give data that can be used to calculate capacitance based on the time required to build the charge.

11.2.6.6 Interpretation of results

Contact the manufacturer for guidelines on the acceptability of measured capacitance. If the capacitance is lower than rated, the diodes will be under more stress due to larger reverse voltage spikes than originally intended. If the capacitance is larger than rated, there may be something wrong internally with the capacitor signaling that it may soon rupture.

If a capacitor fails to charge completely, there may be a high-resistance internal short, and the capacitor should be replaced.

11.3 Rotor commutator

11.3.1 Commutator visual inspection

Commutators should be inspected for grooves, uneven surface, high mica, non uniform surface film, roughness and signs of high temperature operation. Any or a combination of these problems has associated with it a cause and these causes should be corrected. If not corrected, these problems can lead to serious failure modes of the commutator and brush rigging assembly.

11.3.2 Commutator run-out measurement

In order to allow for proper brush performance there is a maximum acceptable total indicated run-out (TIR) for commutator surfaces. The allowable limits are dependent on peripheral speeds of the commutator. The ideal TIR, which approaches the practical limit for machining, is not over 0.025 mm (.001 inch) for peripheral speeds of 1525 m/min (5000 feet/min) or faster; and 0.075 mm (.003 inch) for speeds of less than 1525 m/min (5000 feet/min).

Commutators which have been in service for a period of time may operate well up to a level of 0.1 mm (.004 inch) TIR for the higher speed shafts and a somewhat higher TIR for the lower speed shafts. The absolute maximum acceptable TIR for a given machine can be determined by observing brush and commutator performance.

Commutator run-out can be measured using dial indicators while the shaft is at a slow roll either in its bearings or between lathe centers.

Copyright © 2005 IEEE. All rights reserved.
Copyright The Institute of Electrical and Electronics Engineers, Inc.
Provided by IHS under license with IEEE
No reproduction or networking permitted without license from IHS Not for Resale

12. Inspection and test techniques—DC and brushless rotating machines assembly

12.1 Assembly-brush rigging

12.1.1 Assembly-brush rigging visual inspection

Brush rigging for a commutator should be inspected for contamination with excessive amounts of carbon brush dust. Excessive accumulation of brush dust can cause a flash over between polarities and will lead to major damage of the brush rigging. The commutator may become involved in the damage also. It is critical that brush rigging be properly positioned and secured mechanically. All brush rigging components should be inspected for signs of shifting and for properly secured mounting hardware. Brush boxes should be observed for proper attachment and clearance with the brushes being used. Brushes should be checked for signs of improper operation. Poor brush performance may indicate improper spring pressure, high resistance brush pigtail connection, incorrect current density or problems associated with other aspects of the brush rigging covered in this document.

12.1.2 Assembly-brush rigging physical spacing

Brush rigging used with the commutators of dc machines have several mechanical position requirements that are critical to proper operation. The brush holder bars have to be precisely spaced at equal angular intervals around the commutator. The brush bars must have a precise angular relationship to the stationary field poles. They should be parallel with the commutator segments. The brush holders should have the proper radial gap relative to the commutator surface.

The first check that should be made is to assure that the brush arms are parallel with the commutator segments. This can be done by observing where the brushes of a given brush arm contact the commutator. Either new brushes should be used for this or with the brushes removed slide a flat plate down the inside walls of the empty brush holders and see where the edge of the plate contacts the commutator segment. The plate has to be held firmly against the inside wall of the brush holder. A wood chisel works well for this if care is taken to avoid damage to the commutator surface. The necessary adjustments should be made to the brush arm or brush holders to correct any out of parallel condition before proceeding with other mechanical measurements or electrical tests of the dc machine.

The next mechanical measurement is that of checking the radial clearance between the brush holder and the commutator surface. The required clearance depends on the size of the machine so the manufacturer's recommendation on this value should be used. This clearance usually ranges between 2.4 mm (.094 inch) and 3.2 mm (0.125 inch). The measurement is best accomplished by sliding between the brush holder and commutator a hardwood spacer of a thickness equal to the desired radial clearance. Brush holder clearance can be then quickly verified or corrected.

Equal circumferential spacing of brush bars is verified by use of length of common adding machine tape. The tape is pulled tightly around the circumference of the commutator with the ends overlapped and taped in place. Match marks are made on the overlapping sections of tape. As with checking the brush arms for parallel, a wood chisel is slid down the inside wall of a brush box on each brush arm. The flat side of the chisel should be kept flat against the inner walls of the brush boxes. The point where the sharp edge of the chisel contacts the adding machine tape is then precisely marked.

After a mark for a brush box on each arm is made, the tape is removed and spread out on a table. The distance between the chisel marks can be measured and the corresponding brush arm spacing can be determined.

Copyright © 2005 IEEE. All rights reserved.

Copyright The Institute of Electrical and Electronics Engineers, Inc.
Provided by IHS under license with IEEE
No reproduction or networking permitted without license from IHS
Not for Resale

There are two methods to determine if the circumferential positioning of the brush arms is correct relative to the neutral positions between the field poles. One method is associated with the mechanical neutral and the other with the electrical neutral. These two neutral locations are closely related and can actually be the same point. Mechanical neutral will be discussed here and locating the electrical neutral will be discussed in 12.1.4.

In order to determine mechanical neutral, some factory reference marks should be located on the frame of the machine facing the brush rigging. These marks are usually center punch marks within a circle or punch marks associated with some other marking. Using a tram (divider), equidistant arcs are made from the two factory reference marks on the frame which intersect at the end of a commutator segment. This intersection marks the correct location for the center of a brush contact point. The entire brush rigging can be loosened from its clamping assembly and rotated until the center line of brushes from one brush arm coincide with the intersecting arcs on the commutator. Should this adjustment be required and performed, all previous measurements described in this subclause should be rechecked.

12.1.3 Assembly-brush rigging insulation resistance

Insulation resistance of the brush rigging for a commutator can be measured in the same basic way as for measuring collector ring brush rigging. Refer to 9.2.1 for that technique.

12.1.4 Assembly-brush rigging kick-neutral

The key to good commutation is timing. A given brush has to bridge two segments of a commutator in the process of passing from one segment to the next. Since each segment is connected to a loop of rotating armature coils, there is the possibility that the two segments being bridged by a single brush are of a different potential. This would effectively allow the brush to short circuit this loop of energized coils causing sparking. It is known that any given loop of coils passing in front of a field pole cuts through maximum flux and thereby has maximum voltage induced in it. As the loop of coils continues to rotate past the center of the field pole less and less voltage is induced in it. When the loop of coils reaches the point being exactly one half of the way between poles there is zero voltage induced in it and this is known as the electrical neutral position. It is at this point that a brush can be located which will bridge the segments connected to this loop of coils without producing sparking condition. For this reason an arm of brushes will be found for every field pole on a dc machine and they will be located such that they only contact segments connected to coils passing through the neutral positions. Field poles are evenly spaced around the frame of the machine and therefore the brush bars should be evenly spaced. Brush rigging is designed to be rotated with reference to frame of the machine to the angular position which allows clamping all of its brushes such that they only contact segments associated with the neutral points. In 12.1.2 the method for locating the mechanical neutral position is discussed. It should be noted that distortion of the field flux path with the armature occurs as the dc machine is electrically loaded. As a result, the neutral position may shift with increases in armature currents. This tendency for the neutral to shift with increases in armature current is usually compensated for by various additional field windings which are connected in series with the armature circuit. The interaction of these various fields frequently results in the best point of brush commutation being shifted slightly from the measured neutral position.

In order to find the electrical neutral position for brush arms a simple excitation type of test can be performed. This test is commonly known as a “kick-neutral” test and varies somewhat depending on the number of commutator segments per pole. The detailed procedure for this test is beyond the scope of this document but a general description of it follows.

The number of commutator segments is divided by the number of field poles and this gives the “throw” or segments per pole. It is across a complete throw of segments that voltage measurements will be made. The voltage will be measured using a dc analog voltmeter on about the 15 volt scale. Across the input leads to the main exciter shunt field a 6 V lantern battery is connected in a series with a test switch and a current limiting variable resistor.

Copyright © 2005 IEEE. All rights reserved.
Copyright The Institute of Electrical and Electronics Engineers, Inc.
Provided by IHS under license with IEEE
No reproduction or networking permitted without license from IHS
Not for Resale

Starting with most of the current limiting resistor in the circuit, the battery-exciter field circuit test switch is closed. With a small amount of current passing through the exciter field windings the voltmeter is placed across any span of commutator segments making up a complete throw. The test switch is then opened. There should be a deflection of the voltmeter movement. If not, more resistance needs to be cut out of the field circuit. It could be that the entire 6 V are required to develop the necessary field strength. Once a meter deflection is observed when the test switch is opened the process of locating the electrical neutral can start. Keeping constant the number of segments making up a throw between the voltmeter leads, the leads of the voltmeter are moved around the commutator with the switch being closed then opened while measuring across each successive pair of segments. As the pair of test leads approach the neutral points, the deflection when the switch is opened will be diminished. As the leads are connected to the neutral points no deflection will be observed.

Should the test be continued and the test leads moved progressively further around the commutator, the meter deflection will be in the opposite direction as that observed when approaching the neutral from the other side of it. The centerline of the brush bars should be located on the segment which measures a neutral response.

12.2 Assembly-bearing

12.2.1 Assembly-bearing visual inspection

When machines are disassembled to the point where bearings are removed, an inspection of them should be made. They should be inspected for signs of excessive wear, gouged babbitt, foreign material in the babbitt, etching of the babbitt due to the passing of electrical current and for loss of bond with the bearing shell. An ultrasonic test can be performed to determine the condition of bonding between babbitt and shell as described in 8.2.5.

Inspection of the bearing shell should be performed to insure that it has been held securely in its mount.

12.2.2 Assembly-bearing insulation resistance

Most dc and brushless exciters have insulated bearings to prevent the flow of electrical current through them. The potential for current flow is the same as that discussed in 9.2.2 on machine bearings. The main difference between generators and exciters is that in the case of exciters, the entire bearing pedestal may be insulated instead of insulating just the bearing. In such case, all piping and instrumentation connections to the pedestal are insulated and their insulation systems will be tested along with the bearing pedestal insulation. In any case, whether just a bearing insulation or an entire pedestal insulation is to be tested, the technique that should be used is that described in 9.2.2.

13. Inspection and test techniques—permanent magnet generators

Permanent magnet generators are frequently used as the power source for supplying exciter field current and as a back-up power supply for turbine governors. The permanent magnet generator is typically driven directly by the exciter shaft.

13.1 Permanent magnet generator stators

The stator of a permanent magnet generator consists of the windings and core. The windings for exciter field supply are usually three phase.

Copyright © 2005 IEEE. All rights reserved.

Copyright The Institute of Electrical and Electronics Engineers, Inc.
Provided by IHS under license with IEEE
No reproduction or networking permitted without license from IHS
Not for Resale

13.1.1 PMG stator visual inspection

The armature winding should be inspected for signs of overheating, contamination with foreign material and distressed insulation. Connections to external leads should be examined for signs of looseness, distress and over-temperature operation.

13.1.2 PMG stator conductor resistance

The multi-phase armature winding is usually connected in a star configuration with the star point not accessible. The use of a Kelvin bridge or low resistance ohmmeter can be used to make phase to phase measurements which can be compared with each other. The process of making such conductor resistance measurements is described in 7.1.10.

A difference of more than 2% between the various phase to phase resistances should give cause for further examination.

13.1.3 PMG stator winding insulation resistance

A winding insulation resistance test should be performed by a relatively low voltage insulation test set as described in 7.1.3. The selected test voltage should be no greater than the peak voltage to ground to which the insulation is subjected while in service. Acceptable resistance values for various types of equipment are outlined in 7.1.3.4.

13.2 Permanent magnet generator rotor

The rotor of a permanent magnet generator is made up of an arrangement of permanent magnets firmly attached to a rotating drum or shaft. The mounting hardware for the magnets should be inspected for broken, loose or missing components.

Caution should be exercised when in close proximity of strong permanent magnets. When handling them they can be physically hard to control near magnetic material and can easily injure the handler or damage the magnet itself if not properly constrained. These magnets may also cause problems with electronic medical implants if a person wearing such an implant gets close to one.

The magnets should be inspected for chips, cracks or signs of being out of position. The size and orientation of chips and cracks can be significant relative to the safety of continued operation. Should distress be observed, the manufacturer of the equipment should be consulted.

--`,,`,`,-`-`,,`,,`,`,,`---

Copyright © 2005 IEEE. All rights reserved.

Copyright The Institute of Electrical and Electronics Engineers, Inc.
Provided by IHS under license with IEEE
No reproduction or networking permitted without license from IHS Not for Resale