IEEE Guide for Protection, Interlocking, and Control of Fossil-Fueled Unit-Connected Steam Stations

Sponsor
Power Generation Committee
of the
IEEE Power Engineering Society

Approved 22 September 1983
IEEE Standards Board

© Copyright 1985 by

The Institute of Electrical and Electronics Engineers, Inc 345 East 47th Street, New York NY 10017, USA

No part of this publication may be reproduced in any form, in an electronic retrieval system or otherwise, without the prior written permission of the publisher.

Copyright The Institute of Electrical and Electronics Engineers, Inc.
Provided by IHS under license with IEEE
No reproduction or networking permitted without license from IHS
Not for Resale

IEEE Standards documents are developed within the Technical Committees of the IEEE Societies and the Standards Coordinating Committees of the IEEE Standards Board. Members of the committees serve voluntarily and without compensation. They are not necessarily members of the Institute. The standards developed within IEEE represent a consensus of the broad expertise on the subject within the Institute as well as those activities outside of IEEE which have expressed an interest in participating in the development of the standard.

Use of an IEEE Standard is wholly voluntary. The existence of an IEEE Standard does not imply that there are no other ways to produce, test, measure, purchase, market, or provide other goods and services related to the scope of the IEEE Standard. Furthermore, the viewpoint expressed at the time a standard is approved and issued is subject to change brought about through developments in the state of the art and comments received from users of the standard. Every IEEE Standard is subjected to review at least once every five years for revision or reaffirmation. When a document is more than five years old, and has not been reaffirmed, it is reasonable to conclude that its contents, although still of some value, do not wholly reflect the present state of the art. Users are cautioned to check to determine that they have the latest edition of any IEEE Standard.

Comments for revision of IEEE Standards are welcome from any interested party, regardless of membership affiliation with IEEE. Suggestions for changes in documents should be in the form of a proposed change of text, together with appropriate supporting comments.

Interpretations: Occasionally questions may arise regarding the meaning of portions of standards as they relate to specific applications. When the need for interpretations is brought to the attention of IEEE, the Institute will initiate action to prepare appropriate responses. Since IEEE Standards represent a consensus of all concerned interests, it is important to ensure that any interpretation has also received the concurrence of a balance of interests. For this reason IEEE and the members of its technical committees are not able to provide an instant response to interpretation requests except in those cases where the matter has previously received formal consideration.

Comments on standards and requests for interpretations should be addressed to:

Secretary, IEEE Standards Board
345 East 47th Street
New York, NY 10017
USA

--`,,`-`-`,,`,,`,`,,`---

Copyright The Institute of Electrical and Electronics Engineers, Inc.
Provided by IHS under license with IEEE
No reproduction or networking permitted without license from IHS

Not for Resale

Foreword

(This Foreword is not a part of IEEE Std 502-1985, IEEE Guide for Protection, Interlocking, and Control of Fossil-Fueled Unit-Connected Steam Stations.)

The introduction to protection, interlocking, and control for a fossil-fueled plant is written to furnish information which will help fill a need that exists within the industry to promote the use of sound engineering practices to provide a coordinated design for the protection, interlocking, and control of unit-connected boiler-turbine generators power plants. It covers what is good practice at the time of publication, but it is not intended to be a handbook of design practices. It is impractical to cover in detail all of the varied aspects of protection, interlocking, and control since there are a great number of different types of plants and equipment.

It should be remembered that the information presented here is typical of that available to provide protection to personnel and safeguard equipment against catastrophic damage which may result from equipment failure, inadvertent errors, or misoperations. The system diagrams and logic diagrams are only representative and do not depict all of the system design features or protective features required for any specific application. The diagrams are intended to suggest the design areas to be covered by the specific unit design and cannot replace a competently prepared design which meets the unique requirements of the specific generating unit. The material presented shall not be used by inexperienced personnel as a substitute for engineering competence.

The IEEE Standards Manual describes a guide as follows: *documents in which alternative approaches to good practice are suggested, but no clear recommendations are made*.

The information in this guide was first developed by the working group and paper presented as a five-part series and published in *IEEE Transactions on Power Apparatus and Systems*, vol PAS-92, no 1, pp 314–401.

The furnace air and fuel comments are in accordance with the National Fire Protection Association recommendations on gas, oil, and coal boiler operation. This publication is intended to be in accordance with NFPA recommendations, NFPA 85 Series.

Members of the working group responsible for this guide are as follows:

K. L. West, *Chair*

R. S. Bilski
R. E. Drake
L. E. Ettlinger
M. E. Jackowski
R. G. Livingston
G. L. Luri
P. L. McGaha
B. J. Stables
R. E. Strasser
A. J. Zadiraka

Copyright The Institute of Electrical and Electronics Engineers, Inc.
Provided by IHS under license with IEEE
No reproduction or networking permitted without license from IHS
Not for Resale

At the time this guide was approved, the members of the Power Plant Control, Protection and Automation Subcommittee were:

T. D. Younkins, *Chair*

A. T. Baker
R. S. Bilski
G. C. Boyle
R. L. Castleberry
E. F. Chelotti
C. H. Clarridge
D. Damsker
R. S. Darke
P. M. Davidson
A. C. Dolbec
V. F. Estcourt
M. Ewer
A. H. Ferber
R. J. Fleming
D. C. Garvey
A. Gross
M. E. Jackowski
H. M. Jimenez
C. Kneeburg
G. Luri
R. E. Mattson
T. J. McGrath
W. S. Morgan
E. B. Nobile
M. I. Olken
W. S. Pearce
N. Petroro
R. J. Reiman
T. Russell
W. J. Spengel
A. J. Spurgin
R. B. Squires
V. D. Thomas
D. Tondi
W. H. von Kleinsmid
K. L. West
J. P. Whooley

At the time this guide was approved, the members of Power Generation Committee of the IEEE Power Engineering Society were:

R. Zweigler, *Chair*
D. Diamant, *Vice Chair*
R. W. Cantrell, *Secretary*

J. C. Appiarius
W. W. Avril
M. S. Baldwin
J. H. Bellack
I. B. Berezowsky
G. Berman
F. L. Brennan
G. C. Boyle
P. G. Brown
E. F. Chelotti
H. E. Church, Jr
C. H. Clarridge
R. S. Colemen
R. E. Cotta
M. L. Crenshaw
R. S. Darke
P. Davidson
A. C. Dolbec
G. R. Engman
W. H. Esselman
V. F. Estcourt
T. F. Faulkner
W. M. Fenner
A. H. Ferber
D. I. Gorden
R. D. Handel
J. J. Heagerty
M. E. Jackowski
E. F. Kaprielian
F. Keay
P. R. Landrieu
S. Law
P. Lewis
H. E. Lokay
G. L. Luri
J. T. Madill
J. D. Mather
O. S. Mazzoni
A. J. McElroy
T. M. McMahon
J. L. Mills
W. S. Morgan
P. A. Nevins
S. Nikolakakos
J. T. Nikolas
R. E. Penn
J. D. Plaxco
R. J. Reiman
D. E. Roberts
W. J. Rom
R. G. Scott
J. J. Seibert
M. N. Sprouse
A. J. Spurgin
R. B. Squires
J. V. Stephens
G. I. Stillman
J. E. Stoner, Jr
V. C. Sulzberger
S. Tjepkema
R. H. Waltman
E. J. Warchol
M. Warren
K. L. West
J. P. Whooley
R. F. Willett
C. J. Wylie
T. D. Younkins

Copyright The Institute of Electrical and Electronics Engineers, Inc.
Provided by IHS under license with IEEE
No reproduction or networking permitted without license from IHS
Not for Resale

When the IEEE Standards Board approved this standard on September 22, 1983, it had the following membership:

James H. Beall, *Chair*
Edward Chelotti, *Vice Chair*
Sava I. Sherr, *Secretary*

J. J. Archambault
John T. Boettger
J. V. Bonucchi
Rene Castenschiold
Edward J. Cohen
Len S. Corey
Donald C. Fleckenstein
Jay Forster
Donald N. Heirman
Irvin N. Howell, Jr.
Joseph L. Koepfinger*
Irving Kolodny
George Konomos
R. F. Lawrence
John E. May
Donald T. Michael*
John P. Riganati
Frank L. Rose
Robert W. Seelbach
Jay A. Stewart
Clifford O. Swanson
Robert E. Weiler
W. B. Wilkens
Charles J. Wylie
*Member emeritus

--`,,`,,`-`-`,,`,,`,`,,`---

Copyright The Institute of Electrical and Electronics Engineers, Inc.
Provided by IHS under license with IEEE
No reproduction or networking permitted without license from IHS
Not for Resale

CLAUSE PAGE

1. Scope and References 1

1.1 Scope 1
1.2 References 1

2. Introduction 2

3. Plant Auxiliaries in Service 4

4. Circulating Water Cycle 5

5. Service Water Cycle 7

6. Condensate and Feedwater System 8

7. Boiler Water 11

7.1 Drum Boiler 12
7.2 Once-Through Boiler 14

8. Furnace Air and Fuel System 19

8.1 19
8.2 20
8.3 22
8.4 22

9. Turbine-Generator 23

9.1 Turning Gear Operation 24
9.2 Steam Seal System 25
9.3 Vacuum Operation 26
9.4 Oil and Hydraulic Fluid Systems 27
9.5 Turbine Rotor Prewarming 28
9.6 Valve Trip Testing 28
9.7 Turbine Preroll 29
9.8 Turbine Roll 29

10. Overall Protection 33

10.1 Boiler Protection 34
10.2 Turbine Protection 36
10.3 Generator Protection 38
10.4 Main and Auxiliary Transformers 39
10.5 Auxiliary System 40
10.6 Emergency Power 40

11. Summary of Unit Overall Protection 41

Copyright The Institute of Electrical and Electronics Engineers, Inc.
Provided by IHS under license with IEEE
No reproduction or networking permitted without license from IHS
Not for Resale

IEEE Guide for Protection, Interlocking, and Control of Fossil-Fueled Unit-Connected Steam Stations

1. Scope and References

1.1 Scope

This guide presents information regarding the essential subsystems that make up a fossil-fueled unit-connected boiler-turbine-generator (BTG) station and describes typical interlocking, control, and protection for operating them in a coordinated order to ensure proper start-up and safe shutdown. The primary purpose of this guide is to provide a basis for

1) Qualitative evaluating of overall design of a unit-connected fossil fuel plant
2) Writing general operating guides of an educational nature, thereby serving to aid in acquainting personnel with boiler-turbine-generator systems.

Every new fossil plant will have its own special operating sequence due to the type of equipment installed and its operating company's practices. However, this guide purports to include in one document a description of various cycles in a power plant, their sequence of operation, and protection procedures.

The information contained in this guide should be coordinated with manufacturers' recommendations to establish individual plant designs.

1.2 References

[1] ANSI/NFPA 85A-1982, Furnace Explosions in Fuel Oil- and Natural Gas-Fired Single-Burner Boiler-Furnaces.[1]

[2] ANSI/NFPA 85B-1978, Gas-Fired Multiple Burner Boiler-Furnaces, Explosion Prevention.

[3] ANSI/NFPA 85D-1978, Fuel Oil-Fired Multiple Burner Boiler-Furnaces, Explosion Prevention.

[4] ANSI/NFPA 85E-1980, Pulverized Coal-Fired Multiple Burner Boiler-Furnaces, Explosion Prevention.

[1]NFPA documents are published by the National Fire Protection Association, Publications Sales Division, Batterymarch Park, Quincy, MA 02269. Copies are also available from the Sales Department of American National Standards Institute, 1430 Broadway, New York, NY 10018.

Copyright © 1985 IEEE All Rights Reserved

--`,,`-`-`,,`,,`,`,,`---

Copyright The Institute of Electrical and Electronics Engineers, Inc.
Provided by IHS under license with IEEE
No reproduction or networking permitted without license from IHS
Not for Resale

[5] ANSI/NFPA 85G-1982, Prevention of Furnace Implosions in Multiple Burner Boiler-Furnaces.

[6] ASME Boiler and Pressure Vessel Code.[2]

[7] NFPA 85F-1982, Pulverized Fuel Systems, Installation and Operation.

2. Introduction

The text material, simplified flow diagrams, and logic diagrams are presented in the proper sequence for start-up of a fossil-fueled boiler-turbine-generator unit. Section 10. describes overall protection of the systems, and Section 11. is a table which summarizes and supplements the guide material.

Figure 1 shows a simplified combined systems diagram in logic form.

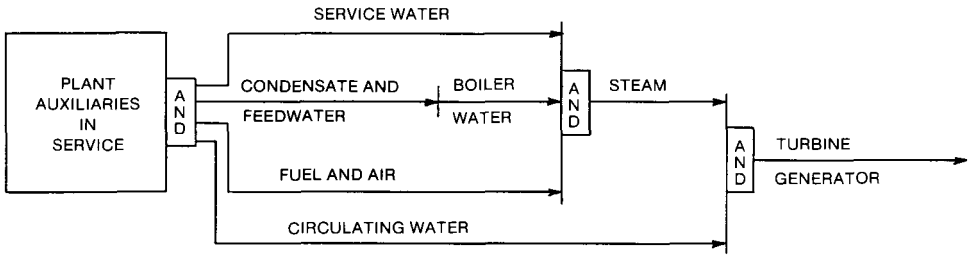

Figure 1—Combined Systems Diagrams

[2]ASME documents are available from the American Society of Mechanical Engineers, 345 East 47th Street, New York, NY 10017.

Copyright © 1985 IEEE All Rights Reserved

Copyright The Institute of Electrical and Electronics Engineers, Inc.
Provided by IHS under license with IEEE
No reproduction or networking permitted without license from IHS
Not for Resale

Figure 2 shows a simplified arrangement of the major elements of a boiler-turbine-generator unit.

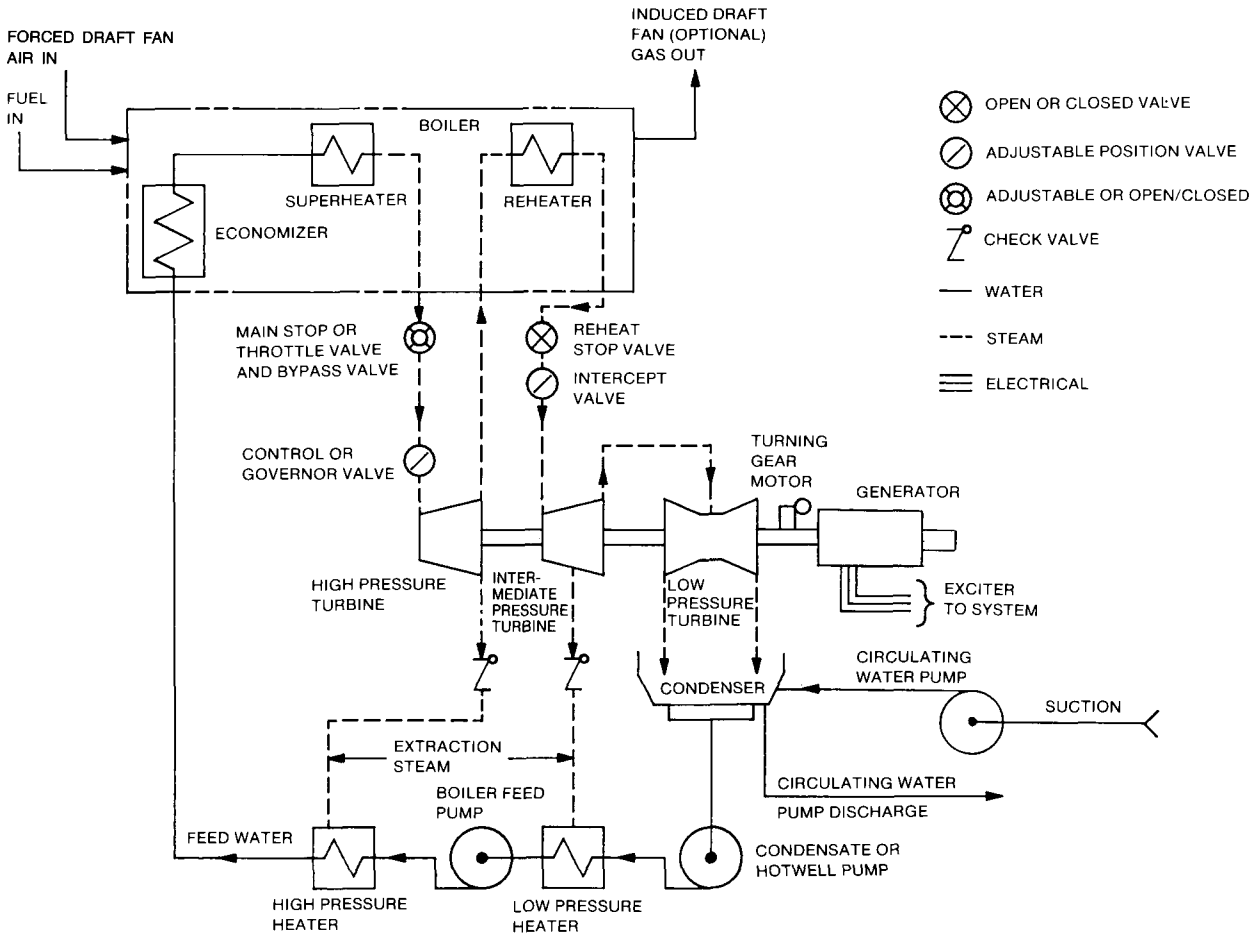

Figure 2—Simplified Arrangement: Boiler-Turbine-Generator

Copyright © 1985 IEEE All Rights Reserved

Copyright The Institute of Electrical and Electronics Engineers, Inc.
Provided by IHS under license with IEEE
No reproduction or networking permitted without license from IHS
Not for Resale

The logic symbols used are as follows:

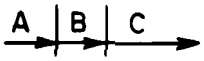

Operation A, B, and C shall be satisfied in that sequence or order.

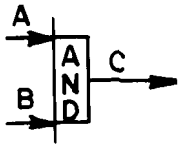

Both Operations A and B shall be satisfied before C can begin.

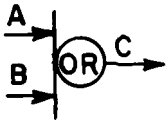

Either Operation A or B shall be satisfied before C can begin.

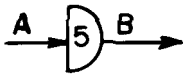

Operation of A shall be maintained for a definite time (5 min in the symbol) before B can begin.

The NOTES following the flow diagrams and the logic diagrams supplement the diagrams and differentiate between them. Corresponding reference numbers appear on the diagrams only where required for clarity.

3. Plant Auxiliaries in Service

Plant auxiliaries in service refers to the many plant subloops which shall be started and run prior to starting the main systems. These include electrical control (direct and alternating current), auxiliary power, control and station air, plant lighting, and communication systems. These will vary with the unit and are not detailed.

Major rotating equipment shall be started as shown in the various cycle logic diagrams. Such equipment includes fans and boiler feed, condensate, and circulating water pumps. A logic diagram, Fig 3, covers the steps for putting this type of equipment into service. A similar diagram would apply, with minor variations, to each piece of rotating equipment of the plant.

1) Prestart checks
   - Breaker control circuit*
   - Motor temperature*
   - Bearing temperature*
   - Power is available
   - Auto trip acknowledged
   - Hold-off tags removed
   - Review motor starting requirements
2) Lubrication checks
   - Oil level*
   - Oil temperature above minimum
   - Oil temperature below maximum
   - Oil cooling water on
   - Oil pump pressure* (if used)

Copyright © 1985 IEEE All Rights Reserved

Copyright The Institute of Electrical and Electronics Engineers, Inc.
Provided by IHS under license with IEEE
No reproduction or networking permitted without license from IHS Not for Resale

3) Driven equipment checks
   Checks required before starting motor
4) Process control checks
   Damper positions
   Valve positions
   Permissive interlocks
5) Coupling checks
   a) Magnetic
      Control at zero speed
      Power available
   b) Hydraulic
      Oil level*
      Scoop at zero speed
      Cooling water*
      Freeze protection*
      Oil pump pressure* (if used)
6) Poststart checks
   Running checks
   Vibration
   Oil temperature
   Oil pressure
   Bearing temperature (cooling water*)
   Motor current (if monitored)
   Seal water*

*Visual, gauge, or meter checks

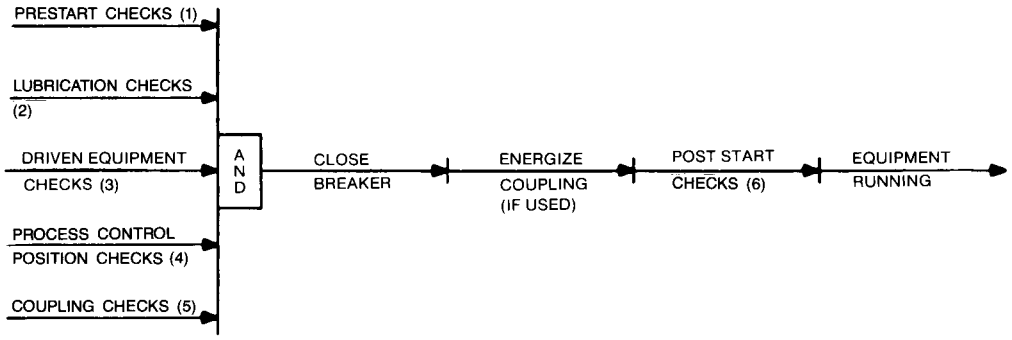

Figure 3—Large Motor Drive

4. Circulating Water Cycle

The circulating water system provides cooling and heat removal from the condenser and is normally the first cycle to be started. This is especially true if the circulating water pump provides a source of water for the cooling or service water cycle. The source of cooling water may be a lake, river, or other body of water. If environmentally acceptable, the discharge is generally not recycled; otherwise, a cooling tower or pond is added to the cycle with either an open or closed loop. Figure 4 is the circulating water flow diagram with variations shown.

Copyright © 1985 IEEE All Rights Reserved

Copyright The Institute of Electrical and Electronics Engineers, Inc.
Provided by IHS under license with IEEE
No reproduction or networking permitted without license from IHS
Not for Resale

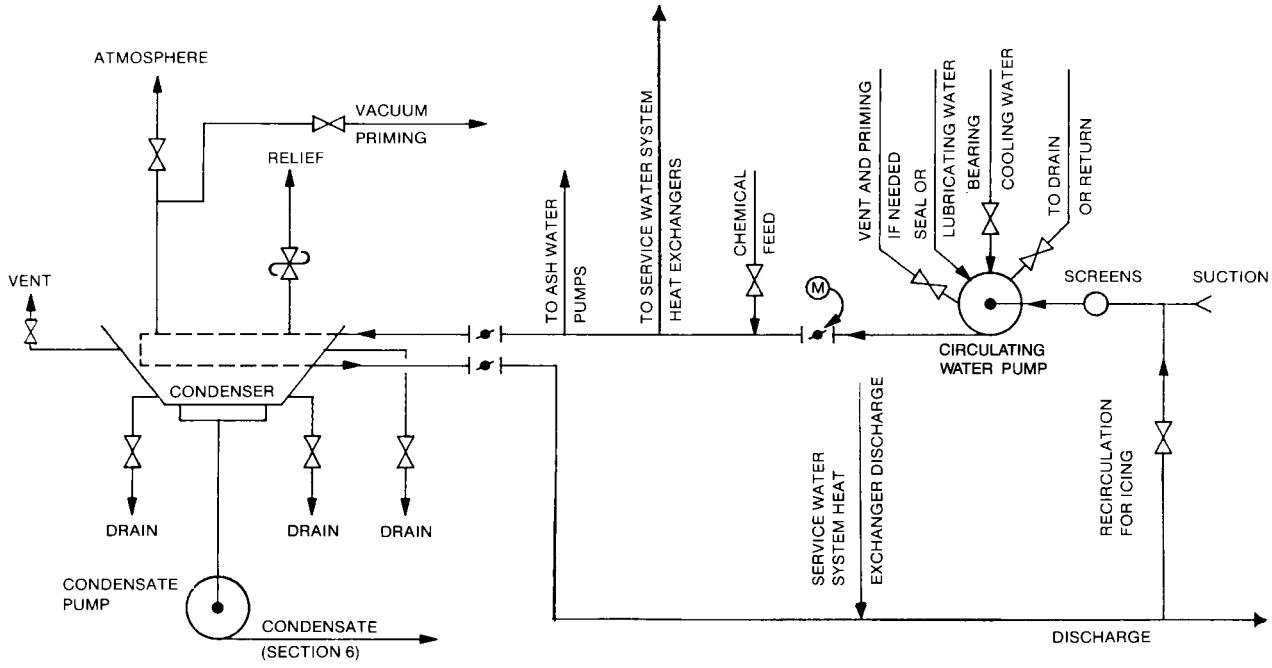

Figure 4—Circulating Water Flow Diagram

Figure 5 shows the logic sequence for putting the circulating water system into service and should be used in conjunction with Fig 4.

1) The seal water supply should be of sufficient pressure, volume, and cleanliness before a circulating water pump is started.
2) A horizontal pump or vertical dry-pit pump shall be primed before starting to prevent cavitation and overheating, and to establish a suction head. Vertical pumps are usually below the water level, and thus their pump casings are filled.
3) On systems where the condenser is above the circulating water supply reservoir, it is often necessary to fill the system using a fill pump (often the service water pump) before starting the circulating water to prevent water hammer.
4) When cooling towers are used, they may be open or closed, and natural- or forced-ventilation types. In areas where freezing can be a problem, proper precautions for protection shall be taken.
5) Refer to Fig 3 for prestart and poststart checks. Since circulating water pumps are single speed, a variable speed coupling is not used. With two pumps, each discharge valve should be opened after the pump starts and closed automatically when the pump stops to prevent reverse rotation when the other pump is running. Some pumps are built with antirotation devices or can run backwards for only a preset time.

   Some circulating pumps shall be started with discharge valves initially open to prevent cavitation of the pump.
6) During the time delay while filling the system with water the discharge valve may be throttled to prevent water hammer.
7) If the water for the circulating water pump is taken from a lake or river, screens may be used to prevent debris from collecting at the pump suction and cavitating the pump. If excessive debris plugs the screens, the water-level on the discharge side will drop, causing loss of pump suction.
8) Another cause of water-level drop on the discharge side of the screen may be in climates where the temperature of the cooling water can drop to the point where ice will begin to form on the surface even though the water is moving. To prevent this icing condition, gates are built into the intake channel so that part of the discharge water may be circulated back into the intake.

Copyright © 1985 IEEE All Rights Reserved

Copyright The Institute of Electrical and Electronics Engineers, Inc.
Provided by IHS under license with IEEE
No reproduction or networking permitted without license from IHS
Not for Resale

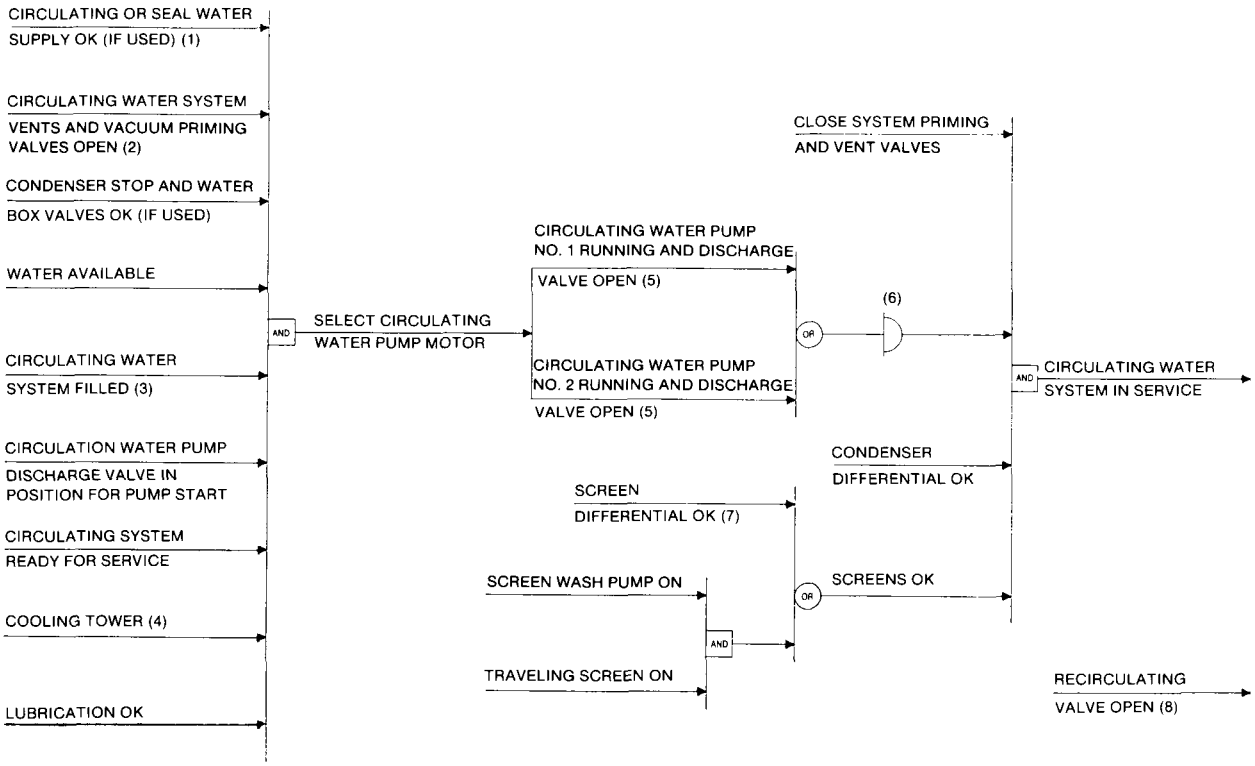

Figure 5—Circulating Water System

5. Service Water Cycle

The cooling or service water system provides cooling water to unit and auxiliary equipment to regulate temperatures and prevent damage from overheating.

Where possible, the source of pump suction should be cool, clean water; or if high head is involved, from a tap at the discharge of the circulating water pump. If the supply of cooling water is not large enough to handle the system's cooling requirements, a supplementary cooling system is employed which utilizes either an open or closed loop with a source of makeup water. As in the circulating water system, site climate may require freeze protection.

An isolated closed cooling water system for a water source that is dirty or brackish is often used for supplying cooling water to small passages such as bearings and coolers.

Figure 6 is a typical flow diagram for the service water system. The coolers referred to may include bearings, transformers, generator and hydrogen heat exchangers, and other equipment requiring water flow for cooling.

Copyright © 1985 IEEE All Rights Reserved

Copyright The Institute of Electrical and Electronics Engineers, Inc.
Provided by IHS under license with IEEE
No reproduction or networking permitted without license from IHS
Not for Resale

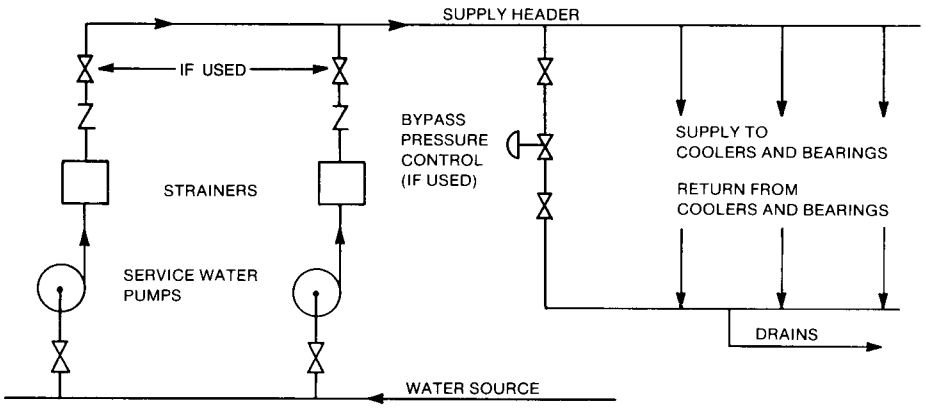

Figure 6—Service Water Flow Diagram

Figure 7 is the logic diagram for the service water system.

1) Water of sufficient head and volume should be available for cooling and sealing purposes before a service water pump is started. To ensure that the water is clean, strainers are used. With a heat exchanger system, an auxiliary circulating water pump(s) has to be put in service at this time.
2) The service water pump shall be properly primed.
3) Refer to Fig 3 for the details of prestart and poststart checks. In some cases, the checks represent a minimum list; in others, the checks do not apply.

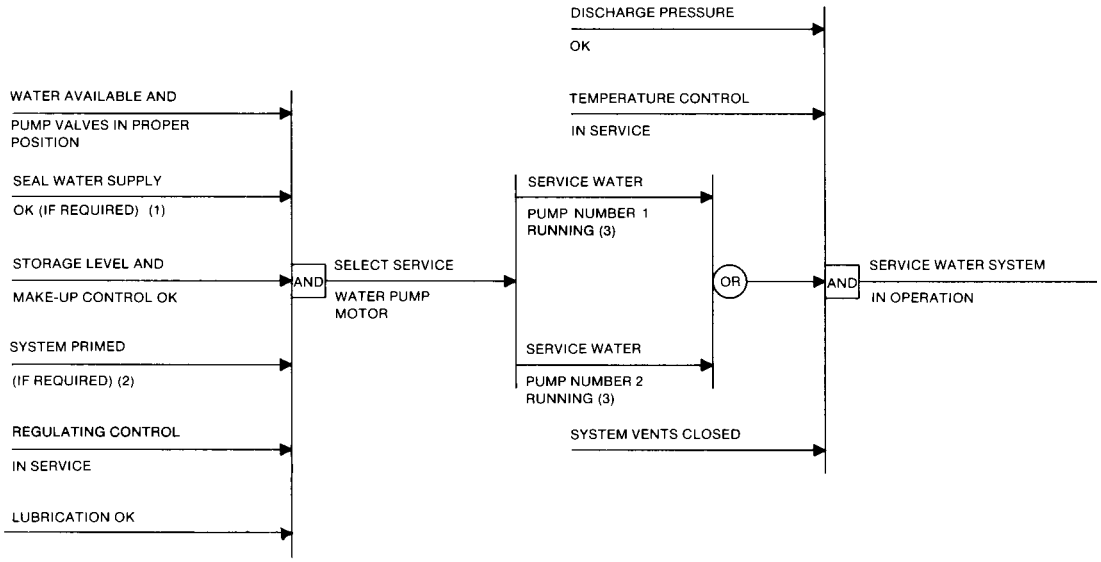

Figure 7—Service Water System

6. Condensate and Feedwater System

This system is the water system link between the hotwell and the boiler. Variations include using a deaerating condenser, or an open deaerating heater with a storage tank. The condensate pump shall provide sufficient head to overcome deaerator pressure or sufficient suction head for the boiler feed pump if no deaerator is furnished. The recirculating valve (minimum flow valve) is opened to ensure minimum flow through the pump.

Copyright © 1985 IEEE All Rights Reserved

Copyright The Institute of Electrical and Electronics Engineers, Inc.
Provided by IHS under license with IEEE
No reproduction or networking permitted without license from IHS
Not for Resale

With a deaerating condenser or an open deaerating heater with a storage tank, the vacuum system is started and condensate recirculated during low-load (low flow) conditions to prevent introducing aerated water to the boiler. Figures 8 and 9 represent typical flow diagrams for this system.

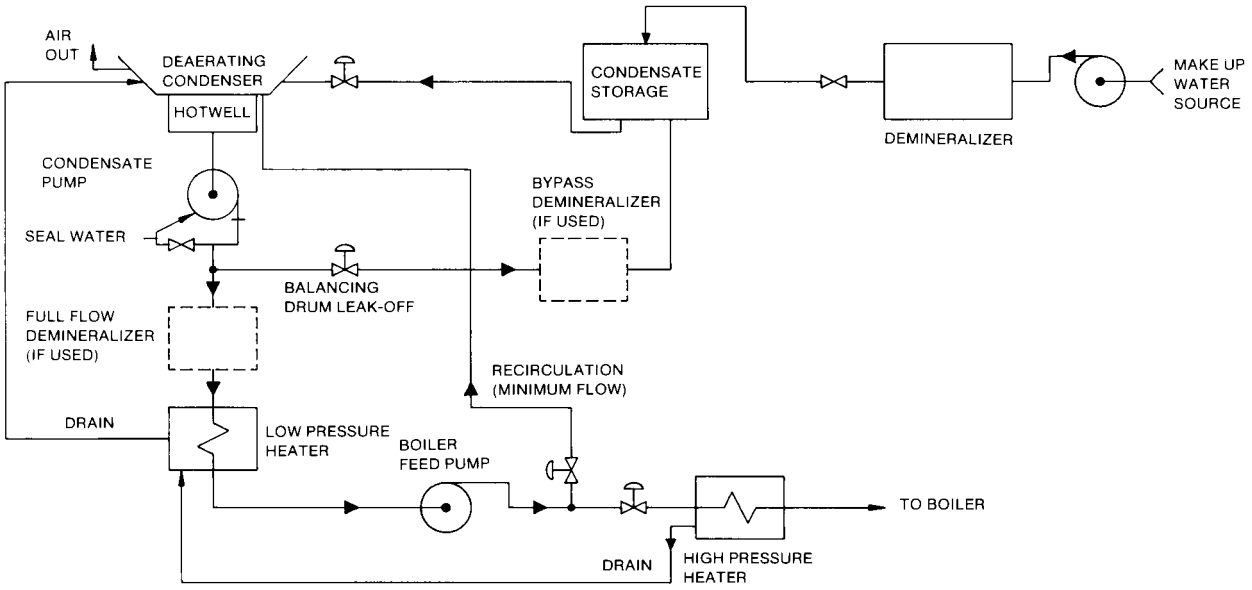

Figure 8—Typical Condensate and Feedwater (Deaerating Condenser)

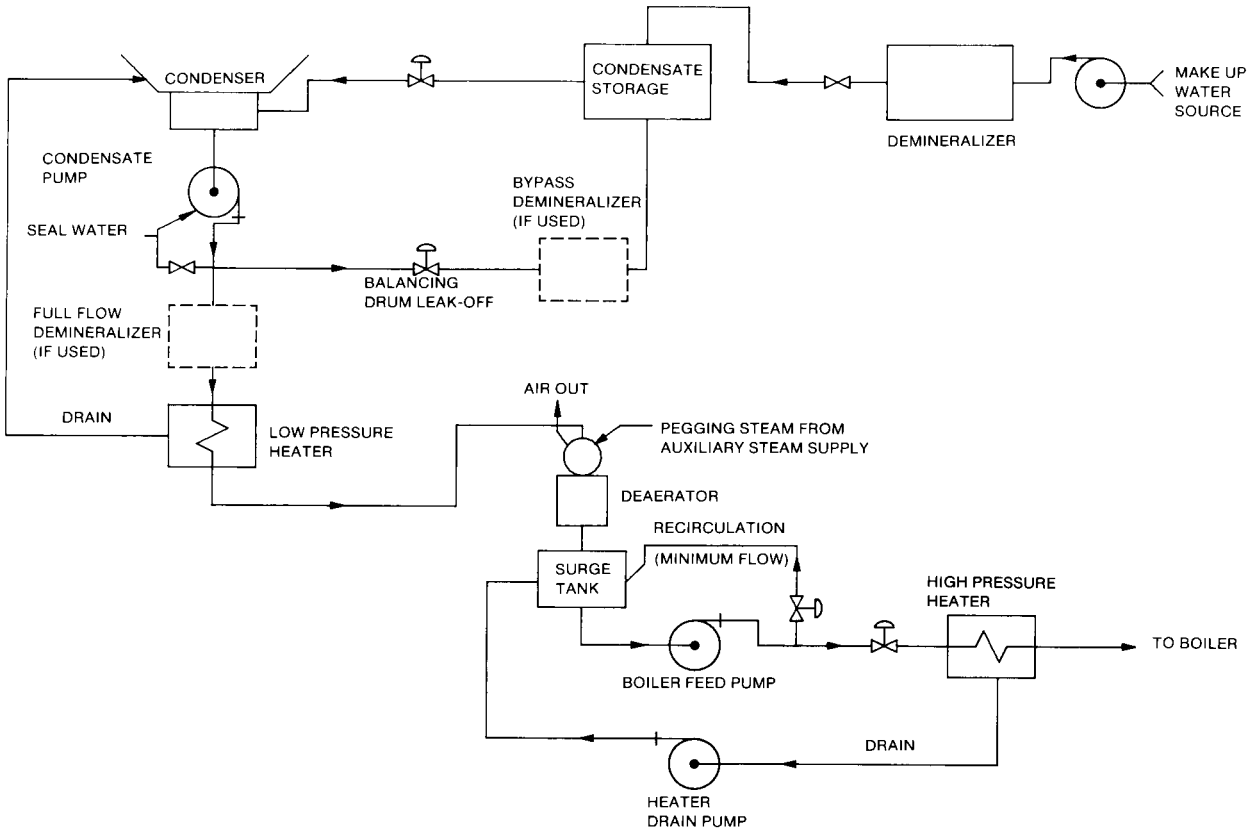

Figure 9—Typical Condensate and Feedwater (Open Deaerating Heater)

Copyright © 1985 IEEE All Rights Reserved

Copyright The Institute of Electrical and Electronics Engineers, Inc.
Provided by IHS under license with IEEE
No reproduction or networking permitted without license from IHS
Not for Resale

Heater and pumps have been grouped, since the quantity of each is a detail of the cycle design. Similarly, check valves and isolating valves associated with control valves have been omitted, as have the usual level control subloops on the heaters.

The condensate pump recirculation line has been combined with the return line to condensate storage for simplicity. In many cases, it is a separate line direct to the hotwell.

There are two cycles in use. One uses a deaerating condenser as shown in Fig 8. The other uses an open low-pressure heater as a deaerator and includes a surge or storage tank, as shown in Fig 9.

The basic difference in the two cycles is the location for deaeration of the condensate. In Fig 8, the deaeration is done in the condenser so that all drains are returned to the condenser with the boiler feed pump bypass discharge and balancing drum leak-off. The condensate pump has to provide the necessary net positive suction head (NPSH) for the boiler feed pump, or its suction booster if used. In Fig 9, the deaeration is done in the open deaerating heater which, with its storage tank, is usually elevated to provide NPSH for the boiler feed pump. In this case, the feed pump minimum flow bypass discharge and balancing drum leak-off are returned to the deaerator along with the high-pressure heater drains by the high-pressure drain pump.

Figure 10 is the logic diagram for the condensate and feedwater system with an open deaerating heater.

1) Refer to Section 3., Fig 3, for large motor starting logic diagram.
2) The condensate system is normally started with the condenser vacuum system in operation.
3) With the deaerating heater, low-pressure steam from an auxiliary source is introduced. When normal steam supply is not available to the deaerator, an auxiliary supply shall supply adequate pressure for pegging. When the deaerator storage tank level is adequate to provide sufficient NPSH, the feed pump may be started. With feed pumps running, water is recirculated back to the deaerator until the flow to the boiler exceeds the feed pump minimum flow.
4) Water quality is monitored by the operator to ensure that it is of sufficient purity before allowing flow into the boiler.
5) The boiler feed pump may be either motor driven or turbine driven. Some plants have a motor driven start-up boiler feed pump and then switch over to turbine-driven feed pumps after the boiler is up to pressure and the turbine-generator has been synchronized to the system.

Copyright © 1985 IEEE All Rights Reserved

Copyright The Institute of Electrical and Electronics Engineers, Inc.
Provided by IHS under license with IEEE
No reproduction or networking permitted without license from IHS
Not for Resale

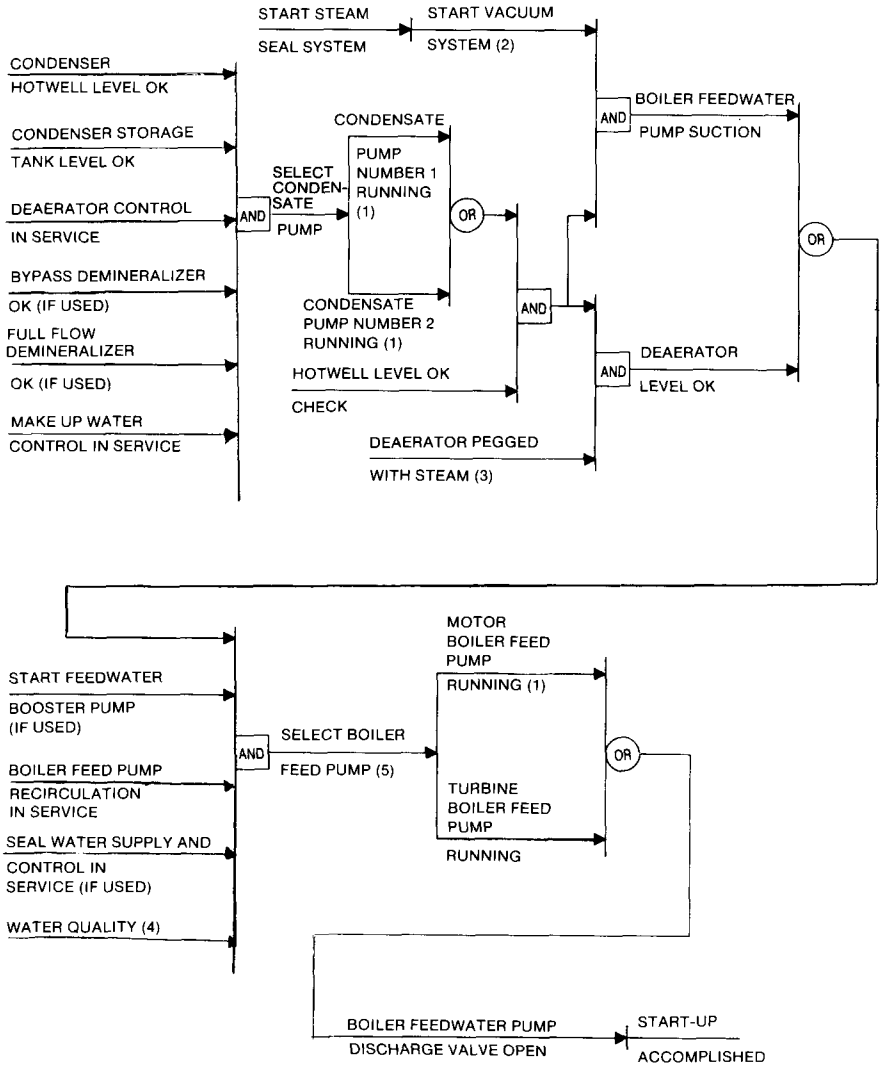

Figure 10—Condensate and Feedwater System

If the plant has only turbine-driven boiler feed pumps, then an auxiliary source of steam shall be supplied to start-up the feedwater system until the boiler has been brought on the line and steam is available to change over the steam supply.

The auxiliary steam supply may be from a package boiler used for other independent steam sources or the steam leads of an adjacent turbine-generator unit.

7. Boiler Water

The boiler water system includes the water walls, economizer, boiler drum (if used), and is integral with the steam system.

There are two types of boilers described in the following sections. The first is the drum-type boiler which can have either natural circulation or controlled circulation, and the second is the once-through forced circulation boiler. Temperature, water level (drum-type boilers only), flow, and pressure are important items to monitor. Water purity is

Copyright © 1985 IEEE All Rights Reserved

Copyright The Institute of Electrical and Electronics Engineers, Inc.
Provided by IHS under license with IEEE
No reproduction or networking permitted without license from IHS
Not for Resale

very important, particularly for once-through boilers, since there is no boiler drum to separate suspended solids. Steam temperature control is achieved by tilting burners, manipulating of convection bypass dampers, controlling the rate and method of firing, recirculating of hot gases, and by injecting water as a spray into steam flow to cool the steam.

Design differences occur among the boiler manufacturers for once-through boilers. Each manufacturer has a unique system of valve symbols and boiler water cycle design. Thus, each boiler manufacturer should be consulted for specific design requirements.

7.1 Drum Boiler

Figure 11 is a typical flow diagram for a drum-type boiler with superheat and single reheat.

1) Some installations have a separate boiler fill pump that is used during start-up and shutdown.
2) The ASME Code, Boiler and Pressure Vessel Code, Section PG-58 [6][3], requires a feedwater stop check valve at the economizer inlet, in addition to the feedwater flow control valve.
3) The economizer circulation valve is opened during the start-up cycle when there is no feedwater flow demand to provide circulation through the economizer and prevent the economizer from being boiled dry.

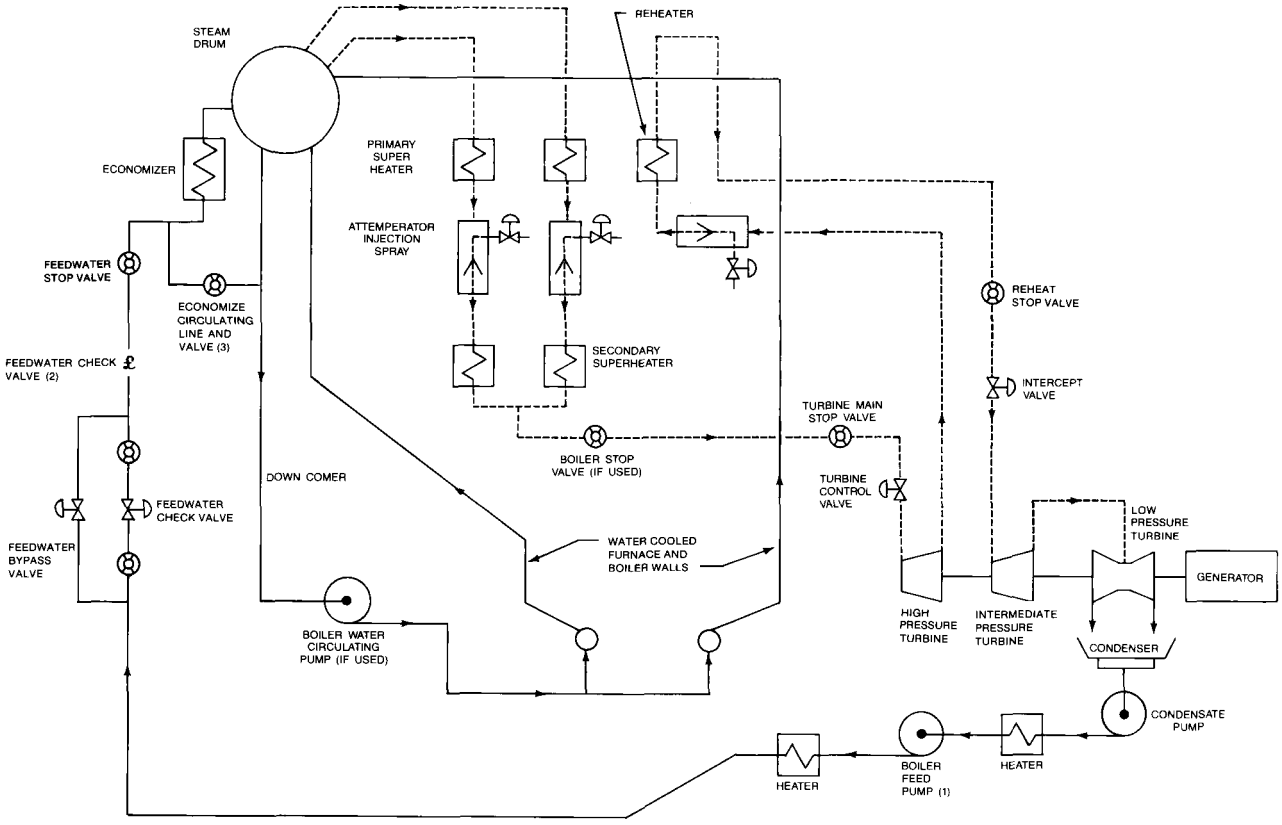

Figure 11—Drum Boiler Cycle Diagram

Figure 12 is the logic diagram for a drum-type boiler.

1) The plant auxiliary system in service is covered in Section 3.
2) Start-up of the feedwater system is covered in Section 6.

[3]Numbers in brackets correspond to those of the references in 1.2 of this guide.

Copyright © 1985 IEEE All Rights Reserved

Copyright The Institute of Electrical and Electronics Engineers, Inc.
Provided by IHS under license with IEEE
No reproduction or networking permitted without license from IHS
Not for Resale

3) Preparing to fire is covered in Section 8.
4) The start-up check for rate of temperature and pressure rise represents a continuous monitoring procedure carried on concurrently with other checks to ensure that no parts of the boiler experiences excessive rates of temperature rise or temperature differentials as established for the particular boiler. These may include gas temperature entering the superheater, superheater metal temperature, drum metal temperature, drum level, etc.
5) The turbine vacuum system and the rolling and synchronizing of the turbine-generator are covered in Section 9.
6) The rate of load increase depends on temperature limits of the turbine and boiler. Boiler pressure or rate of change may be limited due to water chemistry considerations.

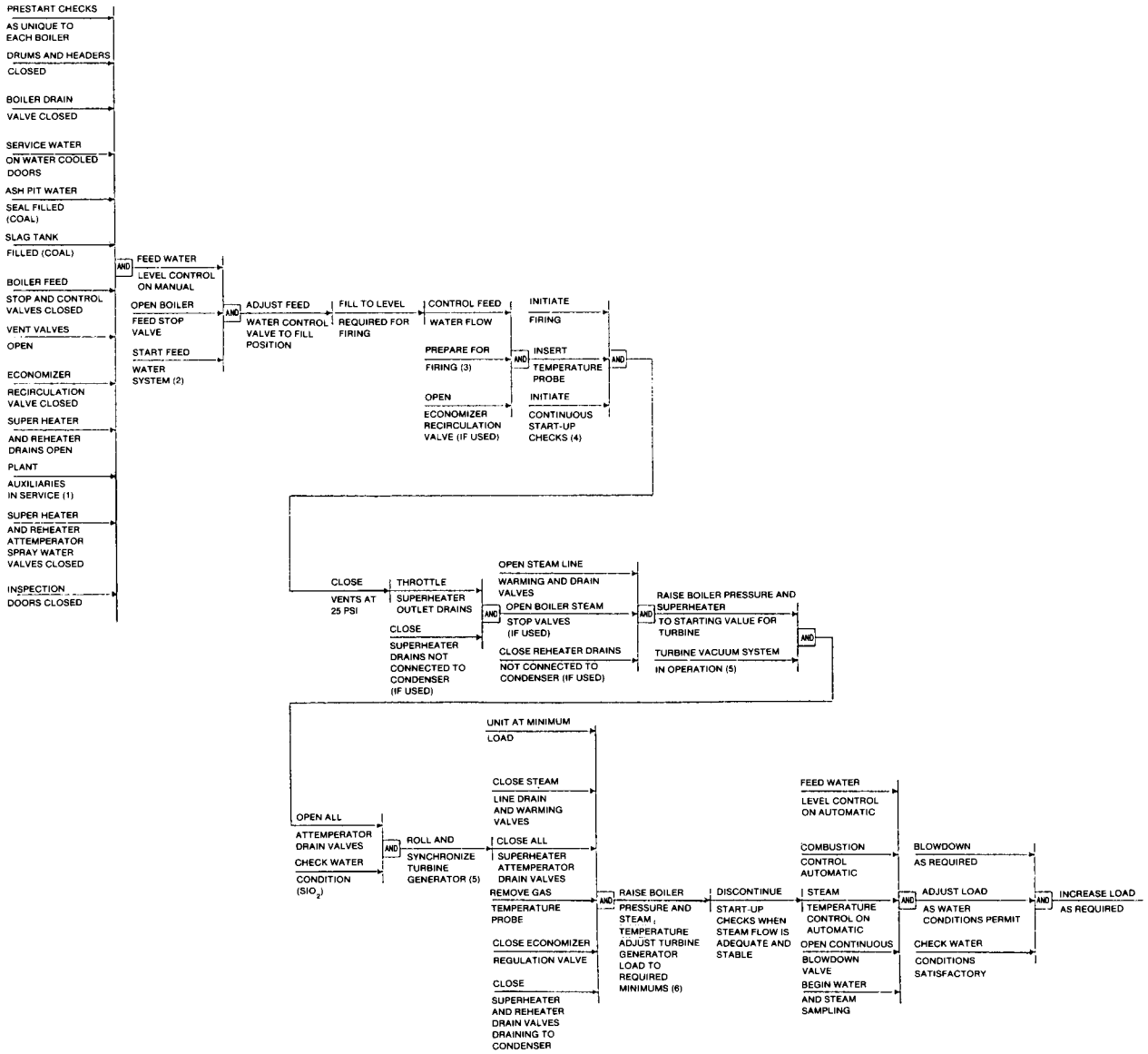

Figure 12—Start-Up of Drum Boiler

Copyright © 1985 IEEE All Rights Reserved

Copyright The Institute of Electrical and Electronics Engineers, Inc.
Provided by IHS under license with IEEE
No reproduction or networking permitted without license from IHS
Not for Resale

7.2 Once-Through Boiler

Once-through boilers differ from the drum-type boiler in that the boiler drum is eliminated. They receive feedwater at one end of a continuous tube (actually a great number of such once-through circuits discharging into a common outlet), and discharge steam at the other end.

Once-through boilers may operate at sub-critical or super-critical pressures, whereas drum boilers always operate at sub-critical pressures. The critical pressure of steam occurs at 3208.2 psia, and the saturation temperature at this pressure is 705.5 °F (374.2 °C). The state point defined by the critical pressure and temperature is known as the critical point, the point at which steam and water have the same density. At pressures above the critical pressure, no saturation temperature exists, there is no differentiation between the liquid and vapor phases, and boiling does not occur.

The once-through boiler requires adequate water flow through the boiler and high heat absorbing circuits to limit the variations in flow distribution and to keep the metal temperatures below allowable limits. Water flow shall be established through the boiler circuits before the unit can be fired and shall be maintained at all times while the unit is being fired, including start-up and low-load operation.

This is accomplished in some once-through boiler designs with a bypass system consisting of a superheater bypass and a flash tank which accepts the minimum flow and directs the water and steam to other locations. In other system designs, it is accomplished with a recirculation pump and a reduced capacity bypass system. The bypass system also permits cleanup of water, controls steam conditions to the turbine, and provides steam for auxiliary functions and for warming and rolling the turbine. The bypass system also permits control of boiler pressure at low loads, control of the turbine steam pressure before the turbine is in operation, and prevents water from entering the secondary superheater during hot restarts.

Many variations exist when comparing the start-up systems provided by each of the domestic once-through boiler manufacturers. Notice in Figs 13, 14, 15, and 16 the physical differences of the start-up system cycle diagrams illustrated for each of the domestic once-through boiler manufacturers. Two designs, A and B, require that a minimum pumping rate be established to circulate fluid through the furnace and convection walls to protect tubes from overheating. Two designs, C and D, provide circulating pumps to recirculate fluid to provide the same protection.

Because of these individual differences, control systems vary on each once-through unit insofar as the actual coordination of the valves in each start-up system and the valve symbol used.

However, the following functional objectives of all once-through boiler start-up systems are the same.

1) All systems provide protection to keep furnace tubes from overheating by maintaining a minimum flow of fluid through the furnace. Care shall be taken to keep the pressure of the fluid in the furnace circuit at a pressure well above saturation, thus, preventing any flashing from occurring in the furnace circuit.
2) All systems provide some means of circulating condensate through a polishing system for a cold and hot water clean-up.
3) All systems provide for an orderly sequence to start-up and initially load the unit as follows:
    a) By controlling flow to the flash tank or separator during start-up, provisions are made for hot clean-up operation and initial build-up of enthalpy.
    b) To assist in building up the heat in the boiler in a minimum time, both the water and steam in the flash tank are put back into heat recovery in the deaerator or feedwater heaters, or both, during start-up and low-load operation.
    c) When the enthalpy level in the flash tank or separator reaches some minimum desired level, steam can be admitted to the superheated and main steam lines for warming purposes.
    d) By bypassing steam to the condenser through a turbine bypass valve while regulating the heat input, better matching of steam temperature to turbine metal temperature is achieved prior to rolling the turbine. This method of prewarming the turbine can also be used with a drum-type boiler.

Copyright © 1985 IEEE All Rights Reserved

Copyright The Institute of Electrical and Electronics Engineers, Inc.
Provided by IHS under license with IEEE
No reproduction or networking permitted without license from IHS Not for Resale

e) Until the iron content of the water leaving the boiler convection pass enclosure is reduced to an acceptable level, the firing rate is adjusted to keep the water temperature at this location below an established limit.

f) The turbine bypass valves function to provide warming steam to heat steam lines. By closing the turbine bypass valves while simultaneously opening the main turbine stop valve or main turbine stop valve bypass, it is possible to establish steam flow through the superheater to roll and synchronize the turbine with minimum boiler upsets.

g) Following synchronization, the turbine load is increased using the flash tank or separator steam. For the pumped systems, once flow is sufficient, the flash tank or separator is taken out of service. The boiler manufacturer's start-up procedure shall be followed.

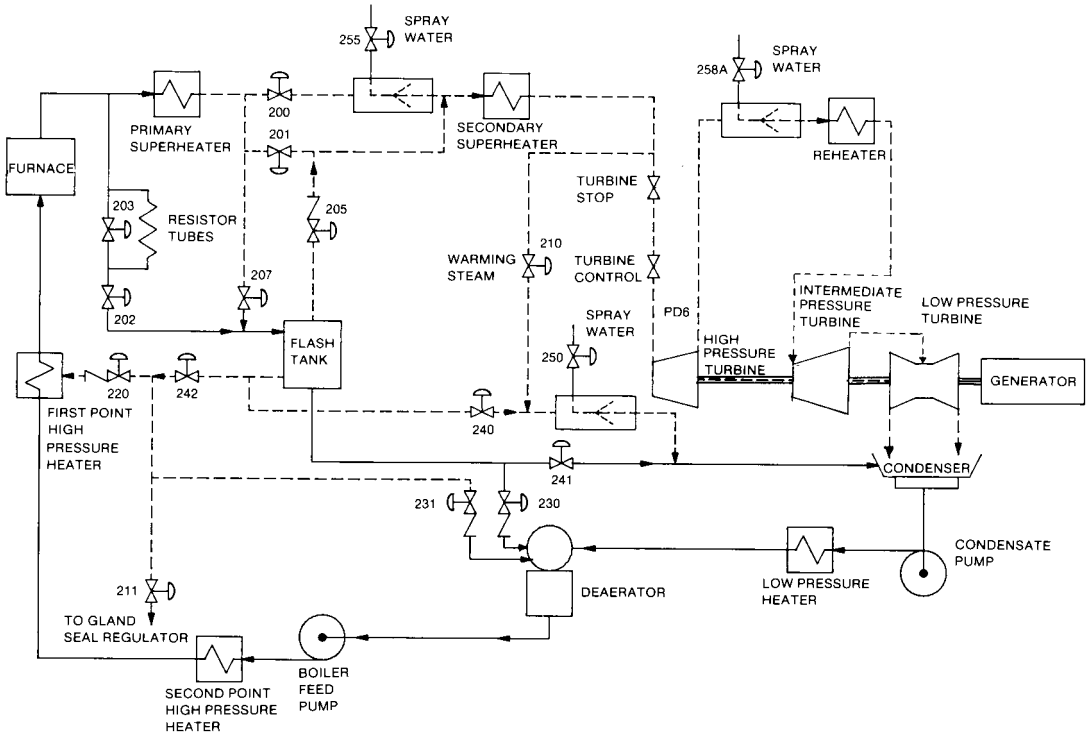

Figure 13—Once-Through Boiler Cycle Diagram-Design A

Copyright © 1985 IEEE All Rights Reserved

Copyright The Institute of Electrical and Electronics Engineers, Inc.
Provided by IHS under license with IEEE
No reproduction or networking permitted without license from IHS
Not for Resale

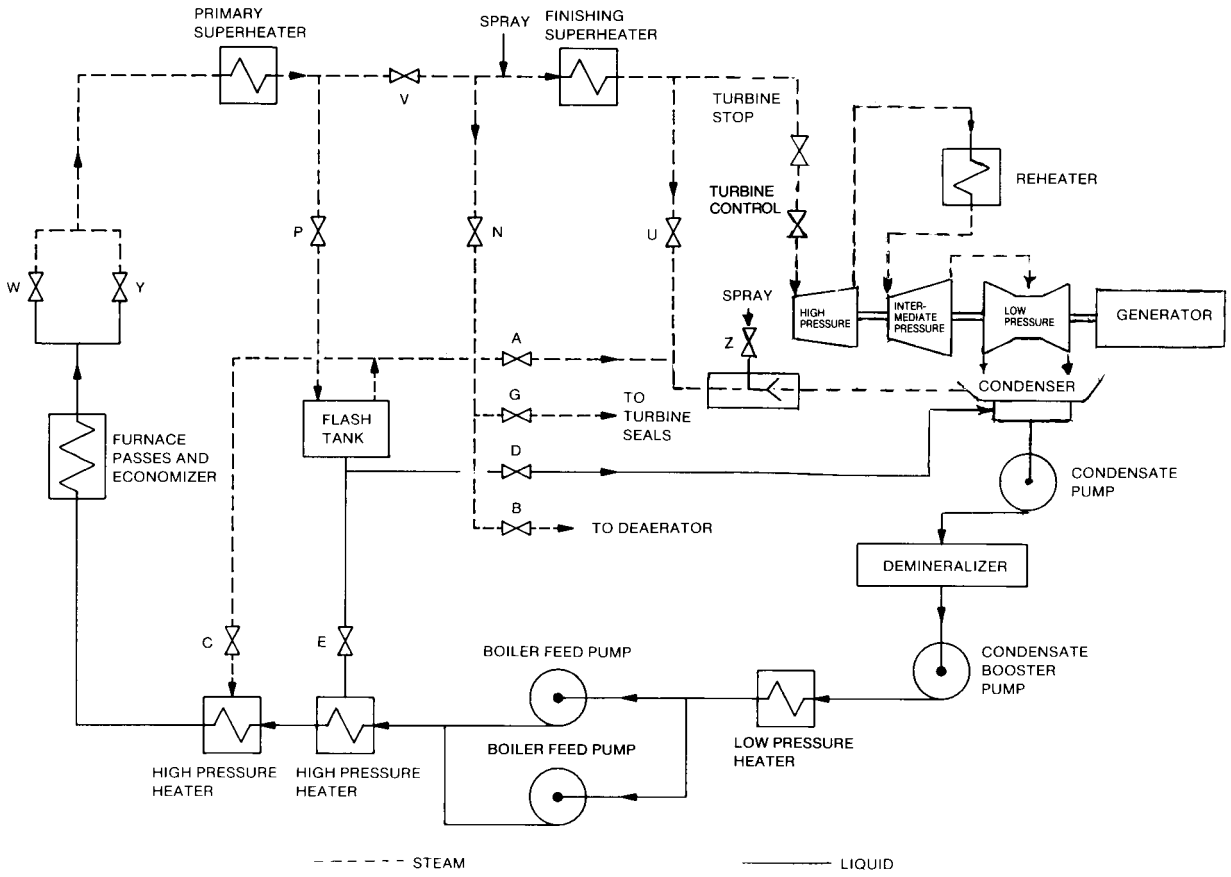

Figure 14—Once-Through Boiler Cycle Diagram—Design B

Copyright © 1985 IEEE All Rights Reserved

Copyright The Institute of Electrical and Electronics Engineers, Inc.
Provided by IHS under license with IEEE
No reproduction or networking permitted without license from IHS
Not for Resale

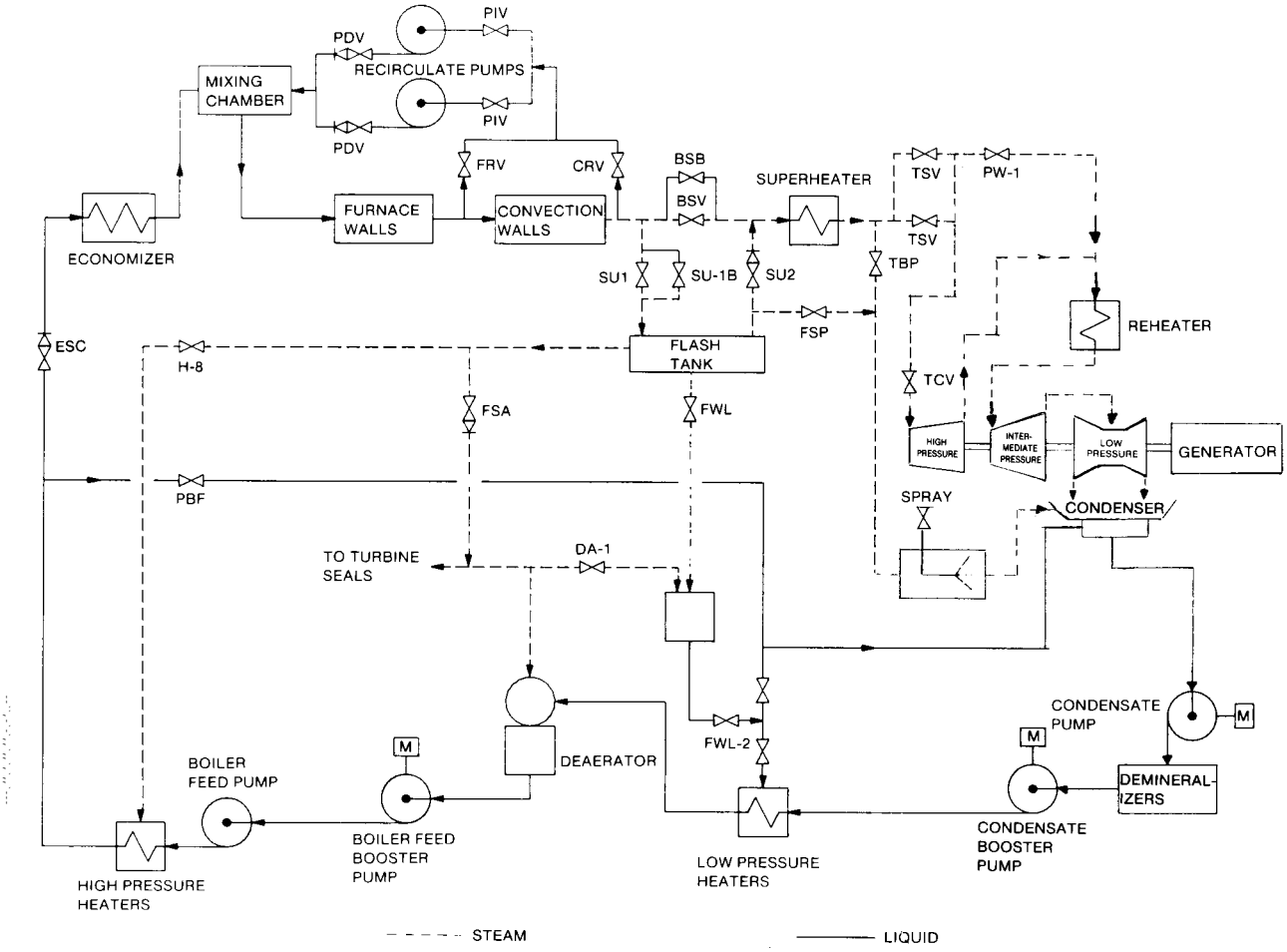

Figure 15—Once-Through Boiler Cycle Diagram—Design C

Copyright © 1985 IEEE All Rights Reserved

Copyright The Institute of Electrical and Electronics Engineers, Inc.
Provided by IHS under license with IEEE
No reproduction or networking permitted without license from IHS
Not for Resale

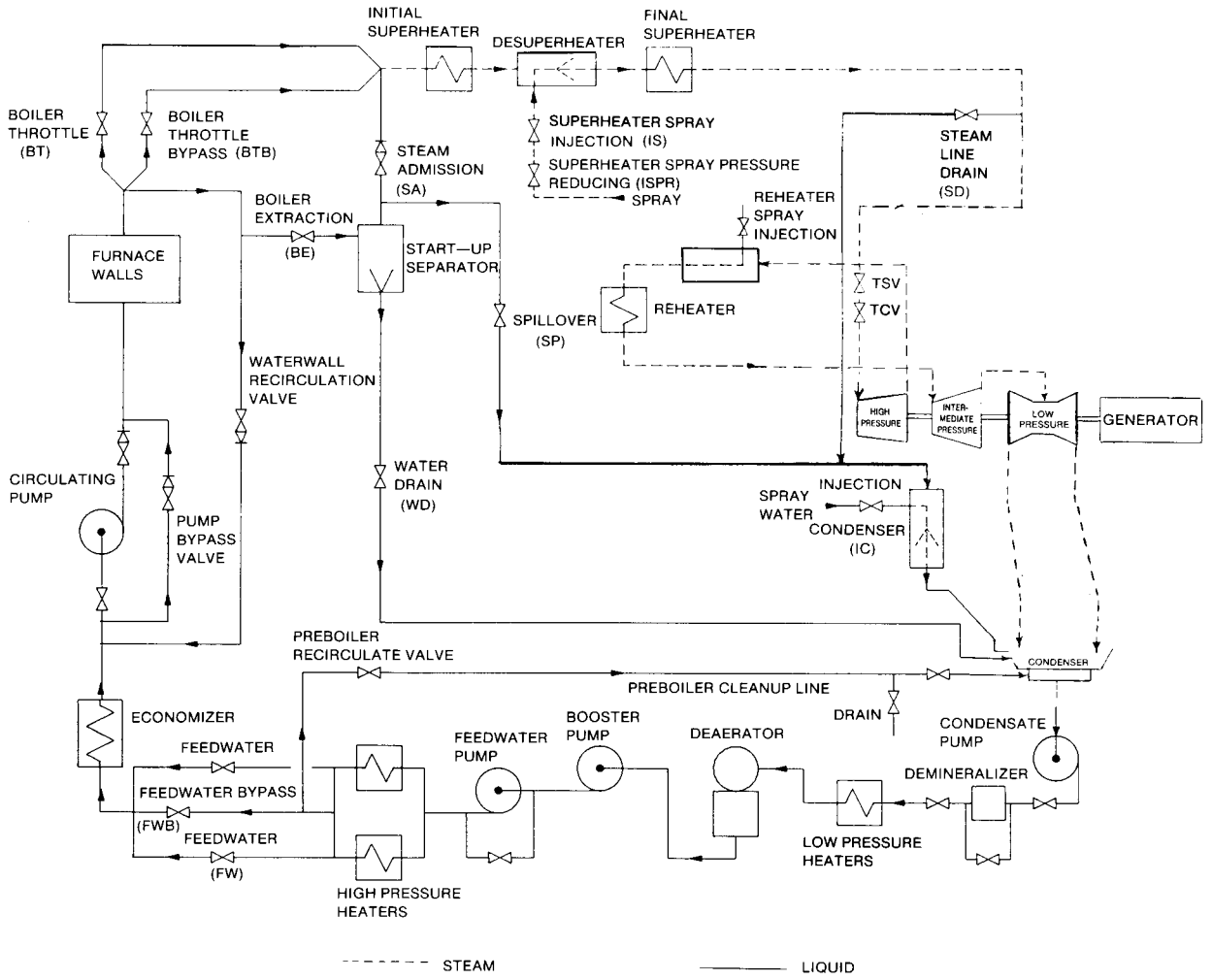

Figure 16—Once-Through Boiler Cycle Diagram—Design D

Control systems shall be properly designed to meet the following requirements during start-up and initial loading of the unit:

1) Furnace circuit pressure shall always be maintained.
2) Throttle pressure is increasing during this period; thus, the amount of stored fluid and heat shall be increased. Load and steam temperature are increasing, which also demands additional heat and fluid storage.
3) Saturated steam from the flash tank or separator to the superheater is being replaced with steam directly from the evaporating section of the boiler. By properly programming the opening of the in-line stop valves and by changing the pumping and firing rate, outlet steam temperature can be maintained during this transfer to straight-through operation.

Thus, during start-up and low-load operation prior to the turbine load exceeding the minimum feedwater flow, the control system shall utilize the bypass system valves as an extension of pressure control and feedwater flow control. During this period, the heat input shall be properly controlled to provide the required steam conditions at the turbine, recognizing that some heat is lost through the bypass system until it is taken out of service.

Since the once-through boiler cycle varies among manufacturers, Figs 13, 14, 15, and 16 provide a cycle diagram for each of the major once-through boiler manufacturers.

Copyright © 1985 IEEE All Rights Reserved

Copyright The Institute of Electrical and Electronics Engineers, Inc.
Provided by IHS under license with IEEE
No reproduction or networking permitted without license from IHS
Not for Resale

8. Furnace Air and Fuel System

The furnace air and fuel system include the boiler air, flue gas, and fuel control. Parts of this system are: forced and induced draft fans and associated dampers for air supply, fuel oil pumps, oil and gas valves, pulverizer mills and feeders, oil, gas, and coal burners, and associated dampers or registers. Protection against explosion and implosion by utilizing correct procedures and sequences, especially during start-up, is important. On balanced draft units, protection against the possibility of furnace implosions shall be considered in the design of fan and damper control and interlocks for start-up, shutdown, and especially for fuel trips.

Prior to light-off, the furnace shall be purged with air to remove unburned fuel. An air-flow rate greater than 25% of full-load flow shall be maintained for a period of at least 5 min.

Following the furnace purge, the fuel firing sequence may be initiated after proof of ignition with flame detection. The firing rate may be increased while maintaining adequate air-to-fuel ratio without reducing air flow below 25%.

Monitoring of air and fuel systems should include air flow, air pressure, air temperature, ratio of air to fuel flow, flame stability, fuel flow and pressure, motor current, and unit load compared to firing rate. This is especially important during unit start-up or shutdown.

These furnace air and fuel comments are in accordance with National Fire Protection Association recomendations on gas, oil, and coal boiler operation and intend to reflect and supplement rather than replace ANSI/NFPA 85A-1982 [1], ANSI/NFPA 85B-1978 [2], ANSI/NFPA 85D-1978 [3], ANSI/NFPA 85E-1980 [4], and ANSI/NFPA 85G-1982 [5].

8.1

Figure 17 shows the logic diagram sequence for start-up of the boiler air and fuel system for both a cold or hot start.

1) Furnace and gas passages in good repair and free of foreign material.
2) Boiler evacuated by all personnel and all access and inspection doors closed.
3) All fuel shut-off valves shall be closed before starting fans and fuel pumps to prevent inadvertent admission of fuel prior to and during the purge cycle.
4) All air or flue gas flow control dampers operated through full range to check operating mechanism and then set at a position that will allow the fans to be started without over or under pressuring any part of the boiler.
5) The presence of combustibles should be checked during and after the purge period.
6) If the air heater is shut down when the boiler is tripped, it should be restarted as soon as possible to prevent seizing due to unequal expansion while stopped. When the air flow is maintained greater than 25% for starting, the air heater may be started before initial firing for all fuels.
7) If the boiler has only FD fans, start the air heaters and then select FD fans and proceed with purge preparations. If it is a balanced draft unit, start both ID and FD fans. Fan start shall be programmed to maintain furnace pressure within design limits. The ID fan is started before the FD fan.
8) On a boiler fuel trip with the fans remaining in operation, the air flow may be decreased slowly to the purge rate.
9) When the purge flow rate of 25% has been maintained for the minimum time of 5 min, the master fuel trip can be reset and light-off initiated according to the open register light-off system described in ANSI/NFPA 85A-1982 [1], ANSI/NFPA 85B-1978 [2], ANSI/NFPA 85D-1978 [3], ANSI/NFPA 85E-1980 [4], and ANSI/NFPA 85G-1982 [5].

Copyright © 1985 IEEE All Rights Reserved

--`,,`--`,,`,,`,`,,`---
Copyright The Institute of Electrical and Electronics Engineers, Inc.
Provided by IHS under license with IEEE
No reproduction or networking permitted without license from IHS
Not for Resale

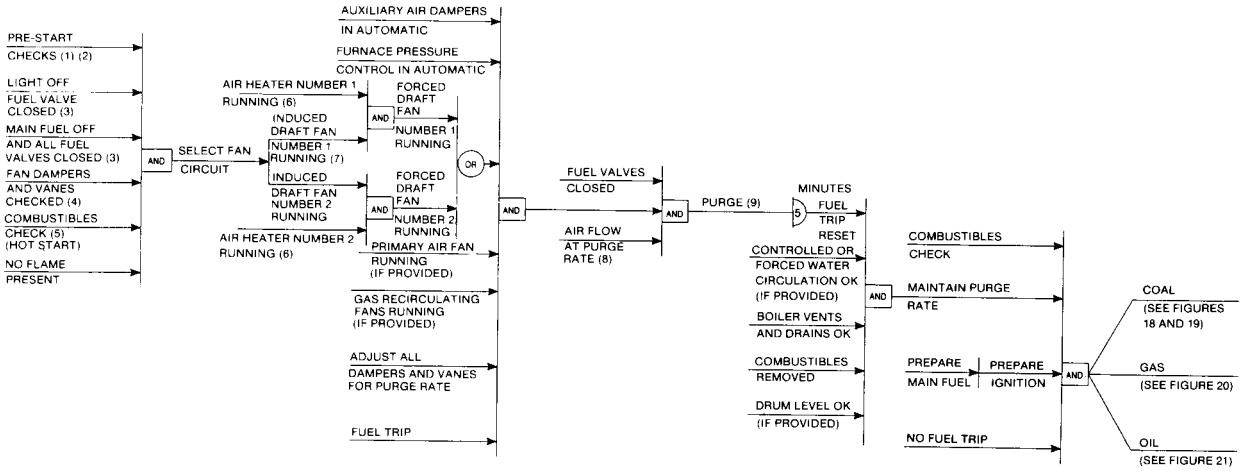

Figure 17—Cold or Hot Start-Up

Figures 18, 19, 20, and 21 cover the start-up sequences for the four common methods of firing a boiler: pulverized coal, crushed coal in a cyclone furnace, natural gas, or fuel oil.

For single fuel furnaces, burning gas or oil, the user will follow the appropriate diagram for both ignition and main fuels. Where ignition is different from main fuel, it will be necessary for the user to extract the ignition portion of the proper diagram and include it with his main fuel firing diagram.

8.2

Figures 18 and 19 are the logic diagrams for coal firing.

1) Light the igniters on all burners served by the pulverizer to be started. After making sure that the igniters are lighted and are providing appropriate ignition energy for the main burner, start the pulverizing equipment following the equipment manufacturer's recommendation.
2) Where applicable mill inerting system proven available for use upon protective mill trip or master fuel trip.
3) Adjust air flow to coal light off position if different from that required for igniter light off.
4) Time delay for cooling burner on restart of mill on a hot furnace. Time varies with burner design and fuel characteristics.
5) Time required for establishing flame depends on characteristics of the installation.

Copyright © 1985 IEEE All Rights Reserved

--`,,`-`-`,,`,,`,`,`,`---

Copyright The Institute of Electrical and Electronics Engineers, Inc.
Provided by IHS under license with IEEE
No reproduction or networking permitted without license from IHS Not for Resale

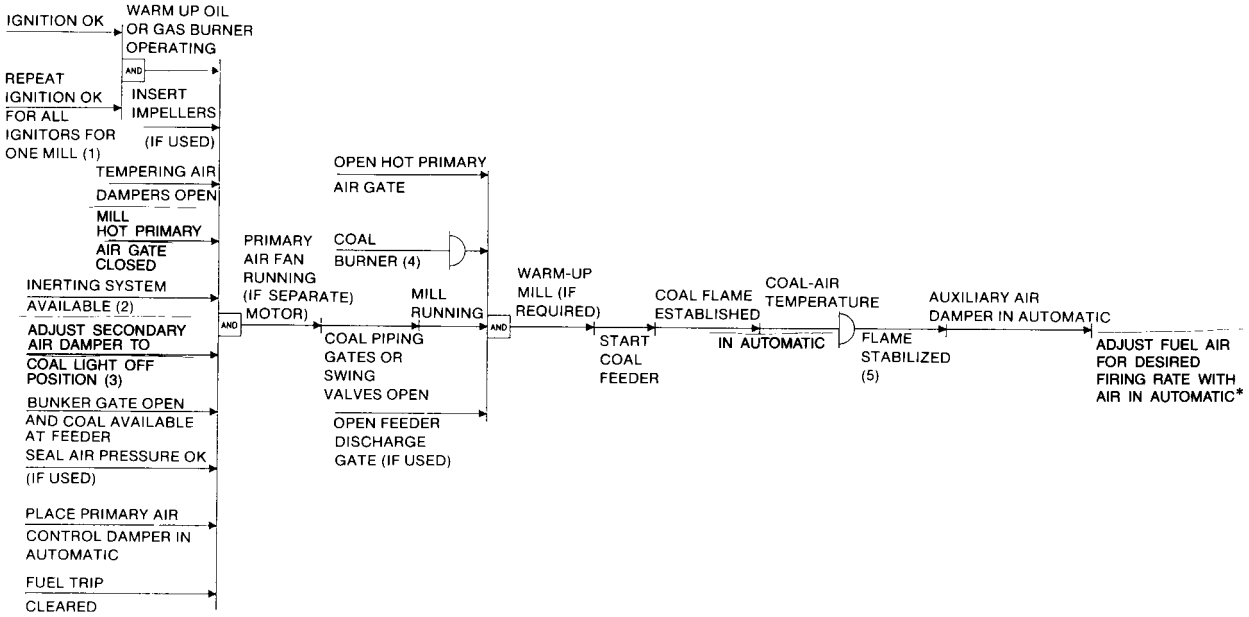

NOTE — Interrupted igniters (small capacity or Class 3) shall be shut down at this time to avoid supporting main flame ignition. Continuous or intermittent igniters (large capacity Class 1 or 2) should be left in service until stable main flame is established. See ANSI/NFPA 85A-1982 [1], ANSI/NFPA 85B-1978 [2], ANSI/NFPA 85D-1978 [3], ANSI/NFPA 85E-1980 [4], and ANSI/NFPA 85G-1982 [5] for definition of igniter classification.

Figure 18—Coal Firing — Pulverized

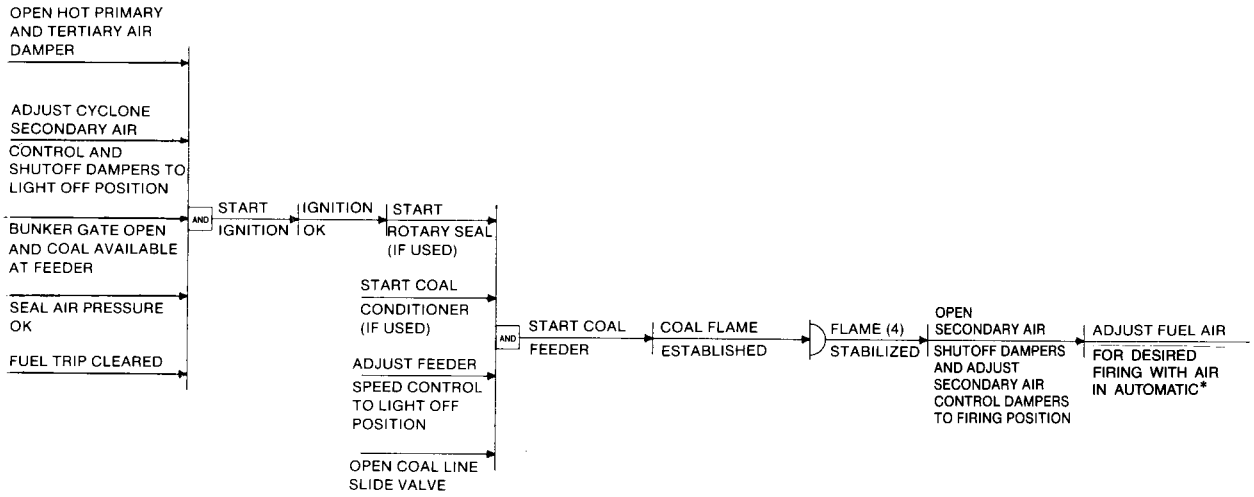

NOTE — Interrupted igniters (small capacity or Class 3) shall be shut down at this time to avoid supporting main flame ignition. Continuous or intermittent igniters (large capacity Class 1 or 2) should be left in service until stable main flame is established. See ANSI/NFPA 85A-1982 [1], ANSI/NFPA 85B-1978 [2], ANSI/NFPA 85D-1978 [3], ANSI/NFPA 85E-1980 [4], and ANSI/NFPA 85G-1982 [5] for definition of igniter classification.

Figure 19—Coal Firing — Cyclone

Copyright © 1985 IEEE All Rights Reserved

Copyright The Institute of Electrical and Electronics Engineers, Inc.
Provided by IHS under license with IEEE
No reproduction or networking permitted without license from IHS
Not for Resale

8.3

Figure 20 is the logic diagram for natural gas firing.

1) Where two main shutoff valves are provided, it will be necessary at this point to open and latch the main gas trip valve and then to open the main gas stop valve.
2) Where a separate header has been provided for ignition gas, it will be necessary to open the stop valve in the line to this header.
3) The gas header and other vents are operated at the appropriate time.
4) This operation may be in two steps: (a) Select row of burners to be used; (b) Select individual burners in the group. In this case, the igniters will probably be energized for the whole group, but gas valves will be allowed to remain closed on the burners not being used.
5) On gas firing, the ignitor and burner valves are normally a double block with a vent between and are normally operated as a unit.

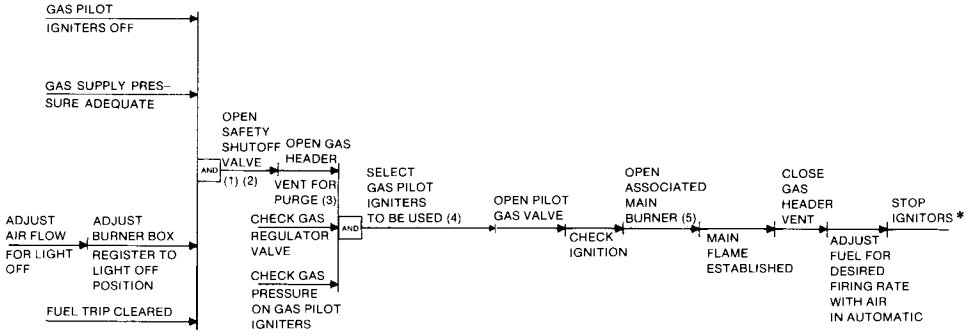

NOTE — Interrupted igniters (small capacity or Class 3) shall be shut down at this time to avoid supporting main flame ignition. Continuous or intermittent igniters (large capacity Class 1 or 2) should be left in service until stable main flame is established. See ANSI/NFPA 85A-1982 [1], ANSI/NFPA 85B-1978 [2], ANSI/NFPA 85D-1978 [3], ANSI/NFPA 85E-1980 [4], and ANSI/NFPA 85G-1982 [5] for definition of igniter classification.

Figure 20—Natural Gas Firing

8.4

Figure 21 is the logic diagram for fuel oil firing.

1) The burner stop and control valve arrangements will vary according to boiler design. On installations using a small number of high-capacity burners, a stop and control valve is usually provided for each burner. On other installations with a large number of burners arranged in banks or groups, one control valve may be used for the unit or for each group of burners with a stop valve for each burner.
2) The oil-line header up to the burner branches should be heated to proper oil atomizing temperature by circulating hot oil through the lines and back to the oil-pump suction tank or header.
3) With manually operated burners, it is usual practice to remove oil atomizers when not in use to avoid damage by overheating. On startup only those atomizers immediately required are inserted.
4) The provisions for recirculation control vary widely among burner types. It is assumed that oil return valves are provided at the end of all burner group headers. When the first burner supplied from a header is to be put into service, the return valve for the header should be throttled to ensure adequate atomizing pressure at the burner.
5) Recirculation for heating is not required with light oil. A recirculation system is frequently provided using a pressure regulating valve in the return line if the oil pumps are of the positive displacement type.

Copyright © 1985 IEEE All Rights Reserved

Copyright The Institute of Electrical and Electronics Engineers, Inc.
Provided by IHS under license with IEEE
No reproduction or networking permitted without license from IHS
Not for Resale

6) On normal igniter shutdown the igniter, or pilot torch, should be purged as soon as the oil is shut off to prevent dribbling and coking.
7) The ignition circuit including the electric spark for each igniter, or pilot torch, should be checked after the purge or just prior to introducing fuel.

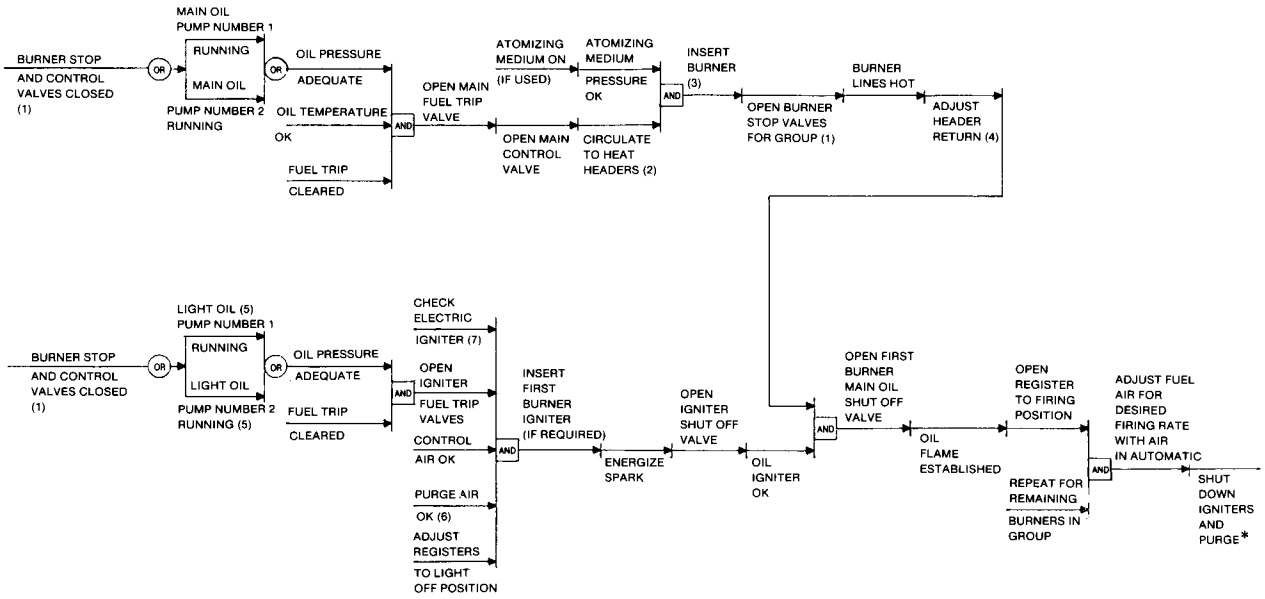

NOTE — Interrupted igniters (small capacity or Class 3) shall be shut down at this time to avoid supporting main flame ignition. Continuous or intermittent igniters (large capacity Class 1 or 2) should be left in service until stable main flame is established. See ANSI/NFPA 85A-1982 [1], ANSI/NFPA 85B-1978 [2], ANSI/NFPA 85D-1978 [3], ANSI/NFPA 85E-1980 [4], and ANSI/NFPA 85G-1982 [5] for definition of igniter classification.

Figure 21—Fuel Oil Firing

9. Turbine-Generator

The turbine-generator system converts the energy in the superheated steam from the boiler to electric power. The turbine-generator system includes the turbine main and reheat steam valves, the control and protection system, the turning gear, the lubricating and hydraulic systems, the various cooling and sealing systems, and other auxiliaries. Both tandem (high pressure, intermediate pressure, low pressure, and generator on a common shaft) and cross compound (commonly with HP, IP, and one generator on one shaft, LP and another generator on a second shaft) units are considered.

A simplified cycle arrangement for a typical tandem turbine-generator unit is shown in Fig 22.

Copyright © 1985 IEEE All Rights Reserved

Copyright The Institute of Electrical and Electronics Engineers, Inc.
Provided by IHS under license with IEEE
No reproduction or networking permitted without license from IHS
Not for Resale

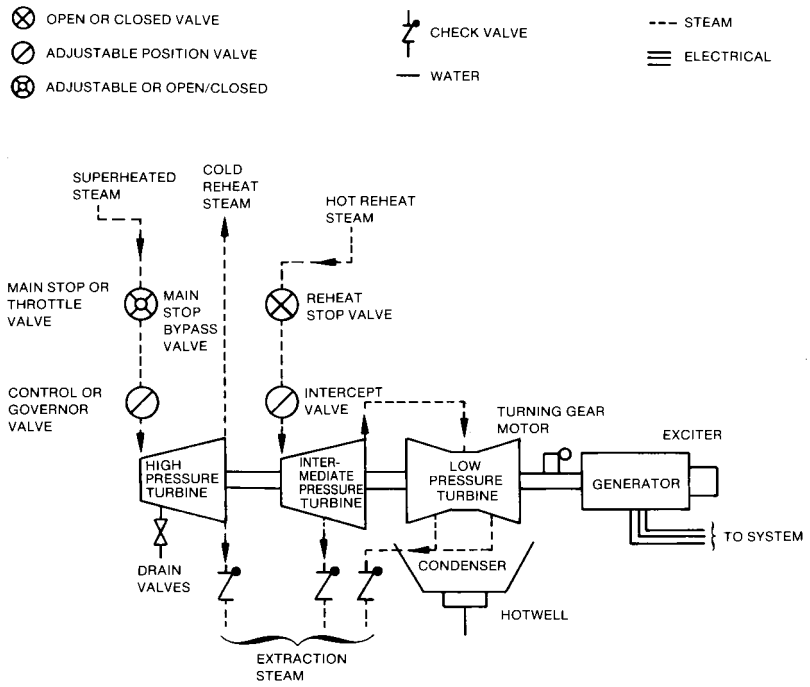

Figure 22—Simplified Arrangement of a Typical Tandem Turbine-Generator Unit

The sequential start-up logic diagrams and descriptions of turning gear, vacuum, preroll operation, roll-off to synchronizing, synchronizing, and initial loading included in this section are of a generic nature. The manufacturer's design and operating recommendations shall be used to establish the protective functions and detailed operating procedures for specific plants.

Subsequent descriptions and diagrams apply to both a mechanical-hydraulic control system and an electro-hydraulic control system. Where something applies, only to an electro-hydraulic system, it is noted by EH. An application unique to a mechanical-hydraulic system is noted by MH.

There are basic differences between the two types of systems. The mechanical-hydraulic control system uses lube oil in the range of 150 psig–350 psig (high pressure) as "muscle" to actuate the steam admission valves and in the range of 20 psig–45 psig (control) as "intelligence" to control the valve actuators. The electro-hydraulic control system uses 1500 psig–2100 psig synthetic fire-retardant fluid as "muscle" for steam valve actuation and an electrical control system to actuate servo valves controlling the hydraulic-fluid supply to the steam valve actuators.

9.1 Turning Gear Operation

The turning gear system rotates the turbine shaft(s) at low speed (2–60 r/min) to prevent rotor bowing due to gravity and thermal gradients if the rotor were stationary.

The turning gear controls allow either manual or automatic engagement and operation. Depending on the system design, the turning gear is engaged either with the motor stopped or running. The logic diagram in Fig 23 covers placing of the turbine on turning gear during a cold start.

Copyright © 1985 IEEE All Rights Reserved

Copyright The Institute of Electrical and Electronics Engineers, Inc.
Provided by IHS under license with IEEE
No reproduction or networking permitted without license from IHS
Not for Resale

1) Oil temperature should be at least 50 °F (10.0 °C) before starting pumps and at least 70 °F (21.1 °C) before placing turbine on turning gear.
2) The vapor extractors, H_2 and air side, should be running before the turbine oil system is put in service to establish a slight vacuum in the oil reservoir and consequently prevent oil vapor from leaking to the areas near the turbine-generator bearings. The vapor extractor will also remove traces of hydrogen, thereby reducing the possibility of an explosion in the oil reservoir.
3) The hydrogen seal oil system minimizes the leakage of hydrogen from the generator casing along the shaft. The H_2 seal oil pump(s) shall be operating before the generator is purged for hydrogen filling.
4) Hydrogen purity shall be maintained above 90%. A concentration of hydrogen in air in the range of 4.1%–74.2% by volume is explosive. Also, lower purities cause the generator losses to increase.
5) The bearing lube oil pressure and bearing lift oil pressure (if used) should be electrically interlocked to prevent turning gear operation unless oil pressure is adequate.
6) If there is no automatic control, regulate water flow to coolers to maintain proper oil temperature.

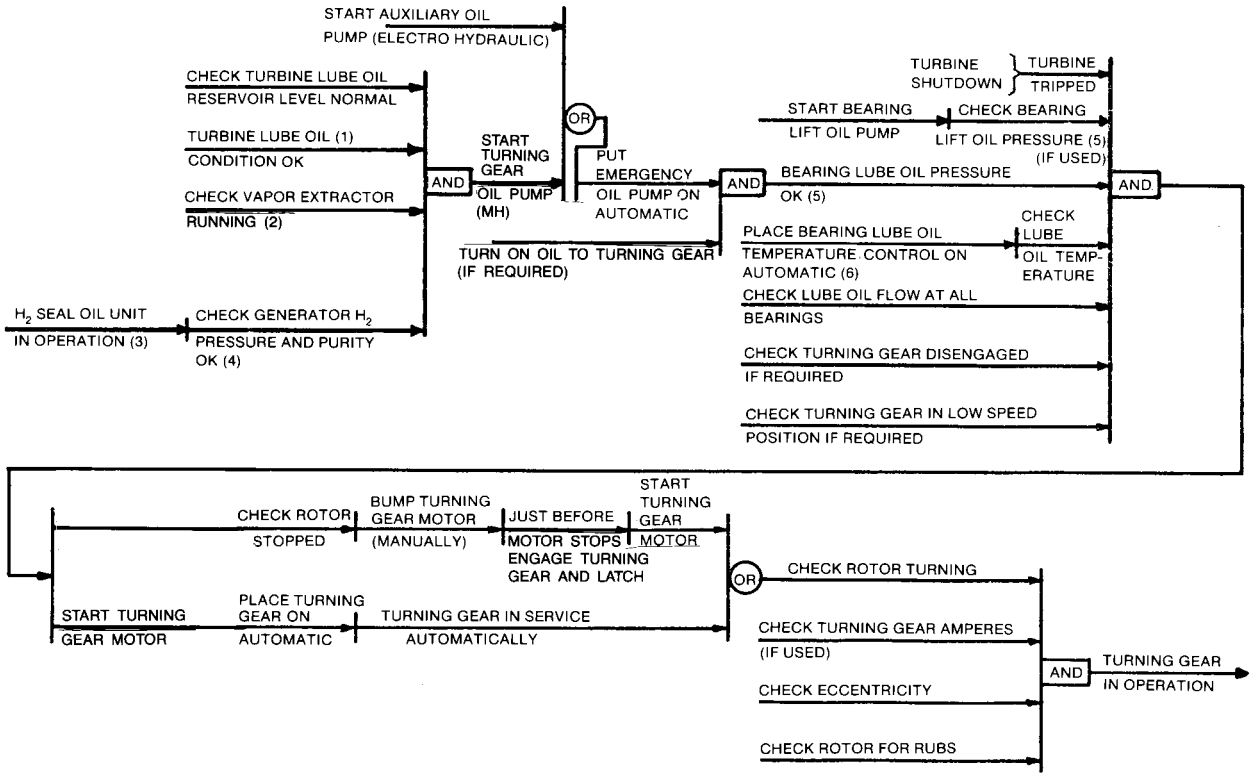

Figure 23—Turning Gear Operation

9.2 Steam Seal System

The function of the steam seal system is to prevent the leakage of air into or steam from the turbine cylinders along the rotor ends where the shaft passes through the shell. In cases where adjacent sections are located in the same shell, they are sealed against internal steam leakage from one section to another. Labyrinth type packings provide a series of throttlings which limit steam leakage along the rotating shaft to a minimum as the steam is throttled from the high-pressure space to the low-pressure space. Regulating valves maintain the sealing steam to the shaft seals at a constant pressure under all operating conditions A gland seal exhauster maintains a vacuum on the shaft seals outboard from the point at which the sealing steam is admitted. The exhauster draws steam from the seals and air from the outboard end. The steam seal system should be put into operation before starting the vacuum system to prevent cooling of the rotor by drawing air into the turbine.

Copyright © 1985 IEEE All Rights Reserved

Copyright The Institute of Electrical and Electronics Engineers, Inc.
Provided by IHS under license with IEEE
No reproduction or networking permitted without license from IHS
Not for Resale

Figure 24 is the logic diagram for the steam seal system.

1) Circulating water in service, see Section 4..
2) There are turbine drains for the stop or throttle valves, reheat stop valves, intercept valves, turbine shell, and extraction lines. They shall all be open.
3) Start-up of the condensate pump(s) is covered in Section 6.. Recirculation flow of condensate is sufficient for cooling of the gland seal exhauster steam.

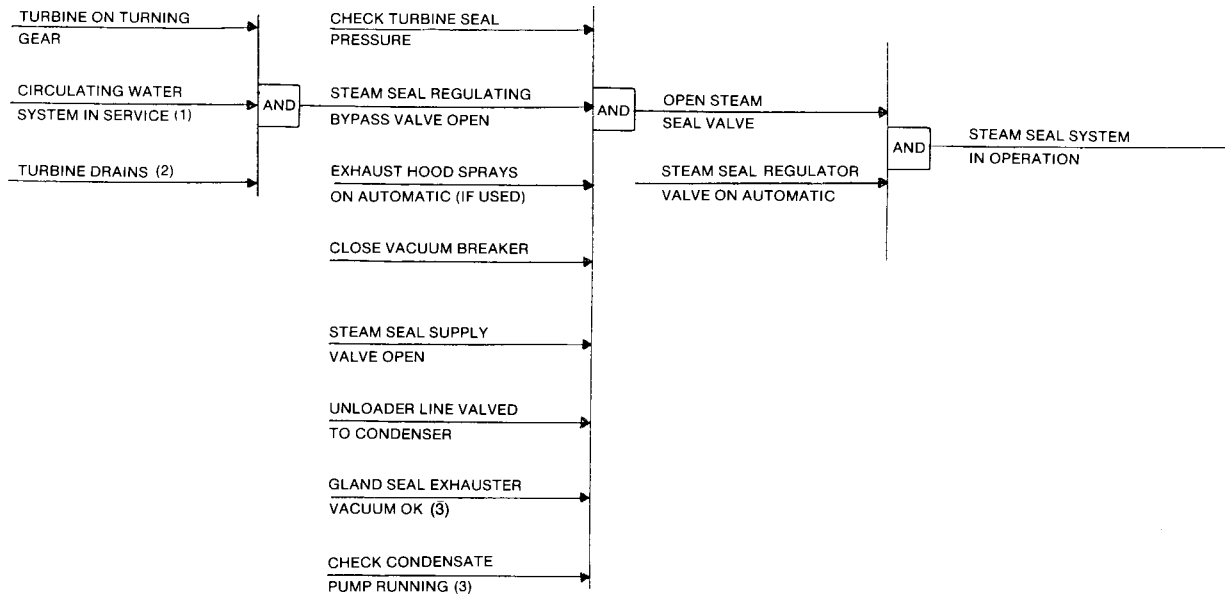

Figure 24—Steam Seal System

9.3 Vacuum Operation

The vacuum system may consist of a vacuum pump or an ejector system. Preliminary steps are required for either system as shown on the logic diagram in Fig 25.

Copyright © 1985 IEEE All Rights Reserved

Copyright The Institute of Electrical and Electronics Engineers, Inc.
Provided by IHS under license with IEEE
No reproduction or networking permitted without license from IHS Not for Resale

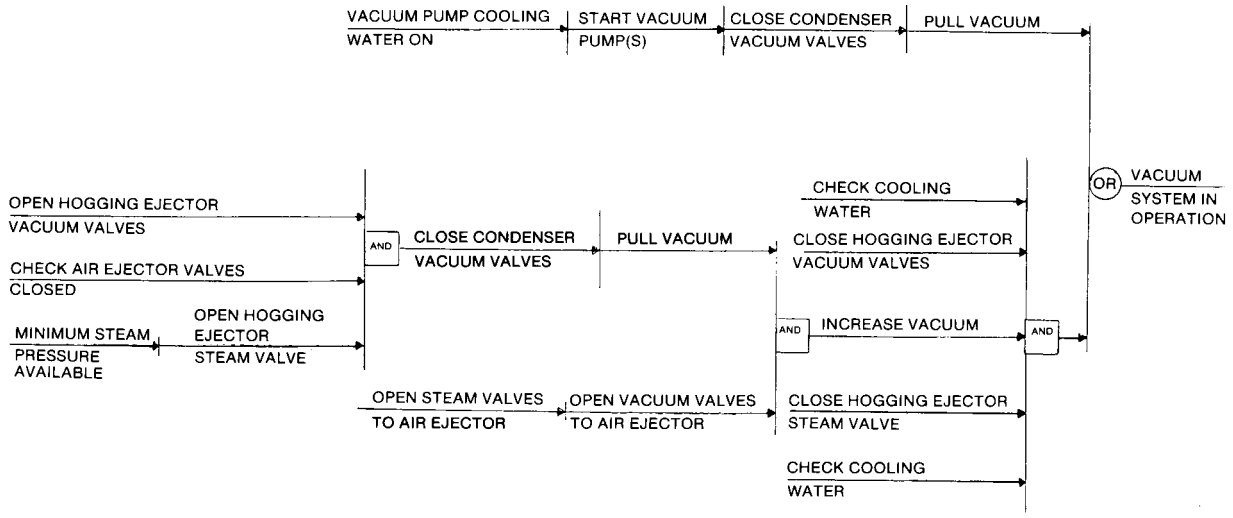

Figure 25—Vacuum System Operation

(1) The diagram for an ejector system is based on use of a hogging ejector to establish the initial vacuum and a water-cooled, two-stage, dual-air ejector to establish and maintain the final vacuum.

9.4 Oil and Hydraulic Fluid Systems

The turbine oil system consists of motor-driven pumps (dc emergency bearing oil pump, turning gear oil pump, auxiliary oil pump or motor suction pumps), and a shaft-driven pump.

Manufacturers' designs vary in the methods of oil system operation. In general, the ac motor-driven pumps are used during start-up and as backup for the shaft-driven pump when the unit is in operation. The dc motor-driven emergency oil pump provides an emergency backup for bearing lubrication when all other pumps are inoperative. The shaft-driven oil pump operates above a given shaft speed during normal operation.

With a mechanical hydraulic control system MH, the oil system supplies the lube oil system (normally 15 psig), the control oil system (nominally 20 psig–45 psig), and the higher pressure hydraulic system (nominally 150 psig–350 psig) for valve operation during start-up and normal operation.

With an electro-hydraulic control system EH, the oil system is independent of the hydraulic fluid system (nominally 1500 psig–2100 psig) except for an interface with the emergency trip system.

With either the MH or the EH control system, the dc emergency bearing oil pump is operated from a battery supply and furnishes sufficient oil pressure to protect the turbine-generator unit bearings in case all other oil pumps fail. Oil shall be supplied to the bearings even after the turbine is on turning gear, or if the turbine comes to rest with a hot rotor. The heat of the turbine shaft would ruin the babbitt in the bearings if there were no oil flow for cooling.

The motor-driven oil pumps should be tested before turbine roll to verify that they will start automatically and provide their respective backup functions. This is generally accomplished by simulating loss of pressure, which should start the pumps in the prescribed sequence. After testing, the pumps are returned to the normal configuration in preparation for turbine roll.

Figure 26 covers the logic diagram for both the mechanical hydraulic oil system MH and the hydraulic fluid system EH.

Copyright © 1985 IEEE All Rights Reserved

Copyright The Institute of Electrical and Electronics Engineers, Inc.
Provided by IHS under license with IEEE
No reproduction or networking permitted without license from IHS
Not for Resale

1) Oil temperature should be at least 50 °F (10.0 °C) before starting pumps and at least 70 °F (21.1 °C) before continued operation, or before placing the unit on turning gear. If the oil temperature exceeds the manufacturer's recommendations for turbine roll, adjust the cooling water flow or place the automated temperature control in service with the appropriate temperature set point.
2) Pump testing should be in accordance with the manufacturer's recommendations.
3) EH fluid temperature should not be less than 50 °F (10 °C) before the system is placed in operation. Prolonged operation with fluid temperature below 70 °F (21.1 °C) is not recommended. After an EH pump has operated sufficiently to raise the fluid temperature to 110 °F (43.3 °C), adjust the cooling water flow to the heat exchangers to maintain a system fluid operating temperature of 110 °F–130 °F (43.3 °C–54.4 °C), or place the temperature control on automatic. Where the EH fluid system includes pump suction valves, positive means should be provided to ensure that the valves are open at all times during operation of the turbine (except when intentionally closed during maintenance periods).
4) Testing of backup EH fluid pumps should be in accordance with the manufacturer's recommendations.

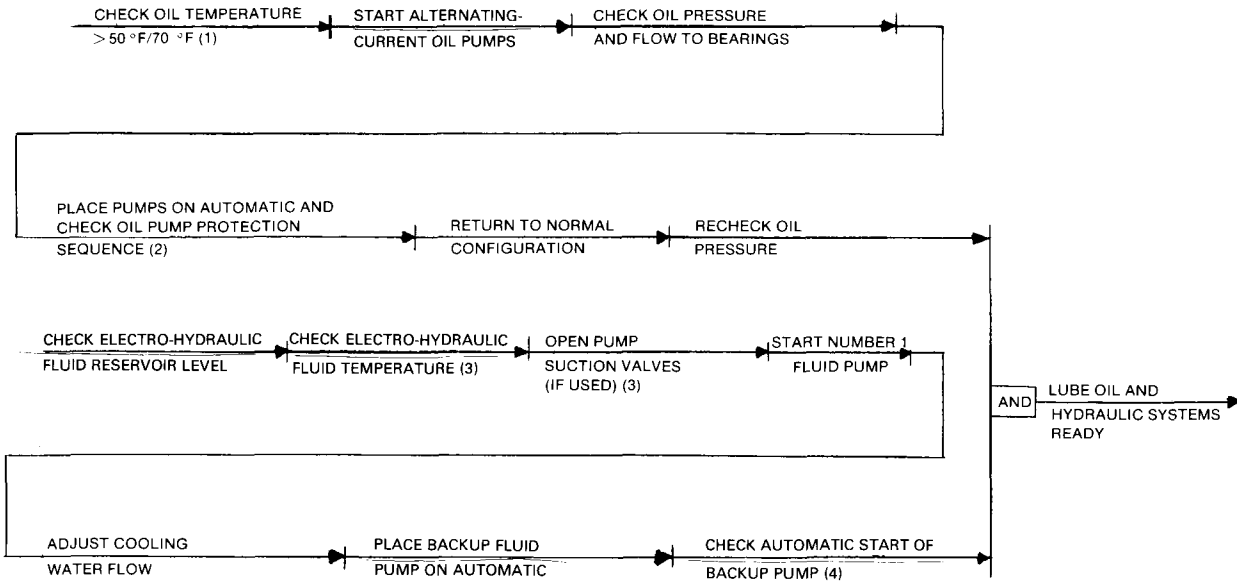

Figure 26—Turbine Oil Systems Operation—Mechanical Hydraulic (MH) and Electro Hydraulic (EH)

9.5 Turbine Rotor Prewarming

Turbine rotor warming is an essential function to raise the rotor temperature sufficiently close to or above the transition temperature. Some turbine manufacturers recommend rotor warming (prewarm) prior to roll-off after the vacuum system is in operation. Other manufacturers recommend that rotor warming (heatsoak) be performed during turbine acceleration and involves a "part speed hold" usually between 2250 and 3000 r/min (for 60 Hz units). In either case, the manufacturer's specific recommendations should be followed.

9.6 Valve Trip Testing

In preparation for roll, the main turbine valves should be tested to verify that the testable functions of the trip system are working properly. This involves resetting the turbine trip system, verifying that all valves involved are in the proper position, manually tripping the turbine from the control-room panel and observing that all valves return to the tripped status. The manufacturer's specific recommendations should be followed.

Copyright © 1985 IEEE All Rights Reserved

Copyright The Institute of Electrical and Electronics Engineers, Inc.
Provided by IHS under license with IEEE
No reproduction or networking permitted without license from IHS
Not for Resale

9.7 Turbine Preroll

The turbine is now ready for preroll checks. Figure 27 is the logic diagram for those operations.

1) Energize the supervisory instruments. Check that they are recording normally.
2) Energize the EH (electro-hydraulic) electronic governor at least 2 h before admitting steam into the turbine.
3) If an electrical-trip system (as opposed to a mechanical hydraulic-trip system) is provided, the electrical portion shall be energized prior to turbine roll-off.
4) The main steam valves furnished with the turbine have different names depending on the manufacturer. Main steam valves are known as either "stop valves" or "throttle valves"; "control valves" are also "governor valves"; and "throttle valve pilot valves" are also "main stop valve bypass valves."
   Reheat stop and intercept valves are names used by all manufacturers.
   Figures 28, 29, 30, and 31 refers to the main steam valves as "stop valves" and "control valves."
5) The details of resetting the turbine trip system and the status of the various valves when reset vary with manufacturers.

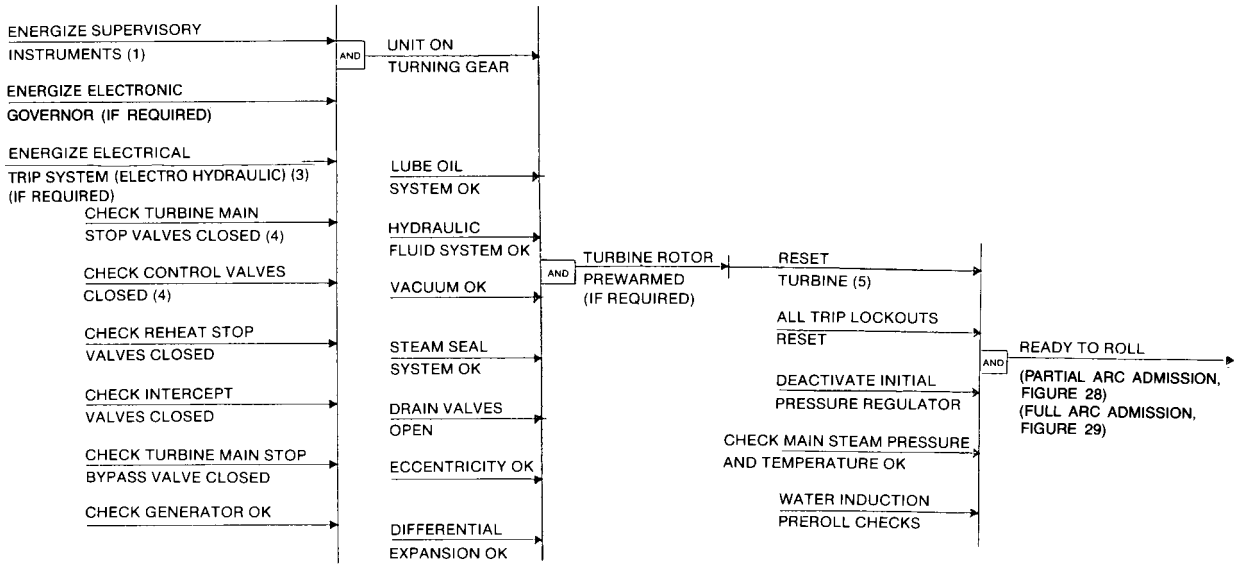

Figure 27—Turbine-Generator Preroll Checks

9.8 Turbine Roll

Turbine-generator roll, and acceleration to rated speed, synchronizing, and loading can be accomplished with flow controlled by either stop valve bypass valves or the control valves. If flow is controlled by the stop valve bypass valve, the control valves are fully open and the first stage admission is in full arc. If the flow is controlled by the control valves, the first stage admission can be either in full arc or partial arc.

Start-up with first stage admission in full arc provides more uniform heating (and expansion) of the turbine shell rotor and related turbine parts, and provides reduced first stage loading. As a result, it is the most common practice. However, for some units, partial arc admission is used during turbine roll.

With partial arc admission, the control valves operate sequentially; that is, for increasing turbine steam flow, one or a group of control valves open to near wide open and then a second single or group of control valves begin opening, etc.

Copyright © 1985 IEEE All Rights Reserved

Copyright The Institute of Electrical and Electronics Engineers, Inc.
Provided by IHS under license with IEEE
No reproduction or networking permitted without license from IHS
Not for Resale

Since partial arc admission results in more efficient operation (lower heat rate), units started in the full arc mode will generally be transferred to the partial arc mode at some point in the start-up procedure. This can be done either by transferring flow control from the stop valve bypass valve to the control valves or by changing the admission mode of the control valves from full arc to partial arc.

Some manufacturers are providing full throttling controlled HP turbines which use full-arc admission (through control valves) over the full range of the steam flow.

When starting the unit under control valve control, the main stop valves and control valves are initially fully closed. In some cases, the control-valve chest is heated by using the stop valve bypass valves to admit steam to the chest. When the chest is adequately heated, the main stop valves are fully opened and the control valves are positioned to control speed and loading.

There are some variations between manufacturers' instructions for start-up. One method of start-up uses the main stop valve bypass valve(s) up to 95% rated speed. Then, after the transfer to partial arc admission, the unit is taken to rated speed, and synchronized and loaded using the control valves. Other manufacturers use the main stop valve bypass valve(s) up to rated speed for synchronizing and for loading to a percent of rated load. At a load between 20% and 40%, control is transferred to the control valves for operation in the partial arc admission mode.

Figures 28, 29, 30, and 31 are the logic diagrams for turbine-generator roll, acceleration, synchronizing and loading in the full arc, and partial arc admission modes.

1) On cross-compound units with separate exciters, shift the turning gear to high speed (if required), apply the required excitation, synchronize the two generators, and check that both shafts continue to turn in the same direction (one of the turning gears may disengage).
2) On cross-compound turbine-generators with shaft-driven exciters, the low-pressure turbine start-up admission valve is positioned at the same time as the main stop valve or main stop bypass valve in order to roll the low-pressure turbine at a speed comparable (electrically) to that of the high-pressure turbine. At approximately one-half speed, excitation is applied and the shafts are brought into step.
3) On EH control systems equipped with "automatic start-up," the entire speed control from turning gear to synchronous speed can be achieved automatically with no operator action other than initiating the function and supervising the operation.
4) With some EH control systems, the turbine is rolled by selecting an acceleration rate and the desired speed level. Other EH control systems require a separate initiation of roll after the desired acceleration rate and speed level are selected. After initial roll, turbine acceleration is controlled at the selected rate up to the selected speed level. Acceleration is continued by successively selecting higher target speeds with appropriate acceleration rates until synchronous speed is achieved. On some units, a transfer from full arc admission to partial arc admission is preferred prior to synchronous speed at about 95% of rated speed. On closing the main generator breaker, a small amount of load (nominally 2%–5% rated) should be applied to prevent a motoring condition. Loading with an EH control system is performed by selecting "target" loads and desired loading rates and, if necessary, initiating loading. To increase the load with an EH control system equipped with an "automatic loading" feature, the operator selects a desired load value and initiates the automatic loading mode. The automatic loading feature monitors appropriate steam and metal temperatures, supervisory instruments, etc, to determine the optimum loading rate.
5) To roll a turbine in the partial arc admission mode with a MH control system, the control valves are opened by raising the load (valve position) limit. For the full arc admission mode with a MH control system, the turbine is rolled by opening the main stop valve bypass valve(s) with the control valves wide open. The acceleration rate is controlled by adjusting the control valve position with the load limit for partial arc and the stop valve bypass valve position for full arc admission. Above 95% of rated speed in the partial arc mode with the MH control system, speed is controlled with the speed/load charger.
6) The practice of checking for rubs after initial roll of the turbine is no longer common practice but is still in use. Most manufacturers presently recommend accelerating without delay to at least 500 to 800 r/min so that the vibration transducers (turbine supervisory instrumentation) are providing meaningful readings.

Copyright © 1985 IEEE All Rights Reserved

Copyright The Institute of Electrical and Electronics Engineers, Inc.
Provided by IHS under license with IEEE
No reproduction or networking permitted without license from IHS Not for Resale

7) Manufacturer's recommended procedures for acceleration and loading and requirements for heat soak holds shall be followed. The turbine-generator unit may be loaded by a plant-coordinated system, boiler-control system or remote dispatcher depending on the features and interfaces of the turbine-control system and operator selection.
8) Low-system frequency is a possible cause of turbine blade vibration damage and some units shall be tripped after one or more minutes of operation at reduced frequency.

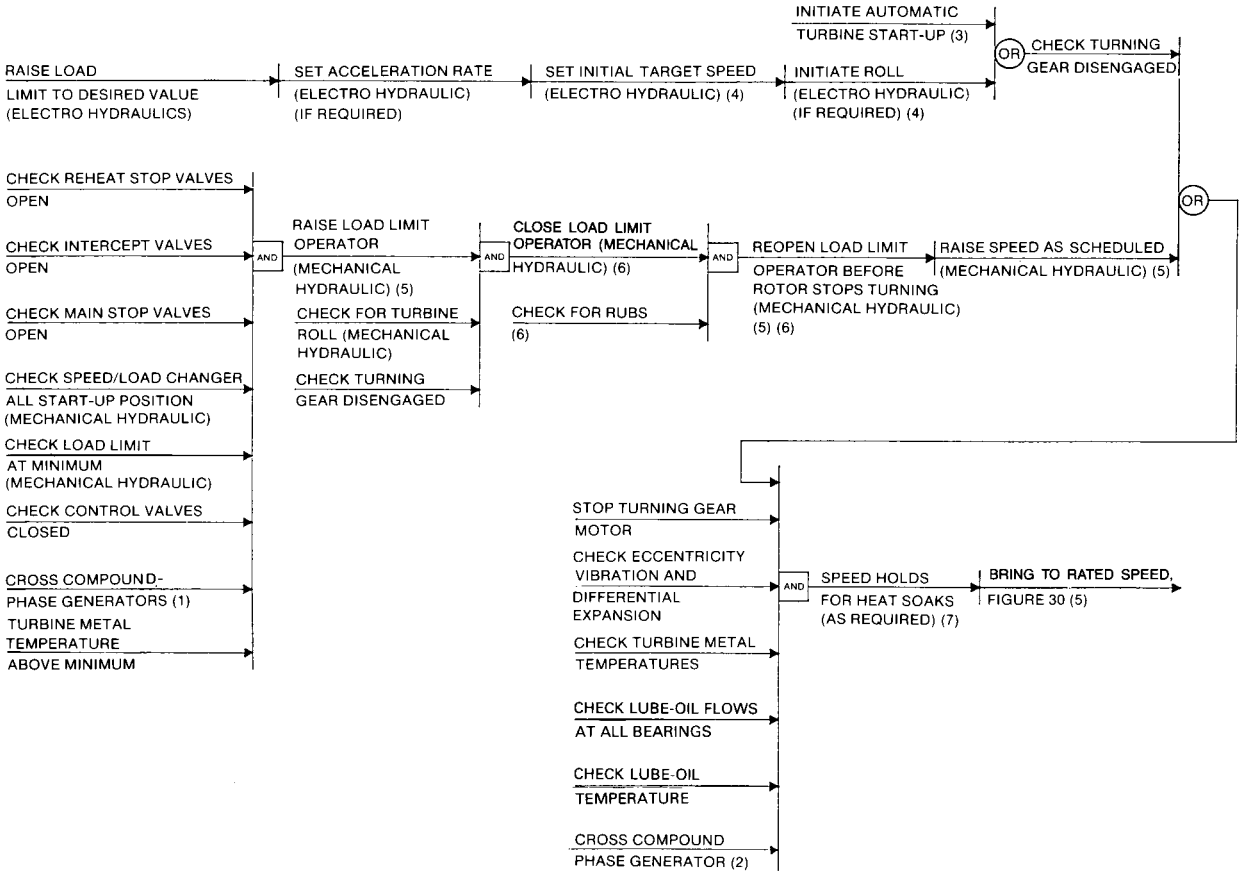

Figure 28—Roll in Partial Arc with Control Valve Control

Copyright © 1985 IEEE All Rights Reserved

Copyright The Institute of Electrical and Electronics Engineers, Inc.
Provided by IHS under license with IEEE
No reproduction or networking permitted without license from IHS
Not for Resale

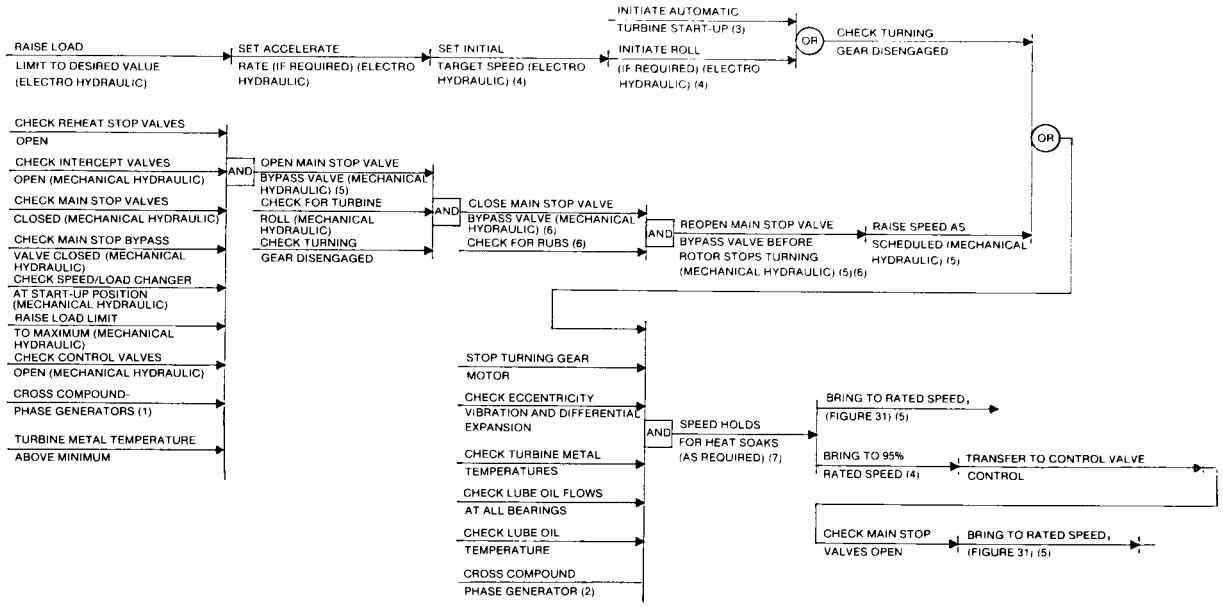

Figure 29—Roll in Full Arc Admission with Stop Valve Bypass Control

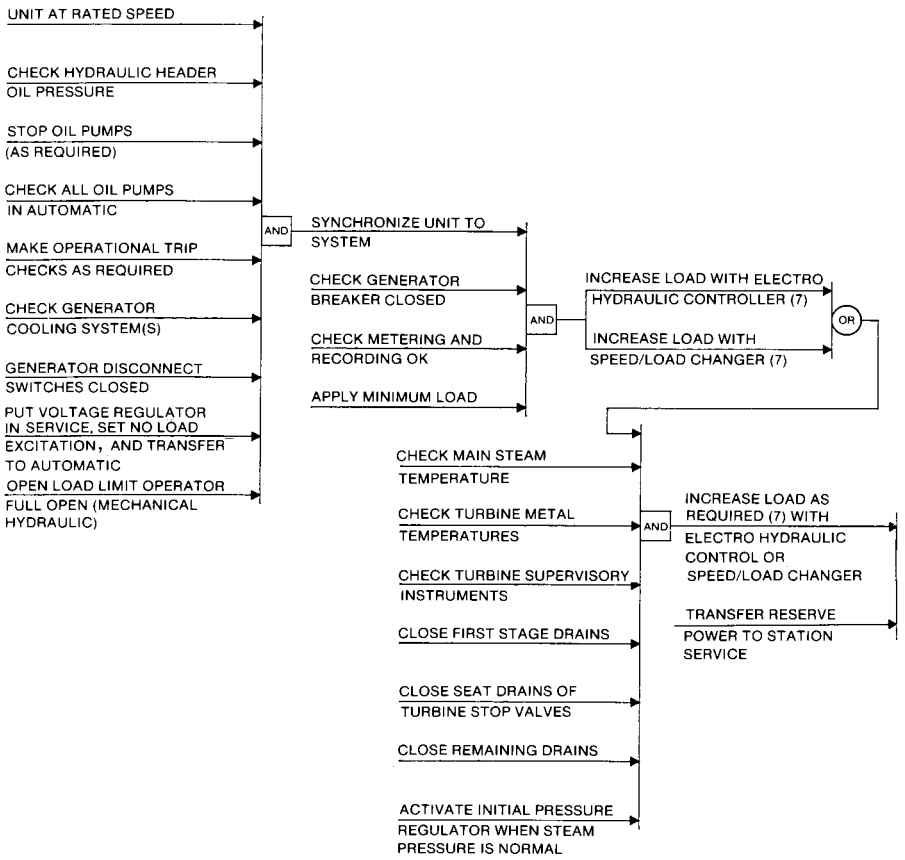

Figure 30—Partial Arc Admission Presynchronize to Loading Under Control Valve Control

Copyright © 1985 IEEE All Rights Reserved

Copyright The Institute of Electrical and Electronics Engineers, Inc.
Provided by IHS under license with IEEE
No reproduction or networking permitted without license from IHS
Not for Resale

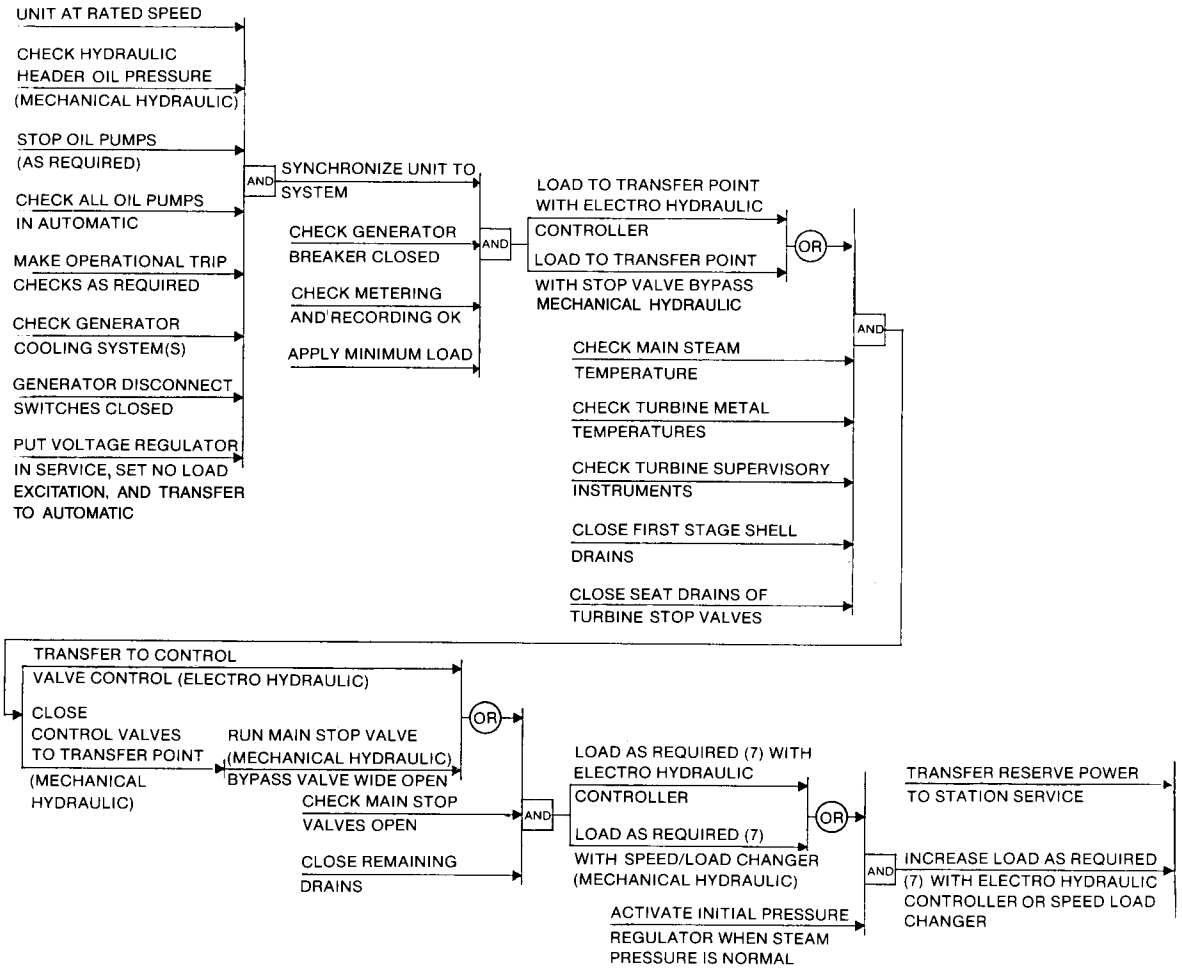

Figure 31—Full Arc Admission Presynchronize to Loading Under Stop Valve Bypass Valve Control and Transfer to Control Valve Control

10. Overall Protection

The BTG unit protection system concept has become a standard as the unit sizes have increased. The object of protection is still the prevention or minimizing of damage and improvement of reliability.

Generator failure, main or auxiliary transformer insulation failure, or excessive generator stator or rotor heating requires automatic unit tripping whereby turbine stop valves are closed, generator breakers are opened, and boiler fuel flow is stopped.

Turbine trip results in the closing of the main and reheat stop valves. The main generator should not be tripped until the turbine-generator unit reaches a “no-load” or “negative-load” condition. Tripping by this procedure should provide the best assurance that all sources of steam to the turbine are reduced below the amount required to produce overspeed.

The following recommended detailed protection of major components of the BTG are presented in the text and logic diagrams.

Copyright © 1985 IEEE All Rights Reserved

--`,,`-`-`,,`,,`,`,,`---
Copyright The Institute of Electrical and Electronics Engineers, Inc.
Provided by IHS under license with IEEE
No reproduction or networking permitted without license from IHS
Not for Resale

10.1 Boiler Protection

Minimum adequate circulation of boiler water flow is a prime consideration in protecting the water side of the boiler from abnormal heating damage. For natural circulation boilers, the thermal head provides adequate circulation. For drum boilers, a fuel trip on low drum level is required by ASME Boiler Code to prevent loss of natural circulation and to protect the drum against thermal shock. For controlled circulation boilers, pumps are utilized to ensure circulation. Adequate circulation is determined by differential pressure measurements, and tripping of the boiler fuel is required when adequate circulation is not verified. Some designs recommend tripping fuel and feedwater on drum boilers for high drum level to prevent water carry-over. For forced circulation once-through boilers, the boiler feed pumps ensure adequate circulation and loss of feed pumps or less than minimum flow require tripping of boiler fuel. For all types of boilers, load run-backs to the remaining feed pump capability should be considered on multiple feed pump installations.

The furnace may be designed to operate at negative or positive pressure. A furnace over-pressure sensor is usually required to trip the fuel supply of pressurized units when pressure approaches design limits set by the manufacturer (consult manufacturers for exceptions). A time delay is often employed to minimize false trips from transient surges.

With the increased size of ID fans furnished for large-sized boilers, the protection from boiler implosions becomes critical. Excessive negative pressure (draft) can produce implosions of the boiler walls, precipitator, or the ducts connected to them. The most likely time for a furnace implosion is at the time of a boiler-fuel trip. This causes a sudden drop in temperature, which in turn causes a sudden negative pressure within the furnace.

Protection from boiler implosions involves checking and regulating pressure throughout the boiler and duct systems within a range of permissible limits. The following considerations are important:

1) Sensing of abnormal negative pressure (high draft) by redundant furnace pressure measurements. Often two out of three in agreement are required to implement action.
2) The application of emergency override control acting below the induced draft-fan selector setpoint to close the ID fan dampers temporarily until the abnormal pressure transient is resolved.
3) Override of the controls should be automatic and not require manual control by the operator.

Procedures used to protect against furnace implosions shall avoid increasing the possibility of furnace explosions. See ANSI/NFPA 85G-1982 [5].

Low pressure in the fuel supply is also a trip condition for oil- or gas-fired boilers.

Post-trip purge is recommended by NFPA to remove unburned fuel from the furnace. Prestart purge shall be used in the start-up procedure. Air flow for purge and light-off shall be greater than 25% of full-load flow. Purge cycles of 5 min duration are considered minimum. (See Section 8.)

Many users trip the turbine when the boiler fuel is tripped to prevent possible turbine damage due to water carry-over from the boiler.

The turbine initial pressure regulator for the turbine valves can minimize this risk if the turbine is not tripped; however, most turbine suppliers recommend against this practice because of rapid steam temperature change.

Furnace air flow is to remain constant after the fuel trip (no intentional fan trip).

Figures 32 and 33 are the logic diagrams for boiler trips for a drum boiler and a once-through boiler.

Copyright © 1985 IEEE All Rights Reserved

Copyright The Institute of Electrical and Electronics Engineers, Inc.
Provided by IHS under license with IEEE
No reproduction or networking permitted without license from IHS Not for Resale

1) Loss of all ID or FD fans requires a fuel trip. Tripping of fans and associated dampers is coordinated to achieve
   a) Balanced air flow
   b) Minimum disturbances to air flow
   c) Maintenance of air for purging, so air-to-fuel mixture is air-rich.
2) FD fans are interlocked to be tripped by ID fans when used.
3) Loss of all flame in the furnace or a partial loss of flame where hazardous conditions could develop requires a fuel trip. See ANSI/NFPA 85B-1978 [2], ANSI/NFPA 85E-1980 [4], and NFPA 85F-1982 [7] for flame monitoring, tripping requirements, recommendations for use of flame detectors. A combustible analyzer may be used to alarm a possible hazardous condition. Combustion analyzers are applicable primarily on oil- and gas-firing and a hazard can exist without measured combustibles being present.
4) Controlled circulation boiler.
5) Protection for the boiler is provided by stopping the fuel supply when the turbine main or the reheat stop valves, or both, are tripped closed.
6) Boiler drum level indicators can bottom-out in a manner that indicates a small quantity of water remaining in the drum. A large imbalance between feedwater and steam flow observed from other indications, that is, 100% steam flow and 50% feedwater flow, should show this to be true and the boiler should be tripped.
7) When spray attemperators are used for regulating superheat and reheat temperatures, the reheat spray control and block valves should be automatically closed when the fuel or the turbine is tripped to prevent reheater spray water from entering the turbine through the cold reheat line. Operator initiation is required to reset and re-open the reheat attemperator block valves after the turbine trip and the main fuel trip have been reset, and the attemperator control valve is closed. The reheater attemperator block and control valves should not be released for automatic control below loads where reheat spray is required.

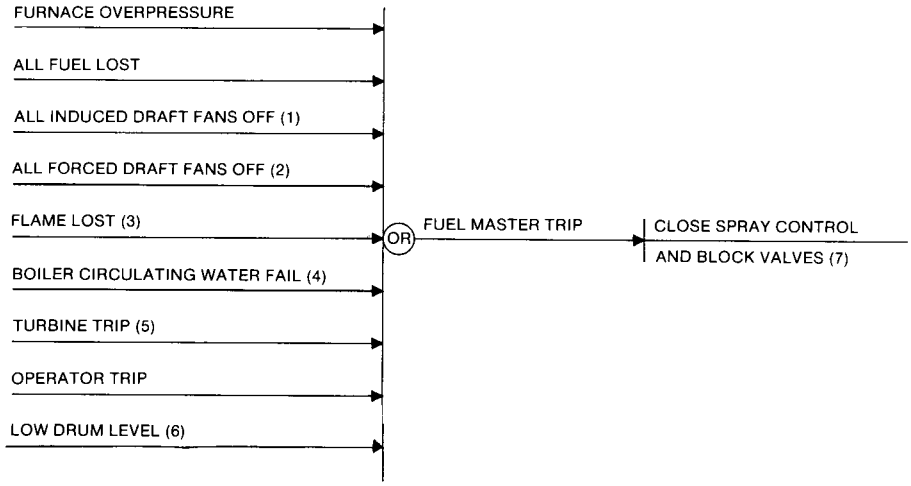

Figure 32—Boiler Trips — Drum Boiler

Since superheater spray attemperators are also a possible source of difficulty, the boiler manufacturer should be consulted regarding automatic closure of the superheater spray attemperator control and block valves.

Figure 33 is the logic diagram for a once-through boiler. The logic diagram for a once-through boiler is generic and the manufacturer's design and operating recommendations shall be used to establish the protective functions for specific plants.

Copyright © 1985 IEEE All Rights Reserved

Copyright The Institute of Electrical and Electronics Engineers, Inc.
Provided by IHS under license with IEEE
No reproduction or networking permitted without license from IHS
Not for Resale

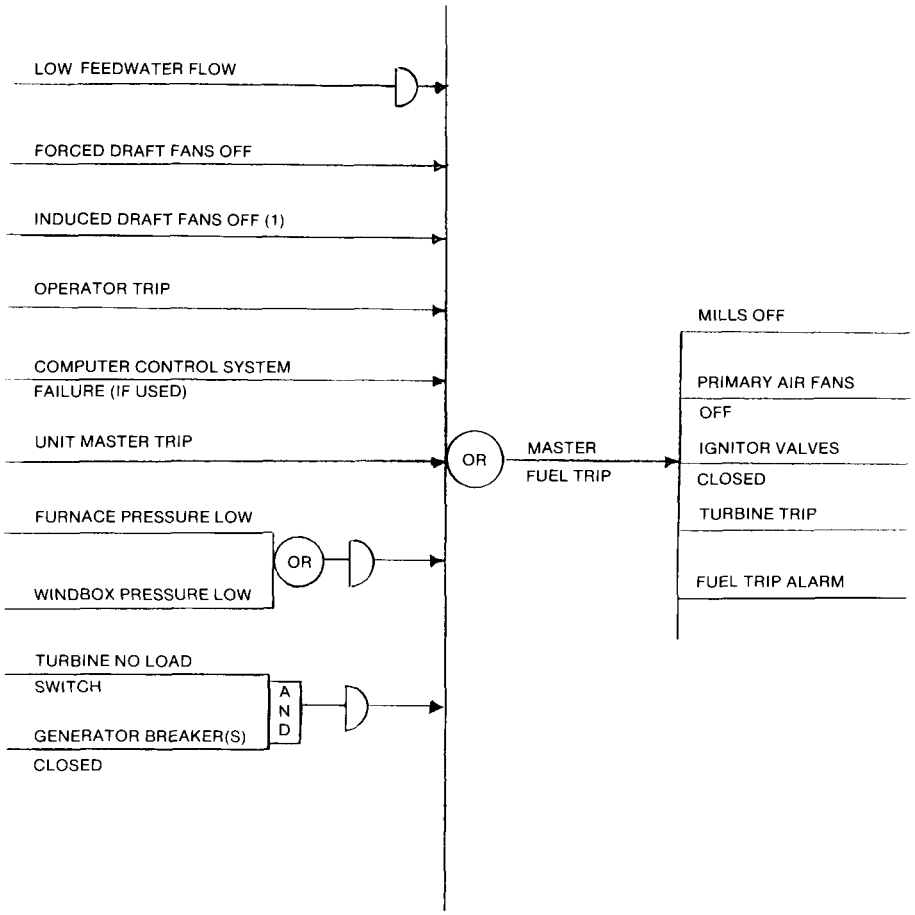

Figure 33—Boiler Tips — Once-Through Boiler

10.2 Turbine Protection

When the turbine-generator is connected to the grid system and the power input to the turbine is insufficient to drive the generator, motoring will occur. Under certain conditions, motoring can be harmful to the turbine blades if it is sustained for extended periods. This is due to the loss of the cooling effect of steam flow which can result in over-heating the last stage blading. Variations of anti-motoring detection include limit switches on the steam valves, exhaust-hood excess-temperature monitoring, auto-stop tripping, reverse power relays with time delay, and differential pressure across the high-pressure cylinder. Insufficient steam flow at low loads can also cause overheating.

Figure 34 is the logic diagram for the turbine trips.

1) Loss of vacuum in the condenser is detected and initiates a turbine trip to prevent over-heating damage to the low-pressure turbine section
2) Overspeed detection is always included as basic turbine protection to prevent damage from high centrifugal forces
3) Low bearing oil-pressure detection initiates a turbine trip
4) High vibration of the journal bearings initiates a turbine trip
5) An excessive axial motion of the rotor spindle at the thrust bearing initiates a turbine trip to prevent or reduce mechanical damage

Copyright © 1985 IEEE All Rights Reserved

Copyright The Institute of Electrical and Electronics Engineers, Inc.
Provided by IHS under license with IEEE
No reproduction or networking permitted without license from IHS Not for Resale

6) On some units with an EH control system excessively low EH fluid pressure initiates a turbine trip.
7) If the turbine is not tripped after the boiler fuel supply is tripped, a turbine main-pressure limiter should be provided to reduce the turbine load commensurate with dropping steam pressure.[4]

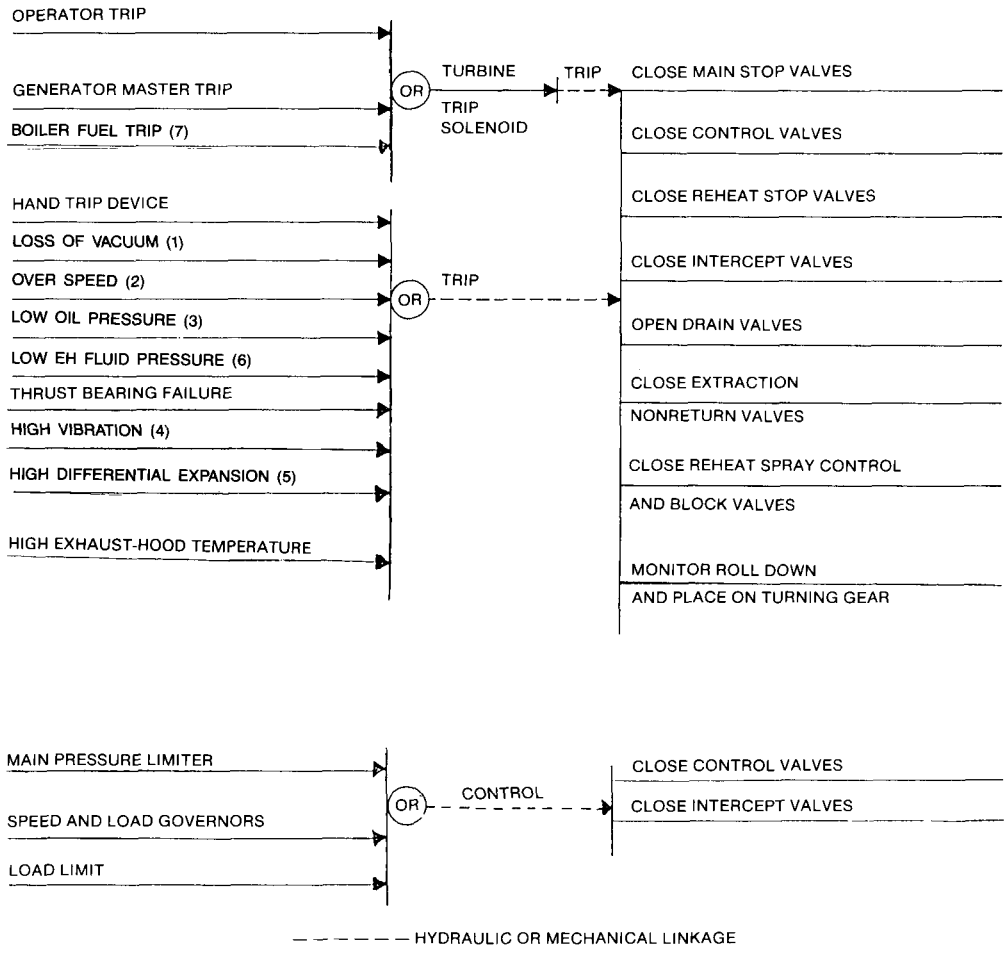

Figure 34—Turbine Trips

On units which have an electrical-trip system (as opposed to a mechanical-hydraulic-trip system) the following conditions which are detected by electro-mechanical devices initiate a turbine trip by way of redundant trip solenoids: thrust bearing failure, low condenser vacuum, low bearing oil pressure, low EH fluid pressure, and overspeed. These units also have mechanical devices for overspeed trip and local manual tripping.

A manual trip of the turbine is recommended as the operator's unit trip. Tripping the turbine first will allow the generator to act as a brake to minimize overspeeding. Detection of such parameters as abnormal vibration, differential expansion, and thrust-bearing temperatures are most often for pretrip alarms only. However, at excessive values tripping of the turbine by the operator is recommended.[5]

[4]A second, less desirable alternative is to quickly reduce the load to a low value (with automatic control) and trip the unit, if the boiler tires cannot be re-established at once.
[5] ASME and manufacturers' recommendations on turbine water induction prevention should be reviewed for compliance and implementation.

Copyright © 1985 IEEE All Rights Reserved

Copyright The Institute of Electrical and Electronics Engineers, Inc.
Provided by IHS under license with IEEE
No reproduction or networking permitted without license from IHS
Not for Resale

10.3 Generator Protection

IEEE Power Systems Relaying Committee documents and manufacturers' recommendations should be used as guides for the protection of the generator, main and auxiliary transformers, auxiliaries' electric system, and motors.

Figure 35 is the logic diagram for generator trips.

1) Differential current relays are used to detect phase-to-phase faults in the generator, transformers, and connecting circuits. There are usually separate differential zones for the generator, the step-up transformer, the unit auxiliary transformer, and an overall unit differential relay. Operation of any of these relays should result in tripping the unit breaker(s) and removal of the generator excitation.
2) Ground-fault current is usually limited to low values (in the order of 15 A or less) by impedance in the generator neutral. Ground faults are detected by voltage, or current sensing relays in the secondary circuits of the grounding transformer, or current transformers. Operation of these relays should trip the unit breakers and remove the excitation.
3) Excessive heating of the generator rotor during unbalanced faults is prevented by negative sequence current relays connected to current transformers in the generator leads. These relays should trip the unit breaker(s) and remove the excitation.
4) Loss of excitation during operation of the unit is detected by a relay which monitors the apparent impedance at the generator terminals. This relay is supplied by potential transformers connected to the generator terminals and current transformers in the generator leads. Where a two-zone system is used for operation of "loss of field" relays, the first zone is set for total loss of field conditions and trip, with no intentional time delay. The second zone is set for partial loss of field and trips after predetermined time delay.
5) Excessive volts/hertz for the generator or connected transformer can be detected by volts/hertz relays supplied by potential transformers connected to the generator teminals (leads). Excessive volts/hertz can be caused by having the voltage regulator in service at speeds lower than normal, that is, during startup or shutdown or during sustained under frequency operation following a disturbance. It may also be the result of a load loss or rejections from even a moderate load level on the machine. With the voltage regulator in service, the voltage following load loss will usually be reduced to the preset value within 1 s or 2 s, but if the unit is on manual control (fixed excitation), the operator will usually not be able to respond in time to avoid damaging levels of volts/hertz. Some voltage regulators incorporate volts/hertz limiters, but these are only effective with the regulator in service. Excessive volts/hertz should immediately trip the unit breaker(s) and remove the excitation.

   Monitoring of the generator rotor (field) circuit for detection of grounds may be done continuously or intermittently depending on the type of excitation system, or user preference, or both. On generators where the field circuit is accessible, a relay may be permanently connected to the circuits which connect to the collector brush assembly.

   On brushless systems, the monitoring is accomplished by periodically connecting a ground detecting circuit to slip rings provided on the rotor for that purpose. The ground check can be done automatically by a sequencing timer and control, or at will by the operator. Detection of a field ground should be an alarm with sequential trip of the unit after the load has been run-back.

   Excessive heating of the generator field (during extended periods of field forcing can be prevented by overexcitation limiting and protection equipment usually supplied as part of the excitation control (voltage regulating) equipment. This equipment permits corrective action by the regulator within the thermal capability of the field but then limits the excitation after a time delay. Back-up protection may be used to remove the regulator from service and trip the unit breakers(s) in extreme cases.

   Minimum excitation limiters included in the excitation control equipment are basically intended to prevent reducing the generator excitation to a level which might permit the generator to pull out of synchronism with the power system. These devices are not intended to provide thermal protection for the generator although some users set them to prevent operation outside the limits of the underexcited capability of the generator.
6) Back-up protection for both the generator or portions of the transmission system, or both, may take a variety of forms and may be included in the generating-unit relaying or the transmission-switchyard relaying. Some of the back-up protection is provided to detect failure of a breaker pole(s) to open or flashing across an open breaker (or pole).

Copyright © 1985 IEEE All Rights Reserved

Copyright The Institute of Electrical and Electronics Engineers, Inc.
Provided by IHS under license with IEEE
No reproduction or networking permitted without license from IHS Not for Resale

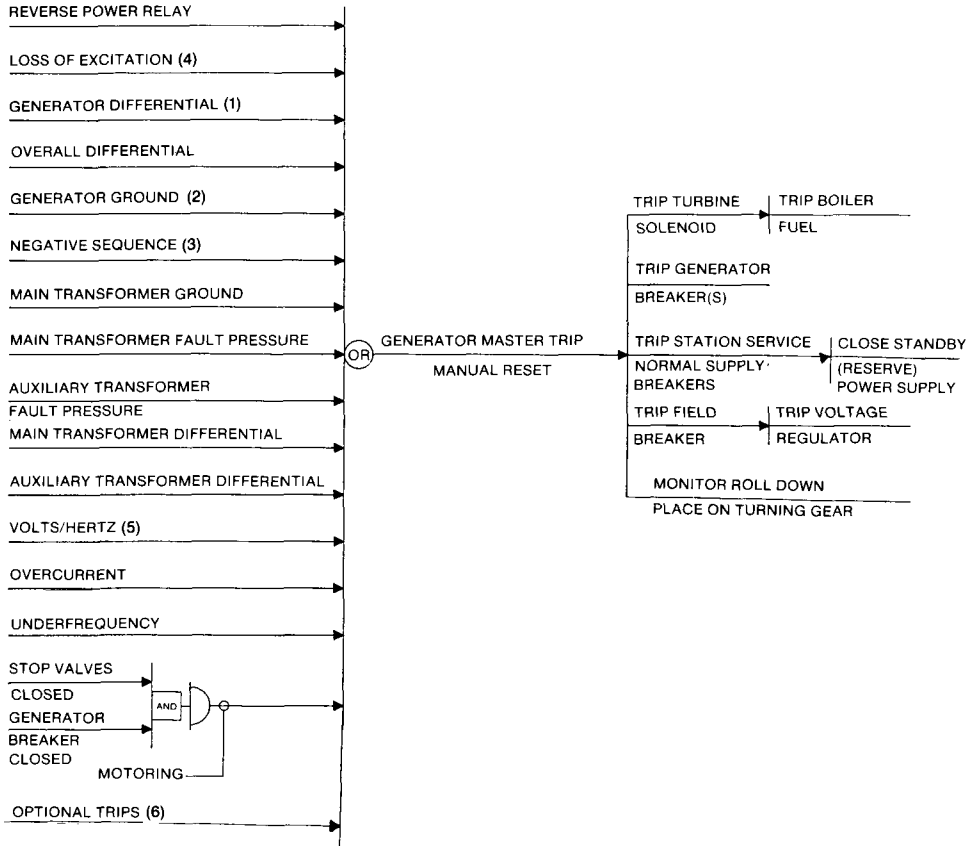

Figure 35—Generator Trips

10.4 Main and Auxiliary Transformers

Several aspects of transformer protection have been covered in 10.3. Additional protection may include ground-differential and ground-overcurrent relays and sudden pressure or fault-pressure relays which detect abnormal changes in the internal pressure of the transformer. Tripping of the unit and removal of the generator excitation should be initiated by these devices.

Top-oil temperature and hot-spot winding temperature should also be monitored and set to an alarm. A second alarm contact on these devices can be used for a trip function if required.

Some users employ a single transformer connected to the system for auxiliary supplies, rather than the more common transformer scheme shown in Fig 36.

Copyright © 1985 IEEE All Rights Reserved

Copyright The Institute of Electrical and Electronics Engineers, Inc.
Provided by IHS under license with IEEE
No reproduction or networking permitted without license from IHS
Not for Resale

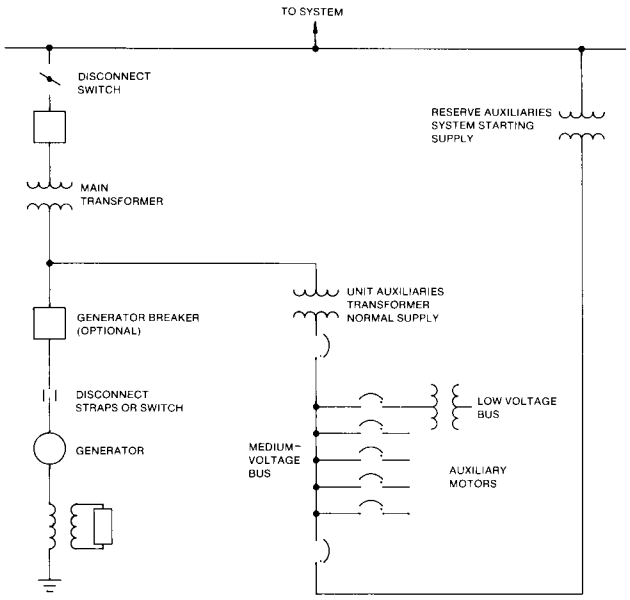

Figure 36—Unit-Connected Turbine System

Disconnect switches should be utilized to minimize the possibility of energizing the generator from the system while the unit is on turning gear, at standstill, or at other reduced operating speed. In addition, the protective-relaying system should provide means of detecting such a condition and isolating the unit if it should occur. Care should be taken to ensure that the trip circuits of these detecting relays are not disabled during the shutdown period of the unit. Inadvertent connection to the system could be the result of operator error, breaker flashover, or pole malfunction, or where low air-pressure detection in the breaker chamber automatically closes the breaker.

10.5 Auxiliary System

The grounded neutral systems have gained acceptance for most power auxiliaries (low-resistance ground for medium voltage and solid ground for low voltage). Coordination of tripping is improved with adjustable magnetic molded case breakers in motor-control centers. Fused disconnect switches are sometimes used.

Overload protection is also required. Ground sensors and differential overcurrent relays are widely used on larger motor drives in addition to phase overcurrent relays.

Motor bearing temperatures are monitored by thermocouples or sensors embedded in the bearing or oil reservoir. Winding temperatures are monitored by embedded sensors. These usually alarm only.

Automatic throwover on loss of power in auxiliary units is commonly used. Transfer of the medium-voltage bus can be initiated by the unit protection system.

10.6 Emergency Power

All modern units require emergency power for operation of such loads as emergency bearing oil-pumps and seal oil-pumps during emergency shutdown. One or more station batteries are the recognized reliable supply for these loads and should be adequate to supply dc pump operation for the duration of turbine-generator coastdown in the event of a turbine trip with loss of ac power. System designers should take particular care in selecting starting resistors and motor contactors, and in the coordination of breaker settings, so that time delay will be minimized. Manufacturers'

Copyright © 1985 IEEE All Rights Reserved

Copyright The Institute of Electrical and Electronics Engineers, Inc.
Provided by IHS under license with IEEE
No reproduction or networking permitted without license from IHS Not for Resale

recommendations will in all cases be adopted so that exposure of the unit to possible loss of oil is minimized. Oil flow is also required to remove stored heat from the bearings even after the machine has coasted to rest.

Standby power varies with user' preference. Diesel generators are commonly used for long-term standby ac power for such loads as auxiliary oil-pumps, turning gear, emergency lighting, battery chargers, and communications. Some provide emergency power to fire-protection systems, elevators, and air preheaters.

Uninterruptible power supply (UPS) systems with a dc back-up and an inverter are used for such essential loads as electronic controls, combustion controls, and computers. These systems are listed in Table 6.

11. Summary of Unit Overall Protection

Tables 1, 2, 3, 4, 5, and 6 summarize and supplement the material in this guide. They are intended only as a guide and should serve as a foundation for the control and protection decisions to be made. Industry practices vary and as such, individual opinions may be encountered which will conflict with the tabulation in Tables 1, 2, 3, 4, 5, and 6.

Copyright © 1985 IEEE All Rights Reserved

Copyright The Institute of Electrical and Electronics Engineers, Inc.
Provided by IHS under license with IEEE
No reproduction or networking permitted without license from IHS Not for Resale

Copyright The Institute of Electrical and Electronics Engineers, Inc.
Provided by IHS under license with IEEE
No reproduction or networking permitted without license from IHS
Not for Resale

Table 1—Summary of Unit Overall Protection for Boiler

	Hazard or Alarm Condition	Type of Boiler	Sensor	Action
(1)	Low water supply	All drum type	Drum low level switch	Alarm
		Controlled circulation	Drum low low level switch	Trip
		Once-through	Different pressure switch	Trip fuel supply
			Low flow switch	Trip fuel supply
			High superheat temperature switch	
(2)	High steam temperature	All	Thermocouple in superheat and reheat lines	Alarm
(3)	High steam pressure	All	Safety valves	Release pressure
(4)	Low steam pressure	All	Pressure sensor	Alarm
(5)	Loss of fans			
	(a) Two forced draft fans	Pressurized furnace		
	*(i) One off		Fan breaker auxiliary switch	Run-back load
	(ii) Two off		Fan breaker auxiliary switch	Trip fuel supply
	(b) Two forced and two induced	Balanced draft furnace		
	*(i) One forced or one induced off		Fan breaker auxiliary switch	Run-back load
	**(ii) Two forced off		Fan breaker auxiliary switch	Trip fuel supply, induced Draft fans (optional)
	**(iii) Two induced off		Fan breaker auxiliary switch	Trip forced draft fans Trip fuel supply
(6)	Fuel supply conditions	Gas	Low pressure	Trip fuel supply
			High pressure	Alarm
		Oil	Low pressure	Trip fuel supply
			Low temperature	Alarm
			Loss of atomizing medium	Trip fuel supply
		Coal	Coal flow detector	Alarm
(7)	Furnace pressure high	All	Pressure switch	Trip fuel supply
	low	All	Pressure switch	Alarm or trip fuel supply
	high-low	Balanced draft	Vacuum switch	H-trip fuel supply L-alarm
(8)	Loss of stable flame	Gas or oil fired	Flame detectors or mirrors or boiler TV	Trip fuel supply
		Coal fired	Flame detector or mirrors or boiler TV	Trip fuel supply
(9)	Combustibles too high	Gas, oil, or coal fired	Combustible and oxygen analyzer or both (Optional)	Alarm
			Stack TV (Optional) smoke detector	Alarm
(10)	Loss of control systems power supply	Gas, oil, or coal fired	Low-voltage relay or low air-pressure	Alarm or fuel trip
(11)	Feedwater quality	All	Conductivity	Alarm or fuel trip
			Oxygen	Alarm
(12)	Combinations of 1 through 10	All types	Operator by observation	Trip fuel supply

*If one fan is tripped while the other is running, close the damper on the tripped fan.
**If both fans trip, open both fan dampers to allow natural draft in a controlled manner to prevent excessive furnace pressure during fan coastdown.

Copyright © 1985 IEEE All Rights Reserved

Table 2—Steam Turbine

	Hazard or Alarm Condition	Sensor	Action
(1)	Low lube oil pressure	Oil-pressure device	*Trip unit
(2)	Overspeed	Governors, mechanical, or electrical	Close control and intercept valves to reduce steam flow. Trip unit if trip speed is reached.
(3)	High vibration	Vibration pickup	*Trip unit
(4)	High differential expansion	Differential expansion detector	*Trip unit
(5)	Stage overheating	Thermocouples	*Trip unit
(6)	Low condenser vacuum	Vacuum device	*Trip unit
(7)	Thrust bearing failure	Differential oil-pressure device or spindle position sensor	*Trip unit
(8)	Generator motoring	Both stop valves closed with generator breakers closed Exhaust-hood temperature switch Reverse power relay Differential pressure switch	Close all valves and trip generator breaker and excitation and enable breaker failure protection
(9)	Low throttle pressure	Instruments or pressure transducer	If initial pressure regulator is in service, trip generator breaker at low limit; otherwise trip turbine immediately
(10)	System under frequency operation	Frequency relay and timer	Trip generator breaker
(11)	Turbine water damage (a) From reheat sprays	Reheat spray valves position	(See text, Section 10.1, Part 7.)
	(b) Feedwater heater water induction	Feedwater heater high level	Close extraction valves on high water level or turbine trip per vendor recommendation
	(c) Water carryover from drum	High drum level switch	Trip or alarm
(12)	Loss of power supply to EHC system	Undervoltage relay	Trip
(13)	Any one of (1) through (12)	Operator by observation	Trip all valves closed, then trip unit.

*Trip unit includes tripping main, reheat and intercept valves closed, stopping fuel supply to the boiler, and tripping generator breaker(s), field and normal station supply breakers sequentially.

Copyright © 1985 IEEE All Rights Reserved

Copyright The Institute of Electrical and Electronics Engineers, Inc.
Provided by IHS under license with IEEE
No reproduction or networking permitted without license from IHS
Not for Resale

Table 3—Generator

	Hazard or Alarm Condition	Sensor	Action
(1)	Stator		
	(a) Phase faults	Generator and overall differential relays	*Trip unit
	(b) Stator ground faults	Current or voltage relay in neutral	*Trip unit
	(c) High temperature	H_2 temperature switch or stator thermocouple or RTDs or core monitor	Alarm
	(d) Loss of stator coolant	Temperature, pressure or flow device and generator current	Runback turbine load and stator current to manufacturer specified load. If not successful after specified time delay, trip unit
	(e) Excessive magnetic flux	Volts/hertz relay	*Trip unit
(2)	System faults		
	(a) Unbalanced armature current	Negative sequence relay	**Trip generator breaker and excitation
	(b) Loss of transmission System load	Megawatts/generator current Turbine speed	Keep voltage regulator on automatic Reduce load to auxiliaries only Close turbine intercept valves and control valves to reduce speed
	(c) Transmission load greater than generator capability	Under frequency relay	Trip on minimum frequency or to unit auxiliaries only if system policy permits
(3)	Excitation system		
	(a) Loss of excitation	Loss of excitation relay	**Trip unit
	(b) Over excitation	Field voltage or current Time relays	Control action to reduce excitation to allowable values. Trip if allowable value cannot be attained in specific time.
	(c) Regulator failure	Voltage relays in regulator	Transfer to manual dc control function
	(d) Field ground	Field ground relay or detector	Alarm, run-back turbine load and trip unit
	(e) Field overheating	Field temperature transducer Field overcurrent relay	Alarm and after time delay trip unit
(4)	Generator bus		
	(a) Phase faults	Overall differential	*Trip unit
	(b) Ground faults	Neutral voltage or current relay	*Trip unit
	(c) Loss of isolated phase Bus cooling	Relay, interlock, or flow switch	Transfer to standby cooling unit or run load back to self-cooled rating

*Trip unit includes tripping main, reheat and intercept valves closed, stopping fuel supply to the boiler, and tripping generator breaker(s), field and normal station supply breakers.
**Enable breaker failure protection for all tripping of system faults.

Copyright © 1985 IEEE All Rights Reserved

Copyright The Institute of Electrical and Electronics Engineers, Inc.
Provided by IHS under license with IEEE
No reproduction or networking permitted without license from IHS Not for Resale

Table 4—Main Transformer

	Hazard or Alarm Condition	Sensor	Action
(1)	Winding	Overall differential relay	*Trip unit
		Neutral overcurrent ground relay with time delay (Optional)	*Trip unit
		Fault pressure relay	*Trip unit
		Backup overcurrent relays	*Trip unit
		High temperature	*Alarm or trip unit
(2)	Overexcitation	Volts per hertz relay	*Trip unit
(3)	High temperature (top oil)	Top oil thermometer	Alarm or trip
(4)	Generated gas	Volume gas collector	Alarm

*Trip unit includes tripping main, reheat and intercept valves closed, stopping fuel supply to the boiler, and tripping generator breaker(s), field and normal station supply breakers.

Table 5—Auxiliary System

	Hazard or Alarm Condition	Sensor	Action
(1)	Auxiliaries systems transformer fault	See Table 4	See Table 4
(2)	Auxiliary switchgear bus faults	Overcurrent relays Bus differential relays	Trip supply breakers and block transfer if provided
(3)	Medium-voltage motors		
	(a) Overload	Overcurrent relay	Alarm
	(b) Phase faults, overload, and locked rotor	Overcurrent relay Differential at motor	Trip feeder breaker
	(c) Ground faults		
	Grounded systems	Ground sensor	Trip feeder breaker alarm
	Ungrounded systems	Ground detector	
	(d) High-winding temperature	RTD or thermocouple	Alarm
(4)	Low-voltage bus and cable fault	Breaker trip devices	Trip supply breaker
(5)	Supply transformer to low-voltage bus fault	Overcurrent relays	Trip supply

Copyright © 1985 IEEE All Rights Reserved

Copyright The Institute of Electrical and Electronics Engineers, Inc.
Provided by IHS under license with IEEE
No reproduction or networking permitted without license from IHS
Not for Resale

Table 6—Emergency Power Systems

(1)	Battery (vital dc)
	(a) Emergency bearing oil pump
	(b) Emergency seal oil pumps
	(c) Emergency lighting
	(d) Annunciators
	(e) Protective relay power
	(f) Breaker closed trip power
	(g) Fuel safety and unit trip
(2)	Essential ac power
	(a) Turning gear
	(b) Battery charger
	(c) Air heaters (boiler)
	(d) Elevators
	(e) Fire-protection system
	(f) Emergency lighting
	(g) Vital service auxiliary oil pumps
(3)	Essential ac control
	(a) Data logger and computer
	(b) Combustion control, fuel safety, burner logic, and master logic
	(c) Communications
	(d) Annunciator
	(e) Recording meters
	(f) Programmable controller, remote multiplexers

Copyright © 1985 IEEE All Rights Reserved

Copyright The Institute of Electrical and Electronics Engineers, Inc.
Provided by IHS under license with IEEE
No reproduction or networking permitted without license from IHS Not for Resale