**IEEE Std 493-1997**
(Revision of IEEE Std 493-1990)

# IEEE Recommended Practice for the Design of Reliable Industrial and Commercial Power Systems

Sponsor

**Power Systems Reliabilty Subcommittee**
**of the**
**Power Systems Engineering Committee**
**of the**
**IEEE Industry Applications Society**

Approved 16 December 1997

**IEEE Standards Board**

**Abstract:** The fundamentals of reliability analysis as it applies to the planning and design of industrial and commercial electric power distribution systems are presented. Included are basic concepts of reliability analysis by probability methods, fundamentals of power system reliability evaluation, economic evaluation of reliability, cost of power outage data, equipment reliability data, examples of reliability analysis. Emergency and standby power, electrical preventive maintenance, and evaluating and improving reliability of the existing plant are also addressed. The presentation is self-contained and should enable trade-off studies during the design of industrial and commercial power systems design, installation, and maintenance practices for electrical power and grounding (including both power-related and signal-related noise control) of sensitive electronic processing equipment used in commercial and industrial applications are presented.
**Keywords:** Designing reliable industrial and commercial power systems, equipment reliability data, industrial and commercial power systems reliability analysis, reliability analysis.

First Printing
August 1998
SH94572

---

The Institute of Electrical and Electronics Engineers, Inc.
345 East 47th Street, New York, NY 10017-2394, USA

Copyright © 1998 by the Institute of Electrical and Electronics Engineers, Inc.
All rights reserved. Published 1998. Printed in the United States of America

ISBN 1-55937-969-3

*No part of this publication may be reproduced in any form, in an electronic retrieval system or otherwise, without the prior written permission of the publisher.*

**IEEE Standards** documents are developed within the Technical Committees of the IEEE Societies and the Standards Coordinating Committees of the IEEE Standards Board. Members of the committees serve voluntarily and without compensation. They are not necessarily members of the Institute. The standards developed within IEEE represent a consensus of the broad expertise on the subject within the Institute as well as those activities outside of IEEE that have expressed an interest in participating in the development of the standard.

Use of an IEEE Standard is wholly voluntary. The existence of an IEEE Standard does not imply that there are no other ways to produce, test, measure, purchase, market, or provide other goods and services related to the scope of the IEEE Standard. Furthermore, the viewpoint expressed at the time a standard is approved and issued is subject to change brought about through developments in the state of the art and comments received from users of the standard. Every IEEE Standard is subjected to review at least every five years for revision or reaffirmation. When a document is more than five years old and has not been reaffirmed, it is reasonable to conclude that its contents, although still of some value, do not wholly reflect the present state of the art. Users are cautioned to check to determine that they have the latest edition of any IEEE Standard.

Comments for revision of IEEE Standards are welcome from any interested party, regardless of membership affiliation with IEEE. Suggestions for changes in documents should be in the form of a proposed change of text, together with appropriate supporting comments.

Interpretations: Occasionally questions may arise regarding the meaning of portions of standards as they relate to specific applications. When the need for interpretations is brought to the attention of IEEE, the Institute will initiate action to prepare appropriate responses. Since IEEE Standards represent a consensus of all concerned interests, it is important to ensure that any interpretation has also received the concurrence of a balance of interests. For this reason IEEE and the members of its technical committees are not able to provide an instant response to interpretation requests except in those cases where the matter has previously received formal consideration.

Comments on standards and requests for interpretations should be addressed to:

Secretary, IEEE Standards Board
445 Hoes Lane
P.O. Box 1331
Piscataway, NJ 08855-1331
USA

Note: Attention is called to the possibility that implementation of this standard may require use of subject matter covered by patent rights. By publication of this standard, no position is taken with respect to the existence or validity of any patent rights in connection therewith. The IEEE shall not be responsible for identifying patents for which a license may be required by an IEEE standard or for conducting inquiries into the legal validity or scope of those patents that are brought to its attention.

Authorization to photocopy portions of any individual standard for internal or personal use is granted by the Institute of Electrical and Electronics Engineers, Inc., provided that the appropriate fee is paid to Copyright Clearance Center. To arrange for payment of licensing fee, please contact Copyright Clearance Center, Customer Service, 222 Rosewood Drive, Danvers, MA 01923 USA; (508) 750-8400. Permission to photocopy portions of any individual standard for educational classroom use can also be obtained through the Copyright Clearance Center.

# Introduction

(This introduction is not a part of IEEE Std 493-1997, IEEE Recommended Practice for the Design of Reliable Industrial and Commercial Power Systems.)

The design of reliable industrial and commercial power systems is of considerable interest to many people. Prior to 1962, a qualitative viewpoint was taken when attempting to achieve this objective. The need for a quantitative approach was first recognized in the early 1960s when a small group of pioneers led by W. H. Dickinson organized an extensive AIEE survey of the reliability of electrical equipment in industrial plants. The AIEE survey that was taken in 1962 was followed by several IEEE reliability surveys, which were published in 1973 through 1979. These surveys from the the 1970s were the basis for the reliability data contained in IEEE Std 493-1980. Six additional IEEE reliability surveys have been conducted and published during the 1980s and have been updated in this revision of IEEE Std 493-1997. The 1990 edition included pertinent tutorial reliability material and the cost of power interruptions data.

IEEE Std 493-1997 presents two new chapters, Chapter 9, a new methodology for estimating the frequency of voltage sags at industrial and commercial sites, and Chapter 10, a methodology for estimating the number of tests required to demonstrate reliability of emergency and standby systems. New appendixes have been added on high- and low-voltage circuit breaker reliability data, guarantees of gas turbines and combined cycle generating units, transmission line and equipment outage data, interruption costs, and expectations for service reliability. The existing appendices have been updated.

Tutorial reliability sessions on the design of industrial and commercial power systems were conducted at technical conferences of the IEEE Industry Applications Society in 1971, 1976, 1980, and 1991.

This recommended practice was prepared by a working group of the Power Systems Reliability Subcommittee, Power Systems Engineering Committee, Industrial and Commercial Power Systems Department of the IEEE Industry Application Society.

This IEEE Recommended Practice serves as a companion publication to the following other Recommended Practices prepared by the IEEE Industrial and Commercial Power Systems Department:

— IEEE Std 141-1993, IEEE Recommended Practice for Electric Power Distribution for Industrial Plants (IEEE Red Book).

— IEEE Std 142-1991, IEEE Recommended Practice for Grounding of Industrial and Commercial Power Systems (IEEE Green Book).

— IEEE Std 241-1990, IEEE Recommended Practice for Electric Power Systems in Commercial Buildings (IEEE Gray Book).

— IEEE Std 242-1986, IEEE Recommended Practice for Protection and Coordination of Industrial and Commercial Power Systems (IEEE Buff Book).

— IEEE Std 399-1990, IEEE Recommended Practice for Industrial and Commercial Power Systems Analysis (IEEE Brown Book).

— IEEE Std 446-1995, IEEE Recommended Practice for Emergency and Standby Power Systems for Industrial and Commercial Applications (IEEE Orange Book).

— IEEE Std 602-1996, IEEE Recommended Practice for Electric Systems in Health Care Facilities (IEEE White Book).

— IEEE Std 739-1995, IEEE Recommended Practice for Energy Management in Commercial and Industrial Facilities (IEEE Bronze Book).

— IEEE Std 1015-1997, IEEE Recommended Practice for Applying Low-Voltage Circuit Breakers Used in Industrial and Commercial Power Systems (IEEE Blue Book).

— IEEE Std 1100-1992, IEEE Recommended Practice for Powering and Grounding Sensitive Electronic Equipment (IEEE Emerald Book).

## Participants

The following members of the working group of the Power Systems Reliability Subcommittee contributed to these chapters:

**Don O. Koval**, *Chair*

Chapter 1: Introduction—**D. O. Koval**, *Chair;* C. R. Heissing

Chapter 2: Planning and design—**C. R. Heising**, *Chair;* B. G. Douglas, P. E. Gannon, C. R. Heising, A. D. Patton

Chapter 3: Summary of equipment reliability data—**W. F. Braun**, *Chair;* B. G. Douglass, C. R. Heising, D. O. Koval, P. O'Donnell

Chapter 4: Evaluating and improving the reliability of an existing plant—**C. E. Becker**, *Chair;* B. G. Douglas, C. R. Heising, D. O. Koval

Chapter 5: Electrical preventative maintenance—**C. R. Heising**, *Chair;* S. J. Wells

Chapter 6: Emergency and standby power—**A. Kusko**, *Chair;* C. R. Heising, D. O. Koval

Chapter 7: Examples of reliability analysis and cost evaluation—**R. Lennig**, *Chair;* M. H. J. Bollen, P. E. Gannon, R. H. Gauger, C. R. Heising, D. O. Koval, D. J. Love

Chapter 8: Basic concepts of reliability analysis by probability methods—**A. D. Patton**, *Chair;* M. H. J. Bollen, R. H. Gauger, C. R. Heising, D. O. Koval, D. J. Love, C. Singh

Chapter 9: Voltage sag analysis—**L. E. Conrad**, *Chair;* **M. H. J. Bollen,** *Vice Chair;* C. E. Becker, W. F. Braun, J. Csomay, B. G. Douglas, U. Grasselli, D. O. Koval

Chapter 10: Reliability compliance testing for emergency and standby power systems—**D. O. Koval**, *Chair;* C. R. Heising

Other members of the working group who contributed to the development of the 1997 version of this recommended practice are as follows:

K. W. Carrick
E. Golpashin
P. P. Khera
A. Kusko
D. W. McWilliams
A. T. Norris
S. J. Wells

*Deceased

The ballot group had the following membership:

Paul F. Albrecht
James H. Beall
Richard W. Becker
Carl E. Becker
Math H. J. Bollen
William F. Braun
Kenneth W. Carrick
Rene Castenschiold
Larry Conrad
Willard H. Dickenson
Bruce G. Douglas
Jerry M. Frank
Philip E. Gannon
Robert H. Gauger
Edward S. Golpashin
Umberto Grasselli
Charles R. Heising
Erling Hesla
Robert W. Ingham
Gordon S. Johnson
Don O. Koval
Alexander Kusko
Wei-Jen Lee
Richard C. Lennig
Robert G. Medley
William J. Moylan
Andrew T. Norris
Pat O'Donnell
A. DeWitt Patton
James R. Pfafflin
Peter Pollack
Melvin Sanders
Vincent Saporita
Robert Simpson
Chanan Singh
Stanley J. Wells
Donald W. Zipse

When the IEEE Standards Board approved this recommended practice on September 16, 1997, it had the following membership:

**Donald C. Loughry,** *Chair* **Richard J. Holleman,** *Vice Chair*
**Andrew G. Salem,** *Secretary*

Clyde R. Camp
Stephen L. Diamond
Harold E. Epstein
Donald C. Fleckenstein
Jay Forster*
Thomas F. Garrity
Donald N. Heirman
Jim Isaak
Ben C. Johnson
Lowell Johnson
Robert Kennelly
E. G. "Al" Kiener
Joseph L. Koepfinger*
Stephen R. Lambert
Lawrence V. McCall
L. Bruce McClung
Marco W. Migliaro
Louis-François Pau
Gerald H. Peterson
John W. Pope
Jose R. Ramos
Ronald H. Reimer
Ingo Rüsch
John S. Ryan
Chee Kiow Tan
Howard L. Wolfman

*Member Emeritus

Also included are the following nonvoting IEEE Standards Board liaisons:

Satish K. Aggarwal
Alan H. Cookson

Erika H. Murphy
*IEEE Standards Project Editor*

## Contents

Chapter 1
Introduction ..... 1

1.1 Objectives and scope ..... 1
1.2 IEEE reliability surveys of industrial plants ..... 2
1.3 How to use this book ..... 3
1.4 Definitions ..... 4

Chapter 2
Planning and design ..... 7

2.1 Fundamentals of power system reliability evaluation ..... 7
2.2 Costs of interruptions—economic evaluation of reliability ..... 20
2.3 Cost of scheduled electrical preventive maintenance ..... 31
2.4 Effect of scheduled electrical preventive maintenance on failure rate ..... 32
2.5 Bibliography ..... 33

Chapter 3
Summary of equipment reliability data ..... 37

3.1 Introduction ..... 37
3.2 Part 1: Most recent equipment reliability surveys (1976–1989) ..... 38
3.3 Part 2: Equipment reliability surveys conducted prior to 1976 ..... 62
3.4 Bibliography ..... 76

Chapter 4
Evaluating and improving the reliability of an existing plant ..... 79

4.1 Introduction ..... 79
4.2 Utility supply availability ..... 80
4.3 Where to begin—the plant one-line diagram ..... 82
4.4 Plant reliability analysis ..... 83
4.5 Circuit analysis and action ..... 84
4.6 Other vulnerable areas ..... 86
4.7 Conclusion ..... 87
4.8 Bibliography ..... 88

Chapter 5
Electrical preventive maintenance ..... 89

5.1 Introduction ..... 89
5.2 Definitions ..... 89
5.3 Relationship of maintenance practice and equipment failure ..... 89
5.4 Design for electrical preventive maintenance ..... 91
5.5 Electrical equipment preventive maintenance ..... 92

5.6 Bibliography ..... 93

Chapter 6
Emergency and standby power ..... 95

6.1 Introduction ..... 95
6.2 Interruption frequency and duration ..... 95
6.3 Equipment selection ..... 95
6.4 Descriptions and applications of available components ..... 96
6.5 Selection and application data ..... 100
6.6 Bibliography ..... 100

Chapter 7
Examples of reliability analysis and cost evaluation ..... 101

7.1 Examples of reliability and availability analysis of common low-voltage industrial power distribution systems ..... 101
7.2 Cost data applied to examples of reliability and availability analysis of common low-voltage industrial power distribution systems ..... 128
7.3 Bibliography ..... 134

Chapter 8
Basic concepts of reliability analysis by probability methods ..... 135

8.1 Introduction ..... 135
8.2 Definitions ..... 135
8.3 Basic probability theory ..... 135
8.4 Reliability measures ..... 139
8.5 Reliability evaluation methods ..... 140
8.6 Bibliography ..... 148

Chapter 9
Voltage sag analysis ..... 149

9.1 Introduction ..... 149
9.2 Voltage sag characteristics and reporting ..... 150
9.3 Line faults—A major cause for voltage sags ..... 152
9.4 Voltage sag predictions ..... 153
9.5 Examples for rectangular sag calculations ..... 163
9.6 Nonrectangular sags ..... 168
9.7 Development of voltage sag coordination charts ..... 172
9.8 Conclusions and future work ..... 179
9.9 Bibliography ..... 180

Chapter 10
Reliability compliance testing for emergency and standby power systems ..... 183

10.1 Introduction ..... 183
10.2 Definition of success ratio ..... 184
10.3 Acceptance sampling plan ..... 185
10.4 Minimizing manufacturer and customer risks ..... 185
10.5 Sequential testing plan ..... 187
10.6 Development of a sequential testing plan ..... 188
10.7 Compliance sequential test acceptance limits ..... 189
10.8 Compliance sequential test rejection limits ..... 190
10.9 Case study ..... 192
10.10 Discussion of sequential tests ..... 194
10.11 Conclusion ..... 196
10.12 Bibliography ..... 196

Appendix A
Report on reliability survey of industrial plants (Parts 1, 2, and 3) .....

Appendix B
Report on reliability survey of industrial plants (Parts 4, 5, and 6) .....

Appendix C
Cost of electrical interruptions to commercial buildings .....

Appendix D
Reliability of electric utility supplies to industrial plants .....

Appendix E
Report of switchgear bus reliability survey of industrial plants and commercial buildings .....

Appendix F
Working group procedure for conducting an equipment reliability survey .....

Appendix G
Report of transformer reliability survey—industrial plants and commercial buildings .....

Appendix H
Report of large motor reliability survey of industrial and commercial installations (Parts I, II, and III) .....

Appendix I
Reliability study of cable, terminations, and splices by electric utilities in the Northwest .....

Appendix J
Summary of CIGRE 13-06 working group worldwide reliability data, maintenance cost data, and studies on the worth of improved reliability of high-voltage circuit breakers .....

Appendix K
Report of circuit breaker reliability survey of industrial and commercial installations .....

Appendix L
Reliability survey of 600 to 1800 kW diesel and gas-turbine generating units .....

Appendix M
Part 1—Comprehensive bibliography on electrical service interruption costs;
Part 2—Statistical and analytical evaluation of the duration and cost of consumer interruptions .....

# IEEE Recommended Practice for the Design of Reliable Industrial and Commercial Power Systems

## Chapter 1
## Introduction

### 1.1 Objectives and scope

The objective of this book is to present the fundamentals of reliability analysis applied to the planning and design of industrial and commercial electric power distribution systems. The intended audience for this material is primarily consulting engineers and plant electrical engineers.

The design of reliable industrial and commercial power distribution systems is important because of the high cost associated with power outages. It is necessary to consider the cost of power outages when making design decisions for new power distribution systems as well as to have the ability to make quantitative “cost-versus-reliability” trade-off studies. The lack of credible data concerning equipment reliability and the cost of power outages has hindered engineers in making such studies.

The authors of this book have attempted to provide sufficient information so that reliability analyses can be performed on power systems without requiring cross-references to other texts. Included are

— Basic concepts of reliability analysis by probability methods
— Fundamentals of power system reliability evaluation
— Economic evaluation of reliability
— Cost of power outage data
— Equipment reliability data
— Examples of reliability analysis

In addition, discussion and information are provided on

— Emergency and standby power
— Electrical preventive maintenance
— Evaluating and improving reliability of existing facilities

Two new chapters have been added to this edition of IEEE Std 493:

— Chapter 9,Voltage sag analysis
— Chapter 10, Reliability compliance testing for emergency and standby power systems

Copyright © 1998 IEEE. All rights reserved.

Chapter 9 meets the demand for a methodology for estimating the frequency of voltage sags (which may interrupt processes and systems) at industrial and commercial sites. Chapter 10 presents a methodology for estimating the number of tests required to demonstrate reliability compliance of devices and systems while considering the reliability constraints dictated by the manufacturer and the customer.

New appendixes have been added to IEEE Std 493, and existing appendixes have been updated as follows:

Appendix J, "Summary of CIGRE 13.06 Working Group Worldwide Reliability Data and Maintenance Cost Data on High Voltage Circuit Breakers Above 63 kV," contains a summary of the most significant reliability data and maintenance cost data from two CIGRE 13.06 Working Group worldwide reliability surveys of high-voltage circuit breakers rated 63 kV and above.

Appendix M, "Reliability/Availability Guarantees of Gas Turbines and Combined Cycle Generating Units," contains one manufacturer's suggestion on how to write a reliability/availability guarantee when industrial firms are purchasing gas turbine generating units or combined cycle units.

Appendix N, "Transmission Line and Equipment Outage Data," contains the failure rates of transmission line equipment that can be used for predicting voltage sags at a particular industrial or commercial site caused by transmission line outages on adjacent feeders and/or from the entire electric network configuration.

Appendix O, "Interruption Costs, Consumer Satisfaction and Expectations for Service Reliability," presents a recent study on the cost of service interruptions to various industrial and commercial types. This data can be used for evaluating the cost-reliability worth of various industrial and commercial electrical configurations.

Appendix P, "Survey Results of Low-Voltage Circuit Breakers as Found During Maintenance Testing," contains the results of a low-voltage circuit reliability survey achieved through the use of available results from testing during preventive maintenance.

A quantitative reliability analysis includes making a disciplined evaluation of alternate power distribution system design choices. When costs of power outages at the various building and plant locations are factored into the evaluation, the decisions can be based upon *total owning cost* over the useful life of the equipment rather than simply the *first cost* of the system. The material in this book should enable engineers to make more use of quantitative cost vs. reliability tradeoff studies during the design of industrial and commercial power systems.

## 1.2 IEEE reliability surveys of industrial plants

From 1973 through 1996, the Power Systems Reliability Subcommittee of the Power Systems Engineering Committee of the IEEE Industry Applications Society conducted and published the results of extensive surveys of the reliability of electrical equipment in industrial

 Copyright © 1998 IEEE. All rights reserved.

plants and also the cost of power outages for both industrial plants and commercial buildings. This included motors, motor starters, generators, power transformers, rectifier transformers, circuit breakers, disconnect switches, bus duct, switchgear bus-bare, switchgear bus-insulated, open wire, cable, cable joints, cable terminations, and electric utility power supplies. The results from these surveys have been published in 16 IEEE committee reports, 15 of which are included in this book in Appendixes A, B, C, D, E, G, H, K, and P. Appendix F gives the procedure used for conducting these surveys. It has been considered important that the "reasons for conducting the survey" be written down at the beginning of each new survey. It has also been considered important that the final report receive both oral and written discussion at the end of each survey. Some of the IEEE surveys have also included the cost of power interruptions, critical service loss duration time, and plant restart time. The most important results from these 16 surveys have been summarized in Chapters 2, 3, and 5. Table 3-2 contains a summary of the latest equipment reliability data from these surveys, and these values are suggested for use in the absence of better data that may be available from the reader's own experience. Table 3-1 presents a guide of where to look in this book for additional reliability data for each of several equipment categories.

Four important equipment reliability surveys conducted by others have been summarized and included as Appendixes I, J, and N; these appendixes supplement the IEEE equipment reliability surveys in some categories in which there has been little or no data and in other categories in which the data is more recent and/or much more extensive. These four equipment reliability surveys include

— Cable, cable splices, and cable terminations
— High-voltage circuit breakers above 63 kV
— Diesel and gas turbine generating units
— Transmission lines and terminal equipment

A paper on electrical service interruption costs is presented in Appendix O.

The reliability survey data contained in this book provide historical experience to those who have not been able to collect their own data. Such data can be an aid in analyzing, designing, or redesigning an industrial or commercial system and can provide a basis for the quantitative comparison of alternate designs.

## 1.3 How to use this book

The methods of reliability analysis provided in this book are based upon probability and statistics. Some users of this book may wish to read Chapter 8 on basic probability concepts before reading Chapter 2 on planning and design. Other users may wish to start with Chapter 2 and not wish to attempt to fully understand the derivation of the statistical formulas given in 2.1.9 and 2.1.11.1.

The most important parts of planning and design are covered in 2.1 and 2.2 on fundamentals of power system reliability evaluation and on the economic evaluation of reliability. Chapter 7 gives seven examples using these methods of analysis. These examples cover some

Copyright © 1998 IEEE. All rights reserved.

of the most common decisions that engineers are faced with when designing a power distribution system. Some discussion on the limitations of reliability and availability predictions is included in the latter part of 7.1.

Those wishing to obtain equipment reliability data should go to Chapter 3. Those wishing to obtain data on the cost of electrical interruptions to industrial plants or commercial buildings should consult 2.2. Any data on costs may need to be updated to take into account the effects of inflation.

The importance of electrical preventive maintenance in planning and design is covered in 2.3 and 2.4. Chapter 5 discusses the subject in further detail and contains data showing the effect of maintenance quality on equipment failure rates.

Many reliability studies need to be followed up by considerations for emergency and standby power. This subject is covered in Chapter 6 and may also be considered part of planning and design.

An approach to evaluating and upgrading the reliability of an existing plant is presented in Chapter 4. Some users of this book may wish to start with this chapter.

## 1.4 Definitions

The following definitions should be used in conjunction with this recommended practice:

**1.4.1 availability:** As applied either to the performance of individual components or to that of a system, it is the long-term average fraction of time that a component or system is in service and satisfactorily performing its intended function. An alternative and equivalent definition for availability is the steady-state probability that a component or system is in service.

**1.4.2 component:** A piece of electrical or mechanical equipment, a line or circuit, or a section of a line or circuit, or a group of items that is viewed as an entity for the purposes of reliability evaluation.

**1.4.3 electrical equipment:** A general term including materials, fittings, devices, appliances, fixtures, apparatus, machines, etc., used as a part of, or in connection with, an electric installation.

**1.4.4 electrical preventive maintenance:** A system of planned inspection, testing, cleaning, drying, monitoring, adjusting, corrective modification, and minor repair of electrical equipment to minimize or forestall future equipment operating problems or failures, which, depending upon equipment type, may require exercising or proof testing.

**1.4.5 expected failure duration:** The expected or long-term average duration of a single failure event.

 Copyright © 1998 IEEE. All rights reserved.

**1.4.6 expected interruption duration:** The expected, or average, duration of a single-load interruption event.

**1.4.7 exposure time:** The time during which a component is performing its intended function and is subject to failure.

**1.4.8 failure:** Any trouble with a power system component that causes any of the following to occur:

- Partial or complete plant shutdown, or below-standard plant operation
- Unacceptable performance of user's equipment
- Operation of the electrical protective relaying or emergency operation of the plant electrical system
- De-energization of any electric circuit or equipment

A failure on a public utility supply system may cause the user to have either of the following:

- A power interruption or loss of service
- A deviation from normal voltage or frequency outside the normal utility profile

A failure on an in-plant component causes a forced outage of the component; that is, the component is unable to perform its intended function until it is repaired or replaced. The terms "failure" and "forced outage" are often used synonymously.

**1.4.9 failure rate:** The mean number of failures of a component per unit exposure time. Usually exposure time is expressed in years and failure rate is given in failures per year.

**1.4.10 forced outage:** An outage (failure) that cannot be deferred.

**1.4.11 forced unavailability:** The long-term average fraction of time that a component or system is out of service due to a forced outage (failure).

**1.4.12 interruption:** The loss of electric power supply to one or more loads.

**1.4.13 interruption frequency:** The expected (average) number of power interruptions to a load per unit time, usually expressed as interruptions per year.

**1.4.14 mean time between failures (MTBF):** The mean exposure time between consecutive failures of a component. It can be estimated by dividing the exposure time by the number of failures in that period, provided that a sufficient number of failures has occurred in that period.

**1.4.15 mean time to repair (MTTR):** The mean time to repair or replace a failed component. It can be estimated by dividing the summation of repair times by the number of repairs, and, therefore, it is practically the average repair time.

Copyright © 1998 IEEE. All rights reserved.

**1.4.16 minimum cut-set:** A set of components that, if removed from the system, results in loss of continuity to the load point being investigated and that does not contain as a subset any set of components that is itself a cut-set of the system.

**1.4.17 offline system:** A system that is dormant until it is called upon to operate, such as a diesel generator that is started up when a power failure occurs.

**1.4.18 online system:** A system that is operating at all times, such as an inverter supplied by dc power via the primary power source through a battery charger.

**1.4.19 outage:** The state of a component or system when it is not available to properly perform its intended function due to some event directly associated with that component or system.

**1.4.20 repair time:** The repair time of a tailed component or the duration of a failure is the clock time from the occurrence of the failure of a component to the time when the component is restored to service, either by repair of the failed component or by substitution of a spare component for the failed component. (Also called the duration of a failure). It includes time for diagnosing the trouble, locating the failed component, waiting for parts, repairing or replacing, testing, and restoring the component to service. It is not the time required to restore service to a load by putting alternate circuits into operation. The terms “repair time” and “forced outage duration” are often used synonymously.

**1.4.21 scheduled outage:** An outage that results when a component is deliberately taken out of service at a selected time, usually for purposes of construction, maintenance, or repair.

**1.4.22 scheduled outage duration:** The period from the initiation of a scheduled outage until construction, preventive maintenance, or repair work is completed and the affected component is made available to perform its intended function.

**1.4.23 scheduled outage rate:** The mean number of scheduled outages of a component per unit exposure time.

**1.4.24 switching time:** The period from the time a switching operation is required due to a component failure until that switching operation is completed. Switching operations include such operations as throwover to an alternate circuit, opening or closing a sectionalizing switch or circuit breaker, reclosing a circuit breaker following a trip-out due to a temporary fault, etc.

**1.4.25 system:** A group of components connected or associated in a fixed configuration to perform a specified function of distributing power.

**1.4.26 unavailability:** The long-term average fraction of time that a component or system is out of service due to failures or scheduled outages. An alternative definition is the steady-state probability that a component or system is out of service due to failures or scheduled outages. Mathematically, unavailability = (1–availability).

 Copyright © 1998 IEEE. All rights reserved.

# Chapter 2
# Planning and design

## 2.1 Fundamentals of power system reliability evaluation

### 2.1.1 Reliability evaluation fundamentals

Fundamentals necessary for a quantitative reliability evaluation in electric power systems include definitions of basic terms, discussions of useful measures of system reliability and the basic data needed to compute these indexes, and a description of the procedure for system reliability analysis including computation of quantitative reliability indexes.

### 2.1.2 Power system design considerations

An important aspect of power system design involves consideration of the service reliability requirements of loads that are to be supplied and the service reliability that will be provided by any proposed system. System reliability assessment and evaluation methods based on probability theory that allow the reliability of a proposed system to be assessed quantitatively are finding wide application today. Such methods permit consistent, defensible, and unbiased assessments of system reliability that are not otherwise possible.

The quantitative reliability evaluation methods presented here permit reliability indexes for any electric power system to be computed from knowledge of the reliability performance of the constituent components of the system. Thus, alternative system designs can be studied to evaluate the impact on service reliability and cost of changes in component reliability, system configuration, protection and switching scheme, or system operating policy including maintenance practice.

### 2.1.3 Definitions

Terms previously defined in Chapter 1 are commonly used in the survey of the reliability of electric equipment in industrial plants (see IEEE Committee Report [B15])[1]. Refer to 1.4.

### 2.1.4 System reliability indexes

The basic system reliability indexes (see Billinton and Allen [B2], Dickinson [B8], Endrenyi [B9], and Patton and Ayoub [B19]) that have proven most useful and meaningful in power distribution system design are

— Load interruption frequency
— Expected duration of load interruption events

[1]The numbers in brackets preceded by the letter B correspond to those of the bibliography in 2.5.

Copyright © 1998 IEEE. All rights reserved.

These indexes can be readily computed using the methods that will be described later. The two basic indexes (interruption frequency and expected interruption duration) can be used to compute other indexes that are also useful:

— Total expected (average) interruption time per year (or other time period)
— System availability or unavailability as measured at the load supply point in question
— Expected demanded, but unsupplied, energy per year

It should be noted here that the disruptive effect of power interruptions is often non-linearly related to the duration of the interruption. Thus, it is often desirable to compute not only an overall interruption frequency but also frequencies of interruptions categorized by the appropriate durations.

### 2.1.5 Data needed for system reliability evaluations

The data needed for quantitative evaluations of system reliability will depend to some extent on the nature of the system being studied and the detail of the study. In general, however, it requires both data on the performance of individual components together with the times required to perform various switching operations.

System component data that are generally required are summarized as follows:

— Failure rates (forced outage rates) associated with different modes of component failure
— Expected (average) time to repair or replace failed component
— Scheduled (maintenance) outage rate of component
— Expected (average) duration of a scheduled outage event

If possible, component data should be based on the historical performance of components in the same environment as those in the proposed system being studied. The reliability surveys conducted by the Power Systems Reliability Subcommittee (see IEEE Committee Reports [B15], [B16]) provide a source of component data when such specific data are not available. These data have been summarized in Chapter 3.

The needed switching time data include the following:

— Expected times to open and close a circuit breaker
— Expected times to open and close a disconnect or throwover switch
— Expected time to replace a fuse link
— Expected times to perform such emergency operations as cutting in clear, installing jumpers, etc.

Switching times should be estimated for the system being studied based on experience, engineering judgment, and anticipated operating practice.

 Copyright © 1998 IEEE. All rights reserved.

### 2.1.6 Method for system reliability evaluation

The method for system reliability evaluation recommended and presented here has evolved over a number of years (see Billinton and Allen [B2], Billinton and Grover [B3], Dickinson [B8], Endrenyi [B9], and Gaver et al., [B11]). The method, called the *minimal-cut-set method*, is believed to be particularly well suited to the study and analysis of electric power distribution systems as found in industrial plants and commercial buildings. The method is systematic and straightforward and lends itself to either manual or computer computation. An important feature of the method is that system weak points can be readily identified, both numerically and nonnumerically, thereby focusing design attention on those sections or components of the system that contribute most to service unreliability. See Chapter 8 for a derivation of the minimal cut-set-method.

The procedure for system reliability evaluation is outlined as follows:

a) Assess the service reliability requirements of the loads and processes that are to be supplied and determine the appropriate service interruption definition or definitions.

b) Perform a failure modes and effects analysis (FMEA) identifying and listing those component failures and combinations of component failures that result in service interruptions and that constitute minimal cut-sets of the system.

c) Compute the interruption frequency contribution, the expected interruption duration, and the probability of each of the minimal cut-sets of step b).

d) Combine the results of step c) to produce system reliability indexes.

These steps will be discussed in more detail in that following subclauses.

### 2.1.7 Service interruption definition

The first step in any electric power system reliability study should be a careful assessment of the power supply quality and continuity required by the loads that are to be served. This assessment should be summarized and expressed in a service interruption definition, which can be used in the succeeding steps of the reliability evaluation procedure. The interruption definition specifies, in general, the reduced voltage level (voltage dip or sag) together with the minimum duration of such a reduced voltage period that results in substantial degradation or complete loss of function of the load or process being served. Frequently reliability studies are conducted on a continuity basis, in which case, interruption definitions reduce to a minimum duration specification with voltage assumed to be zero during the interruption.

Further discussion of interruption definitions as well as examples of such definitions are given in 7.1.2.

A method for calculating the magnitude of voltage sags is given in Chapter 9. Sags can be caused by faults elsewhere on the power system.

Copyright © 1998 IEEE. All rights reserved.

### 2.1.8 Failure modes and effects analysis (FMEA)

The FMEA for power distribution systems amounts to the determination and listing of those component outage events or combinations of component outages that result in an interruption of service at the load point being studied according to the interruption definition that has been adopted. This analysis must be made in consideration of the different types and modes of outages that components may exhibit and the reaction of the system's protection scheme to these events.

The primary result of the FMEA as far as quantitative reliability evaluation is concerned is the list of minimal cut-sets it produces. The use of the minimal cut-sets in the calculation of system reliability indexes is described in Chapter 3 of this book. A minimal cut-set is defined to be a set of components that, if removed from the system, results in loss of continuity to the load point being investigated and that does not contain as a subset any set of components that is itself a cut-set of the system. In the present context, the components in a cut-set are just those components whose overlapping outage results in an interruption according to the interruption definition adopted.

An important nonquantitative benefit of the FMEA is the thorough and systematic thought process and investigation that it requires. Often weak points in system design will be identified before any quantitative reliability indexes are computed. Thus, the FMEA is a useful reliability design tool even in the absence of the data needed for quantitative evaluation.

The FMEA and the determination of minimal cut-sets are most efficiently conducted by considering first the effects of outages of single components and then the effects of overlapping outages of increasing numbers of components. Those cut-sets containing a single component are termed *first-order cut-sets*. Similarly, cut-sets containing two components are termed *second-order cut-sets*, etc. In theory the FMEA should continue until all the minimal cut-sets of the system have been found. In practice, however, the FMEA can be terminated earlier, since high-order cut-sets have low probability compared to lower-order cut-sets. A good rule of thumb is to determine minimal cut-sets up to order $n + 1$ where $n$ is the lowest-order minimal cut-set of the system. Since most power distribution systems have at least some first-order minimal cut-sets, the analysis can usually be terminated after the second-order minimal cut-sets have been found.

### 2.1.9 Computation of quantitative reliability indexes

The list of minimal cut-sets obtained from the FMEA is used to compute system reliability indexes. Since the occurrence of any cut-set will result in system failure, these cut-sets can be regarded as acting in series. The failure frequency and average outage duration can therefore be computed using Equations (2-1) and (2-2).

$$f_s = \text{System interruption frequency} = \sum_i f_{cs_i} \tag{2-1}$$

$$r_s = \text{System expected interruption duration} = \sum_i f_{cs_i}\, r_{cs_i} / f_s \tag{2-2}$$

 Copyright © 1998 IEEE. All rights reserved.

where

$f_{cs_i}$ is the frequency of cut-set event i; and

$r_{cs_i}$ is the expected duration of cut-set event i.

NOTE—These are approximate formulas and should only be used when the various $(f_{cs_i} \times r_{cs_i})$ are less than 0.01.

It can be seen from Equations (2-1) and (2-2) that, once the frequency and duration of the various cut-sets are known, the load point interruption frequency and duration can be easily computed. Since the various cut-set events are not mutually exclusive, Equation (2-1) is an upper bound on the frequency of system failure. Assuming, however, that the time a component spends on outage is very small compared to the time it is operating satisfactorily, Equations (2-1) and (2-2) give results close to the exact values. A later section gives equations for computing the frequency and duration for various types of outage events.

### 2.1.10 Component failure modes

Distribution system components, such as lines, transformers, and circuit breakers, are subject to a variety of failure modes that, in general, have different impacts on system reliability performance. For system reliability evaluation purposes, it is useful to categorize system components as switching devices or nonswitching devices. First, consider nonswitching devices such as lines or transformers. The important modes of failure are those events that cause the component to be unable to fulfill its current-carrying function, generally due to a fault and subsequent isolation of the faulted component by a protective device. Such failure modes can be modeled in system reliability calculations through the use of permanent forced outage rates and transient forced outage rates, where

$\lambda$ is the permanent forced outage rate of the component = rate of occurrence of forced outages in which the component is damaged and cannot be restored to service until repair or replacement has been completed; and

$\lambda'$ is the transient forced outage rate of component = rate of occurrence of forced outages in which the component is undamaged and can be immediately restored to service.

NOTE—A forced outage is defined as “an outage (failure) that cannot be deferred.”

Now consider the failure modes of protection systems and of switching devices, such as circuit breakers. In contrast to the components described above whose only function is carrying current (a continuously required function), protection systems and switching devices generally have both continuously required and response functions. The inability to perform a continuously required function, such as current carrying, will immediately impact system performance while the inability to perform a response function, such as tripping open on command, will be manifested only when the response is required.

Copyright © 1998 IEEE. All rights reserved.

Some of the more important failure modes of protection systems and switching devices, and the parameters used to model these failure modes in reliability calculations are summarized as follows:

#### 2.1.10.1 Continuous functions

a) Component short circuit resulting in operation of backup protective devices. The modeling parameter is λ, which is the rate of occurrence of such short-circuit events.
b) Switching device opening without the proper command. The modeling parameter is $\lambda_{FT}$, which is the rate of occurrence of such events given that the device is closed.
c) Switching device closing without the proper command. The modeling parameter is $\lambda_{FC}$, which is the rate of occurrence of such events given that the device is open.

#### 2.1.10.2 Response functions

a) Switching device failure to open on command. The modeling parameter is $p_s$, which is the probability that the device will not open on command.
b) Switching device failure to close on command. The modeling parameter is $p_c$, which is the probability that the device will not close on command.
c) Protection system trips incorrectly due to a fault outside of the protection zone. The modeling parameter is $p_o$, which is the probability of an incorrect trip, given a fault outside the protection zone.

### 2.1.11 Expressions for outage events

Expressions for computing the frequency, $f_{cs}$, and the expected durations, $r_{cs}$, of a cut-set event are summarized in this subclause. These expressions are generally approximate, but are sufficiently accurate for practical calculations in typical situations. The given expressions presume that all physically parallel paths in a distribution system are fully redundant; that is, it is presumed that any one path of a parallel set is fully capable of carrying the highest load that may be experienced. Further, the failure bunching effects of storms and other common-mode or common-cause failures are not considered in the given expressions. These issues are fully described elsewhere (see Billinton and Allan [B2] and Endrenyi [B9]) and are usually not numerically important in industrial and commercial distribution systems whose reliability performance is dominated by series components that yield first-order cut-sets.

#### 2.1.11.1 Forced outages of current-carrying components

Now the events of cessation of the continuous current-carrying function of any component will be considered. The following notations are used:

$f_{cs}$ is the frequency of cut-set event;

$r_{cs}$ is the expected duration of the cut-set event = expected duration of system failure event due to occurrence of the cut-set event;

$\lambda_i$ is the permanent forced outage rate of component i;

$\lambda'_i$ is the transient forced outage rate of component i;

 Copyright © 1998 IEEE. All rights reserved.

$r_i$ is the expected repair or replacement time of component i; and
$t$ is the time to perform an appropriate switching operation.

First, consider cut-sets associated with permanent forced outages.

First-Order (single-component) cut-sets:

$$f_{cs} = \lambda_i \quad (2\text{-}3)$$

$$r_{cs} = \min (r_i, t) = \text{Minimum of } r_i \text{ or } t \quad (2\text{-}4)$$

Second-Order (dual-component) cut-sets:

$$f_{cs} = \lambda_i \lambda_j (r_i + r_j) \quad (2\text{-}5)$$

$$r_{cs} = \min (r_i r_j / (r_i + r_j), t) \quad (2\text{-}6)$$

NOTE—Equations (2-5) and (2-6) are approximate formulas and should only be used when both ($\lambda_i \times r_i$) and ($\lambda_j \times r_j$) are less than 0.01.

Note that the above expressions for $f_{cs}$ are approximate and assume that $\lambda$ is much less than $1/r$. This is usually a reasonable assumption, but exact expressions are given in Chapter 8 and should be used if needed. Also note that, particularly in the above expressions for $r_{cs}$, system interruption durations may be determined by component repair or replacement times or by the time to restore service to interrupted loads through a switching operation. Thus, $r_{cs}$ is very much a function of system topology and switching arrangements. It should also be noted that $f_{cs}$ for second-order cut-sets may, in certain circumstances, also be a function of switching times rather than repair and replacement times. In such cases, the times $r_i$ and $r_j$ should be viewed as the appropriate switching times.

Next, consider cut-sets associated with transient forced outages or transient forced outage events overlapping permanent forced outage events. The likelihood of overlapping transient forced outages is considered remote and is not discussed in this book.

First-Order (single-component) cut-set:

$$f_{cs} = \lambda'_i \quad (2\text{-}7)$$

$$r_{cs} = t \quad (2\text{-}8)$$

Second-Order (dual-component) cut-sets:

$$f_{cs} = \lambda_j \lambda'_i r_j \quad (2\text{-}9)$$

$$r_{cs} = t \quad (2\text{-}10)$$

NOTE—Equation (2-9) is an approximate formula and should only be used when ($\lambda_j \times r_j$) are less than 0.01.

Copyright © 1998 IEEE. All rights reserved.

### 2.1.11.2 Failures of switching devices or protection systems

Now consider failure events of switching devices or protection systems. The frequency and duration of cut-set events associated with the short-circuit failure mode of switching devices can be calculated using Equations (2-3) through (2-10) as appropriate. Similarly, if a switching device is normally operated closed, the effects of false trip events having a rate of $\lambda_{FT}$ can be calculated using the approaches of Equations (2-3) through (2-10). The event of switching device closure without proper command is not generally viewed as important from a distribution system reliability point of view (though it certainly is important from a safety viewpoint) and will not be treated in this book.

Switching device or protection system failures that render the device or system unable to respond properly to some other event may occur at the instant of required action or more probably represent undetected prior failures. Such latent failures are only revealed by the event calling for the device or system action. It follows, therefore, that response function failures of switching devices or protection systems never constitute first-order cut-sets since such failures do not in and of themselves result in load interruptions. Expressions for $f_{cs}$ and $r_{cs}$ for each of the response function failure modes appear in Equations (2-11) through (2-20). In these expressions, $\lambda$ is the rate of occurrence of the event requiring a response.

Failure to open on command:

$$f_{cs} = \lambda p_s \tag{2-11}$$

$$r_{cs} = r \text{ or } t \text{ as appropriate} \tag{2-12}$$

Failure to close on command:

$$f_{cs} = \lambda p_c \tag{2-13}$$

$$r_{cs} = r \text{ or } t \text{ as appropriate} \tag{2-14}$$

Incorrect trip due to fault outside protection zone:

$$f_{cs} = \lambda p_o \tag{2-15}$$

$$r_{cs} = r \text{ or } t \text{ as appropriate} \tag{2-16}$$

The probabilities $p_s$ and $p_c$ are very much influenced by inspection, maintenance, and testing policies. This follows, since $p_s$ and $p_c$ largely reflect undetected prior failures at the time of a required response.

### 2.1.11.3 Scheduled outage of components

System interruptions and their related cut-sets will now be considered, which are associated with scheduled outages of components. A scheduled outage is defined as “an outage that results when a component is deliberately taken out of service at a selected time, usually for

 Copyright © 1998 IEEE. All rights reserved.

purposes of construction, maintenance, or repair." The distinction between a forced outage and a scheduled outage is the degree to which the outage can be postponed; a forced outage cannot be postponed, while a scheduled outage can be postponed, if necessary, to avoid consumer interruptions. Clearly, a scheduled outage of a component that constitutes a first-order cut-set will result in a consumer interruption regardless of the degree to which it can be postponed. However, the timing of such an outage is entirely controllable and can, therefore, be taken at times of minimum inconvenience and with forewarning. Therefore, such interruptions may not have the same impact as interruptions that occur at a random time and without warning. The frequency and duration of first-order cut-sets associated with scheduled outages are

$$f_{cs} = \lambda''_{\mathrm{i}} \tag{2-17}$$

$$r_{cs} = r''_{\mathrm{i}} \tag{2-18}$$

where $\lambda''_i$ and $r''_i$ are the scheduled outage rate and average scheduled outage duration of the *i*th component.

In systems possessing redundant supply paths, consumer interruption should never occur due to overlapping scheduled outages of components. However, a component forced outage may overlap a preexisting component scheduled outage, thereby producing a consumer interruption and a second-order cut-set. The frequency and duration of a cut-set in which a forced outage of component *j* overlaps a scheduled outage of component *i* are given as follows:

$$f_{cs} = \lambda''_i \lambda'_j r''_i \tag{2-19}$$

$$r_{cs} = \frac{r''_i r_j}{r''_i + r_j} \quad \text{or } t \text{ as appropriate} \tag{2-20}$$

Again, the assumption is that $\lambda$ is much greater than $1/r$.

### 2.1.12 Example

A simple example will now be used to illustrate the application of the reliability evaluation concepts that have been presented to the evaluation of alternative system protection and sectionalizing schemes. The alternative cases to be studied are shown in Figures 2-1, 2-2, and 2-3. More detailed examples using typical data are given in Chapter 7. In these examples, only the labeled line sections and circuit breakers or switches are considered fallible. Furthermore, in the interest of simplifying the example, scheduled outages and transient forced outages of components are not considered. Assumed numerical data for the example systems is shown in Table 2-1. In every case, the reliability performance indexes desired are the interruption rate and expected duration that would be experienced by a load served from line section $L_1$.

Here an interruption is defined to be "the loss of continuity from the source to the load point for a time longer than that required for an automatic or remotely controlled switching operation."

Copyright © 1998 IEEE. All rights reserved.

**Table 2-1—Data for example systems**

| |
|---|
| Line sections<br>$\lambda$ = 0.20/yr<br>$r$ = 3 h |
| Breakers and switches<br>$\lambda$ = 0.01/yr<br>$\lambda_{FT}$ = 0.003/yr<br>$p_s$ = 0.001<br>$p_o$ = 0.01<br>$r$ = 5 h |
| Switching times<br>$t_s$ = Normal manual switching time = 0.5 h<br>$t_B$ = Time to isolate breaker or switch or to repair noncatastrophic failure = 1 h |

The analysis of each system is shown in the tables within Figures 2-1, 2-2, and 2-3 (Cases 1, 2, and 3). In the analysis, it is assumed that breakers are operated automatically or remotely, while switches are operated manually. The results of the analyses are in agreement with intuition:

— Sectionalizing circuits with noninterrupting devices reduces average interruption duration but has a minimal effect on the interruption rate.

— Sectionalizing circuits with fault-interrupting devices cuts the interruption rate.

Note, however, that the average interruption duration of Case 3 is close to that of Case 1 and higher than that of Case 2. This points out that $f_s$ and $r_s$ may not move in the same direction as changes are made in the protection scheme, and that the indexes $f_s$ and $r_s$ should be viewed as a complementary pair in reliability analysis.

### 2.1.13 Incomplete redundancy

A common method of improving the reliability performance of a system is through component redundancy, for example, more than one transformer in a substation. Typically, each component of the redundant set has sufficient capacity, perhaps based on an emergency rating, to carry the peak load that the system may be asked to deliver. Such full redundancy is effective in improving system reliability performance but is usually quite expensive. If the load of the system is variable, the opportunity exists to cut costs by reducing the capacity of redundant components to levels less than that required to carry system peak load and where they would thereby suffer an overload. An overload might result in an actual interruption of load or perhaps only some loss of life in the overloaded component, depending on the protection scheme in service.

 Copyright © 1998 IEEE. All rights reserved.

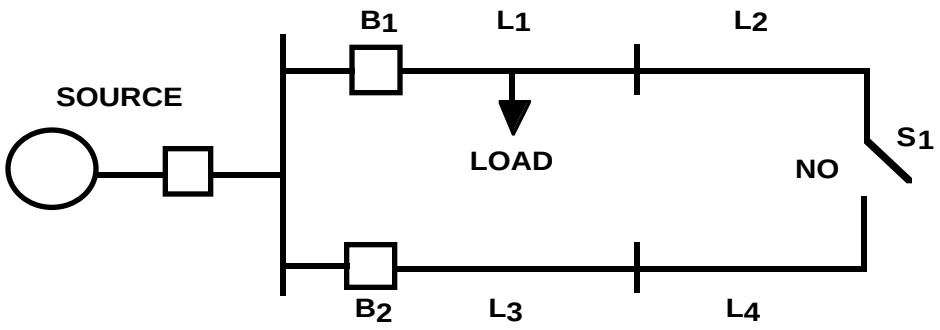


| Cut-Set | (1) Frequency (failures/yr) | (2) Duration (h/failure) | (1) × (2) |
|---|---|---|---|
| Line Failures | | | |
| $L_1$ | $\lambda = 0.20$ | r = 3 | $0.20 \times 3$ |
| $L_2$ | $\lambda = 0.20$ | r = 3 | $0.20 \times 3$ |
| Breaker/Switch Failures | | | |
| Type 1: $B_1$ | $\lambda = 0.01$ | $t_B = 1$ | $0.01 \times 1$ |
| Type 1: $B_2$ | $\lambda = 0.01$ | $t_B = 1$ | $0.01 \times 1$ |
| Type 1: $S_1$ | $\lambda = 0.01$ | $t_B = 1$ | $0.01 \times 1$ |
| Type 2: $B_1$ | $\lambda_{FT} = 0.003$ | $t_B = 1$ | $0.003 \times 1$ |
| | $\sum = 0.433$ | | $\sum = 1.233$ |

where
$f_s$ = 0.433 interruptions/yr
$r_s$ = 1.233/0.433 = 2.85 h/interruption

**Figure 2-1—Example system—no line sectionalizing**

A method exists (see Ayoub and Patton [B1] and Christiaanse [B6]) for computing the frequency, average duration, and probability of overload outage events as a function of component capacities and load characteristics. This method, which is compatible with the general reliability evaluation procedure outlined earlier, can be used to evaluate the cost/reliability tradeoffs of incomplete redundancy. The method is briefly presented hereafter.

Consider a system possessing incomplete redundancy, and consider the forced outage of some set *i* of the components of this system. Let the frequency and probability of this forced outage event be $f_i$ and $P_i$. Then the frequency, probability, and average duration of overloading events that are precipitated by loss of the components in set *i* are given approximately by

Copyright © 1998 IEEE. All rights reserved.

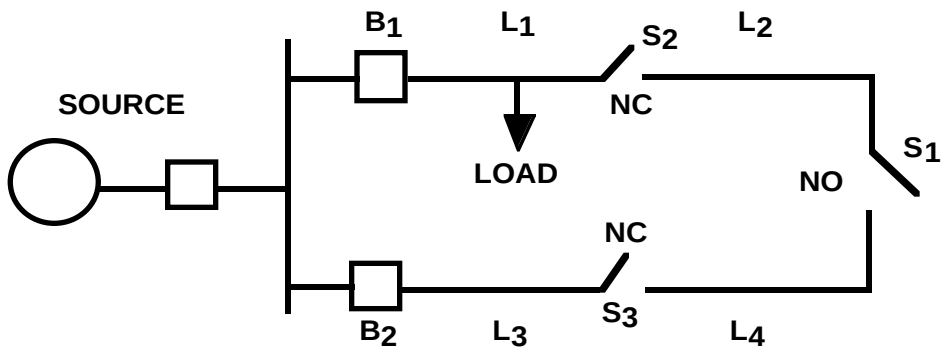


| Cut-Set | (1) Frequency (failures/yr) | (2) Duration (h/failure) | (1) × (2) |
|---|---|---|---|
| Line Failures | | | |
| $L_1$ | $\lambda = 0.20$ | r = 3 | $0.20 \times 3$ |
| $L_2$ | $\lambda = 0.20$ | r = 0.5 | $0.20 \times 0.5$ |
| Breaker/Switch Failures | | | |
| Type 1: $B_1$ | $\lambda = 0.01$ | $t_B = 1$ | $0.01 \times 1$ |
| Type 1: $B_2$ | $\lambda = 0.01$ | $t_B = 1$ | $0.01 \times 1$ |
| Type 1: $S_1$ | $\lambda = 0.01$ | $t_B = 1$ | $0.01 \times 1$ |
| Type 1: $S_2$ | $\lambda = 0.01$ | $t_B = 1$ | $0.01 \times 1$ |
| Type 2: $B_1$ | $\lambda_{FT} = 0.003$ | $t_B = 1$ | $0.003 \times 1$ |
| Type 4: $B_2$ | $p_s(\lambda_{L_3} + \lambda_{L_4} + \lambda_{S_3}) = 0.0041$ | $t_B = 1$ | $0.00041 \times 1$ |
| | $\sum = 0.44341$ | | $\sum = 0.74341$ |

where
$f_s$ = 0.44341 interruptions/yr
$r_s$ = 0.74341/0.43341 = 1.68 h/interruption

**Figure 2-2—Example system—line sectionalized with switches**

$$f_{OL_i} = f_i \times P \text{ (load} \geq \text{capacity of remaining components)} + P_i \times f \text{ (load} \geq \text{capacity of remaining components)}$$

$$P_{OL_i} = P_i \times P \text{ (load} \geq \text{capacity of remaining components)}$$

$$D_{OL_i} = P_{OL} / f_{OL_i}$$


Copyright © 1998 IEEE. All rights reserved.

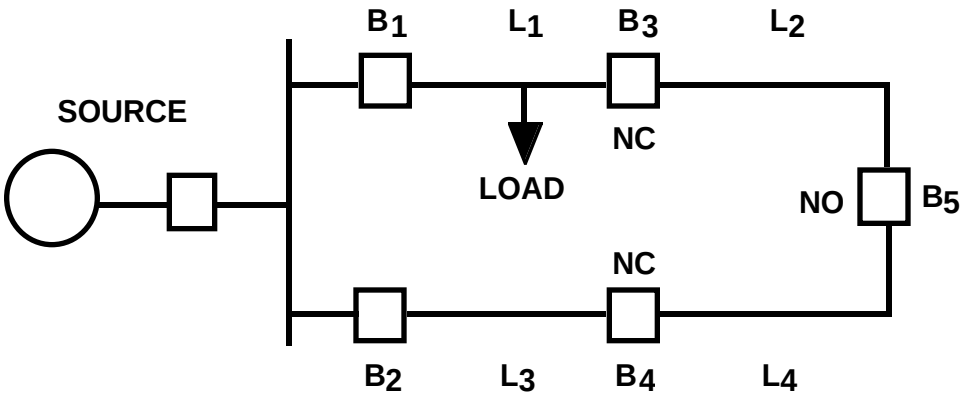


| Cut-Set | (1) Frequency (failures/yr) | (2) Duration (h/failure) | (1) × (2) |
|---|---|---|---|
| Line Failures | | | |
| $L_1$ | $\lambda = 0.20$ | r = 3 | $0.20 \times 3$ |
| $L_2$ | $\lambda = 0.20$ | r = 0.5 | $0.20 \times 0.5$ |
| Breaker/Switch Failures | | | |
| Type 1: $B_1$ | $\lambda = 0.01$ | $t_B = 1$ | $0.01 \times 1$ |
| Type 1: $B_2$ | $\lambda = 0.01$ | $t_B = 1$ | $0.01 \times 1$ |
| Type 1: $B_3$ | $\lambda = 0.01$ | $t_B = 1$ | $0.01 \times 1$ |
| Type 2: $B_1$ | $\lambda_{FT} = 0.003$ | $t_B = 1$ | $0.003 \times 1$ |
| Type 4: $B_3$ | $p_s(\lambda_{L_2} + \lambda_{B_5}) = 0.00021$ | $t_B = 1$ | $0.00021 \times 1$ |
| Type 4: $B_2$ | $p_s(\lambda_{L_3} + \lambda_{B_4}) = 0.00021$<br>$p_o(\lambda_{L_2} + \lambda_{B_5}) = 0.0021$ | $t_B = 1$ | $0.00021 \times 1$ |
| Type 6: $B_1$ | | $t_B = 1$ | $0.0021 \times 1$ |
| | $\Sigma = 0.23552$ | | $\Sigma = 0.63552$ |

where
$f_s$ = 0.23552 interruptions/yr
$r_s$ = 0.63552/0.433 = 2.70 h/interruption

**Figure 2-3—Example system—lines sectionalized with circuit breakers**

Copyright © 1998 IEEE. All rights reserved.

In the above expressions, $P$ (load $\geq X$) is called the *load-duration characteristic* and is simply the probability or proportion of time that the load is greater than or equal to $X$. A typical load-duration characteristic for a utility load is shown in Figure 2-4. Similary, $f$ (load $\geq X$) is called the "load-frequency characteristic" and is the rate with which events (load $\geq X$) occur. A typical load-frequency characteristic is shown in Figure 2-5. The reader is referred to (Ayoub and Patton [B1]) for additional discussion of the load-duration and load-frequency characteristics.

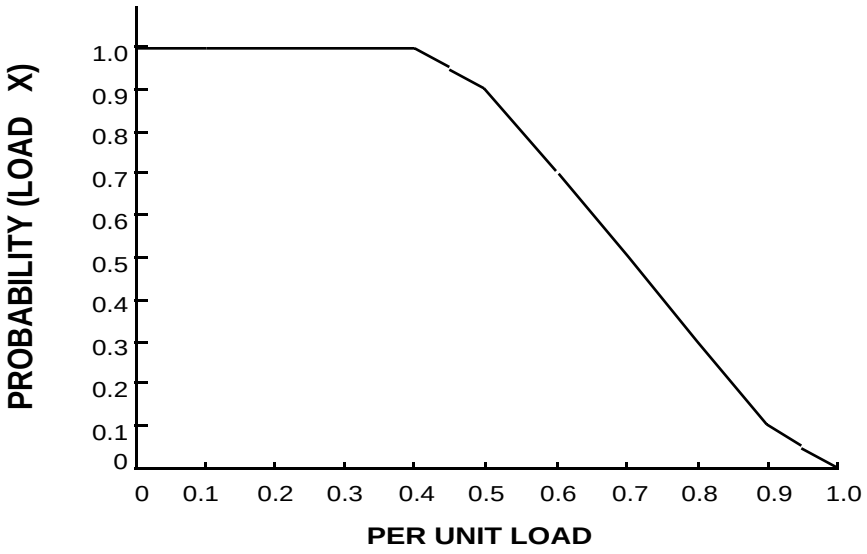


**Figure 2-4—Typical load-duration characteristic**

## 2.2 Costs of interruptions—economic evaluation of reliability

### 2.2.1 Cost of interruptions vs. capital cost

The type and extent of new or rehabilitated electric systems for industrial plants or commercial buildings must carefully balance the costs of anticipated interruptions to electrical service against the capital costs of the systems involved. Each instance requires a separate analysis taking into account special production and occupancy needs. Because of the many variables involved, one of the most difficult items to obtain is the cost of the electrical interruptions.

#### 2.2.1.1 What is an interruption?

Economic evaluation of reliability begins with the establishment of an interruption definition. Such a definition specifies the magnitude of the voltage sag and the minimum duration of such a reduced-voltage that result in a loss of production or other function for the plant,

 Copyright © 1998 IEEE. All rights reserved.

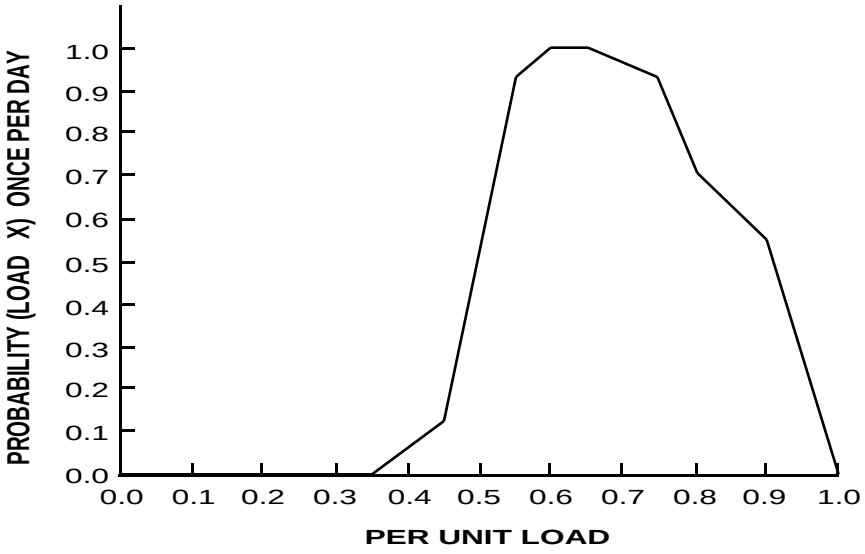


**Figure 2-5—Typical load-frequency characteristic**

process, or building in question. Frequently, interruption definitions are given only in terms of a minimum duration and assume that the voltage is zero during that period.

IEEE surveys (see IEEE Committee Reports [B15], [B16], and Patton [B20]) have revealed a wide variation in the minimum or critical service loss duration. Table 2-2 summarizes results for industrial plants, and Table 2-3 gives results for commercial buildings. It is clear from these tables that careful attention must be paid to choosing the proper interruption definition in any specific reliability evaluation.

**Table 2-2—Critical service loss duration for industrial plants[a]**

(Maximum length of time an interruption of electrical service that will not stop plant production.)

| 25th percentile | Median | 75th percentile | Average plant outage time for equipment failure between 1- and 10-cycle duration |
|---|---|---|---|
| 10 cycles | 10 s | 15 min | 1.39 h |

[a]Fifty-five plants in the United States and Canada reporting; all industry.

Another important consideration in the economic evaluation of reliability is the time required to restart a plant or process following a power interruption. An IEEE survey (see IEEE Committee Report [B15] and Table 2-4) indicates that industrial plant restart time following a

Copyright © 1998 IEEE. All rights reserved.

**Table 2-3—Critical service loss duration for commercial buildings[a]**

(Maximum length of time before an interruption to electrical service is considered critical.)

| Service loss duration time | | | | | | | |
|---|---|---|---|---|---|---|---|
| **1 cycle (%)** | **2 cycles (%)** | **8 cycles (%)** | **1 s (%)** | **5 min (%)** | **30 min (%)** | **1 h (%)** | **12 h (%)** |
| 3 | 6 | 9 | 15 | 36 | 64 | 74 | 100 |

[a]Fifty-four buildings reporting; percentage of buildings with critical service loss for duration less than or equal to time indicated.

**Table 2-4—Plant restart time[a]**

(After service is restored following a failure that has caused a complete plant shutdown.)

| Average (h) | Median (h) |
|---|---|
| 17.4 | 4.0 |

[a]Forty-three plants in the United States and Canada reporting: all industry.

complete plant shut-down due to a power interruption averages 17.4 h. The median plant restart time was found to be 4.0 h. Clearly, specific data on plant or process restart time should be used if possible in any particular evaluation.

Many industrial plants reported that 1 to 10 cycles were considered critical interruption time, as compared to 1.39 h, required for startup (plant outage time being considered equal to plant startup time). This indicates that the critical factor must be carefully explored prior to assigning a cost to the interruption. That 15% of the commercial buildings reported the critical service loss duration time to be 1 s or less can probably be attributed to the fact that computer installations were involved.

Further data from IEEE Committee Report [B15] graphically illustrates the time required to start an industrial plant after an interruption.

The first step of the cost analysis thus becomes the selection of the critical duration time of the outage and the plant startup time, including equipment repair or replacement time required because of the interruption.

### 2.2.1.2 Cost of an electrical service interruption

With the establishment of expected downtime per interruption, costs are assigned to all individual items involved, including but not limited to

 Copyright © 1998 IEEE. All rights reserved.

— Value of lost production time less expenses saved (expected restart time is used along with the repair or replacement time)
— Damaged plant equipment
— Spoiled or off-specification product
— Extra maintenance costs
— Cost for repair of failed component

If possible, the cost for each interruption of service should be expressed in dollars for a short interruption plus an amount of dollars per hour for the total outage time in order to utilize the reliability data and analysis presented.

#### 2.2.1.3 Economic evaluation of reliability

There are many methods of varying degrees of complexity for accomplishing economic evaluations. For quick *order of magnitude* or *Is it worth further investigation?* types of evaluations, cost data from IEEE Committee Report [B15] and Patton [B20] can be used. Caution must be exercised, however, since these data are very general in nature, and wide variations are possible in individual cases. Some of the more commonly accepted methods for economic analyses are

— Revenue requirements (RR)
— Return on investment (ROI)
— Life cycle costing (LCC)

It is not the intent to stipulate here the method to be used nor the depth to which each analysis is to be made. These are considered to be the prerogative of the engineer and will depend heavily on management choice and the time available for the analysis. The RR method is given in this chapter as an example.

### 2.2.2 “Order of magnitude” cost of interruptions

IEEE surveys (see Dickinson [B8], IEEE Committee Report [B14], and Patton [B20]) presented general data on the cost of interruptions to industrial plants and commercial buildings in the United States and Canada. Additional cost of interruption data is presented in various IEEE-IAS and IEEE-PES publications. Recent data collected by a U.S. electric utility is given in (Sullivan [B23]). Other data are listed in Billinton and Wacker [B4], Billinton et al., [B5], Goushleff [B12], and Koval and Billinton [B18] and are primarily for areas in the middle of Canada and the Province of Ontario. The reader is again cautioned that such general data should be used only for “order of magnitude” evaluations where data specific to the system being studied is not available. A review of the reliability data can probably best be used in selecting the type of utility company service that should be provided.

The costs based on the kilowatts interrupted and the kilowatts-hours not delivered to industrial plants are presented in Tables 2-5 and 2-6.

Interruption costs based on kilowatts-hours not delivered and reflecting the relationship to duration of interruptions for commercial buildings are presented in the Tables 2-7 and 2-8.

Copyright © 1998 IEEE. All rights reserved.

**Table 2-5—Average cost of power interruptions for industrial plants[a]**

| | |
|---|---|
| All plants | $6.43/kW + $9.11/kWh |
| Plants > 1000 kW max demand | $3.57/kW + $3.20/kWh |
| Plants < 1000 kW max demand | $15.61 / kW + $27.57/kWh |

[a]Forty-one plants in the United States and Canada reporting (published in 1973, with costs updated to July 1996).

**Table 2-6—Median cost of power interruptions for industrial plants[a]**

| | |
|---|---|
| All plants | $2.35/kW + $2.82/kWh |
| Plants > 1000 kW max demand | $1.09/kW + $1.22/kWh |
| Plants < 1000 kW max demand | $12.51/kW + $15.03/kWh |

[a]Forty-one plants in the United States and Canada reporting (published in 1973, with costs updated to July 1996).

**Table 2-7—Average cost of power interruptions for commercial buildings**

| | |
|---|---|
| All commercial buildings[a] | $21.77/kWh not delivered |
| Office buildings only | $26.76/kWh not delivered |

[a]Fifty-four buildings in the United States reporting (published in 1975, with costs updated to July 1996).

**Table 2-8—Cost of power interruptions as a function of duration for office buildings (with computers)[a]**

| Power interruptions | Sample size | Cost/Peak kWh not delivered | | |
|---|---|---|---|---|
| | | Maximum | Minimum | Average |
| 15 min duration | 14 | $67.10 | $5.68 | $26.85 |
| 1 h duration | 16 | $75.29 | $5.68 | $25.07 |
| Duration > 1 h | 10 | $204.33 | $0.48 | $29.63 |

[a]Published in 1975 with costs updated to July 1996.


Copyright © 1998 IEEE. All rights reserved.

Interruption costs as they are related to interruption time from Table 2-7 and from (Koval and Billinton [B18]) are graphically represented in Figure 2-6. Small industrials are considered to be those with a maximum demand of less than 1000 kW and large industrials are considered to be those with a demand of 1000 kW or more.

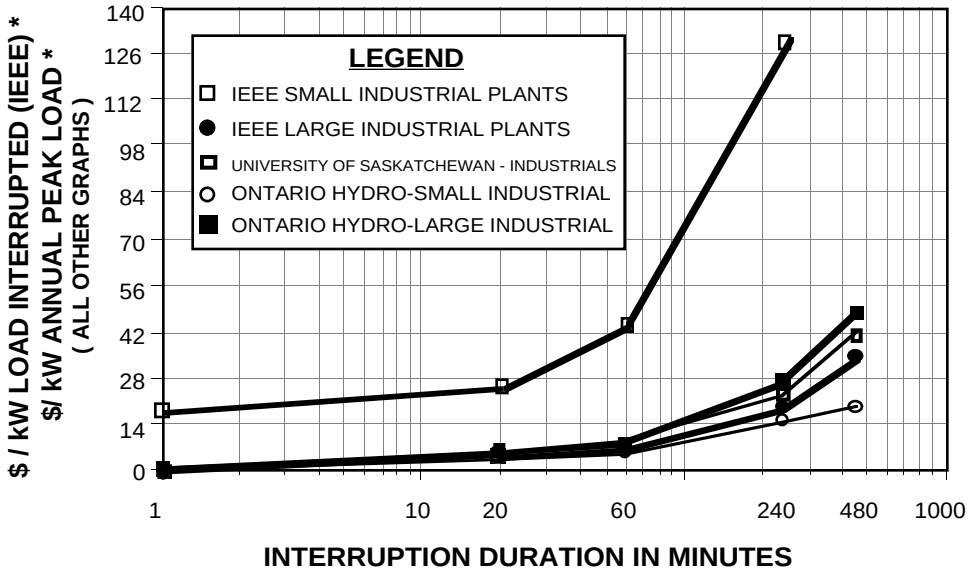


**Figure 2-6—Cost of interruptions versus duration (adjusted to July 1996 value)**

### 2.2.3 Economic analysis of reliability in electrical systems

There are several acceptable methods for accomplishing an economic analysis of the reliability in electric systems. The examples of reliability analysis included in this chapter and Chapter 7 utilize the RR method. The application of this method as it applied to the analyses of the reliability in industrial plant electrical systems was presented in part 6 of Dickinson [B8]. Applicable excerpts from that reference are included herein.

#### 2.2.3.1 The RR method

Although there are many ways in use to compare alternatives, some of these have defects and weaknesses, especially when comparing design alternatives in contrast to overall projects. The RR method is “mathematically rigorous and quantitatively correct to the extent permitted by accuracy with which items of cost can be forecast” (see Dickinson [B8] and Jeynes and Van Nemwegen [B17]).

Copyright © 1998 IEEE. All rights reserved.

The essence of the RR method is that for each alternative plan being considered, the minimum revenue requirements (MRR) are determined. This reveals the amount of product needed to be sold to achieve minimum acceptable earnings on the investment involved plus all expenses associated with that investment. These minimum revenue requirements for alternative plans may be compared directly. The plan having the lowest MRR is the economic choice.

MRR are made up of and equal to the summation of

a) Variable operating expenses
b) Minimum acceptable earnings
c) Depreciation
d) Income taxes
e) Fixed operating expenses

These MRR may be separated into two main parts, one proportional and the other not proportional to investment in the alternative. This may be expressed in an equation

$$G = X + CF \tag{2-21}$$

where

$G$ is the MRR to achieve minimum acceptable earnings;
$X$ is the nonfixed or variable operating expenses;
$C$ is the capital investment; and
$F$ is the fixed investment charge factor.

The last term in Equation (2-21), the product of $C$ and $F$ includes the items b), c), d), and e) listed in the preceding paragraph. Equation (2-21) is now discussed.

$X$ (variable expenses)—The effect of the failure of a component is to cause an increase in variable expenses. How serious this increase is depends to a great extent on the location of the component in the system and on the type of power distribution system employed. The quality of a component as installed can have a significant effect on the number of failures experienced. A poor quality component installed with poor workmanship and with poor application engineering may greatly increase the number of failures that occur as compared with a high quality component installed with excellent workmanship and sound application engineering.

When a failure does occur, variable expenses are increased in two ways. In the first way, the increase is the result of the failure itself. In the second way, the increase is proportional to the duration of the failure.

Considering the first way, the increased expense due to the failure includes the following:

— Damaged plant equipment
— Spoiled or off-specification product
— Extra maintenance costs

 Copyright © 1998 IEEE. All rights reserved.

— Costs for repair of the failed component

Considering the second way, plant downtime resulting from failures is made up of the time required to restart the plant, if necessary, plus the time to

— Effect repairs, if it is a radial system, or
— Effect a transfer from the source on which the failure occurred to an energized source

During plant downtime, production is lost. This lost production is not available for sale, so revenues are lost. However, during plant downtime, some expenses may be saved, such as expenses for material, labor, power, and fuel costs. Therefore, the value of the lost production is the revenues lost because production stopped less the expenses saved. Some of the variable expenses may vary depending on the duration of plant downtime. For example, if plant downtime is only 1 h, perhaps no labor costs are saved. But, if plant downtime exceeds 8 h, labor costs may be saved.

If it is assumed that the value/hour of variable expenses does not vary with the duration of plant downtime, then the value of lost production can be expressed on a per hour basis, and the total value of lost production is the product of plant downtime in hours and the value of lost production per hour.

It should be noted that both the value of lost production and expenses incurred are proportional to the failure rate. The total effect on variable expenses, if the value of lost production is a constant on a per hourly basis, may be expressed in an equation

$$X = \lambda \left[ x_i + (g_p - x_p)\,(r + s) \right] \tag{2-22}$$

where

$X$ is the variable expenses ($ per year);
$\lambda$ is the failures per year or failure rate;
$x_i$ is the extra expenses incurred per failure ($ per failure);
$g_p$ is the revenues lost per hour of plant downtime ($ per hour);
$x_p$ is the variable expenses saved per hour of plant downtime ($ per hour);
$r$ is the repair or replacement time after a failure (or transfer time if not radial system); in hours; and
$s$ is the plant startup time after a failure, in hours.

Assume that

$\lambda$ is the 0.1 failure per year;
$x_i$ is the $55 000 per failure, extra expenses incurred;
$g_p$ is the $22 000 per hour, revenues lost;
$x_p$ is the $16 000 per hour, expenses saved;
$r$ is the 10 h per failure; and
$s$ is the 20 h per failure.

Copyright © 1998 IEEE. All rights reserved.

Then, variable expenses affected would be

$X$ = (0.1)[$55 000 + ($22 000 – $16 000)(10 + 20)] = $23 500 per year

The term $g_p$ represents revenues lost and it is not really an expense. However, it is a negative revenue, and as such, has the same effect on the economics as a positive expense item. It is convenient to treat it as though it were an expense.

A failure rate of 0.1 failure per year is equivalent to a mean time between failures of 10 years. These results can be expected since this is probability, but in a specific case, there might be two failures in one 10-year period and no failures in another 10-year period. But considering many similar cases, it is expected to have an average of 0.1 failure per year, with each failure costing an average of $235 000. This gives an equal average amount per year in the above example of $23 500.

The point is that even though the actual failures cost $235 000 each and occur once every 10 years, a given failure is just as likely to occur in any of the 10 years. The equivalent equal annual amount of $23 500 per year is the average value of one failure in 10 years.

*C* (Investment)—Each different alternative in an industrial plant power distribution system involves different investments. The system requiring the least investment will usually be some form of radial system. By varying the type of construction and the quality of the components in the system, the investment in radial systems can vary widely.

The best method is to find one total investment in each alternative plan. Another common method is to find the incremental investment in all alternatives over a base or least expensive plan. The main reason that the total investment method is preferable, is that in comparing alternatives, the investment is multiplied by an *F* factor (which will be explained later). This factor is usually the same for alternative plans of the sort being considered here, but this is not necessarily the case.

Using the incremental investment may thus introduce a slight error into the economic comparisons.

*F* (Investment Charge Factor)—This discussion of investment charge factor is taken from Dickinson [B8].

The factor *F* includes the following items, which are constant in relation to the investment:

a) Minimum acceptable rate of return on investment, allowing for risk
b) Income taxes
c) Depreciation
d) Fixed expenses

 Copyright © 1998 IEEE. All rights reserved.

An equation to calculate the *F* factor is

$$F = \frac{[(S_c a_L / f_r) - t\bar{d}_t]}{1 - t} + e \quad (2\text{-}23)$$

This may also take the following form:

$$F = \bar{r} + \bar{d} + \dot{t} + e \quad (2\text{-}24)$$

where

$a_n$ is $R + d_n$, amortization factor or leveling factor;
$d_n$ is $R/(S_n - 1)$, sinking fund factor;
$S_n$ is the $(1 + R)^n$, growth factor or future value factor;
$n$ is the period of years, such as $c$ or $L$;
$c$ is the years prior to startup that an investment is made;
$L$ is the life of investment years;
$R$ is the minimum acceptable earnings per $ of $C$ (investment);
$f_r$ is the probability of success or risk adjustment factor;
$t$ is the income taxes per $ of $C$ (investment);
$\bar{d}_t$ is the income tax depreciation, levelized per $ of $C$ (investment) = $1/L$, $\therefore \bar{d}_t = 1L$;
$e$ is the fixed expenses per $ of $C$ (investment);
$\bar{r}$ is the levelized return on investment per $ of $C$ (investment);
$\bar{d}$ is the levelized depreciation on investment per $ of $C$ (investment); and
$\dot{t}$ is the levelized income taxes on investment per $ of $C$ (investment).

Assume

$L$ to be twenty years, life of the investment;
$c$ to be one year;
$R$ to be 0.15, minimum acceptable rate of return;
$f_r$ to be 1, risk adjustment factor;
$t$ to be 0.5, income tax rate;
$\bar{d}_t$ to be $1/L = 0.05$; and
$e$ to be 0.0825.

then

$S_c$ is $(1 + R)^c = (1 + 0.15)^1 = 1.15$;
$S_L$ is $(1 + R)^L = (1 + 0.15)^{20} = 16.37$;
$d_L$ is $R/(S_L - 1) = 0.15/(16.37 - 1) = 0.0.0098$; and
$a_L$ is $R + d_L = 0.15 + 0.0098 = 0.1598$.

Copyright © 1998 IEEE. All rights reserved.

Substituting into Equation 2-23 to calculate the *F* factor, results in

$$F = \left[ \frac{\frac{(1.15)(0.1598)}{1.0} - (0.5)(0.05)}{(1 - 0.5)} \right] + 0.0825 = 0.04 \quad (2\text{-}25)$$

All the assumed values are believed to be typical for the average electric distribution system, except the value of $e = 0.0825$. This latter value was arbitrarily assumed to make *R* round out to 0.4. The term *e* covers such items as insurance, property taxes, and fixed maintenance costs. A typical value is probably less than 0.0825.

It is believed that a typical value for minimum acceptable return on investment in many industrial plants is 15%, that is, $R = 0.15$. The company average rate of return, based on either past history or anticipated results, is a measure of what *R* should be. In plants of higher risk than the average, the risk adjustment factor, $f_r$, should probably be less than 1. However, company management determines what the value of *R* should be.

The value of *F* can be calculated from Equation (2-23). In (Dickinson [B7]), tabular values are given for the factors $S_n$ and $a_n$ for various rates of return and plant lives.

#### 2.2.3.2 Steps for economic comparisons

a) Prepare single-line diagrams of alternative plans and assign failure rates, repair times, and investment in each component, and determine the total investment *C* in each plan.
b) Determine *X*, the increased variable expense for each plan as the sum of the value of lost production and the extra variable expenses incurred.
c) Determine *F*, the fixed investment charge factor *F* from Equation (2-23).
d) Calculate $G = X + CF$, the minimum revenue requirements *G* of each plan from Equation (2-21).
e) Select as the economic choice the plan having the lowest value of *G*.

#### 2.2.3.3 Conclusions

A technique has been presented for the economic evaluation of power system reliability. The method of determining the failure rates and repair times of different alternatives is not covered here. Additional information relative to the RR method is included in (Jeynes and Van Nemwegen [B17]).

### 2.2.4 Examples

Examples of electric systems with varying degrees of reliability (availability), together with fixed and variable costs are given in Chapter 7.

 Copyright © 1998 IEEE. All rights reserved.

### 2.2.5 Worth of improved reliability in electrical components

All of the data and examples presented in this chapter utilize failure rates and average repair time data for standard electrical components. Unfortunately, industry and commercial standards for recording failure history are very unsophisticated and do not allow differentiation between various grades of equipment or between different manufacturers.

### 2.2.6 Maintenance costs of electrical components

This book does not contain much data on the maintenance costs of electrical components. However, (Heising et al., [B13]), which is included as Appendix J, contains maintenance costs for high-voltage circuit breakers above 63 kV. These studies were made by a working group in CIGRE (International Conference on Large Voltage Electric Systems), which is a technical arm of the International Electrotechnical Commission (IEC). In addition, this CIGRE working group has made a worldwide survey that collected and published all of the necessary reliability data and maintenance cost data that are needed in order to make studies on the worth of improved reliability and reduced maintenance costs of high-voltage circuit breakers. A summary of this data is given in Heising et al., [B13].

## 2.3 Cost of scheduled electrical preventive maintenance

In the economic evaluation of reliability, it is always appropriate to consider the costs of scheduled electrical preventive maintenance. Sometimes these costs are large enough to make it desirable to analyze them separately when comparing alternative designs of industrial power systems. The RR method described in 2.2.3.1 includes a term called the “investment charge factor (*F*),” which is given by Equation (2-23) in 2.2.3.1 and includes *e* (the fixed yearly expenses) as a percentage of the capital investment. Both *F* and *e* are attributed to scheduled electrical preventive maintenance, insurance, property taxes, etc. Since the yearly average costs for scheduled electrical preventive maintenance may not be the same percentage of investment for every component within the industrial power system, a separate, more detailed look is often taken at these costs for each component.

Scheduled electrical preventive maintenance has two major cost elements: labor effort and spare parts consumed. These costs are often expressed on an average yearly basis so as to be usable with the RR method when an economic evaluation is made. These data are needed for each different type of component used in the industrial power system and can be compiled for each component as follows:

a) Labor costs in manhours per component per year
b) Cost of spare parts consumed in dollars per component per year
c) Labor rate in dollars per manhour

If, for example, a component is only maintained once every three years, then its maintenance costs should be divided by three in order to determine the average yearly maintenance cost. The labor rate used probably should only include the overhead costs associated with the storage of spare parts, direct supervision of the maintenance, and costs for necessary test equipment. The labor costs in dollars per component per year can be calculated by multiplying

Copyright © 1998 IEEE. All rights reserved.

items a) and c) together; the result can then be added to item b) to get the total average yearly costs that are attributable to scheduled electrical preventive maintenance.

Data thus collected can become obsolete at a later date due to inflation, which can result in changing the labor rate used and also the average yearly cost of spare parts consumed. But the data for labor in manhours per component per year does not become obsolete due to inflation. Some engineers have chosen to use their labor rate to convert their average yearly cost data for spare parts consumed into average yearly "equivalent manhours" data. This is then added to the labor manhours data to get total equivalent manhours per component per year that includes both the labor cost and the cost of spare parts consumed. The use of equivalent manhours for cost data instead of dollars has two advantages:

— The equivalent manhours data do not become obsolete due to inflation.

— The equivalent manhours data can be considered an international currency. The data are not affected by changing exchange rates between the currencies or different countries. This enables the cost data to be compared with studies from other countries.

Component data on the cost of scheduled electrical preventive maintenance are not included in this book except for the data on high-voltage circuit breakers above 63 kV collected by a CIGRE working group (see Heising, et al., [B13]), which is included in this book as Appendix J. It would be desirable to have such data for all of the electrical equipment categories listed in Table 3-9. It would then be possible to consider the cost of scheduled electrical preventive maintenance in design decisions of the industrial power system by adding this into the MRR method.

## 2.4 Effect of scheduled electrical preventive maintenance on failure rate

One of the important total operating cost decisions made by the management of an industrial plant is how much money to spend for scheduled electrical preventive maintenance. The amount of maintenance performed on a component can affect its failure rate. Very little quantitative data have been collected and published on this subject. Yet this is an important factor when attempting to study the total owning costs of a complete power system. If maintenance effort is reduced the maintenance costs go down. This may increase the failure rate of the components in the power system and raise the costs associated with failures. There is an optimum amount of maintenance for minimum total owning cost of a complete power system.

The subject of electrical preventive maintenance is discussed in Chapter 5. Some data are shown in Tables 5-1 and 5-2 on the effect of the frequency and quality of scheduled electrical preventive maintenance. These data have been used to calculate the effect of maintenance quality on the failure rate of transformers, circuit breakers, and motors shown in Table 5-3. Unfortunately the data do not relate the amount or cost of component maintenance to the failure rate.

 Copyright © 1998 IEEE. All rights reserved.

The effect of the cost of component scheduled electrical preventive maintenance on the failure rate has not been included in this book. More industry studies and published data are needed on this subject, like the example described next.

### 2.4.1 Example

A paper containing quantitative data and an analysis of optimum maintenance intervals has been published (see Sheliga [B22]). This work was based upon 10 000 failures collected at the author's company over a period of seven years for 23 categories of electrical equipment. Included in this paper was a description of just what failures could be prevented by maintenance. Actual data were used to determine how this failure rate varied with the maintenance interval. The optimum maintenance interval was then determined based upon the maintenance cost and the cost of failures/power outages. Failures that could be prevented by diagnostic testing were then studied in a similar manner to those that could be prevented by maintenance. The optimum diagnostic interval was then calculated for 15 equipment categories based upon the cost of diagnostic testing and the cost of failures/power outages.

It was reported that 25% of the failures could have been prevented by maintenance, and additional failures could have been prevented by diagnostic testing.

## 2.5 Bibliography

NOTE—[B14], [B15], [B16], and [B20], respectively, are reprinted in Appendixes A, B, C, and D. [B23] is reprinted in Appendix M. [B13] is reprinted in Appendix J.

[B1] Ayoub, A. K., and Patton, A. D., "A frequency and duration method for generating system reliability evaluation," *IEEE Transactions on Power Apparatus and Systems*, Nov./Dec. 1976, pp. 1929–1933.

[B2] Billinton, R., and Allan, R. N., "Reliability Evaluation of Power Systems," Plenum Publishing Corp., 1983.

[B3] Billinton, R., and Grover, M. S., "A sequential method for reliability analysis of distribution and transmission systems," *Proceedings of the 1975 Annual Reliability and Maintainability Symposium*, Jan. 1975, pp. 460–469.

[B4] Billinton, R., and Wacker, G., "Cost of electrical service interruptions to industrial and commercial consumers," *IEEE IAS Conference Record*, Oct. 7–11, 1985.

[B5] Billinton, R., Wacker, G., and Wojczynshi, E., "Interruption cost methodology and results—A Canadian commercial and small industry survey," *IEEE Transactions on Power Apparatus and Systems*, vol. PAS-103, no. 2, Feb. 1984, pp. 437–443.

[B6] Christiaanse, W. R., "Reliability calculations including the effects of overloads and maintenance," *IEEE Transactions on Power Apparatus and Systems*, Jul./Aug. 1971, pp. 1664–1676.

Copyright © 1998 IEEE. All rights reserved.

[B7] Dickinson, W. H., “Economic evaluation of industrial power systems reliability,” *Transactions of the AIEE (Industry Applications)*, vol. 76, Nov. 1957, pp. 264–272.

[B8] Dickinson, W. H. et al., “Fundamentals of reliability techniques as applied to industrial power systems,” *Conference Record of the 1971 IEEE I&CPS Technical Conference*, pp. 10–31.

[B9] Endrenyi, J., *Reliability Modeling in Electric Power Systems*, New York: John Wiley & Sons, 1978.

[B10] Endrenyi, J., Maenhaut, P. C., and Payne, L. C., “Reliability evaluation of transmission systems with switching after faults—Approximations and a computer program,” *IEEE Transactions on Power Apparatus and Systems*, Nov./Dec. 1973, pp. 1863–1875.

[B11] Gaver, D. P., Montmeat, R. E., and Patton, A. D., “Power system reliability, I—Measures of reliability and methods of calculation,” *IEEE Transactions on Power Apparatus and Systems*, Jul. 1964, pp. 727–737.

[B12] Goushleff, D. C., “Use of interruption costs in regional supply planning,” Ontario Hydro Research Division, presented at the IEEE IAS Conference, Oct. 7–11, 1985.

[B13] Heising, C. R., Janssen, A. L. J., Lanz, E., Colombo, E., Dialynas, E. N., “Summary of CIGRE 13/06 working group world wide reliability data and maintenance cost data on high voltage circuit breakers above 63 kV,” 94 CH34520, Conference Record, *IEEE-IAS Industry Applications Conference*, Oct. 2–5, 1994, Denver, CO, pp. 2226–2234. (See Appendix J.)

[B14] IEEE Committee Report. “Reliability of electric utility supplies to industrial plants,” *Conference Record of the 1975 IEEE I&CPS Technical Conference*, May 5–8, 1975, pp. 131–133.

[B15] IEEE Committee Report. “Report on reliability survey of industrial plants,” *IEEE Transactions On Industry Applications*, Mar./Apr. 1974, pp. 213–235.

[B16] IEEE Committee Report. “Report on reliability survey of industrial plants,” *IEEE Transactions on Industry Applications*, Jul./Aug. 1975, pp. 456–476; Sep./Oct. 1975, p. 681.

[B17] Jeynes, P. H., and Van Nemwegen, L., “The criterion of economic choice,” *Transactions of the AIEE (Power Apparatus and Systems)*, vol. 77, Aug. 1958, pp. 606–635.

[B18] Koval, D. O., and Billinton, R., “Statistical and analytical evaluation of the duration and cost of consumer’s interruptions,” Paper no. A79-057-1, IEEE 1979 Winter Power Meeting, New York, NY.

[B19] Patton, A. D., and Ayoub, A. K., “Reliability Evaluation, Systems Engineering for Power: Status and Prospects,” U.S. Energy Research and Development Administration, publication CONF-750687 1975, pp. 275–289.

 Copyright © 1998 IEEE. All rights reserved.

[B20] Patton, A. D. et al., “Cost of Electrical Interruptions in Commercial Buildings,” *Conference Record of the 1975 IEEE I&CPS Technical Conference,* May 5–8, 1975, pp. 123–129.

[B21] Ringlee, R. J., and Goode, S. D., “On procedures for reliability evaluation of transmission systems,” *IEEE Transactions on Power Apparatus and Systems,* Apr. 1970, pp. 527–537.

[B22] Sheliga, D. J., “Calculation of optimum preventive maintenance intervals for electrical equipment,” *IEEE Transactions on Industry Applications,* Sep./Oct. 1981, pp. 490–495.

[B23] Sullivan, M. J., Vardell, T., Sudeth, B. N., and Vojdani, A., “Interruption costs, customer satisfaction and expectations for service reliability,” Paper no. 95 SM 572-8 PWRS, *IEEE-PES Summer Power Meeting,* July 24–27, 1995, Portland, OR.

Copyright © 1998 IEEE. All rights reserved.

# Chapter 3
# Summary of equipment reliability data

## 3.1 Introduction

This chapter summarizes the reliability data collected from equipment reliability surveys over a period of 35 years. The chapter is divided into two parts, consisting of equipment surveys conducted between 1976 and 1989 (Part 1) and equipment surveys conducted prior to 1976 (Part 2). Detailed reports on the surveys are given in the appendixes and references. The results of these surveys are discussed and compared. Detailed information contained in the other chapters of this book and pertinent to equipment reliability data is referenced in this chapter. Detailed lists of references on equipment reliability are presented in the appendixes and at the end of this chapter.

A knowledge of the reliability of electrical equipment is an important consideration in the design and operation of industrial and commercial power distribution systems. The failure characteristics of individual pieces of electrical equipment (i.e., components) can be partially described by the following basic reliability statistics:

a) Failure rate, often expressed as failures per year per component (failures per unit-year);
b) Downtime to repair or replace a component after it has failed in service, expressed in hours (or minutes) per failure; and
c) In some special cases, probability of starting (or operating) is used.

Reliability data on the pertinent factors (e.g., cause and type of failures, maintenance procedures, repair method, etc.) is also required to practically characterize the performance of electrical equipment in service. (Refer to Appendixes A and B.)

The reliability performance of industrial and commercial electrical power distribution systems (e.g., economic operation, frequency and duration of equipment and system outages, etc.) can be estimated from a knowledge of the reliability data of individual electrical parts (i.e., components) that are interconnected to form an operating system. The analytical models required for estimating the reliability of various power system configurations are presented in Chapters 2 and 8. Based on the results of these analytical models, the cost of interruptions can be estimated and used in the reliability cost/reliability worth methodology presented in Chapter 7 and Appendix C. The cost of power interruptions to industrial plants and commercial buildings is summarized in Chapter 2.

Electrical equipment reliability data is normally obtained from field surveys of individual industrial and commercial equipment failure reports. The reason for conducting a survey is to provide answers to critical questions pertaining to the failure characteristics of electrical equipment in industrial and commercial installations.

Each survey has a defined objective of obtaining field data on electrical equipment failure characteristics, and this determines the form of the questionnaires that are sent to various respondents.

Copyright © 1998 IEEE. All rights reserved.

An analysis of the survey returns may or may not provide answers to all the questions posed in the questionnaire. The significance of the surveyed data obtained is dependent upon many factors, for example, the number of equipment failures reported, their operating history, the survey questionnaire, etc. There will undoubtedly be new questions raised and also some old questions and controversies left unresolved. Items found to be of little significance will be omitted and the survey form simplified to maximize the response for the next survey. The procedure for conducting the survey is given in Appendix F. Information on the determination and analysis of reliability studies is presented in IEEE Std 500-1984 [B1].[1]

The IEEE Industry Applications Society (IAS) has a continuing program to conduct surveys on the reliability of electrical equipment in industrial and commercial installations (see Dickinson [B7], IEEE Committee Reports [B12]–[B16], and O'Donnell [B18], [B19]). The most significant results from these surveys are then summarized for inclusion in a future revision of this standard.

As in previous survey reports, this chapter maintains the standard for credibility of failure rates by identifying categories that contain an insufficient number of failures. If there were less than eight failures, a footnote indicates a small sample size. It is believed that a minimum of eight field failures is necessary to have a reasonable chance of estimating the failure rate or the average downtime per failure to within a factor of two (see Appendix A, Part 1 for details). Both the average downtime per failure data and median downtime per failure data are given so that the effect of a few very long outages on the average downtime can be indicated by a large difference between the average and median values.

An equipment reliability reference guide is shown in Table 3-1. For each electrical component presented in this chapter, the tables and appendixes that contain reliability data pertinent to that component are presented. Table 3-2 contains a summary of the failure rate and average and median downtime per failure data for all electrical equipment surveyed. These values are suggested for use in the absence of better data being available from the reader's own experience.

## 3.2 Part 1: Most recent equipment reliability surveys (1976–1989)

### 3.2.1 1979 switchgear bus reliability data

The reliability of switchgear bus in industrial and commercial applications was investigated in a 1979 survey (see IEEE Committee Report [B14] and Appendix E) and the summarized failure rate and median outage duration time for the various subcategories of equipment are shown in Table 3-3. In this survey, the term "units" for a bus is defined as the total number of connected circuit breakers and connected switches. In the previous survey of 1974, the term "units" included the total number of connected circuit breakers or instrument transformer compartments. The total number of plants in the 1979 survey response was considerably greater than the 1974 survey; however the unit-year sample size was slightly less.

[1]The numbers in brackets preceded by the letter B corresponds to those of the bibliography in 3.4.

 Copyright © 1998 IEEE. All rights reserved.

## Table 3-1—Equipment reliability reference guide

| Electrical equipment | | Reference tables in Chapter 3 | | | | | | | | | | | Appendixes |
|---|---|---|---|---|---|---|---|---|---|---|---|---|---|
| | | Part 1 | | | | Part 2 | | | | | | | |
| | | Surveys 1976–1989 | | | | Surveys prior to 1976 | | | | | | | |
| Motors | > 50 hp | 32 | | | | — | — | — | — | — | 42 | — | A, B, H |
| | > 200 hp | 23–31 | | | | — | — | — | — | — | 42 | — | |
| | > 250 hp | 33 | | | | — | — | — | — | — | 42 | — | |
| Motor starters | | — | | | | — | 37 | 38 | 39 | 40 | 42 | 43 | A, B |
| Generators | | 12 | | | | — | — | — | — | — | 42 | — | A, B, G |
| Transformers | Power | 13 | 15 | 16 | 17 | — | — | — | — | — | 42 | 43 | |
| | | 18 | 19 | 20 | 21 | | | | | | | | |
| | Rectifier | 14 | 16 | 17 | 18 | — | — | — | — | — | 42 | 43 | |
| | | 19 | 20 | 22 | — | | | | | | | | |
| Circuit breakers | | 36 | | | | 35 | — | 38 | 39 | 40 | 42 | 43 | A, B, J, K, P |
| Disconnect switches | | — | | | | — | 37 | 38 | 39 | 40 | 42 | 43 | A, B |
| Bus duct | | — | | | | — | 37 | 38 | 39 | 40 | 42 | — | A, B |
| Switchgear | Bus insulated | 11 | | | | — | — | — | — | — | 42 | — | A, B, E |
| | Bus bare | 11 | | | | — | — | — | — | — | 42 | — | |
| Open wire | | — | | | | — | 37 | 38 | 39 | 40 | 42 | 43 | A, B |
| Cable | | — | | | | — | 37 | 38 | 39 | 40 | 42 | 43 | A, B, I |
| Cable joints | | — | | | | — | 37 | 38 | 39 | 40 | 42 | 43 | |
| Cable terminations | | — | | | | — | 37 | 38 | 39 | 40 | 42 | 43 | |
| Transmission lines 230 kV and above | | — | | | | — | — | — | — | — | — | — | N |
| Electric utility power supplies | | — | | | | — | — | — | — | 41 | 42 | — | A, B, D |

Copyright © 1998 IEEE. All rights reserved.

**Table 3-2—Summary of optional failure rate and average and median downtime per failure for all electrical equipment surveyed**

| Equipment | Equipment subclass | Failure rate (failures per unit-year) | Actual hours of downtime per failure | |
|---|---|---|---|---|
| | | | Industry average | Median plant average |
| Transformers | Liquid filled—All | 0.0062 | 356.1[a] | — |
| | 300–10 000 kVA | 0.0059 | 297.4[a] | — |
| | 10 000+ kVA | 0.0153 | 1178.5[a] | — |
| Rectifier transformers | Liquid filled | | | |
| | 300–10000 kVA | 0.0153 | 1664.0[a] | — |
| Motors > 200 hp[b] | Induction | | | |
| | 0–1000V | 0.0824 | 42.5 | 15.0 |
| | 1001–5000 V | 0.0714 | 75.1 | 12.0 |
| | Synchronous | | | |
| | 001–5000 V | 0.0762 | 78.9 | 16.0 |
| Circuit breakers[c] | Fixed (including molded case) | 0.0052 | 5.8 | 4.0 |
| | 0–600 V—All sizes | 0.0042 | 4.7 | 4.0 |
| | 0–600 A | 0.0035 | 2.2 | 1.0 |
| | Above 600 A | 0.0096 | 9.6 | 8.0 |
| | Above 600 V[c] | 0.0176 | 10.6 | 3.8 |
| | Metalclad drawout type—All | 0.0030 | 129.0 | 7.6 |
| | 0–600 V—All sizes | 0.0027 | 147.0[d] | 4.0 |
| | 0–600 A | 0.0023 | 3.2 | 1.0 |
| | Above 600 A | 0.0030 | 232.0 | 5.0 |
| | Above 600 V[c] | 0.0036 | 109.0[d] | 168.0 |
| Motor starters | Contact type: 0–600V | 0.0139 | 65.1 | 24.5 |
| | Contact type: 601–15 000V | 0.0153 | 284.0 | 16.0 |
| Generators | Continuous service | | | |
| | Steam turbine driven | 0.1691 | 32.7 | — |
| | Emergency and standby units | | | |
| | Reciprocating engine driven | | | |
| | Rate per hour in use (0.00536) | | 478.0 | — |
| | Failures per start attempt (0.0135) | | | |
| Disconnect switches | Enclosed | 0.006100 | 1.6 | 2.8 |
| Switchgear bus— Indoor and outdoor[e] | Insulated: 601–15 000 V | 0.001129 | 261.0 | 28.0 |
| | Bare: 0–600 V | 0.000802 | 550.0 | 27.0 |
| | Bare: Above 600 V | 0.001917 | 17.3 | 36.0 |
| Bus duct— Indoor and outdoor (Unit = 1 circuit ft) | All voltages | 0.000125 | 128.0 | 9.5 |
| Open wire (Unit = 1000 circuit ft) | 0–15 000 V | 0.01890 | 42.5 | 4.0 |
| | Above 15 000 V | 0.00750 | 17.5 | 12.0 |


Copyright © 1998 IEEE. All rights reserved.

**Table 3-2—Summary of optional failure rate and average and median downtime per failure for all electrical equipment surveyed (*Continued*)**

| Equipment | Equipment subclass | Failure rate (failures per unit-year) | Actual hours of downtime per failure | |
|---|---|---|---|---|
| | | | Industry average | Median plant average |
| Cable—All types of insulation (Unit = 1000 circuit ft)[f] | Above ground and aerial | | | |
| | 0–600 V | 0.00141 | 457.0 | 10.5 |
| | 601–15 000 V—All | 0.01410 | 40.4[d] | 6.9 |
| | In trays above ground | 0.00923 | 8.9 | 8.0 |
| | In conduit above ground | 0.04918 | 140.0 | 47.5 |
| | Aerial cable | 0.01437 | 31.6 | 5.3 |
| | Below ground and direct burial | | | |
| | 0–600 V | 0.00388 | 15.0 | 24.0 |
| | 601–15 000 V—All | 0.00617 | 95.5[a] | 35.0 |
| | In duct or conduit | 0.00613 | 96.8 | 35.0 |
| | Above 15 000 V | 0.00336 | 16.0 | 16.0 |
| Cable (Unit = 1000 circuit ft) | 601–15 000 V | | | |
| | Thermoplastic | 0.00387 | 44.5 | 10.0 |
| | Thermosetting | 0.00889 | 168.0 | 26.0 |
| | Paper insulated lead covered | 0.00912 | 48.9 | 26.8 |
| | Other | 0.01832 | 16.1 | 28.5 |
| Cable joints—All types of insulation | 601–15 000V | | | |
| | In duct or conduit below ground | 0.000864 | 36.1 | 31.2 |
| Cable joints[f] | 601–15 000V | | | |
| | Thermoplastic | 0.000754 | 15.8 | 8.0 |
| | Paper insulated lead covered | 0.001037 | 31.4 | 28.0 |
| Cable terminations[f] all types of insulation | Above ground and aerial | | | |
| | 0-600V | 0.000127 | 3.8 | 4.0 |
| | 601–15 000 V—All | 0.000879 | 198.0 | 11.1 |
| | Aerial cable | 0.001848 | 48.5 | 11.3 |
| | In trays above ground | 0.000333 | 8.0 | 9.0 |
| | In duct or conduit below ground | | | |
| | 601–15 000 V | 0.000303 | 25.0 | 23.4 |
| Cable terminations | 601–15 000 V | | | |
| | Thermoplastic | 0.004192 | 10.6 | 11.5 |
| | Thermosetting | 0.000307 | 451.0 | 11.3 |
| | Paper insulated lead covered | 0.000781 | 68.8 | 29.2 |

Copyright © 1998 IEEE. All rights reserved.

**Table 3-2—Summary of optional failure rate and average and median downtime per failure for all electrical equipment surveyed (*Continued*)**

| Equipment | Equipment subclass | Failure rate (failures per unit-year) | Actual hours of downtime per failure | |
|---|---|---|---|---|
| | | | Industry average | Median plant average |
| Miscellaneous | Inverters | 1.254000 | 107.0 | 185.0 |
| | Rectifiers | 0.038000 | 39.0 | 52.2 |

[a]See Tables 3-5 and 3-6 in this chapter for data comparing replacement time with average repair time of transformers.
[b]See Table 3-24 for motors > 50 hp.
[c]See Appendix J for circuit breakers above 63 kV from a CIGRE 13-06 worldwide survey. See Appendix K for a later small IEEE survey.
[d]See Tables 50, 51, 55, and 56 in Appendix B for results on a special study on effects of failure repair method and failure repair urgency on the average hours downtime per failure.
[e]Unit = the number of connected circuit breakers and connected switches.
[f]See Appendix I for utility industry data on underground cable, terminations, and splices.

**Table 3-3—Switchgear bus, indoor and outdoor 1979 survey data**

| Industry | Equipment subclass | Failure rate (failures per unit-year) | Median hours downtime per failure |
|---|---|---|---|
| All | All | 0.001050 | 28 |
| All | Insulated, above 600 V | 0.001129 (0.001700) | 28 (26.8)[a] |
| All | Bare, all voltages | 0.000977 | 28 |
| All | Bare, 0–600 V | 0.000802 (0.000340) | 27 (24.0)[a] |
| All | Bare, above 600 V | 0.001917 (0.000630) | 36 (13.0)[a] |
| Petroleum/Chemical | Insulated, above 600 V | 0.002020 | 40 |
| Petroleum/Chemical | Bare, all voltages | 0.002570 | 28 |
| Petroleum/Chemical | Bare, 0–600 V | 0.002761 | 22 |
| Petroleum/Chemical | Bare, above 600 V | [b] | 48 |

[a]Number in parentheses = the result from the 1974 survey.
[b]Small sample size, less than eight failures.


Copyright © 1998 IEEE. All rights reserved.

The 1974 survey generated some controversy concerning bare and insulated buses. As can be seen from Table 3-3, insulated bus equipment showed a significantly higher failure rate than bare bus above 600 V. An analysis of the 1974 data base revealed that the majority of the data collected came from the petroleum/chemical industry. In the 1979 survey, the petroleum/chemical industry data was separated from the remaining industrial data base and indicated that the number of reported failures in each category was dominated by the petroleum/chemical industries. The bare bus failure rate was significantly higher and the insulated bus failure rate lower in the 1979 survey than in the 1974 survey.

A comparison of the median downtime per failure in both surveys revealed no significant differences. It is important to emphasize that the duration of an outage is dependent on many factors, and without supplementary information on the operating procedures, maintenance type, spare parts inventory, etc., the data in these surveys should be viewed as general information.

Some important additional observations based on the 1979 survey are as follows:

a) Newer bus appears to experience a higher failure rate than older bus. This may be partly explained by improper installation, type of construction of new switchgear, etc., but is not completely consistent with the observation that failure rates are highly dependent on maintenance.

b) Outdoor bus shows a higher failure rate than indoor bus.

c) Primary and contributing causes of failures were investigated. Inadequate maintenance was one of the leading “suspected primary causes of failure” and exposure to contaminants (including dust, moisture, and chemicals) was the leading “contributing cause to failure.” This tends to support the data showing outdoor bus with a relatively high failure rate.

d) The survey results on type of failures show a surprisingly high percentage of line-to-line failures, rather than line-to-ground.

### 3.2.2 1980 generator survey data

The results of the 1980 generator survey data (see IEEE Committee Report [B13]) are summarized in Table 3-4. A “unit” in this survey was defined to include the generator’s driver and its ancillary equipment, including the device from which the generator’s output is made available to the “outside” world. The term “unit-year” was defined as the summation of the running times reported for each generator.

Two major categories (i.e., continuously applied units and emergency or standby applied units) emerged from an evaluation of the responses. All of the continuous units were steam turbine driven, and all of the emergency or standby units were reciprocating engine driven. An important point to note on the data for emergency and standby units: Failure to start for automatically started units was counted as a failure, whereas failure to start for manually started units was not counted as a failure.

Copyright © 1998 IEEE. All rights reserved.

**Table 3-4—1980 generator survey data**

| Equipment subclass | Average downtime per failure | Failure rate |
|---|---|---|
| Continuous service steam turbine driven | 32.7 | 0.16900 failures per unit-year |
| Emergency and standby units reciprocating engines driven | 478.0 | 0.00536 failures per hour in use |
| Reciprocating engines driven | [a] | 0.01350 failures per start attempt |
| NOTE—Appendix L contains data from a recent survey of diesel and gas turbine generators, 600–1800 kW. | | |

[a] Small sample size—less than eight failures.

### 3.2.2.1 Reliability/availability guarantees of gas turbine and combined cycle generating units

Many industrial firms are now purchasing gas turbine generating units or combined cycle units that include both a gas turbine and a steam turbine. In some cases, the specification contains a reliability/availability guarantee. Appendix N (see Ekstrom [B8]) contains one manufacturer's suggestion on how to write a reliability/availability guarantee when purchasing such units; this is a very thorough description of the factors that need to be considered along with the necessary definitions. Appendix N also contains some 1993 data on the reliability/availability of gas turbine units that was collected by an independent data collection organization.

### 3.2.3 1979 survey of the reliability of transformers

A survey published in 1973–74 raised some interesting questions and created some controversy (see IEEE Committee Report [B11]). The most controversial items in this survey concerned the average outage duration time after a transformer failure in relation to the failure restoration method, and the comparatively high failure rate for rectifier transformers.

The 1979 survey form (see IEEE Committee Report [B12]) was improved considerably, taking lessons learned from the 1973–74 version. Items felt to be of little significance in the past were omitted and the form was simplified to maximize the response. Data relating specifically to transformer reliability such as rating, voltage, age, and maintenance were included in the new form. The most significant categories in the failed unit data are the causes of failure, the restoration method, restoration urgency and the duration of failure, and the age at time of failure. The survey form of the 1979 survey (published in 1983) is shown in the Appendix G.

 Copyright © 1998 IEEE. All rights reserved.

### 3.2.3.1 Failure rate and restoration method for power and rectified transformers survey results

The survey response for power transformers is summarized in Table 3-5 and the survey response for rectifier transformers is summarized in Table 3-6.

**Table 3-5—Power transformers (1979 survey)**

| Equipment subclass | Failure rate (failures per unit-year) | Average repair time (hours per failure) | Average replacement time (hours per failure) |
|---|---|---|---|
| All liquid filled | 0.0062 | 356.1 | 85.1 |
| Liquid filled 300–10 000 kVa | 0.0059 | 297.4 | 79.3 |
| Liquid filled >10 000 kVA | 0.0153 | 1178.5[a] | 192.0[a] |
| Dry 300–10 000 kVA | [a] | [a] | [a] |

[a]Small sample size, less than eight failures.

**Table 3-6—Rectifier transformers (1979 survey)**

| Equipment subclass | Failure rate (failures per unit-year) | Average repair time (hours per failure) | Average replacement time (hours per failure) |
|---|---|---|---|
| All liquid filled | 0.0190 | 2316.0 | 41.4 |
| Liquid filled 300–10 000 kVa | 0.0153 | 1664.0[a] | 38.7[a] |
| Liquid filled >10 000 kVA | [a] | [a] | [a] |

[a]Small sample size, less than eight failures.

The survey results for the liquid-filled power transformers compared favorably between the 1973–74 and 1979 surveys: 0.0041 and 0.0062 failures per unit-year, respectively. The 1979 survey also confirmed the fact that the failure rate for rectifier transformers (i.e., 0.0190) is much higher than those for the other transformer categories (i.e., 0.0062). This may be due to the severe duties to which they were subjected and/or the harsh environments in which they are housed.

Copyright © 1998 IEEE. All rights reserved.

Tables 3-5 and 3-6 include data on restoration time vs. restoration method. The data clearly indicates that the restoration of a unit to service by repair rather than replacement results in a much longer outage duration in every case. This is consistent with previous survey results. Despite this fact, in most categories a larger number of units were restored to service by repair. These results show the obvious benefits in having spares at the site or readily available. The data also provides some of the information necessary in the preparation of an economic justification for spares. The averages shown represent only those cases where restoration work was begun *immediately.* Those instances in which the repair or replacement was deferred were excluded to avoid distorting the average restoration time data.

### 3.2.3.2 Failure rate vs. age of power transformers

The survey response for power transformer failures as a function of their age is summarized in Table 3-7.

**Table 3-7—Failure rate vs. age of power transformers (1979 survey)**

| Equipment subclass | Age[a] (years) | Number of units | Sample size (unit-years) | Number of failures[b] | Failure rate (failures per unit-year) |
|---|---|---|---|---|---|
| Liquid filled 300–10 000 kVa | 1–10 | 638 | 2625.5 | 19 | 0.0072 |
| Liquid filled 300–10 000 kVa | 11–25 | 715 | 8846.5 | 47 | 0.0053 |
| Liquid filled 300–10 000 kVa | >25 | 397 | 5938.0 | 36 | 0.0060 |
| Liquid filled >10 000 kVA | 1–10 | 27 | 144.0 | 0[c] | — |
| Liquid filled >10 000 kVA | 11–25 | 28 | 283.5 | 7[c] | 0.0246[c] |
| Liquid filled >10 000 kVA | >25 | 9 | 158.0 | 2[c] | 0.0126[c] |

[a]Age was the age of the transformer at the end of the reporting period.
[b]Relay or tap changer faults were not considered in calculation of failure rates or repair and replacement times.
[c]Small sample size; less than eight failures.

An examination of Table 3-7 reveals that the failure rates for power transformers was approximately equal in all three age groups. It can be seen that slightly higher failure rates for transformer units aged 1 to 10 years and for units greater than 25 years may be attributable to “infant mortality” and to units approaching the end of their life, respectively.

 Copyright © 1998 IEEE. All rights reserved.

### 3.2.3.3 Failure-initiating cause

Table 3-8 summarizes the *failure-initiating cause* data for power and rectifier transformers. This table reveals that a large percentage of transformer failures was initiated by some type of insulation breakdown or transient overvoltages.

**Table 3-8—Failure-initiating cause for power and rectifier transformers (1979 survey)**

| Failure-initiating cause | All power transformers | | All rectifier transformers | |
|---|---|---|---|---|
| | Number of failures[a] | Percentage | Number of failures | Percentage |
| Transient overvoltage disturbance (switching surges, arcing ground fault, etc.) | 18 | 16.4% | 2 | 13.3% |
| Overheating | 3 | 2.7 | 1 | 6.7 |
| Winding insulation breakdown | 32 | 29.1 | 2 | 13.3 |
| Insulation bushing breakdown | 15 | 13.6 | 1 | 6.7 |
| Other insulation breakdown | 6 | 5.5 | 3 | 20.0 |
| Mechanical breaking, cracking, loosening, abrading, or deforming of static or structural parts | 8 | 7.3 | 3 | 20.0 |
| Mechanical burnout, friction, or seizing of moving parts | 3 | 2.7 | 2 | 13.3 |
| Mechanically caused damage from foreign source (digging, vehicular accident, etc.) | 3 | 2.7 | 0 | 0.0 |
| Shorting by tools or other metal objects | 1 | 0.9 | 0 | 0.0 |
| Shorting by birds, snakes, rodents, etc. | 3 | 2.7 | 0 | 0.0 |
| Malfunction of protective relay control device or auxiliary device | 5 | 4.6 | 0 | 0.0 |
| Improper operating procedure | 4 | 3.6 | 0 | 0.0 |
| Loose connection or termination | 8 | 7.3 | 1 | 6.7 |
| Others | 1 | 0.9 | 0 | 0.0 |
| Continuous overvoltage | 0 | 0.0 | 0 | 0.0 |
| Low voltage | 0 | 0.0 | 0 | 0.0 |
| Low frequency | 0 | 0.0 | 0 | 0.0 |
| Total | 110 | 110.0% | 15 | 100.0% |

[a]Failure = initiating cause not specified for two failures.

Copyright © 1998 IEEE. All rights reserved.

### 3.2.3.4 Failure-Contributing Cause

Table 3-9 summarizes the *failure-contributing cause* for power and rectifier transformers. Normal deterioration from age and cooling medium deficiencies were reported to have contributed to a large number of both power and rectifier transformer failures.

**Table 3-9—Failure-contributing cause for power and rectifier transformers (1979 survey)**

| Failure-contributing cause | All power transformers | | All rectifier transformers | |
|---|---|---|---|---|
| | Number of failures[a] | Percentage | Number of failures[b] | Percentage |
| Persistent overloading | 1 | 1.1% | 0 | 0.0% |
| Abnormal temperature | 5 | 5.5% | 1 | 7.1 |
| Exposure to aggressive chemicals, solvents, dusts, moisture, or other contaminants | 13 | 14.4 | 1 | 7.1 |
| Normal deterioration from age | 12 | 13.3 | 4 | 28.6 |
| Severe wind, rain, snow, sleet, or other weather conditions | 4 | 4.4 | 0 | 0.0 |
| Lack of protective device | 2 | 2.2 | 0 | 0.0 |
| Malfunction of protective device | 7 | 7.8 | 0 | 0.0 |
| Loss, deficiency, contamination, or degradation of oil or other cooling medium | 9 | 10.0 | 3 | 21.5 |
| Improper operating procedure or testing error | 3 | 3.3 | 0 | 0.0 |
| Inadequate maintenance | 7 | 7.8 | 3 | 21.5 |
| Others | 27 | 30.0 | 1 | 7.1 |
| Exposure to nonelectrical fire or burning | 0 | 0.0 | 0 | 0.0 |
| Obstruction of ventilation by foreign object or material | 0 | 0.0 | 0 | 0.0 |
| Improper setting of protective device | 0 | 0.0 | 0 | 0.0 |
| Inadequate protective device | 0 | 0.0 | 1 | 7.1 |
| Total | 90 | 100.0% | 14 | 100.0% |

[a]Failure-contributing cause not specified for 22 failures.
[b]Failure-contributing cause not specified for two failures.


Copyright © 1998 IEEE. All rights reserved.

### 3.2.3.5 Suspected failure responsibility

Table 3-10 summarizes the *suspected failure responsibility* for power and rectifier transformer failures. The respondents believed that manufacturer defects and inadequate maintenance were responsible for the majority of power transformer failures (i.e., 59.3%). Table 3-10 shows that inadequate operating procedures were a more significant cause of rectifier transformer failures (i.e., 31.2%) than inadequate maintenance.

**Table 3-10—Suspected failure responsibility for power and rectifier transformers (1979 survey)**

| Failure-initiating cause | All power transformers | | All rectifier transformers | |
|---|---|---|---|---|
| | Number of failures[a] | Percentage | Number of failures | Percentage |
| Manufacturer defective component or improper assembly | 32 | 33.3% | 5 | 31.2% |
| Transportation to site, improper handling | 1 | 1.0 | 0 | 0.0 |
| Application engineering, improper application | 3 | 3.1 | 2 | 12.5 |
| Inadequate installation and testing prior to start up | 6 | 6.3 | 0 | 0.0 |
| Inadequate maintenance | 25 | 26.0 | 2 | 12.5 |
| Inadequate operating procedures | 4 | 4.2 | 5 | 31.3 |
| Outside agency—Personnel | 3 | 3.1 | 0 | 0.0 |
| Outside agency—Others | 6 | 6.3 | 0 | 0.0 |
| Others | 16 | 16.7 | 2 | 12.5 |
| Total | 96 | 100.0 | 16 | 100.0% |

[a]Suspected failure responsibility not specified for 16 failures.

### 3.2.3.6 Maintenance cycle and extent of maintenance

The 1973–1974 survey asked the respondent to give an opinion of the maintenance quality as excellent, fair, poor, or none. It is very difficult to be completely objective in responding to this type of question. The 1979 survey, therefore, asked for a brief description of the extent of maintenance performed, the idea being to enable the reader to judge the benefits derived from a particular maintenance procedure. The large percentage of failures that resulted from

Copyright © 1998 IEEE. All rights reserved.

inadequate maintenance shows the importance of a comprehensive preventive maintenance program and compilation of accurate data on the extent and frequency of the maintenance performed. Unfortunately, the response did not lend itself to reporting in tabular form. Maintenance information continues to be the most difficult to obtain and report for all equipment categories.

#### 3.2.3.7 Type of failure

The 1979 survey limited the choices of failure type to “winding” and “other” as shown in Table 3-11 for power and rectifier transformers. Clearly, the most significant failure type was that occurring in power transformer windings.

**Table 3-11—Type of failure for power and rectifier transformers (1979 survey)**

| Failure-initiating cause | All power transformers | | All rectifier transformers | |
|---|---|---|---|---|
| | Number of failures | Percentage | Number of failures | Percentage |
| Winding | 59 | 53% | 8 | 50% |
| Other | 53 | 47 | 8 | 50 |

#### 3.2.3.8 Failure characteristics

The failure characteristics of power and rectifier transformers are shown in Table 3-12. As would be expected, the survey results show that about 75% of transformer failures resulted in their removal from service by automatic protective devices; however, the percentage requiring manual removal was significant. Increasing use of transformer oil or gas analysis could be a factor here, enabling detection of incipient faults in their early stages, and thus permitting manual removal before a major failure occurs.

#### 3.2.3.9 Voltage rating

The failure rates for liquid-filled power transformers and rectifier transformers classified by their voltage ratings is shown in Tables 3-13 and 3-14, respectively. An examination of Table 3-13 reveals the failure rate for the 600–15 000 V transformers (i.e., 0.0052 failures per unit year) is less than that for the higher voltage units. The lack of data (i.e., small sample sizes) reported for rectifier transformers makes it impossible to draw any definite conclusions as to the effect of voltage or size on their failure rates.

 Copyright © 1998 IEEE. All rights reserved.

**Table 3-12—Failure characteristic for power and rectifier transformers (1979 survey)**

| Failure-initiating cause | All power transformers | | All rectifier transformers | |
|---|---|---|---|---|
| | Number of failures | Percentage | Number of failures | Percentage |
| Automatic removal by protective device | 83 | 75% | 11 | 69% |
| Partial failure, reducing capacity | 5 | 5 | 0 | 0 |
| Manual removal | 23 | 20 | 5 | 31 |

**Table 3-13—Failure rate vs. voltage rating and size for power transformers (1979 survey)**

| Equipment subclass | Voltage (kV) | Number of units | Sample size (unit-years) | Number of failures | Failure rate (failures per unit-year) |
|---|---|---|---|---|---|
| Liquid filled 300–10 000 kVa | 0.16–15 | 1626 | 15 775 | 82 | 0.0052 |
| Liquid filled 300–10 000 kVa | >15 | 124 | 1637 | 18 | 0.0110 |
| Liquid filled >10 000 kVA | >15 | 52 | 490 | 9 | 0.0184[c] |

**Table 3-14—Failure rate vs. voltage rating for rectifier transformers (1979 survey)**

| Equipment subclass | Voltage (kV) | Number of units | Sample size (unit-years) | Number of failures | Failure rate (failures per unit-year) |
|---|---|---|---|---|---|
| All liquid filled | 0.16–15 | 65 | 745 | 15 | 0.0201 |

### 3.2.4 1983 IEEE survey on the reliability of large motors

A decision was made by the IEEE Motor Reliability Working Group to focus on motors that were of a critical nature in industrial and commercial installations and, thus, only motors

Copyright © 1998 IEEE. All rights reserved.

larger than 200 hp were selected to be included in the survey (see IEEE Committee Report [B13] and Appendix H). Another decision was made to limit the survey to only include motors that were 15 years old or less to focus on motors that were similar to those presently being manufactured and used today.

Failure rates are given for induction, synchronous, wound rotor, and direct-current motors. Pertinent factors that affect the failure rates of these motors are identified. Data is presented on key variables such as downtime per failure, failed component, causes of failure, and the time of failure discovery. The results of this recent survey are compared with four other surveys on the reliability of motors (see IEEE Std 841-1994 [B2], Albrecht et al., [B5], IEEE Committee Reports [B15], [B16]). Details of the report are shown in Appendix H. The results of the survey are summarized in this subclause. The term “large motor” is defined in this subclause to be any motor whose horsepower rating exceeds 200 hp.

#### 3.2.4.1 Overall summary of failure rate for large motors

The 1983 survey included data reported for 360 failures on 1141 motors with a total service of 5085 unit-years. The overall summary of the survey results for induction, synchronous, wound rotor, and direct-current motors is shown in Table 3-15. Calendar time was used in the calculation of the unit-years of service (rather than the running time) to simplify the data collection procedure.

To summarize the important conclusions derived from the 1983 survey on the failure rates of large motors:

a) Induction and synchronous motors had approximately the same failure rate of 0.07 to 0.08 failures per unit-year.
b) Induction motors rated 0 to 1000 V and those rated 1001–5000 V had approximately the same failure rates. The response on motors operating above 5000 V was too small to draw any meaningful conclusions.
c) Wound-rotor motors rated 0 to 1000 V had a failure rate that was about the same as induction motors of the same rating.
d) The sample size for direct current motors was too small to draw any meaningful conclusions.
e) Motors with intermittent duty operation had a failure rate that was about half as great as those with continuous duty.
f) Motors with less than one start per day had approximately the same failure rate as those motors with between one to ten starts per day, which would indicate that up to ten starts per day does not have a major effect on the motor failure rates.

#### 3.2.4.2 Downtime per failure vs. repair/replacement and urgency for repair for large motors

The comparison of the downtime per motor failure data for “repair” vs. “replace with spare” is considered important when deciding whether a spare motor should be purchased when

 Copyright © 1998 IEEE. All rights reserved.

**Table 3-15—Overall summary for large motors above 200 hp (see O'Donnell [B18])**

| Number of plants in sample size | Sample size (unit-years) | Number of failures reported | Equipment subclass | Failure rate (failures per unit-year) | Average hours down-time per failure | Average hours down-time per failure |
|---|---|---|---|---|---|---|
| 75 | 5085.0 | 360 | All | 0.0708 | 69.3 | 16.0 |
| 33<br>52<br>5 | 1080.3<br>2844.4<br>78.1 | 89<br>203<br>2[a] | Induction<br>0–1000 V<br>1001–5000 V<br>5001–15 000 V | 0.0824<br>0.0714<br>[a] | 42.5<br>75.1<br>[a] | 15.0<br>12.0<br>[a] |
| 19<br>2 | 459.3<br>29.5 | 35<br>3[a] | Synchronous<br>1001–5000 V<br>5001–15 000 V | 0.0762<br>[a] | 78.9<br>[a] | 16.0<br>[a] |
| 5<br>9<br>2 | 137.0<br>251.1<br>39.0 | 10<br>8<br>4[a] | Wound rotor<br>0–1000 V<br>1001–5000 V<br>5001–15 000 V | 0.0730<br>0.0319<br>[a] | [a]<br>[a]<br>[a] | [a]<br>[a]<br>[a] |
| 5<br>1 | 122.7<br>30.0 | 6[a]<br>— | Direct current<br>0–1000 V<br>1001–5000 V | [a]<br>— | [a]<br>— | [a]<br>— |

[a]Small sample size; less than eight failures.

designing a new plant. The downtime per failure survey characteristics for all types of motors grouped together as a category is shown in Table 3-16.

An examination of Table 3-16 shows the effect on the "repair" time that the "urgency for repair" has had. There were 45 cases of motor failures where the "repair" activities were carried out on a "round-the-clock, all-out" effort. There were four cases of motor failures where "low-priority" urgency resulted in a very long downtime; it is important to exclude these cases when making decisions on the design of industrial and/or commercial power systems. In general, the "average downtime per failure" is about five times larger for "repair" vs. "replace with spare."

### 3.2.4.3 Failed component—large motors

The identified motor component that failed is shown in Table 3-17 for induction, synchronous, wound rotor, direct-current, and "all" motors.

It can be seen that the two largest categories reported are motor *bearing* and *winding* failures with 166 and 97 failures, respectively, out of a total of 380 failures. Bearings and windings represent 44% and 26%, respectively, of the total number of motor failures.

Copyright © 1998 IEEE. All rights reserved.

**Table 3-16—Downtime per failure vs. repair or replace with spare and urgency for repair—All types of motors above 200 hp (see O'Donnell [B18])**

| | Number of failures | Average hours (downtime per failure) | Median hours (downtime per failure) |
|---|---|---|---|
| Repair—Normal working hours[a] | 87 | 97.7 | 24.0 |
| Repair—Round the clock | 45 | 81.4 | 72.0 |
| Replace with spare[b] | 111 | 18.2 | 8.0 |
| Low priority | 4[c] | 370.0[c] | 400.0[c] |
| Not specified | 6[c] | 288.0[c] | 240.0[c] |
| Total | 251 | 69.3 | 14.0 |

[a]6570 h for one failure omitted.
[b]960 h for one failure omitted.
[c]Small sample size; less than eight failures.

**Table 3-17—Failed component—Large motors (above 200 hp) (see O'Donnell [B18])**

(Number of failures)

| Failed component[a] | Induction motors | Synchronous motors | Wound rotor motors | Direct-current motors | Total (all types) |
|---|---|---|---|---|---|
| Bearings | 152 | 2 | 10 | 2 | 166 |
| Windings | 75 | 16 | 6 | — | 97 |
| Rotor | 8 | 1 | 4 | — | 13 |
| Shaft or coupling | 19 | — | — | — | 19 |
| Brushes or slip ring | — | 6 | 8 | 2 | 16 |
| External devices | 10 | 7 | 1 | — | 18 |
| Not specified | 40 | 9 | — | 2 | 51 |
| Total | 304 | 41 | 29 | 6 | 380 |

[a]Some respondents reported more than one failed component per motor failure.

### 3.2.4.4 Failed component vs. time of discovery—Large motors

Data on the failed component vs. the time the failure was discovered is shown in Table 3-18. It can be seen that 60.5% of the failures found during "maintenance or test" are bearings. Many users consider that it is very important to find as many failures as possible during "maintenance or test" rather than "normal operation." Bearings and windings represent 36.6% and 33.1%, respectively, of the failures discovered during "normal operation."


Copyright © 1998 IEEE. All rights reserved.

**Table 3-18—Failed component vs. time of discovery (all types of motors above 200 hp) (see O'Donnell [B18])**

(Percentage of failures)

| Failed component | Time of discovery | | |
|---|---|---|---|
| | Normal operation | Maintenance or test | Other |
| Bearing | 36.6% | 60.5% | 50.0% |
| Windings | 33.1 | 8.3 | 28.6 |
| Rotor | 5.1 | 1.8 | 0.0 |
| Shaft or coupling | 5.8 | 8.3 | 14.3 |
| Brushes or slip rings | 3.1 | 7.3 | 0.0 |
| External devices | 5.0 | 3.7 | 0.0 |
| Not specified | 11.3 | 10.1 | 7.1 |
| Total percentage of failures | 100.0% | 100.0% | 100.0% |
| Total number of failures | 257 | 109 | 14 |

### 3.2.4.5 Causes of large motor bearing and winding failures

The causes of motor failures categorized according to the failure initiator, the failure contributor, and the failure's underlying cause are shown in Table 3-19 for induction, synchronous, and "all" motors.

"Mechanical breakage" is the largest failure initiator for *induction* motors. "Normal deterioration from age," "high vibration," and "poor lubrication" are the major failure contributors to induction motor failures. "Inadequate maintenance" and "defective component" are the largest underlying causes of induction motor failures.

"Electrical fault or malfunction" and "other insulation breakdown" are the major failure initiators for *synchronous* motors. "Normal deterioration from age" is the major fault contributor of synchronous motors. "Defective component" is the largest underlying cause of synchronous motor failures.

Table 3-19 shows a correlation between *bearing failures* and the *causes of failure:* 50.3% of bearing failures were initiated by "mechanical breakage;" 31.3% and 21.8%, respectively, had "poor lubrication" and "high vibration" as failure contributors; and 27.6% blamed "inadequate maintenance" as the underlying cause.

Table 3-19 also shows a correlation between *winding failures* and the *causes of failure*: 36.7% of the winding failures had "other insulation breakdown" as the initiator; 18.5% and

Copyright © 1998 IEEE. All rights reserved.

**Table 3-19—Causes of failure vs. motor type and vs. bearing and winding failures—Motors above 200 hp (see O'Donnell [B18])**

(Percentage of failures)

| All motor types—failed component | | All types of motors % | Induction motors % | Synchronous motors % | Causes of failures |
|---|---|---|---|---|---|
| Bearings % | Windings % | | | | |
| | | | | | *Failure initiator* |
| 0.0% | 4.1% | 1.5% | 1.4% | 0.0% | Transient overvoltage |
| 12.4 | 21.4 | 13.2 | 14.7 | 0.0 | Overheating |
| 1.9 | 36.7 | 12.3 | 11.9 | 21.1 | Other insulation breakdown |
| 50.3 | 10.2 | 33.1 | 37.4 | 5.2 | Mechanical breakage |
| 3.7 | 11.2 | 7.6 | 5.8 | 23.7 | Electrical fault or malfunction |
| 0.0 | 2.1 | 0.9 | 0.7 | 2.6 | Stalled motor |
| 31.7 | 14.3 | 31.4 | 28.1 | 47.4 | Other |
| 100.0% | 100.0% | 100.0% | 100.0% | 100.0% | Total percentage of failures |
| 161 | 98 | 341 | 278 | 38 | Total number of failures |
| | | | | | *Failure contributor* |
| 1.4% | 6.5% | 4.2% | 4.9% | 2.7% | Persistent overheating |
| 0.7 | 7.6 | 3.0 | 3.4 | 0.0 | High ambient temperature |
| 2.7 | 18.5 | 5.8 | 6.7 | 2.7 | Abnormal moisture |
| 0.0 | 5.4 | 1.5 | 1.5 | 2.7 | Abnormal voltage |
| 0.0 | 1.1 | 0.6 | 0.7 | 0.0 | Abnormal frequency |
| 21.8 | 8.7 | 15.5 | 17.6 | 5.4 | High vibration |
| 5.4 | 6.5 | 4.2 | 4.5 | 2.7 | Aggressive chemicals |
| 31.3 | 5.4 | 15.2 | 16.9 | 8.1 | Poor lubrication |
| 0.0 | 7.6 | 3.9 | 2.2 | 2.7 | Poor ventilation or cooling |
| 20.4 | 18.5 | 26.4 | 24.0 | 51.4 | Normal deterioration from age |
| 16.3 | 14.2 | 19.7 | 17.6 | 21.6 | Other |
| 100.0% | 100.0% | 100.0% | 100.0% | 100.0% | Total percentage of failures |
| 147 | 92 | 330 | 267 | 37 | Total number of failures |
| | | | | | *Failure underlying cause* |
| 17.8% | 10.9% | 20.1% | 20.3% | 22.2% | Defective component |
| 14.5 | 10.9 | 12.9 | 15.9 | 0.0 | Poor installation/testing |
| 27.6 | 19.6 | 21.4 | 22.8 | 11.1 | Inadequate maintenance |
| 2.0 | 6.5 | 3.6 | 3.3 | 2.8 | Improper operation |
| 0.7 | 0.0 | 0.6 | 0.8 | 0.0 | Improper handling/shipping |
| 7.9 | 7.6 | 6.1 | 6.5 | 2.8 | Inadequate physical protection |
| 2.6 | 15.2 | 5.8 | 5.3 | 11.1 | Inadequate electrical protection |
| 7.2 | 5.4 | 6.8 | 5.7 | 5.6 | Personnel error |
| 2.0 | 3.3 | 3.9 | 2.8 | 13.9 | Outside agency—Not personnel |
| 5.9 | 4.3 | 4.9 | 4.9 | 0.0 | Motor-driven equipment mismatch |
| 11.8 | 16.3 | 13.9 | 11.7 | 30.5 | Other |
| 100.0% | 100.0% | 100.0% | 100.0% | 100.0% | Total percentage of failures |
| 152 | 92 | 309 | 246 | 36 | Total number of failures |


Copyright © 1998 IEEE. All rights reserved.

18.5%, respectively, had “normal deterioration from age” and “abnormal moisture” as failure contributors; 19.6% “inadequate maintenance” and 15.2% had “inadequate electrical protection” as the underlying cause.

It is of interest to note that “inadequate maintenance” was the largest underlying cause of both bearing and winding failures. A special study of the 71 failures attributed to “Inadequate maintenance” is shown in Table 3-20. It can be clearly seen that 59.1% of the motor components that failed were bearings, that 52.1% of the failures were *initiated* by “mechanical breakage,” and 43.7% of the failures had “poor lubrication” as a *failure contributor.*

**Table 3-20—Failures caused by “inadequate maintenance” vs. “failed component,” “failure initiator,” and “failure contributor” (All types of motors above 200 hp) (see O’Donnell [B18])**

(Number of failures in percent)

| | | | |
|---|---|---|---|
| | % | | Failure initiator |
| | 59.1% | | Bearing |
| | 25.4 | | Winding |
| | 1.4 | | Rotor |
| | 0.0 | | Shaft or coupling |
| | 8.5 | | Brushes or slip rings |
| | 1.4 | | External device |
| | 4.2 | | Other |
| | 100.0% | | Total percentage |
| | | | (Number of failures = 71) |
| | % | | Failure initiator |
| | 0.0% | | Transient overvoltage |
| | 4.2 | | Overheating |
| | 14.1 | | Other insulation breakdown |
| | 52.1 | | Mechanical breakage |
| | 2.8 | | Electrical fault or malfunction |
| | 0.0 | | Stalled motor |
| | 26.8 | | Other |
| | 100.0% | | Total percentage |
| | | | (Number of failures = 71) |
| | % | | Failure contributor |
| | 0.0% | | Persistent overloading |
| | 4.2 | | High ambient temperature |
| | 7.0 | | Abnormal moisture |
| | 0.0 | | Abnormal voltage |
| | 0.0 | | Abnormal frequency |
| | 4.2 | | High vibration |
| | 9.9 | | Aggressive chemical |
| | 43.7 | | Poor lubrication |
| | 1.4 | | Poor ventilation/cooling |
| | 18.3 | | Normal deterioration from age |
| | 11.3 | | Other |
| | 100.0% | | Total percentage |
| | | | (Number of failures = 71) |

Copyright © 1998 IEEE. All rights reserved.

#### 3.2.4.6 Other significant results

Several additional parameters were reported in (O'Donnell [B18]) in terms of their effect on the failure rate of motors above 200 hp. These included the effect of horsepower, speed, enclosure, environment, duty cycle, service factor, average number of starts per day, grounding practice, maintenance quality, maintenance cycle, type of maintenance performed, and months since last maintenance prior to the failure. Some combinations of these parameters, two at a time, have also been studied and reported (see O'Donnell [B18]).

##### 3.2.4.6.1 Open vs. enclosed motors

The following significant conclusions were reached:

a) Open motors had a higher failure rate than weather-protected or enclosed motors.
b) Indoor motors had a higher failure rate for open motors than for weather-protected or enclosed motors.
c) Outdoor motors had a lower failure rate than indoor motors because most outdoor motors were weather protected or enclosed, and most indoor motors were open.

##### 3.2.4.6.2 Service factor

The 1.15 Service Factor (S.F.) induction motors had a higher reported failure rate than 1.0 S.F. induction motors, but the opposite was true for synchronous motors.

##### 3.2.4.6.3 Speed and horsepower

The failure rate for induction motors did not vary significantly among the three speed categories (i.e., 0–720 r/min, 721–1800 r/min, and 3600 r/min). The highest failure rate was in the middle speed category, while the lowest failure rate was in the 3600 r/min category. The 201–500 hp induction motors had approximately the same failure rate as 501–5000 hp induction motors in each of the three speed ranges studied.

Synchronous motors in the speed category 0–720 r/min had a higher failure rate than synchronous motors in the 721–1800 r/min category. There were no respondents for the 3600 r/min category.

#### 3.2.4.7 Data supports chemical industry motor standard

Reliability data for induction motors from both the 1983 IEEE survey and the 1973-74 IEEE survey (see Appendixes A and B) supported the need for several of the features incorporated into IEEE Std 841-1994 [B2]. The IEEE surveys show the need for improved reliability of bearings and windings and, in some cases, the need for better physical protection against aggressive chemicals and moisture. Some of the more significant recommendations for an IEEE Std 841-1994 [B2] motor include

a) TEFC enclosure
b) Maximum 80 ˚C rise at 1.0 service factor

 Copyright © 1998 IEEE. All rights reserved.

c) Contamination protection for bearings and grease reservoirs
d) Three-year continuous L-10 bearing life
e) Maximum bearing temperature of 45 ˚C rise (50 ˚C rise on two-pole motors)
f) Cast iron frame construction
g) Non-sparking fan
h) Single connection point per phase in terminal box
i) Maximum sound power level of 90 dBA
j) Corrosion-resistant paint, internal joints and surfaces, and hardware

IEEE Std 841-1994 [B2] was tailored for the petroleum/chemical industry; however, it can be beneficial for other industries with similar requirements.

#### 3.2.4.8 Comparison of 1983 motor survey with other motor surveys

One of the primary purposes of comparing the results of 1983 motor survey with previous surveys and other surveys (see Albrecht et al., [B4], [B5], and Doble Conference [B29]) is to attempt to identify trends in the failure characteristics of motors (i.e., changing failure rates with time, varying causes of motor failures, assessing the impact of maintenance practices, etc.).

##### 3.2.4.8.1 1983 EPRI and 1983–85 IEEE surveys

The size and scope of the IEEE Working Group and EPRI motor surveys is shown in Table 3-21. The motor failure rate of 0.035 failures per unit-year in the EPRI sponsored study of the electric utility industry is about *half* the IEEE failure rate of 0.0708 failures per year.

The percentage of motor failures classified by component in the two surveys is shown in Table 3-22. Similar results were obtained in these two studies on the failed component, with bearing. winding, and rotor-related percentages that were each about the same.

Table 3-23 shows some differences between the two studies on the causes of failures. The IEEE survey found “inadequate maintenance,” “poor installation/testing,” and “misapplication” to be a significant larger percentage of the causes of motor failures; while the EPRI study attributed a larger percentage to the manufacturer. In addition, the EPRI study had a much larger percentage of failures attributed to “other or not specified.” Additional results from the EPRI sponsored study were given in a later paper (see Albrecht et al., [B5]).

##### 3.2.4.8.2 1982 Doble data and 1983–85 IEEE surveys

A 1982 Doble Survey (see Doble Conference [B29]) in the electric utility industry (for motors 1000 hp and up and not over 15 years of age) reported 68 insulation-related failures in 2078 unit-years of service during the year 1981. This gives an insulation-related failure rate of 0.033 failures per unit-year. This can be compared with a winding failure rate of 26% times 0.0708, which equals 0.018 failures per unit-year that can be calculated from the l983–85 IEEE survey of motors above 200 hp and not older than 15 years in Tables 3-21 and 3-22.

Copyright © 1998 IEEE. All rights reserved.

**Table 3-21—Size and scope comparison of IEEE 1983–85 motor survey (O'Donnell [B18]) and EPRI sponsored motor survey in electric utility power plants (Albrecht et al., [B4])**

| Parameter | IEEE Working Group | EPRI Phase I |
|---|---|---|
| Horsepower | > 200 | 100 and up |
| Number of companies/utilities | 33 | 56 |
| Number of plants or units | 75 | 132 |
| Number of motors | 1141 | 4797 |
| Total population (unit-years) | 5085 | 24 9141[a] |
| Total failures | 360 | 8711[a] |
| Failure rate (all motors) | 0.0708 | 0.035[a] |

[a]To first failure.

**Table 3-22—Failure by component comparison of the IEEE 1983–85 motor survey ( O'Donnell [B18]) and EPRI sponsored survey ( Albrecht et al., [B4])**

(Percentage of failures)

| IEEE Working Group | EPRI Phase I |
|---|---|
| 44% Bearings | 41% Bearing related |
| 26% Windings | 37% Stator related |
| 8% Rotor/Shafts/Couplings | 10% Rotor related |

### 3.2.4.8.3 IEEE Surveys 1973–74 and 1983–85

Table 3-24 shows the results from the 1973–74 IEEE motor reliability survey of industrial plants (see IEEE Committee Report [B16]). This survey covered motors 50 hp and larger, and had no limit on the age of the motor. Those results can be compared to Table 3-15 for the 1983–85 IEEE survey of motors above 200 hp and not older than 15 years. The 1983–85 failure rates of induction motors and synchronous motors were about double those from the 1973–74 survey for motors 601–15 000 V.

 Copyright © 1998 IEEE. All rights reserved.

**Table 3-23—Cause of failure comparison—IEEE 1983–85 motor survey (O'Donnell [B18]) and EPRI sponsored motor survey (Albrecht et al., [B4])**

| Failure cause | EPRI Phase I | | IEEE Working Group | | Failure cause |
|---|---|---|---|---|---|
| | Number | Percent | Number | Percent | |
| Manufacturer design workmanship | 401 | 32.8% | 62 | 17.2% | Defective component |
| Misoperation | 124 | 10.2 | 32 | 8.9 | Improper operation/personnel error |
| Misapplication | 83 | 6.8 | 52 | 14.5 | Misapplication<br>Motor-driven equipment mismatch<br>Inadequate electrical protection<br>Inadequate physical protection |
| — | | | 66 | 18.3% | Inadequate maintenance |
| — | | | 40 | 11.1 | Poor installation/testing |
| — | | | 12 | 3.3 | Outside agency other than personnel |
| — | | | 2 | 0.6 | Improper handling/shipping |
| Other or not specified | 613 | 50.2 | 94 | 26.1 | Other or not specified |
| Total | 1221 | 100.0% | 360 | 100.0% | |

#### 3.2.4.8.4 AIEE 1962 and 1983–85 IEEE surveys

Table 3-25 shows the results from the 1962 AIEE motor reliability survey of industrial plants. This survey covered motors 250 hp and larger and had no limit on the age of the motor. The failure rates for both induction motors and synchronous motors from the 1962 AIEE survey are within 30% of those shown in Table 3-15 for the 1983–85 IEEE survey of motors above 200 hp and not older than 15 years. The two surveys conducted 21 years apart show remarkably similar results.

### 3.2.5 1994 IEEE-PES survey of overhead transmission lines

The IEEE Power Engineering Society conducted an extensive survey of the outages of overhead transmission lines 230 kV and above in the U.S. and Canada (see Adler et al., [B3]).

Copyright © 1998 IEEE. All rights reserved.

**Table 3-24—1973–74 IEEE overall summary for motors 50 hp and larger**

| Number of plants in sample size | Sample size (unit-years) | Number of failures reported | Equipment subclass | Failure rate (failures per unit-year) | Average hours down-time per failure | Median hours down-time per failure |
|---|---|---|---|---|---|---|
| — | 42 463 | 561 | All | 0.0132 | 111.6 | — |
| | | | Induction | | | |
| 17 | 19 610 | 213 | 0–600 V | 0.0109 | 114.0 | 18.3 |
| 17 | 4229 | 172 | 5001–15 000 V | 0.0404 | 76.0 | 153.0 |
| | | | Synchronous | | | |
| 2 | 13 790 | 10 | 1001–5000 V | 0.0007 | 35.3 | 35.3 |
| 11 | 4276 | 136 | 5001–15 000 V | 0.0318 | 175.0 | 153.0 |
| 6 | 558 | 31 | Direct current | 0.0556 | 37.5 | 16.2 |

**Table 3-25—1962 AIEE overall summary for motors 250 hp and larger, U.S. and Canada (Dickinson [B7])**

| Number of plants in sample size | Sample size (unit-years) | Number of failures reported | Equipment subclass | Failure rate (failures per unit-year) | Average hours down-time per failure | Median hours down-time per failure |
|---|---|---|---|---|---|---|
| 46 | 1420 | 140 | Induction | 0.0986 | 78.0 | 70.0 |
| 53 | 600 | 31 | Synchronous | 0.0650 | 149.0 | 68.0 |

This is included as Appendix O and covers 230 kV, 345 kV, 500 kV, and 765 kV and includes both permanent and momentary outages. Line-caused outages have been separated out from terminal-caused outages. Data are given on the type of fault that caused the outage. Faults can result in voltage sags at the entrance to industrial and commercial installations.

## 3.3 Part 2: Equipment reliability surveys conducted prior to 1976

### 3.3.1 Introduction

From 1973 to 1975, the Power Systems Reliability Subcommittee of the IEEE Industrial Power Systems Department conducted and published surveys of electrical equipment reliability in industrial plants (see IEEE Committee Reports [B12], [B16]). Those reliability surveys of electrical equipment and electric utility power supplies were extensive, and summaries of the following pertinent reliability data are given in this subclause:

 Copyright © 1998 IEEE. All rights reserved.

a) Failure rate and outage duration time for electrical equipment and electric utility power supplies
b) Failure characteristic or failure modes of electrical equipment; that is, the effect of the failure on the system
c) Causes and types of failures of electrical equipment
d) Failure repair method and failure repair urgency
e) Method of service restoration after a failure
f) Loss of motor load vs. time of power outage

In addition, reference is made to summaries of pertinent reliability data and information that are contained in other chapters, including:

g) Maximum length of time of an interruption of electrical service that will not stop plant production
h) Plant restart time after service is restored, following a failure that caused a complete plant shutdown
i) Cost of power interruptions to industrial plants and commercial buildings
j) An example showing that the two power sources in a double-circuit utility supply may not be completely independent
k) Equipment failure rate multipliers vs. maintenance quality
l) Percentage of failures caused by inadequate maintenance vs. month since maintained

All of the reliability data summarized in the above twelve items was taken from the IEEE surveys of industrial plants (see Albrecht et al., [B5] and *EEI Publication no. 75-50* [B22]) and commercial buildings (see O'Donnell [B18]). The detailed reports are given in Appendixes A, B, C, and D. A later survey (IEEE Committee Report [B6]) of the reliability of switchgear bus is included in Appendix E. More recent surveys on "transformers," "large motors," and "cable, terminations, and splices" are included in Appendixes G, H, and I, respectively. Recent surveys on circuit breakers are shown in Appendixes J and K. A 1989 survey on diesel and gas turbine generating units is included in Appendix L.

### 3.3.2 Reliability of electrical equipment (1974 survey)

The term "electrical equipment" in this section includes all the electrical equipment listed in Table 3-26.

**Table 3-26—In-plant electrical equipment list**

| Electrical equipment | |
|---|---|
| Circuit breakers (some) | Open wire |
| Motor starters | Cable |
| Disconnect switches—enclosed | Cable joints (some) |
| Bus duct | Cable terminations |

Copyright © 1998 IEEE. All rights reserved.

In compiling the data for the 1974 survey, a failure was defined as any trouble with a power system component that causes any of the following effects:

— Partial or complete plant shutdown, or below-standard plant operation
— Unacceptable performance of user's equipment
— Operation of the electrical protective relaying or emergency operation of the plant electric system
— De-energization of any electric circuit or equipment

A failure on a public utility supply system may cause the user to have either of the following:

— A power interruption or loss of service
— A deviation from normal voltage or frequency outside the normal utility profile

A failure on an in-plant component causes a forced outage on the component, that is, the component is unable to perform its intended function until it is repaired or replaced. The terms "failure" and "forced outage" are often used synonymously.

All of the electrical equipment categories listed in this subclauses have eight or more failures. This is considered an adequate sample size (see Patton [B21]) in order to have a reasonable chance of determining a failure rate within a factor of 2. Failure rate and average downtime per failure data for an additional six categories of equipment are contained in IEEE Committee Report [B16] (see Appendix A).

The additional categories of equipment that have between four and seven failures and thus might be considered by some as too small a sample size include

— Circuit breakers used as motor starters
— Disconnect switches—open
— Cable joints, 601–15 000 V, above ground and aerial
— Cable joints, 601–15 000 V, thermosetting
— Fuses
— Protective relays

#### 3.3.2.1 Failure modes of circuit breakers

The failure modes of "metalclad drawout" and "fixed-type" circuit breakers are shown in Table 3-27. Of primary concern to industrial plants is the large percentage of circuit breaker failures (i.e., 42%) that "opened when it should not." This type of circuit breaker failure can significantly affect plant processes and may result in a total plant shutdown. Also, a large percentage (i.e., 32%) of the circuit breakers "failed while in service (not while opening or closing). Appendixes J and K and (*EEI Publication no. 76–81* [B27]) contain additional detailed information on circuit breaker reliability.

 Copyright © 1998 IEEE. All rights reserved.

**Table 3-27—Failure modes of circuit breakers[a] (1974 survey)**
(Percentage of total failure in each failure mode)

| All circuit breakers % | Metalclad drawout | | | Failed type[b] | | Failure characteristics |
|---|---|---|---|---|---|---|
| | All % | 0–600 V 601–15 000 V % | All sizes % | 0–600 V All sizes % | All % | |
| 5% | 5% | 2% | 7% | 8% | 6% | Failed to close when it should |
| 9 | 12 | 21 | 0 | 0 | 2 | Failed while opening |
| 42 | 58 | 49 | 71 | 5 | 4 | Opened when it should not |
| 7 | 6 | 4 | 9 | 5 | 4 | Damaged while successfully opening |
| 2 | 1 | 0 | 0 | 0 | 4 | Damaged while closing |
| 32 | 16 | 24 | 10 | 77 | 73 | Failed while in service (not while opening or closing) |
| 1 | 0 | 0 | 0 | 0 | 2 | Failed during testing or maintenance |
| 1 | 2 | 0 | 3 | 0 | 0 | Damage discovered during testing or maintenance |
| 1 | 0 | 0 | 0 | 5 | 5 | Other |
| 100% | 100% | 100% | 100% | 100% | 100% | Total percentage |
| 166 | 117 | 53 | 59 | 39 | 48 | Number of failures in total percentage |
| 8 | 7 | 0 | 7 | 1 | 1 | Number not reported |
| 173 | 124 | 53 | 66 | 40 | 49 | Total failures |

[a]Appendix K contains some limited data from a later IEEE survey. Appendix J contains data for circuit breakers above 63 kV from a CIGRE 13-06 worldwide survey with a very large population.
[b]Includes molded case.

#### 3.3.2.1.1 Trip units on low-voltage breakers

Most modern low-voltage power circuit breakers are purchased with a solid-state trip unit rather than an electromechanical trip unit. Many older low-voltage breakers have been retrofitted with a solid-state trip that replaced an electromechanical trip unit. A comparison has been made of the reliability of these two types of trip units. This included both the “trip unit failed to operate” and the “trip unit out of specification.”

A 1996 IEEE Survey was made of low-voltage breaker operation as found during maintenance (see O’Donnell [B19]). This is included as Appendix P. A summary of the most important results is given in Table 3-28. Electromechanical trip units had an unacceptable operation about twice as often as solid state-units.

Copyright © 1998 IEEE. All rights reserved.

**Table 3-28—Survey of low-voltage power breaker operation as found during maintenance tests—electromechanical (EM) vs. solid-state (SS) trip type unit; new solid state units vs. used (older) solid state units**

(Percentage of total failure in each failure mode)

| | Trip unit type | | | |
|---|---|---|---|---|
| | Electromechanical | | Solid-state | |
| | Number of tests | % | Number of tests | % |
| Unacceptable operation | | | | |
| a) Trip unit failed to operate | 81 | 7.7% | 28 | 3.0% |
| b) Trip unit out of specification | 60 | 5.7 | 24 | 2.6 |
| c) Mechanical operations (springs, arms/levers, hardened lubricant) | 26 | 2.5 | 19 | 2.0 |
| d) Power contacts (alignment, incorrect pressure, pitted) | 25 | 2.4 | 19 | 2.0 |
| e) Arc chutes (clean, replace/repair, chipped) | 6 | 0.6 | 6 | 0.7 |
| f) Auxiliary contacts | 4 | 0.4 | | |
| Total unacceptable | 204 | 19.4% | 100 | 10.7% |
| Acceptable operation | 850 | 80.6% | 835 | 89.3% |
| Total number of tests | 1054 | 100.0% | 935 | 100.0% |

### 3.3.2.2 Failure characteristics of other electrical equipment

The failure characteristics of electrical equipment (excluding transformers and circuit breakers) are shown in Table 3-29. The dominant failure characteristic for this equipment is that it "failed in service." A large percentage of the damage to motor starters (i.e., 36%), disconnect switches (i.e., 18%) and cable terminations (i.e., 12%) was discovered during testing or maintenance; however, the remaining electrical equipment did not significantly exhibit this failure characteristic.

### 3.3.2.3 Causes and types of failures of electrical equipment

The following data is presented in Tables 3-30 and 3-31:

a) Failures, damaged part
b) Failure type
c) Suspected failure responsibility
d) Failure-initiating cause
e) Failure-contributing cause

 Copyright © 1998 IEEE. All rights reserved.

**Table 3-29—Failure characteristics of other electrical equipment**

| Motor Starters % | Disconnect switches % | Bus duct % | Open wire % | Cable % | Cable joint % | Cable terminations % | Failure characteristics |
|---|---|---|---|---|---|---|---|
| 37% | 72% | 90% | 68% | 92% | 96% | 80% | Failed in service |
| 6 | 3 | 5 | 2 | 2 | 4 | 2 | Failed during testing or maintenance |
| 36 | 18 | 0 | 1 | 2 | 0 | 12 | Damaged discovered during testing or maintenance |
| 20 | 6 | 5 | 6 | 3 | 0 | 6 | Partial failure |
| 2 | 1 | 0 | 23 | 1 | 0 | 0 | Other |

**Table 3-30—Failure, damaged part, and failure type (1974 survey)**

| Circuit breakers % | Motor starters % | Disconnect switches % | Bus duct % | Open wire % | Cable % | Cable joints % | Cable terminations % | Failure, damaged part |
|---|---|---|---|---|---|---|---|---|
| 0% | 5% | 0% | 15% | 0% | 5% | 0% | 0% | (1) Insulation—winding |
| 2 | 0 | 1 | 10 | 1 | 0 | 0 | 12 | (2) Insulation—bushing |
| 19 | 10 | 14 | 65 | 6 | 83 | 91 | 74 | (3) Insulation—other |
| 1 | 0 | 0 | 0 | 0 | 3 | 0 | 0 | (4) Mechanical—bearings |
| 11 | 16 | 9 | 0 | 0 | 0 | 0 | 0 | (5) Mechanical—other moving parts |
| 6 | 2 | 30 | 0 | 4 | 1 | 0 | 4 | (6) Mechanical—other |
| 6 | 13 | 8 | 0 | 3 | 1 | 0 | 0 | (7) Other electric—auxiliary device |
| 28 | 2 | 1 | 0 | 3 | 1 | 0 | 0 | (8) Other electric—protective device |
| 1 | 0 | 0 | 0 | 0 | 0 | 0 | 0 | (9) Tap changer—no load type |
| 0 | 0 | 0 | 0 | 0 | 0 | 0 | 0 | (10) Tap changer—load type |
| 26 | 52 | 37 | 10 | 83 | 6 | 9 | 10 | (99) Other |
| | | | | | | | | Failure type |
| 33% | 14% | 15% | 70% | 34% | 73% | 70% | 55% | (1) Flashover orarcing involving ground |
| 10 | 20 | 4 | 30 | 23 | 1 | 9 | 4 | (2) All other flashover or arcing |
| 19 | 55 | 47 | 0 | 25 | 7 | 20 | 37 | (3) Other electric defects |
| 11 | 11 | 14 | 0 | 6 | 5 | 0 | 4 | (4) Mechanical defect |
| 27 | 0 | 20 | 0 | 12 | 14 | 0 | 0 | (99) Other |

Copyright © 1998 IEEE. All rights reserved.

The data presented in Table 3-31 indicate that the respondents suspected “inadequate maintenance” and “manufacturer-defective-component” were responsible for a significant percentage of the failures for several categories of electrical equipment.

#### 3.3.2.4 Failure repair method and failure repair urgency

The “failure repair method” and the “failure repair urgency” had a significant effect on the “average downtime per failure.” Table 3-32 shows the percentages of these two parameters for eight classes of electrical equipment. A special study on this subject is reported in Tables 50, 51, 55, and 56 of (Patton [B21]) (see Appendix B) for circuit breakers and cables (see footnote d of Table 3-2 of this chapter).

#### 3.3.2.5 Reliability of electric utility power supplies to industrial plants

The “failure rate” and the “average downtime per failure” of electric utility supplies to industrial plants are given in Table 3-33. Additional details are given in Appendix D of (*EEI Publication no. 75–50* [B22]). A total of 87 plants participated in the IEEE survey covering the period from 1 January 1968 through October 1974.

The survey results shown in Table 3-33 have distinguished between power failures that were terminated by a switching operation vs. those requiring repair or replacement of equipment. The latter have a much longer outage duration time. Some of the conclusions that can be drawn from the IEEE data are

a) The failure rate for single-circuit supplies is about 6 times that of multiple-circuit supplies that operate with all circuit breakers closed; and the average duration of each outage is about 2.5 times as long.
b) Failure rates for multiple-circuit supplies that operate with either a manual or an automatic throwover scheme are comparable to those for single-circuit supplies, but throwover schemes have a smaller average failure duration than single-circuit supplies.
c) Failure rates are highest for utility supply circuits operated at distribution voltages and lowest for circuits operated at transmission voltages (greater than 35 kV).

It is important to note that the data in Table 3-32 shows that the two power sources of a double-circuit utility supply are not completely independent. This is analyzed in an example in 7.1.16, where (for the one case analyzed) the actual failure rate of a double-circuit utility supply is more than 200 times larger than the calculated value for two completely independent utility power sources.

Utility supply failure rates vary widely in various locations. One of the significant factors in this difference is believed to be different exposures to lightning storms. Thus, average values for the utility supply failure rate may not be appropriate for use at any one location. Local values should be obtained, if possible, from the utility involved, and these values should be used in reliability and availability studies.

 Copyright © 1998 IEEE. All rights reserved.

## Table 3-31—Suspected failure responsibility, failure-initiating cause, and failure-contributing cause (1974 survey)

| Circuit breakers % | Motor Starters % | Disconnect switches % | Bus duct % | Open wire % | Cable % | Cable joints % | Cable terminations % | Suspected failure responsibility |
|---|---|---|---|---|---|---|---|---|
| 23% | 18% | 29% | 26% | 0% | 16% | 0% | 0% | (1) Manufacturer—defective component |
| 0 | 0 | 0 | 0 | 0 | 0 | 0 | 0 | (2) Transportation to site—defective handling |
| 4 | 51 | 6 | 16 | 2 | 8 | 0 | 18 | (3) Application engineerng—improper application |
| 3 | 0 | 4 | 5 | 9 | 14 | 50 | 38 | (4) Inadequate installaion and testing prior to startup |
| 23 | 8 | 13 | 16 | 30 | 10 | 18 | 32 | (5) Inadequate maintenance |
| 6 | 3 | 39 | 0 | 2 | 3 | 0 | 0 | (6) Inadequate operating procedures |
| 5 | 0 | 1 | 5 | 5 | 4 | 5 | 0 | (7) Outside agency—personnel |
| 1 | 0 | 0 | 0 | 21 | 6 | 2 | 8 | (8) Outside agency—other |
| 35 | 20 | 8 | 32 | 31 | 39 | 25 | 14 | (9) Other |
| | | | | | | | | Failure-initiating cause |
| 4% | 0% | 8% | 6% | 0% | 0% | 0% | 0% | (1) Persistent overloading |
| 1 | 0 | 3 | 0 | 0 | 0 | 2 | 0 | (2) Above normal temperature |
| 0 | 0 | 1 | 0 | 0 | 0 | 0 | 0 | (3) Below normal temperature |
| 2 | 0 | 0 | 0 | 28 | 14 | 13 | 10 | (4) Exposure to aggressive chemicals or solvents |
| 3 | 0 | 4 | 17 | 1 | 8 | 22 | 12 | (5) Exposure to abnormal moisture or water |
| 0 | 0 | 0 | 0 | 3 | 2 | 0 | 0 | (6) Exposure to non-electrical fire or burning |
| 0 | 0 | 0 | 0 | 0 | 1 | 0 | 0 | (8) Obstruction of ventilation by objects or material |
| 17 | 40 | 5 | 49 | 3 | 30 | 29 | 24 | (9) Normal deterioration from age |
| 1 | 0 | 0 | 11 | 30 | 16 | 2 | 16 | (10) Severe wind, rain, snow, sleet, or other weather conditions |
| 2 | 0 | 0 | 0 | 1 | 0 | 0 | 0 | (11) Protective relay improperly set |
| 1 | 2 | 0 | 0 | 0 | 0 | 0 | 0 | (12) Loss or deficiency of lubricant |
| 0 | 0 | 0 | 0 | 0 | 0 | 0 | 0 | (13) Loss of deficiency of oil or cooling medium |
| 10 | 3 | 0 | 6 | 2 | 3 | 0 | 8 | (14) Misoperation or testing error |
| 3 | 1 | 26 | 0 | 2 | 1 | 0 | 0 | (15) Exposure to dust or other contaminants |
| 56 | 54 | 54 | 11 | 30 | 24 | 32 | 30 | (99) Other |

Copyright © 1998 IEEE. All rights reserved.

**Table 3-32—Failure repair method and failure repair urgency (1974 survey)**

| Circuit breakers % | Motor Starters % | Disconnect switches % | Bus duct % | Open wire % | Cable % | Cable joints % | Cable terminations % | Failure repair method |
|---|---|---|---|---|---|---|---|---|
| 51% | 33% | 30% | 66% | 70% | 47% | 87% | 0% | (1) Repair of failed component in place or sent out for repair |
| 49 | 67 | 70 | 35 | 9 | 53 | 13 | 34 | (2) Repair by replacement of failed component with spare |
| 0 | 0 | 0 | 0 | 21 | 0 | 0 | 6 | (99) Other |
| | | | | | | | | Failure repair urgency |
| 73% | 66% | 20% | 80% | 55% | 66% | 56% | 53% | (1) Requiring round-the-clock all-out efforts |
| 22 | 34 | 80 | 15 | 26 | 28 | 22 | 31 | (2) Requiring repair work only during regular workday, perhaps with ovetime |
| 5 | 0 | 0 | 5 | 0 | 6 | 22 | 16 | (3) Requiring repair work on a non-priority basis |
| 0 | 0 | 0 | 0 | 19 | 0 | 0 | 0 | (99) Other |

An earlier IEEE reliability survey of electric power supplies to industrial plants was published in 1973 and is reported in Table 3 of (Albrecht, et al., [B5]) (see Appendix A). The earlier survey had a smaller data base and is not believed to be as accurate as the one summarized in Table 3-32. The earlier survey of electric utility power supplies had lower failure rates.

### 3.3.2.6 Method of electrical service restoration to plant

The 1973–75 IEEE data on “method of electrical service restoration to plant” is shown in Table 3-34. A percentage breakdown of the method of restoration to plant is ranked as follows:

| | | |
|---|---|---|
| a) | Replacement of failed component with spare | 22% |
| b) | Repair of failed component | 22% |
| c) | Other | 22% |
| d) | Utility service restored | 12% |
| e) | Secondary selection—manual | 11% |
| f) | Primary selection—manual | 7% |
| g) | Primary selection—automatic | 2% |
| h) | Secondary selection—automatic | 2% |
| i) | Network protector operation—automatic | 0% |


Copyright © 1998 IEEE. All rights reserved.

**Table 3-33—IEEE survey of reliability of electric utility supplies to industrial plants (IEEE Committee Report [B12]) (1975 Survey)**

(See Tables II, III, IV, and V in Appendix D for additional details.)

| | Failures per unit-year[a] | | | Average duration (minutes per failure)[a] | | |
|---|---|---|---|---|---|---|
| | $\lambda_S$ | $\lambda_R$ | $\lambda$ | $r_S$ | $r_R$ | $r$ |
| Single-circuit utility supplies | | | | | | |
| Voltage level | | | | | | |
| V ≤ 15 kV | 0.905 | 2.715 | 3.621 | 3.5 | 165 | 125 |
| 15 kV < V ≤ 35 kV | — | 1.657 | 1.657 | — | 57 | 57 |
| V > 35 kV | 0.527 | 0.843 | 1.370 | — | 59 | 37 |
| All | 0.556 | 1.400 | 1.956 | 2.3 | 110 | 79 |
| Multiple-circuit utility supplies (all voltage levels) | | | | | | |
| Switching scheme | | | | | | |
| All breakers closed | 0.255 | 0.057 | 0.312 | 8.5 | 130 | 31 |
| Manual throwover | 0.732 | 0.118[b] | 0.850 | 8.1 | 84[b] | 19 |
| Automatic throwover | 1.025 | 0.171 | 1.196 | 0.6 | 96 | 14 |
| All | 0.453 | 0.085 | 0.538 | 5.2 | 110 | 22 |
| Multiple-circuit utility supplies (all switching schemes) | | | | | | |
| Voltage level | | | | | | |
| V ≤ 15 kV | 0.640 | 0.148 | 0.788 | 4.7 | 149 | 32 |
| 15 kV < V ≤ 35 kV | 0.500 | 0.064[b] | 0.564 | 4.0 | 115[b] | 17 |
| V > 35 kV | 0.357 | 0.067 | 0.424 | 6.1 | 184 | 34 |
| Multiple-circuit utility supplies (all circuit breakers closed) | | | | | | |
| Voltage level | | | | | | |
| V ≤ 15 kV | 0.175 | 0.088[b] | 0.263 | 0.7 | 335[b] | 112 |
| 15 kV < V ≤ 35 kV | 0.342 | 0.019[b] | 0.361 | 7.0 | 120[b] | 13 |
| V > 35 kV | 0.250 | 0.061 | 0.311 | 11.0 | 203 | 49 |

[a]Failure rates $\lambda_S$ and $\lambda_R$ and average durations $r_S$ and $r_R$ are, respectively, rates and durations of failures terminated by switching and by repair or replacement. Unsubscripted rates and durations are overall values.

[b]Small sample size; less than eight failures.

The most common methods of service restoration to plant are replacement of failed component with a spare or the repair of the failed component. The primary selection or secondary selection is used only 22% of the time. This would indicate that most power distribution systems in this IEEE survey were radial.

Copyright © 1998 IEEE. All rights reserved.

### 3.3.2.7 Equipment failure rate multiplier vs. maintenance quality

The relationship between maintenance practice and equipment failures is discussed in detail in Chapter 5. Equipment failure rate multipliers vs. maintenance quality are given in Chapter 5 for transformers, circuit breakers, and motors. These multipliers were determined in a special study (Part 6 of Patton [B21]) (see Appendix B). The failure rate of motors is very sensitive to the quality of maintenance.

The percentage of failures due to “inadequate maintenance” vs. the “time since maintained” is given in Chapter 5 for circuit breakers, motors, open wire, transformers, and all electrical equipment classes combined. A high percentage of electrical equipment failures were blamed on “inadequate maintenance” if there had been no maintenance for more than two years prior to the failure.

### 3.3.2.8 Reliability improvement of electrical equipment in industrial plants between 1962 and 1973

The failure rates for electrical equipment (except for motor starters) in industrial plants appeared to have improved considerably during the 11-year interval between the 1962 AIEE reliability survey (see Dickinson [B7]) and the 1973-74 IEEE reliability survey (see IEEE Committee Report [B16]). Table 3-35 shows how much the failure rates had improved for several equipment categories. These data are calculated from a 1974 report (Albrecht et al., [B4]). In 1962 circuit breakers had failure rates that were 2.5 to 6.0 times higher than those reported in 1973. The largest improvements in equipment failure rates have occurred on cables and circuit breakers. The authors discussed some of the reasons for the failure rate improvements during the 11-year interval. It would appear that manufacturers, application engineering, installation engineering, and maintenance personnel have all contributed to the overall reliability improvement.

The authors also make a comparison between the surveys of the “actual downtime per failure” for all the equipment categories shown in the table in (IEEE Committee Report [B16]). However, in general the “actual downtime per failure” was larger in 1973 than in 1962.

### 3.3.2.9 Loss of motor load vs. time of power outage

A special study was reported in Table 47 of (IEEE Committee Report [B16]) (see Appendix B) on loss of motor load vs. duration of power outages. When the duration of power outages is longer than 10 cycles, most plants lose motor load. However, when the duration of power outages is between 1 and 10 cycles, only about one-third of the plants lose their motor load.

Test results of the effect of fast bus transfers on load continuity are reported in (Averill [B6]). This includes 4 kV induction and synchronous motors with the following type of loads:

a) Forced draft fan
b) Circulating water pump
c) Boiler feed booster pump

 Copyright © 1998 IEEE. All rights reserved.

**Table 3-34—Method of service restoration (1974 survey)**

| | Electric utilities power supplies | Transformers | Circuit breakers | Motor starters | Motors | Generators | Disconnect switches | Switchgear bus—Insulated | Switchgear bus—Bare | Bus duct | Open wire | Cable | Cable joints | Cable terminations | Total |
|---|---|---|---|---|---|---|---|---|---|---|---|---|---|---|---|
| (1) Primary Selective—manual | 1% | 3% | 6% | 0% | 5% | 20% | 0% | 58% | 25% | 20% | 13% | 14% | 28% | 19% | 7% |
| (2) Primary Selective—automatic | 8 | 0 | 1 | 0 | 0 | 0 | 0 | 0 | 5 | 0 | 4 | 5 | 8 | 0 | 2 |
| (3) Secondary Selective—manual | 1 | 25 | 6 | 0 | 14 | 33 | 0 | 17 | 10 | 10 | 2 | 20 | 32 | 23 | 11 |
| (4) Secondary Selective—automatic | 1 | 3 | 8 | 0 | 0 | 0 | 0 | 0 | 0 | 0 | 1 | 0 | 8 | 4 | 2 |
| (5) Network protector operation—automatic | 0 | 0 | 0 | 0 | 0 | 0 | 0 | 0 | 5 | 0 | 0 | 0 | 0 | 0 | 0+ |
| (6) Repair of failed component | 5 | 25 | 11 | 12 | 30 | 20 | 3 | 17 | 20 | 35 | 31 | 42 | 24 | 27 | 22 |
| (7) Replacement of failed component | 2 | 39 | 38 | 10 | 29 | 14 | 77 | 0 | 10 | 35 | 6 | 2 | 0 | 12 | 22 |
| (8) Utility service restored | 81 | 0 | 1 | 0 | 0 | 13 | 0 | 0 | 0 | 0 | 1 | 1 | 0 | 0 | 12 |
| (9) Other | 1 | 5 | 29 | 78 | 22 | 0 | 20 | 8 | 25 | 0 | 42 | 16 | 0 | 15 | 22 |
| Total percentage | 100% | 100% | 100% | 100% | 100% | 100% | 100% | 100% | 100% | 100% | 100% | 100% | 100% | 100% | 100% |
| Total number reported | 171 | 75 | 160 | 68 | 318 | 15 | 69 | 12 | 20 | 20 | 103 | 122 | 25 | 25 | 1204 |

Copyright © 1998 IEEE. All rights reserved.

**Table 3-35—Failure rate improvement factor of electrical equipment in industrial plants during the 11-year interval between the 1962 AIEE survey and the 1973 IEEE survey**

| Equipment category | Failure rate ratio AIEE (1962) / IEEE (1973) |
|---|---|
| Cable | |
| Nonleaded in underground conduit | 9.7 |
| Nonleaded, aerial | 5.8 |
| Lead covered in underground conduit | 3.4 |
| Nonleaded in above-ground conduit | 1.6 |
| Cable joints and terminations | |
| Nonleaded | 5.3 |
| Leaded | 2.0 |
| Circuit breakers | |
| Metalclad drawout, 0–600 V | 6.0 |
| Metalclad drawout, above 600 V | 2.9 |
| Fixed 2.4–15 kV | 2.5 |
| Disconnect switches | |
| Open, above 600 V | 3.4 |
| Enclosed, above 600 V | 1.6 |
| Open wire | 3.4 |
| Transformers | |
| Below 15 kV, 0–500 kVA[a] | 2.0 |
| Below 15 kV, above 500 kVA | 2.0 |
| Above 15 kV | 1.6 |
| Motor starters, contactor type | |
| 0–600 V | 1.3 |
| Above 600 V | 1.3 |

[a]300–750 kVA for 1973.

d) Condensate pump
e) Gas recirculation fan

A list of prior papers on the effect of fast bus transfer on motors is also contained in (see Albrecht et al., [B5]).

### 3.3.2.10 Critical service loss duration time

What is the maximum length of time that an interruption of electrical service will *not* stop plant production? The median value for all plants is 10.0 s. See Table 2-3 in Chapter 2 for a summary of the IEEE survey of industrial plants.

 Copyright © 1998 IEEE. All rights reserved.

What is the maximum length of time before an interruption to electrical service is considered critical in commercial buildings? The median value of all commercial buildings is between 5 and 30 min. See Table 2-3 in Chapter 2 for a summary of the IEEE survey of commercial buildings.

#### 3.3.2.11 Plant restart time

What is the plant restart time after service is restored following a failure that has caused a complete plant shutdown? The median value for all plants is 4.0 h. See Table 2-4 in Chapter 2 for a summary of the IEEE survey of industrial plants.

#### 3.3.2.12 Other sources of reliability data

The reliability data from industrial plants that are summarized are based upon IEEE Committee Report [B16] which was published during 1973–1975. Dickinson's report (see [B7]) is an earlier reliability survey of industrial plants that was published in 1962. Portions of that data are tabulated in 3.2.4.8.4.

Many sources of reliability data on similar types of electrical equipment exist in the electric utility industry. The Edison Electric Institute (EEI) has collected and published reliability data on power transformers, power circuit breakers, metal-clad switchgear, motors, excitation systems, and generators (see *EEI Publications* [B22]–[B28]). Most EEI reliability activities do not collect outage duration time data. The North American Electric Reliability Council (NERC) collects and publishes reliability and availability data on generation prime mover equipment.

Failure rate data and outage duration time data for power transformers, power circuit breakers, and buses are given in (Patton [B21]). These data have come from electric utility power systems.

Very little other published data is available on failure modes of power circuit breakers and on the probability of a circuit breaker not operating when called upon to do so. An extensive worldwide reliability survey of the major failure modes of power circuit breakers above 63 kV on utility power systems has been made by the CIGRE 13-06 Working Group as shown in Appendix J. Failure rate data and failure per operating cycle data have been determined for each of the major failure modes. Outage duration time data has also been collected. In addition, data has been collected on the costs of scheduled preventive maintenance; this includes the manhours per circuit breaker per year and the cost of spare parts consumed per circuit breaker per year.

IEEE Std 500-1984 [B1] is a reliability data manual for use in the design of nuclear power generating stations. The equipment failure rates therein cover such equipment as annunciator modules, batteries and chargers, blowers, circuit breakers, switches, relays, motors and generators, heaters, transformers, valve operators and actuators, instruments, controls, sensors, cables, raceways, cable joints, and terminations. No information is included on equipment outage duration times.

Copyright © 1998 IEEE. All rights reserved.

The Institute of Nuclear Power Operations (INPO) organization operates the Nuclear Plant Reliability Data System (NPRDS), which collects failure data on electrical components in the safety systems of nuclear power plants. Outage duration time data is collected on each failure. The NPRDS data base contains more details than IEEE Std 500-1984, but INPO has followed a policy of not publishing its data.

Very extensive reliability data have been collected for electrical and mechanical equipment used on "offshore platforms" in the North Sea and the Adriatic Sea (see OREDA-92 [B20]). This includes generators, transformers, inverters, rectifiers, circuit breakers, protection equipment, batteries, battery chargers, valves, pumps, heat exchangers, compressors, gas turbines, sensors, cranes, etc. Data have been published on failure rates, number of demands, failures per demand, repair time, and repair manhours. Ten oil companies have participated in this data collection over a period of nine years.

## 3.4 Bibliography

[B1] IEEE Std 500-1984, IEEE Guide to the Collection and Presentation of Electrical, Electronic, Sensing Component, and Mechanical Equipment Reliability Data for Nuclear Power Generating Stations (ANSI).[2]

[B2] IEEE Std 841-1994, IEEE Standard for the Petroleum and Chemical Industry—Severe Duty Totally Enclosed Fan-Cooled (TEFC) Squirrel Cage Induction Motors—Up to and Including 500 hp (ANSI).

[B3] Adler, R. B., Daniel, S. L., Heising, C. R., Lauby, M. G., Ludorf, R. P., White, T. S., "An IEEE survey of U.S. and Canadian overhead transmission outages at 230 kV and above," pp. 21–39, *IEEE Transactions on Power Delivery,* vol. 9, no. 1, Jan. 1994. (See Appendix O.)

[B4] Albrecht, P. F., Appiarius, J. C., Cornell, E. P., Hourghtalling, D. W., McCoy, R. M., Owen, E. L., and Sharma, D. K., "Assessment of the reliability of motors in utility applications," *IEEE Transactions on Energy Conversion*, vol. EC-2, Sep. 1987, pp. 396–406.

[B5] Albrecht, P. F., Appiarius, J. C., Cornell, E. P., Houghtalling, D. W., McCoy, R. M., Owen, E. L., and Sharma, D. K., "Assessment of the reliability of motors in utility applications updated," *IEEE Transactions on Energy Conversion,* vol. EC-1, Mar. 1986, pp. 39–46.

[B6] Averill, E. L., "Fast transfer test on power station auxiliaries," *IEEE Transactions on Power Apparatus and Systems*, vol. PAS-96, May/Jun. 1977, pp. 1004–1009.

[B7] Dickinson, W. H., "Report of reliability of electrical equipment in industrial plants," *AIEE Transactions,* part II, Jul. 1962, pp. 132–151.

[2]IEEE publications are available from the Institute of Electrical and Electronics Engineers, 445 Hoes Lane, P.O. Box 1331, Piscataway, NJ 08855-1331, USA.

 Copyright © 1998 IEEE. All rights reserved.

[B8] Ekstrom, T. E., “Reliability/availability guarantees of gas turbine and combined cycle generating units,” 94 CH34520, Conference Record, *IEEE-IAS Industry Applications Conference*, Oct. 2–5, 1994, Denver, CO, pp. 2209–2225. (See Appendix N.)

[B9] Heising, C. R., Janssen, A. L. J., Lanz, W., Colombo, E., and Dialynas, E. N., “Summary of CIGRE 13-06 Working Group World Wide Reliability Data and Maintenance Cost Data on High Voltage Circuit Breakers Above 63 kV,” 94 CH34520, Conference Record, *IEEE-IAS Industry Applications Conference*, Oct. 2–5, 1994, Denver, CO, pp. 2226–2234. (See Appendix J.)

[B10] IEEE Committee Report. “Cost of electrical interruptions in commercial buildings,” *IEEE-ICPS Technical Conference Record*, 75-CH0947-1-1A, Toronto, Canada, May 5–8, 1975, pp. 124–129. (See Appendix C.)

[B11] IEEE Committee Report. “Reasons for conducting a new reliability survey on power, rectifier, and arc-furnace transformers,” *IEEE-ICPS Technical Conference Record*, May 1979, pp. 70–75.

[B12] IEEE Committee Report. “Reliability of electric utility supplies to industrial plants,” *IEEE-ICPS Technical Conference Record*, 75-CH0947-1-1A, Toronto, Canada, May 5–8 1979, pp. 70–75.

[B13] IEEE Committee Report. “Report of generator reliability survey of industrial plants and commercial buildings,” *IEEE-ICPS Technical Conference Record*, CH1543-8-1A, May 1980, pp. 40–44.

[B14] IEEE Committee Report. “Report of switchgear bus reliability survey of industrial plants,” *IEEE Transactions on Industry Applications*, Mar./Apr. 1979, pp. 141–147. (See Appendix E.)

[B15] IEEE Committee Report. “Report of transformer reliability survey of industrial and commercial buildings,” *IEEE Transactions on Industry Applications*, 1983, pp. 858–866. (See Appendix G.)

[B16] IEEE Committee Report. “Report on reliability survey of industrial plants, Parts 1–6, “*IEEE Transactions on Industry Applications*, Mar./Apr. 1974, pp. 213–252; Jul./Aug. 1974, pp. 456–476; Sep./Oct. 1974, p. 681. (See Appendixes A and B.)

[B17] McWilliams, D.W., Patton, A.D., and Heising, C.R., “Reliability of electrical equipment in industrial plants—Comparison of results from 1959 survey and 1971 survey,” *IEEE-ICPS Technical Conference Record*, 74CH0855-71A, Denver, CO, Jun. 2–6, 1974, pp. 105–112.

[B18] O’Donnell, P., “Report of large motor reliability survey of industrial plants and commercial buildings,” *IEEE Transactions on Industry Applications*, Parts 1 and 2, Jul./Aug. 1985, pp. 853–872; Part 3, Jan./Feb. 1987, pp. 153–158. (See Appendix H.)

Copyright © 1998 IEEE. All rights reserved.

[B19] O'Donnell, P., "Survey of lower voltage breakers as found during maintenance," *IEEE Industrial & Commercial Power Systems Technical Conference*, May, 6–9, 1996, New Orleans, LA. (See Appendix K.)

[B20] OREDA-92. *Offshore Reliability Data*, 2nd Ed.[3]

[B21] Patton, A. D., "Determination and analysis of data for reliability studies," *IEEE Transactions on Power Apparatus and Systems*, vol. PAS-87, Jan. 1968, pp. 84–100.

[B22] "Report on Equipment Availability for 10 Year Period 1965-74," *EEI Publication no. 75-50* (Prime Mover Generation Equipment).

NOTE—These data are now collected and published by the North American Electric Reliability Council (NERC).

[B23] "Report on Excitation System Troubles—1975," *EEI Publication no. 76-78*, Dec. 1976. (Later data have also been published.)

[B24] "Report on Generator Troubles—1975, "*EEI Publication no. 76082*, Dec. 1976. (Later data have also been published.)

[B25] "Report on Metalclad Switchgear Troubles—1975," *EEI Publication no. 76-82*, Dec. 1976. (Later data have also been published.)

[B26] "Report on Motor Troubles—1975," *EEI Publication no. 76-79*, Dec. 1976. (Later data have also been published.)

[B27] "Report on Power Circuit Troubles-1975," *EEI Publication no. 76-81*, Dec. 1976. (Later data have also been published.)

[B28] "Report on Power Transformer Troubles—1975," *EEI Publication no. 76-80*, Dec. 1976. (Later data have also been published.)

[B29] "Summary of Replies to the 1982 Technical Questionnaire on Rotating Machinery (Motors 1000 hp and Up)." *Unpublished Report at Doble Conference*, Apr. 1982, Boston, MA.

[3]Can be purchased from Det Norske Veritas Industri Norge AS, DNV Technica, P.O. Box 300, N-1322 Novik, Norway.

 Copyright © 1998 IEEE. All rights reserved.

# Chapter 4
# Evaluating and improving the reliability of an existing plant

## 4.1 Introduction

The 1974 survey of electrical equipment reliability in industrial plants (see IEEE Committee Report [B4][1]) and subsequent investigations showed the utility supply as being the largest single component affecting the reliability of an industrial plant. (See Table 3 in Appendix A and Table 3-33.) Industrial users may or may not be in a position to improve the utility supply reliability and, as a result, must also focus their attention on critical areas within their own plants. A logical approach to the analysis of options available in the industrial plant (in terms of both utility supply and plant distribution) will lead to the greatest reliability improvement for the least cost. In many instances, reliability improvements can be obtained without any cost by making the proper inquiries.

Most industrial users simply “hook up” to the utility system and do not fully recognize that their requirements can have an impact on how the utility supplies them. A utility is somewhat bound by the system available at the plant site and the investment that can be made per revenue dollar. However, most utilities are willing to discuss the various supply systems that are available to their customers. Many times, an option is available (sometimes with financial sharing between the user and the utility) that will meet the exact reliability needs of an industrial plant.

A thorough and properly integrated investigation of the entire electric system (plant and supply) will pinpoint the components or subsystems having unacceptable reliability. Some important general inquiries are listed below. Many of these questions apply to both the utility and the plant distribution systems.

a) How is the system supposed to operate?
b) What is the physical condition of the electric system?
c) What will happen if faults occur at different points?
d) What is the probability of a failure and its duration?
e) What is the critical duration of a power interruption that will cause significant financial loss? (That is, will a 1 min interruption cost production dollars or merely be an inconvenience?)
f) Is there any fire or health hazard that will be precipitated by an electrical fault or a power loss?
g) Is any equipment vulnerable to voltage dips or surges?

The answers to these and similar questions, if properly asked, can and will result in savings to the industrial user (but only if they are acted upon).

[1]The numbers in brackets preceded by the letter B correspond to those of the bibliography in 4.8.

Copyright © 1998 IEEE. All rights reserved.

A question at this point should be, “How do I get started?” However, another question could be, “Why bother?” The answer to the former question is covered in this chapter, and the answer to the latter question is based on the following analogy. When preparing for a long trip, a motorist will make sure that their car is in good working condition before leaving. The motorist will check the brakes, engine, transmission, tires, exhaust system, etc., to see that they are in good condition and make the required repairs. For the motorist knows that “on-the-road” breakdowns and failures are expensive, time consuming, and can be hazardous. In an industrial plant, an unplanned electrical failure will consume valuable production time as well as dollars and may cause injury to personnel. Circuit breakers, relays, meters, transformers, wireways, etc., need periodic checks and preventive maintenance (see Chapter 5) to improve the likelihood of trouble-free performance. Some plants have been shut down completely by events such as a ballast failure. These “shutdowns” are commonly caused by improper settings in protective devices, circuit breaker contacts that were welded shut, or relays that were not set (or did not react) properly. This chapter shows the plant engineer how to minimize downtime by analyzing the system.

## 4.2 Utility supply availability

Loss of incoming power will cause an interruption to critical areas unless alternate power sources are available. Therefore, the reliability of the incoming power is of paramount importance to the plant engineer. It can be stated that different plants and even circuits within a plant vary in their response to loss of power. In some cases, production will not be significantly affected by a 10 min power interruption. In other cases, a 10 ms interruption will cause significant loss. The plant engineer should assess the plant’s vulnerability and convey his or her requirements to the local utility (as well as to his or her own management). (See 2.2 of Chapter 2 for information on economic loss vs. unavailability of incoming power.)

The local utility should be able to supply a listing of the number, type, and duration of power interruptions over the preceding three to five year period. The utility should also be able to predict the future average performance based on its historical data and planned construction projects. In addition, the utility may be able to supply the “feeder” performance of other circuits near the facility under investigation. A second alternative would be to obtain a diagram of the utility feed and evaluate its availability using Chapter 2 methods. As a last resort, the average numbers in this recommended practice will provide a good base (see Table 3-33).

The utility’s history of interruptions can be compared with recorded plant dollar loss in verifying process vulnerability. By assigning a dollar loss to each interruption, it will be possible to determine a relationship between the duration of a power loss and a monetary loss for a particular industrial plant. When the actual outage cost is higher or lower than would be predicted, the cause of the deviation should be determined (that is, a 15 min power loss at a shift change will be less costly than one during peak production). With a refined cost formula in hand, the cost of available options vs. projected losses can be evaluated.

Occasionally a plant experiences problems at times other than during a recorded outage. These problems may be caused by voltage dips (or, more rarely, voltage surges) that are difficult to trace. With problems such as these, it is necessary to begin recording the exact date

 Copyright © 1998 IEEE. All rights reserved.

and time of these occurrences and ask the utility to search for faults or other system disturbances at (or near) the specific times that they have been recorded. It would be wise to convey the fault times to the utility reasonably soon after the fault (that is, call the following day). It must be emphasized that unless these problems are significant in terms of dollars lost, safety, or frequency (that is, every other day), it is not reasonable to pursue the cause of voltage dips since they are a natural phenomenon in the expansive system operated by a utility. Frequent dips can be caused by large motor starts, welder inrush, or intermittent faults in the plant's distribution system (or even by a neighbor's system).

It is also reasonable to cover "what if" questions with the utility and to weigh their answers in any supply decision. A list of questions include

a) How long will the plant be without power if
   1) The main transformer fails?
   2) The feed to the main transformer fails?
   3) The pole supporting the plant feed is struck by a vehicle and downed?
   4) The utility main line fuse or protector interrupts?
   5) The utility main feed breaker opens for a fault?
   6) The utility substation transformer fails?
   7) The utility substation feeds are interrupted?
b) What kind of response time can be expected from the utility for loss of power
   1) During a lightning storm?
   2) During a low trouble period (that is, under "normal" conditions)?
   3) During a snow or ice storm?
   4) During a heat storm (that is, during long periods of high temperatures)?
c) What should be done when the plant experiences an interruption?
   1) Who should be called? A name and number should be made available to *all* responsible personnel. Alternates and their numbers should also be included.
   2) What information should be given to those called?
   3) How should plant people be trained to respond?
   4) Can plant personnel restore power by switching utility lines, and who should be contacted to obtain permission to switch?
d) Are there any better performing feeds near the plant, and what is the cost of extending them to the plant? (That is, is a spare feed available and what is the cost to make it available?)
   1) Is this additional feed from the same station or from another station?
   2) What is the probability (frequency and duration) of both the main and the spare feeds being interrupted simultaneously?
   3) What is the reliability improvement obtained from the additional (or alternate) feed?
e) Will the utility's protective equipment coordinate with the plant's service circuit breaker? If not, what can be done to coordinate these series protective devices?
f) What is the available short-circuit current, and are there plans to change the system so as to affect the short-circuit current?

The above questions may not apply to all plants, but should be matched with specific plant requirements.

Copyright © 1998 IEEE. All rights reserved.

There is an important fact to consider when a multiple-ended feed is being considered. While service is maintained for a loss of one of the feeds, a voltage depression will be seen until the fault is cleared by proper relay action. Therefore, the plant will see a voltage dip for *any* faults on *all* incoming feeds. If the plant is affected with equal severity by either a voltage dip or a short-duration (several seconds) interruption, a multiple-ended supply (with secondary tie) may actually worsen plant reliability. This is just one example of the need to carefully evaluate the current supply situation in conjunction with the net improvement of various proposals.

## 4.3 Where to begin—the plant one-line diagram

The "blueprint" for electrical analysis is the *one-line diagram*. The existence of a one-line diagram is essential for any plant electrical engineer, manager, or operator. It is the "road map" to any part of the electric system. In fact, a one-line diagram should exist (or be prepared) even if the ensuing analysis is not done.

The one-line diagram should begin at the incoming power supply. Standard IEEE symbols should be used in representing electrical components (see IEEE Std 315-1975 [B3]). It is usually impractical to show all circuits in a plant on a single schematic; so the initial one-line diagram should show only major components, circuits, and panels. More detailed analysis may be required in critical areas (described later), and additional one-line diagrams should be prepared for these areas as required.

Since an analysis is being made from the one-line diagram, the type, size, and rating of each device as well as its unavailability should be shown on the diagram. The diagram should include at least the following information:

- Incoming lines (voltage and size—capacity and rating)
- Generators (in plant)
- Incoming main fuses, potheads, cutouts, switches and main and tie breakers
- Power transformers (rating, winding connection, and grounding means)
- Feeder breakers and fused switches
- Relays (function, use, and type)
- Potential transformers (size, type, and ratio)
- Current transformers (size, type, and ratio)
- Control transformers
- All main cable and wire runs with their associated isolating switches and potheads (size and length of run)
- All substations, including integral relays and main panels and the exact nature of the load in each feeder and on each substation

The one-line diagram may show planned, as well as actual, feeder circuit breaker and substation loads (actual measurements should be taken). In most industrial plants, load is added (or deleted) in small increments, and the net effect is not always seen until some part of the system becomes overloaded (or underloaded). Many times, circuits are added without appropriate modification of the standard settings on the associated upstream circuit breakers. In addition, original designs may not have included special attention to the critical areas of

 Copyright © 1998 IEEE. All rights reserved.

production. With these thoughts in mind, the following information should be added to the one-line diagram:

— The original system should be identified. The exact nature of the new loads and their approximate locations should be noted.
— Critical areas of the system should be highlighted.
— The component reliability numbers from Chapter 3 should be inserted so that the reliability performance of the plant can be analyzed on an "if new" basis. (It is preferable to use numbers indigenous to a particular plant whenever this information is available.)

The above information may be too voluminous for clear representation on a single drawing. It may, therefore, be advantageous to include the incoming supply and main feeder circuit breakers (at least) and even major equipment (very large motors or groups requiring the entire capacity of a main feeder position) on one diagram. The load end of the feeders can be detailed on one or more subsequent drawings. After completion of the one-line diagrams, a comprehensive analysis can begin. However, the general inspection covered in 4.4 can, and should, be made concurrent with the preparation of a plant one-line diagram.

The one-line diagram is a picture of an ever-changing electric system. The efforts in preparing the diagram and analyzing the system should, therefore, be augmented by a means to capture new pictures of the system (or of proposed systems) as changes are made (or proposed). Therefore, a procedure should be formalized to ensure that all proposals undergo reliability scrutiny (as well as one-line diagram update), and that their effect on the total system is analyzed before the proposal is approved. This process not only maintains the integrity, but it also minimizes expense by more effective utilization of existing electrical facilities.

## 4.4 Plant reliability analysis

An inspection analysis of the physical condition of a plant's distribution system can be utilized (hopefully on a continual basis) to improve plant reliability (see Chapter 5). The following inspection requires little, if any, capital investment while providing a favorable increase in reliability:

a) Equipment should be periodically checked for proper condition, and programs should be initiated for preventive maintenance procedures as required. (See Chapter 5 for further information.)
    1) Oil in transformers and circuit breakers should be periodically checked for mineral, carbon, and water content as well as level and temperature.
    2) Molded case circuit breakers should be exercised periodically (that is, operated "on" to "off" to "on").
    3) Terminals should be tightened. Each terminal should be inspected for discoloration (overheating), which is generally caused by either a bad connection or equipment overload. Cabinets, etc., should be checked for excessive warmth. Remember that circuit breakers and fuses interrupt as a result of heat in the overload mode.
    4) Surge arresters should be checked for their readiness to operate.

Copyright © 1998 IEEE. All rights reserved.

b) Distribution centers should be checked to see that spare fuses are available. Spare circuit breakers may also be necessary for odd sizes or special applications.
c) Switches, disconnect switches, bus work, and grounds should be checked for corrosion, and unintentional entry of water or corrosive foreign material. It may be wise to operate suspected switches to see that their mechanisms are free, so that faults can be properly isolated and switches safely re-fused.
d) The mechanical part of the electrical system should be checked.
    1) The conduit, duct, cable tray, and busway systems should be well supported mechanically, and the grounding system should be electrically continuous. Employees can be shocked or injured if a circuit faults to ground without a solid continuous return path to the source interrupter. Supports, such as wood poles, should be checked for excessive rusting or rotting, which would significantly reduce their mechanical strength.
    2) Open wire circuits should be checked for insulator and surge arrester failure and contamination.
    3) The system's key locations (open area distribution centers and lines) should be checked for foreign growth, such as trees, weeds, shrubs, etc., as well as for general accessibility. The distribution centers should be free from storage of trash, flammables, or even general plant inventory.
    4) Permanent and portable wiring should be checked for fraying or other loss of insulating value.
    5) In general, the system should be checked for any obvious situations where accidents could precipitate an interruption.
e) The electrical supply room(s) should be thoroughly checked.
    1) The relay and control power fuses should be intact (not blown).
    2) All indicating lights should be operable and clearly visible.
    3) All targets should be reset so that none show a tripping. Counters (if any) should be checked and the count (number) should be recorded.
    4) The control power, batteries, emergency lighting, and emergency generation should be tested and checked to see that they are operational. In many cases, plants have been unable to transfer to their spare circuit or start their standby generator because of dead batteries.
f) Switches, conduits, busways, and duct systems should be checked for overheating. This could be caused by overloaded equipment, severely unbalanced loads, or poor connections.

## 4.5 Circuit analysis and action

The first subsequent investigation, following completion of the plant one-line diagram is the analysis of the system to pinpoint design problems. Key critical or vulnerable areas, and overdutied or improperly protected equipment can be located by the following procedure:

a) Assign faults to various points in the system and note their effect on the system. For example, assume that the cable supply to the air conditioning compressor failed. How long could operations continue? Is any production cooling involved? Are any

 Copyright © 1998 IEEE. All rights reserved.

computer rooms cooled by this system? What would happen if a short circuit (or ground fault) occurred on the secondary terminals of a unit substation? Consideration should be given to relay action (including backup protection), service restoration procedures, etc., in this "what if" analysis. This review could be called a failure mode and effects analysis (FMEA).

b) Calculate feeder loads to verify that all equipment is operating within its rating (do not forget current transformers and other auxiliary equipment). Graphic or demand ammeters (as required) should be used to gather up-to-date information. Fault duties should also be considered (see Chapter 5 in IEEE Std 141-1993 [B1]).

c) Perform a relay coordination analysis (see IEEE Std 242-1986 [B2] or Chapter 4 in IEEE Std 141-1993 [B1]).

   1) Are the relays and fuses properly set or rated for the current load levels?

   2) Is there any new load that has reduced critical circuit reliability (or increased vulnerability)?

Obviously, overloaded equipment should be replaced or load transferred so that the equipment can be operated well within its rating. The major projection points—outside the critical areas—should be capable of keeping the system intact by clearing faults and allowing the critical process to continue. The probability of jeopardizing the critical circuits by extraneous electrical faults should be minimized, either by physically isolating the critical circuits or by judicial use and proper maintenance of protective devices to electrically sever and isolate faults from critical circuits.

With isolation criteria secure, the investigation should move to the critical circuits themselves to see that proper backup equipment is available and that restoration procedures are adequate. For example, a conveyer system with large rollers may have one motor for each roller, or several hundred motors. The failure rate is 0.0109 per unit year for the motors, or 2 motor failures can be expected annually for a plant with 200 motors. The typical downtime is 65 h (but could be less for this specific example). In this case, there should be a means of separating the motor from the systems and allowing the conveyer system to continue operation (possibly allowing the roller to idle until the end of a shift), and several spare motors should be available to minimize downtime.

Most plants have a population of motors large enough to expect several failures per year. The large variety usually precludes the maintenance of a spare motor stock (although their availability can be checked with local distributors). Highly critical nonstandard equipment may require spares. However, each component of the electric system should be viewed in its relationship to the critical process and downtime. (Relay or fuse coordination again plays an important role here.)

The worth of carrying spare parts should be carefully weighed when long process interruptions could result from a single component failure.

Copyright © 1998 IEEE. All rights reserved.

## 4.6 Other vulnerable areas

In many plants, the major process is controlled by a small component. This component may be a rectifier system, a computer, or a magnetic or punched-tape system. The continuity of the electric feed to this controller is just as important to the process as the main machine itself. By proper application of power sources within the device (usually large banks of capacitors) or external uninterruptible power sources, the control can cause the equipment to go into a "safe-hold" position if the power source is interrupted. This continuity (availability) is important to note when thousands of dollars worth of products are being machined in one operation (such as in the aircraft industry). The accuracy and efficacy of a computer or a computer-based process is directly related to the "quality" of its environment. This quality is determined by more than just the continuity of the electric supply. Voltage dips, line noise, ineffective grounding, extraneous electrical and magnetic fields, temperature changes, and even excessively high humidity can adversely affect the accuracy of a computer (or to a lesser extent, a microprocessor). To minimize the probability of errors, the computer should be properly shielded and grounded. It may even be beneficial to install a continuous uninterruptible power supply or transient suppressor equipment on computer circuits where the controlled process is critical.

Testing facilities should have a backup power supply where interruptions could abort long-term testing (that is, tests that span large periods of time). It is important to note that only sufficient power need be supplied to operate the test itself.

Another area of importance is the lighting required for safe operation of the machines. A failure in a particular lighting circuit may reduce the area lighting to a level below what is necessary to maintain a safe watch over production. Two means of overcoming this vulnerability are

a) Emergency task lighting; and
b) Sufficient lighting such that a single circuit outage does not reduce lighting to an unacceptable level.

Another important lighting consideration is the fact that some metal halide lights (HID) require as long as 15 min to restart after being extinguished. Since even severe voltage dips can extinguish this type of lighting (a dip that may go virtually unnoticed by production equipment), supplementary lighting is necessary when the HID is a primary source of illumination. Other new high output lamps will restart in 1 to 6 min, but this too can cause production problems.

Air, oil, and water systems are frequently important auxiliary inputs upon which production depends. A compressor outage can, for example, cause significant production loss. While failures in these systems are usually mechanical in nature, electrical failures are not uncommon. Pumps are often integral parts of the cooling system in large transformers or even in rectifier circuits, and loss of coolant circulation could either shut down the equipment or significantly reduce production output. Therefore, pumps should be well maintained (mechanically and electrically) when they comprise a significant part of the system, and spare parts may be a wise investment. Ventilation can also be critical to cooling, and ventilator fans are often

 Copyright © 1998 IEEE. All rights reserved.

neglected—until they fail. Hence, periodic maintenance and/or spare ventilator motors may be a good investment.

Some plants rely on a single cable to supply their entire electrical requirements, and many plants rely on single cables for major blocks of load. In these cases, it may be prudent to take several precautionary steps. One possible step would be the periodic testing of cables (see Lee [B5]). Another measure would be the use of spare cables or the storage of a single "portable" cable with permanently made ends (and provisions for installing the portable cable at the various cable terminations in the plant distribution system). Lastly, *advance* (documented) arrangements could be made with a local contractor or the local utility for use of their portable cables (and/or services) on an emergency basis.

Premature equipment failure can result from electrical potential that is either too high, too low, excessively harmonic laden, or unbalanced (and also a combination of any or all of these). Voltage tolerances are fairly well established by NEMA and ANSI. However, in (Linders [B6]), a means is provided to evaluate a situation where more than one area deviates from rating. It must be noted that some situations are offsetting, such as a high voltage (less than 10% high) and unbalanced voltage.

It is important to record and log voltage levels (of all three phases) at various strategic points on a periodic basis (that is, annually) and to occasionally determine the harmonic content in the plant's distribution system. The widespread use of solid-state switching devices has caused an increase in harmonic content in the plant power, but it has been unofficially reported that such devices must approach 50% of the plant load before significantly detrimental effects occur. However, the engineer must look at harmonic content in conjunction with other criteria to determine whether there is cause for a significant loss of life in his or her equipment. Filter circuits are generally used to remove harmful harmonics, and their nature is beyond the scope of this recommended practice. Fluorescent lighting also produces harmonics, but these harmonics are "blocked" by the use of delta–wye transformers.

## 4.7 Conclusion

The plant engineer should analyze his or her system electrically and physically and inquire about the utility's system. In this analysis, the engineer should

a) See that faults are properly isolated and that critical loads are not vulnerable to interruption or delayed repair.
b) Analyze the critical areas and evaluate the need for special restoration equipment, spare parts, or procedures.
c) Based on probability and economic analysis, make capital or preventive maintenance investments as indicated by the analysis.
d) Make carefully documented contingency (catastrophe) plans.
e) Check the quality of the power supply from the utility and throughout the plant to determine if the equipment is vulnerable to premature failure.
f) Develop preventive maintenance, checking, and logging procedures to ensure continuous optimum reliability performance of the plant.

Copyright © 1998 IEEE. All rights reserved.

## 4.8 Bibliography

[B1] IEEE Std 141-1993, IEEE Recommended Practice for Electric Power Distribution for Industrial Plants (ANSI).[2]

[B2] IEEE Std 242-1986 (Reaff 1991), IEEE Recommended Practice for Protection and Coordination of Industrial and Commercial Power Systems (ANSI).

[B3] IEEE Std 315-1975 (Reaff 1989), IEEE Standard Graphic Symbols for Electrical and Electronics Diagrams (ANSI).

[B4] IEEE Committee Report.,"Report on reliability survey of industrial plants," Parts 1–6, *IEEE Transactions on Industry Applications,* vol. IA-10, Mar./Apr., Jul./Aug., Sep./Oct. 1974, pp. 213–252, 456–476, 681.

[B5] Lee, R., "New developments in cable system testing," *IEEE Transactions on Industry Applications*, vol. IA-13, May/Jun. 1977.

[B6] Linders, J. R., "Effects of power supply variations on AC motor characteristics," *IEEE Transactions on Industry Applications*, vol. IA-8, Jul./Aug. 1972, pp. 383–400.

[2]IEEE publications are available from the Institute of Electrical and Electronics Engineers, 445 Hoes Lane, P.O. Box 1331, Piscataway, NJ 08855-1331, USA.

 Copyright © 1998 IEEE. All rights reserved.

# Chapter 5
# Electrical preventive maintenance

## 5.1 Introduction

The objective of this chapter is to examine the "why" of electrical preventive maintenance and the role it plays in the reliability of distribution systems for industrial plants and commercial buildings. Details of "when" and "how" can be obtained from other sources (see NFPA 70B-1994 [B6], Curdts [B7], *Factory Mutual Systems Transformer Bulletin* [B8], Hubert [B10], IEEE Committee Report [B11], *Maintenance Hints* [B12], Miller [B13], Shaw [B14], and Smeaton [B15]).[1]

Of the many factors involved in reliability, electrical preventive maintenance often receives meager emphasis in the design phase and operation of electric distribution systems when it can be a key factor in high reliability. Large expenditures for electric systems are made to provide the desired reliability; however, failure to provide timely, high-quality preventive maintenance leads to system or component malfunction or failure and prevents obtaining the intended design goal.

## 5.2 Definitions

The following terms, defined in Chapter 1, should be used in conjunction with this chapter: *electrical equipment* and *electrical preventive maintenance.*

## 5.3 Relationship of maintenance practice and equipment failure

The Reliability Subcommittee of the IEEE Industrial and Commercial Power Systems Committee published the results of a survey that included the effect of maintenance quality on the reliability of electrical equipment in industrial plants (see IEEE Committee Report [B11]). Each participant in the survey was asked to give their opinion of the maintenance quality in his or her plant. A major portion of the electrical equipment covered in the survey had a maintenance quality that was classed as "excellent" or "fair." Interestingly, maintenance quality had a significant effect on the percentage of all failures blamed on "inadequate maintenance."

As shown in Table 5-1, of the 1469 failures reported from all causes, "inadequate maintenance" was blamed for 240, or 16.4% of all the failures.

The IEEE data also showed that "months since maintenance" is an important parameter when analyzing failure data of electrical equipment. Table 5-2 shows data of failures caused by inadequate maintenance for circuit breakers, motors, open wire, transformers, and all equipment classes combined. The percent of failures blamed on "inadequate maintenance"

[1]The numbers in brackets preceded by the letter B correspond to those of the bibliography in 5.6.

Copyright © 1998 IEEE. All rights reserved.

**Table 5-1—Number of failures vs. maintenance quality for all equipment classes combined**

| Maintenance quality | Number of failures | | Percent of failures due to inadequate maintenance |
|---|---|---|---|
| | All causes | Inadequate maintenance | |
| Excellent | 311 | 36 | 11.6% |
| Fair | 853 | 154 | 18.1% |
| Poor | 67 | 22 | 32.8% |
| None | 238 | 28 | 11.8% |
| Total | 1469 | 240 | 16.4% |

shows a close correlation with “failure, months since maintained.”

**Table 5-2—Percentage of failure caused from inadequate maintenance vs. month since maintained**

| Failure, (months maintained) | All electrical equipment classes combined | Circuit breakers | Motors | Open wire | Trans-formers |
|---|---|---|---|---|---|
| Less than 12 months ago | 7.4% | 12.5%[a] | 8.8% | 0[a] | 2.9%[a] |
| 12–24 months ago | 11.2% | 19.2% | 8.8% | 22.2%[a] | 2.6%[a] |
| More than 24 months ago | 36.7% | 77.8% | 44.4% | 38.2% | 36.4% |
| Total | 16.4% | 20.8% | 15.8% | 30.6% | 11.1% |

[a]Small sample size; less than seven failures caused by inadequate maintenance.

From the IEEE data obtained, it was possible to calculate “failure rate multipliers” for transformers, circuit breakers, and motors based upon “maintenance quality.” These “failure rate multipliers” are shown in Table 5-3 and can be used to adjust the equipment failure rates shown in Chapter 3. “Perfect” maintenance quality has zero failures caused by inadequate maintenance.


Copyright © 1998 IEEE. All rights reserved.

**Table 5-3—Equipment failure rate multipliers vs. maintenance quality**

| Maintenance quality | Transformers | Circuit breakers | Motors |
|---|---|---|---|
| Excellent | 0.95 | 0.91 | 0.89 |
| Fair | 1.05 | 1.06 | 1.07 |
| Poor | 1.51 | 1.28 | 1.97 |
| All | 1.0 | 1.0 | 1.0 |
| Perfect maintenance | 0.89 | 0.79 | 0.84 |

## 5.4 Design for electrical preventive maintenance

Electrical preventive maintenance should be a prime consideration for any new electrical equipment installation. Quality, installation, configuration, and application are fundamental prerequisites in attaining a satisfactory preventive maintenance program. A system that is not adequately engineered, designed, and constructed will not provide reliable service, regardless of how good or how much preventive maintenance is accomplished.

One of the first requirements in establishing a satisfactory and effective preventive maintenance program is to have good quality electrical equipment that is properly installed. Examples of this are as follows:

a) Large exterior bolted covers on switchgear or large motor terminal compartments are not conducive to routine electrical preventive maintenance inspections, cleaning, and testing. Hinged and gasketed doors with a three-point locking system would be much more satisfactory.

b) Space heater installation in switchgear or an electric motor is a vital necessity in high humidity areas. This reduces condensation on critical insulation components. The installation of ammeters in the heater circuit is an added tool for operating or maintenance personnel to monitor their operation.

c) Motor insulation temperatures can be monitored by use of resistance temperature detectors, which provide an alarm indication at a selected temperature (depending on the insulation class). Such monitoring indicates that the motor is dirty and/or air passages are plugged.

The distribution system configuration and features should be such that maintenance work is permitted without load interruption or with only minimal loss of availability. Often, equipment preventive maintenance is not done or is deferred because load interruption is required to a critical load or to a portion of the distribution system. This may require the installation of alternate electrical equipment and circuits to permit routine or emergency maintenance on one circuit while the other one supplies the critical load that cannot be shutdown.

Copyright © 1998 IEEE. All rights reserved.

Electrical equipment that is improperly applied will not give reliable service regardless of how good or how much preventive maintenance is accomplished. The most reasonably accepted measure is to make a corrective modification.

## 5.5 Electrical equipment preventive maintenance

Electrical equipment deterioration is normal. However, if unchecked, the deterioration can progress and cause malfunction or an electrical failure. Electrical equipment preventive maintenance procedures should be developed to accomplish four basic functions: to keep the equipment clean, dry, and sealed tight, and to minimize the friction. Water, dust, high or low ambient temperature, high humidity, vibration, component quality, and countless other conditions can affect proper operation of electrical equipment. Without an effective electrical preventive maintenance program the risk of a serious electrical failure increases.

A common cause of electrical failure is dust and dirt accumulation and the presence of moisture. This can be in the form of lint, chemical dust, day-to-day accumulation of oil mist and dirt particles, etc. These deposits on the insulation, combined with oil and moisture, become conductors and are responsible for tracking and flashovers. Deposits of dirt can cause excessive heating and wear, and decrease apparatus life. Electrical apparatus should be operated in a dry atmosphere for best results, but this is often impossible; therefore, precautions should be established to minimize entrance of moisture. Moisture condensation in electrical apparatus can cause copper or aluminum oxidation and connection failure.

Loose connections are another cause of electrical failures. Electrical connections should be kept tight and dry. Creep or cold flow is a major cause of joint failure. Mounting hardware and other bolted parts should be checked during routine electrical equipment servicing.

Friction can affect the freedom of movement of electrical devices and can result in serious failure or difficulty. Dirt on moving parts can cause sluggishness and improper electrical equipment operations such as arcing and burning. Checking the mechanical operation of devices and manually or electrically operating any device that seldom operates should be standard practice.

Procedures and practices should be initiated to substantiate that electrical equipment is kept clean, dry, sealed tight, and with minimal friction by visual inspection, exercising, and proof testing. Electrical preventive maintenance should be accomplished on a regularly scheduled basis as determined by inspection experience and analysis of any failures that occur.

An electrical preventive maintenance program certainly will not eliminate all failures, but it will minimize their occurrence. Some of the key elements in establishing a program are as follows:

a) Establish an “equipment service library” consisting of bulletins, manuals, schematics, parts lists, failure analysis reports, etc. The bulletins and manuals are normally provided by the electrical equipment manufacturer. Often they are not taken very seriously after equipment installation and are lost, misplaced, or discarded. It is

 Copyright © 1998 IEEE. All rights reserved.

important to remember that this documentation is vital to develop electrical preventive maintenance procedures and to aid in training.

b) In addition to the above documentation, each in-service failure should be thoroughly investigated and the cause determined and documented. Generally, it will be found that timely and adequate electrical preventive maintenance could have prevented the failure. If correctable by electrical preventive maintenance, the corrective action should be included on the work list. If the failure was caused by a weak component, then all identical equipment should be modified as soon as possible. “Failure analysis” plays a major part in an electrical preventive maintenance program.

c) Provide the training necessary to accomplish the program that has been established. The techniques utilized in performance of an electrical preventive maintenance program are extremely important. The success or failure of it relies on the qualifications and know-how of the personnel performing the work; therefore, training in electrical preventive maintenance techniques is a major objective. Servicing of electrical equipment requires better-than-average skills and special training. Properly trained and adequately equipped maintenance personnel must have a very thorough knowledge of the equipment operation. They must be able to make a thorough inspection and also accomplish repairs. For example, special training in the use of the dc high-potential dielectric tests or megger tests as well as the interpretation of the results may be required.

d) A good record system should be developed that will show the repairs required by equipment over a long period of time. On each regular inspection, variations from normal conditions should be noted. The frequency and magnitude of the work should then be increased or decreased according to an analysis of the data. Avoid performing too much maintenance work as this can contribute to failures. The records should reflect availability of spare parts, service attitude of equipment manufacturers, major equipment failures to date, and time required for repairs, etc. These records are not only useful in planning and scheduling electrical preventive maintenance work; they are also useful in evaluating equipment performance for future purchases.

## 5.6 Bibliography

[B1] IEEE Std C57.106-1991, IEEE Guide for Acceptance and Maintenance of Insulating Oil in Equipment (ANSI).[2]

[B2] IEEE Std 43-1974 (Reaff 1991), IEEE Recommended Practice for Testing Insulation Resistance of Rotating Machinery (ANSI).

[B3] IEEE Std 56-1977 (Reaff 1991), IEEE Guide for Insulation Maintenance of Large Alternating-Current Rotating Machinery [10 000 kVA and Larger] (ANSI).

[B4] IEEE Std 95-1977 (Reaff 1991), IEEE Recommended Practice for Insulation Testing of Large AC Rotating Machinery with High Direct Voltage (ANSI).

[2]IEEE publications are available from the Institute of Electrical and Electronics Engineers, 445 Hoes Lane, P.O. Box 1331, Piscataway, NJ 08855-1331, USA.

Copyright © 1998 IEEE. All rights reserved.

[B5] IEEE Std 450-1995, IEEE Recommended Practice for Maintenance, Testing, and Replacement of Vented Lead-Acid Batteries for Stationary Applications (ANSI).

[B6] NFPA 70B-1994, Electrical Equipment Maintenance.[3]

[B7] Curdts, E. B., *Insulation Testing by D-C Methods*, Technical Publication 22Tl-1971, James G. Biddle Company, Plymouth Meeting, PA, p. 2.

[B8] *Factory Mutual Systems Transformer Bulletin 14-8*, Oct. 1976. Public Information Division, 1151 Boston-Providence Turnpike, Norwood, MA.

[B9] Gill, A. S., *Electrical Equipment—Testing and Maintenance*, Englewood, Cliffs, NJ: Prentice Hall.

[B10] Hubert, C. I., *Preventive Maintenance of Electrical Equipment*, New York: McGraw-Hill, 1969.

[B11] IEEE Committee Report. Report on Reliability Survey of Industrial Plants, part 6, *IEEE Transactions on Industry Applications*, vol. IA-10, Jul./Aug. and Sep./Oct. 1974, pp. 456–476, 681. (Reprinted in its entirety in Appendix B.)

[B12] *Maintenance Hints*, Westinghouse Electric Corporation, Pittsburgh, PA.

[B13] Miller, H. N., *DC Hypot Testing of Cables, Transformers and Rotating Machinery*, Manual P-16086. Chicago, IL: Associated Research Inc.

[B14] Shaw, E. T., *Inspection and Test of Electrical Equipment*, Pittsburgh, PA: Westinghouse Electric.

[B15] Smeaton, R. W., *Motor Application and Maintenance Handbook*, New York: McGraw-Hill, 1969.

[3]NFPA publications are available from Publication Sales, National Fire Protection Association, 1 Batterymarch Park, P.O. Box 9101, Quincy MA 02269-9101.

 Copyright © 1998 IEEE. All rights reserved.

# Chapter 6
# Emergency and standby power

## 6.1 Introduction

Utilization equipment can be divided into four categories by the reliability requirements of the power supply:

a) Data processing equipment that requires uninterrupted power
b) Safety equipment defined by codes that requires power restoration in seconds
c) Critical equipment that can tolerate an interruption of minutes
d) Noncritical equipment that accepts utility interruption times

## 6.2 Interruption frequency and duration

In the industrial sector, an evaluation of each piece of utilization equipment must be made to determine actual needs. The difference between interruption frequency and duration of supply power must be clearly understood. Interruption frequency is the “expected (average) number of power interruptions to a load per unit time, usually expressed as interruptions per year.” Expected interruption duration is the “average duration of a single load interruption event.” Interruption frequency and duration requirements for control power to a computer control system would certainly be greater than those for a room air conditioner.

Many power-consuming operations require a very low interruption frequency with much less concern for interruption duration. A power failure during the vulcanizing cycle of a rubber manufacturing process will cause loss of steam and errors in the time/temperature control for proper curing. This results in the product being scrapped. The difference in loss between a power failure of 1 min duration and one of 30 min duration is minimal. Thus, a power system that experiences 2 failures of 30 min each is more desirable that a system that experience 6 power failures of 1 min each.

## 6.3 Equipment selection

The components for providing power to utilization equipment to meet reliability requirements exceeding the utility supply include the following:

a) Inverter, batteries
b) Gas turbine or engine-generator sets
c) Transfer switches
d) Static or rotary uninterruptible power supplies

These components are usually employed in redundant configurations to ensure availability when components are out for maintenance, and in case of failure.

Copyright © 1998 IEEE. All rights reserved.

## 6.4 Descriptions and applications of available components

The following information contains data on some commonly used components for emergency and standby power systems.

### 6.4.1 Engine-driven generators

These units are available in sizes from 1 kW to several thousand kilowatts. Fuels commonly used are diesel, oil, gasoline, and natural or liquefied petroleum (LP) gas. If kept warm, they will come dependably on line in 8 to 15 s. Diesel units are generally heavier duty, have less costly fuel, and have lower fire danger than gasoline units. Gasoline-driven units range up to a 100 kW and have a lower initial cost than diesel sets. Natural and LP gas engines provide quick starting after long shutdown periods because of the inherently fresh fuel. Engine-driven generators are used

a) Where utility power is not available.
b) Where an emergency generator is required by code for elevators, emergency lighting, and health care facilities.
c) In conjunction with uninterruptible power supplies.

### 6.4.2 Turbine-driven generators

Two types of turbines can be used for prime movers: either steam or gas. Since steam is generally not available when a power failure has occurred, only the gas prime mover will be discussed.

Gas turbines can utilize various grades of oil as well as natural and propane gas. Sizes generally range from 100 kW to several thousand kilowatts. Gas turbine generators can be placed on line in 20 s for smaller units and in up to several minutes for larger units. They can more easily be rooftop mounted since their physical size and weight per kilowatt are less than for engine-driven units. Turbine-drive generator applications are interchangeable with engine-drive generators.

### 6.4.3 Mechanical stored-energy systems

This type of system is comprised of a rotating flywheel that converts its rotating kinetic energy into electric power, as shown in Figure 6-1. It is generally applied as an on-line system. Depending on the frequency requirements of the load, a typical mechanical-stored energy system can ride through a power failure for up to 2 s. Thus, its main use is as a buffer to mechanically filter out transients.

A supply time of 15 s can be attained by using an eddy current clutch and driving the flywheel at a higher speed than the generator it operates. This type of system may allow an engine-driven prime mover to come up to speed, either to drive a separate generator or to maintain the speed of the flywheel and its associated generator, as illustrated in Figure 6-2.

 Copyright © 1998 IEEE. All rights reserved.

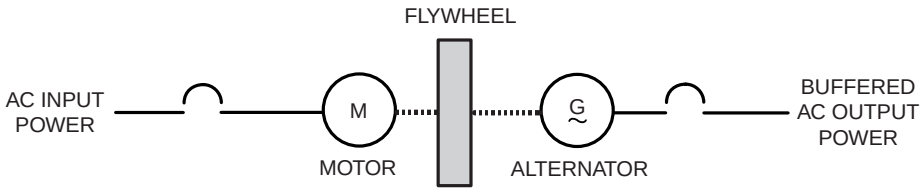


**Figure 6-1—Simple inertia-driven "ride through" system**

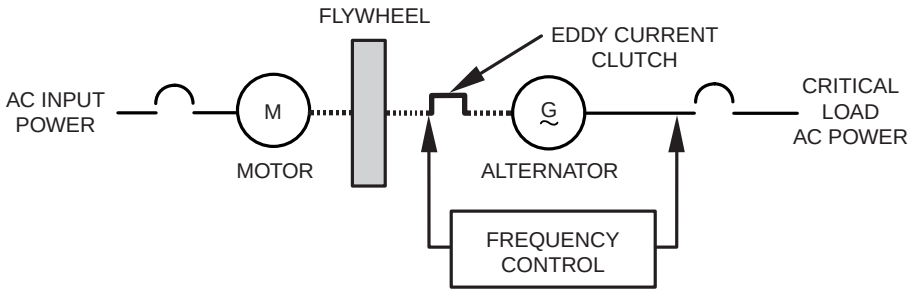


**Figure 6-2—Constant frequency inertia system**

### 6.4.4 Inverter/battery systems

A simple off-line inverter system is shown in Figure 6-3. The static transfer switch enables the system to limit the power interruption to less than 8 ms.

The most widely used system for supplying uninterruptible power is shown in Figure 6-4. The load is basically free of power interruptions, transient disturbances, and voltage and frequency variations. A failure of the inverter will cause a loss of power until the inverter is repaired or until prime power can be connected directly to the load. The system is usually equipped with a static bypass switch that protects the system against inverter failure.

A redundant uninterruptible power supply with static switches to clear a faulted inverter is shown in Figure 6-5. The batteries for this system are required to supply power only until the diesel generators can be placed on line. The "redundant uninterruptible power supply" is more reliable than the "nonredundant uninterruptible power supply" shown in Figure 6-4.

The redundant uninterruptible power supply systems illustrated in Figure 6-5 are often built with up to four modules, where three modules can carry the load.

Copyright © 1998 IEEE. All rights reserved.

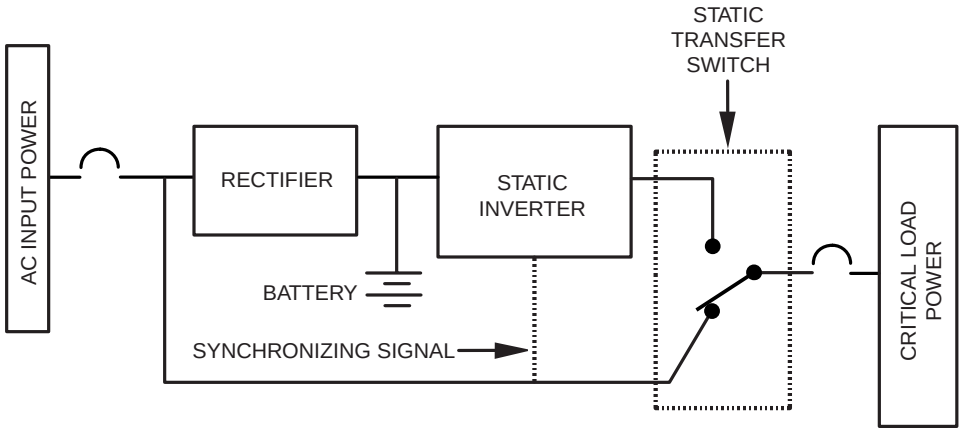


**Figure 6-3—Short interruption static inverter system**

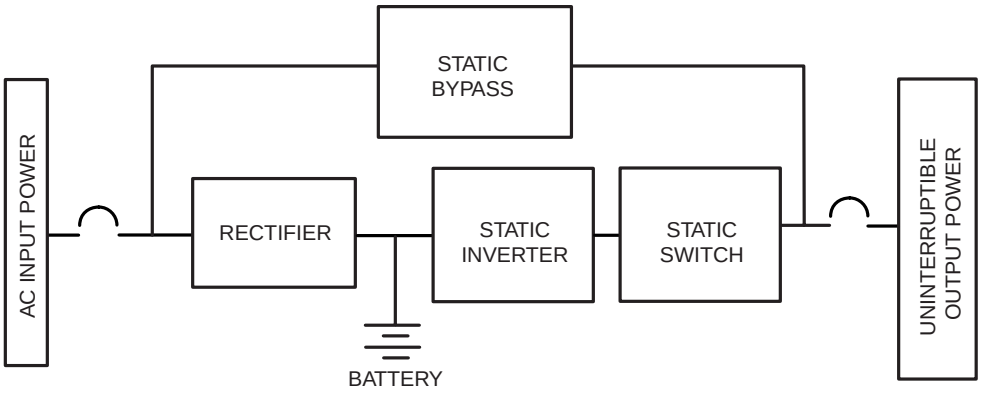


**Figure 6-4—Nonredundant uninterruptible power supply**


Copyright © 1998 IEEE. All rights reserved.

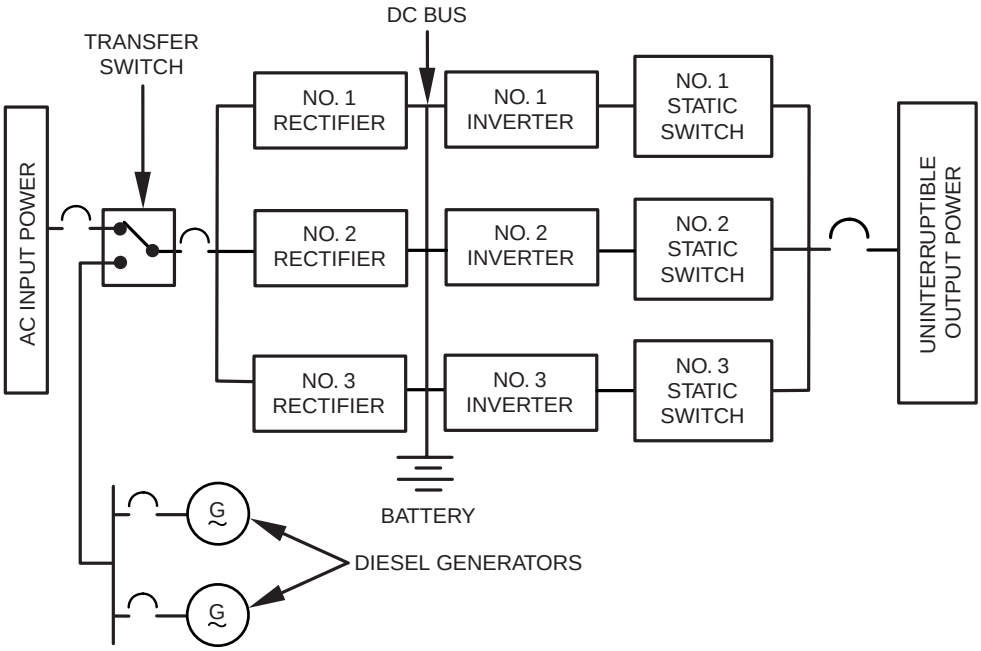


**Figure 6-5—Redundant uninterruptible power supply**

### 6.4.5 Mechanical uninterruptible power supplies

Figure 6-6 shows a typical rotating uninterruptible power supply. The basic set consists of a synchronous motor driving a synchronous generator. In case of a power failure, an inverter supplied from a battery provides the power for the motor until utility power is restored.

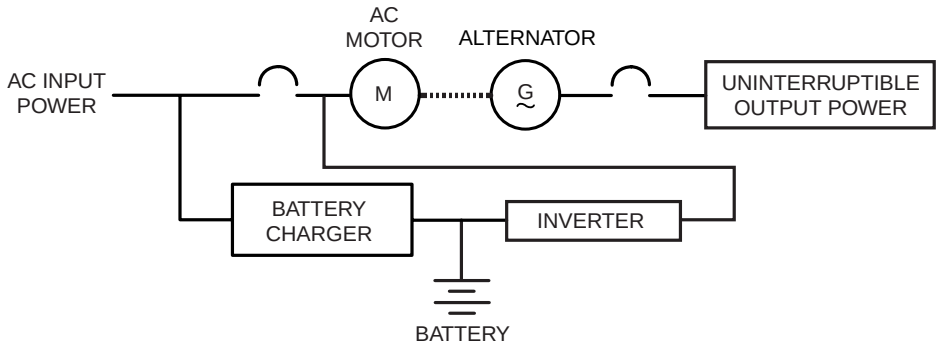


**Figure 6-6—Rotating uninterruptible power supply**

Copyright © 1998 IEEE. All rights reserved.

## 6.5 Selection and application data

The figures and system descriptions presented here are only a few of the many types of systems and hybrid systems available. For comprehensive selection and application data, see IEEE Std 446-1995 [B1].

## 6.6 Bibliography

[B1] IEEE Std 446-1995, IEEE Recommended Practice for Emergency and Standby Power Systems for Industrial and Commercial Applications (ANSI).[1]

[1]IEEE publications are available from the Institute of Electrical and Electronics Engineers, 445 Hoes Lane, P.O. Box 1331, Piscataway, NJ 08855-1331, USA.

 Copyright © 1998 IEEE. All rights reserved.

# Chapter 7
# Examples of reliability analysis and cost evaluation

## 7.1 Examples of reliability and availability analysis of common low-voltage industrial power distribution systems

### 7.1.1 Quantitative reliability and availability predictions

In this chapter, a description is given of how to make quantitative reliability and availability predictions for proposed new configurations of industrial power distribution systems. Seven examples are worked out, including a simple radial system, a primary-selective system, and a secondary-selective system. A brief tabulation is also given of pertinent reliability data needed in order to make the reliability and availability predictions. The simple radial system analyzed had an average number of forced hours of downtime per year that was 19 times larger than a secondary-selective system; the failure rate was six times larger. The importance of two separate power supply sources from the electric utility has been identified and analyzed. This approach could be used to assist in cost/reliability trade-off decisions in the design of the power distribution system.

### 7.1.2 Introduction

An industrial power distribution system may receive power at 13.8 kV from an electric utility and then distribute the power throughout the plant for use at the various locations. One of the questions often raised during the design of the power distribution system is whether there is a way of making a quantitative comparison of the failure rate and the forced hours downtime per year of a secondary-selective system with a primary-selective system and a simple radial system. This comparison could be used in cost/reliability and cost/availability trade-off decisions in the design of the power distribution system. The estimated cost of power outages at the various plant locations could be factored into the decision as to which type of power distribution system to use. The decisions could be based upon “total owning cost over the useful life of the equipment” rather than “first cost.”

Seven examples of common low-voltage industrial power distribution systems are analyzed in this chapter:

— Example 1—Simple radial system
— Example 2—Primary-selective system to 13.8 kV utility supply
— Example 3—Primary-selective system to load side of 13.8 kV circuit breaker
— Example 4—Primary-selective system to primary of transformer
— Example 5—Secondary selective system
— Example 6—Simple radial system with spares
— Example 7—Simple radial system with cogeneration

Only forced outages of the electrical equipment are considered in the seven examples. It is assumed that scheduled maintenance will be performed at times when 480 V power output is

Copyright © 1998 IEEE. All rights reserved.

not needed. The frequency of scheduled outages and the average duration can be estimated, and, if necessary, these can be added to the forced outages given in the seven examples.

When making a reliability study, it is necessary to define what a failure of the 480 V power is. Some of the failure definitions for 480 V power that are often used are as follows:

a) Complete loss of incoming power for more than 1 cycle
b) Complete loss of incoming power for more than 10 cycles
c) Complete loss of incoming power for more than 5 s
d) Complete loss of incoming power for more than 2 min

Definition c) will be used in the seven examples given. This definition of failure can have an effect in determining the necessary speed of automatic throwover equipment that is used in primary-selective or secondary-selective systems. In some cases, when making reliability studies, it might be necessary to further define what is a "complete loss of incoming power"; for example, "voltage drops below 70%."

One of the main benefits of a reliability and availability analysis is that a disciplined look is taken at the alternative choices in the design of the power distribution system. By using published reliability data collected by a technical society from industrial plants, the best possible attempt is made to use historical experience to aid in the design of the new system.

### 7.1.3 Definition of terminology

The definition of terms is given in Chapter 1 and 2.1.3. The units that are being used for "failure rate" and "average downtime per failure" are

$\lambda$ is the failure rate (failures per year); and
$r$ is the average downtime per failure (hours per failure equals average time to repair or replace a piece of equipment after a failure). In some cases, this is the time to switch to an alternate circuit when one is available.

### 7.1.4 Procedure for reliability and availability analysis

The "minimal cut-set" method for system reliability evaluation is described in 2.1.6, 2.1.8, and 2.1.9. The quantitative reliability indexes that are used in the seven examples are the failure rate and the forced hours downtime per year. These are calculated at the 480 V point of use in each example. The failure rate $\lambda$ is a measure of unreliability. The product $\lambda r$, (failure rate $\times$ average downtime per failure) is equal to the forced hours downtime per year and can be considered a measure of forced unavailability, since a scale factor of 8760 converts one quantity into the other. The average downtime per failure $r$ could be called "restorability."

The necessary formulas for calculating the reliability indexes of the minimal cut-set approach are given in Equations (2-1) and (2-2) in 2.1.9 and Equations (2-5) and (2-6) in 2.1.11.1. A sample using these formulas is shown in Figure 7-1 for two components in series and two components in parallel. In these samples the scheduled outages are assumed to be 0 and the

 Copyright © 1998 IEEE. All rights reserved.

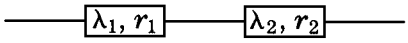


$$f_s = \lambda_1 + \lambda_2$$

$$f_s r_s = \lambda_1 r_1 + \lambda_2 r_2$$

$$r_s = \frac{\lambda_1 r_1 + \lambda_2 r_2}{\lambda_1 + \lambda_2}$$

**(a) Reparable components in series (both must work for success)**

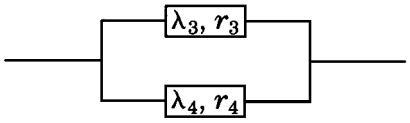


$$f_p = \frac{\lambda_3 \lambda_4 (r_3 + r_4)}{8760}$$

$$f_p r_p = \frac{\lambda_3 r_3 (\lambda_4 r_4)}{8760}$$

$$r_p = \frac{r_3 r_4}{r_3 + r_4}$$

**(b) Reparable components in parallel (one or both must work for success)**

Nomenclature:

- $f$ = Frequency of failures
- $\lambda$ = Failures per year
- $r$ = Average hours of downtime per failure
- $s$ = Series
- $p$ = Parallel

NOTE—There formulas are approximate and should only be used when both $\frac{\lambda_3 r_3}{8760}$ and $\frac{\lambda_4 r_4}{8760}$ are less than 0.01.

**Figure 7-1—Formulas for reliability calculations**

Copyright © 1998 IEEE. All rights reserved.

units for $\lambda$ and $r$ are, respectively, failures per year and hours downtime per failure. The formulas in Figure 7-1 assume the following:

a) The component failure rate is constant with age.
b) The outage time after a failure has an exponential distribution. (Probability of outage time exceeding $\tau$ is $\varepsilon^{-\tau/r}$).
c) Each failure event is independent of any other failure event.
d) The component "up" times are much larger than "down" times:

$$\frac{\lambda_i r_i}{8760} < 0.01$$

The reliability data to be used for the electrical equipment and the electric utility supply are given in 7.1.5.

### 7.1.5 Reliability data from 1973–75 IEEE surveys

In order to make a reliability and availability analysis of a power distribution system, it is necessary to have data on the reliability of each component of electrical equipment used in the system. Ideally, these reliability data should come from field use of the same type of equipment under similar environmental conditions and similar stress levels. In addition, there should be a sufficient number of field failures in order to represent an adequate sample size. It is believed that eight field failures are the minimum number necessary in order to have a reasonable chance of determining a failure rate to within a factor of 2. The types of reliability data needed on each component of electrical equipment are

— Failure rate (failures per year)
— Average downtime to repair or replace a piece of equipment after a failure (hours per failure)

These reliability data on each component of electrical equipment can then be used to represent historical experience for use in cost/reliability and cost/availability trade-off studies in the design of new power distribution systems.

From 1973–1975, the Power Systems Reliability Subcommittee of the Industrial and Commercial Power Systems Committee conducted and published surveys of electrical equipment reliability in industrial plants (see IEEE Committee Reports [B7], [B8]). See Appendixes A, B, and D for the data. See Chapter 3 for a summary of these data and data from later surveys. These reliability surveys of electrical equipment and electric utility power supplies were extensive. The pertinent failure rate and average downtime per failure information for the electrical equipment are given in Table 7-1. In compiling these data, a failure was defined as any trouble with a power system component that causes any of the following effects:

— Partial or complete plant shutdown, or below-standard plant operation
— Unacceptable performance of user's equipment
— Operation of the electrical protective relaying or emergency operation of the plant electric system
— De-energization of any electric circuit or equipment

 Copyright © 1998 IEEE. All rights reserved.

**Table 7-1—Reliability data from 1973–74 IEEE reliability survey of industrial plants (see IEEE Committee Report [B8])[1]**

| Equipment category | λ, failures per year | *r*, hours of down-time per failure | λ*r*, forced hours of down-time per year | Data source in IEEE survey [B8] Table |
|---|---|---|---|---|
| Protective relays | 0.0002 | 5.0 | 0.0010 | 19 |
| Metalclad drawout circuit breakers | | | | |
| 0–600 V | 0.0027 | 4.0 | 0.0108 | 5, 50 |
| Above 600 V | 0.0036 | 83.1[a] | 0.2992 | 5, 51 |
| Above 600 V | 0.0036 | 2.1[b] | 0.0076 | 5, 51 |
| Power cables (1000 circuit ft) | | | | |
| 0–600 V, above ground | 0.00141 | 10.5 | 0.0148 | 13 |
| 601–15 000 V, conduit below ground | 0.00613 | 26.5[a] | 0.1624 | 13, 56 |
| 601–15 000 V, conduit below ground | 0.00613 | 19.0[b] | 0.1165 | 13, 56 |
| Cable terminations | | | | |
| 0–600 V, above ground | 0.0001 | 3.8 | 0.0004 | 17 |
| 601–15 000 V, conduit below ground | 0.0003 | 25.0 | 0.0075 | 17 |
| Disconnect switches enclosed | 0.0061 | 3.6 | 0.0220 | 9 |
| Transformers | | | | |
| 601–15 000 V | 0.0030 | 342.0[a] | 1.0260 | 4, 48 |
| 601–15 000 V | 0.0030 | 130.0[b] | 0.3900 | 4, 48 |
| Switchgear bus—bare | | | | |
| 0–600 V (connected to 7 breakers) | 0.0024 | 24.0 | 0.0576 | 10 |
| 0–600 V (connected to 5 breakers) | 0.0017 | 24.0 | 0.0408 | 10 |
| Switchgear bus—insulated | | | | |
| 601–15 000 V (connected to 1 breaker) | 0.0034 | 26.8 | 0.0911 | 10 |
| 601–15 000 V (connected to 2 breakers) | 0.0068 | 26.8 | 0.1822 | 10 |
| 601–15 000 V (connected to 3 breakers) | 0.0102 | 26.8 | 0.2733 | 10 |
| Gas turbine generator | 4.5000 | 7.2 | 32.4000 | Appendix L, Table III |

[a]Repair failed unit.
[b]Replace with spare.

[1]The numbers in brackets preceded by the letter B correspond to those of the bibliography in 7.3.

Copyright © 1998 IEEE. All rights reserved.

A failure on a public utility supply system may cause the user to have either of the following:

— A power interruption or loss of service
— A deviation from normal voltage or frequency outside the normal utility profile

A failure of an in-plant component causes a forced outage of a component; that is, the component is unable to perform its intended function until it is repaired or replaced. The terms "failure" and "forced outage" are often used synonymously.

In addition to the reliability data for electrical equipment shown in Table 7-1, there are some "failure modes" of circuit breakers that require backup protective equipment to operate, for example, "failed to trip" or "failed to interrupt." Both of these failure modes would require that a circuit breaker farther up the line be opened, and this would result in a larger part of the power distribution system being disconnected. Reliability data on the "failure modes of circuit breakers" are shown in Table 7-2. These data are used for the 480 V circuit breakers in all seven examples discussed in this chapter. It will be assumed that the "flashed over while open" failure mode for circuit breakers and disconnect switches has a failure rate of 0.

**Table 7-2—Failure modes of circuit breakers**

Percentage of total failures in each failure mode (See Table 3-27)

| Percentage of total failures (all voltages) | Failure characteristic |
|---|---|
| | Backup protective equipment required |
| 9 | Failed while opening |
| | Other circuit breaker failures |
| 7 | Damaged while successfully opening |
| 32 | Failed while in service (not while opening or closing) |
| 5 | Failed to close when it should |
| 2 | Damaged while closing |
| 42 | Opened when it shouldn't |
| 1 | Failed during testing or maintenance |
| 1 | Damage discovered during testing or maintenance |
| 1 | Other |
| 100 | Total percentage |

The failure rate and average downtime per failure data for the electric utility power supplies are given in Table 7-3. This includes both single-circuit and double-circuit reliability data. The two power sources in a double-circuit utility supply are not completely independent, and the reliability and availability analysis must take this into consideration. This subject is discussed further in 7.1.16.

 Copyright © 1998 IEEE. All rights reserved.

**Table 7-3—IEEE survey of reliability of electric utility power supplies to industrial plants**

(See Table 3-31)

| Number of circuits (all voltages) | λ, failures per year | *r*, hours of downtime per failure | λ *r*, forced hours of downtime per year |
|---|---|---|---|
| Single circuit | 1.956 | 1.32 | 2.582 |
| Double circuit | | | |
| Loss of both circuits[a] | 0.312 | 0.52 | 0.1622 |
| Calculated value for loss of Source 1 (while Source 2 is OK) | 1.644 | 0.15[b] | 0.2466 |

[a]Data for double circuits had all circuit breakers closed.

[b]Manual switchover time of 9 min to source 2.

### 7.1.6 Example 1—Reliability and availability analysis of a simple radial system

#### 7.1.6.1 Description of simple radial system

A simple radial system is shown in Figure 7-2. Power is received at 13.8 kV from the electric utility. Then it goes through a 13.8 kV circuit breaker inside the industrial plant, 600 ft of cable in underground conduit, an enclosed disconnect switch, to a transformer that reduces the voltage to 480 V then through a 480 V main circuit breaker, a second 480 V circuit breaker, 300 ft of cable in above ground conduit, to the point where the power is used in the industrial plant.

#### 7.1.6.2 Results—Simple radial system

The results from the reliability and availability calculations are given in Table 7-4. The failure rate and the forced hours downtime per year are calculated at the 480 V point of use.

The relative ranking of how each component contributes to the failure rate is of considerable interest. This is tabulated in Table 7-5.

The relative ranking of how each component contributes to the forced hours downtime per year is also of considerable interest. This is given in Table 7-6.

It might be expected that the power distribution system would be shut down once every two years for scheduled maintenance for a period of 24 hours. These shutdowns would be in addition to the outage data given in Tables 7-4 and 7-5.

Copyright © 1998 IEEE. All rights reserved.

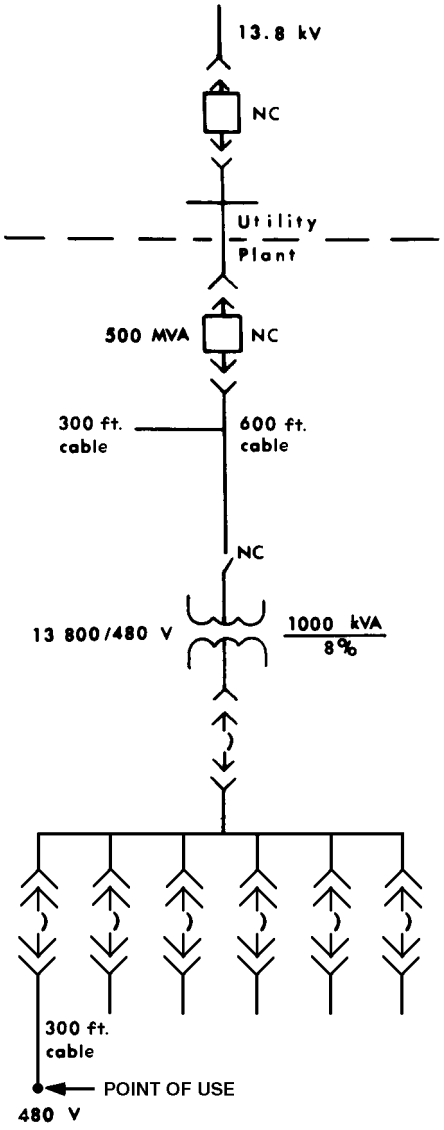


**Figure 7-2—Simple radial system—Example 1**

### 7.1.6.3 Conclusions—Simple radial system

The electric utility supply is the largest contributor to both the failure rate and the forced hours downtime per year at the 480 V point of use. A significant improvement can be made in both the failure rate and the forced hours downtime per year by having two sources of power

 Copyright © 1998 IEEE. All rights reserved.

**Table 7-4—Simple radial system—Reliability and availability of power at 480 V— (Example 1)**

| Component | λ, failures per year | λ *r*, forced hours of downtime per year |
|---|---|---|
| 13.8 kV power source from electric utility | 1.956 | 2.582 |
| Protective relays (3) | 0.0006 | 0.0030 |
| 13.8 kV metalclad circuit breaker | 0.0036 | 0.2992[a] |
| Switchgear bus—insulated (connected to 1 breaker) | 0.0034 | 0.0911 |
| Cable (13.8 kV); 900 ft, conduit below ground | 0.0055 | 0.1458[a] |
| Cable terminations (6) at 13.8 kV | 0.0018 | 0.0450 |
| Disconnect switch (enclosed) | 0.0061 | 0.0220 |
| Transformer | 0.0030 | 1.0260[a] |
| 480 V metalclad circuit breaker | 0.0027 | 0.0108 |
| Switchgear bus—bare (connected to 7 breakers) | 0.0024 | 0.0576 |
| 480 V metalclad circuit breaker | 0.0027 | 0.0108 |
| 480 V metalclad circuit breakers (5) (failed while opening) | 0.0012 | 0.0048 |
| Cable (480 V); 300 ft conduit above ground | 0.0004 | 0.0044 |
| Cable terminations (2) at 480 V | 0.0002 | 0.0008 |
| Total at 480 V output | 1.9896 | 4.3033 |

[a]Data for hours of downtime per failure are based upon *repair failed unit.*

**Table 7-5—Simple radial system—Relative ranking of failure rates**

| | λ, failures per year |
|---|---|
| 1. Electric utility | 1.956 |
| 2. 13.8 kV cable and terminations | 0.0073 |
| 3. Disconnect switch | 0.0061 |
| 4. 13.8 kV circuit breaker | 0.0036 |
| 5. Switchgear bus—insulated | 0.0034 |
| 6. Transformer | 0.0030 |
| 7. 480 V circuit breaker | 0.0027 |
| 8. 480 V circuit breaker (main) | 0.0027 |
| 9. Switchgear bus—bare | 0.0024 |
| 10. 480 V circuit breakers (5) (failed while opening) | 0.0012 |
| 11. 480 V cable and terminations | 0.0006 |
| 12. Protective relays (3) | 0.0006 |
| Total | 1.9896 |

at 13.8 kV from the electric utility. The improvements that can be obtained are shown in Examples 2, 3, and 4 using “primary-selective system” and in Example 5 using “secondary-selective system.”

The transformer is the second largest contributor to forced hours downtime per year. The transformer has a very low failure rate, but the long outage time of 342 h after a failure results

Copyright © 1998 IEEE. All rights reserved.

**Table 7-6—Simple radial system—
Relative ranking of forced hours of downtime per year**

| | $\lambda r$, forced hours of downtime per year |
|---|---|
| 1. Electric utility | 2.582 |
| 2. Transformer | 1.0260[a] |
| 3. 13.8 kV circuit breaker | 0.2992[a] |
| 4. 13.8 kV cable and terminations | 0.1908[a] |
| 5. Switchgear bus—insulated | 0.0911 |
| 6. Switchgear bus—bare | 0.0576 |
| 7. Disconnect switch | 0.0220 |
| 8. 480 V circuit breaker | 0.0108 |
| 9. 480 V circuit breaker (main) | 0.0108 |
| 10. 480 V cable and terminations | 0.0052 |
| 11. 480 V circuit breakers (5) (failed while opening) | 0.0048 |
| 12. Protective relays (3) | 0.0030 |
| Total | 4.3033 |

[a]Data for hours of downtime per failure are based upon *repair failed unit.*

in a large $\lambda r$, forced hours downtime per year. The 13.8 kV circuit breaker is the third largest contributor to forced hours downtime per year, and the fourth largest contributor is the 13.8 kV cables and terminations. This is a result of the average outage time after a failure of 83.1 hours for the 13.8 kV circuit breaker and 26.5 h for the 13.8 kV cable.

The long outage times after a failure for the transformer, 13.8 kV circuit breaker, and the 13.8 kV cable are all based upon "repair failed unit." These outage times after a failure can be reduced significantly if the "replace with spare" times shown in Table 7-1 are used instead of "repair failed unit." This is done in Example 6, using a simple radial system with spares.

### 7.1.7 Example 2—Reliability and availability analysis of primary-selective system to 13.8 kV utility supply

#### 7.1.7.1 Description—Primary-selective system to 13.8 kV utility supply

The primary-selective system to 13.8 kV utility supply is shown in Figure 7-3. It is a simple radial system with the addition of a second 13.8 kV power source from the electric utility; the second power source is normally disconnected. In the event that there is a failure in the first 13.8 kV utility power source, then the second 13.8 kV utility power source is switched on to replace the failed power source. Assume that the two utility power sources are synchronized.

*Example 2a*—Assume a 9 min "manual switchover time" to utility power source no. 2 after a failure of source no. 1.

*Example 2b*—Assume an "automatic switchover time" of less than 5 s after a failure is assumed (loss of 480 V power for less than 5 s is not counted as a failure).

 Copyright © 1998 IEEE. All rights reserved.

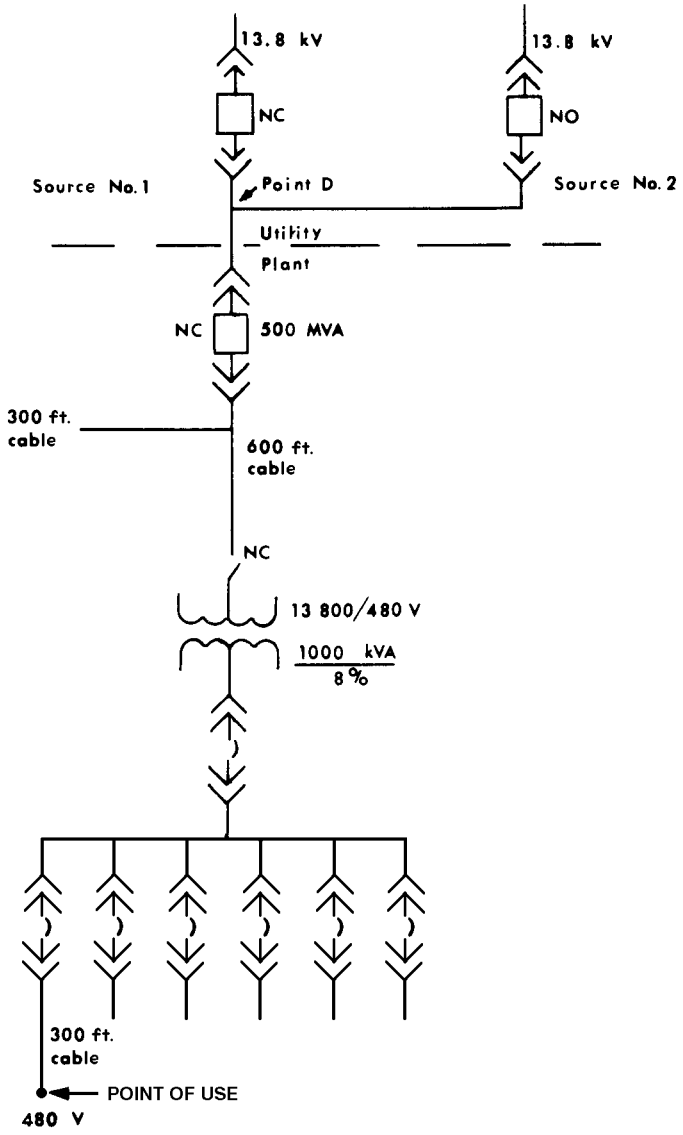


**Figure 7-3—Primary-selective system to 13.8 kV utility supply—Example 2**

### 7.1.7.2 Results—Primary-selective system to 13.8 kV utility supply

*Example 2a*—If the time to switch to a second utility power source takes 9 min after a failure of the first source, then there would be a power supply failure of 9 min duration. Using the data from Table 7-3, for double-circuit utility supplies, this would occur 1.644 times per year

Copyright © 1998 IEEE. All rights reserved.

(1.956–0.312). This is in addition to losing both power sources simultaneously 0.312 times per year for an average outage time of 0.52 h. If these utility supply data are added together and substituted into Table 7-4 on the simple radial system, it would result in reducing the forced hours downtime per year at the 480 V point of use from 4.3033 to 2.1291. The failure rate would stay the same at 1.9896 failures per year. These results are given in Table 7-7.

**Table 7-7—Simple radial system and primary selective system to 13.8 kV utility supply—Reliability and availability comparison of power at 480 V point of use (Example 2)**

| Component | $\lambda$, failures per year | $\lambda r$, forced hours of downtime per year |
|---|---|---|
| *Example 1*<br>Simple radial system | 1.9896 | 4.3033 |
| *Example 2a*<br>Primary-selective system to 13.8 kV utility supply (with 9 min switchover after a supply failure) | 1.9896 | 2.1291 |
| *Example 2b*<br>Primary-selective system to 13.8 kV utility supply (with switchover in less than 5 s after a supply failure)[a] | 0.3456 | 1.8835 |

[a]Loss of 480 V power for less than 5 s is not counted as a failure.

*Example 2b*—If the time to switch to a second utility power source takes less than 5 s after a failure of the first source, then there would be no failure of the electric utility power supply. The only time a failure of the utility power source would occur is when both sources fail simultaneously. It will be assumed that the data shown in Table 7-3 are applicable for loss of both power supply circuits simultaneously. This is 0.312 failures per year with an average outage time of 0.52 h. If these values of utility supply data are substituted into Table 7-4, it would result in reducing the forced hours downtime per year from 4.3033 to 1.8835 h per year at the 480 V point of use; the failure rate would be reduced from 1.9896 to 0.3456 failures per year. These results are also given in Table 7-7.

### 7.1.7.3 Conclusion—Primary-selective system to the 13.8 kV utility supply

The use of the primary-selective system to the 13.8 kV utility supply with 9 min manual switchover time reduces the forced hours downtime per year at the 480 V point of use by about 50%; but the failure rate is the same as for a simple radial system.

The use of automatic throwover equipment that could sense a failure of one 13.8 kV utility supply and switchover to the second supply in less than 5 s would give a 6 to 1 improvement in the failure rate at the 480 V point of use (a loss of 480 V power for less than 5 s is not counted as a failure).

 Copyright © 1998 IEEE. All rights reserved.

### 7.1.8 Example 3—Primary-selective system to load side of 13.8 kV circuit breaker

#### 7.1.8.1 Description of primary-selective system to load side of 13.8 kV circuit breaker

Figure 7-4 shows a one-line diagram of the power distribution system for primary-selective to load side of 13.8 kV circuit breaker. What are the failure rate and the forced hours downtime per year at the 480 V point of use?

*Example 3a*—Assume 9 min manual switchover time.

*Example 3b*—Assume automatic switchover can be accomplished in less than 5 s after a failure (loss of 480 V power for less than 5 s is not counted as a failure).

#### 7.1.8.2 Results—Primary-selective system to load side of 13.8 kV circuit breaker

The results from the reliability and availability calculations are given in Table 7-8.

#### 7.1.8.3 Conclusions—Primary-selective system to load side of 13.8 kV circuit breaker

The forced hours downtime per year at the 480 V point of use in Example 3 (primary-selective system to the load side of 13.8 kV circuit breaker) is about 10% lower than in Example 2 (primary-selective system to 13.8 kV utility supply). The failure rate is about the same.

### 7.1.9 Example 4—Primary-selective system to primary of transformer

#### 7.1.9.1 Description of Primary-selective system to primary of transformer

Figure 7-5 shows a one-line diagram of the power distribution system for the primary-selective system to primary of transformer. What are the failure rate and the forced hours downtime per year at the 480 V point of use? Assume 1 h switchover time.

#### 7.1.9.2 Results—Primary-selective system to primary of transformer

The results from the reliability and availability calculations are given in Table 7-9.

#### 7.1.9.3 Conclusions—Primary-selective system to primary of transformer

The forced hours downtime per year at the 480 V point of use in Example 4 (primary-selective system to primary of transformer) is about 32% lower than for the simple radial system shown in Example 1. The failure rate is the same in Examples 1 and 4.

Copyright © 1998 IEEE. All rights reserved.

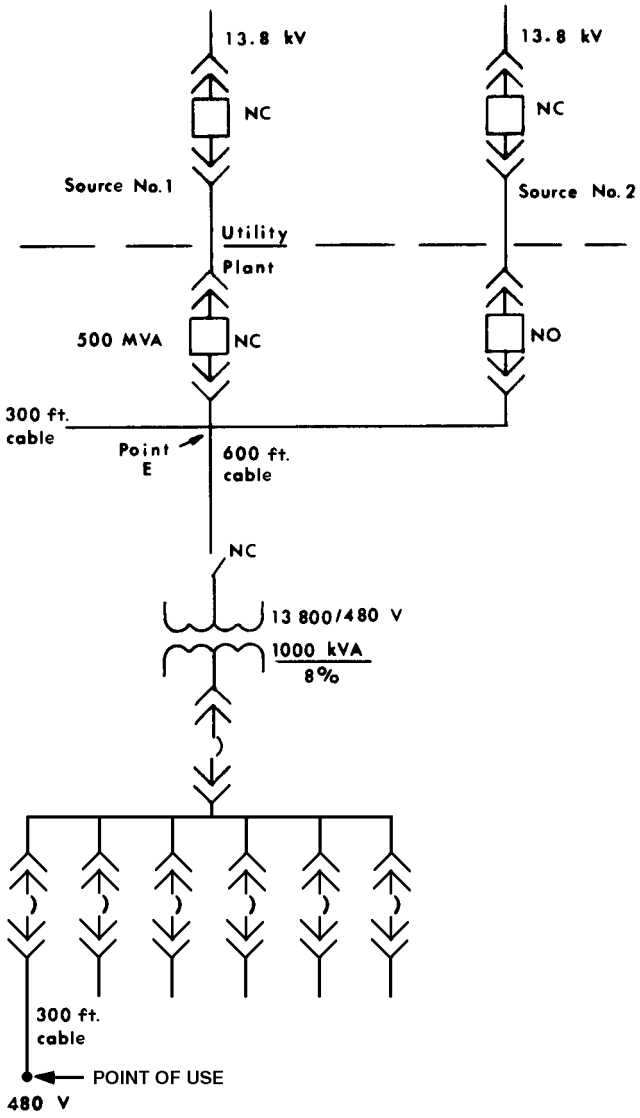


**Figure 7-4—Primary selective system to the load side of 13.8 kV circuit breaker—Example 3**


Copyright © 1998 IEEE. All rights reserved.

**Table 7-8—Primary-selective system to load side of 13.8 kV circuit breaker—Reliability and availability comparison of power at 480 V point of use (Example 3)**

| Component | Example 3a (9 min switchover time) | | Example 3b (switchover in less than 5 s)[a] | |
|---|---|---|---|---|
| | λ, failures per year | λ *r*, forced hours of downtime per year | λ, failures per year | λ *r*, forced hours of downtime per year |
| 13.8 kV power source<br>(loss of only source 1)<br>Protective relays (3)<br>13.8 kV metalclad circuit breaker | 1.644<br><br>0.0006<br>0.0036 | | | |
| Total through 13.8 kV circuit breaker with 9 min switchover after a failure of source 1 (and source 2 is OK) | 1.6482 | 0.2472 | | |
| Loss of both 13.8 kV power sources simultaneously | 0.312 | 0.1622 | 0.312 | 0.1622 |
| Switchgear bus—insulated<br>(connected to 2 breakers) | 0.0068 | 0.1822 | 0.0068 | 0.1822 |
| Total to point E | 1.9670 | 0.5916 | 0.3188 | 0.3444 |
| Cable (13.8 kV);<br>900 ft, conduit below ground<br>Cable terminations (6) at 13.8 kV<br>Disconnect switch (enclosed)<br>Transformer<br>480 V metalclad circuit breaker<br>Switchgear bus—bare<br>(connected to 7 breakers)<br>480 V metalclad circuit breaker<br>480 V metalclad circuit breakers (5)<br>(failed while opening)<br>Cable (480 V);<br>300 ft, conduit above ground<br>Cable terminations (2) at 480 V | 0.0055<br><br>0.0018<br>0.0061<br>0.0030<br>0.0027<br>0.0024<br><br>0.0027<br>0.0012<br><br>0.0004<br><br>0.0002 | 0.1458[b]<br><br>0.0450<br>0.0220<br>1.0260[b]<br>0.0108<br>0.0576<br><br>0.0108<br>0.0048<br><br>0.0044<br><br>0.0008 | 0.0055<br><br>0.0018<br>0.0061<br>0.0030<br>0.0027<br>0.0024<br><br>0.0027<br>0.0012<br><br>0.0004<br><br>0.0002 | 0.1458[b]<br><br>0.0450<br>0.0220<br>1.0260[b]<br>0.0108<br>0.0576<br><br>0.0108<br>0.0048<br><br>0.0044<br><br>0.0008 |
| Total at 480 V output | 1.9930 | 1.9196 | 0.3448 | 1.6724 |

[a]Loss of 480 V power for less than 5 s is not counted as a failure.
[b]Data for hours of downtime per failure are based upon *repair failed unit.*

Copyright © 1998 IEEE. All rights reserved.

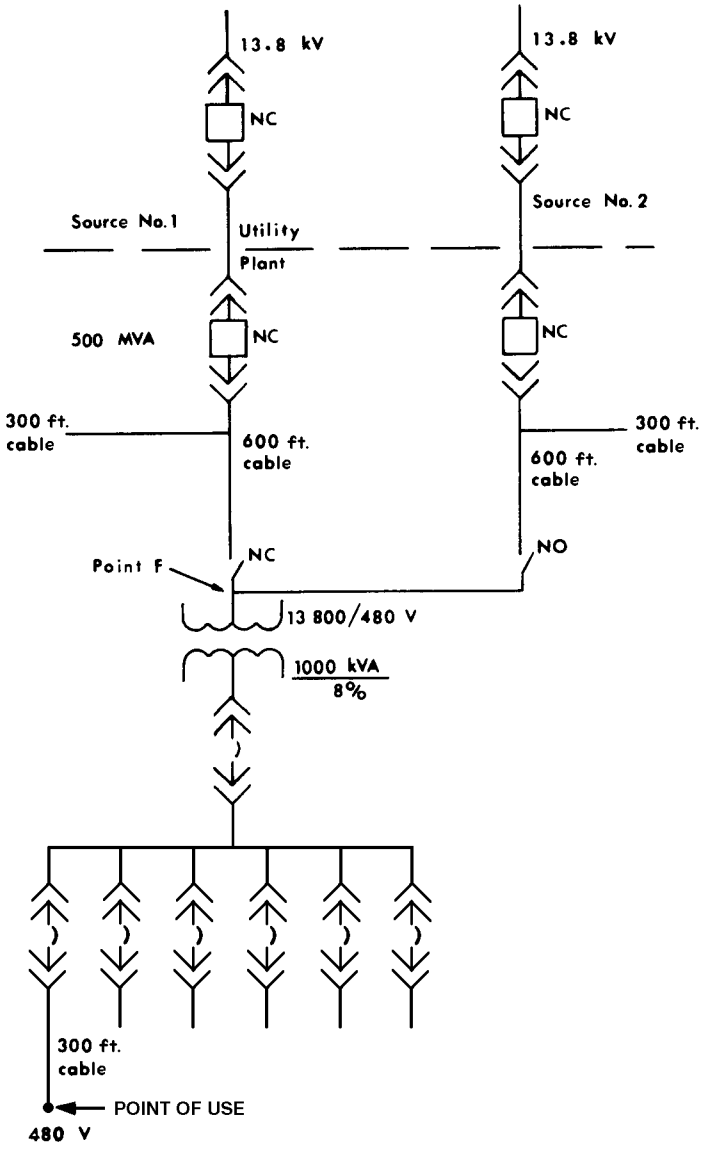


**Figure 7-5—Primary selective system to primary of transformer—Example 4**


Copyright © 1998 IEEE. All rights reserved.

**Table 7-9—Primary-selective system to primary of transformer—Reliability and availability comparison of power at 480 V point of use (Example 4)**

| Component | Example 4 (switchover time 1 h) | |
|---|---|---|
| | λ, failures per year | λ *r*, forced hours of downtime per year |
| 13.8kV power source from electric utility (loss of source 1) | 1.644 | |
| Protective relays (3) | 0.0006 | |
| 13.8 kV metalclad circuit breaker | 0.0036 | |
| Switchgear bus—insulated (connected to 1 breaker) | 0.0034 | |
| Cable (13.8 kV); 900 ft, conduit below ground | 0.0055 | |
| Cable terminations (6) at 13.8 kV | 0.0018 | |
| Disconnect switch (enclosed) | 0.0061 | |
| Total through disconnect switch with 1 h switchover after a failure of source 1 (and source 2 is OK) | 1.6650 | 1.6650 |
| Loss of both 13.8 kV power sources simultaneously | 0.312 | 0.1622 |
| Total to point F | 1.9770 | 1.8272 |
| Transformer | 0.0030 | 1.0260[a] |
| 480 V metalclad circuit breaker | 0.0027 | 0.0108 |
| Switchgear bus—bare (connected to 7 breakers) | 0.0024 | 0.0576 |
| 480 V metalclad circuit breaker | 0.0027 | 0.0108 |
| 480 V metalclad circuit breakers (5) (failed while opening) | 0.0012 | 0.0048 |
| Cable (480 V); 300 ft conduit above ground | 0.0004 | 0.0044 |
| Cable terminations (2) at 480 V | 0.0002 | 0.0008 |
| Total at 480 V output | 1.9896 | 2.9424 |

[a]Data for hours of downtime per failure are based upon *repair failed unit*.

### 7.1.10 Example 5—Secondary selective system

#### 7.1.10.1 Description of secondary-selective system

Figure 7-6 shows a one-line diagram of the power distribution system for a secondary-selective system. What are the failure rate and forced hours of downtime per year at the 480 V point of use?

*Example 5a*—Assume a 9 min manual switchover time.

*Example 5b*—Assume automatic switchover can be accomplished in less than 5 s after a failure (loss of 480 V power for less than 5 s is not counted as a failure).

Copyright © 1998 IEEE. All rights reserved.

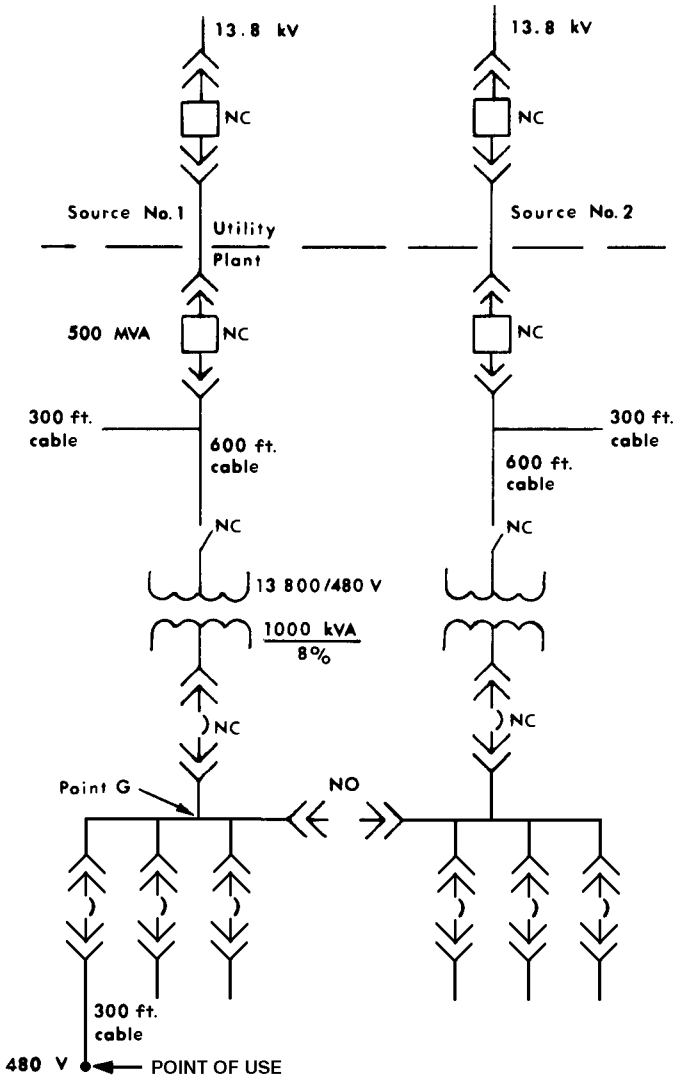


**Figure 7-6—Secondary-selective system—Example 5**

### 7.1.10.2 Results—Secondary-selective system

The results from the reliability and availability calculations are given in Table 7-10.

 Copyright © 1998 IEEE. All rights reserved.

**Table 7-10—Secondary-selective system—Reliability and availability comparison of power at 480 V point of use (Example 5)**

| Component | Example 3a (9 min switchover time) | | Example 5b (switchover in less than 5 s[a]) | |
|---|---|---|---|---|
| | λ, failures per year | λ *r*, forced hours of downtime per year | λ, failures per year | λ *r*, forced hours of downtime per year |
| 13.8 kV power source (loss of only source 1) | 1.644 | | | |
| Protective relays (3) | 0.0006 | | | |
| 13.8 kV metalclad circuit breaker | 0.0036 | | | |
| Switchgear bus—insulated (connected to 1 breaker) | 0.0034 | | | |
| Cable (13.8 kV); 900 ft, conduit below ground | 0.0055 | | | |
| Cable terminations (6) at 13.8 kV | 0.0018 | | | |
| Disconnect Switch (enclosed) | 0.0061 | | | |
| Transformer | 0.0030 | | | |
| 480 V metalclad circuit breaker | 0.0027 | | | |
| Total through 13.8 kV circuit breaker with 9 min switchover after a failure of source 1 (and source 2 is OK) | 1.6707 | 0.2506 | | |
| Total through 480 V main circuit breaker with switchover in less than 5 s after a failure of source 1 (and source 2 OK) | | | 0.0 | 0.0 |
| Loss of both 13.8 kV power sources simultaneously | 0.312 | 0.1622 | 0.312 | 0.1622 |
| Total to point G | 1.9827 | 0.4128 | 0.312 | 0.1622 |
| Switchgear bus—insulated (connected to 5 breakers) | 0.0017 | 0.0408 | 0.0017 | 0.0408 |
| 480 V metalclad circuit breaker | 0.0027 | 0.0108 | 0.0027 | 0.0108 |
| 480 V metalclad circuit breakers (2) (failed while opening) | 0.0005 | 0.0020 | 0.0005 | 0.0020 |
| Cable (480 V); 300 ft, conduit above ground | 0.0004 | 0.0044 | 0.0004 | 0.0044 |
| Cable terminations (2) at 480 V | 0.0002 | 0.0008 | 0.0002 | 0.0008 |
| Total at 480 V output | 1.9882 | 0.4716 | 0.3175 | 0.2210 |

[a]Loss of 480 V power for less than 5 s is not counted as a failure.

Copyright © 1998 IEEE. All rights reserved.

#### 7.1.10.3 Conclusions—Secondary-selective system

The simple radial system in Example 1 had an average forced hours downtime per year that was 19 times larger than the secondary-selective system in Example 5b with automatic throwover in less than 5 s. The failure rate of the simple radial system was six times larger than the secondary-selective system in Example 5b with automatic switchover in less than 5 s.

### 7.1.11 Example 6—Simple radial system with spares

#### 7.1.11.1 Description of simple radial system with spares

Figure 7-2 shows a one-line diagram of the power distribution system for a simple radial system. What are the failure rate and forced hours of downtime per year of the 480 V point of use if all of the following spare parts are available and can be installed as a replacement in these average times?

a) 13.8 kV circuit breaker (inside plant only)—2.1 h
b) 900 ft of cable (13.8 kV)—19 h
c) 1000 kVA transformer—130 h

The above three “replace with spare” times were obtained from Table 7-1 and are the actual values obtained from the IEEE Committee Report on the Reliability Survey of Industrial Plants [B8]. The times are much lower than the “repair failed unit” times that were used in Examples 1 through 5.

#### 7.1.11.2 Results—Simple radial system with spares

The results of the reliability and availability calculations are given in Table 7-11. They are compared with those of the simple radial system in Example 1 using average outage times based upon “repair failed unit.”

#### 7.1.11.3 Conclusions—Simple radial system with spares

The simple radial system with spares in Example 6 had a forced hours downtime per year that was 22% lower than the simple radial system in Example 1.

### 7.1.12 Example 7—Simple radial system with cogeneration

#### 7.1.12.1 Description of simple radial system with cogeneration

Figure 7-7 shows a single-line diagram of the power distribution system for a simple radial system with cogeneration. What are the failure rate and forced hours of downtime per year at the 480 V point of use, assuming the utility and cogeneration sources are operated in parallel?

 Copyright © 1998 IEEE. All rights reserved.

**Table 7-11—Simple radial system with spares—Reliability and availability comparison of power at 480 V point of use (Example 6)**

| Component | Example 1 Simple radial | | | Example 6 Simple radial with spares | | |
|---|---|---|---|---|---|---|
| | λ, failures per year | *r*, forced hours of down-time per failure | λ *r*, forced hours of down-time per year | λ, failures per year | *r*, forced hours of down-time per failure | λ *r*, forced hours of down-time per year |
| 13.8 kV power source from electric utility | 1.956 | | 2.582 | 1.956 | | 2.582 |
| Protective relays (3) | 0.0006 | | 0.0030 | 0.0006 | | 0.0030 |
| 13.8 kV metalclad circuit breaker | 0.0036 | 83.1[a] | 0.2292[a] | 0.0036 | 2.1[b] | 0.0076[b] |
| Switchgear bus—insulated (connected to 1 breaker) | 0.0034 | | 0.0911 | 0.0034 | | 0.0911 |
| Cable (13.8 kV); 900 ft, conduit below ground | 0.0055 | 26.5[a] | 0.1458[a] | 0.0055 | 19.0[b] | 0.1045[b] |
| Cable terminations (6) at 13.8 kV | 0.0018 | | 0.0450 | 0.0018 | | 0.0450 |
| Disconnect switch (enclosed) | 0.0061 | | 0.0020 | 0.0061 | | 0.0220 |
| Transformer | 0.0030 | 342.0[a] | 1.0260[a] | 0.0030 | 130.0[b] | 0.3900[b] |
| 480 V metalclad circuit breaker | 0.0027 | | 0.0108 | 0.0027 | | 0.0108 |
| Switchgear bus—bare (connected to 7 breakers) | 0.0024 | | 0.0576 | 0.0024 | | 0.0576 |
| 480 V metalclad circuit breaker | 0.0027 | | 0.0108 | 0.0027 | | 0.0108 |
| 480 V metalclad circuit breakers (5) (failed while opening) | 0.0012 | | 0.0048 | 0.0012 | | 0.0048 |
| Cable (480 V); 300 ft, conduit above ground | 0.0004 | | 0.0044 | 0.0004 | | 0.0044 |
| Cable terminations (2) at 480 V | 0.0002 | | 0.0008 | 0.0002 | | 0.0008 |
| Total at 480 V output | 1.9896 | | 4.3033 | 1.9896 | | 3.3344 |

[a]Data for hours of downtime per failure are based upon *repair failed unit.*
[b]Data for hours of downtime per failure are based upon *replace with spare.*

### 7.1.12.2 Results—Simple radial system with cogeneration

The results from the reliability and availability calculations are given in Table 7-12.

Copyright © 1998 IEEE. All rights reserved.

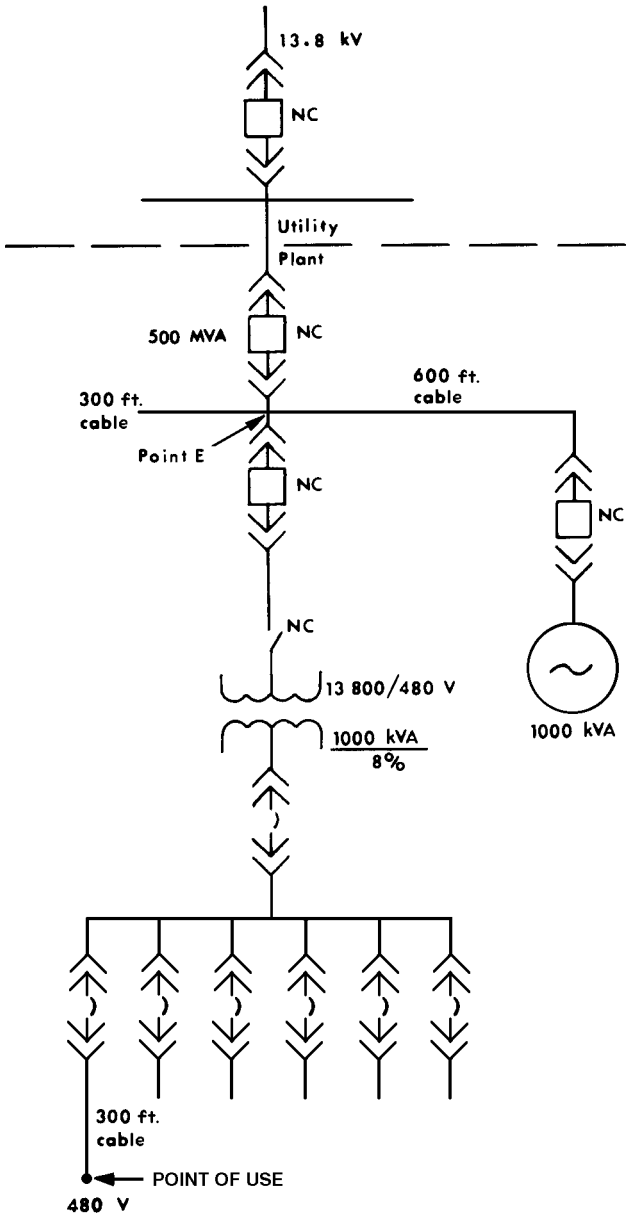


**Figure 7-7—Simple radial system with cogeneration reliability and availability of power at 480 V point of use—Example 7**


Copyright © 1998 IEEE. All rights reserved.

**Table 7-12—Simple radial system with cogeneration reliability and availability of power at 480 V point of use (Example 7)**

| Component | λ, failures per year | λ *r*, forced hours of down-time per year |
|---|---|---|
| Utility supply | | |
| 13.8 kV power source from electric utility | 1.9560 | 2.5820 |
| Protective relays (3) | 0.0006 | 0.0030 |
| 13.8 kV metalclad circuit breaker | 0.0036 | 0.2992[a] |
| Utility source subtotal | 1.9602 | 2.5850 |
| Local cogeneration | | |
| Generator (gas turbine) | 4.5000 | 32.4000 |
| Protective relays (3) | 0.0006 | 0.0030 |
| 13.8 kV metalclad circuit breaker | 0.0036 | 0.2992[a] |
| Cogeneration source subtotal | 4.5042 | 32.4030 |
| Combined utility and cogeneration sources | 0.0353 | 0.0096 |
| Switchgear bus-insulated (connected to 3 breaker) | 0.0102 | 0.2733 |
| Total to point E | 0.0455 | 0.2829 |
| 13.8 kV metalclad circuit breaker | 0.0036 | 0.2992[a] |
| Protective relays (3) | 0.0006 | 0.0030 |
| Cable (13.8 kV); 900 ft conduit below ground | 0.0055 | 0.1458 |
| Cable terminations (6) at 13.8 kV | 0.0018 | 0.0450 |
| Disconnect switch (enclosed) | 0.0061 | 0.0220 |
| Transformer | 0.0030 | 1.0260[a] |
| 480 V metalclad circuit breaker | 0.0027 | 0.0108 |
| Switchgear bus-bare (connected to 7 breakers) | 0.0024 | 0.0576 |
| 480 V metalclad circuit breaker | 0.0027 | 0.0108 |
| 480 V metalclad circuit breakers (5) (failed while opening) | 0.0012 | 0.0048 |
| Cable (480 V); 300 ft conduit above ground | 0.0004 | 0.0044 |
| Cable terminations (2) at 480 V | 0.0002 | 0.0008 |
| Total at 480 V output | 0.0757 | 1.9131 |

[a]Data for hours of downtime per failure are based upon *repair failed unit.*

### 7.1.12.3 Conclusions—Simple radial system with cogeneration

The simple radial system in Example 1 yielded an average forced hours downtime per year that was about twice as large as the radial system with cogeneration in Example 7. The failure rate of the simple radial system was five times larger than the radial system with cogeneration in Example 7.

Copyright © 1998 IEEE. All rights reserved.

### 7.1.13 Overall results from seven examples

The results for the seven examples are compared in Table 7-13 which shows the failure rates and the forced hours downtime per year at the 480 V point of use.

**Table 7-13—Summary—Reliability and availability comparison at 480 V point of use for several power distribution systems**

| Distribution system | Example | Switchover in less than 5 s[a] | | Switchover time 9 min | | λ, failures per year | λ *r*, forced hours of down-time per year |
|---|---|---|---|---|---|---|---|
| | | λ, failures per year | λ *r*, forced hours of down-time per year | λ, failures per year | λ *r*, forced hours of down-time per year | | |
| Simple radial | 1 | | | | | 1.9896 | 4.3033[b] |
| Simple radial with spares | 6 | | | | | 1.9896 | 3.3344[a] |
| Simple radial with cogeneration | 7 | | | | | 0.0757 | 1.9131[b] |
| Primary-selective to 13.8 kV utility supply | 2 | 0.3456 | 1.8835[b] | 1.9896 | 2.1291[b] | | |
| Primary-selective to load side of 13.8 kV circuit breaker | 3 | 0.3448 | 1.6724[b] | 1.9930 | 1.9196[b] | | |
| Primary-selective to primary of transformer (1 h switchover) | 4 | | | | | 1.9896 | 2.9424[b] |
| Secondary-selective | 5 | 0.3175 | 0.2210[c] | 1.9882 | 0.4716[b] | | |

[a]Data for hours downtime per failure are based upon *replace with spare* for 13.8 kV circuit breaker, 13.8 kV cable, and transformer.
[b]Data for hours downtime per failure are based upon *repair failed unit* for 13.8 kV circuit breaker, 13.8 kV cable, and transformer.
[c]Loss of 480 V power for less than 5 s is not counted as a failure.

These data do not include outages for scheduled maintenance of the electrical equipment. It is assumed that scheduled maintenance will be performed at times when 480 V power output is not needed. If this is not possible, then outages for scheduled maintenance would have to be

 Copyright © 1998 IEEE. All rights reserved.

added to the numbers shown in Table 7-13. This would affect a simple radial system much more than a secondary-selective system because of redundancy of electrical equipment in the latter.

### 7.1.14 Discussion—Cost of power outages

The forced hours of downtime per year is a measure of forced unavailability and is equal to the product of (failures per year × average hours) downtime per failure. The average downtime per failure could be called *restorability* and is a very important parameter when the forced hours of downtime per year are determined. The cost of power outages in an industrial plant is usually dependent upon both the failure rate and the restorability of the power system. In addition, the cost of power outages is also dependent on the "plant restart time" after power has been restored (see Gannon [B3]). The "plant restart time" would have to be added to the "average downtime per failure" *r*, in Table 7-13 when cost vs. reliability and availability studies are made in the design of the power distribution system.

The IEEE Committee Report on the Reliability Survey of Industrial Plants [B8] found that the average "plant restart time" after a failure that caused complete plant shutdown was 17.4 h. The median value was 4.0 h.

### 7.1.15 Discussion—Definition of power failure

A failure of 480 V power was defined in the seven examples as a complete loss of incoming power for more than 5 s. This is consistent with the results obtained from the IEEE Committee Report on the Reliability Survey of Industrial Plants [B8], which found a median value of 10 s for the "maximum length of power failure that will not stop plant production."

### 7.1.16 Discussion—Electric utility power supply

Previous reliability studies (see Dickenson et al., [B1], Heising [B5], and Dunkijacobs [B6]) have drawn conclusions similar to those made in this chapter. All of these previous studies have identified the importance of two separate power supply sources from the electric utility. The Power System Reliability Subcommittee made a special effort to collect reliability data on double-circuit utility power supplies in an IEEE survey (see IEEE Committee Report [B7]). These data are summarized in Table 7-3 and were used in Examples 2 through 5. The two power sources in a double-circuit utility supply are not completely independent, and the reliability and availability analysis must take this into consideration. The importance of this point is shown in Table 7-14, where a reliability and availability comparison is made between the actual double-circuit utility power supply and the calculated value from two completely independent utility power sources.

The actual double-circuit utility power supply has a failure rate more than 200 times larger than two completely independent utility power sources. The actual double-circuit utility power supply data came from an IEEE survey (see IEEE Committee Report [B7]) and are based upon 77 outages in 246 unit-years of service at 45 plants with "all circuit breakers closed." This is a broad composite from many industrial plants in different parts of the country.

Copyright © 1998 IEEE. All rights reserved.

**Table 7-14—Comparison of actual and calculated reliability and availability of double-circuit utility power supply (failure defined as loss of both power sources)**

| | $\lambda$, failures per year | $\lambda r$, forced hours of downtime per year |
|---|---|---|
| Actual single-circuit utility power supply from IEEE survey (IEEE Committee Report [B7]) | 1.956[a] | 2.582[a] |
| Actual double-circuit utility power supply from IEEE survey (IEEE Committee Report [B7]) | 0.312[a] | 0.1622[a] |
| Calculated-two utility power sources at 13.8 kV that are completely independent | 0.0012[b] | 0.0008[b] |

[a]Taken from Table 7-3.
[b]Calculated using single-circuit utility power supply data and the formula for parallel reliability shown in Figure 7-1.

It is believed that utility supply failure rates vary widely in various locations. One significant factor in this difference is believed to be different exposures to lightning storms. Thus, average values for the utility supply failure rate may not be valid for any one location. Local values should be obtained, if possible, from the utility involved, and these values should be used in reliability and availability studies.

Example 7 is included to show the reliability and availability improvement that could be obtained by using local generation rather than purchased power from an electric utility. It is of interest to note the very high reliability of local generation equipment found in the IEEE Committee Report on the Reliability Survey of Industrial Plants (see Appendix A).

### 7.1.17 Other discussion

The reliability and availability analysis in the seven examples was done for 480 V low-voltage power distribution systems. It is believed that 600 V systems would have similar reliability and availability.

One of the assumptions made in the reliability and availability analysis is that the failure rate of the electrical equipment remains constant with age. It is believed that this assumption does not introduce significant errors in the conclusions. However, it is suspected that the failure rate of cables may change somewhat with age. In addition, data collected by the Edison Electric Institute on failures of power transformers above 2500 kVA show that the failure rate is higher during the first few years of service. See Table 3-7 in Chapter 3 for the results of an IEEE transformer reliability survey of industrial plants. The reliability data collected in other IEEE surveys (see IEEE Committee Report [B8]) did not attempt to determine how the failure rate varied with age for any electrical equipment studied.

 Copyright © 1998 IEEE. All rights reserved.

A logical question to ask is, “How accurate are reliability and availability predictions?” It is believed that the predicted failure rates and forced outage hours per year are at best only accurate to within a factor of 2 to what might be achieved in the field. However, the relative reliability and availability comparison of the alternative power distribution systems studied should be more accurate than 2 to 1.

The Rome Air Development Center of the U.S. Air Force has had considerable experience comparing the predicted reliability of Electronic Systems with the actual reliability results achieved in the field. These results (see Feduccia and Klion [B2]) show that there is approximately a 12% chance that the field failure rate will be more than 2 to 1 worse than the reliability prediction made using a reliability handbook for electronic equipment (see *Reliability Stress and Failure Rate Data for Electronic Equipment* [B11]). It might be expected that the prediction of reliability of industrial power systems would have an accuracy similar to that obtained by the U.S. Air Force with electronic systems.

Some of the errors introduced when making reliability and availability predictions using published industry failure rates for the electrical equipment are

a) All details that could contribute to unreliability are not included in the study.
b) Some of the contributions from human error may not be properly included.
c) Equipment failure rates can be influenced by the adequacy of the preventive maintenance program used (see IEEE Committee Report [B8] and Wells [B12]). Contamination from the environment can also have an influence on equipment failure rates.
d) Correct conclusions can be made from statistical analysis on the average. But some plants will never experience these “average” problems. For example, several plants will never have a transformer failure.

In spite of these limitations, it is believed that reliability and availability analyses can be very useful in cost/reliability and cost/availability tradeoff studies during the design phase of the power distribution system.

### 7.1.18 Spot network

A spot network would have a calculated reliability and availability approximately the same as the automatic throwover secondary-selective system (see Heising [B5] and Heising and Dunkijacobs [B6]). In addition, it would have the benefit of no momentary outage in the event of a failure of any of the 13.8 kV cables or equipment since bus voltage is not lost on a spot network.

### 7.1.19 Protective devices other than drawout circuit breakers

The seven examples in this chapter used drawout circuit breakers as protective devices. Other types of protective devices are also available for use on power systems. The examples in this chapter attempted to show how to make reliability and availability calculations. No attempt was made to study the effect on reliability and availability of different types of protective devices nor to draw conclusions that any particular type of protective device was more cost effective than another.

Copyright © 1998 IEEE. All rights reserved.

## 7.2 Cost data applied to examples of reliability and availability analysis of common low-voltage industrial power distribution systems

### 7.2.1 Cost evaluation of reliability and availability predictions

In this subclause, cost evaluations are made of the reliability and availability predictions of five power distribution system examples from 7.1. The RR method described in 2.2.3.1 is utilized in order to determine the most cost-effective system.

### 7.2.2 Description of cost evaluation problem

Management insists that the engineer utilize an economic evaluation in any capital improvement program. The elements to be included and a method of mathematically equating the cost impact to be expected from electrical interruptions and downtimes against the cost of a new system were presented in 2.2. It was pointed out that there are several acceptable ways of accomplishing the detailed economic analysis for evaluation of systems with varying degrees of reliability. One of those considered acceptable, the RR method was presented in detail, and this method will be used in the analysis of four examples.

The five example systems included are

*Example 1*—Simple radial system—Single 13.8 kV utility supply

*Example 2b*—Primary-selective system to 13.8 kV utility supply (dual)—Switchover time less than 5 s

*Example 4*—Primary-selective system to primary of transformer—13.8 kV utility supply (dual)—Manual switchover in 1 h

*Example 5b*—Secondary-selective system with switchover time less than 5 s

*Example 7*—Simple radial system with cogeneration

Table 7-13 lists the expected failures per year and the average downtime per year for each of the examples. These data will be used to show which of the examples has the minimum revenue requirement making allowances for

a) Plant startup time
b) Revenues lost
c) Variable expenses saved
d) Variable expenses incurred
e) Investment
f) Fixed investment charges

One of the benefits of such a rigidly structured analysis is that the presentation is made in a sequential manner utilizing cost/failure data prepared with the assistance of management. With this arrangement, the results of the evaluation are less likely to be questioned than if a less sophisticated method was used.

 Copyright © 1998 IEEE. All rights reserved.

### 7.2.3 Procedures for cost analyses

Utilizing the single-line diagrams for the four examples, a component quantity take-off of each system was made, and a present-day installed unit costs assigned for each component. In the case of the dual 13.8 kV utility company's supply, the basic cost of the second supply was estimated on the basis of a hypothetical case, assuming that a one-time only cost would be incurred. The extension of the costs results in the overall installed cost for each of the four examples. A summary of the installed costs is presented in Table 7-15. The total installed costs for each example are listed again after item (12) in Table 7-16.

**Table 7-15—Installed costs[a]**
**Part 1: Primary and secondary selective systems**

| Item | Unit cost | Example 2b | | Example 4 | | Example 5b | |
|---|---|---|---|---|---|---|---|
| | | Primary-selective system to 13.8 kV | | Primary-selective system to primary of transformer utility supply | | Secondary-selective system | |
| | | Quantity | Total cost | Quantity | Total cost | Quantity | Total cost |
| **Utility service standby charge** | | **Lump sum[b]** | **$200 000** | **Lump sum[b]** | **$200 000** | **Lump sum[b]** | **$200 000** |
| Basic equipment | | | | | | | |
| High-voltage circuit breaker, each | $40 000 | 1 | 40 000 | 2 | 80 000 | 2 | 80 000 |
| High-voltage circuit cable, linear feet | 30 | 600 | 18 000 | 1200 | 36 000 | 1200 | 36 000 |
| 1000 kVA transformer with 2-position switch, each | 48 000 | 1 | 48 000 | — | — | 2 | 96 000 |
| 1000 kVA transformer with 3-position switch, each | 62 000 | — | — | 1 | 62 000 | — | — |
| 1600 A low-voltage circuit breaker, each | 12 000 | 1 | 12 000 | 1 | 12 000 | 3 | 36 000 |
| 600 A MCCB, each | 5 000 | 1 | 5 000 | 1 | 5 000 | 1 | 5 000 |
| Low-voltage cable, linear feet | 50 | 300 | 15 000 | 300 | 15 000 | 300 | 15 000 |
| Subtotal—Basic equipment cost | | | $138 000 | | $210 000 | | $268 000 |
| Total cost | | | $338 000 | | $410 000 | | $468 000 |

[a]All cost estimates were made in 1996.
[b] Estimates based on the assumption that the utility company's alternate primary service will require 4 mi of 13.8 kV pole line and a 4000 kVA reserve capacity in the utility company's substation.

Copyright © 1998 IEEE. All rights reserved.

**Table 7-15—Installed costs[a]**
**Part 2: Simple radial systems**

| Item | Unit cost | Example 1 | | Example 7 | |
|---|---|---|---|---|---|
| | | Simple radial system single 13.8 kV utility supply | | Simple radial system with cogeneration | |
| | | Quantity | Total cost | Quantity | Total cost |
| **Utility service standby charge** | | — | — | — | — |
| Basic equipment | | | | Lump sum cogeneration plant 1000 kW | $250 000 |
| High-voltage circuit breaker, each | $40 000 | 1 | 40 000 | 3 | 120 000 |
| High-voltage circuit cable, linear feet | 30 | | 18 000 | 600 | 18 000 |
| 1000 kVA transformer with 2-position switch, each | 48 000 | — | 48 000 | 1 | 48 000 |
| 1000 kVA transformer with 3-position switch, each | 62 000 | 1 | — | — | — |
| 1600 A low-voltage circuit breaker, each | 12 000 | 1 | 12 000 | 1 | 12 000 |
| 600 A MCCB, each | 5 000 | 1 | 5 000 | 1 | 5 000 |
| Low-voltage cable, linear feet | 50 | 300 | 15 000 | 300 | 15 000 |
| Subtotal—Basic equipment cost | | | $138 000 | | $268 000 |
| Total cost | | | $138 000 | | $468 000 |

[a]All cost estimates were made in 1996.
[b] Estimates based on the assumption that the utility company's alternate primary service will require 4 mi of 13.8 kV pole line and a 4000 kVA reserve capacity in the utility company's substation.

The RR method is used to calculate the total cost in dollars per year of both the "installed cost" and the "cost of unreliability" for the four examples. The methods for making these calculations are tabulated in Table 7-16. The reliability data and the assumed cost values used are described in the next two subclauses.

### 7.2.4 Reliability data for examples

Table 7-13 can be used to determine the failures per year, $\lambda$, and the "average hours downtime per failure," $r$, for each of the examples. The value of $r$ is determined from dividing $\lambda r$ by $\lambda$. The values of $r$ and $\lambda$, for the four examples are shown after (1) and (10) respectively in Table 7-16.

 Copyright © 1998 IEEE. All rights reserved.

## Table 7-16—Sample reliability economics problem[a]

| | | | Example 1 | Example 2b | Example 4 | Example 5b | Example 7 |
|---|---|---|---|---|---|---|---|
| | | | **Simple radial system single 13.8 kV utility supply** | **Primary-selective system to 13.8 kV utility supply[b]** | **Primary-selective system[b] primary of transformer** | **Secondary-selective system[c]** | **Simple radial system with cogeneration** |
| (1) | $r$ = | Component repair time or transfer | 2.16 | 5.45 | 1.48 | 0.69 | 25.27 |
| (2) | $s^d$ = | Plant start-up time, hours per failure | 10 | 10 | 10 | 10 | 10 |
| (3) | $r + s$ = | [Items (1) + (2)] | 12.16 | 15.45 | 11.48 | 10.69 | 35.27 |
| (4) | $g_p{}^d$ = | Revenue lost per hour of plant downtime, $/h | $22 000 | $22 000 | $22 000 | $22 000 | $22 000 |
| (5) | $x_p{}^d$ = | Variable expenses saved, $/h | $16 000 | $16 000 | $16 000 | $16 000 | $16 000 |
| (6) | $g_p - x_p$ = | [Items (4) – (5)] Value of lost production, $/h | $6 000 | $6 000 | $6 000 | $6 000 | $6 000 |
| (7) | $(g_p - x_p)(r + s)$ | [Items (6) × (3)] $/failure | $72 960 | $92 700 | $68 880 | $64 140 | $211 620 |
| (8) | $x_1{}^d$ = | Variable expenses incurred per failure, $/failure | $55 000 | $55 000 | $55 000 | $55 000 | $55 000 |
| (9) | | [Items (7) + (8)] $/failure | $127 960 | $147 700 | $123 880 | $119 140 | $266 620 |
| (10) | $\lambda$ = | Failure rate per year | 1.99 | 0.35 | 1.99 | 0.32 | 0.08 |



Copyright © 1998 IEEE. All rights reserved.

**Table 7-16—Sample reliability economics problem[a] (*Continued*)**

| | | | Example 1 | Example 2b | Example 4 | Example 5b | Example 7 |
|---|---|---|---|---|---|---|---|
| | | | **Simple radial system single 13.8 kV utility supply** | **Primary-selective system to 13.8 kV utility supply[b]** | **Primary-selective system[b] primary of transformer** | **Secondary-selective system[c]** | **Simple radial system with cogeneration** |
| (11) | $X$ = | [Items (9) × (10)] $/year | $254 640 | $51 695 | $246 521 | $38 125 | $21 330 |
| (12) | $C$ [d] = | Investment, $ | $138 000 | $338 000 | $410 000 | $468 000 | $468 000 |
| (13) | $F$ [d] = | Fixed investment charge factor, per year | 0.4 | 0.4 | 0.4 | 0.4 | 0.4 |
| (14) | $CF$ = | Fixed investment charges, $/year | $55 200 | $135 200 | $164 000 | $187 200 | $187 200 |
| (15) | $G$ = $X + CF$ | [Items (11) + (14)], Minimum revenue requirement, $/year | $309 840 | $186 895 | $410 521 | $225 325 | $208 530 |
| | | Economic choice | | Example 2b | | | |

[a]All cost estimates were made in 1976 and updated to 1996.
[b] Manual switchover time 1 h.
[c]Switchover time less than 5 s.
[d]Assumed values in this sample problem.



Copyright © 1998 IEEE. All rights reserved.

### 7.2.5 Assumed cost values

The following common cost factors were assumed in 1976 and updated in 1996 for use in all four of the examples:

10 h/failure—Plant startup time after a failure, *s*,
$22 000/h—Revenues lost per hour of plant downtime, $g_p$,
$16 000/h—Variable expenses saved per hour of plant downtime, $x_p$,
$55 000/failure—Variable expenses incurred per failure, $x_i$,
0.4 per year—Fixed investment charge factor, *F*.

These values are shown in Table 7-16 after (2), (4), (5), (8), and (13), respectively.

### 7.2.6 Results and conclusions

The minimum revenue requirements for each of the five examples are shown in item (15) at the bottom of Table 7-16. Some of the conclusions that can be made are tabulated below:

*Example 1*— Simple radial system

This system requires the least initial investment ($138 000); however, its MRR of $309 840 per year is the second highest of the five examples analyzed.

*Example 2b*—Primary-selective system to 13.8 kV utility supply (dual) with switchover time less than 5 s

This system requires an initial investment of $338 000 or 2.4 times that of the simple radial system; however, the MRR is $186 895 per year, which is the least of the five examples.

Based on the data presented, Example 2b would be selected since it has the lowest MRR.

*Example 4*—Primary-selective system to primary of transformer, 13.8 k V utility supply (dual)—Manual switchover time of 1 h

This system shows next to highest initial cost of $410 000 and the highest MRR of $410 521 per year. A major contributor to the high MRR is the fact that while a dual system has been provided, the utility supplies' 1 h manual switchover requirement increases the failure rate and downtime to account for its high MRR. If an automatic switchover were utilized, the example would be competitive with Example 2b.

*Example 5b*—Secondary-selective system with switchover time less than 5 s

This system requires the highest initial investment ($468 000) and produces the third lowest MRR of $225 325 per year.

*Example 7*—Simple radial system with cogeneration

Copyright © 1998 IEEE. All rights reserved.

This system matches Example 5b (secondary-selective system with switchover time less than 5 s) with the highest initial investment of $468 000 and produces the second lowest MRR of $208 530 per year.

## 7.3 Bibliography

[B1] Dickenson, W. H., Gannon, P. E., Heising, C. R., Patton, A. D., and McWilliams, B.W., "Fundamentals of reliability techniques as applied to industrial power systems," Conference Record 1971, *IEEE Industrial and Commercial Power Systems Technical Conference*, 71C18-IGA, pp. 10–31.

[B2] Feduccia, A. J., and Klion, J., *How Accurate Are Reliability Predictions?* Rome Air Development Center, 1968 Annual Symposium on Reliability, IEEE catalog no. 68C33-R, pp. 280-287.

[B3] Gannon, P. E., "Cost of interruptions: Economic evaluation of reliability," *IEEE Industrial and Commercial Power Systems Technical Conference*, Los Angeles, CA, May 10–13, 1976.

[B4] Garver, D. P., Montmeat, F. E., and Patton, A. D., "Power system reliability I—Measures of reliability and methods of calculation," *IEEE Transactions on Power Apparatus and Systems*, Jul. 1964, pp. 727–737.

[B5] Heising, C. R., "Reliability and availability comparison of common low-voltage Industrial power distribution systems," *IEEE Transactions on Industrial Generator Applications*, vol. IGA-6, Sep./Oct. 1970, pp. 416–424.

[B6] Heising, C. R., Dunkijacobs, J. R., "Application of reliability concepts to industrial power systems," Conference Record 1972, *IEEE Industry Applications Society Seventh Annual Meeting*, 72-CH0685-8-1A, pp. 287–296.

[B7] IEEE Committee Report. "Reliability of electric utility supplies to industrial plants," *IEEE Technical Conference*, 75-CH0947-1-1A, pp. 131–133.

[B8] IEEE Committee Report. "Reliability of industrial plants," *IEEE Transactions on Industry Applications*, Mar./Apr., Jul./Aug., Sep./Oct. 1974, pp. 213–252,456–476, and 681.

NOTE—Bibliographical items [B7] and [B8] are reprinted in Appendixes A, B, and D.

[B9] Love, D. J., "Reliability of utility supply configurations for industrial power systems," *IEEE Transactions on Industry Applications*, vol. 30, no. 5, Sep./Oct. 1994, pp. 1303–1308.

[B10] Patton, A. D., "Fundamentals of power system reliability evaluation," *IEEE Industrial and Commercial Power Systems Technical Conference*, Los Angeles, CA, May 10–13, 1976.

[B11] *Reliability Stress and Failure Rate Data for Electronic Equipment*, MIL-HDBK-217A, Department of Defense, Dec. 1, 1965.

[B12] Wells, S. J., "Electrical preventive maintenance," *IEEE Industrial and Commercial Power Systems Technical Conference*, Los Angeles, CA, May 10–13, 1976.

 Copyright © 1998 IEEE. All rights reserved.

# Chapter 8
# Basic concepts of reliability analysis by probability methods

## 8.1 Introduction

This chapter provides the theoretical background for the reliability analysis used in other chapters, Chapter 2 in particular. Some basic concepts of probability theory are discussed as these are essential to the understanding and development of quantitative reliability analysis methods. Definitions of terms commonly used in system reliability analysis are also included. The three methods discussed are the cut-set, the state-space, and the network reduction methods.

## 8.2 Definitions

The following terms, defined in Chapter 1, are commonly used in system reliability analysis: *component, failure, failure rate, mean time between failures (MTBF), mean time to repair (MTTR),* and *system*. Additional definitions more specifically related to power distribution systems are given in 1.4.

## 8.3 Basic probability theory

This subclause discusses some of the basic concepts of probability theory. An appreciation of these ideas is essential to the understanding and development of reliability analysis methods.

### 8.3.1 Sample space

Sample space is the set of all possible outcomes of a phenomenon. For example, consider a system of three distribution links. Assuming that each link exists either in the operating or "up" state or in the failed or "down" state, the sample space is

$S$ = (1U, 2U, 3U), (1D, 2U, 3U), (1U, 2D, 3U), (1U, 2U, 3D), (1D, 2D, 3U),
(1D, 2U, 3D), (1U, 2D, 3D), (1D, 2D, 3D)

Here *i*U, *i*D denote that the component *i* is up or down, respectively. The possible outcomes of a system are also called "system states," and the set of all possible system states is called "system-state space."

### 8.3.2 Event

In the example of three distribution links, the descriptions (1D, 2D, 3U), (1D, 2U, 3D), (1U, 2D, 3D), and (1D, 2D, 3D) define an event in which two or three lines are in the failed state. Assuming that a minimum of two lines is needed for successful system operation, this set of

Copyright © 1998 IEEE. All rights reserved.

states also defines the system failure. The event *A* is, therefore, a set of system states, and the event *A* is said to have occurred if the system is in a state that is a member of set *A*.

### 8.3.3 Probability

A simple and useful way of looking at the probability of an occurrence of the event is by using a large number of observations.

Consider, for example, that a system is energized at time $t = 0$, and the state of the system is noted at time *t*. This is said to be one observation. Now, if this process is repeated *N* times and the system is observed in the failed state $N_f$ times, the probability of the system being in a failed state at time *t* is

$$P_f(t) = N_f / N \tag{8-1}$$

$N \rightarrow \infty$

### 8.3.4 Combinatorial properties of event probabilities

Certain combinatorial properties of event probabilities that are useful in reliability analysis are discussed in this subclause.

#### 8.3.4.1 Addition rule of probabilities

Two events, $A_1$ and $A_2$, are mutually exclusive if they cannot occur together. For events $A_1$ and $A_2$ that are not mutually exclusive (that is, events which can happen together)

$$P(A_1 \cup A_2) = P(A_1) + P(A_2) - P(A_1 \cap A_2) \tag{8-2}$$

where

$P(A_1 \cup A_2)$ is the probability of $A_1$ or $A_2$, or both happening; and

$P(A_1 \cap A_2)$ is the probability of $A_1$ and $A_2$ happening together.

When $A_1$ and $A_2$ are mutually exclusive, they cannot happen together; that is, $P(A_1 \cap A_2) = 0$, therefore Equation (8-2) reduces to

$$P(A_1 \cup A_2) = P(A_1) + P(A_2) \tag{8-3}$$

#### 8.3.4.2 Multiplication rule of probabilities

If the probability of occurrence of event $A_1$ is affected by the occurrence of $A_2$, then $A_1$ and $A_2$ are not independent events.

 Copyright © 1998 IEEE. All rights reserved.

The conditional probability of event $A_1$, given that event $A_2$ has already occurred, is denoted by $P(A_1 \mid A_2)$ and

$$P(A_1 \cap A_2) = P(A_1 \mid A_2)\, P(A_2) \tag{8-4}$$

This formula is also used to calculate the conditional probability

$$P(A_1 \mid A_2) = P(A_1 \cap A_2) / P(A_2) \tag{8-5}$$

When, however, events $A_1$ and $A_2$ are independent, that is the occurrence of $A_2$ does not affect the occurrence of $A_1$

$$P(A_1 \cap A_2) = P(A_1)\, P(A_2) \tag{8-6}$$

#### 8.3.4.3 Complementation

$\bar{A}_1$ is used to denote the complement of event $A_1$. The component $\bar{A}_1$ is the set of states that are not members of $A_1$. For example, if $A_1$ denotes states indicating system failure, then the states not representing system failure make $\bar{A}_1$.

$$P(\bar{A}_1) = 1 - P(A_1) \tag{8-7}$$

### 8.3.5 Random variable

A random variable can be defined as "a quantity that assumes values in accordance with probabilistic laws." A discrete random variable assumes discrete values, whereas a random variable that assumes values from a continuous interval is termed a "continuous random variable." For example, the state of a system is a discrete random variable, and the time between two successive failures is a continuous random variable.

### 8.3.6 Probability distribution function

Probability distribution function describes the variability of a random variable. For a discrete random variable $X$, assuming values $x_i$, the probability density function is defined by

$$P_X(x) = P\,(X = x) \tag{8-8}$$

The probability density function for a discrete random variable is also called the "probability mass function" and has the following properties:

a) $P_X(x) = 0$ unless $x$ is one of the values $x_0, x_1, x_2, \ldots$
b) $0 \le P_X(x_i) \le 1$
c) $\sum_i P_X(x_i) = 1$

Another useful function is the cumulative distribution function. It is defined by

$$F_X(x) = P\,(X \le x) = \sum P_X(x_i),\ x_i \le x \tag{8-9}$$

Copyright © 1998 IEEE. All rights reserved.

The probability density function $f_X(x)$ [or simply $f(x)$] for a continuous random variable is defined so that

$$P(a \le X \le b) = \int_a^b f(y)\,dy \tag{8-10}$$

If, for example, $X$ denotes the time to failure, Equation (8-10) gives the probability that the failure will occur in the interval $(a,b)$. The corresponding probability distribution function for a continuous random variable is

$$F(x) = P(-\infty \le X \le x) = \int_{-\infty}^{x} f(y)\,dy \tag{8-11}$$

The function $f(x)$ has certain specific properties (see Singh and Billinton [B3][1]) including the following:

$$\int_{-\infty}^{\infty} f(x)\,dx = 1 \tag{8-12}$$

### 8.3.7 Expectation

The probabilistic behavior of a random variable is completely defined by the probability density function. It is often, however, desirable to have a single value characterizing the random variable. One such value is the expectation. It is defined by

$E(X) = \sum_i x_i P_X(x_i)$ for a discrete random variable.

$= \int_{-\infty}^{\infty} x f(x)\,dx$ for a continuous random variable.

The expectation of $X$ is also called the "mean value of $X$" and has a special relationship to the average value of $X$ in that, if the random variable $X$ is observed many times and the arithmetic average of $X$ is calculated, it will approach the mean value as the number of observations increases.

[1]The numbers in brackets preceded by the letter B correspond to those of the bibliography in 8.6.

 Copyright © 1998 IEEE. All rights reserved.

### 8.3.8 Exponential distribution

There are several special probability distribution functions (see Singh and Billinton [B3]); but the one of particular interest in reliability analysis is the exponential distribution, having the probability density function of

$$f(x) = \lambda e^{-\lambda x} \tag{8-13}$$

where $\lambda$ is a positive constant. The mean value of the random variable $X$, with exponential distribution is

$$d = \int_0^\infty x\lambda e^{-\lambda x} \mathrm{d}x \; = \; 1/\lambda \tag{8-14}$$

Also the probability distribution is

$$F(x) \; = \; \int_0^x \lambda e^{-\lambda y} \mathrm{d}y \; = \; 1 - e^{-\lambda x} \tag{8-15}$$

If the time between failures obeys the exponential distribution, the mean time between failures is $d = 1 / \lambda$, where $\lambda$ denotes the failure rate of the component. It should be noted that the failure rate for exponential distribution and only the exponential distribution is constant.

## 8.4 Reliability measures

The term “reliability” is generally used to indicate the ability of a system to continue to perform its intended function. Several measures of reliability are described in the literature, and some of the meaningful indexes for repairable systems, especially power distribution systems, are described in this subclause.

a) *Unavailability.* Unavailability is the “steady-state probability that a component or system is out of service due to failures or scheduled outages.” If only the failed state is considered, this term is called “forced unavailability.”

b) *Availability.* Availability is the “steady-state probability that a component or system is in service.” Numerically, availability is the complement of unavailability, that is

   Availability = 1 – unavailability

c) *Frequency of system failure.* This index can be defined as the “mean number of system failures per unit time.”

d) *Expected failure duration.* This index can be defined as the “expected or long-term average duration of a single failure event.”

Copyright © 1998 IEEE. All rights reserved.

## 8.5 Reliability evaluation methods

Numerical values for reliability measures can be obtained either by analytical methods or through digital simulation. Only the analytical techniques are discussed here (a discussion of the simulation approach can be found in (Singh and Billinton [B3]). The three methods described in this chapter are the state-space, network reduction, and cut-set methods. The state-space method is very general but becomes cumbersome for relatively large systems. The network reduction method is applicable when the system consists of series and parallel subsystems. The cut-set method is becoming increasingly popular in the reliability analysis of transmission and distribution networks and has been primarily used in this book. The state-space and network reduction methods are discussed in this chapter for reference and for the potential benefit to the users of this book.

### 8.5.1 Minimal cut-set method

The cut-set method can be applied to systems with simple as well as complex configurations and is a very suitable technique for the reliability analysis of power distribution systems. A cut-set is a "set of components whose failure alone will cause system failure," and a minimal cut-set has no proper subset of components whose failure alone will cause system failure. The components of a minimal cut-set are in parallel since all of them must fail in order to cause system failure and various minimal cut-sets are in series as any one minimal cut-set can cause system failure.

A simple approach for the identification of minimal cut-sets is described in Chapter 2, but more formal algorithms are also available in the literature (see Singh and Billinton [B3]). Once the minimal cut-sets have been obtained, the reliability measures can be obtained by the application of suitable formulas (see Shooman [B1] and Singh [B2]). Assuming component independence and denoting the probability of failure of components in cut-set $C_1$ by $P(\overline{C_i})$, the probability (unavailability) and the frequency of system failure for $m$ minimal cut-sets are given by

$$
\begin{aligned}
P_f &= P(\bar{C}_1 \cup \bar{C}_2 \cup \bar{C}_3 \cup \ldots \cup \bar{C}_m) \\
&= P(\bar{C}_1) + P(\bar{C}_2) + \ldots + P(\bar{C}_m)\binom{m}{1}\text{terms} - [P(\bar{C}_1) \cap (\bar{C}_2)] + \ldots \\
&+ [P(\bar{C}_1 \cap \bar{C}_j)]\,\mathrm{i} \neq \mathrm{j}\binom{m}{2}\text{terms} \\
&\vdots \\
&(-1)^{m-1} P(\bar{C}_1 \cap \bar{C}_2 \cap \ldots \bar{C}_m)\binom{m}{m}\text{terms}
\end{aligned}
\tag{8-16}
$$

 Copyright © 1998 IEEE. All rights reserved.

where $\bar{C}_1 \cap \bar{C}_2$, for example, denotes the failure of components of both the minimal cut-sets 1 and 2 and, therefore, $P(\bar{C}_1 \cap \bar{C}_2)$ means the probability of failure of all the components contained in $\bar{C}_1$ and $\bar{C}_2$, that is

$$P(\bar{C}_1 \cap \bar{C}_2) = \Pi P_{id} \text{ and } i \in (\bar{C}_1 \cup \bar{C}_2)$$

where

$P_{id}$ is the probability of component $i$ being in the failed state
$= r_i / (d_i + r_i)$.
$= \lambda_i / (\lambda_i + \mu_i)$.
$d_i$ is the MTBF of component $i$.
$\lambda_i$ is the failure rate of component $i$.
$= 1 / d_i$.
$r_i$ is the MTTR of component $i$.
$\mu_i$ is the repair rate of component $i$
$= 1 / r_i$.
$\Pi$ is the product.

The frequency of failure is given by

$$f_f = P(\bar{C}_1)\, W_1 + P(\bar{C}_2) W_2 + \ldots P(\bar{C}_m) W_m - [P(\bar{C}_1 \cap \bar{C}_2)\, W_{1,2} + P(\bar{C}_1 \cap \bar{C}_3) W_{1,3}$$

$$+ \ldots + P(\bar{C}_i \cap \bar{C}_j)\, W_{i,j}],\ i \neq j$$

$$\vdots$$

$$(-1)^{m-1} P(\bar{C}_1 \cap \bar{C}_2 \cap \ldots \bar{C}_m)\, W_{1,2} \ldots, m \qquad (8\text{-}17)$$

where

$$W_{i,j} = \sum_{k \in C_i \cup C_j} \mu_k$$

$$k \in C_i \cup C_j$$

The mean failure duration is given by

$$d_f = P_f / f_f$$

When the mean time between the failure of components is much larger than the mean time to repair (or in other words, the component availabilities approach unity). Equation (8-16) and (8-17) can be approximated (see Singh [B2]) by simpler equations:

Copyright © 1998 IEEE. All rights reserved.

$$P_f = \sum_{i=1}^{m} P(\bar{C}_i) = \sum_{i=1}^{m} Pcs_i \quad (8\text{-}18)$$

and

$$f_f = \sum_{i=1}^{m} P(\bar{C}_i) W_i = \sum_{i=1}^{m} fcs_i \quad (8\text{-}19)$$

where $Pcs_i$ and $fcs_i$ are the probability and frequency of cut-set event $i$, respectively.

Also,

$$d_f = P_f / f_f = \sum_{i=1}^{m} Pcs_i / \sum_{i=1}^{m} fcs_i = \sum_{i=1}^{m} fcs_i rcs_i / \sum_{i=1}^{m} fcs_i \quad (8\text{-}20)$$

where:

$d_f$ is the system mean failure duration; and
$rcs_i$ is the mean duration of cut-set event i.

The application of Equations (8-19) and (8-20) to power distribution systems is discussed in Chapter 2. The components in a minimal cut-set behave like a parallel system, and $fcs_i$ (assuming $n$ components in $C_i$) can be computed as follows:

$$fcs_i = \prod_{j=1}^{n} P_{jd} \sum_{j=1}^{n} \mu_j \quad (8\text{-}21)$$

and

$$rcs_i = 1 / \sum_{j=1}^{n} \mu_j \quad (8\text{-}22)$$

For example, for a cut-set having three components 1, 2, and 3:

$$fcs_i = \frac{\lambda_1\lambda_2\lambda_3(\mu_1 + \mu_2 + \mu_3)}{(\lambda_1 + \mu_1)(\lambda_2 + \mu_2)(\lambda_3 + \mu_3)}$$

$$\approx \lambda_1 \lambda_2 \lambda_3(r_1 r_2 + r_2 r_3 + r_3 r_1), \text{ assuming } \lambda_i << \mu_i$$

and

 Copyright © 1998 IEEE. All rights reserved.

$$rcs_i = \frac{r_1 r_2 r_3}{(r_1 r_2 + r_2 r_3 + r_3 r_1)}$$

### 8.5.2 State-space method

The state-space method is a very general approach and can be used when the components are independent as well as for systems involving dependent failure and repair modes. The different steps of this approach are illustrated using a simple example of a component in series with two parallel components, as shown in Figure 8-1.

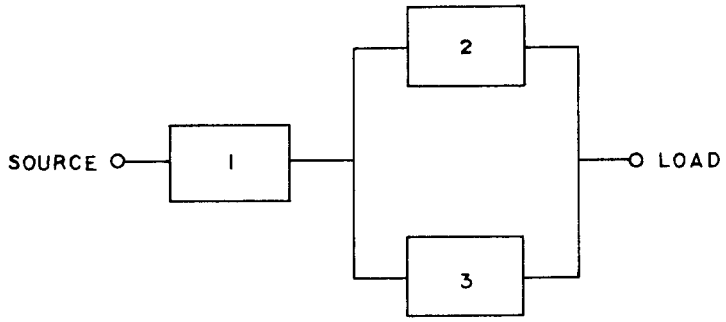


**Figure 8-1—One component in series with two components in parallel**

a) *Enumerate the possible system states.* Assuming each component can exist either in the up or operating state (U) or in the down or failed state (D) and that the components are independent, there are eight possible system states. These states are numbered 1 through 8 in Figure 8-2, and the description of the component states is indicated in each system state.

b) *Determine interstate transition rates.* The transition rate from $s_i$ (that is, state $i$) to $s_j$ is the mean rate of the system passing from $s_i$ to $s_j$. For example, in Figure 8-2 the system can transit from $s_1$ to $s_2$ by the failure of component 1 and the repair of component 1, will put the system back into $s_1$. Therefore, the transition rate from $s_1$ to $s_2$ is $\lambda_1$, and the transition rate from $s_2$ to $s_1$ is $\mu_1$.

c) *Determine state probabilities.* When the components can be assumed to be independent, state probabilities can be found by the product rule as indicated in Equation (8-6).When, however, statistical dependence is involved, a set of simultaneous equations needs to be solved to obtain state probabilities (see Singh and Billinton [B3]). Only the independent case is discussed here and for this, say the probability of being in state 2 can be determined by

$$P_2 = P_{1d}\, P_{2u}\, P_{3u} \tag{8-23}$$

Copyright © 1998 IEEE. All rights reserved.

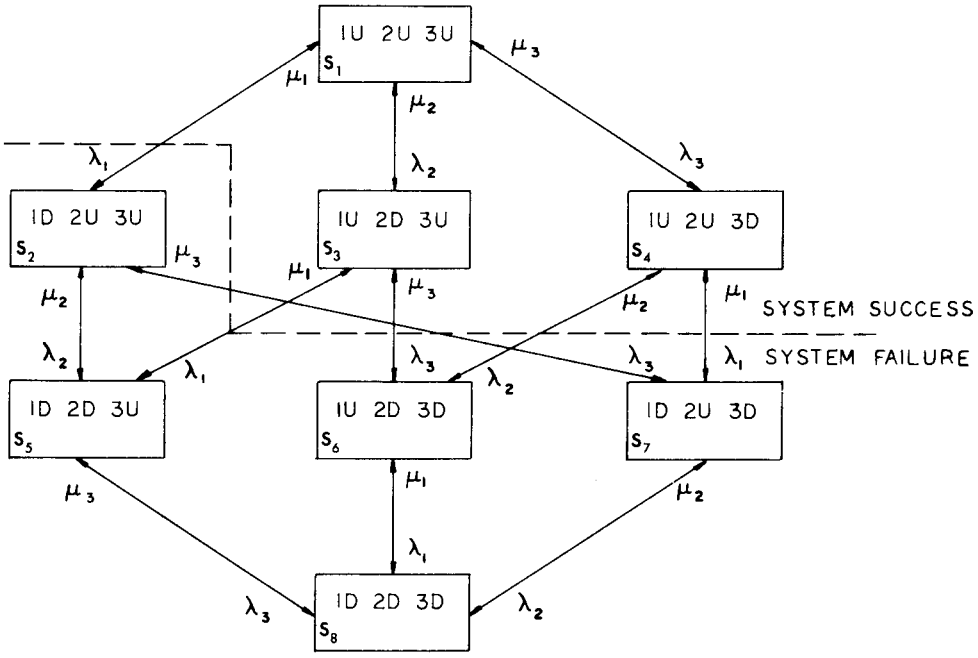


**Figure 8-2—State transition diagram for the system shown in Figure 8-1**

where

$P_{iu}$ is the probability of component *i* being in "up" (operating) state
$= d_i / (d_i + r_i)$
$= \mu_i / (\lambda_i + \mu_i)$.

and

$P_{id}$ is the probability of component *i* being in "down" (failed) state
$= r_i / (d_i + r_i)$
$= \lambda_i / (\lambda_i + \mu_i)$.

d) *Determine Reliability Measures.* The states contributing the failure, or success, or any other event of interest are identified. For the system shown in Figure 8-1, if the links 2 and 3 are fully redundant, system failure can occur if either component 1 fails, or components 2 and 3 fail, or if all components fail. The state space *S* is shown in Figure 8-2 is

$S = \{1, 2, 3, 4, 5, 6, 7, 8\}$

 Copyright © 1998 IEEE. All rights reserved.

The subset $A$ (representing failure) can be identified as:

$A = \{2, 5, 6, 7, 8\}$

and the subset representing the success states is

$S - A = \{1, 3, 4\}$

Unavailability or the probability of the system being in the down state is now given by

$$P_f = \sum_{i \in A} P_i \tag{8-24}$$

where $i \in A$ indicates that summation is over all states contained in subset $A$.

Applied to our example

$P_f = P_2 + P_5 + P_6 + P_7 + P_8$

where $P_i$ can be found by the product rule (see Equation (8-23).

The frequency of system failure, that is, the frequency of encountering subset $A$, can be computed by the following relationship:

$$f_f = \sum_{i \in A} P_i \sum_{j \in A} \lambda_{ij} \tag{8-25}$$

where $\lambda_{ij}$ equals the transition rate from state $i$ to state $j$.

$f_f = P_1\lambda_1 + P_3(\lambda_1 + \lambda_3) + P_4(\lambda_1 + \lambda_2)$

The mean failure duration can be obtained from $P_f$ and $f_f$ using

$$d_f = P_f / f_f \tag{8-26}$$

In the preceding analysis, it was assumed that the failure of a component does not alter the probability of failure of the remaining components. If, however, it is assumed that after the system failure, no further component failure will take place, the state transition diagram in Figure 8-2 will be modified as shown in Figure 8-3. Once component 1 fails or components 2 and 3 fail, no further failure is possible. The probabilities in this case cannot be calculated by simple multiplication; they can be computed by solving a set of linear equations (see Singh and Billinton [B3]). Once the state probabilities have been calculated, the remaining procedure is the same.

Copyright © 1998 IEEE. All rights reserved.

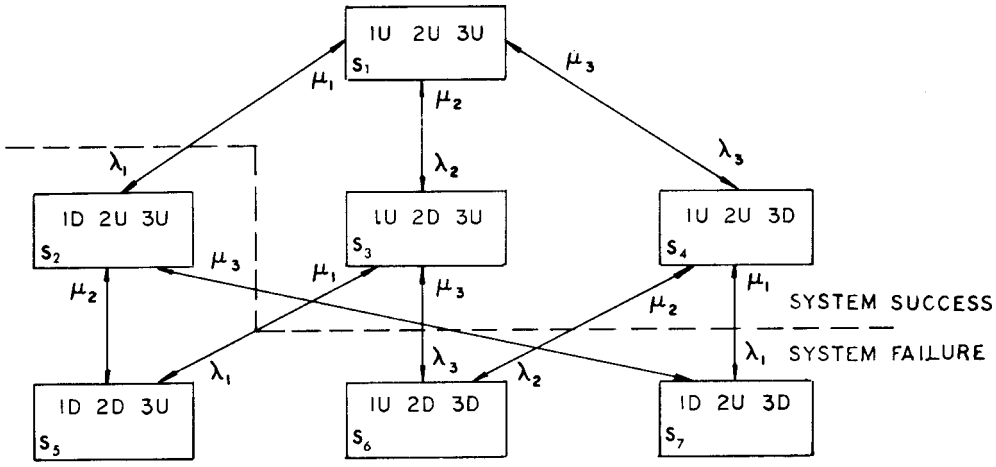


**Figure 8-3—State transition diagram for the system shown in Figure 8-1 when components are not independent**

### 8.5.3 Network reduction method

The network reduction method is useful for systems consisting of series and parallel subsystems. This method consists of successively reducing the series and parallel structures by equivalent components. Knowledge of the series and parallel reduction formulas is essential for the application of this technique.

### 8.5.4 Series system

The components are said to be in series when the failure of any one component causes system failure. It should be noted that the components do not have to be physically connected in series; it is the effect of failure that is important. Two types of series systems are discussed in 8.5.4.1 and 8.5.4.2.

#### 8.5.4.1 Independent components

For the series system of independent components, the failure and repair rate the equivalent component are given by

$$\lambda_s = \sum_{i=1}^{n} \lambda_i \qquad (8\text{-}27)$$

 Copyright © 1998 IEEE. All rights reserved.

and

$$\mu_s = \lambda_s \Big/ \left( \prod_{i=1}^{n} (1 + \lambda_i \ / \ \mu_i) - 1 \right) \tag{8-28}$$

where $\lambda_s$ and $\mu_s$ are the equivalent failure and repair rates of the series system and

$\prod_{i=1}^{n}$ denotes the product of values 1 through $n$ ($n$ being the number of components).

Assuming the $\lambda_i$ is much smaller than $\mu_i$ (which, in other words, means that the MTBF is much larger than the MTTR), the quantities involving the products of $\lambda_i$ can be neglected. Equation (8-27) reduces to

$$r_s = 1 / \mu_s = \sum_{i=1}^{n} r_i \lambda_i \ / \ \lambda_s \tag{8-29}$$

### 8.5.4.2 Components involving dependence

When it is assumed that after the system failure no more components will fail, the equivalent failure and repair parameters are

$$\lambda_s = \sum_{i=1}^{n} \lambda_i \text{ and } r_s = \sum_{i=1}^{n} r_i \lambda_i \ / \ \lambda_s \tag{8-30}$$

It can be seen from Equations (8-28) and (8-29) that, for component MTBF to be much larger than MTTR, the $r_s$ for the dependent and independent cases should be practically equal.

### 8.5.5 Parallel system

Two components are considered in parallel when either can ensure system success. The equivalent failure and repair rates of a parallel system of two components are given by

$$\lambda_p = \frac{\lambda_1 \lambda_2 (r_1 + r_2)}{1 + \lambda_1 r_1 + \lambda_2 r_2} \tag{8-31}$$

and

$$\mu_p = \mu_1 + \mu_2 \tag{8-32}$$

If $\lambda_1 r_1$ and $\lambda_2 r_2$ are much smaller than 1, then Equation (8-30) can be written as

$$\lambda_p = \lambda_1 \lambda_2 (r_1 + r_2) \tag{8-33}$$

Copyright © 1998 IEEE. All rights reserved.

## 8.6 Bibliography

[B1] Shooman, L. M., *Probabilistic Reliability: An Engineering Approach*, New York: McGraw-Hill, 1968.

[B2] Singh, C., "On the behavior of failure frequency bounds," *IEEE Transactions on Reliability*, vol. R-26, Apr. 1977, pp. 63–66.

[B3] Singh, C., and Billinton, R., *System Reliability Modelling and Evaluation*, London, England: Hutchinson Educational, 1977.

 Copyright © 1998 IEEE. All rights reserved.

# Chapter 9
# Voltage sag analysis

## 9.1 Introduction

Voltage sags, also referred to as dips, are important to industrial reliability. Modern process controls are sometimes very sensitive to voltage sags. The combination of voltage sags and sensitive equipment may cause significant production outages. Less sensitive equipment may be available, but the designer must know sag characteristics of the electric system to make the best choices between equipment immunity and equipment cost. Chapter 9 develops predictive techniques for sags from faults on power systems and offers a method for estimating the number of sag-related disruptions.

Voltage sags are very different from service interruptions covered by other chapters of this recommended practice. An interruption is caused by a complete separation of a load from the source of electric energy. A voltage sag is a sudden voltage drop while the load remains connected to the supply. Sags are usually caused by insulation failures or faults on power systems. Sags may also be caused by sudden load changes, such as starting large motors.

Utilization equipment can be very sensitive to voltage sags. There are reports that voltage sags to 85–90% of nominal lasting time as short as 16 ms have triggered immediate outages of critical industrial processes. Equipment in this sensitivity range is likely to be upset by voltage sags an order of magnitude much more often than from interruptions. Production employees often notice the lights blink or dim, just when the critical process fails. Many incorrectly conclude the plant experienced an interruption instead of a voltage sag.

It is possible to design equipment that will survive even severe voltage sags, but the equipment may be more expensive. Accurate estimates of sag magnitude and duration probabilities help system designers to specify appropriate equipment for critical processes. This chapter shows how to combine accepted analysis tools to predict the important voltage sag characteristics. The basic tools include a computer program to calculate unbalanced fault currents and voltages, reliability data, and fault-clearing device characteristics (see Voltage Sag Working Group [B17]).[1]

Calculations can be performed by any of several good computer short-circuit analysis programs. These programs allow users to accurately model the electrical network, apply short circuits around the network, and look at the resulting voltage on any bus of interest. Some software producers have used drafts of this chapter to automate most of the steps for sag predictions. These techniques allow engineers to anticipate and possibly minimize voltage sag problems.

The ability to predict voltage sag characteristics offers a unique opportunity to evaluate alternate configurations and prevent problems with optimum supply and ride-through specifications. Problems may be avoided by reducing voltage sag magnitude, duration, or the number

[1]The numbers in brackets preceded by the letter B correspond to those of the bibliography in 9.9.

Copyright © 1998 IEEE. All rights reserved.

of sag events. Modest changes in equipment specifications also can significantly reduce the number of nuisance outages from voltage sags.

## 9.2 Voltage sag characteristics and reporting

Magnitude and duration are two very important sag characteristics. Sag magnitude, in this chapter, is the net rms voltage in percent or per-unit of system nominal voltage. Sag magnitude is the remaining voltage. (Voltage dip definitions often refer to a percent reduction or what was lost.) This sag magnitude definition more closely matches the output of computer programs used to calculate sags. Sag duration is the time the voltage is low, usually less than 1 s.

According to IEEE Std 1159-1995 [B2], sag magnitudes range from 10% to 90% of nominal voltage and sag durations from one half-cycle to 1 min. The voltage sag coordination method described in this chapter works independently of these ranges. Actually, from an equipment or production process point of view, it does not matter whether a trip is due to a voltage sag, a swell, a momentary interruption, or a sustained interruption.

A variety of definitions and reporting philosophies were under consideration as this chapter was being prepared. Work to standardize is in progress and may be complete before the next revision of this recommended practice. Users of this technique may wish to review other standards developments for preferred methods to report results. The following discussion offers various methods that may apply to individual situations. It demonstrates the need for clarity in reporting results. It is highly recommended that reports of voltage sag predictions or results from power quality monitoring clearly identify which methods are used, e.g., for number of phases and for reclosing.

### 9.2.1 Number of phases

Voltage sags normally affect each phase of a three-phase system differently. One, two, or all three phases may see voltages low enough to be called a sag for any one fault event. Even if all three phases experience a sag, the magnitudes will often be different. For a sag in three phases it is thus not immediately evident which magnitude should be taken as the sag magnitude.

One approach is to present only the lowest of the three phase voltages for each event. This implies a three-phase load that is sensitive to the lowest of the three phases, or single phase devices spread over the three phases where tripping of one of them interrupts the production process. This method reports only one sag per fault. However, three-phase equipment may be able to survive a severe sag on one phase if the other phases remain reasonable good. Likewise, the same equipment may not survive a less severe sag reported in this way if the other phases are equally low.

A second approach is to report each of the three phases as separate events. This implies single phase loads or at least single phase controllers. For monitoring results, the numbers of sags in each of the three phases have to be averaged to obtain an estimation of the number of sags a

 Copyright © 1998 IEEE. All rights reserved.

single-phase load can expect. (Note that line-to-line connected load might experience a different number of sags than a load connected line-to-neutral.) For prediction methods normally only the voltages for a single-line-to-ground fault in one phase are calculated. In reality all three phases have an equal probability of a fault. This implies that a sag due to a single-line-to-ground fault or due to a line-to-line fault counts as 1/3 sag with the magnitude of the voltage in phase A, 1/3 sag with the magnitude of the voltage in phase B, and 1/3 sag with the magnitude of the voltage in phase C. A sag due to a three-phase fault simply counts as one sag.

A third approach assumes three phase loads sensitive to the average voltage of the three phases. This method reports only one sag per event. The reported sag magnitude is therefore the average of the three phases. This magnitude normally does not match any of the three individual phase sag voltages.

### 9.2.2 Accounting for reclosing—how many sags?

Automatic reclosing is common for medium- and high-voltage supply systems exposed to weather elements. This presents another problem for reporting and calculating sag frequency. There are two general methods for reporting the number of sags in the presence of reclosing.

One method counts multiple sags as one sag if they occur within a short period of time, i.e., within 5 min. For example, two sags caused by a high-speed reclose and trip operation count as one sag. The basis for this approach is that utilization equipment will fail on the first sag. Additional sags before the sensitive equipment returns to service are of little interest because they do not affect production. The difficulty is selecting a time period where repeating sags count as one. This may vary with particular production processes. Sometimes during adverse weather, the next sag may also occur before the sensitive equipment returns to normal operation. A problem reported but not documented is that a device could be able to withstand the first sag but will trip on the second or third one.

A second method counts all events even if they occur within a few seconds. For example, two sags caused by a high-speed reclose and trip operation count as two sags. This is a more accurate accounting of sag events but may overestimate the number of nuisance shutdowns.

For power quality monitoring, either method can be implemented in the monitoring equipment. But prediction techniques depend on reported failure data. The failure data may count each event or it may count several events as one if they all happened in the same automatic reclosing sequence. Sag predictions must accurately consider all of these variations to produce accurate results.

### 9.2.3 Reporting sag duration

Reporting sag duration presents problems for nonrectangular sags. Most of the techniques in this chapter assume rectangular sags where the duration is clear. However, there are some cases where sags are not rectangular. Faults sometimes change impedance and phase involvement as the fault progresses. The sag may have two or more magnitudes during one event. Large motor loads also modify the shape of sags (see Bolen [B3]). The duration may be the

Copyright © 1998 IEEE. All rights reserved.

total time the voltage level meets the sag definition or it could be something else defined by the user. Again, accurate predictions of the number of spurious trips for process equipment will need an accurate understanding of the reported results.

## 9.3 Line faults—A major cause for voltage sags

Some studies found that nearly all disruptive voltage sags were caused by current flowing to short circuits either within the plant or on utility lines in the electrical neighborhood (see Conrad et al., [B5] and Key [B14]). Motor starting and welders can also cause voltage sags with predictable characteristics. This chapter concentrates on sags associated with short circuits (i.e., faults) on the electrical supply system. The principal voltage drop occurs only while short-circuit current flows. Voltage increases as soon as a fault clearing device interrupts the flow of current. These faults may be many kilometers from the interrupted process, but close enough to cause problems. A clear understanding of voltage drop during faults and the fault-clearing process is necessary before attempting to make accurate voltage sag predictions.

Consider the simple distribution system in Figure 9-1 to understand how faults create voltage sags. It shows a 20 MVA substation with three distribution feeders. Each feeder has a circuit breaker with protective relays to detect and clear faults. Feeder F1 shows more detail with fuses and reclosers. Point “C” is an industrial or commercial site supplied 480Y/277 V from a distribution transformer.

The lower half of Figure 9-1 shows what happens to the rms voltage when a temporary three-phase fault occurs at “A” on feeder F2. The dashed line shows the rms voltage at point “B,” and the solid line shows rms voltage on feeders F1 and F3 during the same fault. The load at “C” will also see the voltage represented by the solid line. A time line shows the sequence of events. Note that F2 uses reclosing relays. Reclosing can cause several sags for one permanent fault. Also, the voltage decay on the first interruption represents motor voltage decay. The motors trip off before the reclose.

All loads on F2 including “B” suffer a complete interruption when breaker F2 clears the fault. All loads on F1 and F3 see two voltage sags. The first sag begins at the initiation of the fault. The second sag begins when breaker F2 recloses. Sags occur whenever fault current flows through impedance to a fault. Voltage returns to normal on feeders F1 and F3 once the breaker on F2 interrupts the flow of current. Unfortunately, sensitive loads on F1 and F3 experience a production outage if the sag magnitude and duration are more severe than the withstand capability of the sensitive load. Sags also occur for single- and two-phase faults. The magnitude is often different on each of the three phases. (See 9.4.1.)

Faults on industrial and commercial power systems produce the same voltage sag phenomena. A fault on one feeder drops the voltage on all other feeders in the plant. The voltage sag may even show up in the utility system.

 Copyright © 1998 IEEE. All rights reserved.

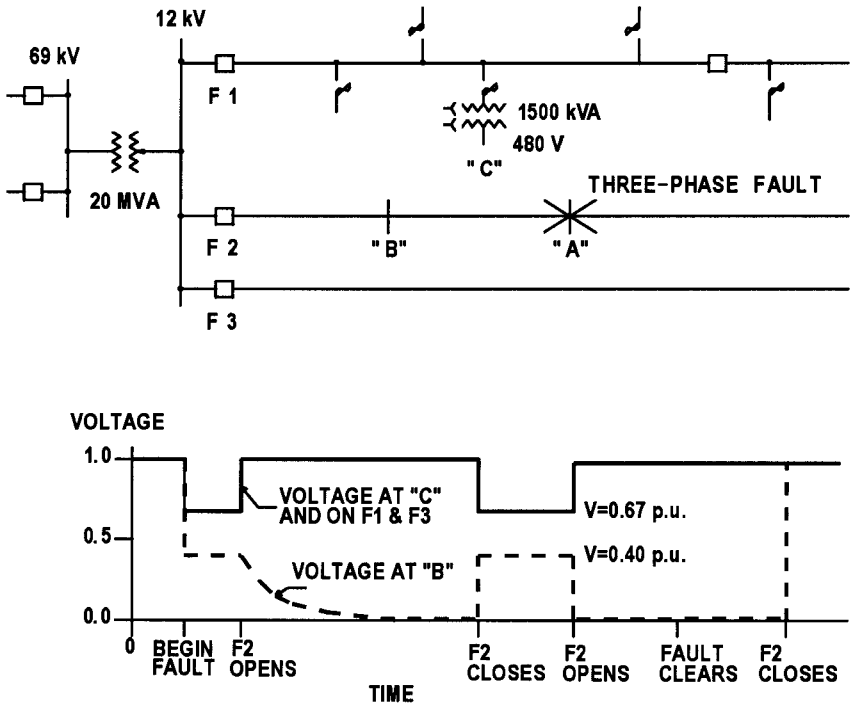


**Figure 9-1—Voltage sags from faults and fault clearing**

The voltage sag magnitude at a specific location depends on system impedance, fault impedance, transformer connections, and the pre-sag voltage level. The impact of the sag depends upon equipment sensitivity.

## 9.4 Voltage sag predictions

Voltage sags associated with fault clearing have many predictable characteristics. It is possible to predict the sag magnitude for individual faults by calculating the voltage drop at the critical load. Predicting how long the voltage sag will last requires an estimate of the total clearing time for the overcurrent protective device. The waveform of voltage sags is somewhat predictable from analysis of recorded voltage sag data available and with the aid of transient network analysis. However, it is very important to estimate how often voltage sags will upset sensitive electrical equipment.

Predicting characteristics for one sag caused by a specific fault at a specific location is straightforward. Prepare an accurate electrical model of the system, apply the fault, and calculate the voltage sag magnitude at the critical load. Use the protective device characteristics

Copyright © 1998 IEEE. All rights reserved.

to estimate sag duration. Compare the sag characteristics with the sensitive equipment capability to determine if the process will have an outage.

Predicting sag characteristics a sensitive load will see during several years of operation requires a probabilistic approach. It is impossible to predict exactly where each fault will occur, but it is reasonable to assume that many faults will occur. The most accurate predictions require sag calculations for every possible fault on the electrical system and estimating each fault's frequency of occurrence. The overall sag frequency is the sum of the individual frequencies. A practical approach is to locate boundaries on the electrical system where specific sag magnitudes are possible; then estimate the fault frequency in the boundary.

### 9.4.1 Magnitude of individual sags

The ability to calculate sag magnitudes for any specific fault is essential to the prediction process. It requires knowledge of network impedances, fault impedance, and fault location relative to the sensitive load. It is also necessary to know the transformer connections and pre-sag voltages. See 9.4.5 and 9.4.6 for more details.

Figure 9-2 shows the basic impedance divider needed to calculate sag magnitude. The equation is

$$V_{sag} = \frac{Z_2 + Z_f}{Z_1 + Z_2 + Z_f} \tag{9-1}$$

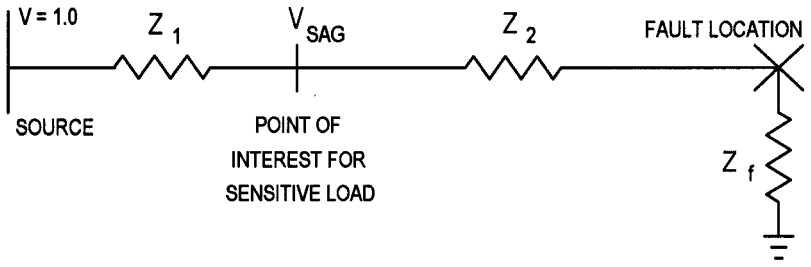


**Figure 9-2—Basic impedance divider for sag magnitude**

Figure 9-3 and Equations (9-2) through (9-4) illustrate sag calculations for a three-phase zero impedance fault ($Z_f = 0$). Figure 9-3 shows the positive sequence reactances of the supply for F2 of Figure 9-1 with a three-phase zero impedance fault at "A." Use of the reactance only simplifies the calculations to demonstrate the concept. In practice, it will be necessary to also consider resistance, sequence components, etc.

Equations (9-2) through (9-4) show impedance divider calculations to predict voltage sag magnitudes. While fault current is flowing from the infinite bus to "A," the voltage at "B" is

 Copyright © 1998 IEEE. All rights reserved.

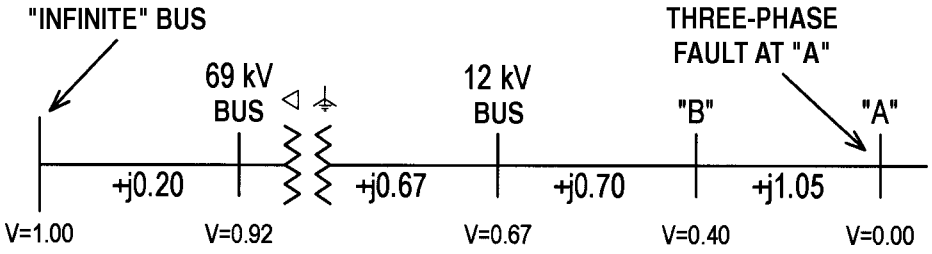


**Figure 9-3—Impedance diagram and voltage sags for Figure 9-1**

$$V_B = \frac{j1.05}{j0.20 + j0.67 + j0.70 + j1.05} = 0.40 \text{ p.u.} \quad (9\text{-}2)$$

The voltage at the 12 kV bus and all loads on F1 and F3 including “C” in Figure 9-1 is

$$V_{12\ kV} = \frac{j0.70 + j1.05}{j0.20 + j0.67 + j0.70 + j1.05} = 0.67 \text{ p.u.} \quad (9\text{-}3)$$

The voltage at the 69 kV bus is

$$V_{69\ kV} = \frac{j0.67 + j(0.70) + j1.05}{j0.20 + j0.67 + j0.70 + j1.05} = 0.92 \text{ p.u.} \quad (9\text{-}4)$$

These simple calculations show how one feeder fault can disrupt an entire electrical neighborhood. The calculations only used reactance to demonstrate the impedance divider principle. Accurate studies may require all impedance information including resistance and reactance of positive, negative, and zero sequence components and the impedance of the fault. However, the concept is identical to the simple three-phase reactance calculations.

The impedance divider concept also applies to the transmission network; however, the calculations are more difficult. This normally requires a computer program for network fault analysis. Network computer models allow the user to predict voltage sag magnitude at the sensitive load for any type of fault anywhere in the network. Figure 9-4 shows a simplified one-line diagram with sag magnitudes on part of a transmission network supplying sensitive loads.

Table 9-1 shows results of computer analysis of a network containing over a thousand buses. It shows the per-unit voltage at remote buses in a large network for faults at one EHV bus. The magnitudes represent output voltages from distribution substations supplied from the transmission system through one delta-wye transformer. Only the lowest phase voltage is listed for the phase-to-phase and phase-to-ground faults. For example, one bus 56 km from the faulted bus will see 0.67 per-unit voltage during a three-phase fault. The lowest phase

Copyright © 1998 IEEE. All rights reserved.

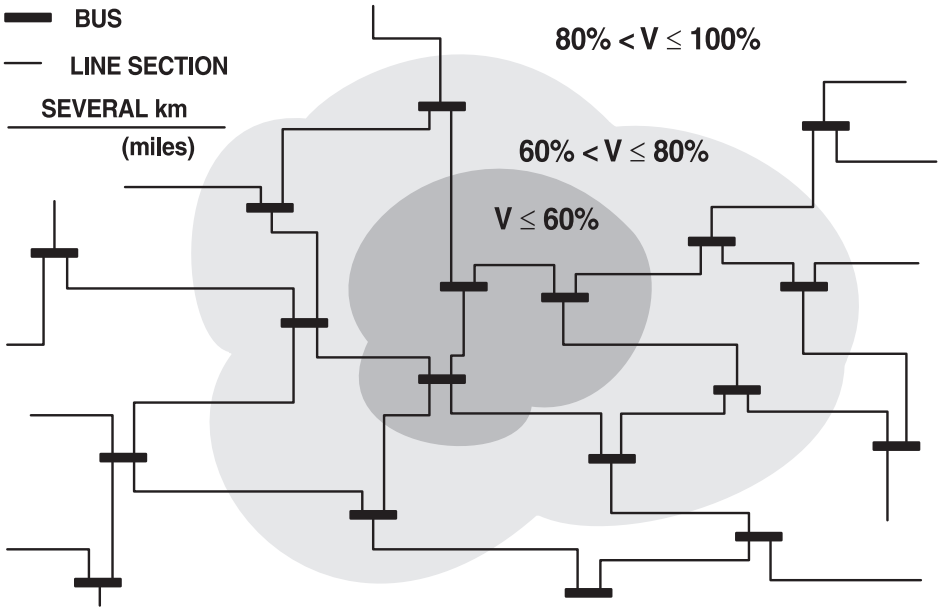


**Figure 9-4—Transmission network voltage sag profile**

voltage on a bus 86 km away will be 0.84 per unit for a phase-to-ground fault on the same EHV bus. (This assumes all prefault voltages are 1.0 per unit.)

**Table 9-1—Network voltage vs. distance from EHV fault**

| Number of kilometers from the fault | Lowest phase voltage for each type of fault | | |
|---|---|---|---|
| | 3 ϕ | ϕ to ϕ | ϕ to ground |
| **0 to 8** | **0 to 0.6** | **0 to 0.7** | **0 to 0.75** |
| 42 | 0.71 | 0.82 | 0.87 |
| 56 | 0.67 | 0.76 | 0.81 |
| 64 | 0.71 | 0.78 | 0.84 |
| 86 | 0.84 | 0.88 | 0.91 |
| 153 | 0.94 | 0.97 | 0.95 |
| 156 | 0.88 | 0.91 | 0.92 |


Copyright © 1998 IEEE. All rights reserved.

Clearly, one high-voltage fault can produce disruptive voltage sags in many cities and over several hundred square kilometers. Also, physical distance does not translate directly to electrical "distance." A bus 42 km from the fault saw a less severe voltage sag than a bus 56 km away.

### 9.4.2 Duration of sags

Each voltage sag lasts as long as the protection equipment allows fault current to flow. There are many types of fault-clearing equipment. Each has an absolute minimum time that it takes to clear faults. In addition, intentional time delay is commonly introduced to provide coordination between devices in series. Furthermore, many line faults are temporary. Automatic reclosing may be used to reenergize the line and restore service within a few seconds, as in the example of Figure 9-1. The clearing times for some commonly used devices are listed in Table 9-2 along with a possible number of retries for automatic reclosing. (See IEEE Power System Relaying Committee Reports [B11], [B12].)

**Table 9-2—Typical clearing times**

| Type of fault-clearing device | Clearing time in cycles | | |
|---|---|---|---|
| | Typical minimum | Typical time delay | Number of retries |
| Expulsion fuse | 0.5 | 0.5 to 60 | None |
| Current-limiting fuse | 0.25 or less | 0.25 to 6 | None |
| Electronic recloser | 3 | 1 to 30 | 0 to 4 |
| Oil circuit breaker | 5 | 1 to 60 | 0 to 4 |
| $SF_6$ or vacuum breaker | 3–5 | 1 to 60 | 0 to 4 |

Figure 9-5 summarizes the sag duration probability distribution for voltage sag data reported in various papers (see Conrad et al., [B5], Dorr [B6], Goldstein and Speranza [B7], and Gulachenski [B9]). Notice that 60–80% of the reported voltage sags lasted less than 2/10 of one second. Also notice the steep rise in the curve just less than 1/10 of one second, which corresponds to minimum clearing time for oil circuit breakers.

### 9.4.3 Frequency—How often sags occur

Predicting the voltage sag frequency, or how often voltage sags may occur, requires an accurate network impedance model and reliability data for all equipment in the electrical "neighborhood." Reliability data for transformers, lines, and other equipment is available in the appendixes of this standard. Appendix N provides data on high-voltage transmission lines.

Copyright © 1998 IEEE. All rights reserved.

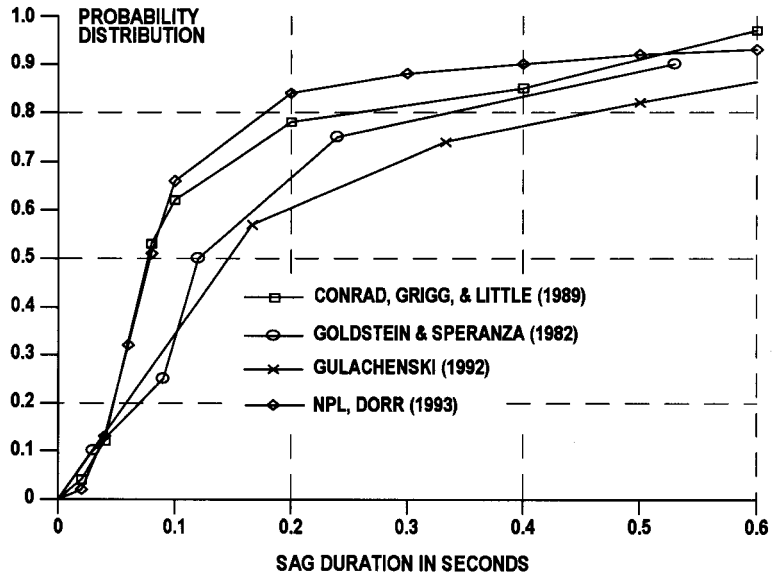


**Figure 9-5—Voltage sag duration probability distribution**

Utility power lines that are many kilometers long and exposed to adverse weather are often a major cause for voltage sags.

The problem is to determine which components in the electrical network cause a “significant” voltage sag when faulted, and then determine the probability that each fault will occur. Lines, feeders, and branch circuits present special problems because the voltage sag magnitude depends upon the fault location. Sags farther away are generally less severe. A complete picture requires calculations for every possible fault and every possible fault impedance. It is often convenient to identify what portions of each line can cause “significant” sags when those portions experience a fault.

For example, refer again to the radial system of Figure 9-1. The sag magnitude for load “C” becomes less severe as fault “A” occurs farther and farther from the 12 kV bus. Assume the source reactance to the 12 kV bus $Z_1$ = 0.87 p.u. and calculate sag voltages for three-phase faults using only reactance values. From Equation (9-1), the voltage will sag to 50% when reactance $Z_2$ = 0.87 p.u. and fault impedance $Z_f$ = 0. If $Z_2$ is a line whose reactance is 0.21 p.u./km then $Z_2$ represents 4.14 km of line. Any zero impedance fault less than 4.14 km from the bus will cause the voltage to drop to 50% of nominal or lower. Likewise, faults anywhere from zero to 16.67 km from the substation can cause sags to 80% or lower.

Now assume the feeder has a uniform fault rate of 0.12 three-phase faults per kilometer per year to calculate the frequency of occurrence. There are 4.14 km of line on F2 that can cause

 Copyright © 1998 IEEE. All rights reserved.

sags to 50% or lower. Therefore, Equation (9-5) shows F2 is likely to cause 0.5 sags per year less than or equal to 50% of pre-sag voltage for the load at "C."

$$\text{Sag}_{50\%} = 0.12 \ \frac{\text{faults}}{\text{km} - \text{year}} \times 4.14 \text{ km} = 0.5 \ \frac{\text{sags}}{\text{year}} \tag{9-5}$$

Likewise, Equation (9-6) shows F2 is expected to cause 2.0 sags per year with magnitude from 0% to 80% for load "C."

$$\text{Sag}_{80\%} = 0.12 \ \frac{\text{faults}}{\text{km} - \text{year}} \times 16.67 \text{ km} = 2.0 \ \frac{\text{sags}}{\text{year}} \tag{9-6}$$

Notice that F3 will also cause voltage sags for the critical load. Repeat the calculations for each component on F3 that can cause significant voltage sags. Add the expected numbers for each component for the total frequency prediction. If F3 is identical to F2, "C" can expect 1.0 sag per year from 0% to 50% of nominal and 4.0 sags per year from 0% to 80% of nominal from F2 and F3. Repeating these calculations for all components where faults will cause "significant" voltage sags gives users a clear idea of what might be called the area of vulnerability. These areas may be highlighted on schematics or maps like Figure 9-4 to clearly identify the area.

One good way to display voltage sag frequency is to plot the number of events vs. sag voltage in percent of nominal as shown in Figure 9-6. The graph shows how many nuisance shutdowns are expected as a function of voltage sensitivity. Select several different voltage sag magnitudes, perform network analysis, and accumulate the number of sags that will be worse than or equal to each voltage threshold. Plot points for number of events vs. voltage and draw the curve.

The most severe sags occur infrequently because a relatively small amount of line exposure can produce severe sags (see Figure 9-4). However, several hundred kilometers of line and many components might cause voltage sags to 90% of nominal. Therefore minor (shallow) sags, such as sags to 90%, occur much more frequently. It is common for minor sags to occur five to ten times more often than severe (deep) sags.

Experience shows that sag frequency vs. magnitude curves have the same general shape. Figure 9-6 summarizes predictions and measured data from various sites. The actual number of events is different at each site, so Figure 9-6 is normalized for 1.0 event per year at 80% of nominal voltage. This curve is very useful to estimate the impact of equipment undervoltage trip settings. The dashed lines compare 70% and 90% trip settings to the normalized 80% trip setting. Sag-related outages for 70% trip settings are about 0.46 times less likely, while 90% trip settings are 3.1 times more likely to cause sag outages. Therefore, a trip setting at 90% of nominal would be 3.1 divided by 0.46, or 6.7 times more likely to cause nuisance tripouts than the 70% trip setting.

Copyright © 1998 IEEE. All rights reserved.

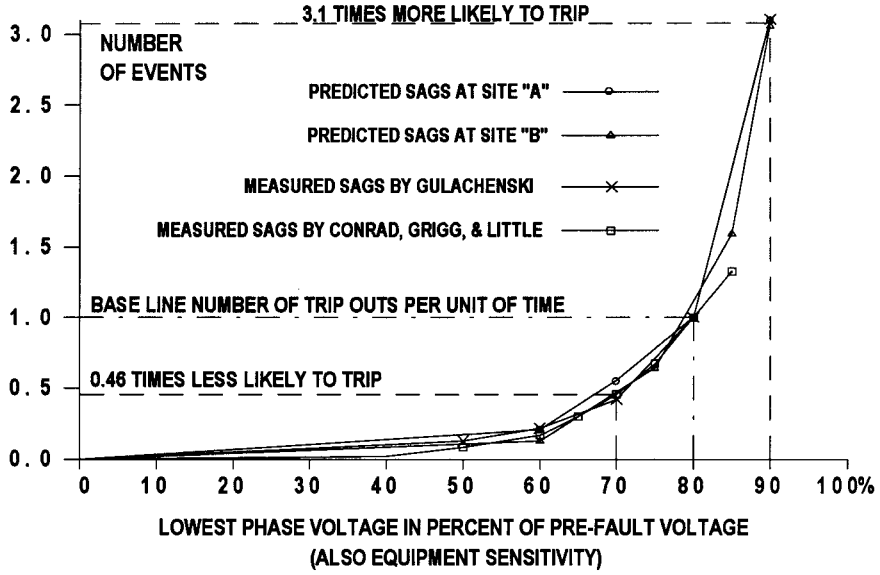


**Figure 9-6—Sag magnitude relative number of events**

### 9.4.4 Waveform

Most sags due to fault clearing have very similar characteristics. Faults usually begin when the half-cycle voltage is something greater than zero because arcing begins prior to physical contact. This creates a fast transition to the lower voltage and some asymmetry. The voltage sag ends when the fault-clearing device interrupts fault current. This usually occurs near a forced current zero. Therefore, the voltage sag ends with a quick transition from the reduced magnitude to the normal magnitude sine wave. Figure 9-7 shows a typical sag with 86% magnitude and 0.09 s duration. Although not shown, the sag magnitude was different on each of the other two phases.

### 9.4.5 Effect of transformer connections

Three-phase transformer stations connected delta-wye or wye-delta will alter unbalanced voltage sags. Roughly, a phase-to-ground voltage sag turns into a phase-to-phase sag, less the zero sequence component, as it passes through any delta-wye transformer. Passing that sag through another delta-wye transformer returns something like the original phase-to-ground voltage sag less the zero sequence component.

Table 9-3 shows one example of the effect transformer connections have on a sag caused by a phase-to-ground fault. The fault is on the solidly grounded wye-wye system that supplies the first delta-wye transformer. The first delta-wye transformer then supplies the second delta-

 Copyright © 1998 IEEE. All rights reserved.

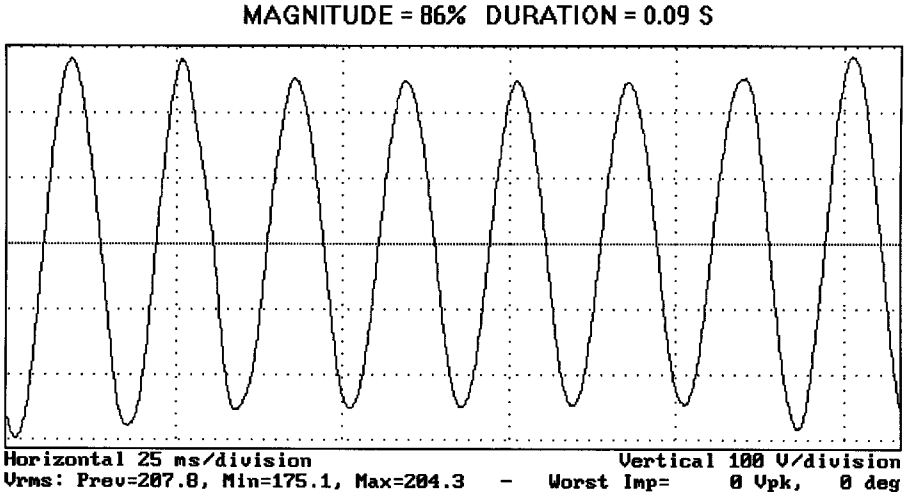


**Figure 9-7—Typical sag waveform**

wye transformer. Notice the A phase-to-ground sag magnitude on the wye-wye system is more severe because zero sequence voltages are present only on the wye-wye side.

**Table 9-3—Impact of transformer connections**

| Type of transformer connection | Phase-to-ground voltage in per unit of phase-to-ground | | | Phase-to-phase voltage in per unit of phase-to-phase | | |
|---|---|---|---|---|---|---|
| | A | B | C | A-B | B-C | C-A |
| Grounded wye-wye | 0.644 | 0.986 | 0.988 | 0.796 | 1.000 | 0.835 |
| First delta-wye | 0.835 | 0.796 | 1.000 | 0.745 | 0.926 | 0.959 |
| Second delta-wye | 0.959 | 0.745 | 0.926 | 0.835 | 0.796 | 1.000 |

This shows the importance of including the effects of transformers in the calculations. It also offers one small opportunity for controlling the effect of voltage sags. If a particular piece of equipment is known to be sensitive only to phase-to-phase voltage sags, and the sags are known to primarily be caused by one type of fault, a particular transformer connection may help to reduce the problems. A more detailed discussion of the effect of transformer connections is provided in (Melhorn et al., [B16]).

Copyright © 1998 IEEE. All rights reserved.

### 9.4.6 Effect of pre-fault voltage

All of the voltage sag magnitude calculations in this chapter assume the pre-fault or pre-sag voltage is 100% of nominal. The calculations give sag voltages that are actually in percent of the pre-sag voltage. Therefore, compensation is required if the actual pre-sag voltage is higher or lower than nominal. This is important for sensitive equipment. Pre-sag voltages different from the assumed 100% can cause significant errors in predicting the number of nuisance trips.

For example, consider sag outage predictions for equipment sensitive to 80% sags. A calculated 82% sag with 95% pre-sag voltage actually produces 78% voltage. The equipment may trip even though predictions assuming 100% pre-sag voltage say it would not. A calculated 77% sag might not trip the equipment if the pre-sag voltage is 105%.

Operating below nominal voltage increases apparent sensitivity and increases the number of nuisance sag outages. Operating above nominal before the sag decreases the apparent sensitivity and reduces the number of sag outage problems. The slope of Figure 9-6 for an 80% trip setting is such that a 1% change in pre-sag voltage changes the predicted number of sag tripouts by 10–15%.

### 9.4.7 Effect of fault impedance

Fault impedance is very important to sag magnitude calculations, especially on lower voltage systems. Recalling Equation (9-1), the sag magnitude is

$$V_{\text{point of interest}} = \frac{Z_2 + Z_f}{Z_1 + Z_2 + Z_f} \tag{9-7}$$

where

$Z_f$ is the fault impedance.

The additional fault impedance generally makes sags less severe than zero impedance faults. For example, consider the system in Figure 9-8. It consists of two feeders where faults can cause sags for the sensitive load on the third feeder. The impedance of each feeder section and number of faults per year are shown next to each section.

Table 9-4 summarizes calculations using three different fault impedances for the system in Figure 9-8. It shows sag events per year for phase-to-phase faults selecting the lowest magnitude of the three-phase voltages. The calculations used macros in a computer fault analysis package that divided each line into ten equal segments. Table 9-4 shows the number of sags for zero impedance, 1 Ω resistance, and 5 Ω resistance faults. Notice that the 5 Ω resistance causes no voltage sags deeper than 80% of nominal anywhere on the system. The fault impedance values are only used for this example and are not considered typical.

 Copyright © 1998 IEEE. All rights reserved.

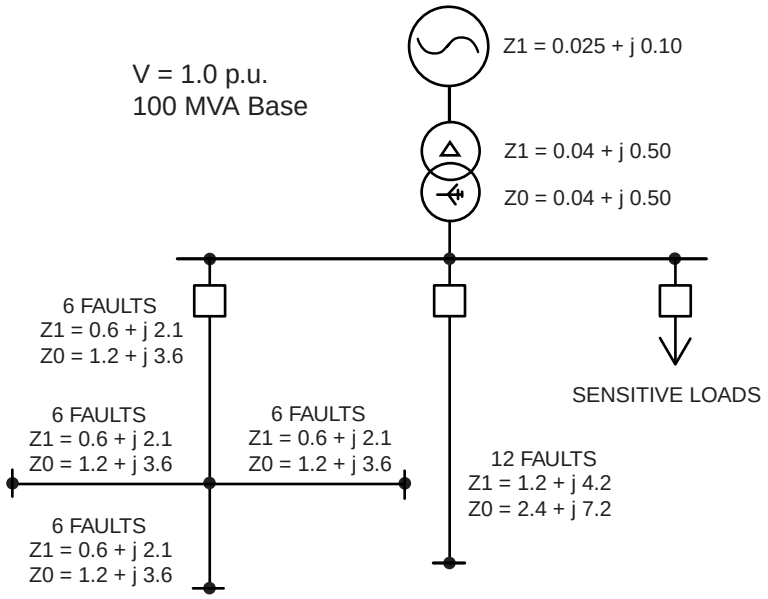


**Figure 9-8—Diagram of radial system for effect of fault impedance**

**Table 9-4—Effect of fault impedance on sag voltage for phase to phase faults**

| Lowest phase sag voltage | Fault impedance | | |
|---|---|---|---|
| | **0 Ω** | **1 Ω** | **5 Ω** |
| 60% | 1.68 | 1.05 | zero |
| 70% | 2.52 | 2.31 | zero |
| 75% | 3.36 | 3.15 | zero |
| 80% | 4.83 | 4.20 | zero |
| 85% | 8.61 | 8.19 | 0.21 |
| 90% | 12.6 | 12.6 | 10.9 |

## 9.5 Examples for rectangular sag calculations

The following examples show sample calculations to predict voltage sag performance. The first example is simplified to use only three-phase short circuits with zero fault impedance on a radial system. The second example demonstrates a more complete symmetrical component fault analysis on a larger network assuming zero impedance faults. Users are cautioned that

Copyright © 1998 IEEE. All rights reserved.

the best predictions require accurate models including fault type, fault impedance, transformer connections, network impedance models, and knowledge of pre-sag voltages.

### 9.5.1 Radial distribution example

Consider the simple two-feeder system in Figure 9-9. A load on F1 is sensitive to voltage sags and needs to know how many sags to expect from F2. The customer with sensitive loads will consider purchasing ride-through capability, but sag magnitude information is needed. For this example, consider all faults to be bolted three-phase only. Also assume pre-fault voltages are 1.0 per unit.

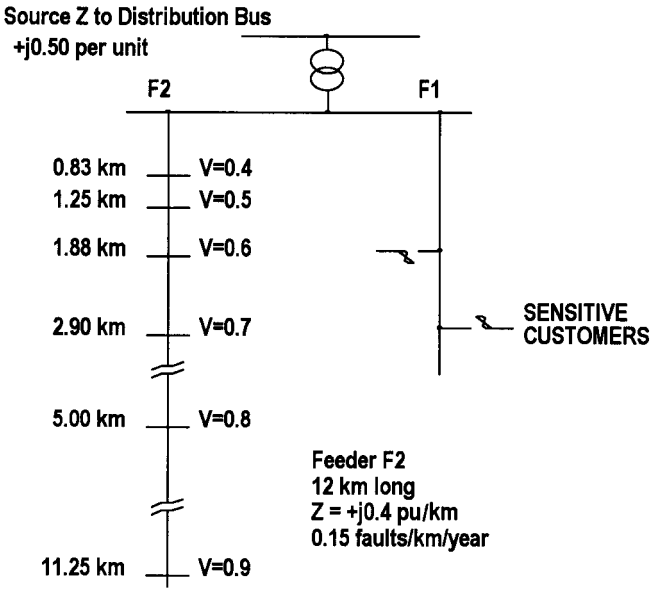


**Figure 9-9—Radial distribution example one-line diagram**

The source reactance to the feeder bus is +j0.50 p.u. F2 is 12 km long with a reactance of 0 + j0.4 p.u. per kilometer. The frequency for three-phase faults is 0.15/km/year.

The first step is to calculate the points where faults can cause voltage sags of various magnitudes. Figure 9-9 shows locations on F2 where three-phase faults will reduce the feeder bus voltage to drop 0.4 to 0.9 per unit of pre-sag voltage in 0.1 per-unit increments. The voltage and distance from the distribution bus are noted on F2 in Figure 9-9.

Any fault closer to the feeder bus can cause voltage sags worse than those at the point of interest. For example, three-phase faults between the bus and 5 km out will cause a sag at

 Copyright © 1998 IEEE. All rights reserved.

least to 0.8 per unit. Faults farther than 5 km away cannot possibly drop the voltage lower than 0.8 per unit.

Table 9-5 summarizes the distances and number of events for the voltage sag magnitudes of interest. The right-hand column is the number of voltage sags that will be worse than or equal to the voltage listed in column 1.

**Table 9-5—Radial distribution example sag calculations**

| Lowest phase sag voltage per unit | Kilometer of line exposure | Events per kilometer per year | Number of sags less than or equal to sag voltage |
|---|---|---|---|
| 0.40 | 0.83 | 0.15 | 0.12 |
| 0.50 | 1.25 | 0.15 | 0.19 |
| 0.60 | 1.88 | 0.15 | 0.28 |
| 0.70 | 2.90 | 0.15 | 0.44 |
| 0.80 | 5.00 | 0.15 | 0.75 |
| 0.90 | 11.25 | 0.15 | 1.69 |

Figure 9-10 shows a graph of the sag frequency vs. magnitude from Table 9-5. Notice how the number of events increases dramatically with increased sensitivity. This is the same curve shape as data presented in Figure 9-6. Addition of another feeder identical to F2 doubles the probability of voltage sags. The complete picture must also include the number of voltage sags from the plant distribution system and the transmission network.

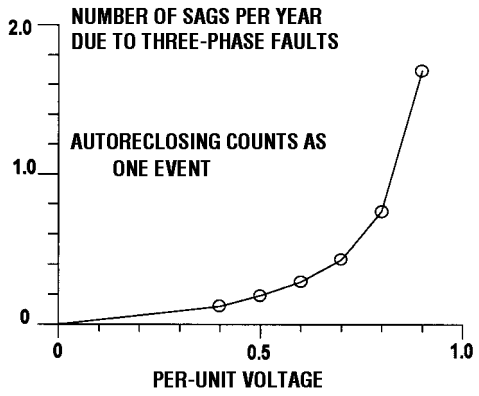


**Figure 9-10—Number of sags from radial distribution example**

Copyright © 1998 IEEE. All rights reserved.

### 9.5.2 Transmission network example

Tables 9-6 through 9-9 summarize the results of a detailed prediction of sag magnitudes from a large transmission network. A network fault analysis program calculated voltage at the sensitive load for three-phase, single-line to ground, line-to-line, and double-line-to-ground faults. All faults were assumed to have zero impedance. The voltage ranges at the sensitive load site are 0.0 to 0.60, 0.60 to 0.75, 0.75 to 0.85 and 0.85–0.90 per unit of the pre-sag voltage. The fault analysis applied faults at all buses and many points along each line to identify what parts of the system can cause sags in the ranges of interest.

**Table 9-6—Sag events from the 345 kV system**

| Type of fault | Events per km per year | Voltage sag events in each voltage range (lowest sag magnitude of three phases) | | | | | | | |
|---|---|---|---|---|---|---|---|---|---|
| | | 0–0.60 | | 0.60–0.75 | | 0.75–0.85 | | 0.85–0.90 | |
| | | km | Events | km | Events | km | Events | km | Events |
| Phase-to-ground | 0.0209 | 0 | 0.00 | 0 | 0.00 | 16 | 0.33 | 53 | 1.11 |
| Two-phase-to-ground | 0.0016 | 0 | 0.00 | 0 | 0.00 | 66 | 0.11 | 192 | 0.31 |
| Phase-to-phase | 0.0002 | 0 | 0.00 | 0 | 0.00 | 64 | 0.01 | 187 | 0.04 |
| Three-phase | 0.0002 | 0 | 0.00 | 23 | 0.00 | 151 | 0.03 | 153 | 0.03 |
| Total | 0.0229 | 0 | **0.00** | 23 | **0.00** | 298 | **0.48** | 584 | **1.49** |

**Table 9-7—Sag events from the 230 kV system**

| Type of fault | Events per km per year | Voltage sag events in each voltage range (lowest sag magnitude of three phases) | | | | | | | |
|---|---|---|---|---|---|---|---|---|---|
| | | 0–0.60 | | 0.60–0.75 | | 0.75–0.85 | | 0.85–0.90 | |
| | | km | Events | km | Events | km | Events | km | Events |
| Phase-to-ground | 0.0132 | 0 | 0.00 | 0 | 0.00 | 0 | 0.00 | 0 | 0.00 |
| Two-phase-to-ground | 0.0026 | 0 | 0.00 | 0 | 0.00 | 0 | 0.00 | 0 | 0.00 |
| Phase-to-phase | 0.0002 | 0 | 0.00 | 0 | 0.00 | 0 | 0.00 | 0 | 0.00 |
| Three-phase | 0.0002 | 0 | 0.00 | 0 | 0.00 | 0 | 0.00 | 55 | 0.01 |
| Total | 0.0167 | 0 | **0.00** | 0 | **0.00** | 0 | **0.00** | 55 | **0.01** |

The limits of vulnerability for each component and line were highlighted on a map similar to Fig. 9-4. Line exposure distances were estimated for each of the four sag categories for each of the four types of fault for each of the four system voltages. Table 9-6 summarizes this work

 Copyright © 1998 IEEE. All rights reserved.

**Table 9-8—Sag events from the 138 kV system**

| Type of fault | Events per km per year | Voltage sag events in each voltage range (lowest sag magnitude of three phases) | | | | | | | |
|---|---|---|---|---|---|---|---|---|---|
| | | 0–0.60 | | 0.60–0.75 | | 0.75–0.85 | | 0.85–0.90 | |
| | | km | Events | km | Events | km | Events | km | Events |
| Phase-to-ground | 0.0217 | 0 | 0.00 | 60 | 1.30 | 71 | 1.54 | 77 | 1.67 |
| Two-phase-to-ground | 0.0051 | 10 | 0.05 | 109 | 0.56 | 105 | 0.53 | 77 | 0.39 |
| Phase-to-phase | 0.0018 | 10 | 0.02 | 87 | 0.17 | 98 | 0.18 | 69 | 0.12 |
| Three-phase | 0.0012 | 71 | 0.09 | 82 | 0.10 | 101 | 0.12 | 98 | 0.12 |
| Total | 0.0298 | 91 | **0.16** | 348 | **2.13** | 375 | **2.38** | 321 | **2.30** |

**Table 9-9—Sag events from the 69 kV system**

| Type of fault | Events per km per year | Voltage sag events in each voltage range (lowest sag magnitude of three phases) | | | | | | | |
|---|---|---|---|---|---|---|---|---|---|
| | | 0–0.60 | | 0.60–0.75 | | 0.75–0.85 | | 0.85–0.90 | |
| | | km | Events | km | Events | km | Events | km | Events |
| Phase-to-ground | 0.0400 | 6 | 0.24 | 18 | 0.72 | 32 | 1.28 | 68 | 2.72 |
| Two-phase-to-ground | 0.0135 | 24 | 0.32 | 47 | 0.63 | 132 | 1.78 | 220 | 2.97 |
| Phase-to-phase | 0.0043 | 24 | 0.10 | 39 | 0.17 | 130 | 0.56 | 203 | 0.87 |
| Three-phase | 0.0037 | 37 | 0.14 | 69 | 0.26 | 169 | 0.63 | 191 | 0.71 |
| Total | 0.0615 | 91 | **0.80** | 173 | **1.78** | 463 | **4.25** | 692 | **7.27** |

for the 345 kV lines. Table 9-7 is the same summary for 230 kV, etc. Each table multiplies the kilometers of exposure by the failure rate for each fault type. Totals for sag events in each sag voltage range are highlighted in boldface on the bottom row of each table.

Table 9-10 summarizes the voltage sag contributions from each voltage system for each of the four sag magnitude ranges. These are the same contributions from Tables 9-6 through Table 9-9. Row totals in Table 9-10 give the total number of sag events per year for each sag magnitude range.

Table 9-11 and Figure 9-11 are the final products of the magnitude prediction effort. They compare the number of nuisance sag outages for various equipment sensitivity levels. The predictions assume the pre-sag voltage is exactly the equipment nominal voltage and must be modified if the pre-sag voltage is different.

Copyright © 1998 IEEE. All rights reserved.

**Table 9-10—Summary of contributions from each system**

| Lowest phase per unit-voltage range | Contribution by line voltage (number of events per year) | | | | Totals |
|---|---|---|---|---|---|
| | 345 kV | 230 kV | 138 kV | 69 kV | |
| 0–0.60 | 0.00 | 0.00 | 0.16 | 0.80 | 0.97 |
| 0.60–0.75 | 0.00 | 0.00 | 2.13 | 1.78 | 3.89 |
| 0.75–0.85 | 0.48 | 0.00 | 2.38 | 4.25 | 7.12 |
| 0.85–0.90 | 1.49 | 0.01 | 2.30 | 7.27 | 11.09 |

**Table 9-11—Example number of sag problems depending on equipment sensitivity**

| Under-voltage threshold per unit | Voltage sags causing tripouts in each range | | | | Nuisance tripouts per year |
|---|---|---|---|---|---|
| | 0–0.60 | 0.60–0.75 | 0.75–0.85 | 0.85–0.90 | |
| 0.60 | 0.97 | No trip | No trip | No trip | 0.97 |
| 0.75 | 0.97 | 3.89 | No trip | No trip | 04.86 |
| 0.85 | 0.97 | 3.89 | 7.12 | No trip | 11.98 |
| 0.90 | 0.97 | 3.89 | 7.12 | 11.09 | 23.07 |

This particular study was recalculated for a different configuration to compare sag performance of alternative supplies. This allowed designers to compare the cost of the alternative supply configuration to the value of fewer sag problems. It also allowed plant designers to reasonably estimate the value of improving equipment immunity to sags.

## 9.6 Nonrectangular sags

Previous parts of this chapter assume the rms sag magnitude vs. time is rectangular. This is not true when a large part of the load consists of rotating machines such as induction motors, synchronous motors, and generators. Examples are chemical plants and residential areas with mainly air conditioner load. The induction motors will somewhat moderate the voltage sag as they contribute current to the short circuit.


Copyright © 1998 IEEE. All rights reserved.

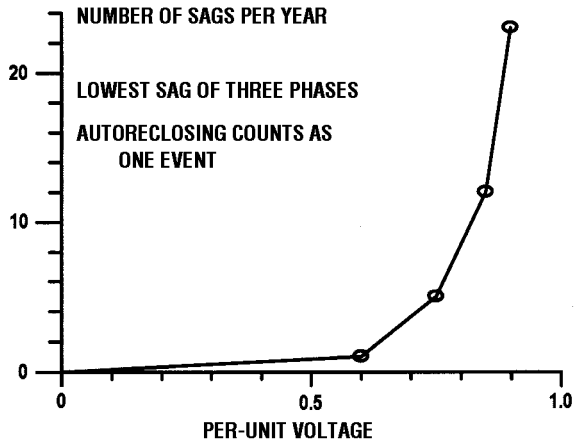


**Figure 9-11—Number of sags from transmission network example**

### 9.6.1 Induction motor influence on sag shape

Motors will slow down during a sag and reaccelerate when the system fault clears. The re-acceleration may cause an extended post-fault sag if the motor load is large with respect to the system impedance. The post-fault sag can last up to several seconds and the voltage will be between 60% and 90%. Severe post-fault voltage sags can cause tripping of equipment that survived during the fault portion of the sag. This subclause concentrates on induction motors, as they form the bulk of the motor load. Synchronous motors show behavior which can be incorporated in a voltage sag study in a similar way. Power electronics controlled motor drives may show a very different behavior.

Figures 9-12 and 9-13 show the voltage during and after a short circuit close to the point of common coupling. Figure 9-12 gives the time-domain voltages calculated by using Electro Magnetic Transients Program (EMTP, which employs the full Park's equations for the induction machine). Figure 9-13 gives the amplitude of the voltage phasor, as calculated by a transient stability program (which employs a simplified induction motor model). What basically happens is that the induction motors slow down during the fault (the contribution of them to the fault current leads to the nonzero during-fault voltage) and reaccelerate after the fault has been cleared. The latter demands a high current, which causes the post-fault sag (see Bollen [B3]).

Figure 9-14 shows a measured voltage sag with a considerable post-fault component (see Melhorn et al., [B16]). The resemblance to Figures 9-12 and 9-13 suggests that there was a large induction motor load somewhere near the fault position.

Copyright © 1998 IEEE. All rights reserved.

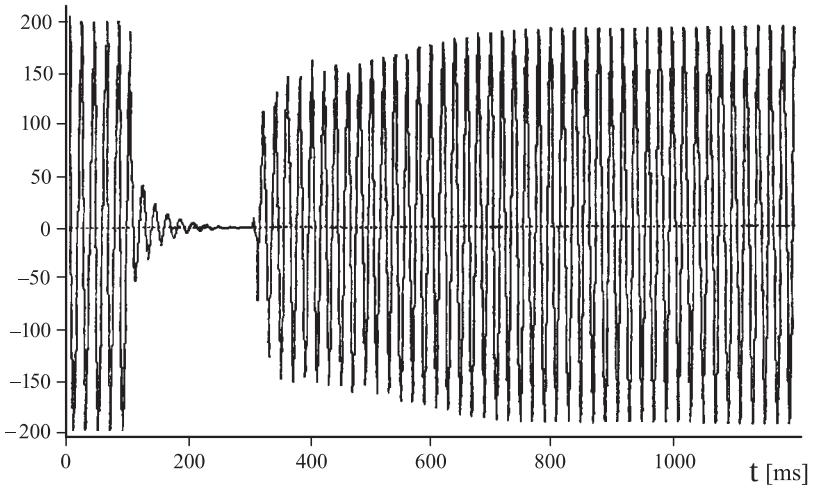


**Figure 9-12—EMTP Model of induction motor influence on a sag waveform**

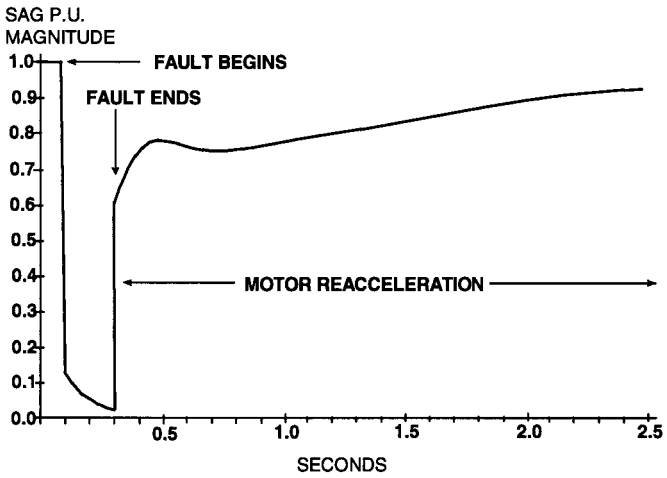


**Figure 9-13—Rms plot of EMTP model of induction motor influence on a sag waveform**

### 9.6.2 Stochastic assessment

In case the induction motor load significantly influences the shape of the voltage sag, more complicated calculations are needed than provided in 9.4. The type of induction motor model

 Copyright © 1998 IEEE. All rights reserved.

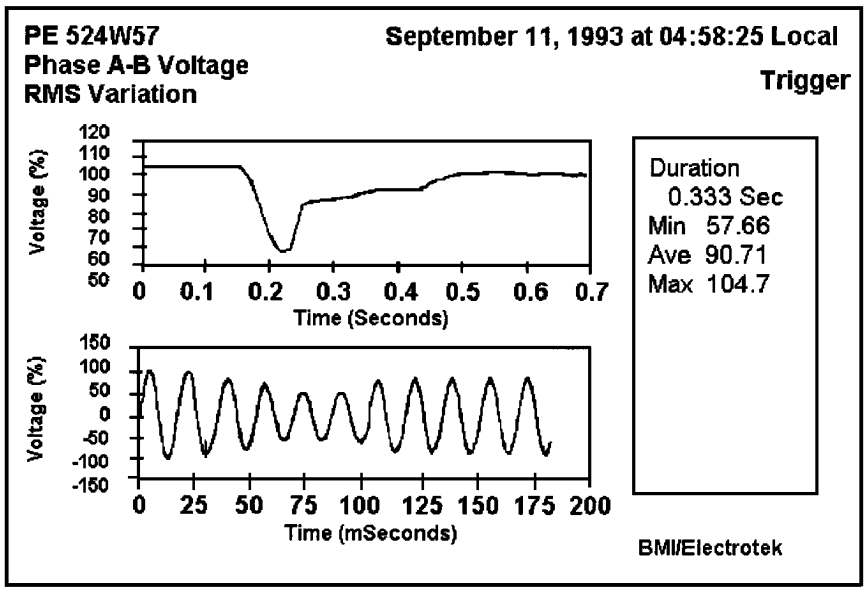


**Figure 9-14—Typical waveform and rms plot showing motor influence**

has to be used depends on the accuracy required and the availability of software. In the forthcoming example, a transient stability program is used to calculate the shape of individual voltage sags.

As in 9.4.3, one has to select the fault positions that are expected to cause a significant voltage sag. Apart from the selection criteria mentioned before, the following can be used:

— The post-fault voltage sag is more severe if the fault is near a concentration of induction motor load.
— The post-fault voltage sag is more severe if part of the supply to the sensitive load is removed by the protection without removing any induction motor load.
— The post-fault voltage sag is more severe for induction motor load with small slip and with very low or very large inertia constants.
— The post-fault voltage sag is more severe for longer fault-clearing time.

It is, in theory, still possible to calculate a “duration” and a “depth” for a nonrectangular sag, e.g., by taking the time below 90% voltage and the average depth. An alternative presented here is to assume the equipment sensitivity to be rectangular and to determine the expected number of sags per year that cause the equipment to trip, for various equipment sensitivities. The result is shown in Table 9-12.

The voltage sag shape has been calculated for about 40 fault positions in the distribution system to a large chemical complex. The load consists mainly of induction motors. A transient

Copyright © 1998 IEEE. All rights reserved.

**Table 9-12—Expected number of sags including effect of motors**

| Magnitude | Duration | | | | |
|---|---|---|---|---|---|
| | 250 ms | 500 ms | 750 ms | 1000 ms | 1250 ms |
| 90% | 0.506 | 0.444 | 0.168 | 0.044 | 0.024 |
| 85% | 0.461 | 0.438 | 0.046 | 0.024 | 0.024 |
| 80% | 0.446 | 0.168 | 0.026 | 0.024 | 0.004 |
| 75% | 0.174 | 0.024 | 0.024 | 0.004 | 0.004 |
| 70% | 0.032 | 0.004 | 0.004 | 0.004 | — |

stability program has been used to calculate the shape of the voltage sags, like in Figure 9-13. Table 9-12 shows that 0.168 times per year (i.e., once every six years), a situation occurs where the plant voltage is below 80% for more than 500 ms. So if the equipment in the plant can withstand an 80% voltage for up to 500 ms, an interruption of plant operation is expected to occur once every six years.

### 9.6.3 Other types of load

The discussion above concentrated on induction motor load. Other loads can be incorporated in the study in a similar way. The model that has to be used depends on the type of load.

All motor load (induction, synchronous, or fed through a power electronics drive) will suffer from loss of kinetic energy during a voltage sag (i.e., the motor will slow down). After the fault this lost energy will have to be recovered, which in almost all circumstances will lead to a post-fault voltage sag. Modern power-electronics drives with unity power factor will mitigate the effect, as will load shedding (either intentional or because of the erroneous tripping of equipment due to the sag). If a large fraction of motors is equipped with contactors that trip during the fault and come back all at the same time, the post-fault sag is simply postponed. If the contactors come back with different delay times, the post-fault sag will be considerably more shallow.

Nonmotor equipment might also cause a post-fault sag. Virtually all equipment shows capacitive behavior on a short time-scale. Often there is even a physical capacitor present. As more and more equipment has large capacitors to ride through the sag, the post-fault sag will become more severe.

A problem with taking the post-fault sag into account is that the load composition is often not known. This holds especially for public supply systems. In that case some assessment has to be made, or a number of studies with different load compositions have to be done. From the different results some kind of “average result” has to be obtained.

 Copyright © 1998 IEEE. All rights reserved.

## 9.7 Development of voltage sag coordination charts

Sag coordination charts show electric supply sag characteristics and utilization equipment response to voltage sags on a single graphical display. The foundation for the display is an XY grid of sag magnitude on the vertical axis and sag duration on the horizontal axis. In the method proposed here, a family of contour lines shows the electric supply sag characteristics. Each contour line represents a number of sags per year.

An equipment line on the same chart shows the equipment voltage tolerance. Proper use of the sag coordination chart enables the estimation of the number of utilization equipment disruptions per unit of time due to voltage sags.

Two data sets are critical for the coordination effort. First, the electric supply sag characteristics must either be known from monitoring data, or predicted. Second, utilization equipment response to sags must be known either from manufacturer specifications or from performance test data. Both supply characteristics and equipment response data sets are required to perform this coordination effort.

### 9.7.1 Electric supply sag characteristics display

The display of supply characteristics requires either historical or predicted sag magnitudes and durations. This data fills magnitude and duration bins in a computer spreadsheet for graphical presentation as contour lines. A very simple example will show fundamental concepts. Later, measured data from the EPRI DPQ project will be used for a typical performance chart (see Wagner et al., [B18]).

Table 9-13 shows a grid of nine sag magnitude ranges in rows, and five sag duration ranges in columns. The combination of nine rows and five columns produce a total of 45 magnitude/duration bins. Every measured or predicted sag will have a magnitude and duration that fits into only one of the 45 bins. The number of bins may vary depending on coordination needs for a particular case. However, this selection of 45 bins is reasonably convenient.

For a simple example, assume each of the 45 bins has one sag per year. Table 9-13 shows the one sag per per year in each of the 45 bins. This means there are 45 sags per year and the characteristics of each sag fits in a unique bin. The 15 bins in the lower right corner are shaded to promote understanding as this example continues.

Table 9-14 shows the cumulative number of sag events that are worse than or equal to each bin from Table 9-13. “Worse than” means the magnitude is lower and the duration is longer. The row and column headings only show single values instead of ranges. For example, there are 15 sags in the 50% magnitude, 0.4 s entry of Table 9-14. The shaded number 15 in Table 9-14 is the sum of all 15 individual shaded entries in Table 9-13. This means 15 sags will have a magnitude of less than or equal to 50% and a duration longer than 0.4 s.

The next step converts Table 9-14 to a set of contour lines similar to elevation contour lines on a geographic map. Figure 9-15 is the contour plot of Table 9-14 generated by a computer

Copyright © 1998 IEEE. All rights reserved.

**Table 9-13—Count of events in each bin**

| Magnitude bin | Time bin (in seconds) | | | | |
|---|---|---|---|---|---|
| | 0.0 < 0.2 | 0.2 < 0.4 | 0.4 < 0.6 | 0.6 < 0.8 | ≥ 0.8 |
| <80–90% | 1 | 1 | 1 | 1 | 1 |
| <70–80% | 1 | 1 | 1 | 1 | 1 |
| <60–70% | 1 | 1 | 1 | 1 | 1 |
| <50–60% | 1 | 1 | 1 | 1 | 1 |
| <40–50% | 1 | 1 | 1 | 1 | 1 |
| <30–40% | 1 | 1 | 1 | 1 | 1 |
| <20–30% | 1 | 1 | 1 | 1 | 1 |
| <10–20% | 1 | 1 | 1 | 1 | 1 |
| 0–10% | 1 | 1 | 1 | 1 | 1 |

**Table 9-14—Sum of events worse than or equal to each magnitude and duration**

| Magnitude | Time (in seconds) | | | | |
|---|---|---|---|---|---|
| | 0.0 | 0.2 | 0.4 | 0.6 | 0.8 |
| 90% | 45 | 36 | 27 | 18 | 9 |
| 80% | 40 | 32 | 24 | 16 | 8 |
| 70% | 35 | 28 | 21 | 14 | 7 |
| 60% | 30 | 24 | 18 | 12 | 6 |
| 50% | 25 | 20 | 15 | 10 | 5 |
| 40% | 20 | 16 | 12 | 8 | 4 |
| 30% | 15 | 12 | 9 | 6 | 3 |
| 20% | 10 | 8 | 6 | 4 | 2 |
| 10% | 5 | 4 | 3 | 2 | 1 |

spreadsheet and graphics program. The lines from lower left to upper right represent the number of sag events per year. Each contour line has a label for the number of events.


Copyright © 1998 IEEE. All rights reserved.

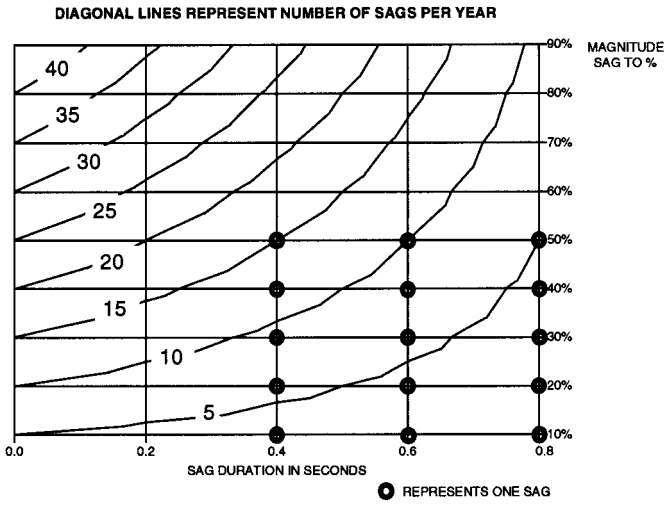


**Figure 9-15—Supply sag performance contours and partial mapping of individual points**

Continuing the simple example, the 15-event contour line intersects the 0.4 s axis at the 50% magnitude axis. This means 15 sags will have a 0.4 s or longer duration and have a 50% or lower magnitude. The dots on the lower right corner of Figure 9-15 show each of the 15 individual sags. Each dot represents the one sag event in each bin of Table 9-13 for this example. There are 15 dots in the rectangular area below and right of the contour line. Similarly, the 20 sag contour shows 20 sags worse than or equal to 0.2 s and 50% magnitude. Normally, the dots will not appear on sag coordination charts. Also, the actual sags will be somewhere in the stated range and not directly on the axis.

Linear interpolation between contour lines and axis works reasonably well, especially in this case, where the sags are distributed uniformly. For example, about 32 sags will be worse than or equal to 0.2 s and 80% magnitude on Figure 9-15. Also, 25 sags will be worse than about 0.28 s and 70% magnitude on Figure 9-15.

### 9.7.2 Adding rectangular equipment sensitivity

The equipment sensitivity curve (or voltage tolerance curve) describes the equipment sensitivity to voltage sags. This curve gives the minimum magnitude that the equipment can withstand for a given sag duration. This curve can be obtained from the equipment manufacturer, from equipment testing, from equipment simulation, or, in future, possibly from standards with typical equipment voltage tolerance. Several publications show measured voltage tolerance curves. It appears that a rectangular curve is very common. The sag contour line method works very easily with these rectangular sensitivity curves. Figure 9-16 overlays the utilization equipment sensitivity on the sag contour lines. The sensitivity curve is typically rectangular or may be approximated with several rectangles. The shaded region shows the

Copyright © 1998 IEEE. All rights reserved.

magnitudes and durations of sags that will cause disruption. The intersection of the rectangular sensitivity knee and the contour line gives the number of disruption events from sags. Continuing the simple example in Figure 9-16, the knee of the sensitivity intersects the 15 sag contour line. This means there will be 15 process disruptions per year.

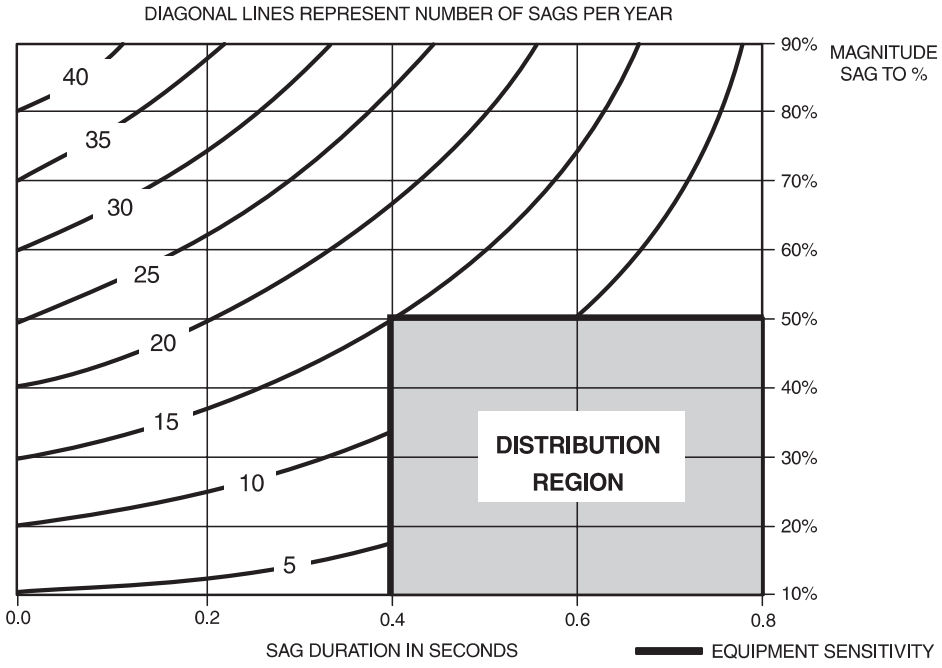


**Figure 9-16—Supply sag performance contours and equipment sensitivity**

### 9.7.3 Non-rectangular equipment sensitivity

The previous analysis assumes the equipment sensitivity has a rectangular shape. Nonrectangular sensitivity curves require a little more effort. They have to be approximated through a number of rectangular steps. Consider Figure 9-17 as an example. The equipment sensitivity is characterized or approximated by a shape with two knees. The disruption region is the combination of all three shaded rectangular areas A, B, and C. Knee #1 is positioned on the 20 sags contour line. Knee #2 of the sensitivity curve is at about the 24-sag contour line using linear interpolation. A third “knee” for area C is at the 15-sag contour.

The curve with only knee #1 is rectangular consisting of area B and area C. Equipment with such a curve would trip for 20 sags. Likewise, area A and area C (knee #2) represent equipment that would trip 24 sags. Notice that area C is shared by both knees. Simply adding the sags for knee #1 and knee #2 would overestimate the total sags by double counting area C. The mathematics to avoid double counting are shown below.

Total number of sags = area A + area B + area C. (9-8)

 Copyright © 1998 IEEE. All rights reserved.

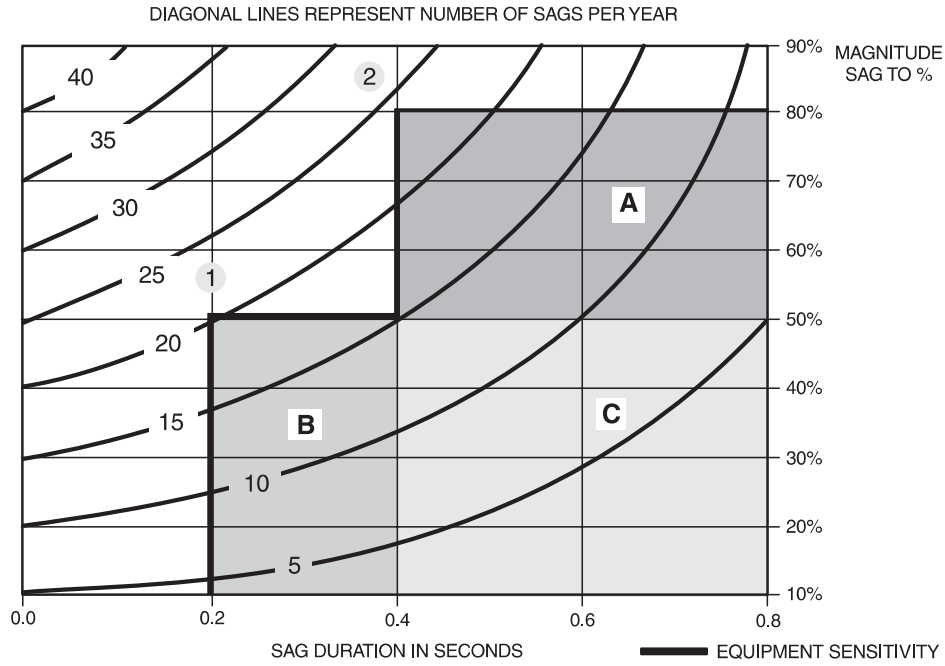


**Figure 9-17—Approximation of nonrectangular sensitivity curves**

For knee #1, there are 20 sags. Therefore

$$B + C = 20 \tag{9-9}$$

For knee #2, interpolation is required. Interpolation gives about 24 sags. Therefore

$$A + C = 24 \tag{9-10}$$

Area C represents 15 sags. Thus C = 15. With Equations (9-9) and (9-10) it is now easy to find that A = 11 and B = 5.

Substituting the values A = 11, B = 5 and C = 15 in (8) gives the total number of sags:

$$A + B + C = 5 + 9 + 15 = \textit{29 disrupting sags} \tag{9-11}$$

Thus, the sag coordination chart predicts 29 disruptions per year for this nonrectangular equipment sensitivity. A simple counting effort on Figure 9-17 (as with the dots in Figure 9-15 confirms the 29 disruptions. (It is also possible to overlay the equipment sensitivity over Table 9-13 and total the sags for a similar result.)

Copyright © 1998 IEEE. All rights reserved.

### 9.7.4 Example of system performance using typical measured data

The following example develops the supply system sag performance based on data supplied by the Electric Power Research Institute's Distribution Power Quality Project (Wagner et al., [B18]). The data represents 222 distribution feeders in the USA from 1 June 1993 to 1 June 1994. This example develops exactly in the same manner as the simple example shown earlier.

Table 9-15 shows the number of sags per year per site as a function of magnitude and duration. For example, there were 6.8 sags per site per year with magnitudes between 60% and 70% and durations of less than 200 ms.

**Table 9-15—Sample data from EPRI DPQ Project—Number of events per year**

| Magnitude bin | Time bin (in seconds) | | | | |
|---|---|---|---|---|---|
| | **0.0 < 0.2** | **0.2 < 0.4** | **0.4 < 0.6** | **0.6 < 0.8** | **≥ 0.8** |
| >80–90% | 53.1 | 4.8 | 1.9 | 0.7 | 2.9 |
| >70–80% | 14.1 | 1.7 | 0.2 | 0.2 | 0.4 |
| >60–70% | 6.8 | 0.9 | 0.1 | 0.1 | 0.2 |
| >50–60% | 3.5 | 0.9 | 0.2 | 0.0 | 0.2 |
| >40–50% | 1.4 | 0.4 | 0.2 | 0.0 | 0.3 |
| >30–40% | 1.5 | 0.1 | 0.1 | 0.0 | 0.3 |
| >20–30% | 1.2 | 0.3 | 0.2 | 0.2 | 0.4 |
| >10–20% | 1.0 | 0.1 | 0.0 | 0.0 | 0.5 |
| 0–10% | 1.9 | 0.7 | 0.7 | 0.2 | 6.4 |

Table 9-16 presents the total sags worse than or equal to the magnitude and duration headings. For example, there were 16.3 sags to 80% or lower lasting 0.2 s or longer per site per year.

Figure 9-18 shows the supply system sag performance contours over the one year of measurements.

For the equipment tolerance curve in Figure 9-16 one can now expect about nine spurious trips per year for the supply characterized in Figure 9-18. (From Table 9-16 a value of 9.4 is found.) For the equipment tolerance curve in Figure 9-17, the expected number of spurious trips is about 12 + 13 – 9 = 16. (From Table 9-16 a value of 10.9 + 11.2 – 9.4 = 12.7 is found.)

 Copyright © 1998 IEEE. All rights reserved.

**Table 9-16—Sum of events worse than or equal to the magnitude and duration for EPRI DPQ example**

| Magnitude | Time (in seconds) | | | | |
|---|---|---|---|---|---|
| | 0.0 | 0.2 | 0.4 | 0.6 | 0.8 |
| 90% | 111.2 | 26.7 | 16.8 | 13.2 | 11.7 |
| 80% | 47.8 | 16.3 | 11.2 | 9.6 | 8.8 |
| 70% | 31.0 | 13.7 | 10.4 | 8.9 | 8.4 |
| 60% | 22.9 | 12.4 | 9.9 | 8.6 | 8.2 |
| 50% | 17.9 | 10.9 | 9.4 | 8.3 | 7.9 |
| 40% | 15.7 | 10.0 | 8.9 | 8.0 | 7.6 |
| 30% | 13.6 | 9.5 | 8.5 | 7.7 | 7.3 |
| 20% | 11.4 | 8.5 | 7.7 | 7.1 | 6.9 |
| 10% | 9.8 | 7.9 | 7.2 | 6.6 | 6.4 |

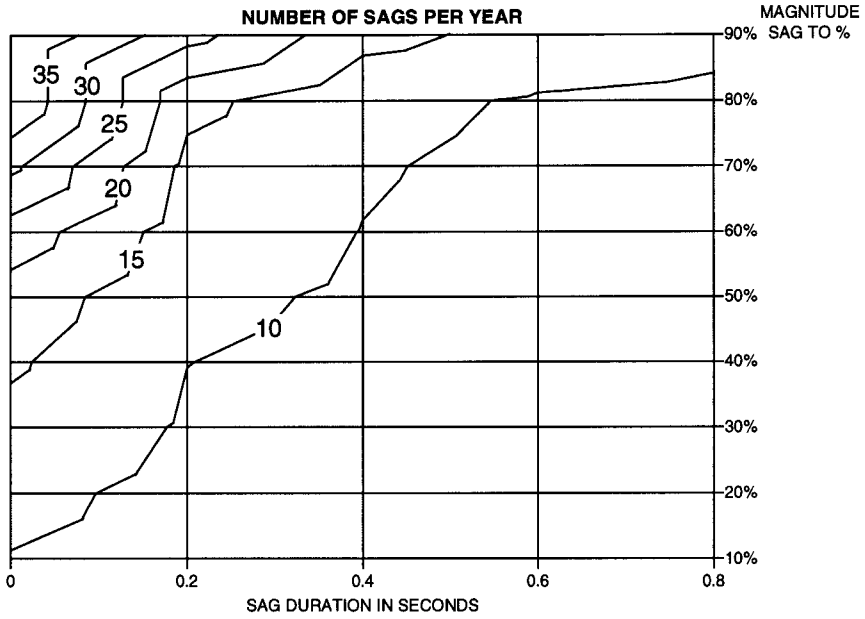


**Figure 9-18—Sags per year for 222 EPRI DPQ Project sites from 1 June 1993–1 June 1994**

Copyright © 1998 IEEE. All rights reserved.

It might appear here that Table 9-16 gives more accurate results than the sag coordination chart in Figure 9-18. One should remember that this kind of accuracy in monitoring results is rare, that the difference is not significant from a stochastic point of view, and that a more dense set of contours in Figure 9-18 would give more "accurate" results from there as well.

## 9.8 Conclusions and future work

The method for voltage sag coordination described in this chapter is an important improvement in the power quality field. The procedure enables customers, utilities, and equipment manufacturers to quantify the performance of their process, supply, or device. This will no doubt lead to a better understanding of spurious trips and an improvement in performance.

But the method as presented here still has its limitations. The main assumption is that a voltage sag can be characterized through one duration and one magnitude and that this magnitude and duration uniquely determine the equipment behavior. Unfortunately this is not always the case. Clause 9.2 already mentioned some of the confusion in characterizing the sag. Aspects that could influence equipment behavior are the point-on-wave of fault initiation; the phase-angle jump in the voltage associated with a sag; the imbalance between the three phases for three-phase equipment; the long post-fault sag due to inrush in heavily loaded systems; the post-fault overvoltage when faults are cleared by current-limiting circuit breakers or fuses; and the variation in equipment tolerance over the production or loading cycle.

Each factor will have to be evaluated to determine its influence on equipment. If the influence is likely to be significant, assessment methods will have to be developed and the coordination method described in this paper will have to be extended.

The method has this far only been concerned with voltage sags. Other voltage disturbances can be included easily as long as they are characterized by a magnitude and a duration. For swells and momentary interruptions, this will be straightforward. Fast voltage transients will be much harder to characterize. For sustained interruptions the method presented here has limited value. The other chapters of this recommended practice discuss the methods for sustained interruptions. It is assumed that a disturbance either leads to an equipment trip or not. Either this method can be extended, or one of the many existing methods can be used for sustained interruptions.

## 9.9 Bibliography

[B1] IEEE Std 446-1995, IEEE Recommended Practice for Emergency and Standby Power Systems for Industrial and Commercial Applications (ANSI).[2]

[B2] IEEE Std 1159-1995, IEEE Recommended Practice for Monitoring Electric Power Quality (ANSI).

[2]IEEE publications are available from the Institute of Electrical and Electronics Engineers, 445 Hoes Lane, P.O. Box 1331, Piscataway, NJ 08855-1331, USA.

 Copyright © 1998 IEEE. All rights reserved.

[B3] Bollen, M. H. J., "The influence of motor re-accaleration on voltage sags," *IEEE Industry Applications Society Annual Meeting*, 2–6 Oct. 1994, Denver, CO, pp. 1461–1568.

[B4] Caldron, R., Fauri, M., and Fellin, L., "Voltage sag effects on continuous industrial processes: desensitizing study for textile manufacture," Proceedings of the Second International Conference on Power Quality, pp. D-13:1–7, Palo Alto CA: Electric Power Research Institute, 1992.

[B5] Conrad, L., Grigg, C., and Little, K., "Predicting and preventing problems associated with remote fault clearing voltage dips," IEEE Transactions on Industry Applications, vol. 27, no. 1, pp. 167–172, Jan/Feb 1991.

[B6] Dorr, D., "Power quality study—1990 to 1995, initial results," *IEEE–APEC 1992*, paper 92CH3089-0/0303.

[B7] Goldstein, M., and Speranza, P., "The quality of U.S. commercial ac power," IEEE paper CH1818-4/82/000-00028, 1982.

[B8] Grigg, C., Conrad, L., and Little, K., "Impact of radial vs. meshed configuration on voltage sensitive variable speed drives," *First Southern Electric Industry Applications Symposium*, New Orleans, LA, Nov. 1988.

[B9] Gulachenski, E., "New England Electric's power quality research study," *Proceedings of the Second International Conference on Power Quality*, pp. F-11:1–10, Palo Alto, CA: Electric Power Research Institute, 1992.

[B10] Gunther, E., Thompson, J., Dwyer, R., and Mehta, H., "Monitoring power quality levels on distribution systems," *Proceedings of the Second International Conference on Power Quality*, pp. E-23:1–9, Palo Alto, CA: Electric Power Research Institute, 1992.

[B11] IEEE Power System Relaying Committee Report, "Distribution line protection practices—industry survey results," *IEEE Transactions on Power Delivery*, vol. 3, pp. 514–24, Apr. 1988.

[B12] IEEE Power System Relaying Committee Report, "Line protection design trends in the USA and Canada," *IEEE Transactions on Power Delivery*, vol. 3, pp. 1530–35, Oct. 1988.

[B13] Jones, W., Conrad S., Buckner, B., and Mueller, D., "'Inside Intel' monitoring power quality manufacturing i486TM microprocessors," *Proceedings of the Second International Conference on Power Quality*, pp. D-14:1–10, Palo Alto, CA: Electric Power Research Institute, 1992.

[B14] Key, T., "Diagnosing power quality-related computer problems," *IEEE Transactions on Industry Applications*, vol. 15, no. 4, pp. 381–393, Jul./Aug. 1979.

[B15] McGranaghan, M., Mueller, D., and Samotyj, M., "Voltage sags in industrial systems," *IEEE Transactions on Industry Applications*, vol. 29, no. 2, pp. 397–403, Mar./Apr. 1993.

Copyright © 1998 IEEE. All rights reserved.

[B16] Melhorn, C.J., Hofmann, P., and Samotey, M., “Characterisation of power quality problems associated with large commercial customers served from large underground distribution network systems,” *Industrial and Commercial Power Systems Technical Cont.*, 1–5 May 1994, Irvine, CA, pp. 117–125.

[B17] Voltage Sag Working Group, L. Conrad, Chair, “Proposed Chapter 9 for predicting voltage sags (dips) in revision to IEEE Std 493,” *IEEE Transactions on Industry Applications*, vol. 30, no. 3, pp. 805–821, May/June 1994.

[B18] Wagner, V., Andreshak, A., and Staniak, J., “Power quality and factory automation,” *IEEE Transactions on Industry Applications*, vol. 26, no. 4, pp. 620–626, Jul./Aug 1990.

 Copyright © 1998 IEEE. All rights reserved.

# Chapter 10
# Reliability compliance testing for emergency and standby power systems

## 10.1 Introduction

The design and operation of power equipment and systems may or may not be in compliance with specifications dictated by both the manufacturers and their customers. One of the difficulties in practice is to define a "testing plan" to demonstrate whether the performance of new or existing power equipment and systems comply with these dual specifications or not. This chapter presents the development of a detailed generalized statistical model of an equipment reliability testing plan and compares it with IEC 60605 (1982) [B3].[1] Detailed references, discussions, definition of terms, illustrations, and a case study will be presented to provide an understanding of the complex area of demonstrating the reliability of new or existing power equipment and systems. The ability of equipment and systems to operate as reliably and economically as possible is an important need of society (see IEEE Std 446-1995 [B1]).

From a manufacturer's viewpoint, power equipment and systems must be tested to determine whether they meet or exceed desirable performance specifications. In testing a system for adequacy, the manufacturer can interpret a negative test result in several ways. For example, a single negative test result implies the system being tested does not conform to the manufacturer's specifications and is therefore unreliable. However, it is important to note that a single negative test result may or may not statistically demonstrate that a system's performance is unreliable. A testing plan involving more than one test and a statistical criteria for adequacy is usually required to resolve the dilemma of demonstrating system adequacy. A negative test result may occur by chance when the actual system's reliability is equal to or greater than its specifications. In these situations, the manufacturer runs a risk of rejecting a system that is acceptable according to specifications, which is a costly venture.

From a customer's viewpoint, the acquisition of power equipment or a system has been justified, for example, from a reliability cost/reliability worth analysis (see IEEE Std 493-1990 [B2]) in which the cost of interruptions exceeds the cost of not having this equipment or system. In many cases, equipment and systems are a mandatory requirement dictated by various regulators (see IEEE Std 446-1995[B1]. However, the acceptance of equipment or a system that does not conform to a customer's specifications (e.g., an unacceptable system reliability level) can quickly erase the economic benefits of having this system.

From both perspectives, power equipment or systems that meet or exceed the specifications of both parties are desirable. To achieve this objective, a testing plan must be developed that clearly defines the number of tests required to demonstrate whether a system conforms or does not conform to various manufacturer and customer specifications. The testing plan must define the number of tests to be performed and the number of allowable failures for compliance and noncompliance to the equipment's specifications. The defined limits of acceptance

[1]The numbers in brackets preceded by the letter B correspond to those of the bibliography in 10.12.

Copyright © 1998 IEEE. All rights reserved.

or rejection of a system's performance must minimize the risks to the manufacturers and their customers (e.g., rejecting equipment that complies with the manufacturer's specifications and accepting equipment that does not comply with the customer's specifications). An emergency and standby system, for example, may be considered to be inadequate if it fails to respond immediately after the detection of a power supply interruption or if it fails to maintain continuity of service to the load for some specified period.

The frequency of system failures is dependent upon many factors, including the following:

- The use of new or old technology in the design of the system
- If the system is a combination of old and new components
- The stress placed on the system during operation (e.g., beyond the design limits)
- The frequency of maintenance
- Frequency of "utilizing" a system and the manner in which the utilization is performed
- Equipment characteristics and environmental factors, etc.

The overall performance of power equipment and systems can often be characterized by a single variable, its failure rate. The failure rate of electrical equipment can exhibit various characteristics (see IEEE Std 493-1990 [B2] and Jensen and Peterson [B4]). It is often assumed that the equipment's failure rate, tends to follow the "bathtub curve" (see Jensen and Peterson [B4]) in which the equipment's early life is characterized by a high failure rate which decreases with time until it stabilizes at an approximate constant value for a long period of time. As the electrical equipment reaches the end of its designed life, its failure rate begins to significantly increase with time. In the testing model developed in this chapter, it will be assumed that the failure rate of electrical equipment is a constant value (i.e., an average value) or is represented by the percentage of the time the system fails to comply with its specifications under test and/or operation.

## 10.2 Definition of success ratio

One of the key variables defined by IEC in its sampling plans is called a "success ratio." A success ratio (R) is defined in IEC 60605 [B3] as the probability that a system will perform a required function (e.g., an emergency and standby system starting and operating for a fixed period of time) or a test will be successful under stated conditions (i.e., conforming to specifications). An observed success ratio is the ratio of the number of successful tests at the completion of testing to the total number of tests performed on the equipment or system.

In this chapter the terms *equipment* and *systems* will be used interchangeably. The proposed testing plan can be applied to individual power equipment (e.g., components) or systems composed of power equipment provided their operational performance is characterized by two success ratios specified by the manufacturers and their customers.

 Copyright © 1998 IEEE. All rights reserved.

## 10.3 Acceptance sampling plan

The probability of obtaining different combinations of successful and failed test results after *n* tests will be initially characterized by the binomial distribution given by

$$P(n,r) = nCr(R)^{n-r}\ (Q)r \tag{10-1}$$

where

*r* is the cumulative number of failed tests after *n* tests;
*n* is the number of tests performed;
*R* is the equipment or system success ratio;
*Q* is the equipment or system failure ratio equal to (1 – *R*); and
*nCr* is the binomial coefficient.

A common viewpoint on demonstrating reliability performance of equipment is to subject the equipment or system to a series of tests. If the equipment passes all the tests, it is then concluded that the equipment is acceptable and complies with the specifications. If the equipment fails any of the tests, it is unacceptable. This belief may be problematic, depending upon the number of tests performed and the success ratios defined by the manufacturers and their customers.

System operating characteristic curves show the probability of accepting the performance of equipment under test as adequate (i.e., compliance to specifications) as a function of success ratios. Each curve represents a fixed number of tests. The acceptance criterion is defined by a fixed number of observable failures. If after *n* tests, the number of observable test failures is less than or equal to the fixed number, then the performance of the system or equipment is assumed to be acceptable and complies with its specifications. A typical operating characteristic curve for an acceptance criteria of observing no failures after *n* trials is shown in Figure 10-1.

The probability of accepting equipment performance as adequate after observing “no” failures after *n* tests is given by

$$P(n,0) = R^n = Pa \tag{10-2}$$

For a fixed success ratio (*R*), the probability of accepting the performance exhibited by a system as adequate decreases significantly as the number of tests increases. If the number of tests conducted is low, there is a high probability of accepting the test results concluding the system is adequate even if its success ratio is low.

## 10.4 Minimizing manufacturer and customer risks

The determination of the adequacy of an emergency and standby power system based on a fixed number of tests and an acceptance criteria may or may not minimize the risks to both the manufacturer and their customers. For a given number of tests, an acceptance criteria

Copyright © 1998 IEEE. All rights reserved.

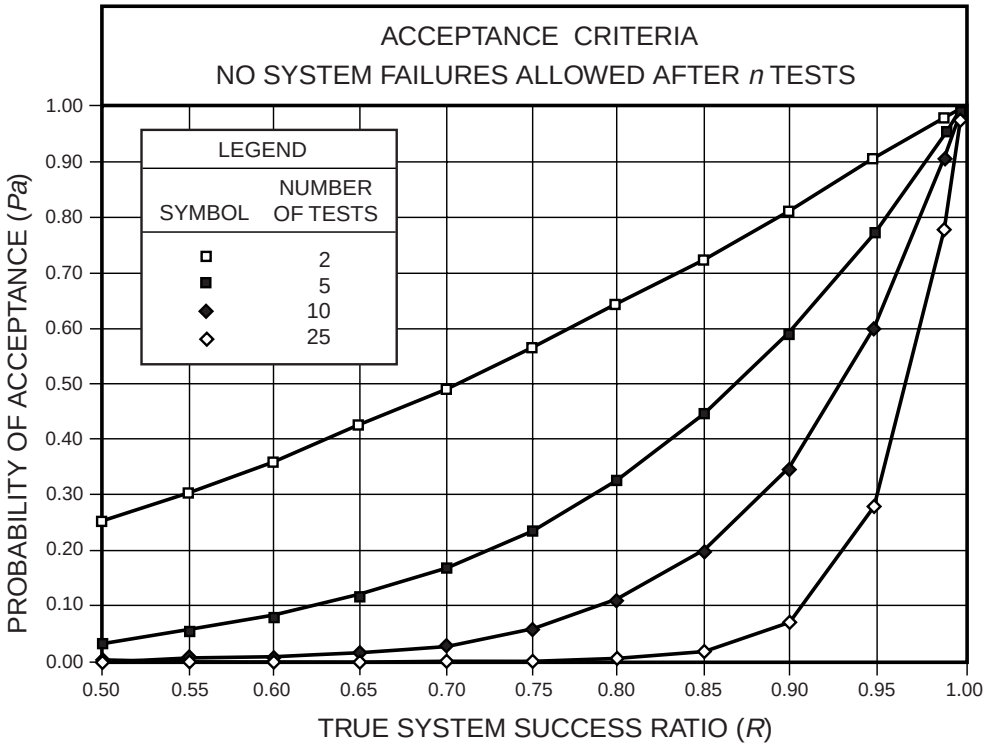


**Figure 10-1—System operating characteristic curves for no test failures**

specifies the number of successful test results that must be observed to demonstrate that a given system's performance complies with certain specifications. In this subclause, the risks are not included in the acceptance criteria as defined above.

A system operating curve for 25 tests and an acceptance criteria of allowing no failures to be observed during the testing plan is shown in Figure 10-2. The manufacturer usually specifies a success ratio (*Ro*) for the system that is often incorporated in the system specifications. The objective of the testing plan is to demonstrate that a system's success ratio is at least the value *Ro*. During the testing plan, the manufacturer runs a risk of the test *revealing that the system is inadequate* when in reality the system's true success ratio is at least equal to the manufacturer's acceptable level of *Ro* (e.g., *Ro* = 0.99 in Figure 10-2). The probability of this event happening is defined as $\alpha$ (e.g., 0.22).

The major risk to the customer from the results of a testing plan is the acceptance of a system as adequate when the true system success ratio is equal to the customer's unacceptable value of *R*1 (e.g., *R*1 = 0.97, Figure 10-2). The probability of this event occurring (*Pa*1), i.e., the risk to the customer is $\beta$ (e.g., $\beta$ = 0.47, Figure 10-2). If the customer's risk is too high for a given success ratio *R*1, then the number of tests must be increased to reduce the value of $\beta$ as

 Copyright © 1998 IEEE. All rights reserved.

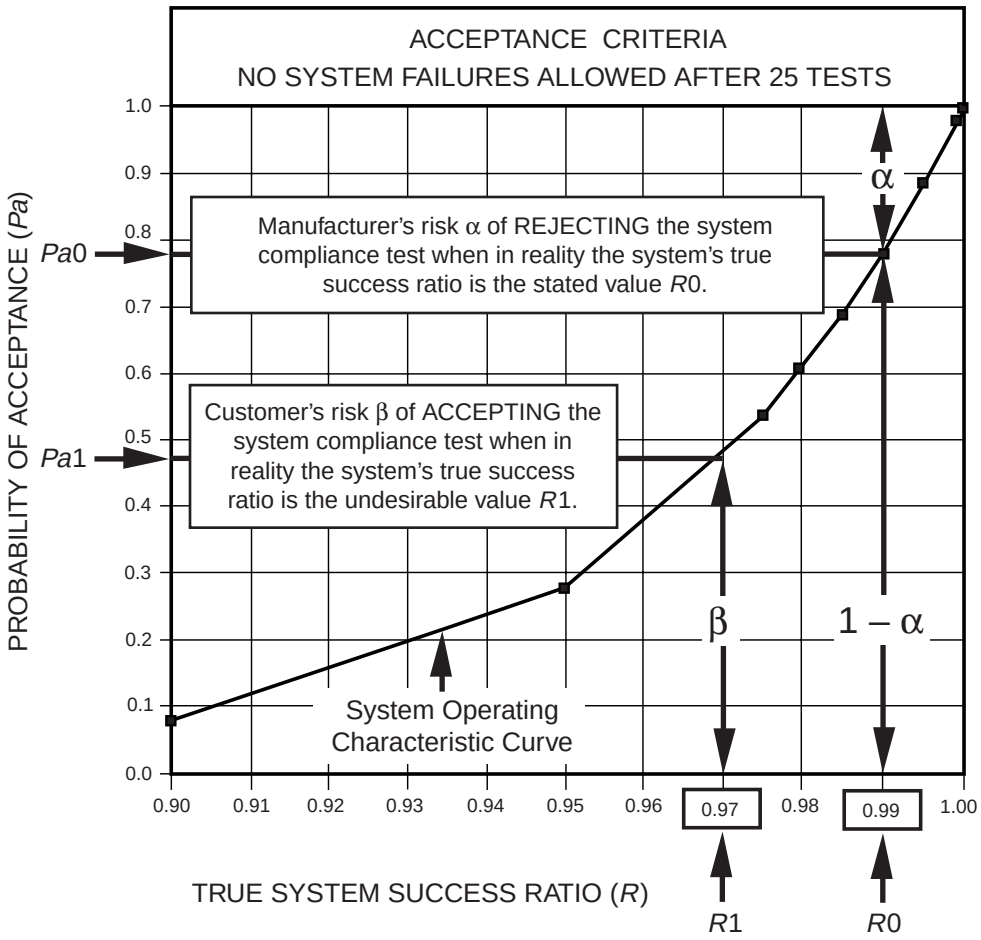


**Figure 10-2—System operating characteristic curve indicating manufacturer and customer's risks**

can be seen from Figure 10-1. The fundamental question that must be answered is, "How many tests are requed to minimize the unique risk levels defined by the manufacturers and their customers?"

## 10.5 Sequential testing plan

A sequential testing plan is analogous to a continuous game of testing a system and observing whether the test results are positive or negative (i.e., the system passes or fails). If the test results are positive, 0 points are scored. If the test results are negative, 1 point is scored. The testing of the system continues and the scores are summed after each test.

Copyright © 1998 IEEE. All rights reserved.

If the cumulative score is below a certain defined value after *x* tests, then the testing procedure is stopped and it is concluded that the system meets our required specifications. If the cumulative score at any time during the test exceeds a certain defined value *r* after *n* tests, then the testing procedure is stopped and it is concluded that the system does not meet required specifications.

The difficulty with the testing plan is that the limits of the game (i.e., *r*, the number of failed tests; *x* and *n*, the number of tests to be performed) have to be defined. In addition to these unknowns, the game can be further restricted by minimizing the risk to the manufacturer (i.e., $\alpha$) of rejecting systems that comply with the manufacturer's specifications and minimizing the risk to the customers (i.e., $\beta$) of accepting systems that do not comply with the customer's specifications. These specifications define what is considered "adequate" for the manufacturer and "not adequate" for the customer.

## 10.6 Development of a sequential testing plan

Abraham Wald's "Sequential Probability Ratio Plan" [B5] provides a testing procedure for determining the boundaries in an compliance test for accepting and rejecting a system's performance as a function of the number of tests *n* and the number of failed tests *r* permitted given the following test parameters:

— An acceptable value of success ratio *Ro* specified by the manufacturer;
— An unacceptable value of success ratio *R*1 specified by the customer;
— The manufacturer's risk $\alpha$ (i.e., the probability of the compliance test rejecting a system whose true success ratio is equal to the desired level *Ro*);
— The customer's risk $\beta$ (i.e., the probability of the compliance test accepting a system's performance whose success ratio is equal to the undesirable level *R*1).

The probability of obtaining a sample equal to the observed set of test results $\{x_1, x_2, x_3, ..., x_n\}$ where $x_i$ is the result of the *i*th test, i.e., either a "0" for a successful trial or a "1" for an unsuccessful trial is given by

$$K\,R^{n-r}\,(Qo)^r \tag{10-3}$$

where

*n* is the number of tests performed;
*r* is the number of unsuccessful tests in *n* tests;
*R* is the success ratio of the observed set of test results [$R = (n-r)/r$];
*Q* ($Q = 1 - R$); and
*K* number of possible ways of achieving a success ratio of *R* at the end of *n* tests.

NOTE—*K* is not the binomial coefficient.

 Copyright © 1998 IEEE. All rights reserved.

If the actual system success ratio $R = Ro$, the manufacturer's desired level, then the probability of obtaining a sample meeting this constraint is given by

$$K\,Ro^{n-r}\,(Qo)^{r} \tag{10-4}$$

Conversely, if the true system success ratio $R = R1$, the customer's undesired level, then the probability of obtaining a sample with a success ratio equal to $R1$ is given by

$$K\,R1^{n-r}\,(Q1)^{r} \tag{10-5}$$

Once the test parameters $Ro$, $R1$, $\alpha$, and $\beta$ have been defined, the number of unknown variables ($n$ is the number of tests and $r$ is the number of failures) can be determined from the sequential probability ratio (SPR) (Wald [B5]) of Equations (10-3) and (10-4) as follows:

$$\text{SPR} = [[K\,Ro^{n-r}\,(Qo)^{r}] / [K\,R1^{n-r}\,(Q1)^{r}] \tag{10-6}$$

## 10.7 Compliance sequential test acceptance limits

The numerator of SPR shown in Equation (10-6) can be interpreted to be the probability of a set of test results (whose success ratio equals $Ro$) being accepted and should be greater than or equal to $(1 - \alpha)$ to comply with the manufacturer's risk specification. The denominator of SPR can be interpreted to be the probability of a set of test results (whose success ratio equals $R1$) being accepted and should be greater than or equal to $\beta$ to comply with the customer's risk specification.

Equation (10-6) can be rewritten to include the acceptance risks to both the customer and manufacturer as follows:

$$[(1 - \alpha)/\beta] = [[K\,Ro^{n-r}\,(Qo)^{r}] / [K\,R1^{n-r}\,(Q1)^{r}]] \tag{10-7}$$

Every set of values $(n,r)$ that satisfies the above equation represents an acceptance coordinate in an $n$ vs. $r$ Cartesian coordinate system. The solution of the variables $n$ and $r$ proceeds as follows:

Taking logarithms of both sides of Equation (10-7) yields

$$\log[(1 - \alpha)/\beta] = (n-r)\log(Ro/R1) + r\,\log(Qo/Q1) \tag{10-8}$$

which can be reduced to

$$\log[(1 - \alpha)/\beta] = (n)\log(Ro/R1) + (r)\log(Qo\,R1/Q1Ro) \tag{10-9}$$

Copyright © 1998 IEEE. All rights reserved.

The number of defects *r* for the compliance test as a function of the number of tests *n* is given by

$$r \leq \frac{\log[(1-\alpha)/\beta] - (n)\log(Ro/R1)}{\log(Qo\ \ R1/Q1\ \ Ro)} \tag{10-10}$$

The above equation can be rearranged to conform to the IEC 605-5 [B3] as follows:

$$r = \frac{(n)\log(Ro/R1) - \log[(1-\alpha)/\beta]}{\log(Q1\ Ro/Qo\ R1)} \tag{10-11}$$

$$r \leq sn - ho \tag{10-12}$$

where

$$s = \frac{\log(Ro/R1)}{\log(Q1\ Ro\ /\ Qo\ R1)} \tag{10-13}$$

$$ho = \frac{\log[(1-\alpha)\ /\beta]}{\log(Q1\ Ro\ /\ Qo\ R1)} \tag{10-14}$$

With reference to Equation (10-11), if *r* is equal to or less than the calculated value, the values of *r* will satisfy the constraints on the testing plan imposed by Equation (10-7). The value of *r* in *n* tests is acceptable indicating that the system complies with the specifications imposed on it.

Equation (10-12) is a linear equation whose abscissa is *n* (the number of tests to be performed) and *r* (the number of acceptable test failures for acceptance) as the ordinate. This is graphically illustrated in Figure 10-3.

An examination of Figure 10-3 reveals, for example, that a minimum number of 107 tests in which no failures occurred is required to state that the system complies with specifications dictated by the customer and manufacturer (i.e., for a fixed $\alpha$, $\beta$, *Ro*, and *R*1).

## 10.8 Compliance sequential test rejection limits

The numerator of SPR shown in Equation (10-6) can be interpreted to be the probability of a set of test results (whose success ratio equals *Ro*) being rejected. The probability should be less than or equal to $\alpha$ to comply with the manufacturer's risk specification. The denominator of SPR can be interpreted to be the probability of a set of test results (whose success ratio equals *R*1) being rejected. The probability should be less than or equal to $(1 - \beta)$ to comply with the customer's risk specifications.

 Copyright © 1998 IEEE. All rights reserved.

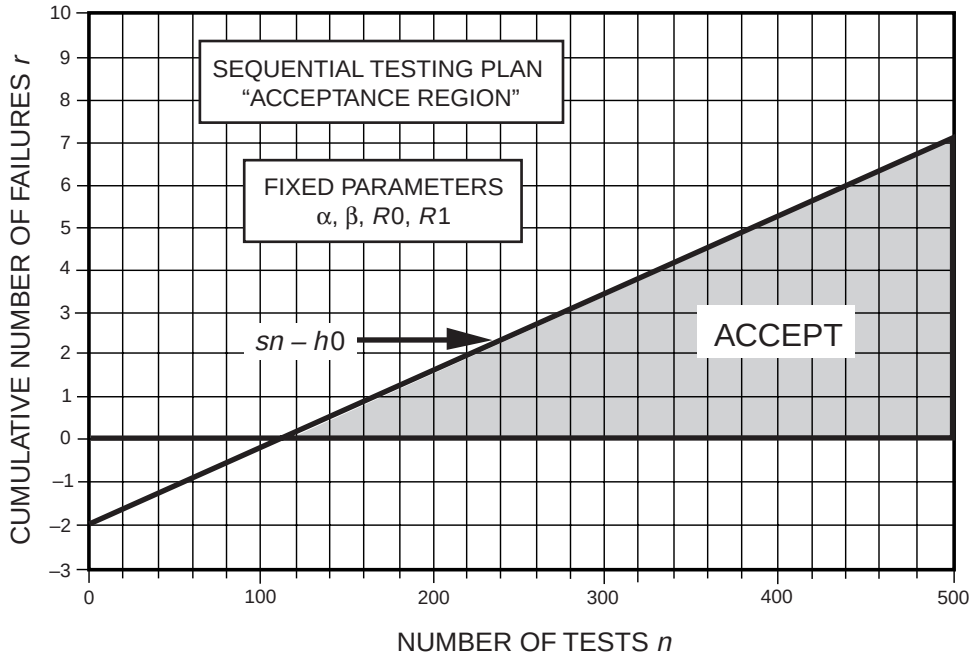


**Figure 10-3—Number of tests vs. number of failures required to demonstrate compliance to system specifications**

Equation (10-6) can be rewritten to include the rejection risks to both the customer and manufacturer as follows:

$$[\alpha/(1-\beta)] = [[K\,Ro^{n-r}\,(Qo)^{r}] / [K\,R1^{n-r}\,(Q1)^{r}]] \tag{10-15}$$

Every set of values ($n$,$r$) that satisfies the above equation represents a rejection coordinate in an $n$ vs. $r$ Cartesian coordinate system. The solution of $n$ and $r$ proceeds as follows:

Taking logarithms of both sides of Equation (10-15) yields

$$\log[\alpha/(1-\beta)] = (n-r)\log(Ro/R1) + r\log(Qo/Q1) \tag{10-16}$$

which can be reduced to

$$\log[\alpha/(1-\beta)] = (n)\log(Ro/R1) + (r)\log(Qo\,R1/Q1Ro) \tag{10-17}$$

The number of unacceptable defects $r$ for compliance test as a function of the number of tests $n$ is given by

$$r = \frac{\log([\alpha/(1-\beta)] - (n)\log(Ro/R1))}{\log(Qo\,R1/Q1\,Ro)} \tag{10-18}$$

Copyright © 1998 IEEE. All rights reserved.

The above equation can be rearranged to conform to the IEC 605-5 [B3] as follows:

$$r = \frac{(n)\log(Ro/R1) - \log[(1-\beta)/\alpha]}{\log(Q1\ Ro/Qo\ R1)} \quad (10\text{-}19)$$

$$r \geq sn + h1 \quad (10\text{-}20)$$

where

$$s = \frac{\log(Ro/R1)}{\log(Q1\ Ro/Qo\ R1)} \quad (10\text{-}21)$$

$$h1 = \frac{\log[(1-\beta)/\alpha]}{\log(Q1\ Ro/Qo\ R1)} \quad (10\text{-}22)$$

With reference to Equation (10-19), if *r* is equal to or less than the calculated value, the values of *r* will satisfy the constraints on the testing plan imposed by Equation (10-7) resulting in the conclusion that the system is unacceptable and does not comply with its specifications.

Equation (10-20) is a linear equation in terms of *n* and *r* where *r* is the number of test failures required to demonstrate that the system under test is unacceptable. The region of rejection lies above the line described by Equation (10-20) and is illustrated in Figure 10-4.

An examination of Figure 10-4 reveals, for example, that if after approximately 75 tests more than three failures are observed, then the system does not comply with its specifications. If the three failures occur before the 75th test, then the testing plan is halted and the system is assumed to be unacceptable and does not comply with its specifications.

The acceptance and rejection lines shown in Figures 10-3 and 10-4, respectively, can be merged into a single graph, as shown in Figure 10-5. The area between the acceptance and rejection lines is a statistical transition area where it is necessary to continue testing until a clear decision can be reached.

## 10.9 Case study

A manufacturer of emergency and standby systems and one of his key customers have agreed to share their field data for this case study. Both parties insisted on remaining anonymous. The manufacturer stated to the customer that his emergency and standby power system was designed for an average success ratio *Ro* = 0.99 based on field records. Based on the customer's reliability cost/reliability worth studies, it was concluded that the emergency and standby power system would be uneconomical and unacceptable if the system's success ratio was less than 0.97 (i.e., *R*1).

Further economical studies and discussion between the manufacturer and the customer resulted in an agreement to share the risks of the compliance test. The "risk level" was set at 10% (i.e., $\alpha = \beta = 0.10$). An examination of Figure 10-5 reveals a total of 108 tests in which

 Copyright © 1998 IEEE. All rights reserved.

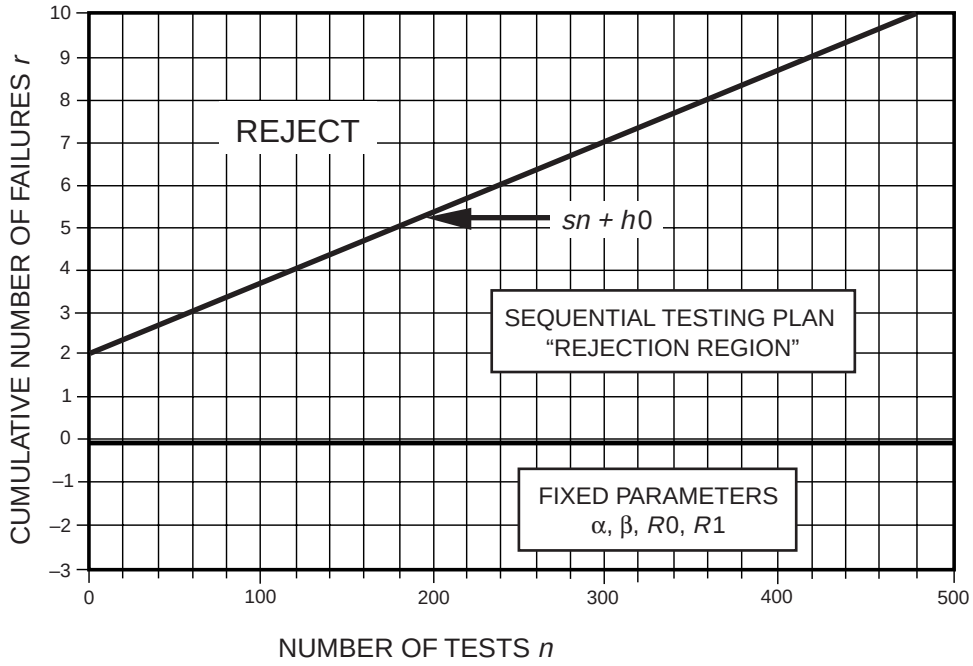


**Figure 10-4—Number of tests vs. number of failures required to demonstrate noncompliance to system specifications**

no system failures occurred. this rate is required to demonstrate that the emergency and standby power system complies with the sequential test specifications.

The customer specified that the manufacturer had to demonstrate the success ratio of his emergency and standby system for three years (i.e., based on the sequential test specifications agreed to by the manufacturer and the customer) after the installation of the system. The nature of the installation required it to be tested weekly and detailed records of successful tests and failures were maintained as shown in Table 10-1.

An examination of Table 10-1 reveals a total of three system failures were observed by the 47th test. When the (47,3) coordinate is plotted on Figure 10-5, the point lies in the rejection zone, i.e., the system *does not* meet specifications.

A thorough investigation of the emergency and standby power system by the manufacturer and the customer revealed a major installation error, which was subsequently corrected. The sequential testing plan was then initiated. After 163 tests, only one failure was observed. When the (163,1) coordinate is plotted on the (*n,r*) Cartesian coordinate system shown in Figure 10-5, the point lies in the acceptance zone, i.e., the emergency and standby power system is acceptable and complies with the manufacturer/customer sequential test specifications.

Copyright © 1998 IEEE. All rights reserved.

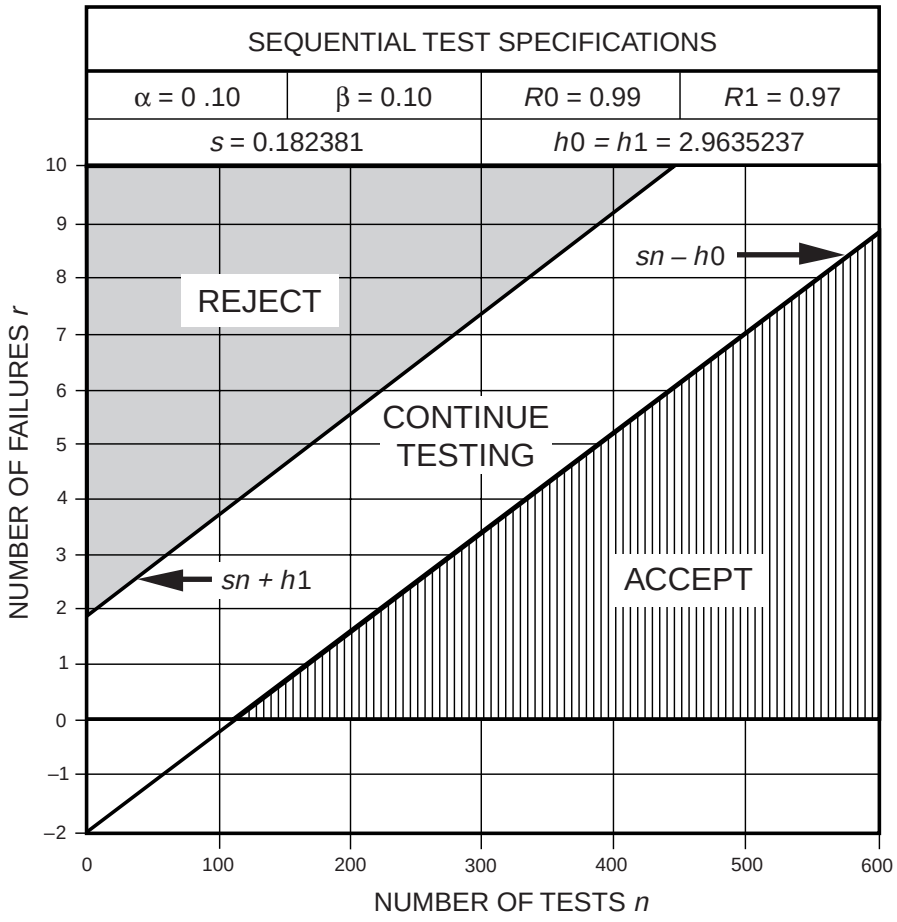


**Figure 10-5—Number of tests vs. number of failures, sequential test boundaries**

## 10.10 Discussion of sequential tests

Initially, viewers of Figure 10-5 may conclude that many tests are required to statistically demonstrate that a system's performance complies with its specifications. For this case study, their conclusion would be correct. However, it is important to understand that the number of tests required to demonstrate that a system does or does not comply with specifications is entirely dependent upon the "sequential test specifications" agreed to by manufacturers and their customers.

To illustrate the significance of these test specifications, the manufacturer's and customer's risk levels will be fixed at two distinct levels, the manufacturer's acceptable success ratio (*Ro*) will be fixed at 0.99 and the customer's undesirable success ratio (*R*1) will be allowed to vary.

 Copyright © 1998 IEEE. All rights reserved.

**Table 10-1—Sequential compliance test results**

| Test number | Test result(s) | Comments |
|---|---|---|
| 1–15 | Successful | — |
| 16 | *First failure* | Failed to pick up load |
| 17–25 | Successful | — |
| 26 | *Second failure* | DC power supply failure |
| 27–46 | Successful | — |
| 47 | *Third failure* | Failed to pick up load |
| Testing halted | *System fails compliance test* | |
| Manufacturer and customer detect a major installation error and correct it. | | |
| *Testing procedure initiated.* | | |
| 1–123 | Successful | — |
| 124 | *First failure* | Hardware failure |
| 124–163 | Successful | — |
| Modified system complies with test specifications and is acceptable. | | |

Under these constraints, the number of successful tests in a row that are required to demonstrate system compliance is calculated (Equation 10-12) and the results are shown in Table 10-2.

A term used in IEC 60505 [B3] to differentiate between the manufacturer's desired success ratio (*Ro*) and the customer's undesirable success ratio (*R*1) is called a discrimination ratio (*DR*), which is defined as follows:

$$DR = \frac{Q1}{Qo} = \frac{1.0 - R1}{1.0 - Ro} \tag{10-23}$$

It is clear from the results shown in Table 10-2 that as the discrimination ratio increases, the number of tests required to demonstrate a system's compliance to the sequential test specifications significantly decreases for fixed manufacturer/customer risk level.

## 10.11 Conclusion

This chapter has presented the development of a generalized sequential test plan for demonstrating whether a power system and/or its parts comply with the specifications dictated by the customer and manufacturer. The number of observed system failures vs. the number of tests required for compliance evaluation is shown graphically.

Copyright © 1998 IEEE. All rights reserved.

**Table 10-2—Number of tests in which no observed failures occurred that are required to demonstrate system compliance**

| **Manufacturer's desired success ratio *Ro* = 0.99** | | | |
|---|---|---|---|
| | | **Number of sequential tests (Compliance with no failures)** | |
| **Customer success ratio (*R*1)** | **Discrimination ratio (*DR*)** | **$\alpha = \beta = 0.10$** | **$\alpha = \beta = 0.05$** |
| 0.98 | 2 | 217 | 290 |
| 0.97 | 3 | 108 | 145 |
| 0.95 | 5 | 54 | 72 |
| 0.90 | 10 | 24 | 31 |
| 0.85 | 15 | 15 | 20 |
| 0.80 | 20 | 11 | 14 |

Acceptance and rejection line are placed on the Cartesian coordinate system to define three distinct zones—reject, continue testing, and acceptance. These regions are defined completely by four parameters (i.e., *Ro*, *R*1, $\alpha$, and $\beta$) necessary to define the sequential test parameters.

When the difference between the customer's undesirable system success ratio (*R*1) and the manufacturer's desired system success ratio (*Ro*) is small, a large number of tests are required to statistically demonstrate that a system complies with these specifications. The large number of tests can be obtained by examining an existing emergency and standby system's testing data to validate its performance in conjunction with its specifications. For new systems, the testing procedure can be either done at the factory or after it has been installed; however, no conclusion as to the new system's adequacy can be stated until a significant number of successful test results has been obtained (e.g., see Table 10-2).

The acceptance and rejection line equations are expressed in a general form which allows the risks to the manufacturer and the customer to be unique (i.e., $\alpha$ not equal to $\beta$ ) as opposed to IEC 605-5 [B3], which accommodates only equal risk cases and references unequal risks cases.

## 10.12 Bibliography

[B1] IEEE Std 446-1995, IEEE Recommended Practice for Emergency and Standby Power Systems for Industrial and Commercial Applications (ANSI).[2]

 Copyright © 1998 IEEE. All rights reserved.

[B2] IEEE Std 493-1990, IEEE Recommended Practice for the Design of Reliable Industrial and Commercial Power Systems (ANSI).

[B3] IEC 60505 (1982): Equipment reliability testing, Part 5: Compliance test plans for success ratio.[3]

[B4] Jensen, F., and Petersen, N. E., *Burn-in: An Engineering Approach to the Design and Analysis of Burn-in Procedures*, New York: John Wiley & Sons, 1982.

[B5] Wald, Abraham, *Sequential Analysis*, New York: John Wiley & Sons, 1947.

[2]IEEE publications are available from the Institute of Electrical and Electronics Engineers, 445 Hoes Lane, P.O. Box 1331, Piscataway, NJ 08855-1331, USA.

[3]This publication has been withdrawn by IEC. For information, contact the IEC, 3 rue de Varembé, P.O. Box 131, 1211 Geneva 20, Switzerland.

Copyright © 1998 IEEE. All rights reserved.

## Appendixes A-P

(These appendixes are not a part of IEEE Std 493-1997, IEEE Recommended Practice for the Design of Reliable Industrial and Commercial Power Systems, and are included for information only.)

## Appendix A
## Report on Reliability Survey of Industrial Plants

### Part 1
### Reliability of Electrical Equipment

### Part 2
### Cost of Power Outages, Plant Restart Time, Critical Service Loss Duration Time, and Type of Loads Lost versus Time of Power Outages

### Part 3
### Causes and Types of Failures of Electrical Equipment, the Methods of repair, and the Urgency of Repair


By
Reliability Subcommittee
Industrial and Commercial Power Systems Committee
IEEE Industry Applications Society

**W.H. Dickinson,** *Chair*

P.E. Gannon C.R. Heising A.D. Patton
M.D. Harris D.W. McWilliams W.J. Pearce
R.W. Parisian



**Industrial and Commercial Power Systems Technical Conference**
**Institute of Electrical and Electronics Engineers, Inc.**
**Atlanta, Georgia**
**May 13-16, 1973**

Published by
*IEEE Transactions on Industry Applications*
Mar./Apr. 1974.


Copyright © 1998 IEEE. All rights reserved.

This page is intentionally blank

# Report on Reliability Survey of Industrial Plants, Part I: Reliability of Electrical Equipment

IEEE COMMITTEE REPORT

*Abstract*—An IEEE sponsored survey of electrical equipment reliability in industrial plants was completed during 1972. The results are reported from this survey which included a total of 1982 equipment failures that were reported by 30 companies covering 68 plants in nine industries in the United States and Canada.

## Introduction

A KNOWLEDGE of the reliability of electrical equipment is an important consideration in the design of power distribution systems for industrial plants. It is possible to make quantitative reliability comparisons between alternative designs of new systems and then use this information in cost-reliability tradeoff studies to determine which type of power distribution systems to use [1]-[10]. The cost of power outages at the various plant locations can be factored into the decision as to which type of power distribution system to use. These decisions can then be based upon total owning cost over the useful life of the equipment rather than first cost.

In 1969 a Reliability Working Group was formed under the Industrial Plants Power Systems Subcommittee, Industrial and Commercial Power Systems Committee. In 1972 the activity was changed to a Reliability Subcommittee under the same Committee. One of the major activities of the Reliability Working Group and the Reliability Subcommittee has been to conduct a survey of equipment reliability in industrial plants. This survey was conducted during the latter half of 1971 and the early part of 1972 and attempted to update a similar survey [11] which had been conducted eleven years ago. The results from the present survey contain data on failure rate and average downtime per failure for 74 equipment categories. The Reliability Subcommittee also felt that additional information was needed in the present survey beyond what was collected twelve years ago. Some of the additional information is the following:

1) cost of power outages of industrial plants;
2) plant restart time;
3) critical service loss duration time;
4) type of loads lost versus time of power outages;
5) repair or replacement time data;
6) repair urgency information;
7) causes and types of failures;
8) maintenance data and policies.

Paper TOD-73-158, approved by the Industrial and Commercial Power Systems Committee of the IEEE Industry Applications Society for presentation at the 1973 Industrial and Commercial Power Systems Technical Conference, Atlanta, Ga., May 13-16. Manuscript released for publication November 5, 1973.

Members of the Reliability Subcommittee of the IEEE Industrial and Commercial Power Systems Committee are W. H. Dickinson, *Chairman*, P. E. Gannon, M. D. Harris, C. R. Heising, D. W. McWilliams, R. W. Parisian, A. D. Patton, and W. J. Pearce.

It is not practical to publish all the results contained in the survey in a single paper. They will be presented in six separate parts. The first three parts are published at this time

Part 1: Reliability of Electrical Equipment;
Part 2: Cost of Power Outages, Plant Restart Time, Critical Service Loss Duration Time, and Type of Loads Lost Versus Time of Power Outages [11];
Part 3: Causes and Types of Failures, Methods of Repair, and Urgency of Repair [12].

A major part of the data in these three papers are presented in summary form. It is expected that the additional three papers will be presented at a later date and will contain further in-depth information where questions have been raised to point out the need for such data.

## Survey Form

The survey form is shown in Appendix A. Three types of cards were used for reporting the information.

Card type 1 asks for data on plant identification and other general plant information.

Card type 2 asks for data on a specific equipment class, including the total number of installed units, on their failure experience, on maintenance practices, and on estimated repair times of failed equipment.

Card type 3 asks for data on each individual failure reported on a card type 2.

It was necessary to provide definitions for "failure" and "repair time."

A *failure* is defined as any trouble with a power system component that causes any of the following to occur:

1) partial or complete plant shutdown, or below-standard plant operation;
2) unacceptable performance of user's equipment;
3) operation of the electrical protective relaying or emergency operation of the plant electrical system;
4) de-energization of any electric circuit or equipment.

A failure on a public utility supply system may cause the user to have either 1) a power interruption or loss of service, or 2) a deviation from normal voltage or frequency of sufficient magnitude or duration to disrupt plant production. A failure on an in-plant component causes a forced outage of the compo-

Copyright © 1998 IEEE. All rights reserved.

nent, and the component thereby is unable to perform its intended function until it is repaired or replaced.

*Repair time* of a failed component or duration of a failure is the clock hours from the time of the occurrence of the failure to the time when the component is restored to service, either by repair of the component or by substitution with a spare component. It is not the time required to restore service to a load by putting alternate circuits into operation. It includes time for diagnosing the trouble, locating the failed component, waiting for parts, repairing or replacing, testing, and restoring the component to service.

### Response to Survey

A total of 30 companies responded to the survey questionnaire, reporting data on 68 plants from nine industries in the United States and Canada as shown in Table I. There was a total of 1982 equipment failures reported in the survey; this included more than 620 000 unit-years of experience. Many of the plants reported data covering more than one year of experience.

Most of the data were reported to the IEEE Reliability Subcommittee during late 1971 and early 1972. Unfortunately, a downturn in the business cycle during this period of time caused many companies to reduce their work force and because of this fewer were able to participate in the survey than had been originally hoped.

### Survey Data Preparation

All of the returned survey questionnaire forms were reviewed. An attempt was made to clarify any discrepancies that were detected. Usable data were punched onto IBM cards for use in data processing.

### Statistical Analysis of Equipment Failures

Two equipment parameters are of prime importance in making system reliability studies. These parameters are 1) failure rate and 2) average outage duration or repair time. The best estimate for the failure rate of a particular type of equipment is the number of failures actually observed, divided by the total exposure time in unit-years, that is,

$$\hat{\lambda} = \frac{f}{T} \tag{1}$$

where

$\hat{\lambda}$ best estimate of failure rate in failures per unit-year
$\lambda$ true failure rate
$f$ number of failures observed
$T$ total exposure time in unit-years.

Statements regarding the accuracy of failure rate estimates can be made through the use of confidence limits [10], [14]-[17]. Failure rate confidence limits are upper and lower values of failure rate such that the following equations hold:

$$\Pr\left[\lambda_L \geqq \lambda\right] = \frac{1-\gamma}{2} \tag{2}$$

$$\Pr\left[\lambda \geqq \lambda_U\right] = \frac{1-\gamma}{2} \tag{3}$$

where

$\lambda_L$ lower confidence limit of failure rate
$\lambda_U$ upper confidence limit of failure rate
$\gamma$ confidence interval (or confidence level).

A typical value often chosen for the confidence interval is 0.90. Once values for $\lambda_L$ and $\lambda_U$ are found, one can say that $\lambda$, whose best estimate is $\hat{\lambda}$, lies between $\lambda_L$ and $\lambda_U$ with $100\gamma$ percent confidence. Clearly the narrower the interval between $\lambda_L$ and $\lambda_U$, the greater one's confidence that $\hat{\lambda}$ is a good estimate of $\lambda$, the true failure rate. Expressions for $\lambda_L$ and $\lambda_U$ are given as follows [17]:

$$\lambda_L = \frac{\chi^2(1-\gamma)/2, 2f}{2T} \tag{4}$$

$$\lambda_U = \frac{\chi^2(1+\gamma)/2, 2f+2}{2T} \tag{5}$$

where $\chi^2 p, n$ is the $p$ percentage point of a chi-squared distribution with $n$ degrees of freedom. $\chi^2 p, n$ is tabled in statistical handbooks.

By substituting the value of $T$ from (1) into (4) and (5) we get

$$\lambda_L = \frac{\chi^2(1-\gamma)/2, 2f}{2f}(\hat{\lambda}) \tag{6}$$

$$\lambda_U = \frac{\chi^2(1+\gamma)/2, 2f+2}{2f}(\hat{\lambda}). \tag{7}$$

The deviation of the lower confidence level from $\hat{\lambda}$ in percent of $\hat{\lambda}$ is

$$\%\text{dev}_L = 100\left(1 - \frac{\lambda_L}{\hat{\lambda}}\right). \tag{8}$$

Similarly, the deviation of the upper confidence level from $\hat{\lambda}$ in percent of $\hat{\lambda}$ is

$$\%\text{dev}_U = 100\left(\frac{\lambda_U}{\hat{\lambda}} - 1\right). \tag{9}$$

Equations (6)-(9) were used to develop Fig. 1. These curves avoid the need of looking up $\chi^2 p, n$. Here $\lambda_L$ and $\lambda_U$ are plotted in terms of percent deviation from $\lambda$ as a function of the observed number of failures.

The best estimate for the average outage duration or repair time for a particular type of equipment is simply the average of the observed outage durations. Confidence limit expressions for average outage durations are also available if the distributional nature of outage durations is known [17]. However, such expressions are not given here primarily because the average outage durations given in this paper are intended as a rough guide only. Equipment outage durations are believed to be more a function of the nature of a power system's operator than an inherent function of the equipment itself. Hence, average outage durations for equipment used in reliability studies should be values believed most reasonable for the particular system being studied.

The data from the survey contained information on the failure and repair characteristics of 217 categories of equipment. However, the number of observed failures for many equipment categories was too small to allow adequately accurate estimates of failure rates to be made. The Reliability Subcommittee felt that a minimum of eight to ten observed failures was required for "good" accuracy when estimating equipment failure rates (see Fig. 1). Therefore, whenever possible and reasonable from an engineering point of view, equipment categories having less than ten observed failures were combined with other categories so as to bring the number of observed failures in the combined category up to a minimum of ten. In some cases an equipment category with a large number of



Copyright © 1998 IEEE. All rights reserved.

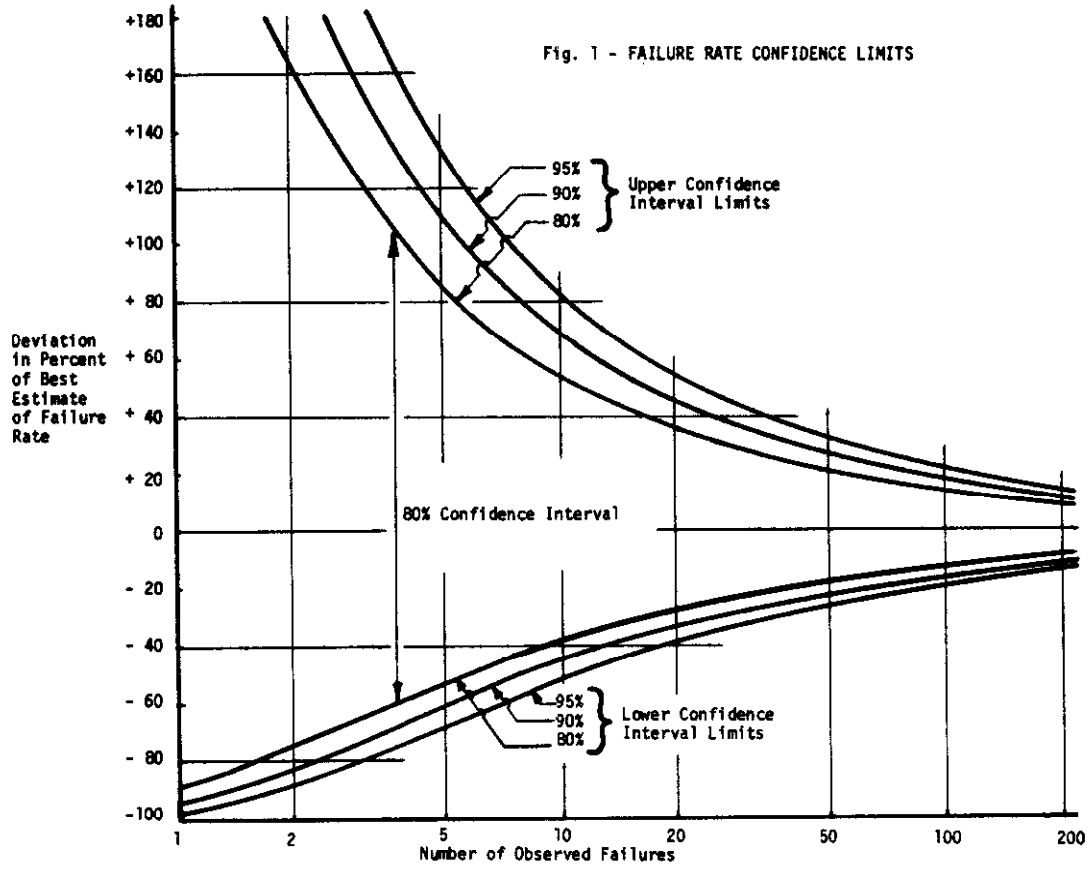


Fig. 1 - FAILURE RATE CONFIDENCE LIMITS

TABLE 1 - RESPONSE TO SURVEY QUESTIONNAIRE

| Type of Industry | Number of Companies | Number of Plants |
|---|---|---|
| All Industry - USA & Canada..... | 30* | 68 |
| Auto..... | 0 | 0 |
| Cement..... | 0 | 0 |
| Chemical..... | 8 | 21 |
| Metal..... | 3 | 3 |
| Mining..... | 0 | 0 |
| Petroleum..... | 5 | 8 |
| Pulp and Paper..... | 1 | 1 |
| Rubber & Plastics..... | 3 | 3 |
| Textile ..... | 1 | 3 |
| Other Light Manufacturing..... | 4 | 17 |
| Other Heavy Manufacturing..... | 1 | 2 |
| Other..... | 9 | 10 |
| Foreign..... | 1 | 1 |

*Some companies include more than one industry

Copyright © 1998 IEEE. All rights reserved.

observed failures was further subdivided. In most cases the equipment size attribute was eliminated by combining categories that were identical except for equipment size. These steps reduced the original 217 equipment categories to the 74 categories published in this paper. A total of 66 equipment categories have eight or more observed failures each; the other eight categories have between four and seven observed failures each.

### Survey Results of Equipment Failures

Table 2 gives a summary of the "All Industry" equipment failure rate and equipment outage duration data for the 66 equipment categories that contain eight or more failures. The "actual hours downtime per failure" is based upon the actual outage data of the failed equipment; the "industry average" uses all equipment failures, and the "median plant average" uses all plants that reported actual outage time data on equipment failures.

The 1962 survey [11] contained equipment outage duration data on failures that have been challenged for two reasons.

1) Repairing a failed component may take much longer than replacing with a spare (for example, a large power transformer).

2) The urgency for repair is a significant factor in the outage time (low priority repairs may take days or weeks).

In order to help correct these deficiencies, two additional columns on "repair" and "replace with spare" were included in the survey and contain average estimated clock hours to fix failure during a 24-hour work day. These estimates are averaged over all the plants participating in the survey, even where there were no actual failures. These results are reported in Table 2 and are not included in the more detailed Tables 3-19.

Tables 3-19 give more detailed data on equipment failure rate and actual hours of equipment downtime per failure for 74 equipment categories; this includes the 66 equipment categories in Table 2 plus the eight equipment categories containing from four to seven failures. The additional detail includes

1) sample size in unit years;
2) number of failures;
3) number of plants reporting data;
4) additional data on actual hours of downtime per failure;
5) data for various industry groups where there were ten or more failures in that industry.

The data on average estimated clock hours to fix failure during 24-hour work day have been omitted from Tables 3-19.

The reliability data in Tables 14, 16, and 18 on cables, joints, and terminations represent a different look at the same data that are contained in Tables 13, 15, and 17. One set of tables looks at the type of insulation and the other set of tables looks at the application of the cable.

### General Comments and Discussion

A survey that collects data from many plants often contains errors. Some of the errors are due to a misinterpretation of the question by the respondent, and in other cases they can be caused by omission.

Many of the respondents apparently misinterpreted the question on "number of installed units" for double- or triple-circuit electric utility power supplies. In addition, there was some confusion on the outage time after a failure of a single circuit of a double- or triple-circuit utility power supply. See the separate discussion elsewhere in this paper on these points. These are the only known major problems of misinterpretation of survey questions.

It is suspected that the failure rate estimates may be biased on the high side due to the tendency of companies to report only on equipment that has actually experienced failures. In other words, some companies may have omitted submitting unit-years of experience data on equipment that had no failures. This factor may be partially balanced out by the belief that the companies that participated in the survey may be the ones that have the best maintenance programs and keep the best records and thus may have lower failure rates than the average.

It is expected that a future paper will contain a comparison of the equipment reliability from this survey with the results from the previous survey [11] that was published in 1962. A preliminary comparison has been made and shows the following overall conclusion for 1973 versus 1962.

1) The 1973 equipment failure rates are about 0.6 times the 1962 failure rates.

2) The 1973 average downtime per failure is about 1.6 times the 1962 average downtime per failure.

3) The product of failure rate times average downtime per failure is almost the same in 1973 as 1962.

Both of these parameters are within a factor of two; and this is often the best accuracy that can be expected from reliability data.

How accurate are the failure rates shown in Tables 2-19? Fig. 1 shows the upper and lower confidence limits of the failure rate versus the number of failures observed. It can be seen that ten failures has upper and lower confidence limits of +70 percent and -46 percent for a 90 percent confidence interval. It is possible to determine the upper and lower confidence limits for the failure rate data shown in Tables 3-19.

### Example of Confidence Limit Calculation

The use of Fig. 1 to determine confidence limits will be illustrated with an example. Suppose that it is desired to compute confidence limits on the failure rate of liquid-filled transformers with voltage above 15 kV in the chemical industry. The desired confidence interval is 90 percent. From Table 4, $\hat{\lambda} = 0.0119$ failures per unit-year, and the number of observed failures is 19. Entering Fig. 1 with 19 observed failures and using the 90 percent confidence interval curves yields

$$\lambda_L = \hat{\lambda} - 0.34\hat{\lambda}$$
$$= 0.0119 - 0.0041 = 0.0078 \text{ failures per unit-year}$$
$$\lambda_U = \hat{\lambda} + 0.46\hat{\lambda}$$
$$= 0.0119 + 0.0055 = 0.0174 \text{ failures per unit-year.}$$

There is a 90 percent chance that the true failure rate lies between 0.0078 and 0.0174 failures per unit-year.


Copyright © 1998 IEEE. All rights reserved.

TABLE 2 - SUMMARY OF "ALL INDUSTRY" EQUIPMENT FAILURE RATE AND EQUIPMENT OUTAGE DURATION DATA FOR 66 EQUIPMENT CATEGORIES CONTAINING 8 OR MORE FAILURES

| Equipment | Equipment Sub Class | Failure Rate-Failures per Unit-Year | Actual Hours Downtime per Failure | | Average Estimated Clock Hours to Fix Failure During 24 Hour Work Day | |
|---|---|---|---|---|---|---|
| | | | Industry Average | Median Plant Average | Repair Failed Component | Replace with Spare |
| Electric Utility Power Supplies.. | All..... | 0.643 | 1.33 | 1.04 | - | - |
| " " " " | Single Circuit..... | 0.537 | 5.66 | 5.10 | - | - |
| " " " " | Double or Triple Circuit-All..... | 0.622 | 0.85 | 1.17 | - | - |
| " " " " | Automatically Switched Over..... | 0.735 | 0.59 | 0.93 | - | - |
| " " " " | Manual Switchover..... | 0.458 | 1.87 | 2.00 | - | - |
| " " " " ... | Loss of All Circuits at One Time.. | 0.119 | 2.00 | 1.58 | - | - |
| Transformers..... | Liquid Filled-All..... | 0.0041 | 529. | 219. | 378. | 73.4 |
| " | 601 - 15,000 Volts - All Sizes..... | 0.0030 | 174. | 49. | 382. | 74.3 |
| " | 300-750 kVA..... | 0.0037 | 61.0 | 10.7 | 49.0 | 3.7 |
| " | 751-2,499 kVA..... | 0.0025 | 217. | 64. | 297. | 39.7 |
| " | 2,500 kVA & up..... | 0.0032 | 216. | 60.0 | 618. | 150. |
| " | Above 15,000 Volts..... | 0.0130 | 1076. | 1260. | 367. | 71.5 |
| " | Dry Type; 0 - 15,000 Volts..... | 0.0036 | 153. | 28. | 67. | 39.9 |
| " ..... | Rectifier; Above 600 Volts..... | 0.0298 | 380. | 80. | 300. | 20.0 |
| Circuit Breakers..... | Fixed Type (Incl. molded case) - All.. | 0.0052 | 5.8 | 4.0 | 31.7 | 4.5 |
| " " | 0 - 600 Volts - All Sizes..... | 0.0044 | 4.7 | 4.0 | 6.0 | 2.0 |
| " " | 0 - 600 amps..... | 0.0035 | 2.2 | 1.0 | 4.0 | 2.0 |
| " " | Above 600 amps..... | 0.0096 | 9.6 | 8.0 | 8.0 | 2.0 |
| " " | Above 600 Volts..... | 0.0176 | 10.6 | 3.8 | 44.5 | 12.0 |
| " " | Metalclad Drawout - All..... | 0.0030 | 129. | 7.6 | 54.2 | 3.9 |
| " " | 0 - 600 Volts - All sizes..... | 0.0027 | 147. | 4.0 | 47.2 | 2.9 |
| " " | 0 - 600 amps..... | 0.0023 | 3.2 | 1.0 | 75.6 | 1.2 |
| " " | Above 600 amps..... | 0.0030 | 232. | 5.0 | 29.4 | 4.0 |
| " " | Above 600 Volts..... | 0.0036 | 109. | 168. | 62.4 | 5.2 |
| Motor Starters..... | Contact Type; 0 - 600 Volts..... | 0.0139 | 65.1 | 24.5 | 8.0 | 4.6 |
| " " ..... | Contact Type; 601 - 15,000 Volts..... | 0.0153 | 284. | 16.0 | 23.6 | 13.8 |

Copyright © 1998 IEEE. All rights reserved.

TABLE 2 (Continued)

| Equipment | Equipment Sub Class | Failure Rate - Failures per Unit-Year | Actual Hours Downtime per Failure: Industry Average | Actual Hours Downtime per Failure: Median Plant Average | Average Estimated Clock Hours to Fix Failure During 24 Hour Work Day: Repair Failed Component | Average Estimated Clock Hours to Fix Failure During 24 Hour Work Day: Replace with Spare |
|---|---|---|---|---|---|---|
| Motors | Induction; 0 - 600 Volts | 0.0109 | 114. | 18.3 | 50.2 | 13.0 |
| " | Induction; 601 - 15,000 Volts | 0.0404 | 76.0 | 91.5 | 71.4 | 19.7 |
| " | Synchronous; 0 - 600 Volts | 0.0007 | 35.3 | 35.3 | 32.0 | 10.0 |
| " | Synchronous; 601 - 15,000 Volts | 0.0318 | 175. | 153. | 146. | 18.7 |
| " | Direct Current - All | 0.0556 | 37.5 | 16.2 | 69.0 | 5.3 |
| Generators | Steam Turbine Driven | 0.032 | 165. | 66.5 | 234. | 201. |
| " | Gas Turbine driven | 0.638 | 23.1 | 92.0 | 190. | 400. |
| Disconnect Switches | Enclosed | 0.0061 | 3.6 | 2.8 | 50.1 | 13.7 |
| Switchgear Bus - Indoor & Outdoor (Unit = Number of Connected Circuit breakers or Instrument Transformer Compartments) | Insulated; 601 - 15,000 Volts | 0.00170 | 261. | 26.8 | 41.0 | 66.0 |
| | Bare; 0 - 600 Volts | 0.00034 | 550. | 24.0 | 41.5 | 24.5 |
| | Bare; Above 600 Volts | 0.00063 | 17.3 | 13.0 | 20.6 | 7.3 |
| Bus duct - Indoor & Outdoor (Unit = One Circuit Foot) | All Voltages | 0.000125 | 128. | 9.5 | 12.9 | 6.0 |
| Open Wire (Unit = 1,000 Circuit Feet) | 0 - 15,000 Volts | 0.0189 | 42.5 | 4.0 | 4.6 | 8.0 |
| | Above 15,000 Volts | 0.0075 | 17.5 | 12.0 | 8.0 | - |
| Cable - All Types of Insulation. (Unit = 1,000 Circuit Feet) | Above Ground & Aerial | | | | | |
| | 0 - 600 Volts | 0.00141 | 457. | 10.5 | 20.8 | 39.7 |
| | 601 - 15,000 volts - All | 0.01410 | 40.4 | 6.9 | 26.8 | 60.4 |
| | In Trays Above Ground | 0.00923 | 8.9 | 8.0 | 49.4 | 119. |
| | In Conduit Above Ground | 0.04918 | 140. | 47.5 | - | 19.8 |
| | Aerial Cable | 0.01437 | 31.6 | 5.3 | 10.6 | 28.0 |
| | Below Ground & Direct Burial | | | | | |
| | 0 - 600 Volts | 0.00388 | 15.0 | 24.0 | - | 26.8 |
| | 601 - 15,000 Volts - All | 0.00617 | 95.5 | 35.0 | 20.4 | 26.8 |
| | In Duct or Conduit Below Ground | 0.00613 | 96.8 | 35.0 | 20.9 | 26.8 |
| " | Above 15,000 Volts | 0.00336 | 16.0 | 16.0 | 16.0 | - |

Copyright © 1998 IEEE. All rights reserved.

TABLE 2 (Continued)

| Equipment | Equipment Sub Class | Failure Rate - Failures per Unit-Year | Actual Hours Downtime per Failure | | Average Estimated Clock Hours to Fix Failure During 24 Hour Work Day | |
|---|---|---|---|---|---|---|
| | | | Industry Average | Median Plant Average | Repair Failed Component | Replace with Spare |
| Cable..... | 601 - 15,000 Volts | | | | | |
| (Unit = 1,000 Circuit Feet)... | Thermoplastic..... | 0.00387 | 44.5 | 10.0 | 22.5 | 29.3 |
| " | Thermosetting..... | 0.00889 | 168. | 26.0 | 27.2 | 55.2 |
| " | Paper Insulated Lead Covered..... | 0.00912 | 48.9 | 26.8 | 17.3 | 18.3 |
| " ..... | Other..... | 0.01832 | 16.1 | 28.5 | 23.2 | 44.8 |
| Cable Joints -All Types of Insul. | 601 - 15,000 Volts | | | | | |
| " " ..... | In Duct or Conduit Below Ground.. | 0.000864 | 36.1 | 31.2 | 14.7 | 5.5 |
| Cable Joints..... | 601 - 15,000 Volts | | | | | |
| " " | Thermoplastic..... | 0.000754 | 15.8 | 8.0 | 12.6 | 22.0 |
| " " ..... | Paper Insulated Lead Covered..... | 0.001037 | 31.4 | 28.0 | 30.0 | - |
| Cable Terminations - All Types of Insulation..... | Above Ground & Aerial | | | | | |
| " " " " | 0 - 600 Volts..... | 0.000127 | 3.8 | 4.0 | 8.0 | 8.0 |
| " " " " | 601 - 15,000 Volts - All..... | 0.000879 | 198. | 11.1 | 34.6 | 40.6 |
| " " " " | Aerial Cable..... ..... | 0.001848 | 48.5 | 11.3 | 15.3 | 18.0 |
| " " " " | in Trays Above Ground..... | 0.000333 | 8.0 | 9.0 | 48.8 | 58.3 |
| " " " " | In Duct or Conduit Below Ground | | | | | |
| " " ..... | 601 - 15,000 Volts..... | 0.000303 | 25.0 | 23.4 | 28.8 | 30.0 |
| Cable Terminations..... | 601 - 15,000 Volts | | | | | |
| | Thermoplastic..... | 0.004192 | 10.6 | 11.5 | 12.0 | 12.0 |
| " " | Thermosetting..... | 0.000307 | 451. | 11.3 | 30.2 | 42.8 |
| " " ..... | Paper Insulated Lead Covered... | 0.000781 | 68.8 | 29.2 | 39.0 | 30.0 |
| Miscellaneous..... | Inverters..... | 1.254 | 107. | 185. | 5.0 | 8.0 |
| " ..... | Rectifiers..... | 0.038 | 39.0 | 52.2 | 41.5 | 12.0 |

Copyright © 1998 IEEE. All rights reserved.

TABLE 3 - ELECTRIC UTILITY POWER SUPPLIES

| Number of Plants in Sample Size | Sample Size Unit - Years | Number of Failures Reported | Industry | Equipment Sub Class | Failure Rate - Failures per Unit-Year | Actual Hours Downtime/Failure | | | |
|---|---|---|---|---|---|---|---|---|---|
| | | | | | | Industry Average | Minimum Plant Average | Median Plant Average | Maximum Plant Average |
| 30 | 314.4 | 202 | All..... | All..... | 0.643 | 1.33 | * | 1.04 | 24.0 |
| 7 | 70.8 | 38 | " ..... | Single Circuit..... | 0.537 | 5.66 | 0.25 | 5.10 | 10.3 |
| 23 | 210.7 | 131 | " ..... | Double or Triple Circuit - All.... | 0.622 | 0.85 | * | 1.17 | 24.0 |
| 17 | 140.2 | 103 | " ..... | Automatically Switched Over..... | 0.735 | 0.59 | * | 0.93 | 6.00 |
| 6 | 54.6 | 25 | " ..... | Manual Switchover..... | 0.458 | 1.87 | 1.82 | 2.00 | 24.0 |
| 23 | 210.7 | 25 | " ..... | Loss of All Circuits At One Time | 0.119 | 2.00 | * | 1.58 | 6.00 |
| 7 | 64.8 | 20 | Chemical..... | All..... | 0.309 | 1.42 | * | 1.58 | 6.00 |
| 7 | 64.8 | 20 | " ..... | Double or Triple Circuit - All.... | 0.309 | 1.42 | * | 1.58 | 6.00 |
| 6 | 60.1 | 20 | " ..... | Automatically Switched Over..... | 0.333 | 1.42 | * | 1.58 | 6.00 |
| 3 | 46.5 | 10 | Petroleum..... | All..... | 0.215 | 6.80 | 0.33 | 4.95 | 9.57 |
| 2 | 18.5 | 49 | Textile..... | All..... | 2.649 | 0.28 | 0.014 | 2.17 | 4.33 |
| 2 | 18.5 | 49 | " ..... | Double or Triple Circuit - All.... | 2.649 | 0.28 | 0.014 | 2.17 | 4.33 |
| 1 | 3.4 | 46 | " ..... | Automatically Switched Over..... | 13.46 | 0.014 | 0.014 | 0.014 | 0.014 |
| 5 | 67.3 | 27 | Other Light Manuf. | All..... | 0.402 | 1.34 | ** | 0.58 | 24.0 |
| 4 | 51.3 | 22 | " " " | Double or Triple Circuit - All.... | 0.429 | 1.51 | ** | 0.79 | 24.0 |
| 3 | 27.3 | 15 | " " " | Automatically Switched Over..... | 0.549 | 0.51 | ** | 0.04 | 1.46 |

* 19 cycles
** 2 seconds



Copyright © 1998 IEEE. All rights reserved.

TABLE 4 - TRANSFORMERS

| Number of Plants in Sample Size | Sample Size Unit-Years | Number of Failures Reported | Industry | | Failure Rate - Failures per Unit-Year | Actual Hours Downtime/Failure | | | |
|---|---|---|---|---|---|---|---|---|---|
| | | | | | | Industry Average | Minimum Plant Average | Median Plant Average | Maximum Plant Average |
| 33 | 15,210 | 63 | All..... | Liquid Filled - All... | 0.0041 | 529. | 2.0 | 219. | 3744. |
| 30 | 13,210 | 39 | " ..... | 601-15,000 volts - All Sizes.... | 0.0030 | 174. | 2.0 | 49. | 840. |
| 12 | 3,002 | 11 | " ..... | 300-750 kVA..... | 0.0037 | 61.0 | 4.5 | 10.7 | 336. |
| 18 | 6,040 | 15 | " ..... | 751 - 2,499 kVA..... | 0.0025 | 217. | 2.0 | 64.0 | 840. |
| 11 | 4,036 | 13 | " ..... | 2,500 kVA & up..... | 0.0032 | 216. | 24.0 | 60.0 | 403. |
| 12 | 1,848 | 24 | " ..... | Above 15,000 volts..... | 0.0130 | 1076. | 12.8 | 1260. | 3744. |
| 16 | 4,937 | 18 | " ..... | Dry Type; 0-15,000 volts..... | 0.0036 | 153. | 0.5 | 28. | 720. |
| 3 | 672 | 20 | " ..... | Rectifier, Above 600 volts..... | 0.0298 | 380. | 24.0 | 80. | 867. |
| 14 | 8,598 | 43 | Chemical..... | Liquid Filled - All..... | 0.0050 | 338. | 8.0 | 168. | 1800. |
| 12 | 6,838 | 24 | " ..... | 601-15,000 volts - All Sizes.... | 0.0035 | 52.3 | 8.0 | 48.5 | 336. |
| 7 | 3,274 | 10 | " ..... | 300-750 kVA..... | 0.0031 | 19.3 | 3.0 | 8.0 | 120. |
| 9 | 1,601 | 19 | " ..... | Above 15,000 volts..... | 0.0119 | 670. | 12.8 | 708. | 3600. |
| 2 | 662 | 16 | " ..... | Rectifier; Above 600 volts..... | 0.0242 | 425. | 80.0 | 474. | 867. |
| 3 | 2,512 | 14 | Petroleum..... | Liquid Filled - All..... | 0.0056 | 843. | 4.5 | 591. | 1178. |
| 3 | 2,334 | 10 | " ..... | 601-15,000 volts - All Sizes.... | 0.0043 | 244. | 4.5 | 204. | 403. |

Copyright © 1998 IEEE. All rights reserved.

TABLE 5 - CIRCUIT BREAKERS

| Number of Plants in Sample Size | Sample Size Unit-Years | Number of Failures Reported | Industry | | Failure Rate - Failures per Unit-Year | Actual Hours Downtime/Failure | | | |
|---|---|---|---|---|---|---|---|---|---|
| | | | | | | Industry Average | Minimum Plant Average | Median Plant Average | Maximum Plant Average |
| 16 | 9,501 | 49 | All..... | Fixed Type(includes molded case) - all | 0.0052 | 5.8 | 0.5 | 4.0 | 72.0 |
| 12 | 8,990 | 40 | " ..... | 0 - 600 volts - All Sizes..... | 0.0044 | 4.7 | 0.5 | 4.0 | 11.0 |
| 9 | 7,643 | 27 | " ..... | 0-600 amps..... | 0.0035 | 2.2 | 0.5 | 1.0 | 9.0 |
| 4 | 1,347 | 13 | " ..... | Above 600 amps..... | 0.0096 | 9.6 | 5.0 | 8.0 | 11.0 |
| 5 | 510 | 9 | " ..... | Above 600 volts..... | 0.0176 | 10.6 | 1.5 | 3.8 | 72.0 |
| 28 | 40,770 | 124 | " ..... | Metalclad, Drawout - All..... | 0.0030 | 129. | 0.3 | 7.6 | 890. |
| 18 | 24,490 | 66 | " ..... | 0-600 volts - All Sizes..... | 0.0027 | 147. | 0.2 | 4.0 | 894. |
| 11 | 11,270 | 26 | " ..... | 0-600 amps..... | 0.0023 | 3.2 | 0.2 | 1.0 | 4.0 |
| 13 | 13,220 | 40 | " ..... | Above 600 amps..... | 0.0030 | 232. | 0.2 | 5.0 | 894. |
| 22 | 16,280 | 58 | " ..... | Above 600 volts..... | 0.0036 | 109. | 1.1 | 168. | 883. |
| 5 | 1,961 | 20 | Chemical..... | Fixed Type(includes molded case) - All | 0.0102 | 8.1 | 4.3 | 9.0 | 11.0 |
| 3 | 1,520 | 15 | " ..... | 0-600 volts - All Sizes..... | 0.0099 | 9.5 | 5.0 | 9.0 | 11.0 |
| 2 | 937 | 13 | " ..... | Above 600 amps..... | 0.0139 | 9.6 | 5.0 | 8.0 | 11.0 |
| 7 | 10,850 | 33 | " ..... | Metalclad, Drawout - All..... | 0.0030 | 83.7 | 5.8 | 97.7 | 576. |
| 7 | 4,808 | 31 | " ..... | Above 600 volts..... | 0.0064 | 89.3 | 6.3 | 97.7 | 576. |
| 3 | 1,885 | 18 | Petroleum..... | Fixed Type(includes molded case) - All | 0.0095 | 5.8 | 1.0 | 4.0 | 72.0 |
| 2 | 1,817 | 17 | " ..... | 0-600 volts - All Sizes..... | 0.0094 | 1.9 | 1.0 | 2.5 | 4.0 |
| 2 | 1,817 | 17 | " ..... | 0-600 amps..... | 0.0094 | 1.9 | 1.0 | 2.5 | 4.0 |
| 3 | 10,430 | 28 | Textile..... | Metalclad, Drawout - All..... | 0.0027 | 289. | 0.3 | 4.0 | 890. |
| 3 | 9,655 | 25 | " ..... | 0-600 volts - All Sizes..... | 0.0026 | 218. | 0.3 | 4.0 | 894. |
| 2 | 4,943 | 19 | " ..... | 0-600 amps..... | 0.0038 | 3.8 | 0.3 | 2.2 | 4.0 |





Copyright © 1998 IEEE. All rights reserved.

TABLE 6 - MOTOR STARTERS

| Number of Plants in Sample Size | Sample Size Unit-Years | Number of Failures Reported | Industry | Equipment Sub Class | Failure Rate - Failures per Unit-Year | Actual Hours Downtime/Failure: Industry Average | Minimum Plant Average | Median Plant Average | Maximum Plant Average |
|---|---|---|---|---|---|---|---|---|---|
| | | | All..... | Contact Type | | | | | |
| 9 | 4,522 | 63 | " ..... | 0-600 volts..... | 0.0139 | 65.1 | 1.0 | 24.5 | 75.5 |
| 15 | 6,518 | 100 | " ..... | 601-15,000 volts..... | 0.0153 | 284. | 3.0 | 16.0 | 1440. |
| 3 | 854 | 5 | " ..... | Circuit Breaker..... | 0.0059 | 2.8 | 2.8 | 2.8 | 2.8 |
| 7 | 5,340 | 14 | Chemical..... | Contact Type; 601-15,000 volts..... | 0.0026 | 298. | 4.5 | 16.0 | 1323. |
| 1 | 207 | 51 | Metal..... | Contact Type; 0-600 volts..... | 0.2470 | 75.5 | 75.5 | 75.5 | 75.5 |
| 2 | 626 | 81 | Petroleum..... | Contact Type; 601-15,000 volts..... | 0.1294 | 1440. | 1440. | 1440. | 1440. |

TABLE 7 - MOTORS

| Number of Plants in Sample Size | Sample Size Unit-YEars | Number of Failures Reported | Industry | Equipment Sub Class | Failure Rate - Failures per Unit-Year | Actual Hours Downtime/Failure: Industry Average | Minimum Plant Average | Median Plant Average | Maximum Plant Average |
|---|---|---|---|---|---|---|---|---|---|
| | | | All..... | Induction | | | | | |
| 17 | 19,610 | 213 | " ..... | 0-600 volts..... | 0.0109 | 114. | 0.5 | 18.3 | 312. |
| 17 | 4,229 | 171 | " ..... | 601-15,000 volts..... | 0.0404 | 76.0 | 3.3 | 91.5 | 191. |
| | | | " ..... | Synchronous | | | | | |
| 2 | 13,790 | 10 | "..... | 0-600 volts..... | 0.0007 | 35.3 | 35.3 | 35.3 | 35.3 |
| 11 | 4,276 | 136 | " ..... | 601-15,000 volts..... | 0.0318 | 175. | 8.0 | 153. | 360. |
| 6 | 558 | 31 | " ..... | Direct Current..... | 0.0556 | 37.5 | 4.0 | 16.2 | 139. |
| | | | Chemical..... | Induction | | | | | |
| 6 | 9,638 | 50 | " ..... | 0-600 volts..... | 0.0052 | 22.5 | 6. | 10.3 | 45.7 |
| 8 | 2,819 | 122 | " ..... | 601-15,000 volts..... | 0.0433 | 56.3 | 3.3 | 38. | 191. |
| | | | " ..... | Synchronous | | | | | |
| 1 | 13,750 | 10 | " ..... | 0-600 volts..... | 0.0007 | 35.3 | 35.3 | 35.3 | 35.3 |
| 4 | 1,201 | 52 | " ..... | 601-15,000 volts..... | 0.0433 | 129. | 25.8 | 113. | 218. |
| | | | Petroleum..... | Induction | | | | | |
| 3 | 6,467 | 146 | " ..... | 0-600 volts..... | 0.0226 | 158. | 120. | 139. | 159. |
| 2 | 1,015 | 34 | " ..... | 601-15,000 volts..... | 0.0335 | 139. | 90. | 119. | 147. |
| | | | " ..... | Synchronous | | | | | |
| 2 | 2,826 | 78 | " ..... | 601-15,000 volts..... | 0.0276 | 207. | 167. | 210. | 254. |
| | | | Rubber & Plastics. | Induction | | | | | |
| 3 | 161 | 12 | " " | 601-15,000 volts..... | 0.0748 | 144. | 132 | 150. | 168. |
| 1 | 161 | 17 | Textile..... | Direct Current..... | 0.1056 | 9.4 | 9.4 | 9.4 | 9.4 |

Copyright © 1998 IEEE. All rights reserved.

TABLE 8 - GENERATORS

| Number of Plants in Sample Size | Sample Size Unit-Years | Number of Failures Reported | Industry | Equipment Sub Class | Failure Rate - Failures per Unit-Year | Actual Hours Downtime/Failure: Industry Average | Minimum Plant Average | Median Plant Average | Maximum Plant Average |
|---|---|---|---|---|---|---|---|---|---|
| 8 | 761.8 | 24 | All..... | Steam Turbine Driven..... | 0.032 | 165. | 1.5 | 66.5 | 1080. |
| 4 | 89.4 | 57 | "..... | Gas Turbine Driven..... | 0.638 | 23.1 | 5.0 | 92.0 | 720. |
| 4 | 59.4 | 4 | "..... | Driven by Motor, Diesel, or Gas Engine..... | 0.067 | 127. | 121. | 133. | 144. |
| 1 | 5.5 | 54 | Petroleum..... | Gas Turbine Driven..... | 9.818 | 5.0 | 5.0 | 5.0 | 5.0 |

TABLE 9 - DISCONNECT SWITCHES

| Number of Plants in Sample Size | Sample Size Unit-Years | Number of Failures Reported | Industry | Equipment Sub Class | Failure Rate - Failures per Unit-Year | Actual Hours Downtime/Failure: Industry Average | Minimum Plant Average | Median Plant Average | Maximum Plant Average |
|---|---|---|---|---|---|---|---|---|---|
| 8 | 2,065 | 6 | All..... | Open..... | 0.0029 | 183. | 3.0 | 6.0 | 1080. |
| 16 | 15,490 | 94 | " ..... | Enclosed..... | 0.0061 | 3.6 | 0.2 | 2.8 | 9.3 |
| 4 | 2,205 | 22 | Chemical..... | Enclosed..... | 0.0100 | 6.0 | 2.0 | 5.1 | 6.5 |
| 1 | 4,293 | 61 | Metal..... | Enclosed..... | 0.0142 | 2.8 | 2.8 | 2.8 | 2.8 |

TABLE 10 - SWITCHGEAR BUS: INDOOR & OUTDOOR
(Unit = Number of Connected Circuit Breakers or Instrument Transformer Compartments)

| Number of Plants in Sample Size | Sample Size Unit-Years | Number of Failures Reported | Industry | Equipment Sub Class | Failure Rate - Failures per Unit-Year | Actual Hours Downtime/Failure: Industry Average | Minimum Plant Average | Median Plant Average | Maximum Plant Average |
|---|---|---|---|---|---|---|---|---|---|
| 12 | 11,740 | 20 | All..... | Insulated; 601-15,000 volts.... | 0.00170 | 261. | 5.0 | 26.8 | 1613. |
| | | | " ..... | Bare | | | | | |
| 12 | 32,280 | 11 | " ..... | 0-600 volts..... | 0.00034 | 550. | 2.0 | 24.0 | 2520. |
| 5 | 20,560 | 13 | " ..... | Above 600 volts..... | 0.00063 | 17.3 | 6.9 | 13.0 | 48. |
| 5 | 4,003 | 15 | Chemical..... | Insulated; 601-15,000 volts. | 0.00375 | 340. | 18.0 | 26.8 | 1613. |
| | | | " ..... | Bare | | | | | |
| 3 | 17,270 | 10 | " ..... | Above 600 volts..... | 0.00058 | 19.3 | 6.9 | 42.0 | 48. |



Copyright © 1998 IEEE. All rights reserved.

TABLE 11 - BUS DUCT: INDOOR & OUTDOOR
(Unit = 1 Circuit Foot)

| Number of Plants in Sample Size | Sample Size Unit-Years | Number of Failures Reported | Industry | Equipment Sub Class | Failure Rate - Failures per Unit-Year | Actual Hours Downtime/Failure: Industry Average | Minimum Plant Average | Median Plant Average | Maximum Plant Average |
|---|---|---|---|---|---|---|---|---|---|
| 12 | 160,400 | 20 | All..... | All Voltages..... | 0.000125 | 128. | 0.5 | 9.5 | 2160. |

TABLE 12 - OPEN WIRE
(Unit = 1,000 Circuit Feet)

| Number of Plants in Sample Size | Sample Size Unit-Years | Number of Failures Reported | Industry | Equipment Sub Class | Failure Rate-Failures per Unit-Year | Actual Hours Downtime/Failure: Industry Average | Minimum Plant Average | Median Plant Average | Maximum Plant Average |
|---|---|---|---|---|---|---|---|---|---|
| 10 | 5,185 | 98 | All..... | 0-15,000 volts..... | 0.0189 | 42.5 | 1.0 | 4.0 | 3600. |
| 7 | 1,460 | 11 | " ..... | Above 15,000 volts..... | 0.0075 | 17.5 | 0.4 | 12.0 | 48. |
| 3 | 292.6 | 10 | Chemical..... | 0-15,000 volts..... | 0.0342 | 606. | 4.0 | 7.5 | 3600. |
| 1 | 2,121 | 76 | Petroleum..... | 0-15,000 volts..... | 0.0358 | 4.1 | 4.1 | 4.1 | 4.1 |

Copyright © 1998 IEEE. All rights reserved.

TABLE 13 - CABLE (ALL TYPES OF INSULATION)
(Unit = 1,000 Circuit Feet)

| Number of Plants in Sample Size | Sample Size Unit-Years | Number of Failures Reported | Industry | Equipment SUb Class | Failure Rate-Failures per Unit-Year | Actual Hours Downtime/Failure Industry Average | Mini-mum Plant Average | Median Plant Average | Maxi-mum Plant average |
|---|---|---|---|---|---|---|---|---|---|
| | | | All..... | Above Ground & Aerial | | | | | |
| 10 | 5,692 | 8 | " ..... | 0-600 volts..... | 0.00141 | 457. | 2.0 | 10.5 | 1802. |
| 18 | 5,248 | 74 | " ..... | 601-15,000 volts - All..... | 0.01410 | 40.4 | 0.2 | 6.9 | 360. |
| 7 | 1,517 | 14 | " ..... | In Trays Above Ground..... | 0.00923 | 8.9 | 6.0 | 8.0 | 12.7 |
| 6 | 183 | 9 | " ..... | In Conduit Above Ground..... | 0.04918 | 140. | 4.0 | 47.5 | 360. |
| 11 | 3,548 | 51 | " ..... | Aerial Cable..... | 0.01437 | 31.6 | 0.2 | 5.3 | 178. |
| | | | " ..... | Below Ground & Direct Burial | | | | | |
| 3 | 2,060 | 8 | " ..... | 0-600 volts..... | 0.00388 | 15.0 | 8.0 | 24.0 | 48.0 |
| 26 | 19,120 | 118 | " ..... | 601-15,000 volts - All..... | 0.00617 | 95.5 | 0.3 | 35.0 | 4320. |
| 26 | 18,940 | 116 | " ..... | In Duct or Conduit Below Ground | 0.00613 | 96.8 | 0.3 | 35.0 | 4320. |
| 1 | 2,975 | 10 | " ..... | Above 15,000 volts..... | 0.00336 | 16.0 | 16.0 | 16.0 | 16.0 |
| | | | Chemical..... | Above Ground & Aerial | | | | | |
| 7 | 1,961 | 44 | " ..... | 601-15,000 volts - All..... | 0.02244 | 35.5 | 2.0 | 4.7 | 154. |
| 3 | 1,137 | 11 | " ..... | In Trays Above Ground..... | 0.00968 | 7.8 | 6.0 | 7.0 | 8.0 |
| 5 | 737 | 28 | " ..... | Aerial Cable..... | 0.03800 | 47.1 | 2.0 | 4.7 | 178. |
| | | | " ..... | Below Ground & Direct Burial | | | | | |
| 10 | 11,420 | 70 | " ..... | 601-15,000 volts - All..... | 0.00613 | 53.0 | 2.6 | 25.0 | 514. |
| 10 | 11,420 | 70 | " ..... | In Duct or Conduit Below Ground | 0.00613 | 53.0 | 2.6 | 25.0 | 514. |
| | | | Petroleum..... | Above Ground & Aerial | | | | | |
| 2 | 2,838 | 15 | " ..... | 601-15,000 volts - All..... | 0.00529 | 21.0 | 7.7 | 27.7 | 47.6 |
| 2 | 2,669 | 12 | " ..... | Aerial Cable..... | 0.00450 | 23.1 | 7.7 | 53.8 | 100. |
| | | | " ..... | Below Ground & Direct Burial | | | | | |
| 2 | 981 | 23 | " ..... | 601-15,000 volts - All..... | 0.02345 | 94.0 | 26.8 | 69.7 | 113. |
| 2 | 981 | 23 | " ..... | In Duct or Conduit Below Ground | 0.02345 | 94.0 | 26.8 | 69.7 | 113. |
| 1 | 2,975 | 10 | " ..... | Above 15,000 volts..... | 0.00336 | 16.0 | 16.0 | 16.0 | 16.0 |



Copyright © 1998 IEEE. All rights reserved.

Copyright © 1998 IEEE. All rights reserved.

TABLE 14 - CABLE (ALL APPLICATIONS)
(Unit = 1,000 Circuit Feet)

| Number of Plants in Sample Size | Sample Size Unit-Years | Number of Failures Reported | Industry | Equipment Sub Class | Failure Rate-Failures per Unit-Year | Actual Hours Downtime/Failure: Industry Average | Minimum Plant Average | Median Plant Average | Maximum Plant Average |
|---|---|---|---|---|---|---|---|---|---|
| | | | All..... | 601-15,000 volts | | | | | |
| 9 | 9,819 | 38 | " ..... | Thermoplastic..... | 0.00387 | 44.5 | 2.0 | 10.0 | 178. |
| 15 | 5,960 | 53 | " ..... | Thermosetting..... | 0.00889 | 168. | 0.2 | 26.0 | 4320. |
| 10 | 7,126 | 65 | " ..... | Paper Insulated Lead Covered.. | 0.00912 | 48.9 | 0.3 | 26.8 | 120. |
| 8 | 1,419 | 26 | " ..... | Other..... | 0.01832 | 16.1 | 0.7 | 28.5 | 168. |
| | | | Chemical..... | 601-15,000 volts. | | | | | |
| 7 | 9,158 | 36 | " ..... | Thermoplastic..... | 0.00393 | 45.4 | 2.0 | 9.8 | 178. |
| 3 | 2,578 | 26 | " ..... | thermosetting..... | 0.01009 | 117. | 17.3 | 202. | 387. |
| 4 | 937 | 26 | " ..... | Paper Insulated Lead Covered.. | 0.02774 | 10.7 | 2.6 | 25.0 | 120. |
| 3 | 697 | 16 | " ..... | Other..... | 0.02297 | 18.3 | 8.0 | 9.0 | 168. |
| | | | Petroleum..... | 601-15,000 volts | | | | | |
| 2 | 2,520 | 15 | " ..... | Thermosetting..... | 0.00595 | 21.0 | 7.7 | 27.7 | 47.6 |
| 2 | 1,299 | 23 | " ..... | Paper Insulated Lead Covered.. | 0.01770 | 94.0 | 26.8 | 69.7 | 113. |

TABLE 15 - CABLE JOINTS (ALL TYPES OF INSULATION)

| Number of Plants in Sample Size | Sample Size Unit-Years | Number of Failures Reported | Industry | Equipment Sub Class | Failure Rate-Failures per Unit-Year | Actual Hours Downtime/Failure: Industry Average | Minimum Plant Average | Median Plant Average | Maximum Plant Average |
|---|---|---|---|---|---|---|---|---|---|
| | | | All..... | 601-15,000 volts | | | | | |
| 5 | 7,401 | 6 | " ..... | Above ground & Aerial..... | 0.000811 | 20.3 | 8.0 | 16.5 | 48.0 |
| 12 | 40,500 | 35 | " ..... | In Duct or Conduit Below Ground | 0.000864 | 36.1 | 1.0 | 31.2 | 160. |
| | | | Chemical..... | 601-15,000 volts | | | | | |
| 5 | 24,120 | 21 | " ..... | In Duct or Conduit Below Ground | 0.000871 | 17.0 | 1.0 | 8.0 | 34.4 |

TABLE 16 - CABLE JOINTS (ALL APPLICATIONS)

| Number of Plants in Sample Size | Sample Size Unit-Years | Number of Failures Reported | Industry | Equipment Sub Class | Failure Rate-Failures per Unit-Year | Actual Hours Downtime/Failure: Industry Average | Minimum Plant Average | Median Plant Average | Maximum Plant Average |
|---|---|---|---|---|---|---|---|---|---|
| | | | All..... | 601-15,000 volts | | | | | |
| 5 | 27,860 | 21 | " ..... | Thermoplastic..... | 0.000754 | 15.8 | 3.4 | 8.0 | 36.0 |
| 4 | 4,857 | 6 | " ..... | Thermosetting..... | 0.001235 | 102. | 14.0 | 60.0 | 160. |
| 5 | 13,500 | 14 | " ..... | Paper Insulated Lead Covered... | 0.001037 | 31.4 | 1.0 | 28.0 | 75.5 |
| | | | Chemical..... | 601-15,000 volts | | | | | |
| 4 | 22,900 | 20 | " ..... | Thermoplastic..... | 0.000873 | 14.8 | 3.4 | 8.0 | 34.4 |

TABLE 17 - CABLE TERMINATIONS (ALL TYPES OF INSULATION)

| Number of Plants in Sample Size | Sample Size Unit-Years | Number of Failures Reported | Industry | Equipment Sub Class | Failure Rate-Failures per Unit-Year | Actual Hours Downtime/Failure: Industry Average | Minimum Plant Average | Median Plant Average | Maximum Plant Average |
|---|---|---|---|---|---|---|---|---|---|
| | | | All..... | Above Ground & Aerial | | | | | |
| 4 | 63,120 | 8 | " ..... | 0-600 volts..... | 0.000127 | 3.8 | 0.5 | 4.0 | 5.9 |
| 13 | 39,840 | 35 | " ..... | 601-15,000 volts - All..... | 0.000879 | 198. | 1.0 | 11.1 | 728. |
| 4 | 24,010 | 8 | " ..... | In Trays Above Ground..... | 0.000333 | 8.0 | 7.0 | 9.0 | 11.0 |
| 3 | 3,920 | 5 | " ..... | In Conduit Above Ground.... | 0.001276 | 1157. | 24.0 | 732. | 1440. |
| 7 | 11,910 | 22 | " ..... | Aerial Cable..... | 0.001848 | 48.5 | 1.0 | 11.3 | 84.4 |
| | | | " ..... | In Duct or Conduit Below Ground | | | | | |
| 6 | 26,390 | 8 | " ..... | 601-15,000 volts..... | 0.000303 | 25.0 | 16.0 | 23.4 | 34.5 |
| | | | chemical..... | Above Ground & Aerial | | | | | |
| 7 | 25,790 | 21 | " ..... | 601-15,000 volts - All..... | 0.000814 | 284. | 7.0 | 11.2 | 728. |
| 4 | 1,677 | 9 | " ..... | Aerial Cable..... | 0.005367 | 14.6 | 9.0 | 13.7 | 24.0 |
| | | | Petroleum..... | Above Ground & Aerial | | | | | |
| 2 | 10,150 | 12 | " ..... | 601-15,000 volts - All..... | 0.001182 | 79.3 | 24.0 | 54.2 | 84.4 |
| 1 | 10,120 | 11 | " ..... | Aerial cable..... | 0.001087 | 84.4 | 84.4 | 84.4 | 84.4 |





Copyright © 1998 IEEE. All rights reserved.

TABLE 18 - CABLE TERMINATIONS (ALL APPLICATIONS)

| Number of Plants in Sample Size | Sample Size Unit-Years | Number of Failures Reported | Industry | Equipment Sub Class | Failure Rate-Failures per Unit-Year | Actual Hours Downtime/Failure Industry Average | Minimum Plant Average | Median Plant Average | Maximum Plant Average |
|---|---|---|---|---|---|---|---|---|---|
| | | | All..... | 601-15,000 volts | | | | | |
| 2 | 2,385 | 10 | " ..... | Thermoplastic..... | 0.004192 | 10.6 | 7.0 | 11.5 | 16.0 |
| 9 | 42,310 | 13 | " ..... | Thermosetting..... | 0.000307 | 451. | 9.3 | 11.3 | 1440. |
| 5 | 20,490 | 16 | " ..... | Paper Insulated Lead Covered. | 0.000781 | 68.8 | 16.0 | 29.2 | 82.6 |

TABLE 19 - MISCELLANEOUS

| Number of Plants in Sample Size | Sample Size Unit-Years | Number of Failures Reported | Industry | Equipment Sub Class | Failure Rate-Failures per Unit-Year | Actual Hours Downtime/Failure Industry Average | Minimum Plant Average | Median Plant Average | Maximum Plant Average |
|---|---|---|---|---|---|---|---|---|---|
| 5 | 3,164. | 6 | All..... | Fuses..... | 0.0019 | 5.5 | 1.0 | 2.0 | 24.0 |
| 3 | 30,600. | 6 | " ..... | Protective Relays..... | 0.0002 | 5.0 | 0.5 | 3.8 | 7.2 |
| 3 | 11.2 | 14 | " ..... | Inverters..... | 1.25 | 107. | 2.1 | 185. | 369. |
| 3 | 314. | 12 | " ..... | Rectifiers..... | 0.0382 | 39.0 | 32.4 | 52.2 | 72.0 |
| 2 | 5.6 | 14 | Chemical..... | Inverters..... | 2.51 | 107. | 2.1 | 185. | 369. |
| 1 | 16.8 | 10 | Petroleum..... | Rectifiers..... | 0.5970 | 32.4 | 32.4 | 32.4 | 32.4 |

Copyright © 1998 IEEE. All rights reserved.

APPENDIX A (P. 1 of 7)

USER INSTRUCTIONS FOR IEEE SURVEY FORM ON
RELIABILITY OF ELECTRIC EQUIPMENT IN INDUSTRIAL PLANTS

(SPONSORED BY THE RELIABILITY WORKING GROUP,
INDUSTRIAL PLANTS POWER SYSTEMS SUBCOMMITTEE,
INDUSTRIAL AND COMMERCIAL POWER SYSTEMS COMMITTEE)

PURPOSE This survey is intended to collect data on failures that occur in in-plant electric equipment and in public utility electric power supplies that affect operations in industrial plants. We hope that these data will determine not only accurate failure rates and repair times on major classes of equipment, but will also give an insight into the causes of these failures in such a way that remedial recommendations may be formulated to reduce failures and to improve plant performance.

MAILING INSTRUCTIONS Mail all filled-out forms to the following address.

IEEE-IGA Reliability Working Group
Care of Assistant Professor A D Patton, Dept of Electrical Engineering
Texas A&M University
College Station, Texas 77843

DATA PROCESSING These forms will be given a confidential company code, and will then be key punched on cards for processing by a digital computer along with data collected from others. The computer will prepare a suitable report on failure rates, durations, and causes of failure.

ADDITIONAL INFORMATION The reverse side of the Survey Form asks for additional information. The following information should be filled in on the reverse side of the first page of data for each plant: company name, plant name, type and location, the name, address, and phone number of the individual submitting the data and/or the individual to whom questions about the data may be directed.

In addition, space is provided for remarks or clarifying comments on the data being reported. These comments should be filled in on all data sheets, if needed to clarify data.

DEFINITIONS

A component is a piece of equipment, a line or circuit, or a section of a line or circuit, or a group of items which is viewed as an entity.

A system is a group of components connected or associated in a fixed configuration to perform a specified function of generating, transmitting, or distributing power.

A failure is defined as any trouble with a power system component that causes any of the following to occur.

(1) Partial or complete plant shutdown, or below-standard plant operation
(2) Unacceptable performance of user's equipment
(3) Operation of the electrical protective relaying or emergency operation of the plant electrical system
(4) Deenergization of any electric circuit or equipment

A failure on a public utility supply system may cause the user to have either (1) a power interruption or loss of service, or (2) a deviation from normal voltage or frequency of sufficient magnitude or duration to disrupt plant production.

A failure on an in-plant component causes a forced outage of the component, and the component thereby is unable to perform its intended function until it is repaired or replaced.

Repair time of a failed component or duration of a failure is the clock hours from the time of the occurrence of the failure to the time when the component is restored to service, either by repair of the component or by substitution with a spare component. It is not the time required to restore service to a load by putting alternate circuits into operation.

It includes time for diagnosing the trouble, locating the failed component, waiting for parts, repairing or replacing, testing, and restoring the component to service.

Revision 3-4-71



Copyright © 1998 IEEE. All rights reserved.

2

USER INSTRUCTIONS FOR IEEE SURVEY FORM ON
RELIABILITY OF ELECTRIC EQUIPMENT IN INDUSTRIAL PLANTS
(SPONSORED BY THE RELIABILITY WORKING GROUP,
INDUSTRIAL PLANTS POWER SYSTEMS SUBCOMMITTEE,
INDUSTRIAL AND COMMERCIAL POWER SYSTEMS COMMITTEE)

GENERAL INSTRUCTIONS

THE SURVEY FORM The IEEE Survey Form 1-1-70 is an input data form for a computer program. The data on these forms will be key punched onto computer cards and analyzed by the computer program.

CODED DATA The Survey Form asks for coded and uncoded data. It is necessary to refer to the instructions in filling in either. The following shows the columns on each card type that requires filling in a code.

| CARD TYPE | COLUMNS REQUIRING CODES |
|---|---|
| 1 | 1-10, 36 |
| 2 | 11-18, 33-36 |
| 3 | 25, 29, 30-53, 57, 58 |

It may happen that none of the codes shown fit the particular case being reported. For such cases, the "other" code should be used, by filling a "9" or a "99" in the space provided. "Other" means not otherwise classified. If this is done, explain on reverse side of page, referring to card type and column number.

EQUIPMENT CLASS A group of codes is used to specify an equipment class. An equipment class consists of a main code, two sub-class codes, a voltage code and a size code. These are explained in the instructions. For the example shown on the filled-out form, this code is as follows.

| CLASS | CODE | DESCRIPTION |
|---|---|---|
| Main | 20 | = transformer |
| Sub 1 | 4 | = power |
| Sub 2 | 34 | = liquid filled |
| Voltage | 2 | = 601-15,000 volts primary |
| Size | 3 | = 300-750 kVA |

The above coded equipment class covers all liquid-filled power transformers, with a primary voltage of 601-15,000 volts and rated 300-750 kVA. Any transformer in the plant that does not fit this example is a different classification and requires a different coding. Thus, a 5000 kVA power transformer, liquid filled, 13.8 kV primary voltage would be coded 20-4-34-2-5.

CARD-TYPES The Survey Form asks for three types of information under the headings CARD-TYPE 1, CARD-TYPE 2, and CARD-TYPE 3.

In general, CARD-TYPE 1 asks for data on plant identification and other general plant information.

CARD-TYPE 2 asks for data on a specific equipment class, including the total number of installed units, on their failure experience, on maintenance practices, and on estimated repair times of failed equipment. The total installed units and their failure experience is the most essential data asked for.

CARDS-TYPE 3 asks for data on each individual failure reported on a CARD-TYPE 2.

A typical plant might have as many as, say 30 different equipment classes. These 30 equipment classes might have, for example 10 different failures. To report this information requires 30 pages of the Survey Form, one for each different equipment class. CARD-TYPE 1 is filled in completely on the first page and partly thereafter. CARD-TYPE 2 is filled in on each page. CARDS-TYPE 3 are filled in 10 times, once for each failure, if any.

CARD-TYPE 1 CARD-TYPE 1 is used to identify the reporting company and plant of that company and to give general information about that plant. The first 10 columns on this card are to be repeated by the key puncher onto CARD-TYPE 2 and CARDS-TYPE 3 for identification purposes.

Only one CARD-TYPE 1 is used by the computer program. However, we ask that on each page of the IEEE Survey Form that the first 7 columns be filled-in in case the filled-out survey forms become separated.

Fill in Items 1-8 on reverse side of first page of data for each plant.

ALL CARD TYPES Fill in CARD-TYPE, column number, and remarks or comments on reverse side, if any, on all data cards.

Copyright © 1998 IEEE. All rights reserved.

APPENDIX A (P. 2 of

3

USER INSTRUCTIONS FOR IEEE SURVEY FORM ON
RELIABILITY OF ELECTRIC EQUIPMENT IN INDUSTRIAL PLANTS
(SPONSORED BY THE RELIABILITY WORKING GROUP,
INDUSTRIAL PLANTS POWER SYSTEMS SUBCOMMITTEE,
INDUSTRIAL AND COMMERCIAL POWER SYSTEMS COMMITTEE

CARD-TYPE 2 The second or CARD-TYPE 2 is used to report on each different equipment class in the plant. A typical plant might have a one type of utility supply, and several different classes each of transformers, circuit breakers, cables, etc. These different classes are shown in Columns 11-18. These Columns 11-18 are to be repeated by the key puncher on all CARDS-TYPE 3. There will be as many CARDS-TYPE 2 as there are different equipment classes.

Each CARD-TYPE 2 is used to report (1) the total number installed of one equipment class and the total number of failures experienced (if any) of that equipment class.

In addition, each CARD-TYPE 2 is used to report on maintenance practices and estimated repair times. These are your best estimate of repair times. These estimated times will be used if actual repair times are not known, or if actual repair times are much different from the average for some special reason which is unlikely to recur. We prefer to use actual data if available.

These data are to be left blank for failures on the utility power supply, since this information is not normally available.

CARD-TYPE 3 The third or CARD-TYPE 3 is used to report on actual data for each failure reported on a corresponding CARD-TYPE 2. Thus, associated with each CARD-TYPE 2 is a set of CARDS-TYPE 3. The number of CARDS-TYPE 3 will be the same as the number of failures (column 31) reported on CARDS-TYPE 2, for example, if a CARD-TYPE 2 has a 3 in Column 31, then 3 CARDS-TYPE 3 should be filled in.

Each CARD-TYPE 3 reports specific information on one failure, such as failure duration, urgency of repair, cause of failure, loads affected by the failure, and effect of failure on plant operations.

RIGHT-ADJUSTMENT OF DATA In filling in data, numbers should be right-adjusted, that is, they must end in the right-hand column of the assigned field. This means that if, for example, the survey form provides 3 columns to insert data but a two-digit number is to be inserted in the space available, then the number should be filled into the two right-hand columns.

SAMPLE FILLED-OUT FORM Refer to the attached sample filled-out form. This gives an example of a report on one class of transformers with two failures.



Copyright © 1998 IEEE. All rights reserved.

7) DATE 3 - 4 - 71 · SAMPLE IEEE SURVEY FORM 11-1-70 PAGES 15 PAGE 4

**RELIABILITY OF ELECTRIC EQUIPMENT IN INDUSTRIAL PLANTS**

**CARD – TYPE 1** (REFER TO SURVEY FORM INSTRUCTIONS) (NOTE – * REFERS TO CODED DATA)

| COMPANY CODE | PLANT* NO. | PLANT* TYPE | PLANT* LOCATION | PLANT* CLIMATE | PLANT* ATMOSPHERE | PLANT OPERATING SCHEDULE HR. PER DAY | PLANT OPERATING SCHEDULE DAYS PER WK. | ESTIMATED PLANT OUTAGE COST, $ PER FAILURE | ESTIMATED PLANT OUTAGE COST, $ PER HR. DOWNTIME | PLANT MAX. DEMAND AT PLANT DESIGN CAPACITY, KW | PLANT RESTART TIME, HOURS | CRITICAL SERVICE LOSS DURATION NO. OF UNITS | CRITICAL SERVICE LOSS DURATION UNITS* | | CARD TYPE | CARD NO. |
|---|---|---|---|---|---|---|---|---|---|---|---|---|---|---|---|---|
| 1 | 4 | 6 | 8 | 9 | 10 | 11 | 13 | 15 | 20 | 25 | 31 | 33 | 36 | | 79 | 80 |
| GEL | 1 | 1 | 0 | 1 | 1 | 5 | 5 | 40000 | 20000 | 540000 | 2 | 10 | 4 | | 1 | 1 |

**CARD – TYPE 2**

| EQUIPMENT CLASS* MAIN | SUB 1 | SUB 2 | VOLTAGE* | SIZE | PERIOD COVERED BY THIS REPORT FROM MO. | FROM YR. | TO MO. | TO YR. | NO. OF INSTALLED UNITS | NUMBER OF FAILURES | AVERAGE AGE* | MAINTENANCE NORMAL CYCLE, MO. | MAINTENANCE QUALITY | ESTIMATED CLOCK HOURS TO REPAIR A FAILURE: REPAIR FAILED COMPONENT 24-HR. PER DAY | REPAIR FAILED COMPONENT 8-HR. PER DAY | REPLACE WITH SPARE 24-HR. PER DAY | REPLACE WITH SPARE 8-HR. PER DAY | CARD TYPE | CARD NO. |
|---|---|---|---|---|---|---|---|---|---|---|---|---|---|---|---|---|---|---|---|
| 11 | 13 | 15 | 17 | 18 | 19 | 21 | 23 | 25 | 27 | 31 | 33 | 34 | 36 | 37 | 41 | 45 | 48 | 79 | 80 |
| 20 | 4 | 34 | 2 | 3 | 1 | 66 | 10 | 70 | 1210 | 2 | 3 | 3 | 2 | 1010 | 3000 | 14 | 48 | 2 | 1 |

**CARDS – TYPE 3**

| NUMBER | DATE MO. | DATE YR. | FAILURE: FOREWARNING* | DURATION NO. OF UNITS | DURATION UNITS* | REPAIR METHOD* | REPAIR URGENCY* | NO. SINCE LAST MAINTAINED* | DAMAGED PART* | TYPE* | RESPONSIBILITY* | INITIATING CAUSE* | CONTRIBUTING CAUSE* | CHARACTERISTICS* | LOADS LOST* COMPUTER | MOTOR | LIGHTING | SOLENOID | OTHER | % PRODUCTION LOST* | PLANT OUTAGE DURATION NO. OF UNITS | PLANT OUTAGE DURATION UNITS* | SERVICE RESTORED* | CARD TYPE | CARD NO. |
|---|---|---|---|---|---|---|---|---|---|---|---|---|---|---|---|---|---|---|---|---|---|---|---|---|---|
| 19 | 21 | 23 | 25 | 26 | 29 | 30 | 32 | 34 | 36 | 38 | 40 | 42 | 44 | 46 | 48 | 49 | 50 | 51 | 52 | 53 | 54 | 57 | 58 | 79 | 80 |
| 1 | 9 | 69 | | 60 | 2 | 2 | 1 | 2 | 9 | 1 | 1 | 49 | 99 | 15 | 1 | 1 | 1 | 1 | 2 | | 44 | 4 | 4 | 3 | 1 |
| 2 | 8 | 70 | | 180 | 2 | 1 | 1 | 3 | 2 | 1 | 5 | 99 | 10 | 6 | 1 | 1 | 0 | 9 | 1 | 2 | | 44 | 4 | 3 | 2 |
| 3 | | | | | | | | | | | | | | | | | | | | | | | | 3 | 3 |
| 4 | | | | | | | | | | | | | | | | | | | | | | | | 3 | 4 |
| 5 | | | | | | | | | | | | | | | | | | | | | | | | 3 | 5 |
| 6 | | | | | | | | | | | | | | | | | | | | | | | | 3 | 6 |
| 7 | | | | | | | | | | | | | | | | | | | | | | | | 3 | 7 |
| 8 | | | | | | | | | | | | | | | | | | | | | | | | 3 | 8 |
| 9 | | | | | | | | | | | | | | | | | | | | | | | | 3 | 9 |
| 10 | | | | | | | | | | | | | | | | | | | | | | | | 3 | 0 |

Copyright © 1998 IEEE. All rights reserved.

MKD

**APPENDIX A (P. 3 of 7)**

5

USER INSTRUCTIONS FOR CARD-TYPE 1

CARD - TYPE 1

(REFER TO SURVEY FORM INSTRUCTIONS)
(NOTE - * REFERS TO CODED DATA)

| COMPANY CODE | PLANT* | | | | | PLANT OPERATING SCHEDULE | | ESTIMATED PLANT OUTAGE COST, $ | | PLANT MAX. DEMAND AT PLANT DESIGN CAPACITY, KW | PLANT RESTART TIME, HOURS | CRITICAL SERVICE LOSS DURATION | | | CARD TYPE | CARD NO. |
|---|---|---|---|---|---|---|---|---|---|---|---|---|---|---|---|---|
| | NO. | TYPE | LOCATION | CLIMATE | ATMOSPHERE | HR. PER DAY | DAYS PER WK. | PER FAILURE | PER HR. DOWNTIME | | | NO. OF UNITS | UNITS* | | | |
| 1 | 4 | 6 | 8 | 9 | 10 | 11 | 13 | 15 | 20 | 25 | 31 | 33 | 35 | | 79 | 80 |
| | | | | | | | | | | | | | | | 1 | 1 |

| COLUMN | NAME | CODE | DESCRIPTION |
|---|---|---|---|
| 1 | Company Code | | Fill in on all pages a three-letter abbreviation of company name for identification of data. |
| 4 | Plant No | | Fill in on all pages a sequence number starting with "1" for Plant 1, "2" for Plant 2, etc. for identification of data. A plant may consist of one or more units at the same site. |
| 6 | Plant Type | | Fill in on all pages the plant type |
| | | 1 | Auto Industry |
| | | 2 | Cement Industry |
| | | 3 | Chemical Industry |
| | | 4 | Metal Industry |
| | | 5 | Mining Industry |
| | | 6 | Petroleum Industry |
| | | 7 | Pulp and Paper Industry |
| | | 8 | Rubber and Plastics Industry |
| | | 9 | Textile Industry |
| | | 10 | Other Light Manufacturing |
| | | 11 | Other Heavy Manufacturing |
| | | 99 | Other |
| 8 | Plant Location | 1 | USA and Canada |
| | | 2 | Foreign |
| 9 | Plant Climate (For entire plant site) | | Average of daily maximums for hottest month: |

| | Temperature | Relative Humidity (RH) | (measured at noon to 2 PM ST) |
|---|---|---|---|
| 1 | Hot (>90F) | High | (>55 RH) |
| 2 | Hot (>90F) | Moderate | ( 50-55 RH) |
| 3 | Hot (>90F) | Low | (<50 RH) |
| 4 | Moderate (80-90F) | High | (>55 RH) |
| 5 | Moderate (80-90F) | Moderate | ( 50-55 RH) |
| 6 | MOderate (80-90F) | Low | (<50 RH) |
| 7 | Low (<80F) | High | (>55 RH) |
| 8 | Low (<80F) | Moderate | (50-55 RH) |
| 9 | Low (<80F) | Low | (<50 RH) |

| | | | |
|---|---|---|---|
| 10 | Plant Atmosphere (For entire plant site) | 1 | Clean to slightly polluted air |
| | | 2 | With salt spray and corrosive chemicals |
| | | 3 | With salt spray and dust or sand |
| | | 4 | With salt spray only |
| | | 5 | With corrosive chemicals and dust or sand |
| | | 6 | With corrosive chemicals only |
| | | 7 | With dust or sand only |
| | | 8 | With conductive dust |
| | | 9 | Other |
| | Plant Operating Schedule | | |
| 11 | Hours per day | | Give hours per normal working day that plant operates |
| 13 | Days per week | | Give days per normal working week that plant operates |
| | Estimated Plant Outage Cost, Dollars | | |
| 15 | Per Failure | | Extra expense incurred because of a failure only (not including plant downtime), such as for damaged equipment, spoiled product, extra maintenance, or extra repair costs |

EB



Copyright © 1998 IEEE. All rights reserved.

6

USER INSTRUCTIONS FOR CARD-TYPE 1

CARD - TYPE 1

(REFER TO SURVEY FORM INSTRUCTIONS)
(NOTE - * REFERS TO CODED DATA)

| COMPANY CODE | PLANT* | | | | PLANT OPERATING SCHEDULE | | ESTIMATED PLANT OUTAGE COST, $ | | PLANT MAX. DEMAND AT PLANT DESIGN CAPACITY, KW | PLANT RESTART TIME, HOURS | CRITICAL SERVICE LOSS DURATION | | | CARD TYPE | CARD NO. |
|---|---|---|---|---|---|---|---|---|---|---|---|---|---|---|---|
| | NO. | TYPE | LOCATION | CLIMATE ATMOSPHERE | HR. PER DAY | DAYS PER WK. | PER FAILURE | PER HR. DOWNTIME | | | NO. OF UNITS | UNITS* | | | |
| 1 | 4 | 6 | 8 | 9 10 | 11 | 13 | 15 | 20 | 25 | 31 | 33 | 36 | | 79 | 80 |
| | | | | | | | | | | | | | | 1 | 1 |

| COLUMN | NAME | CODE | DESCRIPTION |
|---|---|---|---|
| 20 | Per hour downtime | | Value of lost production in dollars per hour of plant downtime only. This is the estimated revenues (sales price) of product not made, less expenses saved in labor, material, utilities, etc. If this varies with the duration of the plant downtime, use an average value per hour. |
| 25 | Plant maximum demand at design capacity, kW | | Give the maximum electric power demand when the plant is operating at its rated or design capacity in kilowatts. |
| 31 | Plant restart time, hours | | Give the time required to get the plant back into operation after service is restored following a failure that has caused a complete plant shutdown, hours. |
| | Critical service loss duration | | |
| 33 | No of units | | Give the maximum time in units defined in Col 36 of loss of service to the plant which will not cause a complete plant shutdown. Any power interruption of longer duration will cause a plant shutdown. In other words, give maximum length of power failure that will not stop plant production. This time is typically in the range of cycles to minutes. |
| 36 | Units | | Select code for appropriate time unit that will give accurate results. |
| | | 1 | Days |
| | | 2 | Hours |
| | | 3 | Minutes |
| | | 4 | Seconds |
| | | 5 | Cycles |

Copyright © 1998 IEEE. All rights reserved.

NRD

**APPENDIX A (P. 4 of 7)**

7

## USER INSTRUCTIONS FOR CARD-TYPE 2

**CARD - TYPE 2**

| EQUIPMENT CLASS* | | | | | PERIOD COVERED BY THIS REPORT | | | | NO. OF INSTALLED UNITS | NUMBER OF FAILURES | AVERAGE AGE* | MAINT. + TEMANCE | | ESTIMATED CLOCK HOURS TO REPAIR A FAILURE | | | | CARD TYPE | CARD NO. |
|---|---|---|---|---|---|---|---|---|---|---|---|---|---|---|---|---|---|---|---|
| | | | | | FROM | | TO | | | | | | | REPAIR FAILED COMPONENT | | REPLACE WITH SPARE | | | |
| MAIN | SUB 1 | SUB 2 | VOLTAGE | SIZE | MO. | YR. | MO. | YR. | | | | NORMAL | CYCLIC MO. | 24-HR. PER DAY | 8-HR. PER DAY | 24-HR. PER DAY | 8-HR. PER DAY | | |
| 11 | 13 | 14 | 17 | 18 | 19 | 21 | 23 | 25 | 27 | 31 | 33 | 34 | 36 | 37 | 41 | 45 | 49 | 79 | 80 |
| | | | | | | | | | | | | | | | | | | 2 | 1 |

| COLUMN | NAME | CODE | DESCRIPTION |
|---|---|---|---|
| | | | Select appropriate code for Column 11-18 |
| 11 | Main Class | 10 | Utility power supplies to plant |
| | | 20 | Transformers |
| | | 30 | Circuit Breakers |
| | | 40 | Cable (Excluding joints and terminations) |
| | | 41 | Cable Joints |
| | | 42 | Cable Terminations |
| | | 43 | Cable Duct or Busway |
| | | 44 | Open Wire |
| | | 45 | Busduct |
| | | 46 | Switchgear Bus -insulated |
| | | 47 | Switchgear Bus -bare |
| | | 50 | Motors |
| | | 60 | Generators |
| | | 70 | Motor Starters |
| | | 80 | Disconnect Switches |
| | | 90 | Miscellaneous |
| | | 99 | Other |
| 13 | Sub Class 1 | | For 10-Utility Power Supplies (A redundant supply will carry the plant load, if the normal circuit is out of service) |
| | | 1 | Single Circuit (No redundant supply) |
| | | 2 | Double Circuit (One redundant supply) |
| | | 3 | Three or more circuits (two or more redundant supplies) |
| | | | For 20 - Transformers |
| | | 4 | Power |
| | | 5 | Other |
| | | | For 30-Circuit Breakers |
| | | 6 | Metal Clad, drawout |
| | | 7 | Fixed Type (includes molded case type) |
| | | | For 40-47 Cable or Bus |
| | | 9 | Cable in Trays - aboveground |
| | | 10 | Cable in Conduit -aboveground |
| | | 11 | Aerial Cable |
| | | 12 | Direct Buried Cable |
| | | 13 | Cable in Duct or Conduit -belowground |
| | | 14 | Bus or Busduct -indoor |
| | | 15 | Bus or Busduct -outdoor |
| | | | For 50 - Motors |
| | | 16 | Induction, ac |
| | | 17 | Synchronous, ac |
| | | 18 | Direct-current |
| | | | For 60 - Generators |
| | | 19 | Steam Turbine Driven |
| | | 20 | Gas Turbine Driven |
| | | 21 | Diesel or Gas Engine Driven |
| | | 22 | Motor-driven |
| | | | For 70 - Motor Starters |
| | | 23 | Contactor Type |
| | | 24 | Circuit Breaker |



Copyright © 1998 IEEE. All rights reserved.

MMD

USER INSTRUCTIONS FOR CARD-TYPE 2

CARD - TYPE 2

| EQUIPMENT CLASS* | | | | | PERIOD COVERED BY THIS REPORT | | | | NO. OF INSTALLED UNITS | NUMBER OF FAILURES | AVERAGE ARR* | MAINTENANCE | | ESTIMATED CLOCK HOURS TO REPAIR A FAILURE | | | | CARD TYPE | CARD NO. |
|---|---|---|---|---|---|---|---|---|---|---|---|---|---|---|---|---|---|---|---|
| | | | | | FROM | | TO | | | | | NORMAL CYCLE, HR. | MONTHLY | REPAIR FAILED COMPONENT | | REPLACE WITH SPARE | | | |
| MAIN | SUB 1 | SUB 2 | VOLTAGE | SIZE | MO. | YR. | MO. | YR. | | | | | | SAMP. PER DAY | S-MO. PER DAY | SAMP. PER DAY | S-MO. PER DAY | | |
| 11 | 13 | 15 | 17 | 19 | 19 | 21 | 23 | 25 | 27 | 31 | 33 | 34 | 36 | 37 | 41 | 45 | 49 | 79 | 80 |
| | | | | | | | | | | | | | | | | | | 2 | 1 |

| COLUMN | NAME | CODE | DESCRIPTION |
|---|---|---|---|
| 13 | Sub Class 1 (Cont) | | For 80 - Disconnect Switches |
| | | 25 | Open |
| | | 26 | Enclosed |
| | | | For 90 - Miscellaneous |
| | | 27 | Fuses |
| | | 28 | Protective relays |
| | | 29 | Batteries |
| | | 30 | Inverters |
| | | 31 | Rectifiers |
| | | 99 | Other |
| 15 | Sub Class 2 | | For 10-Utility Supplies<br>When service is lost because of a loss of one circuit of a redundant supply service is restored |
| | | 1 | Automatically |
| | | 2 | By remote control |
| | | 3 | Manually |
| | | | For 20 - Transformers |
| | | 34 | Liquid Filled |
| | | 35 | Dry Type |
| | | 38 | Rectifier |
| | | | For 40-51 Cable<br>Type of Insulation |
| | | 40 | Thermoplastic (PVC) |
| | | 41 | Thermoplastic (Polyethylene) |
| | | 42 | Thermosetting (SBR (Buna S) Rubber) |
| | | 43 | Thermosetting (Butyl Rubber) |
| | | 44 | Thermosetting (Oil Based Rubber) |
| | | 45 | Thermosetting (Cross-Linked Polyethylene) |
| | | 46 | Thermosetting (Silicone Rubber) |
| | | 47 | Thermosetting (Ethylene Propylene) |
| | | 48 | Thermosetting (Chlorosulphated Propylene) |
| | | 49 | Paper-Insulated Lead Covered |
| | | 50 | Varnished Cambric Insulated-Lead Covered |
| | | 51 | Mineral-Insulated |
| | | 99 | Other (Applies to Col 13-15, all classes, if not otherwise classified) |
| 17 | Volt Class | 1 | 0-600 volt (Note: For transformers this is primary voltage) |
| | | 2 | 601-15,000 volt |
| | | 3 | Above 15,000 volt |

Copyright © 1998 IEEE. All rights reserved.

MND

**APPENDIX A (P. 5 of 7)**

9

USER INSTRUCTION FOR CARD-TYPE 2

CARD - TYPE 2

| EQUIPMENT CLASS* | | | | | PERIOD COVERED BY THIS REPORT | | | | NO. OF INSTALLED UNITS | NUMBER OF FAILURES | AVERAGE AGE* | MAINT. TENANCE | | ESTIMATED CLOCK HOURS TO REPAIR A FAILURE | | | | CARD TYPE | CARD NO. |
|---|---|---|---|---|---|---|---|---|---|---|---|---|---|---|---|---|---|---|---|
| | | | | | FROM | | TO | | | | | | | REPAIR FAILED COMPONENT | | REPLACE WITH SPARE | | | |
| MAIN | SUB 1 | SUB 2 | VOLTAGE | SIZE | MO. | YR. | MO. | YR. | | | | NORMAL CYCLE, MO. | QUALITY | 24-HR. PER DAY | 8-HR. PER DAY | 24-HR. PER DAY | 8-HR. PER DAY | | |
| 11 | 13 | 15 | 17 | 18 | 19 | 21 | 23 | 25 | 27 | 31 | 33 | 34 | 36 | 37 | 41 | 45 | 49 | 79 | 80 |
| | | | | | | | | | | | | | | | | | | 2 | 1 |

| COLUMN | NAME | CODE | DESCRIPTION |
|---|---|---|---|
| 18 | Size Class | | For Main Class 10 - Utility Supplies<br>For Main Class 30 - Circuit Breakers<br>For Main Class 80 - Disc Switches<br>For Main Class 90 - Miscellaneous, Fuses |
| | | 1 | 100-600 amperes |
| | | 2 | Above 600 amperes |
| | | | For Main Class 20 - Transformers |
| | | 3 | 300-750 kVA |
| | | 4 | 751-2499 kVA |
| | | 5 | 2500-up kVA |
| | | | For Main Class 40-45 - Cable, etc |
| | | 6 | Above No 1 AWG |
| | | | For Main Class 50 - Motors |
| | | | For Main Class 70 - Motor Starters |
| | | 7 | 50-1500 horsepower |
| | | 8 | Above 1500 horsepower |
| | | | For Main Class 60 - Generators |
| | | 9 | 500-up kW |
| | Period covered by this report | | Give month and year (numerals) for period for which failure data is available |
| 19 | From: Mo | | Starting Month (Try to include data from date of installation) |
| 21 | From: Yr | | Starting Year |
| 23 | To: Mo | | Ending Month (Try to include data to date of this report) |
| 25 | To: Yr | | Ending Year |
| 27 | No of installed units | | Give total number of units installed. For cable or open wire, give length of circuit or run in M ft. For cable duct or busduct, give circuit length in feet. For switchgear bus, give the number of connected circuit breakers or instrument transformer compartments. For utility power supplies, give the number of separate supplies. |
| 31 | No of Failures | | Give total number of failures that occurred during period of report. If more than 10 use additional page. |
| 33 | Average Age | | Select codes for Column 30-53 |
| | | 1 | Less than 1 year old |
| | | 2 | 1-10 years old |
| | | 3 | More than 10 years old |
| | Maintenance | | Give normal cycle for preventive maintenance - (even if a failure has |
| 34 | Normal Cycle, Mo | 1 | Less than 12 months not occurred) |
| | | 2 | 12-24 months |
| | | 3 | More than 24 months |
| | | 4 | No preventive maintenance |
| 36 | Maintenance Quality | | Your estimate of quality of preventive maintenance is - |
| | | 1 | Excellent (by own forces) |
| | | 2 | Fair (by own forces) |
| | | 3 | Poor, inadequate (by own forces) |
| | | 4 | None |
| | | 5 | Excellent (by contracted forces) |
| | | 6 | Fair (by contracted forces) |
| | | 7 | Poor inadequate (by contracted forces) |



Copyright © 1998 IEEE. All rights reserved.

WHD

10

USER INSTRUCTIONS FOR CARD-TYPE 2

CARD - TYPE 2

| EQUIPMENT CLASS* | | | | | PERIOD COVERED BY THIS REPORT | | | | NO. OF INSTALLED UNITS | NUMBER OF FAILURES | AVERAGE AGE* | MAINTENANCE | | ESTIMATED CLOCK HOURS TO REPAIR A FAILURE | | | | CARD TYPE | CARD NO. |
|---|---|---|---|---|---|---|---|---|---|---|---|---|---|---|---|---|---|---|---|
| | | | | | FROM | | TO | | | | | | | REPAIR FAILED COMPONENT | | REPLACE WITH SPARE | | | |
| MAIN | SUB 1 | SUB 2 | VOLTAGE | SIZE | MO. | YR. | MO. | YR. | | | | NORMAL CYCLE, NO. | QUALITY | 24-HR. PER DAY | 8-HR. PER DAY | 24-HR. PER DAY | 8-HR. PER DAY | | |
| 11 | 13 | 15 | 17 | 18 | 19 | 21 | 23 | 25 | 27 | 31 | 33 | 34 | 36 | 37 | 41 | 45 | 48 | 79 | 80 |
| | | | | | | | | | | | | | | | | | | 2 | 1 |

| COLUMN | NAME | CODE | DESCRIPTION |
|---|---|---|---|
| | Estimated clock hours | | Repair time (see definitions) Fill in the clock time for diagnosing the trouble, locating the failed component, waiting for parts repairing or replacing, testing and restoring the component to service. This is your estimate of the average repair time. Please note that actual repair times are requested in CARD-TYPE 3, Col 26. Explain on reverse side how work is done if by other than own forces. |
| | Repair failed component | | With repair of failed equipment |
| 37 | 24-hr per day | | On round-the-clock emergency basis |
| 41 | 8-hr per day | | On basis of repair during normal work day |
| | | | With replacement of failed equipment with a spare by removal of failed equipment and substitution of spare equipment |
| | Repair with spare | | |
| 45 | 24-hr per day | | On round-the-clock emergency basis |
| 48 | 8-hr per day | | On basis of repair during normal work day |

Copyright © 1998 IEEE. All rights reserved.

**APPENDIX A (P. 6 of 7)**

11

## USER INSTRUCTIONS FOR CARD-TYPE 3

CARDS - TYPE 3

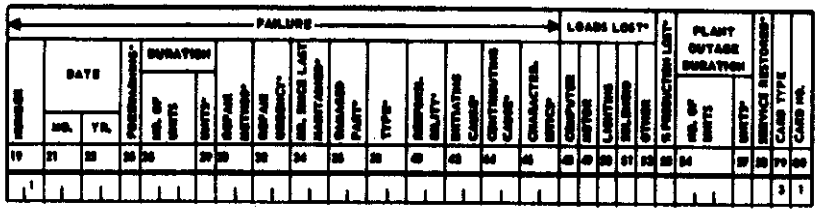


| COLUMN | NAME | CODE | DESCRIPTION |
|---|---|---|---|
| 19 | Failure No | | Fill in one card (line) for each failure. The last failure number in Col 19 should correspond with the total failures reported in Col 31 of CARD-TYPE 2. If that number was "0" then no TYPE 3 cards should be filled in. |
| | Failure Date | | |
| 21 | Mo | | Fill in month failure occured (numeral) |
| 23 | Yr | | Fill in year failure occurred (numeral) |
| 25 | Failure Forewarning | | For public utility power interruption only |
| | | 1 | If no forewarning was given |
| | | 2 | If forewarning was given |
| | | | For other types of failure, leave blank |
| | Failure Duration | | Fill in duration of failure from its initiation until (1) service is restored to normal, if a power interruption, or (2) the affected component or its replacement once again becomes available to perform its intended function. |
| 26 | No of Units | | Fill in the number of time units selected in Col 29. |
| 29 | Units | | Select code for appropriate time unit that will give accurate results. For most cases select hours as unit. |
| | | 1 | Days |
| | | 2 | Hours |
| | | 3 | Minutes |
| | | 4 | Seconds |
| | | 5 | Cycles |
| | | | Select code for Col 30-44 (Leave blank for utility failures) |
| 30 | Failure Repair Method | 1 | Repair of failed component in place or sent out for repair |
| | | 2 | Repair by replacement of failed component with spare |
| 32 | Failure Repair Urgency | 1 | Requiring round-the-clock all out efforts |
| | | 2 | Requiring repair work only during regular workday, perhaps with some overtime. |
| | | 3 | Requiring repair work on a non-priority basis. |
| 34 | Failure, months since maintained | | Failed component last had preventive maintenance - |
| | | 1 | Less than 12 months ago |
| | | 2 | 12-24 months ago |
| | | 3 | Over 24 months ago |
| | | 4 | No preventive maintenance |
| 36 | Failure, Damaged Part | 1 | Insulation - winding |
| | | 2 | Insulation - bushing |
| | | 3 | Insulation - other |
| | | 4 | Mechanical - bearings |
| | | 5 | Mechanical - other moving parts |
| | | 6 | Mechanical - other |
| | | 7 | Other electrical - auxiliary device |
| | | 8 | Other electrical - protective device |
| | | 9 | Tap changer - no load type |
| | | 10 | Tap changer - load type |
| | | 99 | Other |



Copyright © 1998 IEEE. All rights reserved.

12

USER INSTRUCTIONS FOR CARD-TYPE 3

CARDS - TYPE 3

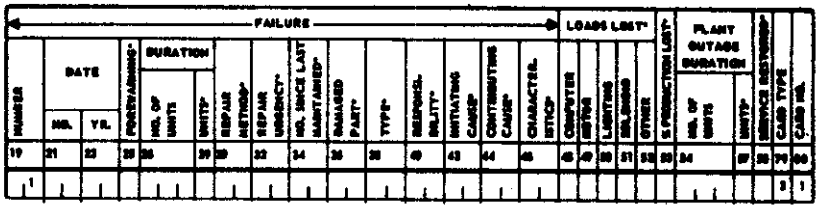


| COLUMN | NAME | CODE | DESCRIPTION |
|---|---|---|---|
| 38 | Failure Type | 1 | Flashover or arcing involving ground |
| | | 2 | All other flashover or arcing |
| | | 3 | Other electrical defect |
| | | 4 | Mechanical defect |
| | | 99 | Other |
| | | | Your best estimate of suspected responsibility |
| 40 | Failure Responsibility | 1 | Manufacturer-defective Component |
| | | 2 | Transportation to Site - defective handling |
| | | 3 | Application Engineering - improper application |
| | | 4 | Inadequate installation and testing prior to startup |
| | | 5 | Inadequate maintenance |
| | | 6 | Inadequate operating procedures |
| | | 7 | Outside agency -personnel |
| | | 8 | Outside agency -other |
| | | 99 | Other |
| 42 | Failure Initiating Cause | | Insulation breakdown caused by |
| | | 1 | Transient overvoltage disturbance (lightning, switching surges, arcing ground fault in ungrounded system) |
| | | 2 | Overvoltage |
| | | 3 | Overheating |
| | | 4 | Other insulation breakdown |
| | | 21 | Mechanical breaking, cracking, loosening, abrading, or deforming of static or structural parts |
| | | 22 | Mechanical burnout, friction, or seizing of moving parts |
| | | 23 | Mechanically caused damage from foreign source (digging, vehicular accident, etc) |
| | | 41 | Shorting by tools or metal objects |
| | | 42 | Shorting by birds, snakes, rodents, etc |
| | | 51 | Loss of control power |
| | | 52 | Malfunction of protective relay control device, or auxiliary device |
| | | 61 | Low voltage |
| | | 62 | Low frequency |
| | | 99 | Other |
| 44 | Failure Contributing Cause | 1 | Persistent overloading |
| | | 2 | Above-normal temperatures |
| | | 3 | Below-normal temperature |
| | | 4 | Exposure to agressive chemicals or solvents |
| | | 5 | Exposure to abnormal moisture or water |
| | | 6 | Exposure to non-electrical fire or burning |
| | | 8 | Obstruction of ventilation by foreign object or material |
| | | 9 | Normal deterioration from age |
| | | 10 | Severe wind, rain, snow, sleet, or other weather conditions |
| | | 11 | Protective relay improperly set |
| | | 12 | Loss or deficiency of lubricant |
| | | 13 | Loss or deficiency of oil or cooling medium |
| | | 14 | Misoperation or testing error |
| | | 15 | Exposure to dust or other contaminents |
| | | 99 | Other |

Copyright © 1998 IEEE. All rights reserved.

WHD

**APPENDIX A (P. 7 of 7)**

13
USER INSTRUCTIONS FOR CARD-TYPE 3

CARDS - TYPE 3

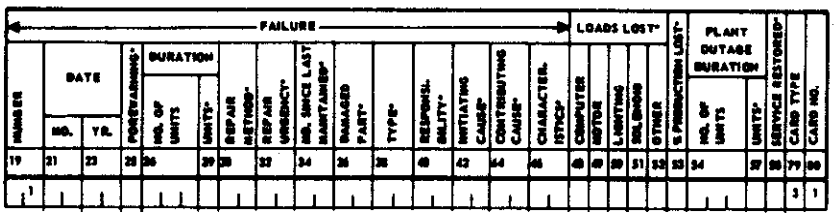


| COLUMN | NAME | CODE | DESCRIPTION |
|---|---|---|---|
| 46 | Failure Characteristic | | Utility Power Supplies (Select code) |
| | | 1 | Failure of single circuit (No redundant supply) |
| | | 2 | Failure of one circuit of a double-circuit redundant supply |
| | | 3 | Failure of both circuits of a double-circuit redundant supply |
| | | 4 | Failure of all circuits of a three or more circuit redundant supply |
| | | 5 | Partial failure of a three or more circuit redundant supply |
| | | | Transformers (Select code) |
| | | 6 | Automatic removal by protective equipment |
| | | 7 | Partial failure reducing capacity |
| | | 8 | Manual removal |
| | | | Circuit Breakers (Select code) |
| | | 9 | Failed to close when it should |
| | | 10 | Failed while opening |
| | | 11 | Opened when it shouldn't |
| | | 12 | Damaged while successfully opening |
| | | 13 | Damaged while closing |
| | | 14 | Failed while operating (not while opening or closing) |
| | | | General (Select code for any other class) |
| | | 15 | Failed (this applies to all classes) |
| | | 16 | Failed during testing or maintenance |
| | | 17 | Damage discovered during testing or maintenance |
| | | 20 | Partial failure |
| | | 99 | Other |
| | Loads Lost | | What loads were lost because of failure (1=yes, 0=no, 9= not known) even though power is restored promptly |
| 48 | Computer | | One or more computers or solid-state control devices operated incorrectly |
| 49 | Motor | | One or more motors (contactor dropout) |
| 50 | Lighting | | Lighting load |
| 51 | Solenoid | | One or more solenoid -operated devices dropped out, such as a solenoid-operated fuel valve |
| 52 | Other | | Lost other loads, describe in remarks |
| 53 | Percent Production Lost | 0 | None |
| | | 1 | 0-30 percent |
| | | 2 | Above 30 percent |



Copyright © 1998 IEEE. All rights reserved.

WHD

14

USER INSTRUCTIONS FOR CARD-TYPE 3

CARDS - TYPE 3

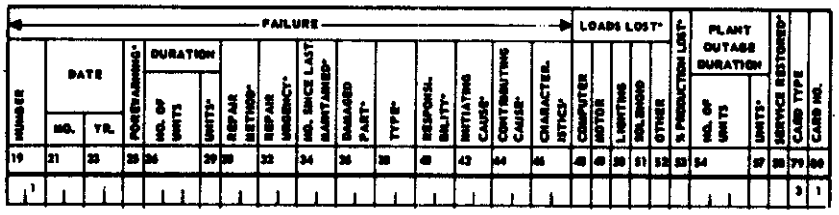


| COLUMN | NAME | CODE | DESCRIPTION |
|---|---|---|---|
| 54 | No of Units | | Fill in number of time units selected in Col 57 |
| 57 | Units | | Select code for appropriate time unit that will give accurate results. For most cases select hours as unit. |
| | | 1 | Days |
| | | 2 | Hours |
| | | 3 | Minutes |
| | | 4 | Seconds |
| | | 5 | Cycles |
| 58 | Service restored | | Give method of restoring service to plant |
| | | 1 | Primary selection -manual |
| | | 2 | Primary selection -automatic |
| | | 3 | Secondary selection -manual |
| | | 4 | Secondary selection -automatic |
| | | 5 | Network protector operation -automatic |
| | | 6 | Repair of failed componenet |
| | | 7 | Replacement of failed component with spare |
| | | 8 | Utility restored service |
| | | 9 | Other -explain in remarks |

Copyright © 1998 IEEE. All rights reserved.

## Discussion

### *Motors*

The data in Tables 7 and 2 show that synchronous motors, 0–600 V, have a failure rate approximately 15 times lower than induction motors, 0–600 V. It is believed that the failure 0.0007 per year for synchronous motors, 0–600 V, is much too low and is in error. It is believed that synchronous and induction motors, 0–600 V, should have failure rates that are nearly the same.

### *Generators*

The data in Tables 8 and 2 show that steam turbine driven generators have a failure rate almost 20 times lower than gas turbine driven generators. It is believed that the failure rate of 0.032 per year for steam turbine driven generators is too low; the failure rate should probably be several times higher than this value. The gas turbine data in Table 8 show that one plant in the petroleum industry had 54 failures in 5.5 unit-years; this compares with 3 failures in 83.9 unit-years for the other three plants that submitted data in the survey. It is believed that the overall failure rate of 0.638 per year for gas turbines is too high.

### *Open Wire*

A clear definition was not given for "open wire" on the survey form (see Appendix A). It is believed that all of the respondents interpreted "open wire" to mean "bare or weatherproof conductors supported on insulators."

### *Cable*

The data in Tables 13 and 2 show that cable above ground and aerial has a failure rate for 0–600 V that is ten times lower than 601–15 000 V. It is believed that the failure rate of 0.00141 per unit-year for 0–600 V above ground and aerial is too low.

There is a wide variation in the failure rate for cable, 601–15 000 V, based upon the application (in trays above ground, in conduit above ground, aerial cable, in duct or conduit below ground). This variation covers a range of 8 to 1. It is believed that the failure rate of 0.04918 per year is too high for cable, 601–15 000 V, in conduit above ground.

There is a wide variation in the cable failure rate shown in Table 14 (and Table 2) for the different types of insulation (601–15 000 V, all applications). These failure rates vary over a range of 5 to 1. The very low failure rate data for thermoplastic insulation and the high failure rate data for other insulation came primarily from the chemical industry.

### *Switchgear Bus*

The failure rate in Table 10 (and Table 2) shows that insulated bus, 601–15 000 V, has a failure rate about three times higher than bare bus, above 600 V. It is believed that this is the opposite of what it should be. The data submitted by the chemical industry has caused this distortion; they had a very high failure rate for insulated bus (601–15 000 V) and a low failure rate for bare bus (above 600 V).

### *Electric Utility Power Supplies*

The data for electric utility power supplies are shown in Tables 3 and 2. The failure rate is about the same for a single circuit and a double or triple circuit. This is evidently due to the predominance of the throwover mode of operation of multiple-circuit supplies. However, the actual downtime per failure is about three to nine times higher for a single circuit than for a double or triple circuit; the downtime depends on whether manual switchover or automatic switchover is used on a multiple-circuit system.

It appears that many respondents misinterpreted the "number of installed units" for double- or triple-circuit electric utility power supplies. What was desired was the number of separate and independent points of supply, but this was often interpreted to be the number of circuits in the utility supply system. Thus the tendency was to report two installed units for double-circuit supplies. It is believed that this error was made in almost every case. Therefore, *the Reliability Subcommittee changed the number of installed units for multiple-circuit utility supplies to 1 except in those cases where other evidence indicated the presence of more than one point of supply.* The sample size shown in Tables 3 and 2 reflects this change for double- or triple-circuit electric utility power supplies. Thus a double- or triple-circuit supply for one year is counted as one unit-year.

It also appears that a few respondents incorrectly interpreted failure duration on card type 3 for multiple-circuit electric utility supplies. What was desired was the period of time during which service was interrupted. However, in a few cases it appears that what was given was the time to repair one circuit of a multiple-circuit supply even though the supply interruption time is limited to the time required to throw over to the alternate supply circuit. The *Reliability Subcommittee changed the failure duration to the value given for plant outage duration in those cases in which such an error was believed to exist.* However, it is suspected that not all of these errors were corrected. The effect of this change was to reduce the actual hours of downtime per failure for multiple-circuit supplies. The majority of the multiple-circuit supply failures are due to loss of the normal feed, and the duration of the failure is limited to the time to switch to the alternate feed. The average outage duration in Tables 3 and 2 is shorter for automatic switching than for manual switching, as one would expect.

There were 25 recorded cases of simultaneous failure of all circuits in a double- or triple-circuit supply. This gives a failure rate of 0.119 failure per year for loss of all circuits at one time. Further details on this are given in Part 3 [13]. Thus a multiple-circuit electric utility power supply has a failure rate (loss of all circuits at one time) that is only about five times lower than the failure rate (0.537 failures per year) for a single-circuit supply and about six times lower than the all-inclusive failure rate of 0.643 failure per year. The ratio between all-inclusive failure rate and the failure rate for loss of all circuits at one time is not as large as one might suspect. Some of the reasons for this are the following.

1) Some portion of utility supply failures are due to failure of the bulk power system which feeds all the supply circuits.

2) At least some cases of loss of all circuits at one time occur when a forced outage of one circuit overlaps a scheduled or maintenance outage of the other circuit (typical utility industry data indicate that this type of overlapping outage is often more probable than overlapping forced outages).

3) The all-inclusive failure rate is, in effect, an average outage rate reflecting the performance of some throwover schemes and some normally closed breaker schemes. Thus, since throw-



Copyright © 1998 IEEE. All rights reserved.

over schemes are expected to have higher outage rates than normally closed breaker schemes, it follows that the computed all-inclusive outage rate is probably somewhat lower than the outage rate which would be computed for throwover schemes only. (Unfortunately we cannot compute the throwover scheme outage rate since we do not know which of the reported utility supplies are throwover schemes.)

Only point 3) reflects on the accuracy of the data; the other two points just reflect the facts of life.

A comparison of the all-inclusive failure rate (0.643 failures per year) with the failure rate for loss of all circuits at one time (0.119 failures per year) gives a rough idea of the degree of supply failure rate improvement possible by going from a throwover scheme to a scheme using normally closed circuit breakers.

## REFERENCES

[1] W. H. Dickinson, P. E. Gannon, C. R. Heising, A. D. Patton, and D. W. McWilliams, "Fundamentals of reliability techniques as applied to industrial power systems," in *Conf. Rec. 1971 IEEE Ind. Comm. Power Syst. Tech. Conf.* 71C18-IGA, pp. 10–31.

[2] C. R. Heising, "Reliability and availability comparison of common low-voltage industrial power distribution systems," *IEEE Trans. Ind. Gen. Appl.*, vol. IGA-6, pp. 416–424, Sept./Oct. 1970.

[3] W. H. Dickinson, "Economic evaluation of industrial power system reliability," *AIEE Trans. (Appl. Ind.)*, vol. 76, pp. 264–271, Nov. 1957.

[4] W. H. Dickinson, "Evaluation of alternative power distribution systems for refinery process units," *AIEE Trans. (Power Appl. Syst.)*, vol. 79, Apr. 1960.

[5] W. H. Dickinson, "Economic justification of petroleum industry automation and other alternatives by the revenue requirements method," *IEEE Trans. Ind. Gen. Appl.*, vol. IGA-1, pp. 39–50, Jan./Feb. 1965.

[6] D. P. Garver, F. E. Montmeat, and A. D. Patton, "Power systems reliability I–Measures of reliability and methods of calculation," *IEEE Trans. Power Appl Sys.*, vol. 83, pp. 727–737, July 1964.

[7] F. E. Montmeat, A. D. Patton, J. Zemkoski, and D. J. Cummin, "Power system reliability II–Applications and a computer program," *ibid.*, vol. PAS-84, pp. 636–643, July 1965.

[8] Z. G. Todd, "A probability method for transmission and distribution outage calculations," *IEEE Trans. Power App. Syst.*, vol. 83, pp. 695–701, July 1964.

[9] C. F. DeSieno, and L. L. Stine, "A probability method for determining the reliability of electric power systems," *IEEE Trans. Power App. Syst.*, vol. 83, pp. 174–181, Feb. 1964.

[10] "General principles for reliability analysis of nuclear power generating station protection systems," IEEE Publ. 352, ANSI N41.4, 1972.

[11] W. H. Dickinson, "Report on reliability of electric equipment in industrial plants," *AIEE Trans. (Appl. Ind.)*, vol. 81, pp. 132–151, July 1962.

[12] IEEE Committee Report, "Report on reliability survey of industrial plants, Part II: Cost of power outages, plant restart time, critical service loss duration time, and type of loads lost versus time of power outages," this issue, pp. 236–241.

[13] IEEE Committee Report, "Report on reliability survey of industrial plants; Part III: Causes and types of failures of electrical equipment, methods of repair, and urgency of repair," this issue, pp. 242–249.

[14] N. H. Roberts, *Mathematical Methods in Reliability Engineering.* New York: McGraw-Hill, 1964.

[15] I. Bazovsky, *Reliability Theory and Practice*. Englewood Cliffs, N.J.: Prentice-Hall, 1961.

[16] D. K. Lloyd and M. Lipow, *Reliability: Management, Methods, and Mathematics.* Englewood Cliffs, N.J.: Prentice-Hall, 1962.

[17] A. D. Patton, "Determination and analysis of data for reliability studies," *IEEE Trans. Power App. Syst.*, vol. PAS-87, pp. 84–100, Jan. 1968.

Copyright © 1998 IEEE. All rights reserved.

# Report on Reliability Survey of Industrial Plants, Part II: Cost of Power Outages, Plant Restart Time, Critical Service Loss Duration Time, and Type of Loads Lost Versus Time of Power Outages

IEEE COMMITTEE REPORT

*Abstract*—An IEEE sponsored reliability survey of industrial plants was completed during 1972. This survey included the cost of power outages, plant restart time, critical service loss duration time, and type of loads lost versus power outage duration time. Survey results reflect data from 30 companies covering 68 plants in nine industries in the United States and Canada. This information is useful in the design of industrial power distribution systems.

## Introduction

KNOWLEDGE of the cost of power outages and of plant restart time is important information for use in the design of industrial power distribution systems. In addition it is also desirable to know the critical service loss duration time and the type of loads lost versus the time of power outage.

During 1972 the Reliability Subcommittee of the IEEE Industrial and Commercial Power Systems Committee completed a reliability survey of industrial plants. This is the second part, which reports results from the survey. Included in this paper are the following results:

1) cost of power outages to industrial plants in the United States and Canada (dollars per kilowatt interrupted plus dollars per kilowatthour of undelivered energy);
2) plant restart time after a failure that has caused complete plant shutdown;
3) critical service loss duration time, that is, the maximum length of power failure that will not stop plant production;
4) type of loads lost versus the time of power outage (this includes computer, motor, lighting, and solenoid loads, and gives plant outage duration times resulting from these failures).

Paper TOD-73-158, approved by the Industrial and Commercial Power Systems Committee of the IEEE Industry Applications Society for presentation at the 1973 Industrial and Commercial Power Systems Technical Conference, Atlanta, Ga., May 13-16. Manuscript released for publication November 5, 1973.

Members of the Reliability Subcommittee of the IEEE Industrial and Commercial Power Systems Committee are W. H. Dickinson, *Chairman*, P. E. Gannon, M. D. Harris, C. R. Heising, D. W. McWilliams, R. W. Parision, A. D. Patton, and W. J. Pearce.

## Survey Form

The survey form used is shown in Appendix A of Part I [1]. The information on the cost of power outages came from card type 1, columns 13, 20, and 25. Card type 1 also contained plant restart time (column 31) and critical service loss duration (columns 33 and 36).

The data on type of loads lost came from card type 3, columns 48, 49, 50, 51, and 52. The data on time of power outage came from columns 26 and 29 of card type 3; these data are actually the outage duration time after a failure of the electric utility power supply or a failure of electrical equipment in the power distribution system.

## Response to Survey

A total of 30 companies responded to the survey questionnaire reporting data on 68 plants from nine industries in the United States and Canada. Every response did not supply all the information requested on every question. Tables 22-29



Copyright © 1998 IEEE. All rights reserved.

give data on how many plants provided answers to the various questions.

### Statistical Analysis

The results were compiled for the United States and Canada. Data from one foreign plant are also included separately.

### Survey Results

*Cost of Power Outages*

Each plant was asked to report data on the cost of power outages as follows:

1) Dollars per failure, i.e., extra expense incurred because of a failure only (not including plant downtime) such as for damaged equipment, spoiled product, extra maintenance, or extra repair costs.

2) Dollars per hour of downtime, i.e., value of lost production in dollars per hour of plant downtime only. This is the estimated revenues (sales price) of product not made, less expenses saved in labor, material, utilities, etc. If this varies with the duration of the plant downtime, an average value per hour was to be given.

3) Maximum electric power demand when the plant is operating at its rated or design capacity in kilowatts.

This made it possible to calculate an estimate of the cost of power outages in terms of the dollars per kilowatts interrupted plus the dollars per kilowatthours of undelivered energy. The average cost of power outages from the survey is given in Table 20.

Of the 41 plants that reported outage cost data in the survey, 31 had a maximum demand greater than 1000 kW and 10 had a maximum demand less than 1000 kW. Cost data for plants with maximum demands less than 1000 kW are not considered particularly reliable due to the small number of such plants represented in the data.

There is a wide spread in the cost of power outages. Consequently few plants with high outage costs can have a significant effect on the overall average cost. In such cases the median cost of power outages may be more representative than the average cost. The median cost is such that half of the plants have a cost greater than this value and half have less. Table 21 shows the median power outage costs. Additional details on the cost of power outages are given in Tables 22-27. These additional details include: 1) number of plants reporting the outage cost per failure and the outage cost per hour of downtime, 2) minimum plant cost, 3) maximum plant cost, 4) costs for various industries.

Tables 22, 24, and 26 give the cost of outage per failure per kilowatt maximum demand. Tables 23, 25, and 27 give the cost of a sustained outage per hour down per kilowatt maximum demand.

*Plant Restart Time*

Each plant was asked to report data on the time required to get the plant back into operation after service is restored following a failure that has caused a complete plant shutdown. A total of 43 plants reported these data. The average plant

TABLE 20 - AVERAGE COST OF POWER OUTAGES FOR INDUSTRIAL PLANTS IN THE UNITED STATES OF AMERICA AND CANADA

| | |
|---|---|
| All Plants | $1.89 per kW + $2.68 per kWh |
| Plants > 1000 kW Max. Demand | $1.05 per kW + $0.94 per kWh |
| Plants < 1000 kW Max. Demand | $4.59 per kW + $8.11 per kWh |

TABLE 21 - MEDIAN COST OF POWER OUTAGES FOR INDUSTRIAL PLANTS IN THE UNITED STATES OF AMERICA AND CANADA

| | |
|---|---|
| All plants | $0.69 per kW + $0.83 per kWh |
| Plants > 1000 kW Max. Demand | $0.32 per kW + $0.36 per kWh |
| Plants < 1000 kW Max. Demand | $3.68 per kW + $4.42 per kWh |

Copyright © 1998 IEEE. All rights reserved.

restart time was 17 h. The median was 4 h. Additional details are given in Table 28.

*Critical Service Loss Duration Time*

One of the most commonly asked questions is, What is a power failure? In particular, How long can power be lost without causing a complete plant shutdown? Each plant was asked to report data giving the maximum length of power failure that will not stop plant production. This time is typically in the range of cycles to minutes and is called "critical service loss duration time."

A total of 55 plants reported data on critical service loss duration time. The median value was 10 s, that is, half of the plants were greater than this value and half were less. Additional details are given in Table 29.

*Loads Lost Versus Time of Power Outage*

Each plant was asked, What loads were lost because of failure even though power was restored promptly? Five types of loads were included in the survey:

1) *computer:* one or more computers or solid-state control devices operated incorrectly;
2) *motor:* one or more motors (contactor dropout);
3) *lighting:* lighting load;
4) *solenoid:* one or more solenoid-operated devices dropped out, such as a solenoid-operated fuel valve;
5) *other:* lost other loads, to be described in remarks.

A very short outage duration time after an equipment failure (including electric utility power supply) might not result in a loss of load. Table 30 shows how short power outage duration times after an equipment failure affected the loads lost. The average plant outage duration resulting from these failures is also given in Table 30.

## Discussion of Results

*Cost of Power Outages (Tables 20–27)*

1) There is a wide spread in the cost of power outages (per kilowatt and per kilowatthour) of industrial plants. Even within a given industry, such as chemical, there is a wide spread in the cost of power outages (per kilowatt and per kilowatthour) for different plants.

2) Plants with a maximum demand of less than 1000 kW have a much higher cost of power outages (per kilowatt and per kilowatthour) than plants with a maximum demand of greater than 1000 kW. This indicates that small industrial plants have a higher cost of power outages (per kilowatt and per kilowatthour) than large industrial plants. It is suspected that this may be because the small industrial plants have more employees per kilowatt (and per kilowatthour). It is also possible that high-consumption industries tend to have a lot of electrochemical or heating processes, and these tend to have low outage costs; for example, heat not supplied now can be supplied later, providing the outage is not too long.

3) It is suggested that the "all-industry" data for the 41 and 42 plants should be compiled to show 25 percent and 75 percent in addition to the minimum median and maximum values already tabulated (Tables 22 and 23).

4) It is suggested that future surveys also include the cost of power outages (per kilowatt and per kilowatthour) of commercial buildings.



Copyright © 1998 IEEE. All rights reserved.

TABLE 22 - PLANT OUTAGE COST PER FAILURE PER kW OF MAXIMUM DEMAND - ALL PLANTS ($ per kW)

| Industry | Number of Plants Reporting | Minimum | Median | Maximum | Average |
|---|---|---|---|---|---|
| All Industry - USA & Canada | 42 | .002 | .69 | 10.00 | 1.89 |
| Auto | 0 | - | - | - | - |
| Cement | 0 | - | - | - | - |
| Chemical | 11 | .02 | .22 | 3.33 | .75 |
| Metal | 2 | .18 | 2.42 | 4.67 | 2.42 |
| Mining | 0 | - | - | - | - |
| Petroleum | 5 | .002 | .07 | .31 | .12 |
| Pulp and Paper | 1 | .33 | .33 | .33 | .33 |
| Rubber and Plastics | 2 | .28 | .50 | .71 | .50 |
| Textile | 2 | .07 | 1.00 | 1.92 | 1.00 |
| Other Light Manufacturing | 6 | .09 | 1.10 | 2.80 | 1.22 |
| Other Heavy Manufacturing | 8 | 1.67 | 3.85 | 10.00 | 5.11 |
| Other | 5 | .25 | .94 | 7.50 | 2.86 |
| Foreign | 1 | .33 | .33 | .33 | .33 |

TABLE 23 - PLANT OUTAGE COST PER HR. DOWNTIME PER kW OF MAXIMUM DEMAND - ALL PLANTS ($ per kWh)

| Industry | Number of Plants Reporting | Minimum | Median | Maximum | Average |
|---|---|---|---|---|---|
| All Industry - USA & Canada | 41 | .0009 | .83 | 27.00 | 2.68 |
| Auto | 0 | - | - | - | - |
| Cement | 0 | - | - | - | - |
| Chemical | 12 | .0009 | .14 | 2.11 | .33 |
| Metal | 2 | .55 | .94 | 1.33 | .94 |
| Mining | 0 | - | - | - | - |
| Petroleum | 2 | .04 | 1.24 | 2.43 | 1.24 |
| Pulp and Paper | 1 | .07 | .07 | .07 | .07 |
| Rubber and Plastics | 3 | .28 | .36 | 1.33 | .66 |
| Textile | 1 | .24 | .24 | .24 | .24 |
| Other Light Manufacturing | 6 | .33 | .79 | 2.00 | .91 |
| Other Heavy Manufacturing | 8 | .93 | 6.35 | 27.00 | 9.73 |
| Other | 6 | .75 | 2.50 | 5.77 | 2.69 |
| Foreign | 1 | .07 | .07 | .07 | .07 |

Copyright © 1998 IEEE. All rights reserved.

TABLE 24 - PLANT OUTAGE COST PER FAILURE PER kW OF MAXIMUM DEMAND - PLANTS MORE THAN 1,000 kW MAX. DEMAND ($ per kW)

| Industry | Number of Plants Reporting | Minimum | Median | Maximum | Average |
|---|---|---|---|---|---|
| All Industry - USA & Canada | 32 | .002 | .32 | 7.50 | 1.05 |
| Auto | 0 | - | - | - | - |
| Cement | 0 | - | - | - | - |
| Chemical | 11 | .02 | .22 | 3.33 | .75 |
| Metal | 1 | .18 | .18 | .18 | .18 |
| Mining | 0 | - | - | - | - |
| Petroleum | 5 | .002 | .07 | .31 | .12 |
| Pulp and Paper | 1 | .33 | .33 | .33 | .33 |
| Rubber and Plastics | 2 | .28 | .50 | .71 | .50 |
| Textile | 2 | .07 | 1.00 | 1.92 | 1.00 |
| Other Light Manufacturing | 4 | .09 | 1.10 | 2.80 | 1.27 |
| Other Heavy Manufacturing | 1 | 1.87 | 1.87 | 1.87 | 1.87 |
| Other | 5 | .25 | .94 | 7.50 | 2.86 |
| Foreign | 1 | .33 | .33 | .33 | .33 |

TABLE 25 - PLANT OUTAGE COST PER HR. DOWNTIME PER kW OF MAXIMUM DEMAND - PLANTS MORE THAN 1,000 kW MAX. DEMAND ($ per kWh)

| Industry | Number of Plants Reporting | Minimum | Median | Maximum | Average |
|---|---|---|---|---|---|
| All Industry - USA & Canada | 31 | .0009 | .36 | 5.77 | .94 |
| Auto | 0 | - | - | - | - |
| Cement | 0 | - | - | - | - |
| Chemical | 12 | .0009 | .14 | 2.11 | .33 |
| Metal | 1 | .55 | .55 | .55 | .55 |
| Mining | 0 | - | - | - | - |
| Petroleum | 2 | .04 | 1.24 | 2.43 | 1.24 |
| Pulp and Paper | 1 | .07 | .07 | .07 | .07 |
| Rubber and Plastics | 3 | .28 | .36 | 1.33 | .66 |
| Textile | 1 | .24 | .24 | .24 | .24 |
| Other Light Manufacturing | 4 | .33 | .54 | 1.20 | .65 |
| Other Heavy Manufacturing | 1 | .93 | .93 | .93 | .93 |
| Other | 6 | .75 | 2.50 | 5.77 | 2.69 |
| Foreign | 1 | .07 | .07 | .07 | .07 |





Copyright © 1998 IEEE. All rights reserved.

TABLE 26 - PLANT OUTAGE COST PER FAILURE PER kW OF MAXIMUM DEMAND - PLANTS LESS THAN 1,000 kW MAX. DEMAND ($ per kW)

| Industry | Number of Plants Reporting | Minimum | Median | Maximum | Average |
|---|---|---|---|---|---|
| All Industry - USA & Canada | 10 | .50 | 3.68 | 10.00 | 4.59 |
| Auto | 0 | - | - | - | - |
| Cement | 0 | - | - | - | - |
| Chemical | 0 | - | - | - | - |
| Metal | 1 | 4.67 | 4.67 | 4.67 | 4.67 |
| Mining | 0 | - | - | - | - |
| Petroleum | 0 | - | - | - | - |
| Pulp and Paper | 0 | - | - | - | - |
| Rubber and Plastics | 0 | - | - | - | - |
| Textile | 0 | - | - | - | - |
| Other Light Manufacturing | 2 | .50 | 1.11 | 1.72 | 1.11 |
| Other Heavy Manufacturing | 7 | 1.67 | 5.00 | 10.00 | 5.57 |
| Other | 0 | - | - | - | - |
| Foreign | 0 | - | - | - | - |

TABLE 27 - PLANT OUTAGE COST PER HR. DOWNTIME PER kW OF MAXIMUM DEMAND - PLANTS LESS THAN 1,000 kW MAX. DEMAND ($ per kWh)

| Industry | Number of Plants Reporting | Minimum | Median | Maximum | Average |
|---|---|---|---|---|---|
| All Industry - USA & Canada | 10 | .86 | 4.42 | 27.00 | 8.11 |
| Auto | 0 | - | - | - | - |
| Cement | 0 | - | - | - | - |
| Chemical | 0 | - | - | - | - |
| Metal | 1 | 1.33 | 1.33 | 1.33 | 1.33 |
| Mining | 0 | - | - | - | - |
| Petroleum | 0 | - | - | - | - |
| Pulp and Paper | 0 | - | - | - | - |
| Rubber and Plastics | 0 | - | - | - | - |
| Textile | 0 | - | - | - | - |
| Other Light Manufacturing | 2 | .86 | 1.43 | 2.00 | 1.43 |
| Other Heavy Manufacturing | 7 | 3.33 | 7.69 | 27.00 | 11.00 |
| Other | 0 | - | - | - | - |
| Foreign | 0 | - | - | - | - |

Copyright © 1998 IEEE. All rights reserved.

TABLE 28 - PLANT RESTART TIME (After Service is Restored Following a Failure that has Caused Complete Plant Shutdown)

| Industry | Number of Plants Reporting | Average (Hours) | Median (Hours) |
|---|---|---|---|
| All Industry - USA & Canada.. | 43 | 17.4 | 4.0 |
| Auto..... | 0 | - | - |
| Cement..... | 0 | - | - |
| Chemical..... | 19 | 20.7 | 20 |
| Metal..... | 1 | 4 | 4 |
| Mining..... | 0 | - | - |
| Petroleum..... | 3 | 37.3 | 24 |
| Pulp and Paper..... | 1 | 10 | 10 |
| Rubber & Plastics..... | 3 | 2.33 | 2 |
| Textile..... | 3 | 58.3 | 72 |
| Other Light Manufacturing.... | 7 | 2.14 | 2 |
| Other Heavy Manufacturing.... | 1 | 2 | 2 |
| Other..... | 5 | 2.6 | 1 |
| Foreign..... | 1 | 48 | 48 |

TABLE 29 - CRITICAL SERVICE LOSS DURATION (Maximum Length of Power Failure that Will Not Stop Plant Production)

| Industry | Number of Plants Reporting | Average | Median |
|---|---|---|---|
| All Industry - USA & Canada.... | 55 | 12.6 min. | 10.0 sec. |
| Auto..... | 0 | - | - |
| Cement..... | 0 | - | - |
| Chemical..... | 20 | 4.56 min. | 1.25 sec. |
| Metal..... | 2 | 15.0 min. | 15.0 min. |
| Mining..... | 0 | - | - |
| Petroleum..... | 1 | 1.0 sec. | 1.0 sec. |
| Pulp and Paper..... | 1 | 10.0 cycles | 10.0 cycles |
| Rubber & Plastics..... | 3 | 30.0 sec. | 20.0 sec. |
| Textile..... | 3 | 3.34 min. | 30.0 cycles |
| Other Light Manufacturing..... | 7 | 10.3 min. | 10.0 sec. |
| Other Heavy Manufacturing..... | 10 | 47 min. | 45 min. |
| Other..... | 8 | 1.9 min. | 20.0 cycles |
| Foreign..... | 1 | 15.0 cycles | 15.0 cycles |



Copyright © 1998 IEEE. All rights reserved.

TABLE 30 - LOADS LOST VERSUS TIME OF POWER OUTAGE
(Tabulation of the Percentage of Equipment Failures for Which the Designated Load was Lost and Average Plant Outage Duration Resulting from these Failures)

| | For Equipment Failures 1 Cycle or less in Duration | | | For Equipment Failures Between 1 and 10 Cycles in Duration | | | For Equipment Failures 10 Cycles or More in Duration | | |
|---|---|---|---|---|---|---|---|---|---|
| Type of Load | Yes | No | Not Known | Yes | No | Not Known | Yes | No | Not Known |
| Computer | 0% | 0% | 0% | 4% | 96% | 0% | 9% | 91% | 0% |
| Motor | 0% | 0% | 0% | 33% | 67% | 0% | 67% | 33% | 0% |
| Lighting | 0% | 0% | 0% | 22% | 78% | 0% | 38% | 61% | 2% |
| Solenoid | 0% | 0% | 0% | 22% | 74% | 4% | 25% | 66% | 9% |
| Other | 0% | 0% | 0% | 7% | 15% | 78% | 25% | 62% | 13% |
| Average Plant Outage Duration | 0.0 Hours | | | 1.39 Hours | | | 22.6 Hours | | |

Only non-zero data was used in computing the average plant outage duration

5) Additional information on the cost of power outages in Sweden, Norway, and the United States is contained in [2].

*Plant Restart Time (Table 28)*

The textile, petroleum, and chemical industries have a much longer plant restart time than the other industries included in the survey.

*Critical Service Loss Duration (Table 29)*

1) There is a wide spread in critical service loss duration time for the 55 plants in the survey.

2) It is suggested that the data from the 55 plants should be compiled to show several percentiles (10, 25, 75, and 90 percent) in addition to the median value already tabulated.

*Loads Lost Versus Time of Power Outage (Table 30)*

1) An outage between 1 to 10 cycles resulted in 33 percent of the plants losing motor loads and 22 percent losing a solenoid and only 4 percent losing a computer load. An outage greater than 10 cycles resulted in 67 percent of the plants losing motor loads and 25 percent losing a solenoid and only 9 percent losing a computer load; many plants must not have had computer loads to give such a low value. In fact, many plants must not have had motor loads or solenoid loads either. The important parameter to look at is the change in these percentages from 0 to the maximum value as the length of power outage time is increased.

2) It is suggested that loss of load data be compiled for the following additional categories of outage duration time:

a) 10 to 15 cycles,
b) 15+ to 30 cycles,
c) 0.5 + to 2.0 s,
d) 2.0+ to 4.0 s,
e) greater than 4.0 s.

The average plant outage duration should also be determined for these categories.

## REFERENCES

[1] IEEE Committee Report, "Report on reliability survey of industrial plants; Part I: Reliability of electrical equipment," this issue, pp. 213-235.

[2] R. B. Shipley, A. D. Patton, and J. S. Denison "Power reliability cost vs worth," *IEEE Trans. Power App. Syst.*, vol. PAS-91, pp. 2204-2212, Sept./Oct. 1972.

Copyright © 1998 IEEE. All rights reserved.

APPENDIX A

# Report on Reliability Survey of Industrial Plants, Part III: Causes and Types of Failures of Electrical Equipment, the Methods of Repair, and the Urgency of Repair

IEEE COMMITTEE REPORT

*Abstract*—An IEEE sponsored reliability survey of industrial plants was completed during 1972. This included the causes and types of failures of electrical equipment, the methods of repair, and the urgency of repair. The results are reported from the survey of 30 companies covering 68 plants in nine industries in the United States and Canada. This information is useful in the design of industrial power distribution systems.

## Introduction

A KNOWLEDGE of the causes and types of failures of electrical equipment is useful in the design of industrial power distribution systems. In addition it is also useful to know the failure repair method, whether or not the repair was urgent, and how long it had been since the previous maintenance had been performed. During 1972 the Reliability Subcommittee of the IEEE Industrial and Commercial Power Systems Committee completed a reliability survey of industrial plants. This is the third paper reporting results from the survey. Included in this paper are the results for 14 main classes of electrical equipment on

1) failure repair method;
2) failure repair urgency;
3) failure, months since maintained;
4) failure, damaged part;
5) failure type;
6) suspected failure responsibility;
7) failure initiating cause;
8) failure contributing cause;
9) failure characteristic.

The failure repair method includes either the repair of the failed component or the replacement of the failed component with a spare. This can have a significant effect on the average downtime per failure, and thus is an important factor in reliability and availability calculations.

Paper TOD-73-158, approved by the Industrial and Commercial Power Systems Committee of the IEEE Industry Applications Society for presentation at the 1973 Industrial and Commercial Power Systems Technical Conference, Atlanta, Ga., May 13-16. Manuscript released for publication November 5, 1973.

Members of the Reliability Subcommittee of the IEEE Industrial and Commercial Power Systems Committee are W. H. Dickinson, *Chairman*, P. E. Gannon, M. D. Harris, C. R. Heising, D. W. McWilliams, R. W. Parisian, A. D. Patton, and W. J. Pearce.

The failure repair urgency also has a significant effect on the average downtime per failure and thus is an important factor in reliability and availability calculations.

A preventive maintenance program can have an effect on the failure rate of electrical equipment. Thus a knowledge of whether or not maintenance has been performed recently prior to the failure is a significant factor in helping to determine whether or not the maintenance program is adequate.

The damaged part from a failure is of interest. In addition, a knowledge is also desirable of the type of failure, initiating cause, contributing cause, and suspected responsibility. This information is useful for correcting deficiencies in electrical equipment and electrical systems.

The failure characteristic can be defined as the effect that the failure has on the electrical system. Thus this information is very important.

## Survey Form

The survey form used is shown in Appendix A of Part I [1]. All of the information reported on in this paper came from card type 3, columns 30-46. The definitions of *failure* and *repair time* are given in Part I [1].

## Response to Survey

A total of 30 companies responded to the survey questionnaire, reporting data on 68 plants from nine industries in the United States and Canada. Every failure report on card type 3 did not have filled in all the information called for in columns 30-46. Tables 31 and 32 give the data for each main equipment class on how many failures had the information called for in columns 30-46. Each main equipment class contains 18 or more failures; this is believed to be an adequate statistical sample size.

## Statistical Analysis

The results were compiled for 14 main equipment classes. The number of failures were tabulated for each category of each column (30-46, card type 3). This was then divided by the total failures in each column so as to give the percentage for each category for each column (for each main equipment class).



Copyright © 1998 IEEE. All rights reserved.

## Survey Results

The results are tabulated for the 14 main equipment classes in Tables 33–41. Each table represents one column (of 30–46, card type 3).

## Summary of Conclusions

### *Transformers*

In the cases reported, there were approximately an equal number of incidences of repairing the failed transformer and replacing it with a spare. The repair urgency slightly favored a round-the-clock repair over the regular work-day schedule. Inadequate preventive maintenance did not seem to have much influence on the reported failures since no preventive maintenance was reported on only 5 percent of the failures; 11 percent of the failures were blamed on inadequate maintenance. Damaged insulation both in the windings and bushings accounted for the majority of the transformer damage, with the majority of failures being flashovers involving ground. 24 percent of the reported cases considered normal deterioration from age as the contributing cause of the failure, yet 39 percent reported that they felt the manufacturer was primarily responsible. Transient overvoltages, from lightning or switching surges, and other insulation breakdown account for 41 percent of the reported failures. In 90 percent of the reported cases the transformers were removed from the system by automatic protective devices; only 7 percent had manual removal.

### *Circuit Breakers*

About the same number of circuit breakers were repaired in place as were replaced by spares. The relative importance of circuit breakers was indicated by 73 percent of the survey respondents making repairs on a round-the-clock basis. The bulk of the reported failures involved flashovers to ground with damage primarily to the protective device components and the device insulation. Transient overvoltages, insulation breakdowns, and protective device malfunctions were considered a major initiating cause with normal deterioration from age and misoperation or testing errors considered as contributing causes. However, 33 percent of the respondents could not classify the initiating cause into any of the survey classes, and 55 percent could not classify the contributing cause into any of the survey classes. In addition, 36 percent of the suspected causes of failure were blamed on "other." 42 percent of the reported failures involved circuit breakers opening when they should not; it is possible that several of these failures were external to the circuit breaker and of unknown cause and were blamed on the circuit breaker. 32 percent of the reported failures involved circuit breakers that failed during a load-carrying condition.

23 percent of the failures were blamed on the manufacturer and another 23 percent on inadequate maintenance, but 36 percent were blamed on "other." Inadequate preventive maintenance (PM) could be a factor of some significance since no PM was reported on 16 percent of the failures.

### *Motor Starters*

Of the reported motor starter failures, about two thirds were repaired by replacing the starter with a spare and two thirds were repaired on a round-the-clock basis. About half of the cases reported indicate that the damage was other than the classes listed in the survey, primarily resulting from flashovers or electrical defects. 64 percent felt that a malfunction of a protective relay control device initiated the failure with 40 percent of the respondents reporting that normal deterioration from age was a contributing cause. Over half of the respondents felt that improper application was primarily responsible for the failure. In the cases reported 36 percent had been discovered during testing or maintenance, and 20 percent were only partial failures. Lack of preventive maintenance was not a big problem. Those starters that had been maintained less than 12 months prior to the failure accounted for 67 percent of the cases reported.

### *Motors*

Of the reported motor failures, about three quarters were repaired versus about one fourth being replaced by a spare. About three quarters were repaired on a regular work-day basis. The types of failures varied from flashovers to electrical defects, to mechanical defects, with winding insulation and bearings sustaining the majority of the damage. Insulation breakdown, overheating, and mechanical seizing were blamed as the primary initiating causes with normal deterioration from age, loss or deficiency of lubricant, exposure to abnormal moisture, and exposure to aggressive chemicals ranking high on the list of contributing causes. 30 percent of the failures were discovered during testing or maintenance, which probably resulted in less actual damage in those cases. Inadequate maintenance, improper application, and defective equipment were listed as having primary responsibility. However, over half of the respondents could not assign responsibility into one of the survey classes. The motors that had been maintained between 12 and 24 months prior to the failure accounted for 57 percent of the reported cases with less than 12 months and more than 24 months accounting for 22 percent and 19 percent, respectively. No preventive maintenance accounted for only 2 percent, yet this does not correlate well with inadequate maintenance being listed as having primary responsibility in 17 percent of the reported cases.

### *Generators*

Of the reported generator failures 84 percent were repaired in place. About the same number were repaired on a round-the-clock basis as were repaired on a regular work-day basis. 69 percent of the respondents reported damage other than the survey classes with electrical auxiliaries, winding insulation, and moving parts sustaining some damage. Mechanical breaking, transient overvoltages; and about half unclassified items were considered the primary initiating causes with normal deterioration from age and persistent overloading considered contributing causes. Responsibility was spread between inadequate maintenance and defective components with about half of the respondents unable to place primary responsibility into any of the survey classes. Infrequent or no preventive maintenance were not involved in any of the reported cases, a point that does not correlate with the fact that some of the respondents felt inadequate maintenance was the primary responsibility.

### *Disconnect Switches*

Of the reported disconnect switch failures, 70 percent were repaired by replacement with a spare, with work in 80 percent of the cases being performed on a regular work-day schedule. Electrical defects, mechanical defects, and flashovers to ground resulted in damage to mechanical components and insulation. Some form of mechanical breaking or contact from foreign

Copyright © 1998 IEEE. All rights reserved.

TABLE 31 - NUMBER OF FAILURES FOR ELECTRIC UTILITY POWER SUPPLIES THAT CONTAINED THE INFORMATION CALLED FOR IN COLUMNS 30-46, CARD - TYPE 3

| Card Type 3 Column | Title | Number of Failures |
|---|---|---|
| 30 | Failure Repair Method..... | 28 |
| 32 | Failure Repair Urgency..... | 35 |
| 34 | Failure, Months Since Maintained.. | 25 |
| 36 | Failure, Damaged Part..... | 39 |
| 38 | Failure Type..... | 49 |
| 40 | Suspected Failure Responsibility.. | 43 |
| 42 | Failure Initiating Cause..... | 53 |
| 44 | Failure Contributing Cause..... | 53 |
| 46 | Failure Characteristic..... | 145 |

TABLE 32 - NUMBER OF FAILURES FOR EACH MAIN EQUIPMENT CLASS THAT CONTAINED THE INFORMATION CALLED FOR IN COLUMNS 30-46, CARD-TYPE 3

| Main Equipment Class | Maximum | Minimum | Avg. |
|---|---|---|---|
| Transformers | 101 | 97 | 100 |
| Circuit Breakers | 176 | 161 | 171 |
| Motor Starters | 88 | 88 | 88 |
| Motors | 561(col.36) | 493(col.40) | 517 |
| Generators | 83(col.36) | 31(all other) | 37 |
| Disconnect Switches | 101 | 100 | 101 |
| Swgr. Bus-Insulated | 20 | 20 | 20 |
| Swgr. Bus-Bare | 24 | 20 | 23 |
| Bus Duct | 20 | 18 | 20 |
| Open Wire | 109 | 104 | 108 |
| Cable | 223 | 211 | 218 |
| Cable Joints | 45 | 44 | 45 |
| Cable Terminations | 51 | 47 | 50 |



Copyright © 1998 IEEE. All rights reserved.

sources accounted for about half of the initiating causes, with exposure to dust and contaminants and a large number of unclassified items considered contributing causes. Inadequate operating procedures, inadequate maintenance, and defective components were considered primarily responsible, which seems to correlate with over 66 percent of the reported cases not having any preventive maintenance and 21 percent not having any preventive maintenance 24 months prior to the failure.

*Switchgear Bus, Bare*

Of the reported uninsulated switchgear bus failures, about two thirds were repaired in place, with a little more than half of them being repaired on a round-the-clock basis. 79 percent of the respondents report some form of insulation damage all resulting from flashovers either to ground (79 percent) or between phases (21 percent). Mechanical failure, shorting by metal objects, and insulation breakdown were the predominant initiating causes with exposure to abnormal moisture, exposure to dust, exposure to aggressive chemicals, and normal deterioration due to age listed as contributing causes. Interestingly, 15 percent of the respondents listed misoperation or testing errors as a contributing cause. 39 percent felt that an outside agency was responsible for the failure, while 22 percent blamed inadequate maintenance.

*Switchgear Bus, Insulated*

Of the reported insulated switchgear bus failures, essentially all were repaired in place with over two thirds of the repairs being completed on a round-the-clock basis. 90 percent of the respondents reported insulation damage resulting primarily from flashovers to ground and between phases. Insulation breakdown was considered to have initiated the failure in about half of the cases, with exposure to contaminants, moisture, severe weather, and normal deterioration from age being considered as contributing factors. Improper application (45 percent) and inadequate maintenance (35 percent) were held responsible for the failures.

*Bus Duct*

Of the reported bus duct failures, 65 percent were repaired in place with the majority of them being repaired on a round-the-clock basis. 90 percent of the respondents reported some form of damaged insulation resulting from a flashover to ground. Mechanical failure, insulation breakdown, and overheating were blamed as initiating factors, with normal deterioration due to age being listed as a contributing factor in half of the cases. Responsibility for the reported failures varied from defective components (26 percent), improper application (16 percent), to inadequate maintenance (16 percent).

*Open Wire*

Of the reported open-wire failures, 70 percent were repaired in place with a little over half involving a round the clock effort. About half of the failures involved flashovers either to ground or between phases and about 25 percent involved other electrical defects. In the reported failures, transient overvoltages, overheating, or shorting by metal objects were considered the most significant initiating causes, with severe weather and exposure to aggressive chemicals being the predominant contributing causes. 81 percent of the respondents indicated that no preventive maintenance had been performed in over two years, which supports the fact that over a third of them blamed inadequate maintenance as being responsible.

*Cables*

The relative importance of primary cable was again indicated by about two thirds of the reported cases making repairs on a round-the-clock basis. There were a few more reported cases where repairs to cables were made by complete replacement rather than by in-place repairs. About three quarters of the failures involved flashovers to ground, resulting in insulation damage.

Copyright © 1998 IEEE. All rights reserved.

TABLE 33 - FAILURE REPAIR METHOD
TABLE 34 - FAILURE REPAIR URGENCY

| ELECTRIC UTILITY POWER SUPPLIES | TRANSFORMERS | CIRCUIT BREAKERS | MOTOR STARTERS | MOTORS | GENERATORS | DISCONNECT SWITCHES | SWITCHGEAR BUS-INSULATED | SWITCHGEAR BUS-BARE | BUS DUCT | OPEN WIRE | CABLE | CABLE JOINTS | CABLE TERMINATIONS | Table, Title, Category |
|---|---|---|---|---|---|---|---|---|---|---|---|---|---|---|
| % | % | % | % | % | % | % | % | % | % | % | % | % | % | TABLE 33 - FAILURE REPAIR METHOD (Col. 30) |
| 50 | 47 | 51 | 33 | 78 | 84 | 30 | 95 | 71 | 65 | 70 | 47 | 87 | 60 | 1. Repair of failed component in place or sent out for repair |
| 46 | 53 | 49 | 67 | 22 | 16 | 70 | 5 | 29 | 35 | 9 | 53 | 13 | 34 | 2. Repair by replacement of failed component with spare |
| 4 | 0 | 0 | 0 | 0 | 0 | 0 | 0 | 0 | 0 | 21 | 0 | 0 | 6 | 99. Other |
| | | | | | | | | | | | | | | TABLE 34 - FAILURE REPAIR URGENCY (Col. 32) |
| 91 | 51 | 73 | 66 | 23 | 48 | 20 | 70 | 58 | 80 | 55 | 66 | 56 | 53 | 1. Requiring round-the-clock all out efforts |
| 9 | 45 | 22 | 34 | 74 | 52 | 80 | 25 | 33 | 15 | 26 | 28 | 22 | 31 | 2. Requiring repair work only during regular workday, perhaps with some overtime |
| 0 | 4 | 5 | 0 | 2 | 0 | 0 | 5 | 8 | 5 | 0 | 6 | 22 | 16 | 3. Requiring repair work on a non-priority basis |
| 0 | 0 | 0 | 0 | 0 | 0 | 0 | 0 | 0 | 0 | 19 | 0 | 0 | 0 | 99. Other |



Copyright © 1998 IEEE. All rights reserved.

TABLE 35 - FAILURE, MONTHS SINCE MAINTAINED
TABLE 36 - FAILURE, DAMAGED PART

| ELECTRIC UTILITY POWER SUPPLIES | TRANSFORMERS | CIRCUIT BREAKERS | MOTOR STARTERS | MOTORS | GENERATORS | DISCONNECT SWITCHES | SWITCHGEAR BUS-INSULATED | SWITCHGEAR BUS-BARE | BUS DUCT | OPEN WIRE | CABLE | CABLE JOINTS | CABLE TERMINATIONS | Table, Title, Category |
|---|---|---|---|---|---|---|---|---|---|---|---|---|---|---|
| | | | | | | | | | | | | | | TABLE 35 - FAILURE, MONTHS SINCE MAINTAINED (Col. 34) |
| 56 | 34 | 18 | 67 | 22 | 58 | 8 | 10 | 35 | 25 | 1 | 11 | 18 | 12 | 1. Less than 12 months ago |
| 40 | 38 | 60 | 17 | 57 | 42 | 5 | 35 | 30 | 45 | 8 | 13 | 20 | 12 | 2. 12-24 months ago |
| 4 | 22 | 5 | 16 | 19 | 0 | 21 | 55 | 13 | 10 | 81 | 10 | 2 | 36 | 3. Over 24 months ago |
| 0 | 5 | 16 | 0 | 2 | 0 | 66 | 0 | 22 | 20 | 9 | 66 | 60 | 40 | 4. No preventive maintenance |
| 0 | 0 | 0 | 0 | 0 | 0 | 0 | 0 | 0 | 0 | 0 | 0 | 0 | 0 | 99. Other |
| | | | | | | | | | | | | | | TABLE 36 - FAILURE, DAMAGED PART (Col. 36) |
| 0 | 68 | 0 | 5 | 50 | 7 | 0 | 0 | 0 | 15 | 0 | 5 | 0 | 0 | 1. Insulation - winding |
| 8 | 13 | 2 | 0 | 0 | 0 | 1 | 5 | 8 | 10 | 1 | 0 | 0 | 12 | 2. Insulation - bushing |
| 10 | 3 | 19 | 10 | 3 | 0 | 14 | 90 | 71 | 65 | 6 | 84 | 91 | 75 | 3. Insulation - other |
| 0 | 0 | 1 | 0 | 29 | 2 | 0 | 0 | 0 | 0 | 0 | 3 | 0 | 0 | 4. Mechanical - bearings |
| 3 | 0 | 11 | 16 | 3 | 7 | 9 | 0 | 0 | 0 | 0 | 0 | 0 | 0 | 5. Mechanical - other moving parts |
| 15 | 1 | 6 | 2 | 1 | 4 | 30 | 0 | 0 | 0 | 4 | 1 | 0 | 4 | 6. Mechanical - other |
| 10 | 3 | 6 | 13 | 3 | 10 | 8 | 5 | 0 | 0 | 3 | 1 | 0 | 0 | 7. Other electrical - auxiliary device |
| 10 | 1 | 28 | 2 | 0 | 1 | 1 | 0 | 0 | 0 | 3 | 1 | 0 | 0 | 8. Other electrical - protective device |
| 0 | 7 | 1 | 0 | 0 | 0 | 0 | 0 | 0 | 0 | 0 | 0 | 0 | 0 | 9. Tap changer - no load type |
| 0 | 1 | 0 | 0 | 0 | 0 | 0 | 0 | 0 | 0 | 0 | 0 | 0 | 0 | 10. Tap changer - load type |
| 44 | 3 | 26 | 52 | 11 | 69 | 38 | 0 | 21 | 10 | 84 | 6 | 9 | 10 | 99. Other |

Copyright © 1998 IEEE. All rights reserved.

TABLE 37 - FAILURE TYPE

| Table, Title, Category | TABLE 37 - FAILURE TYPE (col. 38) | ELECTRIC UTILITY POWER SUPPLIES | TRANSFORMERS | CIRCUIT BREAKERS | MOTOR STARTERS | MOTORS | GENERATORS | DISCONNECT SWITCHES | SWITCHGEAR BUS-INSULATED | SWITCHGEAR BUS-BARE | BUS DUCT | OPEN WIRE | CABLE | CABLE JOINTS | CABLE TERMINATIONS |
|---|---|---|---|---|---|---|---|---|---|---|---|---|---|---|---|
| | 1. Flashover or arcing involving ground | 43 | 58 | 33 | 14 | 28 | 19 | 15 | 65 | 79 | 70 | 34 | 73 | 70 | 55 |
| | 2. All other flashover or arcing | 4 | 13 | 10 | 20 | 4 | 3 | 4 | 35 | 21 | 30 | 23 | 1 | 9 | 4 |
| | 3. Other electrical defect | 14 | 12 | 19 | 55 | 32 | 29 | 47 | 0 | 0 | 0 | 25 | 7 | 20 | 37 |
| | 4. Mechanical defect | 8 | 10 | 11 | 11 | 31 | 32 | 14 | 0 | 0 | 0 | 6 | 5 | 0 | 4 |
| | 99. Other | 31 | 7 | 27 | 0 | 6 | 16 | 21 | 0 | 0 | 0 | 12 | 14 | 0 | 0 |



Copyright © 1998 IEEE. All rights reserved.

TABLE 38 - SUSPECTED FAILURE RESPONSIBILITY

| ELECTRIC UTILITY POWER SUPPLIES | | TRANSFORMERS | | CIRCUIT BREAKERS | | MOTOR STARTERS | | MOTORS | | GENERATORS | | DISCONNECT SWITCHES | | SWITCHGEAR BUS - INSULATED | | SWITCHGEAR BUS - BARE | | BUS DUCT | | OPEN WIRE | | CABLE | | CABLE JOINTS | | CABLE TERMINATIONS | | Table, Title, Category |
|---|---|---|---|---|---|---|---|---|---|---|---|---|---|---|---|---|---|---|---|---|---|---|---|---|---|---|---|---|
| % | | % | | % | | % | | % | | % | | % | | % | | % | | % | | % | | % | | % | | % | | TABLE 38 - SUSPECTED FAILURE RESPONSIBILITY |
| 8 | | 39 | | 23 | | 18 | | 15 | | 19 | | 29 | | 5 | | 9 | | 26 | | 0 | | 16 | | 0 | | 0 | | 1. Manufacturer-defective Component |
| 0 | | 0 | | 0 | | 0 | | 0 | | 0 | | 0 | | 0 | | 0 | | 0 | | 0 | | 0 | | 0 | | 0 | | 2. Transportation to Site - defective handling |
| 0 | | 2 | | 4 | | 51 | | 9 | | 0 | | 6 | | 45 | | 4 | | 16 | | 2 | | 8 | | 0 | | 18 | | 3. Application Engineering - improper application |
| 0 | | 3 | | 3 | | 0 | | 1 | | 3 | | 4 | | 10 | | 17 | | 5 | | 9 | | 14 | | 50 | | 39 | | 4. Inadequate installation and testing prior to start-up |
| 0 | | 11 | | 23 | | 8 | | 17 | | 19 | | 13 | | 35 | | 22 | | 16 | | 30 | | 10 | | 18 | | 22 | | 5. Inadequate maintenance |
| 6 | | 9 | | 6 | | 3 | | 4 | | 3 | | 40 | | 0 | | 0 | | 0 | | 2 | | 3 | | 0 | | 0 | | 6 Inadequate operating procedures |
| 17 | | 2 | | 5 | | 0 | | 0 | | 0 | | 1 | | 0 | | 22 | | 5 | | 5 | | 4 | | 5 | | 0 | | 7. Outside agency - personnel |
| 32 | | 4 | | 1 | | 0 | | 1 | | 6 | | 0 | | 0 | | 17 | | 0 | | 21 | | 6 | | 2 | | 8 | | 8. Outside agency - other |
| 38 | | 30 | | 36 | | 19 | | 53 | | 48 | | 8 | | 5 | | 9 | | 32 | | 31 | | 38 | | 25 | | 14 | | 99. Other |

Copyright © 1998 IEEE. All rights reserved.

TABLE 39 - FAILURE INITIATING CAUSE

| ELECTRIC UTILITY POWER SUPPLIES | TRANSFORMERS | CIRCUIT BREAKERS | MOTOR STARTERS | MOTORS | GENERATORS | DISCONNECT SWITCHES | SWITCHGEAR BUS-INSULATED | SWITCHGEAR BUS-BARE | BUS DUCT | OPEN WIRE | CABLE | CABLE JOINTS | CABLE TERMINATIONS | Table, Title, Category |
|---|---|---|---|---|---|---|---|---|---|---|---|---|---|---|
| | | | | | | | | | | | | | | TABLE 39 - FAILURE INITIATING CAUSE(Col. 42) |
| 33 | 23 | 13 | 1 | 6 | 10 | 4 | 5 | 5 | 0 | 26 | 26 | 11 | 12 | 1. Transient overvoltage disturbance (lightning, switching surges, arcing ground fault in ungrounded system) |
| 0 | 0 | 0 | 0 | 0 | 0 | 0 | 0 | 0 | 0 | 0 | 0 | 0 | 0 | 2. Overvoltage |
| 0 | 11 | 3 | 1 | 26 | 3 | 4 | 0 | 5 | 30 | 21 | 1 | 0 | 2 | 3. Overheating |
| 5 | 18 | 18 | 8 | 30 | 3 | 5 | 50 | 18 | 20 | 8 | 29 | 40 | 51 | 4. Other insulation breakdown |
| 7 | 17 | 13 | 8 | 4 | 29 | 17 | 10 | 23 | 45 | 7 | 24 | 31 | 24 | 21. Mechanical breaking, cracking, loosening, abrading or deforming of static or structural parts |
| 2 | 0 | 5 | 6 | 20 | 3 | 2 | 0 | 0 | 0 | 0 | 0 | 0 | 0 | 22. Mechanical burnout, friction, or seizing of moving parts. |
| 14 | 1 | 1 | 0 | 3 | 3 | 20 | 0 | 0 | 0 | 10 | 7 | 0 | 4 | 23. Mechanically caused damage from foreign source (digging, vehicular, accident,etc.) |
| 12 | 1 | 2 | 5 | 0 | 0 | 0 | 0 | 23 | 5 | 14 | 2 | 0 | 2 | 41. Shorting by tools or metal objects |
| 2 | 2 | 1 | 1 | 0 | 0 | 0 | 0 | 9 | 0 | 3 | 0 | 0 | 2 | 42. Shorting by birds, snakes, rodents, etc. |
| 0 | 0 | 1 | 0 | 0 | 3 | 0 | 0 | 0 | 0 | 0 | 0 | 0 | 0 | 51. Loss of control power |
| 2 | 1 | 11 | 64 | 5 | 0 | 0 | 0 | 0 | 0 | 0 | 0 | 0 | 0 | 52. Malfunction of protective relay control device, or auxiliary device. |
| 0 | 0 | 0 | 0 | 0 | 0 | 3 | 0 | 0 | 0 | 0 | 0 | 0 | 0 | 61. Low voltage |
| 2 | 0 | 0 | 0 | 0 | 0 | 0 | 0 | 0 | 0 | 0 | 0 | 0 | 0 | 62. Low frequency |
| 21 | 25 | 33 | 7 | 5 | 45 | 45 | 35 | 18 | 0 | 11 | 10 | 18 | 4 | 99. Other |



Copyright © 1998 IEEE. All rights reserved.

TABLE 40 - FAILURE CONTRIBUTING CAUSE

| ELECTRIC UTILITY POWER SUPPLIES | TRANSFORMERS | CIRCUIT BREAKERS | MOTOR STARTERS | MOTORS | GENERATORS | DISCONNECT SWITCHES | SWITCHGEAR BUS - INSULATED | SWITCHGEAR BUS - BARE | BUS DUCT | OPEN WIRE | CABLE | CABLE JOINTS | CABLE TERMINATIONS | Table, Title, Category |
|---|---|---|---|---|---|---|---|---|---|---|---|---|---|---|
| | | | | | | | | | | | | | | TABLE 40 - FAILURE CONTRIBUTING CAUSE (Col. 44) |
| 2 | 13 | 4 | 0 | 5 | 10 | 8 | 0 | 0 | 6 | 0 | 2 | 0 | 0 | 1. Persistent overloading |
| 4 | 0 | 1 | 0 | 1 | 6 | 3 | 5 | 0 | 0 | 0 | 0 | 2 | 0 | 2. Above-normal temperatures |
| 0 | 0 | 0 | 0 | 0 | 0 | 1 | 0 | 0 | 0 | 0 | 0 | 0 | 0 | 3. Below-normal temperature |
| 0 | 0 | 2 | 0 | 7 | 0 | 0 | 0 | 10 | 0 | 28 | 14 | 13 | 10 | 4. Exposure to aggressive chemicals or solvents |
| 2 | 6 | 3 | 0 | 10 | 6 | 4 | 15 | 20 | 17 | 1 | 8 | 22 | 12 | 5. Exposure to abnormal moisture or water |
| 0 | 0 | 0 | 0 | 0 | 3 | 0 | 0 | 5 | 0 | 3 | 2 | 0 | 0 | 6. Exposure to non-electrical fire or burning |
| 0 | 0 | 0 | 0 | 2 | 0 | 0 | 0 | 0 | 0 | 0 | 1 | 0 | 0 | 8. Obstruction of ventilation by foreign objects or material |
| 4 | 24 | 17 | 40 | 34 | 32 | 5 | 20 | 10 | 50 | 3 | 30 | 29 | 24 | 9. Normal deterioration from age |
| 38 | 6 | 1 | 0 | 2 | 3 | 0 | 20 | 5 | 11 | 30 | 15 | 2 | 16 | 10. Severe wind, rain, snow, sleet, or other weather conditions |
| 2 | 0 | 2 | 0 | 0 | 6 | 0 | 0 | 0 | 0 | 1 | 0 | 0 | 0 | 11. Protective relay improperly set |
| 0 | 0 | 1 | 2 | 15 | 0 | 0 | 0 | 0 | 0 | 0 | 0 | 0 | 0 | 12. Loss or deficiency of lubricant |
| 0 | 0 | 0 | 0 | 1 | 0 | 0 | 0 | 0 | 0 | 0 | 0 | 0 | 0 | 13. Loss or deficiency of oil or cooling medium |
| 0 | 3 | 10 | 3 | 0 | 0 | 0 | 0 | 15 | 6 | 2 | 3 | 0 | 8 | 14. Misoperation or testing error |
| 4 | 3 | 3 | 1 | 5 | 0 | 26 | 40 | 20 | 0 | 2 | 1 | 0 | 0 | 15. Exposure to dust or other contaminants |
| 45 | 44 | 55 | 53 | 18 | 32 | 53 | 0 | 15 | 11 | 31 | 24 | 31 | 29 | 99. Other |

Copyright © 1998 IEEE. All rights reserved.

TABLE 41 - FAILURE CHARACTERISTIC

| ELECTRIC UTILITY POWER SUPPLIES | TRANSFORMERS | CIRCUIT BREAKERS | MOTOR STARTERS | MOTORS | GENERATORS | DISCONNECT SWITCHES | SWITCHGEAR BUS - INSULATED | SWITCHGEAR BUS - BARE | BUS DUCT | OPEN WIRE | CABLE | CABLE JOINTS | CABLE TERMINATIONS | Table, Title, Category |
|---|---|---|---|---|---|---|---|---|---|---|---|---|---|---|
| % | % | % | % | % | % | % | % | % | % | % | % | % | % | TABLE 41 - FAILURE CHARACTERISTIC (Col. 46) |
| | | | | | | | | | | | | | | Utility Power Supplies (Select code) |
| 10 | 1 | 0 | 0 | 0 | 0 | 0 | 30 | 8 | 10 | 0 | 17 | 0 | 12 | 1. Failure of single circuit (no redundant supply) |
| 71 | 0 | 1 | 0 | 0 | 0 | 0 | 5 | 0 | 0 | 0 | 7 | 0 | 2 | 2. Failure of one circuit of a double-circuit redundant supply |
| 15 | 0 | 0 | 0 | 0 | 0 | 0 | 0 | 0 | 0 | 0 | 0 | 0 | 0 | 3. Failure of both circuits of a double-circuit redundant supply |
| 2 | 0 | 1 | 0 | 0 | 0 | 0 | 0 | 8 | 0 | 0 | 0 | 0 | 0 | 4. Failure of all circuits of a three or more circuit redundant supply |
| 0 | 0 | 0 | 0 | 0 | 3 | 0 | 0 | 0 | 0 | 0 | 0 | 0 | 0 | 5. Partial failure of a three or more circuit redundant supply |
| | | | | | | | | | | | | | | Transformers (Select Code) |
| 0 | 90 | 0 | 0 | 0 | 0 | 4 | 0 | 0 | 0 | 0 | 4 | 0 | 2 | 6. Automatic removal by protective equipment |
| 0 | 1 | 0 | 0 | 0 | 0 | 0 | 0 | 0 | 0 | 0 | 0 | 0 | 0 | 7. Partial failure reducing capacity |
| 0 | 7 | 0 | 0 | 0 | 0 | 0 | 0 | 0 | 0 | 0 | 0 | 0 | 0 | 8. Manual removal |



Copyright © 1998 IEEE. All rights reserved.

TABLE 41 - FAILURE CHARACTERISTIC

| Table, Title, Category | ELECTRIC UTILITY POWER SUPPLIES | TRANSFORMERS | CIRCUIT BREAKERS | MOTOR STARTERS | MOTORS | GENERATORS | DISCONNECT SWITCHES | SWITCHGEAR BUS - INSULATED | SWITCHGEAR BUS - BARE | BUS DUCT | OPEN WIRE | CABLE | CABLE JOINTS | CABLE TERMINATIONS |
|---|---|---|---|---|---|---|---|---|---|---|---|---|---|---|
| Circuit Breakers (Select Code) | | | | | | | | | | | | | | |
| 9. Failed to close when it should | 0 | 0 | 5 | 1 | 0 | 0 | 0 | 0 | 0 | 0 | 0 | 0 | 0 | 0 |
| 10. Failed while opening | 0 | 0 | 9 | 1 | 0 | 0 | 0 | 0 | 0 | 15 | 0 | 0 | 0 | 0 |
| 11. Opened when it shouldn't | 0 | 0 | 42 | 1 | 0 | 6 | 0 | 0 | 0 | 0 | 0 | 0 | 0 | 0 |
| 12. Damaged while successfully opening | 0 | 0 | 7 | 0 | 0 | 0 | 0 | 0 | 0 | 0 | 0 | 0 | 0 | 0 |
| 13. Damaged while closing | 0 | 0 | 2 | 0 | 0 | 0 | 0 | 0 | 0 | 0 | 0 | 0 | 0 | 0 |
| 14. Failed while operating (not while opening or closing) | 0 | 0 | 32 | 0 | 0 | 0 | 0 | 0 | 0 | 0 | 0 | 0 | 0 | 0 |
| General (Select Code for any other class) | | | | | | | | | | | | | | |
| 15. Failed (this applies to all classes | 0 | 1 | 0 | 34 | 68 | 65 | 68 | 65 | 71 | 65 | 69 | 65 | 96 | 65 |
| 16. Failed during testing or maintenance | 0 | 0 | 1 | 5 | 1 | 0 | 3 | 0 | 13 | 5 | 2 | 2 | 4 | 2 |
| 17. Damage discovered during testing or maintenance | 0 | 0 | 1 | 36 | 30 | 0 | 18 | 0 | 0 | 0 | 1 | 2 | 0 | 12 |
| 20. Partial failure | 0 | 0 | 0 | 20 | 0 | 16 | 6 | 0 | 0 | 5 | 6 | 3 | 0 | 6 |
| 99. Other | 0 | 0 | 0 | 1 | 0 | 10 | 1 | 0 | 0 | 0 | 23 | 1 | 0 | 0 |

Copyright © 1998 IEEE. All rights reserved.

An interesting point is that in over two thirds of the failures there had been no preventive maintenance, yet inadequate maintenance was only listed in 10 percent of the cases as being responsible for the failure. 16 percent placed the responsibility with the manufacturer, 14 percent with inadequate installation and testing prior to start-up, with 38 percent of the cases reporting reasons for the failure in classes other than those listed in the survey.

The initiating causes varied from transient overvoltage disturbances to insulation breakdown, to mechanical failures, with 30 percent reporting normal deterioration from age as a contributing cause.

*Cable Joints*

Of the failures reported, 87 percent were repaired in place, with just over half being repaired on a round-the-clock basis. Almost all of the failures resulted in damaged insulation, primarily from flashovers to ground, which were initiated by insulation breakdowns, transient overvoltages, or mechanical failure.

29 percent of the respondents felt that normal deterioration from old age contributed to the failure, while 35 percent blamed abnormal moisture or exposure to aggressive chemicals. Inadequate installation and testing were considered responsible for 50 percent of the failures. 60 percent of the respondents reported that no preventive maintenance had been performed, but only 18 percent blamed the failure on inadequate maintenance.

*Cable Terminations*

Of the reported cable termination failures, 60 percent were repaired in place with just over half of the repairs being made on a round-the-clock basis. The primary damage was insulation involving either a flashover to ground or other electrical defect. About half of the respondents felt that the failure was initiated by an insulation breakdown, with normal deterioration due to age, severe weather, and exposure to abnormal moisture or aggressive chemicals contributing significantly to the problem. 39 percent felt that inadequate installation and testing prior to start-up was primarily responsible, while 22 percent felt that inadequate maintenance should be blamed. This also seems to correspond to the reporting that in 40 percent of the cases no preventive maintenance had been performed in over two years.

## General Conclusions

*Electrical Equipment*

The general picture from Tables 38 and 35 spotlights inadequate maintenance as a significant factor in the suspected responsibility for failures. Yet the owner appears willing to work round the clock to fix failures after they have occurred. Lack of cleaning and lubrication is apparent on disconnect switches, buses, open wire, cable, cable joints, cable terminations, and motors.

*Electric Utility Power Supplies*

Many of the results shown in Tables 33–38 are not really applicable for electric utility power supplies because the questions asked are not well suited. The importance of the utility supply was indicated by 91 percent of respondents making repairs on a round-the-clock basis. The failures were predominantly flashovers involving ground, caused by lightning during severe weather or by dig-ins or vehicular accident. Outside agencies, probably the local utility, were predominantly responsible for the failure with preventive maintenance having no apparent effect on the cases reported.

The data reported under "failure characteristic" in Table 41 are of special significance in the case of double- or triple-circuit electric utility power supplies. In particular, the failure rate can

TABLE 42 - SIMULTANEOUS FAILURE OF ALL CIRCUITS IN ELECTRIC UTILITY POWER SUPPLIES

| % of 145 Failures from Table 41 | Number of Failures | Utility Power Supplies - Failure Characteristic from Table 41 |
|---|---|---|
| 15% | 22 | 3. Failure of both circuits of a double-circuit redundant supply |
| 2% | 3 | 4. Failure of all circuits of a three or more circuit redundant supply |
| 17% | 25 | Total number of simultaneous failures of all circuits in a double or more circuit redundant supply |



Copyright © 1998 IEEE. All rights reserved.

be calculated for the simultaneous failure of all circuits in a double- or triple-circuit electric utility power supply.

From Table 3 of Part 1 [1] the sample size is 210.7 unit-years for a double- or triple-circuit electric utility power supply. A double- or triple-circuit supply operating for one year is counted as one unit-year. It is possible to calculate a failure rate from these data as follows:

$$\frac{25}{210.7} = 0.119 \text{ failures per year for simultaneous failure of all circuits in a double- or triple-circuit electric utility power supply.}$$

Some discrepancies were found in the data on the number of installed units for double- and triple-circuit electric utility power supplies. See the discussion in Part 1 [1] on this point.

*Discrepancies*

A survey such as this one often obtains some data that appear to contain errors. Sometimes the results look ridiculous. However, some of the ridiculous looking results may actually be correct. Some of the errors are believed due to a misinterpretation of the question by the respondent.

The data in Tables 31–41 have been published without attempting to correct discrepancies or errors. A brief list of some possible discrepancies is given.

*Table 36:* The damaged part of one percent of failed circuit breakers is a tap changer. The damaged part of three percent of failed cables is a bearing. Winding insulation is shown as the damaged part in failures of cables, bus ducts, and motor starters.

*Table 39:* Three percent of the failures in disconnect switches were initiated by low voltage.

REFERENCES

[1] IEEE Committee Report, "Report on reliability survey of industrial plants, Part I: Reliability of electrical equipment," this issue, pp. 213–235.

## Discussion

**J. Krasnodebski, N. M. Thompson, D. H. Cooke, A. W. W. Cameron, S. Basu, and T. J. Ravishanker** (Ontario Hydro, Toronto, Ont., Canada):

1) *Quality of Input Data:* The confidence level of data in a survey of this kind cannot be assessed by mathematics only. One key problem is the adequacy of records and completeness of data. Some of the apparent discrepancies noted in the paper seem to indicate quite substantial omissions in records. Unless the industries involved keep much better failure records than we have done to date, this is not surprising. The first requirement of a useful reliability program is an adequately complete and accurate system for recording failures and consequences (in outage terms).

TABLE A
GENERATORS

Forced Outages

EEI Report

| Sample Size (unit-years) | Number of Occurrences per Unit-Year | Outage Hours per Occurrence |
|---|---|---|
| 204 | 0.142 | 91.8 |
| 404 | 0.839 | 126.5 |
| 705 | 0.521 | 54.4 |
| 483 | 0.393 | 125.6 |

IEEE Reliability Survey

| Type of Drive | Sample Size (unit-years) | Number of Occurrences per Unit-Year | Outage Hours per Occurrence |
|---|---|---|---|
| Steam turbines* | 761.8 | 0.032 | 165.0 |
| Jet engines | | | |
| Gas turbines | 89.4 | 0.638 | 23.1 |
| Diesel engines | 59.4 | 0.067 | 127.0 |

*EEI results are for generators 60–89 MW.

Copyright © 1998 IEEE. All rights reserved.

The requirements for better records, along with the detail involved in the report forms, indicate that acquiring useful data of this kind is time consuming.

It is suggested that, if a choice is necessary, it might be preferable to have a limited (but statistically adequate) number of plants establish a reliably complete recording and reporting system rather than increase the size of the sample under current record systems.

2) *Survey Results on Equipment Failures:* The failure rate is given in failures per unit-year. Is year in this context a calendar year or 8760 hours of plant or equipment operating time? If the failure rate is given per calendar year, were adjustments made for plants operating for 40 hours per week against those operating for up to 168 hours per week?

3) *Discussion of Equipment:*

*Motors:* It is suspected that the discrepancy in failure rates results from the different application of the two types of motors. Synchronous motors are usually applied only in engineered situations and are carefully designed for the application. Large synchronous motors are usually slow speed. Induction motors are mass produced, purchased off the shelf at the lowest cost, and usually operated to take advantage of any service factor. The survey figures are probably correct but cannot be used for comparison of reliability, leading to a conclusion that synchronous motors are more reliable. It is a comparison of apples and oranges.

*Switchgear Bus:* The paper states that the reported data are the opposite to what they should be. The reported figures may be correct. Manufacturers regularly reduce the spacing between buses and the spaces between phases and ground when they use insulated bus. As the conductor insulation is usually also reduced by design and occasionally by inferior material standards compared to that on insulated cables, and workmanship is frequently less than perfect, failures on this type of gear are probably at least as common as those on air-insulated equipment.

*Circuit Breakers:* The failure rate for circuit breakers appears much too low. It must of course be a function of the frequency of operation as well as lapsed time. We did not find a definition of circuit breaker failure, which we believe should differ from cable, transformer, or other static device failures. Circuit breaker failures should be based on failure to operate satisfactorily either to remain closed or to open or to close when called upon. It should be clear whether these figures include failures caused by auxiliaries such as instrument transformers, relays, and control switches. Since any calculation of the reliability of a power system would be made unreasonably complex by attempts to treat all these devices individually, a figure for circuit breaker failures which includes them is usually required by the designer.

*Generators:* For the generators in the electrical power industry a good source of data exists in the EEI "Report on Equipment Availability for Twelve-Year Period 1960–1971." The comparison between the failure rates and average repair time contained in that report and the survey discussed are shown in Table 43. EEI data quoted for steam turbine driven generators are for the size class 60–89 MW, which is probably larger than the average size of a corresponding generator included in the industrial survey.

It can be seen that the EEI failure rate for steam turbine driven generators based on forced outages is higher by a factor of 5 than in the industrial survey. For gas turbines, failure rates contained in both reports are of the same order, while the outage duration quoted in the EEI report is higher. 54 failures in 5.5 unit years in the petroleum industry can probably be explained by the start-up troubles.

In summary, experience in the utility industry seems to explain results obtained in the industrial survey to a large degree.

4) *Causes of Failure:*

a) How important is the age of equipment? It is mentioned only as a "contributing cause," second in frequency only to "other." Are there economic replacement times, or does obsolescence usually come first?

b) Should the inference be drawn that reliability of industrial equipment, which is reasonably well suited to its job, depends mainly on 1) stringent acceptance testing, especially overvoltage testing, 2) adequate cleaning, and 3) proper lubrication of bearings?

5) *Additional Suggestions for Analysis:* Consideration should be given to add the manufacturer of the main class of equipment to provide information on reliability of different manufacturers.

**Carl Becker** (Cleveland Electric Illuminating Company, Cleveland, Ohio 44101): The Reliability Subcommittee did an outstanding job in assembling and correlating the mountainous volume of data in a simple, easy to understand tabulation. I would like to add some discussion that I feel would help the value of these tables and add to the accuracy of future studies. My two main points are 1) the downtime per failure on a single-circuit utility supply is extremely high (possibly by a factor of five), and 2) the equation for the dollars lost per interruption may be improved by using other than the kilowatt demand and kilowatthour usage as bases.

My company gathers, codes, and analyzes by computer all interruptions to our three quarter million customers. The average downtime per customer on our distribution system (which is a single-circuit radial supply) has been between 51 and 61 min for five of the past six years. Our service area experienced a catastrophic storm during 1969 which caused the average downtime per customer to jump to 124 min. In addition, my company is of the opinion that no plant should be down for more than 4 h (barring major catastrophies). A report is therefore written for each interruption exceeding 4 h in duration, and these reports are extremely few in number. Furthermore, 13 utilities have polled their reliability statistics for customers fed from the distribution system and found the average downtime per interruption for 1971 to be approximately 1½ h long. The average downtimes ranged from 0.75 to 3.2 h.

This information shows that the downtime per failure for industrial plants is probably outside the predicted tolerance on the IEEE data. This variance may be due to either a major long disturbance affecting a majority of those industrial plants participating or to misinterpretation of the information required.

For over five years I have worked with our customers in regard to reliability problems. My experience has shown that the plant investment, labor cost, and value of product is a better gauge of the cost per minute down than would be either maximum kilowatthour demand or usage. For example, I worked with a manufacturer of magnesium parts for military aircraft (I will call this plant *A*) and another manufacturer of parts for conveyor systems (plant *B*). The dollar loss for *A* per minute down was 100 times greater than that for *B*. However, plant *B*'s demand is 2500 kW and *A*'s demand is 500 kW, which is an indication that the kilowatthour consumptions in these particular cases are not related at all to the economical loss due to a power interruption. In general I find that the cost of downtime is tied heavily to one of the following: 1) the number of employees, 2) the cost of the product in production (piecework), or 3) the dollar output per hour (high production). A combination of these three items would indicate that loss is tied to the dollars out of the plant per unit of time. Therefore I feel that future studies should relate downtime to dollars per minute of plant production, gross plant, etc.

**J. W. Beard** (Union Carbide Corporation, South Charleston, W. Va. 25303): The report format and the manner in which the information is presented is generally quite adequate. Appendix A (Part 1) is somewhat difficult to read because of the reduced print, but I am not suggesting it be upgraded for this report. Because of the many and various pieces of data used for the report, it is understandable that the reader must spend a great deal of time in studying and analyzing the information in order to properly apply it. The "readily" understandable factor should perhaps be given more consideration in defining the criteria for future surveys.

It is my opinion that the most useful types of information presented are:

1) failure rate and failure rate confidence limits;
2) failure, damaged part;
3) failure type;
4) failure initiating cause;
5) failure contributing cause;
6) failure characteristics.

I believe it is a good assumption that the raw data submitted for many of the other types of information represented were of much lesser accuracy than for these. For example, most plants reporting data for information types such as plant outage cost, critical service loss duration, and loads lost versus time of power outage probably had to draw on someone's memory of each failure and then apply the "best estimate" principle. This factor alone raises the question as to whether these types of information can ever be constructed to have useful



Copyright © 1998 IEEE. All rights reserved.

meaning. Except for near catastrophic failures, which result in heavy financial losses, it is doubtful that most plants will spend the money to document this type of data. Furthermore, in a practical sense, when configuring systems and applying electrical equipment, the reliability requirement must be carefully considered for each producing unit served inasmuch as there are many variables that enter into the calculation of downtime losses.

The following suggestions are offered for consideration in any future surveys.

1) Basically concentrate on failure rates and failure causes.

2) Simplify and reduce scope of the survey questionnaire forms (present forms tend to scare users from contributing).

3) Omit asking for types of information such as cost of outage, repair time, plant start-up time, etc.

4) Instruct users *not to* report failures of equipment where reasonable preventative maintenance is not performed.

5) Instruct users *not to* report failures of misapplied equipment.

6) Instruct users *not to* include equipment installed prior to January 1, 1968.

7) Instruct users to give "in-service" date (energized) of all equipment units, not just on the reported failures.

8) Define "failure" as "damage to equipment sufficiently severe to force an outage by either manual or automatic removal of voltage." (Keep in mind that failures caused by the conditions in 4) and 5) are not to be reported.)

*Part I:* There seemed to be a great deal of confusion by the respondents on the information desired for electric power supplies. Thus the published failure rates may be questionable. It is my opinion that the questionnaire form for this was too nondescript. Perhaps one way to clearly describe the power supplies on which information is desired would be to include on the form simple single-line diagrams of the more common types of utility services.

It is my opinion that the lack of response by many companies was due primarily to poor and/or nonexistent records. A major contributing cause may have been the massive amount of information asked for.

The Reliability Subcommittee's judgement that a minimum of 8 to 10 observed failures was required for "good" accuracy when estimating equipment failure rates seems reasonable.

The value chosen for the confidence interval (0.90) was a good choice. The inclusion of confidence limits curves (Fig. 1) adds measurably to the report.

I generally concur with the Subcommittee's discussion comments. Their discussion of some of the results presented in the tables reinforces my feeling that the survey was too broad in scope, and the information submitted by the plants too ambiguous for meaningful interpretation.

While the sample sizes would be made smaller, as a general rule I feel that equipment should be grouped by voltage class. For example, in Table 2 one grouping of cable terminations is for 601–15 000 V. In this instance it would be especially helpful to know the failure rate on 15-kV cable terminations alone.

*Part II:* As stated in my general comments, I feel that it is not practical to generate reasonably accurate information of these types.

The bases for the units used in cost calculations, dollars per kilowatt plus dollars per killowatthour, are somewhat confusing. Clarification of this would be helpful.

In the Subcommittee's discussion of the cost of power outages, item 2), I must disagree with their thought that electrochemical or heating processes tend to have low outage costs because heat not supplied now can be supplied later.

In the discussion of loads lost versus time of power outage the "time" factor is questionable. Most plants are not equipped to measure short-duration power outages (cycles or even seconds).

*Part III:* Many of the information types in this part are very important. Some, I feel, are not. I suggest that the questions on failure repair method; failure repair urgency; failure, months since maintenance; and suspected failure responsibility be omitted from future surveys. The remaining types of information may be refined using knowledge gained from this survey.

In the Subcommittee's Summary of Conclusions they report that transient overvoltages were a major cause of failure in equipment such as, for example, transformers and circuit breakers; but I got the impression that much of this was speculation on the part of those responding. The possibility of transient overvoltage should be considered in the investigation of most equipment failures, and IEEE could perform an important service to industry by developing a socalled "evaluation of possibility of transient overvoltage contribution to equipment failures" guide.

**Stanley Wells** (Union Carbide Corporation, Port Lavaca, Tex. 77979): The Reliability Subcommittee should be congratulated for performing such a comprehensive reliability survey of industrial plants and for providing a very thorough report.

I would like to limit my discussion to Part 3 and, in particular, the preventive maintenance effect on the failure rate. A preventive maintenance program can very definitely have a direct effect on the failure rate of electrical equipment. In the modern automated plant of today, production demands and losses associated with downtime influence maintenance schedules. Equipment is often allowed to remain in operation for periods that exceed desired preventive maintenance time schedules. It is interesting to note that the survey indicates that preventive maintenance can be performed, yet equipment failures occur within a time period which is less than 12 months since preventive maintenance was performed. Our first attempt at a preventive maintenance program met with the same results. The program was reviewed in depth and it was found that it was inadequate and that the preventive maintenance procedures and time schedules should be reviewed and correlated with our failure experience. As experience was gained, the equipment preventive maintenance program developed into a very useful tool to practically eliminate electrical equipment failure. We soon recognized that where preventive maintenance periods were over 24 months or where no preventive maintenance at all was performed, chances of failure were extremely high. This fact is born out in the results of this survey. Table 35, "Failure–Months Since Maintained," has been rearranged to show that a large reduction in failures may be possible if preventive maintenance periods are on a 12- to 18-month basis (Table B).

Let's define preventive maintenance. Preventive maintenance is a system of routine inspections designed to minimize or forestall future equipment operating problems or failures, and which may, depending upon equipment type, require equipment exercising or proof testing. From this definition, the four following items listed under Table 38, "Suspected Failure Responsibility," can be considered a definite part of a maintenance program:

1) manufacture, defective components (locate by inspection or test);
2) application engineering, improper application;
3) inadequate installation and testing prior to start-up (proof test);
4) inadequate maintenance.

It is interesting to note that the survey indicates that these four items are responsible for a very large percentage of failures. The total for each category is listed below.

| | Percent |
|---|---|
| Transformers | 55 |
| Circuit breakers | 53 |
| Motor starters | 77 |
| Motors | 42 |
| Generators | 41 |
| Disconnect switches | 52 |
| Switchgear bus insulated | 95 |
| Switchgear bus uninsulated | 52 |
| Bus duct | 63 |
| Open wire | 41 |
| Cable | 48 |
| Cable joints | 68 |
| Cable terminations | 79 |

To increase the electrical system reliability, each failure should be very carefully analyzed to determine the failure cause, and corrective action to prevent additional failures should be applied to all applicable equipment.

Copyright © 1998 IEEE. All rights reserved.

TABLE B
FAILURES

| | Less than 12 Months Ago Preventive Maintenance | 12 Months or More or No Preventive Maintenance |
|---|---|---|
| Transformers | 34 | 65 |
| Circuit breakers | 18 | 81 |
| Motor starters | 67 | 33 |
| Motors | 22 | 78 |
| Generators | 58 | 42 |
| Disconnect switch | 8 | 92 |
| Switchgear bus insulated | 10 | 90 |
| Switchgear bus uninsulated | 35 | 65 |
| Bus duct | 25 | 75 |
| Open wire | 1 | 98 |
| Cable | 11 | 89 |
| Cable joint | 18 | 82 |
| Cable terminations | 12 | 88 |

**R. E. Kuehn** (IEEE Reliability Group): The reliability, maintainability, and downtime logistics in the power area is very important and should lend itself to cost analysis, which is the ultimate judge of the value of reliability and maintainability programs. A great deal of data have been analyzed with all the obvious advantages and disadvantages that are entailed in such a data base. Parts 1 and 2 present me with a severe problem as a reliability professional and manager. In both papers a large effort was spent indicating that the survey results do not agree with what the engineering judgment says the results should be; for example, the discussion of Part 1 on motors, generators, cable, and switchgear bus. My quandary is that if I accept your judgment in all logic, I must question the validity of all the data collected, not just for motors, generators, cable, and switchgear bus. A possible procedure would have been to test the hypothesis that a part of the data was significantly different enough from the total grouped data to justify its rejection as part of the group data.

I would like to recommend analysis of variance or multiple regression in analyzing the data. It would appear that a number of possible variables exist and their effects are suitable for quantization. These procedures are covered in [1]–[4].

## REFERENCES

[1] R. G. Stokes and F. N. Sehle, "Some life-cycle cost estimates for electronic equipments," in *Proc. 1968 Annu. Symp. on Reliability*, pp. 169–183.

[2] B. L. Retterer, "State of art assessment of reliability and maintainability as applied to ship systems," in *Proc. 1969 Annu. Symp. on Reliability*, pp. 133–145.

[3] H. Dagen, "Multiple regression," in *Proc. 1972 Annu. Symp. on Reliability*," pp. 51–58.

[4] "Cost effectiveness evaluation procedures for shipboard electronic equipment," ARINC Research Publ. 509-01-2-564 and 541-01-1-766.



Copyright © 1998 IEEE. All rights reserved.

**Tai C. Wong** (American Electric Power Service Corporation, New York, N.Y. 10004): The members of the Reliability Subcommittee are to be commended for conducting and analyzing the results of a survey that covers so many elements in industrial power systems.

Perhaps the authors want to clarify why the chi-squared distribution was used in fitting the data and what kind of statistical testing technique was employed to ensure the adequacy of the distribution chosen. The authors did compare the results of the recent survey against those obtained in 1962. The readers should be warned that this is only an observation based on empirical data and that any inference of a trend in the equipment reliability may not be valid. The paper indicates that many of the reported data cover more than one year of operating experience. Because the first survey was conducted twelve years ago, it is felt that the number of years that the different equipments were in service should be published (or the data collected during the next survey if they are not yet available) so that the reader can have a better understanding of the data background when he has to draw further conclusions, beyond the tables presented.

The authors indicated that the purpose of this survey is to make possible the quantitative reliability comparisons between alternative designs of new systems and then use this information in cost–reliability tradeoff studies to determine which type of power distribution system to use. It appears that the authors focus on making the economic tradeoff comparisons based on the available system components at a given time. However, the authors pointed out that the product of failure rate times the average downtime per failure is almost the same in 1973 as in 1962. Perhaps the equipment manufacturers and the industries can establish more dialogues, leading to an answer to the following two questions.

1) Should the equipments have a lower failure rate, but when failing, take longer to repair? or

2) Should the equipments have a higher failure rate, but when failing, need shorter repair time?

In a few instances during the survey, the respondents misinterpreted either the question(s) and/or the definition of the terms, thus leading to unreliable or biased results. This is especially true in the area of preventive maintenance. I might suggest that during the next survey 1) the definition of all terms that are likely to cause confusion in the questionnaire be included, 2) a pilot survey be instituted and any necessary modifications be made to the questionnaire before a full-scale survey is launched, or 3) the survey form be sent out without requesting data, but instead requesting the respondent's interpretations of the questions and the terms used. Then the survey form may be redesigned and data requested.

**I. O. Sunderman** (Lincoln Electric System, Lincoln, Nebr.): The authors have presented an interesting cross section of costs involved with industrial electric equipment downtime as accumulated by the computer. The data are to be utilized by interested parties in the choice of a reliability design for industrial power distribution systems. The wide range of costs as split into the two parts over 1000 kW and under 1000 kW suggests consideration of other kW brackets at 500, 2500, 5000, 7500, 10 000 kW, etc. The sufficiency of data will dictate breaking points, as the author already questions the cost data below 1000 kW.

In Part 3 the authors have reviewed and presented in excellent tables the results of electric equipment outage reports and repair. It must have been disturbing to note the numerous "other than categories classified." Perhaps further reporting on the "other" category comments, if available, would bring additional results to light.

**IEEE Reliability Subcommittee:** The authors wish to thank those who presented discussions on these three papers. Some of the suggestions given can be considered for incorporation into future surveys and they can also be used in the analysis of the results.

Several discussers have raised the question about the effect of "in service date" or age on the reliability of electrical equipment. Population data were collected on the average age of equipment in service; these will be published in Part 4. However, the Reliability Subcommittee did not request these data in the survey questionnaire on equipment failures. This subject was considered by the Subcommittee when making up the questionnaire; it was not included because this would have added additional complications to a questionnaire that was already considered too long. This meant that the assumption was made that the failure rate was constant with age. Thus a chi-squared distribution is appropriate for use in calculating the confidence limits of the failure rate. The assumption of a constant failure rate with age can be justified for most electrical equipment based upon reliability surveys made by others.

Mr. Becker and Mr. Beard have raised questions about the accuracy of the cost of power outage data and the attempt to relate it to kilowatts and kilowatthours. Information was collected but not published on the estimated plant outage costs 1) per failure and 2) per hour of downtime. The authors consider that the cost of power outages is an important factor that should be considered in the design of power distribution systems for industrial plants. Since power distribution systems are designed on the basis of kilowatt capacity and kilowatthour of delivered energy, it was felt that it is necessary to attempt to relate the cost of power outages to these two parameters. The approach used by the Reliability Subcommittee is the same as that which has been used by electric power companies in several European countries. The survey result of the median cost of 83¢ per kilowatthour of undelivered energy is in the same range as values obtained from surveys that have been made in Sweden, Norway, France, Italy, and West Germany. The authors agree that the published data of the cost of power outages are more meaningful if related to specific types of plants.

The authors acknowledge Mr. Beard's suggestion that a one-line diagram should be used in the survey of the electric utility supply. A new survey of the electric utility supply is being started, and Mr. Beard's suggestion will be included. This new survey should clear up the problem of the questionable accuracy mentioned by Mr. Beard. The authors acknowledge Mr. Beard's comment questioning the accuracy of the "time" factor in loads lost versus time of power outage in Table 30.

In answer to several questions raised by Mr. Krasnodebski, the authors make the following comments.

1) The failure rates are based upon a calendar year of 8760 h, not upon an operating time, which could be less and would thus result in a higher failure rate than reported in the survey.

2) The failures of circuit breakers are meant to include the auxiliaries.

3) The failure modes of circuit breakers are included in Table 41; this includes "fail to close," "fail to open," etc. However, data were not collected on the number of circuit breaker operations.

4) The Reliability Subcommittee does not consider that it would be appropriate for a technical society such as IEEE to collect and publish reliability data by name of manufacturer.

5) The authors agree that better record keeping of failures would improve survey results. It is expected that future surveys will cover only a few categories of electrical equipment that are considered trouble areas.

6) The authors acknowledge the logic in the very interesting comments made on synchronous motors and switchgear bus and generators.

7) The steam turbine generators in industrial plants probably have constant operation and thus could be expected to have a much lower failure rate than 60–89 MW units in utility applications where the operation was cyclical.

The authors wish to thank Mr. Kuehn for his suggestions in analyzing the data. These suggestions included 1) test hypothesis that part of data can be rejected, and 2) analysis of variance or multiple regression. Mr. Becker has raised a point where this approach for analyzing the data could possibly be tried. Mr. Becker feels that the survey results are too high on the downtime per failure of a single-circuit electric utility supply. This may be true for his system, but perhaps other utilities are not as good as his company's system.

Mr. Wong has raised a warning about drawing the conclusion that equipment reliability has improved since the previous survey conducted 11 to 12 years earlier. A separate paper has been prepared on this subject and will be published in the near future. This paper contains the conclusion that the failure rate of electrical equipment has shown a definite trend of improvement during the 12-year interval.

The authors wish to thank Mr. Wells for his discussion on preventive maintenance. A lot more data on preventive maintenance are being processed and will be included in Part 4. Mr. Wells' Table B shows more failures in the "12 months or more" category than for the "less than 12 months ago" category. The authors would like to point out that the electrical equipment has more unit-years of exposure in the "12 months or more" category and thus could be expected to have more failures. Thus it is not possible to conclude that more frequent preventive maintenance will reduce the failure rate. The Reliability Subcommittee is investigating this subject in further detail and will publish the results in Part 4.

Copyright © 1998 IEEE. All rights reserved.

This page is intentionally blank

# Appendix B

# Report on Reliability Survey of Industrial Plants

## Part 4
## Additional Detailed Tabulation of Some Data Previously Reported in the First Three Parts

## Part 5
## Plant Climate, Atmosphere, and Operating Schedule, the Average Age of Electrical Equipment, Percent Production Lost, and the Method of Restoring Electrical Service After a Failure

## Part 6
## Maintenance Quality of Electrical Equipment


By
Reliability Subcommittee
Industrial and Commercial Power Systems Committee
IEEE Industry Applications Society

**A. D. Patton**, *Chair*

C. E. Becker
W. H. Dickinson
P. E. Gannon
C. R. Heising
D. W. McWilliams
R. W. Parisian
S. J. Wells



**Industrial and Commercial Power Systems Technical Conference**
**Institute of Electrical and Electronics Engineers, Inc.**
**Denver, Colorado**
**Jun. 3-6, 1974**

Also Published
*IEEE Transactions on Industry Applications*
Jul./Aug. and Sep./Oct. 1974
Part 4, pp. 456-462
Part 5, pp. 463-466
Part 6, pp. 467-468, 681, 469-476

Reprinted from pp. 113-136
in 74CHO855-71A, 1974 I&CPS Technical Conference


Copyright © 1998 IEEE. All rights reserved.

This page is intentionally blank

# Report on Reliability Survey of Industrial Plants, Part IV: Additional Detailed Tabulation of Some Data Previously Reported in the First Three Parts

IEEE COMMITTEE REPORT

*Abstract*—**An IEEE sponsored reliability survey of industrial plants was completed during 1972. This survey included 30 companies covering a total of 68 industrial plants in the United States and Canada. Additional detailed results are reported on some data that were previously reported in the first three parts. This includes failure modes of circuit breakers, cost of power outages, critical service loss duration time, loss of motor load versus time of power outage, and the effect of failure repair method and repair urgency on the average downtime per failure of electrical equipment. This information is useful in the design of industrial power distribution systems.**

## INTRODUCTION AND RESULTS

DURING 1972 the Reliability Subcommittee of the Industrial and Commercial Power Systems Committee completed a reliability survey of industrial plants. This paper presents Part IV of the results from the survey. The first three parts [1]–[3] were published previously. Some of the data in the first three parts caused questions to be raised about the possibility of obtaining additional details. These additional details are being reported in this paper and include the following results.

*Table 43* gives failure modes of circuit breakers, including

1) metalclad drawout
   a) 0–600 V
   b) 601–15 000 V
   c) all voltages
2) fixed type (includes molded case)
   a) 0–600 V
   b) all voltages.

*Tables 44, 45* give cost of power outages, adding 25 and 75 percentile data to what was previously published.

*Table 46* gives critical service loss duration time (maximum length of power failure that will not stop plant production), adding 10, 25, 75, and 90 percentile data to what was previously published.

Paper TOD-74-33, approved by the Industrial and Commercial Power Systems Committee of the IEEE Industry Applications Society for presentation at the 1974 Industrial and Commercial Power Systems Technical Conference, Denver, Colo., June 2–6. Manuscript released for publication April 15, 1974.

Members of the Reliability Subcommittee of the IEEE Industrial and Commercial Power Systems Committee are A. D. Patton, *Chairman*, C. E. Becker, W. H. Dickinson, P. E. Gannon, C. R. Heising, D. W. McWilliams, R. W. Parisian, and S. Wells.

*Table 47* lists loss of motor load versus time of power outage, adding the following length of power outage categories:

1) 10 to 15 cycles
2) 15+ to 30 cycles
3) 0.5+ to 2.0 s
4) 2+ to 4.0 s
5) >4.0 s.

*Tables 48 through 56* report the effect of failure repair method and failure repair urgency on the average downtime per failure for the following equipment categories:

1) transformers—liquid filled
   a) 601–15 000 V
   b) above 15 000 V
2) circuit breakers—metalclad drawout
   a) 0–600 V
   b) above 600 V
3) motors
   a) induction, 0–600 V
   b) induction, 601–15 000 V
   c) synchronous, 601–15 000 V
4) cable
   a) above ground and aerial, 601–15 000 V
   b) below ground and direct burial, 601–15 000 V

In each of the Tables 43 through 56 reference is made to the tables in Parts I, II, and III where previous results had been reported.

## DISCUSSION—FAILURE MODES OF CIRCUIT BREAKERS

The data on failure modes of circuit breakers given in Table 43 show some very interesting results.

### *Circuit Breakers, 0–600 V*

71 percent of the failures of metalclad drawout circuit breakers were "opened when it shouldn't" versus 5 percent of the failures for fixed-type circuit breakers (includes molded case). 77 percent of the failures of fixed-type circuit breakers (includes molded case) were "failed while operating (not while opening or closing)," and only 10 percent of the metalclad drawout failures included this failure mode.

None of the failures reported for either type of circuit breaker were "failed while opening." Only 9 percent and

Copyright © 1998 IEEE. All rights reserved.

TABLE 43 - FAILURE MODES OF CIRCUIT BREAKERS - Percent of Total Failures in Each Failure Mode
(Data Previously Reported in Tables 5 and 41)

| All Circuit Breakers | Metalclad Drawout-All | Metalclad Drawout-601-15,000 Volts | Metalclad Drawout-0-600 Volts All Sizes | *Fixed Type 0-600 Volts All Sizes | *Fixed Type-All | Card-Type 3, Col. 46 |
|---|---|---|---|---|---|---|
| % | % | % | % | % | % | FAILURE CHARACTERISTIC |
| 5 | 5 | 2 | 7 | 8 | 6 | Failed to close when it should |
| 9 | 12 | 21 | 0 | 0 | 2 | Failed while opening |
| 42 | 58 | 49 | 71 | 5 | 4 | Opened when it shouldn't |
| 7 | 6 | 4 | 9 | 5 | 4 | Damaged while successfully opening |
| 2 | 1 | 0 | 0 | 0 | 4 | Damaged while closing |
| 32 | 16 | 24 | 10 | 77 | 73 | Failed while operating (not while opening or closing) |
| 1 | 0 | 0 | 0 | 0 | 2 | Failed during testing or maintenance |
| 1 | 2 | 0 | 3 | 0 | 0 | Damage discovered during testing or maintenance |
| 1 | 0 | 0 | 0 | 5 | 5 | Other |
| 100% | 100% | 100% | 100% | 100% | 100% | Total Percent |
| - | 117 | 53 | 59 | 39 | 48 | Number of Failures in Total Percent |
| - | 7 | 0 | 7 | 1 | 1 | Number Not Reported in Col. 46, Card-Type 3 |
| - | 124 | - | 66 | 40 | 49 | Total Failures in Table 5 |

*Includes molded case





Copyright © 1998 IEEE. All rights reserved.

5 percent, respectively, of the failures were "damaged while successfully opening." Only 7 to 8 percent of the failures were "failed to close when it should."

It appears that the dominate failure mode for metalclad drawout circuit breakers, 0–600 V, is "opened when it shouldn't." It is possible that some of these failures were external to the breaker and of unknown cause and were blamed on the breaker. Some of these may have been due to improper setting of the trip current.

The dominate failure mode for fixed-type circuit breakers (includes molded case), 0–600 V, is "failed while operating (not while opening or closing)."

*Metalclad Drawout Circuit Breakers, 601–15 000 V*

Metal drawout circuit breakers, 601–15 000 V, had 21 percent of the failures classified as "failed while opening" and 4 percent classified as "damaged while successfully opening." Another 24 percent of the failures were classified as "failed while operating (not while opening or closing)." 49 percent of the failures were classified as "opened when it shouldn't;" it is suspected that some of these may have been due to improper setting of the trip current.

It appears that metalclad drawout circuit breakers, 601–15 000 V, have about half of their failures as "opened when it shouldn't" and the other half as "failed while operating or while opening."

## DISCUSSION—LOSS OF MOTOR LOAD VERSUS TIME OF POWER OUTAGE

The data on loss of motor load shown in Table 47 indicate that for power outages greater than 10 cycles duration most of the plants lose the motor load. However, for power outages between 1 to 10 cycles duration, only about half as many lose the motor load. Thus, power outages of less than 10 cycles duration may often not result in losing the motor load.

There were many power outages of more than 4.0 s duration, and 35 percent did not lose motor load. It is suspected that many of these did not have a motor load. Some may have had a duplicate feed and thus did not lose the motor load.

## DISCUSSION—EFFECT OF FAILURE REPAIR METHOD AND FAILURE REPAIR URGENCY ON AVERAGE HOURS DOWNTIME PER FAILURE

Data were given in Part I on the average hours downtime per failure for 74 categories of electrical equipment. It is known that the downtime after a failure can be affected to a large extent by the failure repair method and the failure repair urgency. The failure repair method includes either repair of the failed component or else replacement with a spare. Some data were given in Tables 33 and 34 of Part III on the failure repair method and the failure repair urgency for whole classes of electrical equipment.

A more detailed study is reported in Tables 48–56 of this paper on the effect of the failure repair method and the failure repair urgency on the average hours downtime per failure. This is only reported for 9 electrical equipment categories, rather than the 74 categories given in Part I. These 9 electrical equipment categories were selected because an adequate sample size existed of the number of failures and because the average downtime per failure was effected significantly by the failure repair method and/or the failure repair urgency.

Copyright © 1998 IEEE. All rights reserved.

TABLE 44 - PLANT OUTAGE COST PER FAILURE PER kW OF MAXIMUM DEMAND ($ per kW)
All Industry - USA & Canada
(Data Previously Reported in Tables 22, 24 and 26)

| Plant Size | Number of Plants Reporting | Minimum | 25% Percentile | Median | 75% Percentile | Maximum | Average |
|---|---|---|---|---|---|---|---|
| All Plants | 42 | .002 | .17 | .69 | 2.55 | 10.00 | 1.89 |
| Plants > 1000 kW Max. Demand | 32 | .002 | .09 | .32 | 1.31 | 7.50 | 1.05 |
| Plants < 1000 kW Max. Demand | 10 | .50 | 1.71 | 3.68 | 8.27 | 10.00 | 4.59 |

TABLE 45 - PLANT OUTAGE COST PER HR. DOWNTIME PER kW OF MAXIMUM DEMAND ($ per kWh)
All Industry - USA & Canada
(Data Previously Reported in Tables 23, 25 and 27)

| Plant Size | Number of Plants Reporting | Minimum | 25% Percentile | Median | 75% Percentile | Maximum | Average |
|---|---|---|---|---|---|---|---|
| All Plants | 41 | .0009 | .18 | .83 | 2.71 | 27.00 | 2.68 |
| Plants > 1000 kW Max. Demand | 31 | .0009 | .12 | .36 | 1.20 | 5.77 | .94 |
| Plants < 1000 kW Max. Demand | 10 | .86 | 1.83 | 4.42 | 12.50 | 27.00 | 8.11 |



Copyright © 1998 IEEE. All rights reserved.

TABLE 46 - CRITICAL SERVICE LOSS DURATION (Maximum Length of Power Failure that Will Not Stop Plant Production)
(Data Previously Reported in Table 29)

| Industry | Number of Plants Reporting | Average | 10% Percentile | 25% Percentile | Median | 75% Percentile | 90% Percentile |
|---|---|---|---|---|---|---|---|
| All Industry - USA & Canada | 55 | 12.6 min. | 5.0 cycles | 10.0 cycles | 10.0 sec. | 15.0 min. | 60.0 min. |
| Chemical | 20 | 4.56 min. | 3.2 cycles | 8.5 cycles | 1.25 sec. | 5.0 min. | 28.5 min. |

TABLE 47 - LOSS OF MOTOR LOAD VERSUS TIME OF POWER OUTAGE
Tabulation of the Percentage of Equipment Failures for Which the Motor Load was Lost
(Data Previously Reported in Table 30)

| Length of Equipment Failure | Number of Failures Reported | TYPE OF LOAD LOST | | |
|---|---|---|---|---|
| | | Motor | | |
| | | Yes | No | Not Known |
| 1 cycle or less | 0 | 0% | 0% | 0% |
| 1+ to 10- cycles | - | 33% | 67% | 0% |
| 10 to 15 cycles | 7 | 86% | 14% | 0% |
| 15+ to 30 cycles | 28 | 96% | 4% | 0% |
| 0.5+ to 2.0 sec. | 30 | 77% | 13% | 10% |
| 2.0+ to 4.0 sec. | 10 | 100% | 0% | 0% |
| >4.0 second | 998 | 64% | 35% | 0% |

Copyright © 1998 IEEE. All rights reserved.

TABLE 48 TRANSFORMERS-LIQUID FILLED, 601-15,000 VOLTS
EFFECT OF FAILURE REPAIR METHOD AND FAILURE REPAIR URGENCY
ON THE AVERAGE HOURS DOWNTIME PER FAILURE
(Previous Data Given in Tables 4, 33 and 34)

| FAILURE REPAIR METHOD | | | FAILURE REPAIR METHOD | | |
|---|---|---|---|---|---|
| Repair | Replace with Spare | Total | Repair | Replace with Spare | |
| Number of Failures | | | Average Hours Downtime per Failure | | FAILURE REPAIR URGENCY |
| 4 | 22 | 26 | * | 130 | 1. Requiring round-the-clock all out efforts |
| 10 | 3 | 13 | 342 | * | 2. Requiring repair work only during regular workday, perhaps with some overtime |
| 0 | 0 | 0 | - | - | 3. Requiring repair work on a non-priority basis |
| 14 | 25 | 39 | Average 174. Hours | | Total |

*Small Sample Size

TABLE 49 - TRANSFORMERS-LIQUID FILLED, ABOVE 15,000 VOLTS
EFFECT OF FAILURE REPAIR METHOD AND FAILURE REPAIR URGENCY
ON THE AVERAGE HOURS DOWNTIME PER FAILURE
(Previous Data Given in Tables 4, 33 and 34)

| FAILURE REPAIR METHOD | | | FAILURE REPAIR METHOD | | |
|---|---|---|---|---|---|
| Repair | Replace with Spare | Total | Repair | Replace with Spare | |
| Number of Failures | | | Average Hours Downtime per Failure | | FAILURE REPAIR URGENCY |
| 2 | 5 | 7 | * | * | 1. Requiring round-the-clock all out efforts |
| 12 | 4 | 16 | 1842 | * | 2. Requiring repair work only during regular workday, perhaps with some overtime |
| 0 | 1 | 1 | - | * | 3. Requiring repair work on a non-priority basis |
| 14 | 10 | 24 | Average 1076. Hours | | Total |

*Small Sample Size



Copyright © 1998 IEEE. All rights reserved.

TABLE 50 - CIRCUIT BREAKERS - METALCLAD DRAWOUT, 0-600 VOLTS
EFFECT OF FAILURE REPAIR METHOD AND FAILURE REPAIR URGENCY
ON THE AVERAGE HOURS DOWNTIME PER FAILURE
(Previous Data Given in Tables 5, 33 and 34)

| FAILURE REPAIR METHOD | | | FAILURE REPAIR METHOD | | |
|---|---|---|---|---|---|
| Repair | Replace with Spare | Total | Repair | Replace with Spare | |
| Number of Failures | | | Average Hours Downtime per Failure | | FAILURE REPAIR URGENCY |
| 31 | 19 | 50 | 3.3 | 3.8 | 1. Requiring round-the-clock all out efforts |
| 6 | 1 | 7 | * | * | 2. Requiring repair work only during regular workday, perhaps with some overtime |
| 8 | 1 | 9 | * | * | 3. Requiring repair work on a non-priority basis |
| 45 | 21 | 66 | Average 147. Hours | | Total |

*Small Sample Size

TABLE 51 - CIRCUIT BREAKERS - METALCLAD DRAWOUT, ABOVE 600 VOLTS
EFFECT OF FAILURE REPAIR METHOD AND FAILURE REPAIR URGENCY
ON THE AVERAGE HOURS DOWNTIME PER FAILURE
(Previous Data Given in Tables 5, 33 and 34)

| FAILURE REPAIR METHOD | | | FAILURE REPAIR METHOD | | |
|---|---|---|---|---|---|
| Repair | Replace with Spare | Total | Repair | Replace with Spare | |
| Number of Failures | | | Average Hours Downtime per Failure | | FAILURE REPAIR URGENCY |
| 34 | 12 | 46 | 83.1 | 2.1 | 1. Requiring round-the-clock all out efforts |
| 3 | 9 | 12 | * | * | 2. Requiring repair work only during regular workday, perhaps with some overtime |
| 0 | 0 | 0 | - | - | 3. Requiring repair work on a non-priority basis |
| 37 | 21 | 58 | Average 109. Hours | | Total |

*Small Sample Size

Copyright © 1998 IEEE. All rights reserved.

TABLE 52 - MOTORS - INDUCTION, 0-600 VOLTS
EFFECT OF FAILURE REPAIR METHOD AND FAILURE REPAIR URGENCY
ON THE AVERAGE HOURS DOWNTIME PER FAILURE
(Previous Data Given in Tables 7, 33 and 34)

| FAILURE REPAIR METHOD | | | FAILURE REPAIR METHOD | | |
|---|---|---|---|---|---|
| Repair | Replace with Spare | Total | Repair | Replace with Spare | |
| Number of Failures | | | Average Hours Downtime per Failure | | FAILURE REPAIR URGENCY |
| 12 | 19 | 31 | 44.7 | 6.6 | 1. Requiring round-the-clock all out efforts |
| 175 | 2 | 177 | 123 | * | 2. Requiring repair work only during regular workday, perhaps with some overtime |
| 0 | 5 | 5 | - | * | 3. Requiring repair work on a non-priority basis |
| 187 | 26 | 213 | Average 114. Hours | | Total |

*Small Sample Size

TABLE 53 - MOTORS - INDUCTION, 601-15,000 VOLTS
EFFECT OF FAILURE REPAIR METHOD AND FAILURE REPAIR URGENCY
ON THE AVERAGE HOURS DOWNTIME PER FAILURE
(Previous Data Given in Tables 7, 33 and 34)

| FAILURE REPAIR METHOD | | | FAILURE REPAIR METHOD | | |
|---|---|---|---|---|---|
| Repair | Replace with Spare | Total | Repair | Replace with Spare | |
| Number of Failures | | | Average Hours Downtime per Failure | | FAILURE REPAIR URGENCY |
| 14 | 10 | 24 | 88.1 | * | 1. Requiring round-the-clock all out efforts |
| 93 | 48 | 141 | 83.6 | 34.7 | 2. Requiring repair work only during regular workday, perhaps with some overtime |
| 6 | 0 | 6 | * | - | 3. Requiring repair work on a non-priority basis |
| 113 | 58 | 171 | Average 76. Hours | | Total |

*Small Sample Size





Copyright © 1998 IEEE. All rights reserved.

TABLE 54 - MOTORS - SYNCHRONOUS, 601 - 15,000 VOLTS
EFFECT OF FAILURE REPAIR METHOD AND FAILURE REPAIR URGENCY
ON THE AVERAGE HOURS DOWNTIME PER FAILURE
(Previous Data Given in Tables 7, 33 and 34)

| FAILURE REPAIR METHOD | | | FAILURE REPAIR METHOD | | |
|---|---|---|---|---|---|
| Repair | Replace with Spare | Total | Repair | Replace with Spare | |
| Number of Failures | | | Average Hours Downtime per Failure | | FAILURE REPAIR URGENCY |
| 28 | 2 | 30 | 198 | * | 1. Requiring round-the-clock all out efforts |
| 55 | 8 | 63 | 201 | * | 2. Requiring repair work only during regular workday, perhaps with some overtime |
| 1 | 0 | 1 | * | - | 3. Requiring repair work on a non-priority basis |
| 84 | 10 | 94 | Average 175. Hours | | Total |

*Small Sample Size

TABLE 55 - CABLE - ABOVE GROUND & AERIAL, 601-15,000 VOLTS
EFFECT OF FAILURE REPAIR METHOD AND FAILURE REPAIR URGENCY
ON THE AVERAGE HOURS DOWNTIME PER FAILURE
(Previous Data Given in Tables 13, 33 and 34)

| FAILURE REPAIR METHOD | | | FAILURE REPAIR METHOD | | |
|---|---|---|---|---|---|
| Repair | Replace with Spare | Total | Repair | Replace with Spare | |
| Number of Failures | | | Average Hours Downtime per Failure | | FAILURE REPAIR URGENCY |
| 46 | 4 | 50 | 9.0 | * | 1. Requiring round-the-clock all out efforts |
| 11 | 8 | 19 | * | * | 2. Requiring repair work only during regular workday, perhaps with some overtime |
| 2 | 2 | 4 | * | * | 3. Requiring repair work on a non-priority basis |
| 59 | 14 | 73 | Average 40.4 Hours | | Total |

*Small Sample Size

Copyright © 1998 IEEE. All rights reserved.

TABLE 56 - CABLE - BELOW GROUND & DIRECT BURIAL, 601-15,000 VOLTS
EFFECT OF FAILURE REPAIR METHOD AND FAILURE REPAIR URGENCY
ON THE AVERAGE HOURS DOWNTIME PER FAILURE
(Previous Data Given in Tables 13, 33 and 34)

| FAILURE REPAIR METHOD | | | FAILURE REPAIR METHOD | | FAILURE REPAIR URGENCY |
|---|---|---|---|---|---|
| Repair | Replace with Spare | Total | Repair | Replace with Spare | |
| Number of Failures | | | Average Hours Downtime per Failure | | |
| 17 | 57 | 74 | 26.5 | 19.0 | 1. Requiring round-the-clock all out efforts |
| 2 | 33 | 35 | * | 77.8 | 2. Requiring repair work only during regular workday, perhaps with some overtime |
| 3 | 3 | 6 | * | * | 3. Requiring repair work on a non-priority basis |
| 22 | 93 | 115 | Average 95.5 Hours | | Total |

*Small Sample Size

In several cases there is a disparity in the downtime between the "average" and the cases where work is done "round the clock." When making availability calculations, this should be considered when deciding what value to use for the downtime after a failure.

*Transformers, Liquid Filled*

Transformers, above 15 000 V, had an average downtime per failure of 1842 h when sent out for repair without round-the-clock urgency. This compares with an overall average of 1076 h for all outage times, which included several cases of replacement with a spare. Thus it can be concluded that repair gives a much longer outage time than replacement with a spare for transformers, above 15 000 V.

Transformers, 601–15 000 V, had an average downtime per failure of 342 h when sent out for repair without round-the-clock urgency. This compares with 130 h for replacement with a spare while working round the clock. Thus it can be concluded that repair gives a much longer outage time for transformers, 601–15 000 V, than replacement with a spare while working round the clock.

*Circuit Breakers, Metalclad Drawout*

Metalclad drawout circuit breakers, 0–600 V, had an average downtime per failure of 3.3 h to 3.8 h when fixing the failure with round-the-clock efforts. This compares with an overall average of 147 h for all outage times. Thus it can be concluded that 24 percent of the outages of metalclad drawout circuit breakers, 0–600 V, had low urgency for fixing the failure, and that these 24 percent of the failures resulted in increasing the average downtime per failure from 3.8 h to 147 h.

Metalclad drawout circuit breakers above 600 V, had an average downtime per failure of 109 h for all outages. However, when round-the-clock effort was applied it only took 83 h for repair and only took 2.1 h for replacement with a spare. This shows that it is possible to reduce the downtime by having a spare and working round the clock when fixing metalclad drawout circuit breakers, above 600 V.

*Motors*

Most users of synchronous motors, 601–15 000 V, did not have a spare. Thus the average downtime per failure was 175 h for all failures.

Induction motors, 601–15 000 V, had an average downtime per failure of 35 h for replacement with a spare, compared to 84 to 88 h for repair. Induction motors, 0–600 V, had an average downtime per failure of 6.6 h for replacement with a spare while working round the clock. This compares with 123 h for repair and not working round the clock.

*Cables*

Cables, above ground and aerial, 601–15 000 V, had an average downtime per failure of 9 h for repair when working round the clock. This compares with 40 h for all failures. This shows that it is possible to reduce the downtime by working round the clock when fixing cables, above ground and aerial, 601–15 000 V.

Cables, below ground and direct burial, 601–15 000 V, had an average downtime per failure of 96 h for all failures. However, this was only 19 to 27 h when working round the clock. This shows that it is possible to reduce the downtime by working round the clock when fixing cables, below ground and direct burial, 601–15 000 V.

## DISCUSSION—COST OF POWER OUTAGES

Data are given in Tables 44 and 45 on the cost of power outages to industrial plants. This has added 25th and 75th percentile data to what had previously been reported in Part II. These were added because of the wide spread in the cost of power outages to industrial plants.

## REFERENCES

[1] W. H. Dickinson *et al.*, "Report on reliability survey of industrial plants, part I: Reliability of electrical equipment," *IEEE Trans. Ind. Appl.*, vol. IA-10, pp. 213-235, Mar./Apr. 1974.

[2] W. H. Dickinson *et al.*, "Report on reliability survey of industrial plants, part II: Cost of power outages, plant restart time, critical service loss duration time, and type of loads lost versus time of power outages," *IEEE Trans. Ind. Appl.*, vol. IA-10, pp. 236–241, Mar./Apr. 1974.

[3] W. H. Dickinson *et al.*, "Report on reliability survey of industrial plants, part III: Causes and types of failures of electrical equipment, the methods of repair, and the urgency of repair," *IEEE Trans. Ind. Appl.*, vol. 14-10, pp. 242–252, Mar./Apr. 1974.



Copyright © 1998 IEEE. All rights reserved.

# Report on Reliability Survey of Industrial Plants, Part V: Plant Climate, Atmosphere, and Operating Schedule, the Average Age of Electrical Equipment, Percent Production Lost, and the Method of Restoring Electrical Service after a Failure

IEEE COMMITTEE REPORT

*Abstract*—**An IEEE sponsored reliability survey of industrial plants was completed during 1972. This survey included the plant climate, atmosphere, and operating schedule, the average age of electrical equipment, percent production lost, and the method of restoring electrical service after a failure. The results are reported from the survey of 30 companies covering 68 plants in nine industries in the United States and Canada. This information is useful in the design of industrial power distribution systems.**

## INTRODUCTION AND RESULTS

DURING 1972 the Reliability Subcommittee of the Industrial and Commercial Power Systems Committee completed a reliability survey of industrial plants. This paper presents Part V of the results from the survey. The first three parts [1]–[3] were published previously; some of the data of lesser importance were not published at that time but are presented in this paper. Included in Part V are

Table 57—Failure Forewarning for Public Utility Power Interruption Only,
Table 58—Percent Production Lost,
Table 59—Method of Service Restoration,
Table 60—Average Age of Electrical Equipment,
Table 61—Plant Climate,
Table 62—Plant Atmosphere,
Table 63—Plant Operating Schedule.

These data are useful when using the results published in Parts I, II, III, IV [4], and VI [5]. This information is also useful in the design of industrial power distribution systems. The data on average age of electrical equipment and plant operating schedule provide answers to some points raised in the written discussion to Part I.

Paper TOD-74-33, approved by the Industrial and Commercial Power Systems Committee of the IEEE Industry Applications Society for presentation at the 1974 Industrial and Commercial Power Systems Technical Conference, Denver, Colo., June 2-6. Manuscript released for publication April 15, 1974.

Members of the Reliability Subcommittee of the IEEE Industrial and Commercial Power Systems Committee are A. D. Patton, *Chairman*, C. E. Becker, W. H. Dickinson, P. E. Gannon, C. R. Heising, D. W. McWilliams, R. W. Parisian, and S. Wells.

TABLE 57 - FAILURE FOREWARNING for PUBLIC UTILITY POWER INTERRUPTION ONLY

| Percent | Col. 25 Card-Type 3 |
|---|---|
| 97%<br>3%<br>— | 1. If no forewarning was given<br>2. If forewarning was given<br>For other types of failure, leave blank |
| 100% | Total Percent |
| 172 | Total Interruptions Reported |

## SURVEY FORM

The survey form is shown in Appendix A of Part I [1]. The information reported in this paper came from 1) card type 3, columns 25, 53, and 58; 2) card type 2, column 33; and 3) card type 1, columns 9–11 and 13. The definition of *failure* is given in Part I.

## RESPONSE TO SURVEY

A total of 30 companies responded to the survey questionnaire, reporting data covering 68 plants in nine industries in the United States and Canada. For the purpose of reporting results in this paper, Part V, the number of industries were reduced from nine down to five plus an "all other" category. The five industries selected were the ones for which equipment failure rate data were reported in Tables 3 through 19, Part I. All of the remaining industries were combined into an "all other" category in Tables 61–63 on plant climate, plant atmosphere, and plant operating schedule.

## DISCUSSION—FOREWARNING FOR PUBLIC UTILITY POWER INTERRUPTION

Only 3 percent of the time was a failure forewarning given for a public utility power interruption to the industrial plant. Data from Table 3, Part I, and Table 57, Part V, indicate that a large percentage of these interruptions were on double- or triple-circuit supplies. Forewarning can be important to plants with a single circuit. It can also be important to plants containing a double circuit with manual switchover.

Copyright © 1998 IEEE. All rights reserved.

TABLE 58 - PERCENT PRODUCTION LOST

| Col. 53 Card Type 3 Percent Production Lost | ELECTRIC UTILITY POWER SUPPLIES | % | TRANSFORMERS | % | CIRCUIT BREAKERS | % | MOTOR STARTERS | % | MOTORS | % | GENERATORS | % | DISCONNECT SWITCHES | % | SWITCHGEAR BUS-INSULATED | % | SWITCHGEAR BUS-BARE | % | BUS DUCT | % | OPEN WIRE | % | CABLE | % | CABLE JOINTS | % | CABLE TERMINATIONS | % |
|---|---|---|---|---|---|---|---|---|---|---|---|---|---|---|---|---|---|---|---|---|---|---|---|---|---|---|---|---|
| 0 None | 41 | | 22 | | 19 | | 85 | | 24 | | 80 | | 20 | | 20 | | 17 | | 30 | | 62 | | 28 | | 33 | | 47 | |
| 1 0-30 Percent | 32 | | 63 | | 73 | | 13 | | 73 | | 5 | | 75 | | 60 | | 33 | | 55 | | 25 | | 60 | | 58 | | 35 | |
| 2 Above 30 Percent | 27 | | 15 | | 8 | | 2 | | 3 | | 15 | | 5 | | 20 | | 50 | | 15 | | 13 | | 13 | | 9 | | 18 | |
| Total Percent | 100 | | 100 | | 100 | | 100 | | 100 | | 100 | | 100 | | 100 | | 100 | | 100 | | 100 | | 101 | | 100 | | 100 | |
| Total Failures Reported | 202 | | 101 | | 177 | | 168 | | 561 | | 85 | | 101 | | 20 | | 24 | | 20 | | 108 | | 223 | | 45 | | 51 | |



Copyright © 1998 IEEE. All rights reserved.

TABLE 59 - METHOD OF SERVICE RESTORATION

| TOTAL | ELECTRIC UTILITY POWER SUPPLIES | TRANSFORMERS | CIRCUIT BREAKERS | MOTOR STARTERS | MOTORS | GENERATORS | DISCONNECT SWITCHES | SWITCHGEAR BUS - INSULATED | SWITCHGEAR BUS - BARE | BUS DUCT | OPEN WIRE | CABLE | CABLE JOINTS | CABLE TERMINATIONS | Col. 58 Card Type 3<br>Give method of restoring service to plant |
|---|---|---|---|---|---|---|---|---|---|---|---|---|---|---|---|
| % | % | % | % | % | % | % | % | % | % | % | % | % | % | % | |
| 7 | 1 | 3 | 6 | 0 | 5 | 20 | 0 | 58 | 25 | 20 | 13 | 14 | 28 | 19 | 1 Primary selection - manual |
| 2 | 8 | 0 | 1 | 0 | 0 | 0 | 0 | 0 | 5 | 0 | 4 | 5 | 8 | 0 | 2 Primary selection - automatic |
| 11 | 1 | 25 | 6 | 0 | 14 | 33 | 0 | 17 | 10 | 10 | 2 | 20 | 32 | 23 | 3 Secondary selection - manual |
| 2 | 1 | 3 | 8 | 0 | 0 | 0 | 0 | 0 | 0 | 0 | 1 | 0 | 8 | 4 | 4 Secondary selection - automatic |
| 0+ | 0 | 0 | 0 | 0 | 0 | 0 | 0 | 0 | 5 | 0 | 0 | 0 | 0 | 0 | 5 Network protector operation - automatic |
| 22 | 5 | 25 | 11 | 12 | 30 | 20 | 3 | 17 | 20 | 35 | 31 | 42 | 24 | 27 | 6 Repair of failed component |
| 22 | 2 | 39 | 38 | 10 | 29 | 14 | 77 | 0 | 10 | 35 | 6 | 2 | 0 | 12 | 7 Replacement of failed component with spare |
| 12 | 81 | 0 | 1 | 0 | 0 | 13 | 0 | 0 | 0 | 0 | 1 | 1 | 0 | 0 | 8 Utility restored service |
| 22 | 1 | 5 | 29 | 78 | 22 | 0 | 20 | 8 | 25 | 0 | 42 | 16 | 0 | 15 | 9 Other - explain in remarks |
| 100 | 100 | 100 | 100 | 100 | 100 | 100 | 100 | 100 | 100 | 100 | 100 | 100 | 100 | 100 | Total Percent |
| 1204 | 171 | 75 | 160 | 68 | 318 | 15 | 69 | 12 | 20 | 20 | 103 | 122 | 25 | 26 | TOTAL NUMBER REPORTED |

TABLE 60 - AVERAGE AGE OF ELECTRICAL EQUIPMENT

| TRANSFORMERS | CIRCUIT BREAKERS | MOTOR STARTERS | MOTORS | GENERATORS | DISCONNECT SWITCHES | SWITCHGEAR BUS-INSULATED | SWITCHGEAR BUS-BARE | BUS DUCT | OPEN WIRE | CABLE | CABLE JOINTS | CABLE TERMINATIONS | |
|---|---|---|---|---|---|---|---|---|---|---|---|---|---|
| NUMBER OF INSTALLED UNITS | | | | | | | | | | | | | Age |
| 6 | 989 | 101 | 104 | 0 | 0 | 0 | 0 | 0 | 30 | 15 | 0 | 12 | 1 Less than 1 year old |
| 694 | 3691 | 3162 | 1884 | 9 | 909 | 646 | 1998 | 1206 | 12 | 1019 | 1385 | 3314 | 2 1-10 years od |
| 835 | 1944 | 608 | 3643 | 77 | 552 | 691 | 555 | 13640 | 472 | 1831 | 2338 | 5712 | 3 More than 10 years old |

Copyright © 1998 IEEE. All rights reserved.

TABLE 61 - PLANT CLIMATE (for entire plant site)
TABLE 62 - PLANT ATMOSPHERE (for entire plant site)

| ALL INDUSTRY | CHEMICAL | METAL | PETROLEUM | RUBBER AND PLASTICS | TEXTILE | ALL OTHER | Table, Title, Card-Type 1 Column No. |
|---|---|---|---|---|---|---|---|
| NUMBER OF PLANTS | | | | | | | TABLE 61 - PLANT CLIMATE (Col. 9) |
| | | | | | | | Average of Daily Maximums for Hottest Month<br>Temperature — Relative Humidity (RH) (measured at noon to 2 PM ST) |
| 14 | 8 | 1 | 3 | 0 | 1 | 1 | 1 Hot (>90F) — High (>55 RH) |
| 3 | 3 | 0 | 0 | 0 | 0 | 0 | 2 Hot (>90F) — Moderate (50-55 RH) |
| 12 | 0 | 0 | 0 | 0 | 0 | 12 | 3 Hot (>90F) — Low (<50 RH) |
| 14 | 4 | 1 | 2 | 0 | 0 | 7 | 4 Moderate (80-90F) — High (>55 RH) |
| 16 | 5 | 1 | 0 | 1 | 1 | 8 | 5 Moderate (80-90F) — Moderate (50-55RH) |
| 6 | 1 | 0 | 1 | 2 | 1 | 1 | 6 Moderate (80-90F) — Low (<50 RH) |
| 1 | 0 | 0 | 0 | 0 | 0 | 1 | 7 Low (<80F) — High (>55 RH) |
| 2 | 0 | 0 | 2 | 0 | 0 | 0 | 8 Low (<80F) — Moderate (50-55 RH) |
| 0 | 0 | 0 | 0 | 0 | 0 | 0 | 9 Low (<80F) — Low (<50 RH) |
| | | | | | | | TABLE 62 - PLANT ATMOSPHERE (Col. 10) |
| 34 | 2 | 1 | 7 | 0 | 2 | 22 | 1 Clean to slightly polluted air |
| 5 | 4 | 0 | 1 | 0 | 0 | 0 | 2 With salt spray and corrosive chemicals |
| 0 | 0 | 0 | 0 | 0 | 0 | 0 | 3 With salt spray and dust or sand |
| 0 | 0 | 0 | 0 | 0 | 0 | 0 | 4 With salt spray only |
| 13 | 8 | 0 | 0 | 1 | 1 | 3 | 5 With corrosive chemicals and dust or sand |
| 4 | 4 | 0 | 0 | 0 | 0 | 0 | 6 With corrosive chemicals only |
| 2 | 0 | 0 | 0 | 0 | 0 | 2 | 7 With dust or sand only |
| 5 | 0 | 2 | 0 | 2 | 0 | 1 | 8 With conductive dust |
| 1 | 0 | 0 | 0 | 0 | 0 | 1 | 9 Other |





Copyright © 1998 IEEE. All rights reserved.

TABLE 63 - PLANT OPERATING SCHEDULE

| ALL INDUSTRY | CHEMICAL | METAL | PETROLEUM | RUBBER AND PLASTICS | TEXTILE | ALL OTHER | Title, Card-Type 1 Column No. |
|---|---|---|---|---|---|---|---|
| NUMBER OF PLANTS | | | | | | | HOURS PER DAY (Col. 11) |
| 0 | 0 | 0 | 0 | 0 | 0 | 0 | Less than 8 |
| 9 | 2 | 0 | 1 | 0 | 0 | 6 | 8 |
| 0 | 0 | 0 | 0 | 0 | 0 | 0 | 9 to 15 |
| 19 | 0 | 2 | 0 | 0 | 0 | 17 | 16 |
| 0 | 0 | 0 | 0 | 0 | 0 | 0 | 17 to 23 |
| 40 | 19 | 1 | 7 | 3 | 3 | 7 | 24 |
| | | | | | | | DAYS PER WEEK (Col. 13) |
| 0 | 0 | 0 | 0 | 0 | 0 | 0 | Less than 5 |
| 30 | 1 | 2 | 1 | 2 | 0 | 24 | 5 |
| 3 | 1 | 0 | 0 | 0 | 0 | 2 | 6 |
| 35 | 19 | 1 | 7 | 1 | 3 | 4 | 7 |

DISCUSSION—PERCENT PRODUCTION LOST

The most severe category of failure in an industrial plant is where above 30 percent of the production is lost. Data from Table 58 show that the following percent of equipment class failures resulted in losing above 30 percent of the production.

| | |
|---|---|
| Switchgear bus—bare | 50 percent |
| Electric utility power supplies | 27 percent |
| Switchgear bus—insulated | 20 percent |
| Cable terminations | 18 percent |
| Bus duct | 15 percent |
| Transformers | 15 percent |
| Generators | 15 percent |
| Open wire | 13 percent |
| Cable | 13 percent |
| Cable joints | 9 percent |
| Circuit breakers | 8 percent |
| Motors | 3 percent |
| Motor starters | 2 percent |

It can be seen that failures of switchgear bus and electric utility power supplies often result in losing above 30 percent of the production.

DISCUSSION—METHOD OF SERVICE RESTORATION

The data on method of electrical service restoration to plant is shown in Table 59. A percentage breakdown of the total shows the following results.

| | |
|---|---|
| Replacement of failed component with spare | 22 percent |
| Repair of failed components | 22 percent |
| Other | 22 percent |
| Utility service restored | 12 percent |
| Secondary selection—manual | 11 percent |
| Primary selection—manual | 7 percent |
| Primary selection—automatic | 2 percent |
| Secondary selection—automatic | 2 percent |
| Network protector operation—automatic | 0+ percent |

The most common methods of service restoration are replacement of failed component with a spare or repair of failed component. Only 22 percent of the time is primary selection or secondary selection used; this would indicate that most power distribution systems are radial.

DISCUSSION—AVERAGE AGE OF ELECTRICAL EQUIPMENT

Many respondents to the reliability survey of industrial plants submitted data covering a ten-year period. Thus it is not surprising to see that Table 60 shows a large population that is more than ten years old. The following percent of installed units are classified as more than ten years old.

Copyright © 1998 IEEE. All rights reserved.

| | |
|---|---|
| Bus duct | 92 percent |
| Open wire | 92 percent |
| Generators | 90 percent |
| Motors | 65 percent |
| Cable | 64 percent |
| Cable joints | 63 percent |
| Cable terminations | 63 percent |
| Transformers | 54 percent |
| Switchgear bus—insulated | 52 percent |

Motor starters, disconnect switches, switchgear bus—bare, and circuit breakers had over 50 percent of the installed units one to ten years old.

15 percent of the circuit breakers were less than one year old. All other equipment classes had less than 6 percent of the installed units less than a year old.

## DISCUSSION—PLANT CLIMATE AND ATMOSPHERE

Data on plant climate and plant atmosphere are given in Tables 61 and 62. 43 percent of the plants were in a hot climate, 53 percent in a moderate climate, and only 4 percent in a low climate (cold climate). 43 percent of the plants had high relative humidity, 31 percent had moderate relative humidity, and 26 percent had low relative humidity. 53 percent of the plants had a plant atmosphere classified as "clean to slightly polluted air." The other 47 percent had an atmosphere with some contamination.

## DISCUSSION—PLANT OPERATING SCHEDULE

The data on plant operating schedule are given in Table 63. 52 percent of the plants operated 7 days per week, 4 percent for 6 days, and 44 percent for 5 days. 59 percent of the plants operated 24 h per day, 28 percent for 16 h, and 13 percent for 8 h.

## REFERENCES

[1] W. H. Dickinson *et al.*, "Report on reliability survey of industrial plants, part I: Reliability of electrical equipment," *IEEE Trans. Ind. Appl.*, vol. IA-10, pp. 213–235, Mar./Apr. 1974.

[2] W. H. Dickinson *et al.*, "Report on reliability survey of industrial plants, part II: Cost of power outages, plant restart time, critical service loss duration time, and type of loads lost versus time of power outages," *IEEE Trans. Ind. Appl.*, vol. IA-10, pp. 236–241, Mar./Apr. 1974.

[3] W. H. Dickinson *et al.*, "Report on reliability survey of industrial plants, part III: Causes and types of failures of electrical equipment, the methods of repair, and the urgency of repair," *IEEE Trans. Ind. Appl.*, vol. IA-10, pp. 242–249, Mar./Apr. 1974.

[4] A. D. Patton *et al.*, "Report on reliability survey of industrial plants, part IV: Additional detailed tabulation of some data previously reported in the first three parts," this issue, pp. 456–462.

[5] A. D. Patton *et al.*, "Report on reliability survey of industrial plants, part VI: Maintenance quality of electrical equipment," this issue, pp. 467–476.



Copyright © 1998 IEEE. All rights reserved.

# Report on Reliability Survey of Industrial Plants, Part VI: Maintenance Quality of Electrical Equipment

IEEE COMMITTEE REPORT

*Abstract*—**An IEEE sponsored reliability survey of industrial plants was completed during 1972. This included maintenance quality, the frequency of schedule maintenance, and the failures caused by inadequate maintenance. The results are reported from the survey of 30 companies covering 68 plants in nine industries in the United States and Canada. This information is useful in the design of industrial power distribution systems.**

## INTRODUCTION

A KNOWLEDGE of maintenance quality of electrical equipment in industrial plants is useful information when planning the maintenance program of industrial power distribution systems. In addition it is useful to know how this correlates with the normal maintenance cycle and the failures blamed on inadequate maintenance. During 1972 the Reliability Subcommittee of the Industrial and Commercial Power Systems Committee completed a reliability survey of industrial plants. This paper presents Part VI of the results from the survey. The first three parts [1]–[3] were published previously. Table 38 from Part III reported that inadequate maintenance was blamed for between 8 to 30 percent of the failures of electrical equipment. This information has caused the Reliability Subcommittee to make a further study of the failure data; the results from this study are being reported in this paper. Included in Part VI are the results for 12 main classes of electrical equipment on

1) equipment population versus a) maintenance quality and b) normal maintenance cycle;
2) failures due to all causes versus a) failure, months since maintained, and b) maintenance quality;
3) failures due to inadequate maintenance versus a) failure, months since maintained, and b) maintenance quality.

The "maintenance quality" is an opinion that was reported by each participant in the survey. The four classifications used were "excellent," "fair," "poor," and "none." The "normal maintenance" cycle is the frequency of performing preventive maintenance.

Paper TOD-74-33, approved by the Industrial and Commercial Power Systems Committee of the IEEE Industry Applications Society for presentation at the 1974 Industrial and Commercial Power Systems Technical Conference, Denver, Colo., June 2–6. Manuscript released for publication April 15, 1974.

Members of the Reliability Subcommittee of the IEEE Industrial and Commercial Power Systems Committee are A. D. Patton, *Chairman*, C. E. Becker, W. H. Dickinson, P. E. Gannon, C. R. Heising, D. W. McWilliams, R. W. Parisian, and S. Wells.

## SURVEY FORM

The survey form is shown in Appendix A of Part I [1]. The information reported in this paper came from 1) card type 2, col. 34 (maintenance, normal cycle); 2) card type 2, col. 36 (maintenance quality); 3) card type 3, col. 34 (failure, months since maintained); 4) card type 3, col. 40 (suspected failure responsibility). The definition of *failure* is given in Part I.

## RESPONSE TO SURVEY

A total of 30 companies responded to the survey questionnaire, reporting data from nine industries in the United States and Canada. Every plant did not report all the information called for in card type 2, columns 34 and 36. Every failure report did not have filled out all of the information called for in card type 3, columns 34 and 40; a total of 1469 failures had this information filled in and are reported here in Part VI, and 240 of these failures were blamed on inadequate maintenance. Differences in the number of failures and unit-years reported here in Part VI and those previously reported in Part I and Part III can be explained from the preceding.

## STATISTICAL ANALYSIS

The subject of statistical analysis of equipment failures is discussed in Part I [1]. Confidence limits for the failure rate are shown in Fig. 1 of Part I. The Reliability Subcommittee concluded that eight failures is an adequate sample size for reporting failure rates in the summary in Table 2, Part I. In a few cases, failure rate data were reported in Tables 3 through 19, Part I, where there were less than eight failures.

In this paper several cases are reported in Tables 67 through 78, where the failure rate contains less than eight failures; these cases have been marked "small sample size."

## SURVEY RESULTS

Results are tabulated for 12 main equipment classes in Table 64 where the equipment population is given versus 1) maintenance quality and 2) normal maintenance cycle.

Table 65 summarizes the percent of each electrical equipment class population versus the maintenance quality. Table 66 summarizes the percent of each electrical equipment class population versus the normal maintenance cycle.

Results are tabulated for each of the 12 main equipment classes in Tables 67 through 78, where the number of failures is given for 1) failures due to all causes and 2)

Copyright © 1998 IEEE. All rights reserved.

# Correction to "Report on Reliability Survey of Industrial Plants, Part VI: Maintenance Quality of Electrical Equipment"

IEEE COMMITTEE REPORT

TABLE 64 - POPULATION OF ELECTRICAL EQUIPMENT
VERSUS MAINTENANCE QUALITY & NORMAL MAINTENANCE CYCLE

| MAINTENANCE QUALITY Card-Type 2 Col. 36 | MAINTENANCE, NORMAL CYCLE Card-Type 2 Col. 34 | | | | |
|---|---|---|---|---|---|
| | Less Than 12 Months | 12 - 24 Months | More Than 24 Months | No Preventive Maintenance | Total |
| | Population: Unit-Years | | | | |
| TRANSFORMERS | | | | | |
| Excellent | 19 | 8,904 | 2,314 | 0 | 11,237 |
| Fair | 292 | 3,081 | 5,961 | 0 | 9,334 |
| Poor | 0 | 130 | 210 | 0 | 340 |
| None | 0 | 0 | 0 | 39 | 39 |
| Total | 311 | 12,115 | 8,485 | 39 | 20,950 |
| CIRCUIT BREAKERS | | | | | |
| Excellent | 297 | 11,640 | 5,014 | 0 | 16,951 |
| Fair | 1 | 12,620 | 11,860 | 0 | 24,481 |
| Poor | 0 | 0 | 1,810 | 0 | 1,810 |
| None | 0 | 0 | 0 | 7,608 | 7,608 |
| Total | 298 | 24,260 | 18,684 | 7,608 | 50,850 |
| MOTOR STARTERS | | | | | |
| Excellent | 126 | 2,724 | 0 | 0 | 2,850 |
| Fair | 68 | 4,348 | 3,435 | 0 | 7,851 |
| Poor | 0 | 680 | 427 | 70 | 1,177 |
| None | 0 | 0 | 0 | 0 | 0 |
| Total | 194 | 7,752 | 3,862 | 70 | 11,878 |
| MOTORS | | | | | |
| Excellent | 14,650 | 1,372 | 1,259 | 17 | 17,298 |
| Fair | 121 | 21,930 | 2,958 | 0 | 25,009 |
| Poor | 0 | 0 | 74 | 70 | 144 |
| None | 0 | 0 | 0 | 13 | 13 |
| Total | 14,771 | 23,302 | 4,291 | 100 | 42,464 |
| GENERATORS | | | | | |
| Excellent | 104.4 | 380.7 | 0 | 0 | 485.1 |
| Fair | 74.4 | 279.8 | 0 | 0 | 354.2 |
| Poor | 0 | 0 | 0 | 0 | 0 |
| None | 0 | 0 | 0 | 0 | 0 |
| Total | 178.8 | 660.5 | 0 | 0 | 839.3 |
| DISCONNECT SWITCHES | | | | | |
| Excellent | 0 | 6,287 | 1,435 | 0 | 7,722 |
| Fair | 58 | 426 | 2,642 | 0 | 3,126 |
| Poor | 0 | 402 | 0 | 0 | 402 |
| None | 0 | 0 | 0 | 7,365 | 7,365 |
| Total | 58 | 7,115 | 4,077 | 7,365 | 18,615 |

(see pp. 681 for the second part of Table 64)

TABLE 64 - POPULATION OF ELECTRICAL EQUIPMENT
VERSUS MAINTENANCE QUALITY & NORMAL MAINTENANCE CYCLE

| MAINTENANCE QUALITY Card-Type 2 Col. 36 | MAINTENANCE, NORMAL CYCLE Card-Type 2 Col. 34 | | | | |
|---|---|---|---|---|---|
| | Less Than 12 Months | 12-24 Months | More Than 24 Months | No Preventive Maintenance | Total |
| | Population: Unit-Years | | | | |
| SWITCHGEAR BUS - INSULATED** | | | | | |
| Excellent | 0 | 364 | 12,160 | 0 | 12,524 |
| Fair | 0 | 1,706 | 0 | 0 | 1,706 |
| Poor | 0 | 0 | 0 | 0 | 0 |
| None | 0 | 0 | 0 | 1,541 | 1,541 |
| Total | 0 | 2,070 | 12,160 | 1,541 | 15,771 |
| SWITCHGEAR BUS - BARE** | | | | | |
| Excellent | 0 | 1,854 | 27,580 | 0 | 29,434 |
| Fair | 0 | 19,440 | 2,826 | 0 | 22,266 |
| Poor | 0 | 769 | 0 | 0 | 769 |
| None | 0 | 0 | 0 | 369 | 369 |
| Total | 0 | 22,063 | 30,406 | 369 | 52,838 |
| OPEN WIRE (Unit = 1,000 Circuit Feet) | | | | | |
| Excellent | 0 | 2,217 | 1,014 | 0 | 3,231 |
| Fair | 0 | 103 | 2,630 | 0 | 2,733 |
| Poor | 0 | 0 | 0 | 0 | 0 |
| None | 0 | 0 | 0 | 680 | 680 |
| Total | 0 | 2,320 | 3,644 | 680 | 6,644 |
| CABLE (Unit = 1000 Circuit Feet) | | | | | |
| Excellent | 600 | 329 | 400 | 0 | 1,329 |
| Fair | 7 | 7,900 | 8,519 | 135 | 16,561 |
| Poor | 0 | 23 | 563 | 35 | 621 |
| None | 0 | 0 | 203 | 9,920 | 10,123 |
| Total | 607 | 8,252 | 9,685 | 10,090 | 28,634 |
| CABLE JOINTS | | | | | |
| Excellent | 0 | 9,374 | 311 | 0 | 9,685 |
| Fair | 12 | 2,800 | 23,530 | 0 | 26,342 |
| Poor | 0 | 0 | 1,483 | 0 | 1,483 |
| None | 0 | 0 | 0 | 12,110 | 12,110 |
| Total | 12 | 12,174 | 25,324 | 12,110 | 49,620 |
| CABLE TERMINATIONS | | | | | |
| Excellent | 2,500 | 14,290 | 15,650 | 0 | 32,440 |
| Fair | 0 | 1,452 | 35,200 | 1,170 | 37,822 |
| Poor | 0 | 0 | 845 | 0 | 845 |
| None | 0 | 0 | 0 | 54,280 | 54,280 |
| Total | 2,500 | 15,742 | 51,695 | 55,450 | 125,387 |

**Unit - Number of Connected Circuit Breakers or Instrument Transformer Compartments



Copyright © 1998 IEEE. All rights reserved.

failures due to inadequate maintenance, versus 1) failure, months since maintained, and 2) maintenance quality. Failure rate calculations are also given in Tables 67 through 78; these calculations used the population data from Table 64.

Table 79 summarizes the number of failures for all equipment classes combined versus the maintenance quality. Table 80 summarizes the number of failures for all equipment classes combined versus the months since maintained.

## GENERAL CONCLUSIONS—MAINTENANCE QUALITY

The maintenance quality is an opinion that was reported by each participant in the survey. The major portion of the electrical equipment population in the survey had a maintenance quality that was classified as excellent or fair. Less than 5 percent of the population in each equipment class (except for motor starters) were classified as poor. Four equipment categories had between 24 percent to 43 percent of the population classified as "none" under maintenance quality; this included cable termination (43 percent), disconnect switches (40 percent), cable (35 percent), and cable joints (24 percent).

Maintenance quality had a significant effect on the percent of all failures that were blamed on inadequate maintenance. In the "poor" category 33 percent of all failures were blamed on inadequate maintenance. This compares with 18 percent for fair maintenance and 12 percent for excellent maintenance. The "none" category for maintenance quality also had 12 percent of all failures blamed on inadequate maintenance; but 82 percent of these failures were for equipment classes that do not require much maintenance (cable, cable terminations, cable joints,

TABLE 65 - PERCENT OF ELECTRICAL EQUIPMENT POPULATION VERSUS MAINTENANCE QUALITY
(All Data Taken from Table 64)

| MAINTENANCE QUALITY Card-Type 2 Col. 36 | TRANSFORMERS | CIRCUIT BREAKERS | MOTOR STARTERS | MOTORS | GENERATORS | DISCONNECT SWITCHES | SWITCHGEAR BUS-INSULATED | SWITCHGEAR BUS-BARE | OPEN WIRE | CABLE | CABLE JOINTS | CABLE TERMINATIONS |
|---|---|---|---|---|---|---|---|---|---|---|---|---|
| | % | % | % | % | % | % | % | % | % | % | % | % |
| Excellent | 54 | 33 | 24 | 41 | 58 | 41 | 79 | 56 | 49 | 5 | 20 | 26 |
| Fair | 44 | 48 | 66 | 59 | 42 | 17 | 11 | 42 | 41 | 58 | 53 | 30 |
| Poor | 2 | 4 | 10 | 0+ | 0 | 2 | 0 | 1 | 0 | 2 | 3 | 1 |
| None | 0+ | 15 | 0 | 0+ | 0 | 40 | 10 | 1 | 10 | 35 | 24 | 43 |
| Total | 100 | 100 | 100 | 100 | 100 | 100 | 100 | 100 | 100 | 100 | 100 | 100 |

TABLE 66 - PERCENT OF ELECTRICAL EQUIPMENT POPULATION VERSUS NORMAL MAINTENANCE CYCLE
(All Data Taken from Table 64)

| MAINTENANCE, NORMAL CYCLE Card-Type 2 Col. 34 | TRANSFORMERS | CIRCUIT BREAKERS | MOTOR STARTERS | MOTORS | GENERATORS | DISCONNECT SWITCHES | SWITCHGEAR BUS-INSULATED | SWITCHGEAR BUS-BARE | OPEN WIRE | CABLE | CABLE JOINTS | CABLE TERMINATIONS |
|---|---|---|---|---|---|---|---|---|---|---|---|---|
| | % | % | % | % | % | % | % | % | % | % | % | % |
| Less than 12 Months | 1 | 1 | 2 | 35 | 21 | 0+ | 0 | 0 | 0 | 2 | 0+ | 2 |
| 12-24 Months | 58 | 47 | 65 | 55 | 79 | 38 | 13 | 42 | 35 | 29 | 25 | 13 |
| More than 24 Months | 41 | 37 | 32 | 10 | 0 | 22 | 77 | 57 | 55 | 34 | 51 | 41 |
| No Preventive Maintenance | 0+ | 15 | 1 | 0+ | 0 | 40 | 10 | 1 | 10 | 35 | 24 | 44 |
| Total | 100 | 100 | 100 | 100 | 100 | 100 | 100 | 100 | 100 | 100 | 100 | 100 |

Copyright © 1998 IEEE. All rights reserved.

TABLE 67 - NUMBER OF TRANSFORMER
FAILURES VERSUS MONTHS SINCE MAINTAINED AND MAINTENANCE QUALITY

| MAINTENANCE QUALITY Card-Type 2 Col. 36 | FAILURE, MONTHS SINCE MAINTAINED Card-Type 3, Col. 34: Less Than 12 Months Ago | 12 - 24 Months Ago | More Than 24 Months Ago | No Preventive Maintenance | Total | Failures per Unit-Year ALL CAUSES |
|---|---|---|---|---|---|---|
| | Number of Failures Due to ALL CAUSES | | | | | |
| Excellent | 22 | 11 | 5 | 0 | 38 | |
| Fair | 10 | 26 | 16 | 1 | 53 | |
| Poor | 2 | 1 | 1 | 1 | 5 | |
| None | 0 | 0 | 0 | 3 | 3 | |
| Total | 34 | 38 | 22 | 5 | 99 | .00473 |
| | Number of Failures Due to INADEQUATE MAINTENANCE (Card-Type 3 Col. 40) | | | | | INADEQUATE MAINTENANCE |
| Excellent | 0 | 1 | 2 | 0 | 3 | .00027* |
| Fair | 1 | 0 | 6 | 0 | 7 | .00075* |
| Poor | 0 | 0 | 0 | 1 | 1 | .00294* |
| None | 0 | 0 | 0 | 0 | 0 | .00000* |
| Total | 1 | 1 | 8 | 1 | 11 | .00053 |

* Small Sample Size

TABLE 68 - NUMBER OF CIRCUIT BREAKER
FAILURES VERSUS MONTHS SINCE MAINTAINED AND MAINTENANCE QUALITY

| MAINTENANCE QUALITY Card-Type 2 Col. 36 | FAILURE, MONTHS SINCE MAINTAINED Card-Type 3, Col. 34: Less Than 12 Months Ago | 12 -24 Months Ago | More Than 24 Months Ago | No Preventive Maintenance | Total | Failures per Unit-Year ALL CAUSES |
|---|---|---|---|---|---|---|
| | Number of Failures Due to ALL CAUSES | | | | | |
| Excellent | 13 | 60 | 3 | 1 | 77 | |
| Fair | 18 | 42 | 4 | 1 | 65 | |
| Poor | 0 | 2 | 2 | 0 | 4 | |
| None | 1 | 0 | 0 | 26 | 27 | |
| Total | 32 | 104 | 9 | 28 | 173 | .00340 |
| | Number of Failures Due to INADEQUATE MAINTENANCE (Card-Type 3 Col. 40) | | | | | INADEQUATE MAINTENANCE |
| Excellent | 2 | 1 | 3 | 1 | 7 | .00041* |
| Fair | 2 | 18 | 2 | 0 | 22 | .00090 |
| Poor | 0 | 1 | 2 | 0 | 3 | .00166* |
| None | 0 | 0 | 0 | 4 | 4 | .00053* |
| Total | 4 | 20 | 7 | 5 | 36 | .00071 |

* Small Sample Size

TABLE 69 - NUMBER OF MOTOR STARTER
FAILURES VERSUS MONTHS SINCE MAINTAINED AND MAINTENANCE QUALITY

| MAINTENANCE QUALITY Card-Type 2 Col. 36 | FAILURE, MONTHS SINCE MAINTAINED Card-Type 3 Col. 34: Less Than 12 Months Ago | 12 - 24 Months Ago | More Than 24 Months Ago | No Preventive Maintenance | Total | Failures per Unit-Year ALL CAUSES |
|---|---|---|---|---|---|---|
| | Number of Failures Due to ALL CAUSES | | | | | |
| Excellent | 13 | 1 | 4 | 0 | 18 | |
| Fair | 45 | 13 | 8 | 0 | 66 | |
| Poor | 1 | 1 | 2 | 0 | 4 | |
| None | 0 | 0 | 0 | 0 | 0 | |
| Total | 59 | 15 | 14 | 0 | 88 | .00741 |
| | Number of Failures Due to INADEQUATE MAINTENANCE (Card-Type 3 Col. 40) | | | | | INADEQUATE MAINTENANCE |
| Excellent | 1 | 0 | 0 | 0 | 1 | .00035* |
| Fair | 0 | 1 | 3 | 0 | 4 | .00051* |
| Poor | 1 | 0 | 1 | 0 | 2 | .00170* |
| None | 0 | 0 | 0 | 0 | 0 | ---- |
| Total | 2 | 1 | 4 | 0 | 7 | .00059* |

* Small Sample Size


Copyright © 1998 IEEE. All rights reserved.

TABLE 70 - NUMBER OF MOTOR
FAILURES VERSUS MONTHS SINCE MAINTAINED AND MAINTENANCE QUALITY

| MAINTENANCE QUALITY Card-Type 2 Col. 36 | FAILURE, MONTHS SINCE MAINTAINED Card-Type 3 Col. 34: Less Than 12 Months Ago | 12 - 24 Months Ago | More Than 24 Months Ago | No Preventive Maintenance | Total | Failures per Unit-Year ALL CAUSES |
|---|---|---|---|---|---|---|
| | Number of Failures Due to ALL CAUSES | | | | | |
| Excellent | 56 | 14 | 7 | 0 | 77 | |
| Fair | 58 | 280 | 90 | 11 | 439 | |
| Poor | 0 | 0 | 2 | 0 | 2 | |
| None | 0 | 0 | 0 | 0 | 0 | |
| Total | 114 | 294 | 99 | 11 | 518 | .01221 |
| | Number of Failures Due to INADEQUATE MAINTENANCE (Card-Type 3 Col. 40) | | | | | INADEQUATE MAINTENANCE |
| Excellent | 8 | 1 | 1 | 0 | 10 | .00058 |
| Fair | 2 | 25 | 41 | 2 | 70 | .00280 |
| Poor | 0 | 0 | 2 | 0 | 2 | .01390* |
| None | 0 | 0 | 0 | 0 | 0 | .00000* |
| Total | 10 | 26 | 44 | 2 | 82 | .00194 |

* Small Sample Size

TABLE 71 - NUMBER OF GENERATOR
FAILURES VERSUS MONTHS SINCE MAINTAINED AND MAINTENANCE QUALITY

| MAINTENANCE QUALITY Card-Type 2 Col. 36 | FAILURE, MONTHS SINCE MAINTAINED Card-Type 3 Col. 34: Less Than 12 Months Ago | 12 - 24 Months Ago | More Than 24 Months Ago | No Preventive Maintenance | Total | Failures per Unit-Year ALL CAUSES |
|---|---|---|---|---|---|---|
| | Number of Failures Due to ALL CAUSES | | | | | |
| Excellent | 14 | 9 | 0 | 0 | 23 | |
| Fair | 1 | 4 | 0 | 0 | 5 | |
| Poor | 0 | 0 | 0 | 0 | 0 | |
| None | 0 | 0 | 0 | 0 | 0 | |
| Total | 15 | 13 | 0 | 0 | 28 | .03360 |
| | Number of Failures Due to INADEQUATE MAINTENANCE (Card-Type 3 Col. 40) | | | | | INADEQUATE MAINTENANCE |
| Excellent | 3 | 0 | 0 | 0 | 3 | .00618* |
| Fair | 0 | 2 | 0 | 0 | 2 | .00565* |
| Poor | 0 | 0 | 0 | 0 | 0 | |
| None | 0 | 0 | 0 | 0 | 0 | |
| Total | 3 | 2 | 0 | 0 | 5 | .00596* |

* Small Sample Size

TABLE 72 - NUMBER OF DISCONNECT SWITCH
FAILURES VERSUS MONTHS SINCE MAINTAINED AND MAINTENANCE QUALITY

| MAINTENANCE QUALITY Card-Type 2 Col. 36 | FAILURE, MONTHS SINCE MAINTAINED Card-Type 3 Col. 34: Less Than 12 Months Ago | 12 - 24 Months Ago | More Than 24 Months Ago | No Preventive Maintenance | Total | Failures per Unit-Year ALL CAUSES |
|---|---|---|---|---|---|---|
| | Number of Failures Due to ALL CAUSES | | | | | |
| Excellent | 4 | 0 | 1 | 0 | 5 | |
| Fair | 4 | 5 | 4 | 0 | 13 | |
| Poor | 0 | 0 | 16 | 0 | 16 | |
| None | 0 | 0 | 0 | 67 | 67 | |
| Total | 8 | 5 | 21 | 67 | 101 | .00542 |
| | Number of Failures Due to INADEQUATE MAINTENANCE (Card-Type 3 Col. 40) | | | | | INADEQUATE MAINTENANCE |
| Excellent | 0 | 0 | 1 | 0 | 1 | .00013* |
| Fair | 0 | 4 | 1 | 0 | 5 | .00160* |
| Poor | 0 | 0 | 0 | 0 | 0 | .00000* |
| None | 0 | 0 | 0 | 7 | 7 | .00095* |
| Total | 0 | 4 | 2 | 7 | 13 | .00070 |

* Small Sample Size

Copyright © 1998 IEEE. All rights reserved.

TABLE 73 - NUMBER OF SWITCHGEAR BUS-INSULATED
FAILURES VERSUS MONTHS SINCE MAINTAINED AND MAINTENANCE QUALITY

| MAINTENANCE QUALITY Card-Type 2 Col. 36 | FAILURE, MONTHS SINCE MAINTAINED Card-Type 3 Col. 34: Less Than 12 Months Ago | 12 - 24 Months Ago | More Than 24 Months Ago | No Preventive Maintenance | Total | Failures per **Unit-Year ALL CAUSES |
|---|---|---|---|---|---|---|
| | Number of Failures Due to ALL CAUSES | | | | | |
| Excellent | 2 | 3 | 10 | 0 | 15 | |
| Fair | 0 | 4 | 1 | 0 | 5 | |
| Poor | 0 | 0 | 0 | 0 | 0 | |
| None | 0 | 0 | 0 | 0 | 0 | |
| Total | 2 | 7 | 11 | 0 | 20 | .00127 |
| | Number of Failures Due to INADEQUATE MAINTENANCE (Card-Type 3 Col. 40) | | | | | INADEQUATE MAINTENANCE |
| Excellent | 0 | 0 | 6 | 0 | 6 | .00048* |
| Fair | 0 | 0 | 1 | 0 | 1 | .00059* |
| Poor | 0 | 0 | 0 | 0 | 0 | |
| None | 0 | 0 | 0 | 0 | 0 | .00000* |
| Total | 0 | 0 | 7 | 0 | 7 | .00044* |

* Small Sample Size
**Unit = Number of Connected Circuit Breakers or Instrument Transformer Compartments

TABLE 74 - NUMBER OF SWITCHGEAR BUS-BARE
FAILURES VERSUS MONTHS SINCE MAINTAINED AND MAINTENANCE QUALITY

| MAINTENANCE QUALITY Card-Type 2 Col. 36 | FAILURE, MONTHS SINCE MAINTAINED Card-Type 3 Col. 34: Less Than 12 Months Ago | 12 - 24 Months Ago | More Than 24 Months Ago | No Preventive Maintenance | Total | Failures per **Unit-Year ALL CAUSES |
|---|---|---|---|---|---|---|
| | Number of Failures Due to ALL CAUSES | | | | | |
| Excellent | 2 | 1 | 1 | 0 | 4 | |
| Fair | 4 | 6 | 2 | 2 | 14 | |
| Poor | 2 | 0 | 0 | 0 | 2 | |
| None | 0 | 0 | 0 | 3 | 3 | |
| Total | 8 | 7 | 3 | 5 | 23 | .00044 |
| | Number of Failures Due to INADEQUATE MAINTENANCE (Card-Type 3 Col. 40) | | | | | INADEQUATE MAINTENANCE |
| Excellent | 0 | 0 | 0 | 0 | 0 | .00000* |
| Fair | 1 | 1 | 2 | 0 | 4 | .00018* |
| Poor | 0 | 0 | 0 | 0 | 0 | .00000* |
| None | 0 | 0 | 0 | 1 | 1 | .00271* |
| Total | 1 | 1 | 2 | 1 | 5 | .00009* |

* Small Sample Size
**Unit = Number of Connected Circuit Breakers or Instrument Transformer Compartments

TABLE 75 - NUMBER OF OPEN WIRE
FAILURES VERSUS MONTHS SINCE MAINTAINED AND MAINTENANCE QUALITY

| MAINTENANCE QUALITY Card-Type 2 Col. 36 | FAILURE, MONTHS SINCE MAINTAINED Card-Type 3 Col. 34: Less Than 12 Months Ago | 12 - 24 Months Ago | More Than 24 Months Ago | No Preventive Maintenance | Total | Failures per **Unit-Year ALL CAUSES |
|---|---|---|---|---|---|---|
| | Number of Failures Due to ALL CAUSES | | | | | |
| Excellent | 0 | 1 | 3 | 0 | 4 | |
| Fair | 1 | 8 | 85 | 0 | 94 | |
| Poor | 0 | 0 | 0 | 0 | 0 | |
| None | 0 | 0 | 0 | 10 | 10 | |
| Total | 1 | 9 | 88 | 10 | 108 | .01628 |
| | Number of Failures Due to INADEQUATE MAINTENANCE (Card-Type 3 Col. 40) | | | | | INADEQUATE MAINTENANCE |
| Excellent | 0 | 1 | 1 | 0 | 2 | .00062* |
| Fair | 0 | 1 | 30 | 0 | 31 | .01132 |
| Poor | 0 | 0 | 0 | 0 | 0 | —— * |
| None | 0 | 0 | 0 | 0 | 0 | .00000* |
| Total | 0 | 2 | 31 | 0 | 33 | .00497 |

* Small Sample Size
** Unit = 1,000 Circuit Feet


Copyright © 1998 IEEE. All rights reserved.

TABLE 76 - NUMBER OF CABLE
FAILURES VERSUS MONTHS SINCE MAINTAINED AND MAINTENANCE QUALITY

| MAINTENANCE QUALITY Card-Type 2 Col. 36 | FAILURE, MONTHS SINCE MAINTAINED Card-Type 3 Col. 34 | | | | | Failures per **Unit-Year |
|---|---|---|---|---|---|---|
| | Less Than 12 Months Ago | 12 - 24 Months Ago | More Than 24 Months Ago | No Preventive Maintenance | Total | ALL CAUSES |
| | Number of Failures Due to ALL CAUSES | | | | | |
| Excellent | 5 | 6 | 2 | 21 | 34 | |
| Fair | 18 | 19 | 16 | 6 | 59 | |
| Poor | 0 | 3 | 2 | 21 | 26 | |
| None | 0 | 0 | 2 | 95 | 97 | |
| Total | 23 | 28 | 22 | 143 | 216 | .00755 |
| | Number of Failures Due to INADEQUATE MAINTENANCE (Card-Type 3 Col. 40) | | | | | INADEQUATE MAINTENANCE |
| Excellent | 0 | 0 | 0 | 0 | 0 | .00000* |
| Fair | 0 | 2 | 0 | 0 | 2 | .00012* |
| Poor | 0 | 0 | 2 | 6 | 8 | .01290 |
| None | 0 | 0 | 0 | 12 | 12 | .00119 |
| Total | 0 | 2 | 2 | 18 | 22 | .00077 |

* Small Sample Size
** Unit = 1,000 Circuit Feet

TABLE 77 - NUMBER OF CABLE JOINT
FAILURES VERSUS MONTHS SINCE MAINTAINED AND MAINTENANCE QUALITY

| MAINTENANCE QUALITY Card-Type 2 Col. 36 | FAILURE, MONTHS SINCE MAINTAINED Card-Type 3 Col. 34 | | | | | Failures per Unit-Year |
|---|---|---|---|---|---|---|
| | Less Than 12 Months Ago | 12 - 24 Months Ago | More Than 24 Months Ago | No Preventive Maintenance | Total | ALL CAUSES |
| | Number of Failures Due to ALL CAUSES | | | | | |
| Excellent | 2 | 4 | 0 | 0 | 6 | |
| Fair | 6 | 5 | 1 | 5 | 17 | |
| Poor | 0 | 0 | 0 | 7 | 7 | |
| None | 0 | 0 | 0 | 15 | 15 | |
| Total | 8 | 9 | 1 | 27 | 45 | .00091 |
| | Number of Failures Due to INADEQUATE MAINTENANCE (Card-Type 3 Col. 40) | | | | | INADEQUATE MAINTENANCE |
| Excellent | 0 | 0 | 0 | 0 | 0 | .00000* |
| Fair | 1 | 0 | 0 | 0 | 1 | .00004* |
| Poor | 0 | 0 | 0 | 6 | 6 | .00405* |
| None | 0 | 0 | 0 | 1 | 1 | .00008* |
| Total | 1 | 0 | 0 | 7 | 8 | .00016 |

* Small Sample Size

TABLE 78 - NUMBER OF CABLE TERMINATION
FAILURES VERSUS MONTHS SINCE MAINTAINED AND MAINTENANCE QUALITY

| MAINTENANCE QUALITY Card-Type 2 Col. 36 | FAILURE, MONTHS SINCE MAINTAINED Card-Type 3 Col. 34 | | | | | Failures per Unit-Year |
|---|---|---|---|---|---|---|
| | Less Than 12 Months Ago | 12 - 24 Months Ago | More Than 24 Months Ago | No Preventive Maintenance | Total | ALL CAUSES |
| | Number of Failures Due to ALL CAUSES | | | | | |
| Excellent | 3 | 3 | 4 | 0 | 10 | |
| Fair | 3 | 3 | 14 | 3 | 23 | |
| Poor | 0 | 0 | 0 | 1 | 1 | |
| None | 0 | 0 | 0 | 16 | 16 | |
| Total | 6 | 6 | 18 | 20 | 50 | .00040 |
| | Number of Failures Due to INADEQUATE MAINTENANCE (Card-Type 3 Col. 40) | | | | | INADEQUATE MAINTENANCE |
| Excellent | 1 | 1 | 1 | 0 | 3 | .00009* |
| Fair | 0 | 0 | 5 | 0 | 5 | .00013* |
| Poor | 0 | 0 | 0 | 0 | 0 | .00000* |
| None | 0 | 0 | 0 | 3 | 3 | .00006* |
| Total | 1 | 1 | 6 | 3 | 11 | .00008 |

* Small Sample Size

Copyright © 1998 IEEE. All rights reserved.

TABLE 79 - NUMBER OF FAILURES VERSUS MAINTENANCE QUALITY FOR ALL EQUIPMENT CLASSES COMBINED

| MAINTENANCE QUALITY Card-Type 2 Col. 36 | Number of Failures in Tables 67 thru 78 ALL CAUSES | INADEQUATE MAINTENANCE | PERCENT of Failures Due to Inadequate Maintenance |
|---|---|---|---|
| Excellent | 311 | 36 | 11.6% |
| Fair | 853 | 154 | 18.1% |
| Poor | 67 | 22 | 32.8% |
| None | 238 | 28 | 11.8% |
| Total | 1,469 | 240 | 16.4% |

TABLE 80 - NUMBER OF FAILURES VERSUS MONTHS SINCE MAINTAINED FOR ALL EQUIPMENT CLASSES COMBINED

| FAILURE, MONTHS SINCE MAINTAINED Card-Type 3, Col. 34 | Number of Failures in Tables 67 thru 78 ALL CAUSES | INADEQUATE MAINTENANCE | PERCENT of Failures Due to Inadequate Maintenance |
|---|---|---|---|
| Less than 12 Months Ago | 310 | 23 | 7.4% |
| 12-24 Months Ago | 535 | 60 | 11.2% |
| More Than 24 Months Ago | 308 | 113 | 36.7% |
| No Preventive Maintenance | 316 | 44 | 13.9% |
| Total | 1,469 | 240 | 16.4% |

and disconnect switches). Thus this 12 percent for "none" is explainable and is not inconsistent with what could be expected.

As maintenance quality decreases from "excellent" to "fair" to "poor," the following equipment classes showed an increasing failure rate from failures blamed on inadequate maintenance: transformers, circuit breakers, motor starters, motors, disconnect switches, switchgear bus—bare, open wire, cable, and cable joints. In some of these cases the sample size is smaller than desirable (less than eight failures) in order to conclusively prove this general statement.

## OTHER CONCLUSIONS

*Circuit Breakers*

Approximately 15 percent of the circuit breaker population had a maintenance quality classified as "none." This compares with less than 1 percent of the population for transformers, motors, and generators.

It is of interest to note that data from Table 60, Part V also show that 15 percent of the circuit breaker population was less than one year old; this compares with less than 3 percent of the population for transformers, motors, and generators. This may possibly account for some of the listings of "none" under maintenance quality reported for failures of circuit breakers.

*Motors*

Motors with a maintenance quality of "fair" had a failure rate due to inadequate maintenance that was five times higher than motors with excellent maintenance quality.

*Open Wire*

Open wire with a maintenance quality of "fair" had a failure rate due to inadequate maintenance that was more than ten times higher than open wire with excellent maintenance quality.

## DISCUSSION—MAINTENANCE QUALITY

From Table 79 it is possible to calculate for all equipment classes combined the ratio of the number of failures from inadequate maintenance to the number of failures from all other causes. This ratio versus maintenance quality is as follows: poor—0.49, fair—0.22, excellent—


Copyright © 1998 IEEE. All rights reserved.

0.13. This is a measure of how much improvement can be obtained by upgrading the maintenance quality from poor to fair to excellent. An excellent maintenance program has only 13 percent more failures added by inadequate maintenance, while a poor maintenance program has 49 percent more failures added by inadequate maintenance.

It is apparent from the data that excellent maintenance quality is very important on open wire and on motors.

It would also appear from the data in Table 65 that essentially everyone in the survey did excellent or fair maintenance on transformers, generators, and switchgear bus—bare. However, on circuit breakers 15 percent of the population had "none" and 4 percent had "poor" on maintenance quality. On motor starters 10 percent had "poor" on maintenance quality. Thus, it would appear that everyone did not maintain circuit breakers and motor starters as well as transformers, generators, and switchgear bus—bare.

One of the drawbacks to the results reported under maintenance quality was that there was no objective definition of "excellent," "fair," or "poor." There are no standards for maintenance quality, and thus this data must be considered to be individual judgment. However, data reported under "failure, months since maintained" does not have this same drawback; this data can be considered factual.

## DISCUSSION—FAILURE, MONTHS SINCE MAINTAINED

The data in Table 80 show for all equipment classes combined that there is a close correlation between the percent of failures due to inadequate maintenance and the failure, months since maintained.

| Failure, Months Since Maintained | Percent of Failures Due to Inadequate Maintenance |
|---|---|
| Less than 12 months ago | 7.4 |
| 12–24 months ago | 11.2 |
| More than 24 months ago | 36.7 |

Data from Tables 67 through 78 can also be used to calculate similar correlations for several equipment categories; however, in some cases the sample size is smaller than desirable for adequate statistical confidence.

## COMMENTS—NORMAL MAINTENANCE CYCLE

A detailed analysis has not been made of the "maintenance, normal cycle" data in Tables 64 and 66. It is possible that some interesting conclusions could also be drawn from an analysis of this data.

## REFERENCES

[1] W. H. Dickinson *et al.*, "Report on reliability survey of industrial plants, part I: Reliability of electrical equipment," *IEEE Trans. Ind. Appl.*, vol. 1A-10, pp. 213–235, Mar./Apr. 1974.

[2] W. H. Dickinson *et al.*, "Report on reliability survey of industrial plants, part II: Cost of power outages, plant restart time, critical service loss duration time, and type of loads lost versus time of power outages," *IEEE Trans. Ind. Appl.*, vol. 1A-10, pp. 236–241, Mar./Apr. 1974.

[3] W. H. Dickinson *et al.*, "Report on reliability survey of industrial plants, part III: Causes and types of failures of electrical equipment, the methods of repair, and the urgency of repair," *IEEE Trans. Ind. Appl.*, vol. 1A-10, pp. 242–249, Mar./Apr. 1974.

Copyright © 1998 IEEE. All rights reserved.

This page is intentionally blank

# Appendix C

# Cost of Electrical Interruptions in Commercial Buildings

By
Power Systems Reliability Subcommittee
Industrial and Commercial Power Systems Committee
IEEE Industry Applications Society

**P. E. Gannon,** Coordinating Author
**A. D. Patton,** *Chair*

C. E. Becker
M. F. Chamow
W. H. Dickinson
M. D. Harris
C. R. Heising
R. T. Kulvicki
D. W. McWilliams
R. W. Parisian
S. J. Wells

**Industrial and Commercial Power Systems Technical Conference**
**Institute of Electrical and Electronics Engineers, Inc.**
**Toronto, Canada**
**May 5-8, 1975**

Reprinted from IEEE Conference Record
75CH0947-1-1A, pp. 123-129

Copyright © 1998 IEEE. All rights reserved.

This page is intentionally blank

# COST OF ELECTRICAL INTERRUPTIONS IN COMMERCIAL BUILDINGS

by

Power Systems Reliability Subcommittee Report
Philip E. Gannon, Coordinating Author[1/]

## Abstract

An IEEE sponsored reliability survey to determine the cost of electrical interruptions in commercial buildings was completed in 1974. The survey form was a simplified version of forms used in 1972 reliability study of industrial plants. The survey included building types and locations, and length and cost of electrical service interruptions. The survey results reflect data from 48 companies covering 55 buildings in the United States. This information is useful in the design of electrical systems for commercial buildings.

## Introduction

Knowledge of the cost of power outages, both for normal and critical services, is useful in the design of commercial building power systems, allowing cost-effective judgements to be made with respect to the installation of a second utility company service, an emergency generator, or possibly an uninterruptible power supply.

During 1974, the Reliability Subcommittee of the Industrial and Commercial Power Systems Committee completed a survey of the cost of electrical interruptions in commercial buildings in the United States. Included in this paper are the following results:

1 Cost of power outages to commercial buildings ($ per KWH of undelivered energy).

2 Cost of power outages to commercial buildings ($ per square foot/hr and $ per employee/hr).

3 Critical service loss duration time (length of time before an interruption causes a significant loss).

5 Miscellaneous items relative to provision of auxiliary generators, types of electrical service, and other physical data.

## Survey Form

The survey form is shown in Appendix A (two pages). A simple multiple choice or single line fill-in form was utilized in an attempt to reduce the time of the responders, but still provide pertinent data for a meaningful analysis.

## Response to Survey

A total of 48 companies reporting on 55 buildings responded to the survey with complete data. Incomplete data, omitting the critical outage cost information was received on 121 additional buildings. Unfortunately, this data was of no value in the present survey. Valid data was submitted almost equally for buildings located in the eastern, central, and western regions of the U.S.A.; with 43 percent of the buildings in downtown areas, 17 percent in urban areas, and 40 percent in suburban areas. Forty-six percent of the buildings were used 5 days per week; 39 percent, 6 days per week; and 15 percent, 7 days per week.

## Survey Data Preparation

All of the returned survey forms were reviewed. Useable data was punched onto computer cards for use in data processing.

## Survey Results -- Cost of Power Outages

Each respondent was asked to report on the cost of power outages as follows:

1 Dollars per failure -- 15-minute duration, one-hour duration, and greater than one-hour duration; total value of lost operation including wages, damages for delays, loss of computer time, and loss of retail sales minus cost of goods not sold was to be included.

2 Critical service loss duration time -- length of time before an interruption causes a significant loss.

3 Building maximum power demand, and usage, as well as area and number of employees.

The data made it possible to calculate the cost of power outages in terms of dollars per kilowatt-hours of undelivered energy at building peak load.

The average cost of power outages from the survey for the buildings surveyed is given in Table 1.

TABLE 1

AVERAGE COST OF POWER OUTAGES
FOR BUILDINGS IN THE UNITED STATES

| | |
|---|---|
| All commercial buildings | $7.21/KWH not delivered |
| Office buildings only | $8.86/KWH not delivered |

The average maximum demand was 3,095 KW for all commercial buildings reporting outage costs. The maximum demand for the office buildings was only 3,035 KW.

Additional details of the cost of power outages are given in Tables 2, 3, and 4. The tables present additional data including:

1 Outage costs for "office buildings" as a function of duration of outage for three time periods.

2 Effect of computers on outage costs.

3 Relationship of outage costs to: KWH not delivered, to cost per 1,000 square feet per hour of building affected, and to cost per employee per hour affected.

1/ Other members of Sub-Committee: A.D. Patton Chairman; C.R. Heising, Vice Chairman; C.E. Becker; M.F. Chamow; W.H. Dickinson; M.D. Harris; R.T. Kulvicki; D.W. McWilliams; R.W. Parisian; Stanley Wells

Copyright © 1998 IEEE. All rights reserved.

TABLE 2

OUTAGE COSTS FOR "OFFICE BUILDINGS"
AS A FUNCTION OF DURATION
(WITH AND WITHOUT COMPUTERS)

| | Sample Size | Maximum | Minimum | Average |
|---|---|---|---|---|
| 15-Minute Duration | | | | |
| Cost/peak KW hr. not delivered | 25 | $ 22.22 | $ 1.50 | $ 7.54 |
| Cost/1,000 sq. ft. of bldg./hr. | 26 | 247.6 | 10.5 | 63.8 |
| Cost/employee/hr. | 26 | 52.0 | 3.0 | 16.0 |
| 1-Hour Duration | | | | |
| Cost/peak KW hr. not delivered | 29 | $ 24.93 | $ 0.64 | $ 6.74 |
| Cost/1,000 sq. ft. of bldg./hr. | 32 | 125.00 | 5.24 | 53.12 |
| Cost/employee/hr. | 32 | 34.30 | 1.25 | 12.22 |
| Duration 1 Hour | | | | |
| Cost/peak KW hr. not delivered | 13 | $100.00 | $ 0.16 | $ 16.16 |
| Cost/1,000 sq. ft. of bldg./hr. | 14 | 320.00 | 1.05 | 68.06 |
| Cost/employee/hr. | 14 | 75.80 | 0.48 | 16.41 |

TABLE 3

OUTAGE COSTS FOR "OFFICE BUILDINGS"
AS A FUNCTION OF DURATION
(WITHOUT COMPUTERS)

| | Sample Size | Maximum | Minimum | Average |
|---|---|---|---|---|
| 15-Minute Duration | | | | |
| Cost/peak KW hr. not delivered | 11 | $ 10.70 | $ 1.50 | $ 5.84 |
| Cost/1,000 sq. ft. of bldg./hr. | 11 | 107.4 | 10.54 | 49.54 |
| Cost/employee/hr. | 11 | 28.56 | 3.00 | 12.56 |
| 1-Hour Duration | | | | |
| Cost/peak KW hr. not delivered | 13 | $ 13.33 | $ 0.91 | $ 5.30 |
| Cost/1,000 sq. ft. of bldg./hr. | 15 | 120.0 | 5.24 | 49.42 |
| Cost/employee/hr. | 15 | 28.57 | 1.25 | 10.64 |
| Duration 1 Hour | | | | |
| Cost/peak KW hr. | 3 | $100.00 | $ 1.97 | $ 36.66 |
| Cost/1,000 sq. ft. of bldg./hr. | 3 | 320.00 | 48.00 | 156.00 |
| Cost/employee/hr. | 3 | 50.00 | 4.00 | 27.52 |

TABLE 4

OUTAGE COSTS FOR "OFFICE BUILDINGS"
AS A FUNCTION OF DURATION
(WITH COMPUTERS)

| | Sample Size | Maximum | Minimum | Average |
|---|---|---|---|---|
| 15-Minute Duration | | | | |
| Cost/peak KW hr. not not delivered | 14 | $ 22.22 | $ 1.88 | $ 8.89 |
| Cost/1,000 sq. ft. of bldg./hr. | 15 | 250.00 | 16.57 | 78.21 |
| Cost/employee/hr. | 15 | 52.00 | 4.00 | 18.53 |
| 1-Hour Duration | | | | |
| Cost/peak KW hr. not delivered | 16 | $ 24.93 | $ 1.88 | $ 8.30 |
| Cost/1,000 sq. ft. of bldg./hr | 17 | 125.00 | 15.88 | 54.52 |
| Cost/employee/hr. | 17 | 34.30 | 4.00 | 13.62 |
| Duration 1 Hour | | | | |
| Cost/peak KW hr. not delivered | 10 | $ 67.66 | $ 0.16 | $ 9.81 |
| Cost/1,000 sq. ft. of bldg./hr. | 11 | 226.19 | 1.05 | 44.08 |
| Cost/employee/hr. | 11 | 75.82 | 0.48 | 12.70 |



Copyright © 1998 IEEE. All rights reserved.

TABLE 5

CRITICAL SERVICE LOSS DURATION TIME
FOR "ALL BUILDINGS"

| | Service Loss Duration Time | | | | | | | | |
|---|---|---|---|---|---|---|---|---|---|
| | 1 Cycle | 2 Cycles | 8 Cycles | 1 Sec. | 3 Sec. | 5 Min. | 30 Min. | 1 Hour | 12 Hours |
| Percent of buildings with critical service loss duration less than or equal to the time indicated. | 3% | 6% | 9% | 15% | 18% | 36% | 64% | 79% | 100% |

TABLE 6

CRITICAL SERVICE LOSS DURATION TIME
FOR "OFFICE BUILDINGS"

| | Service Loss Duration Time | | | | | | | | |
|---|---|---|---|---|---|---|---|---|---|
| | 1 Cycle | 2 Cycles | 8 Cycles | 1 Sec. | 3 Sec. | 5 Min. | 30 Min. | 1 Hour | 12 Hours |
| Percent of buildings with critical service loss duration less than or equal to the time indicated. | 5% | 10% | 15% | 25% | 30% | 50% | 70% | 75% | 100% |

TABLE 7

RELATIONSHIP OF AUXILIARY GENERATORS
AND SINGLE FEEDER SERVICE TO "ALL BUILDINGS"

| | Number of Responses | Buildings with Auxiliary Generation | No Auxiliary Generation and Only Single Feeder |
|---|---|---|---|
| Buildings with computers | 23 | 15 | 1 |
| Buildings without computers | 32 | 13 | 7 |
| TOTAL | 55 | 28 | 8 |

Survey Results -- Critical Service Loss Duration Time

The amount of time an electrical service can be interrupted before it causes significant losses is a question which our profession has not been able to suitably define. The results of the survey indicate that individual requirements for electrical energy are such that it is probably not possible to establish a general critical service loss duration time. The survey results are shown in Tables 5 and 6.

Copyright © 1998 IEEE. All rights reserved.

## APPENDIX C

TABLE 8

TYPE OF ELECTRICAL SERVICE
TO "ALL BUILDINGS"

| | Number of Responses | Type of Service | | | |
|---|---|---|---|---|---|
| | | Single Feeder | Network | Multiple Feeder | Other |
| Buildings with computers | 23 | 1 | 8 | 12 | 2 |
| Buildings without computers | 32 | 12 | 10 | 7 | 3 |
| TOTAL | 55 | 13 | 18 | 19 | 5 |

TABLE 9

PHYSICAL DATA -- "ALL BUILDINGS"

| Item | Sample Size | Maximum | Minimum | Average |
|---|---|---|---|---|
| Area, sq. ft. x $10^3$ | 54 | 2,085 | 3 | 400 |
| Number of floors | 55 | 52 | 1 | 12 |
| Number of employees | 51 | 7,000 | 12 | 1,384 |
| Annual usage - Megawatt hours | 52 | 101,349 | 210 | 11,973 |
| Peak Kilowatt demand | 52 | 17,250 | 95 | 3,095 |

TABLE 10

PHYSICAL DATA -- "OFFICE BUILDINGS"

| Item | Sample Size | Maximum | Minimum | Average |
|---|---|---|---|---|
| Area, sq. ft. x $10^3$ | 35 | 1,600 | 38 | 371 |
| Number of floors | 35 | 44 | 2 | 13 |
| Number of employees | 35 | 7,000 | 150 | 1,651 |
| Annual usage - Megawatt hours | 32 | 51,046 | 840 | 9,444 |
| Peak Kilowatt demand | 32 | 17,000 | 270 | 3,035 |

TABLE 11

AVERAGE OF PHYSICAL DATA
FOR "ALL BUILDINGS"
AND FOR "OFFICE BUILDINGS"

| Item | All Buildings | Office Buildings |
|---|---|---|
| Megawatt hours/1,000 sq. ft. of buildings area/year | 35.5 | 33.5 |
| Megawatt hours/employee/year | 20.2 | 7.5 |
| Peak Kilowatt demand/1,000 sq. ft. of building area | 11.3 | 11.5 |
| Peak Kilowatt demand/employee | 5.0 | 2.5 |
| Employees/1,000 sq. ft. of building area | 3.9 | 4.7 |

Thirty-six percent of "all buildings" reporting could be without electrical energy for 5 minutes before the lack of energy was considered to be critical, while 6 percent could be without energy for only 2 cycles and 3 percent for only one cycle before significant losses were incurred.

Fifty percent of the "office buildings" reporting could be without electrical energy for 5 minutes before the lack of energy was considered to be critical, while 10 percent could be without energy for only 2 cycles, and 5 percent for only one cycle before significant losses were incurred.

Precautionary measures taken to minimize critical outages in buildings where computers are installed are indicated in Table 7, where 65 percent (15 of 23) of the buildings reporting have auxiliary generating units. Only 4 percent (1 of 23) of the buildings reporting have no auxiliary generation and are served by a single feeder from the utility company. A like comparison is shown for buildings not having computers; in these instances, 41 percent of the buildings have auxiliary generation and 22 percent are served by single feeders from the utility company.

Table 8 shows the type of electrical service to all buildings reporting. Eighty-seven percent of the buildings with computers have network or multiple feeder service, while 53 percent of the buildings without computers have network or multiple feeder service.

Survey Results -- Demand and Usage Data

Each respondent was asked to report gross floor area, number of floors, number of employees, and electrical energy usage and demand. While not directly related to the subject of this paper, the data is of interest, and will perhaps allow the reader to make a better judgement of the validity of the data presented previously. The details are given in Tables 9, 10, and 11.



Copyright © 1998 IEEE. All rights reserved.

It is believed that the employee data for the "All Buildings" category may not be valid, since it appears that not all employees were reported for some multi-function buildings, the office/retail category in particular.

Conclusions and Discussion of Results

1 Cost of Power Outages (Tables 1, 2, 3, and 4)

a There is a wide spread in the cost of power outages (KWH not delivered) in commercial buildings. Even within like types of buildings, with or without computers, there is a great difference in the costs assigned.

b The cost per KWH not delivered increases greatly when the outage duration time exceeds one hour. An exception to this is buildings with computers.

It is probable that for outages of less than one hour, employees may remain partially productive and the temperature of their environment remains tolerable. For longer outages, employees may have to be furloughed for the remainder of the day.

c The cost of power interruptions for buildings with computers varies from $8.89/KWH average for outages of 15-minutes duration to $9.81/KWH for outages of greater than one hour. It is suspected that the small differential is due to the fact that a short duration as well as a long outage renders the computer inoperable, and the employees are either non-productive during this period or repairing possible damage caused by the outage.

d A comparison of the average costs of outages for commercial buildings with that for industrial plants (Reference 1) is shown in Table 12. The data is interpreted to mean that short-term outages in industrial plants could be more costly than those in commercial buildings, while long-term outages are more costly in commercial buildings.

e Additional information on the cost of power outages in Sweden, Norway, and the United States is contained in Reference 3.

2 Critical Service Loss Duration Time (Tables 5 and 6)

a As would be expected, there is a wide spread in the critical time of a power interruption. This is probably due to the wide variations of type of work being accomplished, the type of equipment involved, and the general work environment. For example, a windowless building in which a sensitive computer operation is performed would be more rapidly affected than a window-wall building performing normal office functions.

b It is suggested that a future survey attempt to define the reasons for the wide variances.

3 Demand and Usage Data (Tables 9, 10, and 11)

a Of the "all building" data reported, the areas averaged 400,000 square feet, 12 floors in height, with an annual usage of almost 12,000 megawatt hours, and a demand of 3,095 KW. Minimum and maximum data were not available.

TABLE 12

COMPARISON OF AVERAGE COSTS OF POWER OUTAGES
IN COMMERCIAL BUILDINGS AND INDUSTRIAL PLANTS

| Type | Cost |
|---|---|
| All commercial buildings | $7.21/KWH not delivered |
| Office buildings | $8.86/KWH not delivered |
| Industrial plants — all | $1.89/KW interrupted + $2.68/KWH not delivered |

The data for "office buildings" indicate average values within 10 percent of that for "all buildings," except for the number of employees, which is 16 percent greater.

b The average electrical usage for all buildings and for office buildings only is nearly equal when placed on a per unit basis (33.5 KWH/Sq. Ft.) as is the peak demand (11.3 Watts/Sq. Ft. to 11.5 Watts/Sq. Ft.). The relationship of usage and demand to employees does not correlate for all buildings and office buildings only. As mentioned heretofore, the validity of employee data with regard to the Office/Retail category of buildings is questionable. On this basis, no attempt to draw conclusions has been made.

References

1 A.D. Patton, et al, "Report of Reliability Survey of Industrial Plants, Part 4 - Additional Detailed Tabulation of Some Data Previously Reported in the First Three Parts," IEEE I & CPS Conference Record, June 2-6, 1974.

2 W.H. Dickinson, et al, "Report of Reliability Survey of Industrial Plants, Part 2 - Cost of Power Outages, Plant Restart Time, Critical Service Loss Duration Time, and Type of Loads Lost vs. Time of Power Outages," IEEE I & CPS Conference Record, May 14-16, 1973.

3 R.B. Shipley, A.D. Patton, J.S. Denison, "Power Reliability Cost vs. Worth," IEEE Transactions on Power Apparatus and Systems, PAS-91, P. 2204-2212, September/October 1972.

Copyright © 1998 IEEE. All rights reserved.

# SURVEY FORM ON COST OF ELECTRICAL INTERRUPTIONS IN COMMERCIAL BUILDINGS

THE INSTITUTE OF ELECTRICAL AND ELECTRONICS ENGINEERS, INC.

INDUSTRY AND GENERAL APPLICATIONS GROUP

RELIABILITY SUBCOMMITTEE OF THE INDUSTRIAL & COMMERCIAL POWER SYSTEMS COMMITTEE

*Electricity is an integral part of our every day life. If it isn't available -- what is its economic effect? Please help us to find out by filling out this form.*

*Please address reply to:*

A. D. Patton
Texas A & M University
Electric Power Institute
College Station, TX 77843

Date _____

1. COMPANY NAME (Fill in 3-letter abbreviation of name) _____

2. BUILDING NO. (Fill in sequence number 1, 2, 3, etc. for building(s) reported on) _____

3. BUILDING TYPE (Check type which best describes your building):

☐ Office ☐ Office/Retail Sales ☐ Office/Retail Sales/Apartment

☐ Retail Sales ☐ Other (describe) _____

4. BUILDING LOCATION (Check applicable items):

☐ Downtown; ☐ Urban; ☐ Suburban;

☐ USA: Eastern; ☐ USA: Central; ☐ USA: Western

5. BUILDING DATA - GENERAL

Gross Area, square feet _____

Number of Floors _____

Average Usage of Building: Hours/Day _____ Days/Week _____

Estimated Number of Office Employees (if any) _____

Estimated Annual Retail Sales (if any) _____

Is Auxiliary or Emergency Generation Provided: ☐ Yes ☐ No



Copyright © 1998 IEEE. All rights reserved.

SURVEY FORM - COMMERCIAL BUILDINGS IN USA



6. BUILDING ELECTRICAL USAGE DATA

Electrical Energy Usage for 12-month Period _____ KWH

Electrical Maximum Demand for this Period _____ KW

Type of Service: ☐ Single Feeder; ☐ Network; ☐ Multiple Feeders With Automatic Transfer

☐ Other (Explain) _____

7. COST OF A TOTAL INTERRUPTION OF ELECTRICAL SERVICE TO YOUR BUILDING DURING PEAK PERIOD: (Best Opinion - If no interruptions have occurred, assume hypothetical instances)

a) 15-Minute Duration $ _____

b) 1-Hour Duration $ _____

c) _____ Hours Duration $ _____

Does a, b, or c include losses from an "on-line" electronic computer? ☐ Yes ☐ No

For "Office Buildings" loss should include wages of all employees affected, plus any other direct costs incurred including delays, and damage to equipment. This would include any losses from an "on-line" electronic computer.

For "Retail Sales" cost should include estimated loss of sales minus cost of goods not sold, plus cost of any damage incurred.

8. LENGTH OF INTERRUPTION OF ELECTRICAL SERVICE

If there a definitive length of time before an interruption causes a significant loss? ☐ Yes ☐ No

If "Yes", what is maximum time before significant losses will be incurred? _____ Hours _____ Minutes

Copyright © 1998 IEEE. All rights reserved.

This page is intentionally blank

# Appendix D

## Reliability of Electric Utility Supplies to Industrial Plants

By
Power Systems Reliability Subcommittee
Industrial and Commercial Power Systems Committee
IEEE Industry Applications Society

**A. D. Patton,** *Chair*

C. E. Becker
M. F. Chamow
W. H. Dickinson
P. E. Gannon
M. D. Harris
Cr. R. Heising
R. T. Kulvicki
D. W. McWilliams
R. W. Parisian
S. J. Wells

**Industrial and Commercial Power Systems Technical Conference**
**Institute of Electrical and Electronics Engineers, Inc.**
**Toronto, Canada**
**May 5-8, 1975**

Reprinted from IEEE Conference Record
75CH0947-1-1A, pp. 131-133

Copyright © 1998 IEEE. All rights reserved.

This page is intentionally blank

# RELIABILITY OF ELECTRIC UTILITY SUPPLIES TO INDUSTRIAL PLANTS

by
Power Systems Reliability Subcommittee
Industrial and Commercial Power Systems Committee
A. D. Patton, Coordinating Author[1/]

## ABSTRACT

The paper summarizes the results of a 1974 survey of the reliability of electric utility supplies to industrial plants. Results include the average rates of occurrence and durations of power interruptions as a function of type of electric utility supply. This information should help industrial plant operators choose the types of electric utility supplies best suited to their plants.

## INTRODUCTION

The electric utility supply reliability survey reported here is a followup to the 1972 survey of the reliability of electrical equipment in industrial plants.[1,2] The 1972 survey showed that the electric utility supply is the most fallible "component" of an industrial plant system and therefore deserves careful consideration.

Certain of the data in the earlier survey were subject to possible error due to misinterpretation of the survey form. Hence, a prime objective of the present survey was to improve the accuracy of data on electric utility supplies. A second objective was to provide more detailed and definitive data on electric utility supply interruption rates and average durations as a function of the number of supply circuits, the type of switching scheme, and the voltage of the supply circuits. A third objective was to obtain data from a larger number of plants than in the 1972 survey thereby permitting interruption rates and average durations to be determined with greater precision. A total of 87 plants provided usable data, almost triple the number of plants providing data on electric utility supplies in the 1972 survey. Survey response broken down by industry is as follows: cement = 2, chemical = 14, metal = 4, petroleum = 30, pulp and paper = 1, rubber and plastics = 4, and other manufacturing = 32.

It should be emphasized that electric utility supply reliability is a function of a number of factors not directly identified in the data presented here. Included in these reliability-influencing factors are line exposure, weather and other environmental conditions, and utility operating and maintenance practice. Thus, the electric utility supply reliability data given in this paper represents average performance and should not be used in preference to specific data when this is available. Methods are available for computing the reliability performance of an electric utility supply when the reliability performance parameters of utility system components are known.[3]

## SURVEY QUESTIONNAIRE

The survey questionnaire requested the following data for each electric utility supply.

1. Type of industry
2. Type of electric utility supply
   a. Number of utility circuits supplying the plant
   b. Mode of operation if more than one supply circuit: all circuit breakers normally closed, manual throw-over scheme, or automatic throw-over scheme
   c. Voltage of utility circuits supplying the plant
   d. Type of supply circuits: overhead or underground
   e. A sketch of the electric utility supply system
3. The period of time covered by the survey report. (Respondents were asked to limit their response to the period January 1, 1968 to the present.)
4. The number of interruptions to the plant due to loss of the electric utility supply during the time period of (3).
5. The duration of each electric utility supply interruption, an indication whether service was restored to the plant by a switching operation or by repair or replacement of failed equipment, and, if known, the equipment which failed causing the interruption.

## SURVEY DATA SUMMARY AND DISCUSSION

Some respondents to the survey listed voltage dips which caused disruption of plant production as well as complete interruptions of electric utility service. Other respondents commented on production disruptions due to voltage dips without giving details. However, most respondents reported only on complete interruptions of service and this was the intent of the survey. The Subcommittee feels that the sensitivity to voltage dips is a rather unique characteristic of each plant and process and that average interruption rates including voltage dips would not be very meaningful. Therefore, all voltage dip events were removed from the survey data leaving only those interruptions due to complete loss of electric utility service. Hence, the interruption rates given in the summary tables reflect complete loss of electric utility service only. If a plant is sensitive to voltage dips, the rate of such events must be added to the reported interruption rates to obtain the total rate of production disruption due to utility supply troubles.

Almost all respondents indicated that utility supply circuits are overhead rather than underground. Hence, no effort was made to separate supplies with overhead and underground circuits. The data given in the summary tables essentially reflects overhead supply circuits due to the preponderance of such circuits in the survey response.

Preliminary analyses of utility supply interruption rates by industry category indicated no significant differences between industries. Further, there seems to be no good reason why utility supplies of the same type and voltage should differ between industries. Therefore, the data presented in the summary tables is not broken down by industry.

The survey response broken down by number of utility supply circuits, voltage of utility supply circuits, and mode of operation of multiple supply circuit utility supplies is given in Table I.

---

1/ Members of the Power Systems Reliability Subcommittee are: A. D. Patton, chairman, C. E. Becker, M. F. Chamow, W. H. Dickinson, P. E. Gannon, M. D. Harris, C. R. Heising, R. T. Kulvicki, D. W. McWilliams, R. W. Parisian, and S. Wells.

Copyright © 1998 IEEE. All rights reserved.

Table I
Number of Responding Plants
With Electric Utility Supplies
of Various Types

| | |
|---|---|
| **Number of Supply Circuits** | |
| 1 circuit | - 20 plants |
| 2 circuits | - 56 plants |
| 3 or more circuits | - 11 plants |
| **Supply Circuit Voltage** | |
| voltage ≤ 15 KV | - 22 plants |
| 15 KV < voltage ≤ 35 KV | - 17 plants |
| voltage >35 KV | - 48 plants |
| **Switching Scheme of Multiple Circuit Supplies** | |
| all breakers closed | - 45 plants |
| manual throwover | - 9 plants |
| automatic throwover | - 13 plants |

Table I shows that two-circuit supplies are the most common among the responding plants. A much smaller number of plants reported three or more supply circuits. All multiple-circuit supplies are combined in the data tables which follow because such supplies are expected to have similar interruption rates and because of the relatively small sample of supplies with three or more circuits. Responses have been broken into three voltage categories corresponding roughly to distribution voltages, subtransmission voltages, and transmission voltages. This was done because electric utility design and operating practice is rather different at these three function levels. Hence, it can be expected that utility supply reliability will be a function of the system level at which service is provided.

Table I indicates that about two-thirds of the responding plants having multiple circuit utility supplies operate with all circuit breakers closed. That is, service is supplied simultaneously over all supply circuits. Service may also be lost, however, by failures in the plant substation or by a widespread failure in the supplying utility's system. Plants having throwover schemes operate with a single circuit providing normal service. Thus, such plants suffer an interruption any time the normal supply circuit fails. The duration of interruption to such plants is usually limited to the time required to reclose the normal supply circuit or to switch to the alternate supply circuit if the normal circuit is permanently faulted.

Table II summarizes interruption rate and average interruption duration data for single-circuit utility supplies broken down by voltage level. Interruption rates and average durations are given separately for interruptions reported terminated by utility switching operations and by repair or replacement of failed components. Also given are overall interruption rates and average durations.

Tables III and IV show interruption rates and average durations for multiple circuit utility supplies broken down by switching scheme and by voltage level. Table V shows interruption rates and average durations for multiple-circuit utility supplies which operate with all circuit breakers closed broken down by voltage levels. Similar breakdowns by voltage for throwover switching schemes were not possible due to lack of an adequate data base.

Interruption rates and average durations are given in Tables II through V for interruptions where service is restored by: (a) some switching operation or sequence of switching operations in the electric utility system, and (b) repair or replacement of components which failed in the electric utility system. If service can be restored by some automatic or manual switching action in the electric utility system, whether remote or within the utility switchgear at the plant, interruptions are usually much shorter than if repair or replacement of failed components is required to restore service. The reason for providing data on both short-duration switching-terminated interruptions and on long-duration repair-terminated interruptions is because of possible differences in impact on plant operations.

It should be mentioned here that interruption rates and average durations computed from a small number of observed interruptions should be regarded as less accurate than those computed from a larger sample of observations. In particular, Reference [1] shows that interruption rates computed from an observed number of interruptions less than about 8 or 10 may well be in error by plus or minus 50 per cent or more due to random variations alone.

The data of Tables II through V show the expected trends.

(1) Utility supply interruption rates are lowest for multiple circuit supplies which operate with all circuit breakers closed and highest for single-circuit supplies. Tables II and III show that the interruption rate for single-circuit supplies is about six times that of multiple circuit supplies which operate with all circuit breakers closed. Interruption rates for multiple-circuit supplies which operate with a throwover scheme are comparable to those for single-circuit supplies, but throwover schemes have a smaller average interruption duration than single-circuit supplies.

(2) Interruption rates are highest for utility supply circuits operated at distribution voltages and lowest for circuits operated at transmission voltages.

Direct comparisons between interruption rates determined in this survey and in the 1972 survey are not possible in every case, but where possible show somewhat higher values in the present survey. Since the present survey is believed to be more accurate, has a larger data base, and is more up-to-date, the values presented here are to be preferred over those presented in 1972 survey.

REFERENCES

1. Reliability Subcommittee Report, "Report On Reliability Survey of Industrial Plants, Part I: Reliability of Electrical Equipment", IEEE Transactions on Industry Applications, pp. 213-235, March/April 1974.

2. Reliability Subcommittee Report," Report On Reliability Survey of Industrial Plants, Part III: Causes and Types of Failures of Electrical Equipment, the Methods of Repair, and the Urgency of Repair", Ibid., pp. 242-252, March/April 1974.

3. R. Billinton, R. J. Ringlee, and A. J. Wood, Power-System Reliability Calculations, The MIT Press, Cambridge, Mass., 1973.



Copyright © 1998 IEEE. All rights reserved.

Copyright © 1998 IEEE. All rights reserved.

Table II
Single Circuit Utility Supplies

| Voltage Level | Unit-years of History | Number of Interruptions Reported* $N_S$ | $N_R$ | Interruptions Per Year** $\lambda_S$ | $\lambda_R$ | $\lambda$ | Average Interruption Duration, Minutes** $r_S$ | $r_R$ | $r$ |
|---|---|---|---|---|---|---|---|---|---|
| v≤15KV | 27.62 | 25 | 75 | .905 | 2.715 | 3.621 | 3.5 | 165 | 125 |
| 15KV<v≤35KV | 12.67 | 0 | 21 | - | 1.657 | 1.657 | - | 57 | 57 |
| v>35KV | 71.16 | 37 | 60 | .527 | .843 | 1.370 | 1.5 | 59 | 37 |
| all | 111.45 | 62 | 156 | .556 | 1.400 | 1.956 | 2.3 | 110 | 79 |

Table III
Multiple Circuit Utility Supplies
All Voltage Levels

| Switching Scheme | Unit-Years of History | Number of Interruptions Reported $N_S$ | $N_R$ | Interruptions Per Year $\lambda_S$ | $\lambda_R$ | $\lambda$ | Average Interruption Duration, Minutes $r_S$ | $r_R$ | $r$ |
|---|---|---|---|---|---|---|---|---|---|
| all breakers closed | 246.17 | 63 | 14 | .255 | .057 | .312 | 8.5 | 130 | 31 |
| man. throw-over | 42.33 | 31 | 5 | .732 | .118 | .850 | 8.1 | 84 | 19 |
| auto. throw-over | 64.36 | 66 | 11 | 1.025 | .171 | 1.196 | 0.6 | 96 | 14 |
| all | 352.86 | 160 | 30 | .453 | .085 | .538 | 5.2 | 110 | 22 |

Table IV
Multiple Circuit Utility Supplies
All Swiching Schemes

| Voltage Level | Unit-Years of History | Number of Interruptions Reported $N_S$ | $N_R$ | Interruptions Per Year $\lambda_S$ | $\lambda_R$ | $\lambda$ | Average Interruption Duration, Minutes $r_S$ | $r_R$ | $r$ |
|---|---|---|---|---|---|---|---|---|---|
| v≤15KV | 81.31 | 52 | 12 | .640 | .148 | .788 | 4.7 | 149 | 32 |
| 15KV<v≤35KV | 78.00 | 39 | 5 | .500 | .064 | .564 | 4.0 | 115 | 17 |
| v>35KV | 193.55 | 69 | 13 | .357 | .067 | .424 | 6.1 | 184 | 34 |

Table V
Multiple Circuit Utility Supplies
All Circuit Breakers Closed

| Voltage Level | Unit-Years History | Number of Interruptions Reported $N_S$ | $N_R$ | Interruptions Per Year $\lambda_S$ | $\lambda_R$ | $\lambda$ | Average Interruption Duration, Minutes $r_S$ | $r_R$ | $r$ |
|---|---|---|---|---|---|---|---|---|---|
| v≤15KV | 45.61 | 8 | 4 | .175 | .088 | .263 | 0.7 | 335 | 112 |
| 15KV<v≤35KV | 52.61 | 18 | 1 | .342 | .019 | .361 | 7.0 | 120 | 13 |
| v>35KV | 147.95 | 37 | 9 | .250 | .061 | .311 | 11.0 | 203 | 49 |

*$N_S$ and $N_R$ are, respectively, the number of service interruptions terminated by switching and by repair or replacement.

**Interruption rates and average durations subscripted S and R are, respectively, rates and durations of interruptions terminated by switching and by repair or replacement. Unsubscripted rates and duration are overall values.



Copyright © 1998 IEEE. All rights reserved.

## Appendix E

# Report of Switchgear Bus Reliability Survey of Industrial Plants and Commercial Buildings

By
Power Systems Reliability Subcommittee
Power Systems Support Committee
Industrial Power Systems Department
IEEE Industry Applications Society

**P. O. O'Donnell,** *Coordinating Author*
**P. E. Gannon,** *Chair*

J. W. Aquilino
C. E. Becker
W. H. Dickinson
B. Douglas
I. Harley
C. R. Heising
D. Kilpatrick
D. W. McWilliams
R. N. Parisian
A. D. Patton
C. Singh
W. L. Stebbins
H. T. Wayne
S. J. Wells

**Industrial and Commercial Power Systems Technical Conference**
**Institute of Electrical and Electronics Engineers, Inc.**
**Cincinnati, Ohio**
**Jun. 5-8, 1978**

Published by
*IEEE Transactions on Industry Applications*
Mar./Apr. 1979, pp. 141-147

Copyright © 1998 IEEE. All rights reserved.

This page is intentionally blank

# Report of Switchgear Bus Reliability Survey of Industrial Plants and Commercial Buildings

Power Systems Reliability Subcommittee
Power Systems Support Committee
Industrial Power Systems Department

PAT O'DONNELL, MEMBER, IEEE
COORDINATING AUTHOR[1]

*Abstract*—The Power Systems Reliability Subcommittee of the IEEE Industry Applications Society has been conducting surveys of the reliability of electrical equipment in industrial plants and commercial buildings. Switchgear bus was included in a previous survey published in 1973 and 1974 [1] and generated some controversy concerning bare and insulated bus. For this reason, and also for an ongoing effect to continually update the 1973 and 1974 survey [1], switchgear bus reliability has been investigated in a new survey in 1977, and the results are presented. Reference is made to a paper [2] given at the 1977 Industrial and Commercial Power Systems Technical Conference on reasons for conducting the new survey.

## INTRODUCTION

CURRENT reliability data on failure rate of electrical equipment can provide a valuable tool for the power systems designer or planner. These data can also be a valuable tool for the manufacturer of the equipment concerned.

Many parameters were included in this new survey in an effort to uncover the most influencing factors on the reliability of bare bus and insulated bus and to allow any new obvious and significant applications considerations to be identified. The questionnaire submitted was condensed to a practical and useful form to obtain optimum response in as short of time period as possible.

Results of the survey are presented in tabular form, and discussion is included primarily where adequate response and population data were obtained. Many questions and uncertainties still exist, and the intent of the following presentation is to report the results of the survey with some discussion, but drawing of definite conclusions is left to the reader.

## SURVEY FORM

The questionnaire form (Fig. 1) and cover letter used in the survey are included in the Appendix. Total populations data categorize information into major areas of application. An area of primary concern is maintenance because of its obvious relation to failure rate. However, this is the most difficult datum to obtain in complete and uniform format for meaningful results. Responses in this survey did not permit these results to appear, partly due to the respondents' failure to submit information and partly due to the survey format.

Failed unit data were requested in the form shown in the second portion of the questionnaire. The major categories are causes of failure, types of failure, duration of failure, and failed components. This form is less extensive, but more specifically oriented for switchgear bus than in 1973 and 1974 survey [1].

## SURVEY RESPONSE

Table I summarizes the survey response including number of buses, companies, and plants. In this survey, bus "unit-year" is defined as the product of the total number of switchgear connected circuit breakers and connected switches reported in a category times the total exposure time. In the previous survey, the unit-year did not include the number of connected switches; that is, only the connected circuit breakers were counted. Table II shows the 1973 and 1974 [1] survey and is included for comparison of responses. The total number of plants in the new survey response is considerably greater than in the 1973 and 1974 survey, but it is interesting to note that unit-year sample size is slightly less. Also some discrepancy appears in the total number of failures reported in Table I and those of some subcategories in tables to follow. This is due to all companies not responding to every category.

## SURVEY RESULTS

### *Insulated and Bare Bus*

A major controversy emerged in the results of the 1973 and 1974 survey [1] concerning bare and insulated switchgear bus. Insulated bus, 601-15 000 V, showed a higher failure rate than bare bus, above 600 V, but data were heavily influenced by the chemical industry. The new survey shows the opposite of this, as seen in Table I, with less chemical industry influence. Bare bus, above 600 V, shows a relatively high failure rate, but the sample size is not large, thus making this observation somewhat questionable. With more companies responding in the

Paper ISPD approved by the Power Systems Protection Committee of the IEEE Industry Applications Society for presentation at the 1978 Industrial and Commercial Power Systems Technical Conference, Cincinnati, OH, June 5-9. Manuscript released for publication October 25, 1978.

The author is with El Paso Natural Gas Company, El Paso, TX 79978.

[1] Other members of the subcommittee are Phillip E. Gannon (Chairman), J. W. Aquilino, Carl E. Becker, W. H. Dickinson, Bruce Douglas, Ian Harley, C. R. Heising, Don Kilpatrick, D. W. McWilliams, R. N. Parisian, A. D. Patton, Dr. Chanan Singh, Wayne L. Stebbins, Harold T. Wayne, and Stanley J. Wells.

Copyright © 1998 IEEE. All rights reserved.

Company Name and Plant: _____ _____

Industry Type: _____

Period Reported - From: Month _____ Year _____

To: Month _____ Year _____

Plant Climate: Temperature _____ Relative Humidity _____

Contamination Level and Type: _____

Total Population:

| | Bus No. | No. CB's & SW's | Age of Bus (YRS) | Bare | Insulated | Outdoor | Indoor | Copper | Aluminum | L-L Voltage (KV) | Current (KA) | L-L Voltage (KV) | Ungrounded | Solid Ground | Imped. Ground | Maint Cycle (MO) | Extent of Maintenance |
|---|---|---|---|---|---|---|---|---|---|---|---|---|---|---|---|---|---|
| | | | | | Bus Type and Rating | | | | | | | System Application | | | | Maintenance Data | |
| 1 | | | | | | | | | | | | | | | | | |
| 2 | | | | | | | | | | | | | | | | | |
| 3 | | | | | | | | | | | | | | | | | |
| 4 | | | | | | | | | | | | | | | | | |
| 5 | | | | | | | | | | | | | | | | | |
| 6 | | | | | | | | | | | | | | | | | |

Failed Unit Data:

| Bus No. | Failure Primary Cause | Failure Contributing Cause | Short L-G | Short L-L | Open | Other | Last Maint. (MO) | Round Clock | Normal Hours | Schedule Later | Failure Duration (Hrs.) | Failed Component and Material |
|---|---|---|---|---|---|---|---|---|---|---|---|---|
| | | | Type of Failure | | | | | Restore Data | | | | |
| | | | | | | | | | | | | |
| | | | | | | | | | | | | |
| | | | | | | | | | | | | |
| | | | | | | | | | | | | |
| | | | | | | | | | | | | |
| | | | | | | | | | | | | |

Fig. 1. Switchgear bus reliability survey for metalclad and metal enclosed switchgear bus.


Copyright © 1998 IEEE. All rights reserved.

new survey but with less overall unit-year sample size, the failure rate for all bus shows to be slightly higher than in the previous survey. But on breaking this down further, bare bus failure rate is higher and insulated bus failure rate is lower in the new survey.

Table I shows the chemical industry data broken out since it is believed to be a major contributor in the controversy of the 1973 and 1974 survey [1]. In the new survey the chemical industry dominated the number of failures in each category, but did not dominate sample sizes. This supports the argument of some that bus utilized in the chemical industry should have a relatively high failure rate, especially in the use of bare bus.

Table I also shows median outage duration time after a failure of each category, in hours per failure. It is important to emphasize that these data are based on many factors, and without sufficient supplement from respondents concerning operating procedures, maintenance type, spare parts inventory, etc., the data relate to a very general or all-inclusive type of information.

*Grounding Type*

Survey results are shown in Tables III–V. Inadequate response and the general nature of the questionnaire format prohibit sufficient results for this category. It is believed that grounding type related to failures is important data, but data should be specific, for example, in types of failures in ungrounded systems and in impedance value of impedance grounded systems. This category may be pursued in greater detail in the next survey.

TABLE I
SWITCHGEAR BUS: INDOOR AND OUTDOOR

| NUMBER OF COMPANIES | NUMBER OF PLANTS IN SAMPLE-SIZE | NUMBER OF BUSES | SAMPLE SIZE UNIT-YR | NUMBER OF FAILURES REPORTED | INDUSTRY | EQUIPMENT SUB-CLASS | FAILURE RATE FAILURE PER UNIT-YEAR | MEDIAN HOURS DOWNTIME PER FAILURE |
|---|---|---|---|---|---|---|---|---|
| 39 | 56 | 444 | 51391 | 54 | ALL | ALL | .001050 | 28 |
| 28 | 36 | 245 | 24855 | 28 | ALL | INSULATED ABOVE 600V | .001129 | 28 |
| 25 | 35 | 199 | 26592 | 26 | ALL | BARE (ALL VOLTAGES) | .000977 | 28 |
| 17 | 23 | 132 | 22420 | 18 | ALL | BARE 0-600V | .000802 | 27 |
| 14 | 18 | 67 | 4172 | 8 | ALL | BARE ABOVE 600V | .001917 | 36 |
| 14 | 19 | 92 | 7425 | 15 | PETROLEUM CHEMICAL | INSULATED ABOVE 600V | .002020 | 40 |
| 11 | 13 | 135 | 7002 | 18 | PETROLEUM CHEMICAL | BARE (ALL VOLTAGES) | .002570 | 28 |
| 10 | 11 | 83 | 4707 | 13 | PETROLEUM CHEMICAL | BARE 0-600V | .002761 | 22 |
| 7 | 8 | 52 | 2295 | 5* | PETROLEUM CHEMICAL | BARE ABOVE 600V | * | 48 |

* Small sample-size.

TABLE II
RESULTS OF PREVIOUS SURVEY PUBLISHED IN 1973 AND 1974 [1]
SWITCHGEAR BUS: INDOOR AND OUTDOOR

| NUMBER OF PLANTS SAMPLE-SIZE | SAMPLE SIZE (UNIT-YEAR) | NUMBER OF FAILURES REPORTED | INDUSTRY | EQUIPMENT SUB-CLASS | FAILURE RATE FAILURES PER UNIT-YEAR | ACTUAL HOURS DOWNTIME/FAILURE INDUSTRY AVERAGE | MINIMUM PLT. AVG. | MEDIAN PLT. AVG. | MAXIMUM PLT. AVG. |
|---|---|---|---|---|---|---|---|---|---|
| 12 | 11740 | 20 | ALL | INSULATED 601-15000V | 0.001700 | 261 | 5 | 26.8 | 1613 |
| 12 | 32280 | 11 | ALL | BARE 0-600V | 0.000340 | 550 | 2 | 24 | 2520 |
| 5 | 20560 | 13 | ALL | BARE >600V | 0.000630 | 17.3 | 6.9 | 13 | 48 |
| 5 | 4003 | 15 | PETROLEUM CHEMICAL | INSULATED 601-15000V | 0.003750 | 340 | 18 | 26.8 | 1613 |
| 3 | 17270 | 10 | PETROLEUM CHEMICAL | BARE >600V | 0.000580 | 19.3 | 6.9 | 42 | 48 |

Copyright © 1998 IEEE. All rights reserved.

## TABLE III
## TYPE OF GROUNDING OVERALL, BUS INSULATED AND BUS BARE

| (Unit-Year) | UNGROUNDED | SOLID-GROUND | IMPEDANCE-GROUND | NOT REPORTED | TOTAL |
|---|---|---|---|---|---|
| Sample-Size | 20262 | 9787 | 17280 | 4062 | 51391 |
| # FAILURE | 17 | 12 | 23 | 2* | 54 |
| FAILURE RATE | .000839 | .001226 | .001331 | - | .001050 |

* Small sample size.

## TABLE IV
## BUS INSULATED

| (Unit-Year) | UNGROUNDED | SOLID-GROUND | IMPEDANCE-GROUND | NOT REPORTED | TOTAL |
|---|---|---|---|---|---|
| Sample-Size | 4626 | 4274 | 14270 | 1685 | 24855 |
| # FAILURE | 7* | 4* | 16 | 1* | 28 |
| FAILURE RATE | | | .001121 | - | .001126 |

* Small sample size.

## TABLE V
## BUS BARE

| (Unit-Year) | UNGROUNDED | SOLID-GROUND | IMPEDANCE-GROUND | NOT REPORTED | TOTAL |
|---|---|---|---|---|---|
| Sample-Size | 15636 | 5513 | 3010 | 2377 | 26536 |
| # FAILURE | 10 | 8 | 7* | 1* | 26 |
| FAILURE RATE | .000640 | .001451 | | | .000980 |

* Small sample size.



Copyright © 1998 IEEE. All rights reserved.

TABLE VI
AVERAGE AGE OF SWITCHGEAR BUS

| | ALL | INSULATED | BARE |
|---|---|---|---|
| AGE 1-10 yrs. | 6526 unit-year | 1899 unit-year | 4627 unit-year |
| >10 yrs. | 44596 unit-year | 22887 unit-year | 21709 unit-year |

*Age of Bus*

Tables VI–VIII illustrate how failures of insulated and bare bus relate to age in this survey. An interesting observation here is that newer bus appears to experience a higher failure rate than older bus. This might be expected if one considers improper installation, new components failure rate, type of construction of new switchgear, etc. As discussed below under "causes" of failures, the logicality of this observation is not consistent.

As incoming data were analyzed, it became apparent that the period reported (it was assumed that the period reported was the period of best kept records) and the age of bus did not correlate as well as expected in every case, a fallacy in the questionnaire format perhaps. Note that the older bus sample size is much larger.

*Indoor and Outdoor Bus*

The results of this category are summarized in Tables IX–XI below. Table XI shows an overall result of outdoor bus failure rate versus indoor bus failure rate. Outdoor bus shows a higher failure rate than indoor bus, an observation not too surprising.

*Failure Duration*

Failure duration results are reported in Tables XII and XIII below and categorized into repair on a round-the-clock emergency basis and repair on a normal working hour basis. This adds more meaning to the data in Table I, but would be more meaningful if repair methods were known. Urgency of repair as shown in Table XIV reveals that most repairs were made on an emergency basis. The data of these tables compare very favorable with those of the previous survey.

*Type of Maintenance*

Response was disappointingly low in this category and results are presented in Tables XV and XVI. The tables show results of maintenance cycles and time since last maintenance in three groups: 1) less than 12 months, 2) 12–24 months, and 3) more than 24 months. This is a very important category regarding reliability, and hopefully the next survey will produce better results.

*Causes of Failures*

Primary and contributing causes of failures are summarized in Tables XVII and XVIII. As might be expected inadequate maintenance is a large contributor to failures. This does not necessarily follow from the observation above on age of bus. However, defective components are a large primary cause of failures, which is logical for new installations. Correlation between the two tables below is clearly evident from the contributing cause of exposure to contaminants and the primary cause of inadequate maintenance. Exposure to contaminants, which includes dust, moisture, and chemicals, also supports the data showing outside bus with a relatively high failure rate. Inadequate maintenance was reported as the single largest primary cause of failures in the 1973 and 1974 survey [1]. This prompted the effort to survey type of maintenance in the new survey.

TABLE VII
NUMBER OF FAILURES VERSUS AGE

| | ALL | INSULATED | BARE |
|---|---|---|---|
| AGE 1-10 yrs. | 15 | 5* | 10 |
| >10 yrs. | 37 | 23 | 14 |

* Small sample size.

TABLE VIII
FAILURE RATE (FAILURE PER UNIT-YEAR)

| | ALL | INSULATED | BARE |
|---|---|---|---|
| AGE 1-10 yrs. | .002298 | * | .002161 |
| >10 yrs. | .000829 | .001005 | .000645 |

* Small sample size.

TABLE IX
SWITCHGEAR BUS INSULATED

| | OUTDOOR | INDOOR |
|---|---|---|
| Sample-Size Unit-Year | 4275 | 20356 |
| FAILURE | 7* | 19 |
| FAILURE RATE | * | .000933 |

* Small sample size.

TABLE X
SWITCHGEAR BUS BARE

| | OUTDOOR | INDOOR |
|---|---|---|
| Sample-Size Unit-Year | 2750 | 22339 |
| FAILURE | 8 | 11 |
| FAILURE RATE | .002909 | .000492 |

Copyright © 1998 IEEE. All rights reserved.

## TABLE XI
## SWITCHGEAR BUS (OVERALL)

| | OUTDOOR | INDOOR |
|---|---|---|
| Sample-Size Unit-Year | 7825 | 42695 |
| FAILURE | 15 | 30 |
| FAILURE RATE | .001917 | .000703 |

## TABLE XII
## FAILURE DURATION: ROUND CLOCK VERSUS NORMAL HOUR (HOURS DOWNTIME PER FAILURE)

| FAILURE REPAIR URGENCY | BUS INSULATED MEDIAN | BUS INSULATED AVERAGE | BUS BARE MEDIAN | BUS BARE AVERAGE |
|---|---|---|---|---|
| ROUND CLOCK | 24 hr. | 87 hr. | 32 hr. | 39 hr. |
| NORMAL HOUR | 240 hr. | 430 hr. | 24 hr. | 154 hr. |

## TABLE XIII
## FAILURE DURATION: ROUND CLOCK VERSUS NORMAL HOUR (HOURS DOWNTOWN PER FAILURE)

| | BUS INSULATED ROUND CLOCK | BUS INSULATED NORMAL HOUR | BUS BARE ROUND CLOCK | BUS BARE NORMAL HOUR |
|---|---|---|---|---|
| 25 PERCENTILE | 8 hr. | 8 hr. | 3 hr. | 4 hr. |
| 50 PERCENTILE | 24 hr. | 240 hr. | 32 hr. | 24 hr. |
| 75 PERCENTILE | 48 hr. | 350 hr. | 48 hr. | 48 hr. |

## TABLE XIV
## FAILURE REPAIR URGENCY

| | ROUND CLOCK | NORMAL HOUR | SCHEDULE LATER |
|---|---|---|---|
| BUS INSULATED | 64% | 28% | 8% |
| BUS BARE | 53% | 41% | 6% |

## TABLE XV
## NUMBER OF SWITCHGEAR BUS-INSULATED FAILURES VERSUS MAINTENANCE CYCLE

| | LESS THAN 12 MO. | 12-24 MO. | MORE THAN 24 MO. |
|---|---|---|---|
| Sample-Size (Unit-Year) | 3563 | 8812 | 7253 |
| # FAILURE | 2* | 13 | 6* |
| FAILURE RATE | - | .001475 | |

* Small sample size.



Copyright © 1998 IEEE. All rights reserved.

## TABLE XVI
## NUMBER OF SWITCHGEAR BUS BARE FAILURES VERSUS MAINTENANCE CYCLE

| | LESS THAN 12 MO. | 12-24 MO. | MORE THAN 24 MO. |
|---|---|---|---|
| Sample-Size (Unit-Year) | 980 | 10,455 | 6312 |
| # FAILURE | 2* | 12 | 4* |
| FAILURE RATE | - | .001147 | - |

* Small sample size.

## TABLE XVII
## SUSPECTED PRIMARY CAUSE OF FAILURE

| BUS INSULATED | BUS BARE | |
|---|---|---|
| 26% | 17% | 1. Defective Component |
| 4% | 4% | 2. Improper Application |
| 7% | 9% | 3. Improper Handling |
| 7% | 13% | 4. Improper Installation |
| 19% | 22% | 5. Inadequate Maintenance |
| - | 18% | 6. Improper Operating Procedure |
| 11% | 4% | 7. Outside Agency - Personnel |
| 26% | - | 8. Outside Agency - Other |
| - | 13% | 9. Overheating |

## TABLE XVIII
## CONTRIBUTING CAUSE TO FAILURE

| BUS INSULATED | BUS BARE | |
|---|---|---|
| 6.6% | - | 1. Thermocycling |
| 3% | 8% | 2. Mechanical Structure Failure |
| 6.6% | - | 3. Mechanical Damage From Foreign Source |
| - | 15% | 4. Shorting By Tools or Metal Objects |
| 3% | - | 5. Shorting By Snakes, Birds, Rodents, etc. |
| 10% | 4% | 6. Malfunction of Protective Device |
| | 4% | 7. Improper Setting of Protective Device |
| 3% | - | 8. Above Normal Ambient Temperature |
| 3% | 15% | 9. Exposure to Chemical or Solvents |
| 30% | 15% | 10. Exposure to Moisture |
| 10% | 19% | 11. Exposure to Dust or Other Contaminants |
| 6.6% | - | 12. Exposure to Non-Electrical Fire or Burning |
| - | 8% | 13. Obstruction of Ventilation |
| 10% | 4% | 14. Normal Deterioration from Age |
| 3% | 4% | 15. Severe Weather Condition |
| - | 4% | 16. Testing Error |

## TABLE XIX
## FAILURE TYPE

| BUS INSULATED | BUS BARE | |
|---|---|---|
| 57% | 33% | 1. Short L-G |
| 40% | 60% | 2. Short L-L |
| - | 7% | 3. Open |
| 3% | - | 4. Other |

*Failure Type*

The survey results on types of failures, shown in Table XIX, show a surprisingly high percentage of failures line-to-line.

GENERAL DISCUSSION

At this point it is well to note the confidence intervals of failure rate for bare and insulated bus. Table XX shows the limits for a 90 percent confidence interval. The table illustrates the statistical limits within which 90 percent of the failures could be expected to occur.

Lack of specific details limits the integrity of some data, and as previously indicated not all categories surveyed were reported in this paper, due primarily to small sample sizes and numbers of failures. As with most surveys, accurate data combined with large response are difficult to obtain since response definitely relates to simplicity in questionnaire format. Data of the effect of maintenance on failure rate are highly desirable for obvious reasons, and effort will be made to acquire this data in the future in a meaningful and usable form.

## TABLE XX
## CONFIDENCE INTERVALS FOR FAILURE RATE λ

| FAILURE RATE (λ) FAILURE PER UNIT-YR | INSULATED BUS >600V | BARE BUS > 600V | BARE BUS ≤ 600V |
|---|---|---|---|
| λ L * | .000779 | .000958 | .000521 |
| λ | .001129 | .001917 | .000802 |
| λ U * | .001569 | .003488 | .001203 |
| % DEVIATION - L | 31% | 50% | 35% |
| % DEVIATION - U | 39% | 82% | 50% |

* Upper and lower limits of 90 percent confidence interval for λ

Copyright © 1998 IEEE. All rights reserved.

## APPENDIX

A. D. Patton
Texas A & M University
Department of Electrical Engineering
College Station, Texas 77843

Dear Sir:

RE: Switchgear Bus Reliability Survey for Metalclad and Metal Enclosed Switchgear

The Reliability Subcommittee of the Industrial and Commercial Power Systems Committee requests your cooperation in a survey to determine the reliability of metal-clad and metal-enclosed switchgear bus in industrial plants. The survey is a follow-up to the general reliability survey of plant equipment in 1971 and is intended to provide more meaningful data on switchgear bus. Attached for your information is a report by the subcommittee on reasons for the survey.

The results of the survey will be published in an IEEE paper and are expected to be of value to system planners and designers in the reliability evaluation of alternatives. Individual responses will be held in confidence and only summaries published.

### SURVEY INSTRUCTIONS

It is hoped that the survey form is reasonably self-explanatory. Nevertheless, a sample filled-out data sheet is attached for your guidance, and some brief instructions follow. We wish to emphasize that all requested data are important, but it is realized that some of the requested information may be unknown. In such cases, simply provide the information which is known and leave the other spaces blank. We also encourage you to provide explanatory comments on any of your data as you feel appropriate. If additional data sheets are needed, please duplicate the data sheet provided.

*General Data*

1) It is vitally important that the period reported be given.
2) The plant climate and contamination data should be your general estimates of the requested information.

*Total Population Data*

1) Using the total population data block, give requested data for all buses *in service during the period reported* whether or not failures have been experienced. (Note the period reported may not exceed the age of a bus. Use separate data sheets for newer busses.)
2) It is vitally important that the number of connected circuit breakers and switches be given for each bus.

*Failed Unit Data*

1) List each bus failure event separately.
2) Identify the bus in each failure event by specifying the bus number as assigned in the total population data block.
3) Specify failure cause and contributing cause, where known, using the code numbers on the attached sheet.
4) Specify months since bus was last maintained.
5) Check off urgency of restoration effort.
6) Specify time in hours from onset of failure until bus was restored to service.
7) Describe component which first failed, including component material.

Our schedule dictates that responses be received no later than April 1, 1977. Your participation in this project will be greatly appreciated.

Sincerely,

A. D. Patton
Chairman, Reliability Subcommittee

### SURVEY QUESTIONNAIRE

*Primary Cause of Failure:*

1) defective component,
2) improper application,
3) improper handling,
4) improper installation,
5) inadequate maintenance,
6) improper operating procedures,
7) outside agency–personnel,
8) outside agency–other,
9) overheating.

*Contributing Cause to Failure:*

1) persistent overloading,
2) transient overvoltage,
3) overvoltage,
4) thermocycling,
5) mechanical structural failure,
6) mechanical damage from foreign source,
7) shorting by tools or metal objects,
8) shorting by snakes, birds, rodents, etc.,
9) malfunction of protective device,
10) improper setting of protective device,
11) above normal ambient temperature,
12) below normal ambient temperatures,
13) exposure to chemicals or solvents,
14) exposure to moisture,
15) exposure to dust or other contaminants,
16) exposure to non-electrical fire or burning,
17) obstruction of ventilation,
18) normal deterioration from age,
19) severe weather conditions,
20) loss or deficiency of cooling medium,
21) testing error.

Comments:

### REFERENCES

[1] IEEE Committee Report, "Report on reliability survey of industrial plant," *IEEE Trans. Ind. Appl.*, Mar./Apr., July/Aug., and Sept./Oct., 1974. (Part 1–Reliability of electrical equipment; Part 3–Causes and types of failures of electrical equipment, the methods of repair, and the urgency of repair; Part 5–Plant climate, atmosphere and operating schedule, the average age of electrical equipment, percent production lost, and the method of restoring electrical service after a failure; Part 6–Maintenance quality of electrical equipment.)

[2] IEEE Committee Report, "Reasons for conducting a new reliability survey on switchgear bus-insulated and switchgear bus-bare," Industrial and Commercial Power System Tech. Conf., May 1977, Conf. Rec., p. 91-95.


Copyright © 1998 IEEE. All rights reserved.

## Appendix F

## Working Group Procedure for Conducting an Equipment Reliability Survey

**By**
**Power Systems Reliability Subcommittee**
**Power Systems Technology Committee**
**Industrial Power Systems Department**
**IEEE Industry Applications Society**

Procedure 1
Compiled Dec. 8, 1980; Approved May 4, 1981

Copyright © 1998 IEEE. All rights reserved.

This page is intentionally blank

# WORKING GROUP PROCEDURE FOR CONDUCTING AN EQUIPMENT RELIABILITY SURVEY

POWER SYSTEMS RELIABILITY SUBCOMMITTEE
POWER SYSTEMS TECHNOLOGY COMMITTEE
INDUSTRIAL POWER SYSTEMS DEPARTMENT
IEEE INDUSTRY APPLICATIONS SOCIETY

Scope: Conduct an equipment reliability survey of industrial plants and commercial buildings. Keep anonymous the names of those who submit data. Do not collect the equipment manufacturer's name. Publish an IEEE Working Group report. Collect data that may be included in future versions of IEEE Standard 493-1980, "IEEE Recommended Practice for the Design of Reliable Industrial and Commercial Power Systems". This will include failures, population and unit-years, outage duration time after failure, and other information that are considered important.

Review Approval: The final IEEE Working Group report must be approved before publication by the Chairman, Power Systems Reliability Subcommittee and anyone else that he delegates. Other members of the Power Systems Reliability Subcommittee may ask to review the IEEE Working Group report before the Chairman and/or his delegates give their approval, but they do not have a veto over what is published.

Steps:

1. The Power Systems Reliability Subcommittee (PSRS) will determine the equipment category to be surveyed.

2. The PSRS Chairman will appoint a Working Group Chairman. The Working Group Chairman (WGC) will select the members of the Working Group, subject to approval by the PSRS Chairman. Usually the WG will include a WGC from a previous survey who is familiar with conducting a reliability survey. It is expected that the WGC will do the most work, including survey preparation, data collection, data analysis, and will be the coordinating author of the final report and will present the report at an IEEE technical conference. The PSRS Chairman will compile a budget and submit it to IAS for approval.

3. The WGC will compile a schedule for steps 4 through 15.

4. The WGC will review previous reliability surveys (AIEE 1962 and IEEE 1973/1974, etc.) on this equipment category, if available, and will compile a report summarizing previous survey results and why the new survey is being conducted. This report will be used in the survey and will be sent out with the survey form to the prospective participants. In some cases in the past this report has become an IEEE paper at an IEEE conference (but this is not encouraged).

Copyright © 1998 IEEE. All rights reserved.

5. The WGC will compile a draft form for the survey and will send it to the members of the WG. In general the new survey will be a refinement of the previous version, geared to resolving questions raised by the past surveys. He will compile a second version, third version, etc. as necessary and develop a final form incorporating comments received from Working Group members.

6. The WGC will ask all members of the PSRS: 1) if they wish to review the final form and, 2) if they wish to review the final WG report after the survey is completed. He will send copies to those who request it and should request comments back within twelve days.

7. The final form should be approved by the PSRS Chairman and those he has delegated. However, responses that take longer than two weeks may be considered "approval by default".

8. The WGC will have the material for the survey printed (cover letter on IEEE stationery, form & definitions, reasons for survey). He will obtain the mailing list from the Chairman, Mailing List Working Group. He will review the list and augment it if appropriate. The WGC will buy postage stamps and send the survey material out for the survey. A return envelope and postage will be included and a requested return date will also be included. The WGC will keep track of negative, moved, or deceased responses for feedback to the Mailing List Chairman.

9. A follow up letter will be sent out by the WG Chairman to all participants about 8 weeks later. This always brings in additional responses.

10. An oral pep talk (3 minutes long) should be given by WGC during a technical session at the I & CPS Conference (if the timing is convenient).

11. After the "cut off" date, the WGC will analyse and tabulate the results from the survey. (An attempt should be made to contact respondents for clarification of incomplete or inconsistent data). They will be sent to the WG members for comments and suggestions for additional analysis and for what should go into the WG report.

12. The WGC will compile a first draft WG report and will send a copy to the members for comments. A second draft, third draft will be compiled as needed. A final WG report will be compiled.

13. The final WG report will be sent to the PSRS Chairman and those he has delegated for approval. Fourteen days will be allowed for their review. The final WG report will also be sent to those PSRS members who have requested it in step 6, and comments should be requested back within twelve days.


Copyright © 1998 IEEE. All rights reserved.

14. The WG Chairman will have the approved final WG report typed on model paper for presentation at an IEEE technical conference. Only those who have contributed as Working Group members, or by commenting on the survey or report drafts should be listed as authors; the WGC will obtain written approval from each co-author to use their names on the report. Approval of the final report by those who request it to review should be adequate approval to use names. A copy of this paper should be sent to all members of the PSRS; written discussions should be invited back from them. Other solicitations for discussions are also encouraged as deemed appropriate by the WGC or the PSRS Chairman.

15. The WG Chairman should present the final WG report at the IEEE Conference. An alternate from the WG should be designated, by the WGC, to present the paper in his absence.

It is believed that the total time cycle for steps 1 through 15 is about two years.

Charles R. Heising

Charles R. Heising
Secretary
Power Systems Reliability Subcommittee

CRH:sk

Copyright © 1998 IEEE. All rights reserved.

THE INSTITUTE OF ELECTRICAL AND ELECTRONICS ENGINEERS, INC.

**INDUSTRY APPLICATIONS SOCIETY**

TYPICAL MAJOR MILESTONE SCHEDULE
for
EQUIPMENT RELIABILITY SURVEYS

YEAR 1:

1. May/June (I&CPS Conference) PSRSC Chairman appoints WG Chairman.
2. October (IAS Conference) WG Chairman presents first draft of survey form to WG.
3. November/December. WG Chairman finalizes survey form and obtains approval from PSRSC Chairman.

YEAR 2:

4. January/February. WG Chairman mails survey form to industries.
5. March/April. WG Chairman mails follow-up letter to industries.
6. May/June (I&CPS Conference) WG Chairman presents a pep talk to Conference, outlining reasons for survey.
7. August/September. WG Chairman evaluates data received; compiles first draft of report.
8. September/October (IAS Conference) WG Chairman reviews first draft of paper with members of WG and PSRSC.
9. November/December. WG Chairman prepares number of drafts required to satisfy need of WG.

YEAR 3:

10. January. WG Chairman sends final draft to PSRSC Chairman for approval.
11. February. WG Chairman prepares final manuscript and transmits for publication in I&CPS Conference record.
12. May/June (I&CPS Conference) WG Chairman presents results of survey at Conference.

Prepared by:



Philip E. Gannon, Chairman



Copyright © 1998 IEEE. All rights reserved.

# Appendix G
# Report of Transformer Reliability Survey— Industrial Plants and Commercial Buildings

By
J. W. Aquilino
*IEEE Transactions on Industry Applications*
Sep./Oct. 1983, pp. 858-866

Copyright © 1998 IEEE. All rights reserved.

This page is intentionally blank

# Report of Transformer Reliability Survey—Industrial Plants and Commercial Buildings

JAMES W. AQUILINO, MEMBER, IEEE

*Abstract*—**The Power Systems Reliability Subcommittee of the IEEE Industry Applications Society has been conducting surveys of the reliability of electrical equipment in industrial and commercial power systems. A previous survey published in 1973 and 1974 [1] included data on the reliability of transformers. Some of the questions raised by the previous results, together with a general need for updated data, prompted a new survey which was conducted in 1979. The results of that survey are presented in this paper.**

## INTRODUCTION

ACCURATE reliability data on transformers, together with similar data on other types of electrical equipment, are necessary for evaluating power system reliability. Information of this type is often the only means of showing economic justification for spares, redundancy, or improved maintenance programs. The purpose of this 1979 transformer reliability survey of industrial plants and commercial buildings was to improve upon the results of the previous survey published in 1973-1974 [1] by answering some of the questions raised and eliminating some of the controversy created. The major reasons for conducting the new survey were outlined in a paper presented at the 1979 Industrial and Commercial Power Systems Technical Conference [2].

The most controversial items in the previous survey concerned the average outage duration time after a transformer failure in relation to the failure restoration method. Another item which raised questions was the comparatively high failure rate for rectifier transformers. The 1979 survey form was condensed considerably from the 1973-1974 version. Most of the items found to be of little significance in the past have been omitted. The remaining survey items are aimed at factors believed to have the most influence on the important transformer reliability and availability parameters.

Another major consideration in preparing the new survey form was simplicity. This was intended to enable the respondent to reply with minimal effort, thereby assuring maximum possible response. Obviously, the condensation could only be carried to a certain extent before the survey results would become so general that they would be of little practical value.

Results of the 1979 transformer survey are presented in this paper in tabular form. The discussion which follows under *Survey Results* attempts to expand upon some of the more significant survey data obtained. In any survey of this type there will undoubtedly be some new questions raised and also some old questions and controversies left unresolved. We feel, however, that this data will be of considerable value to system planners, designers, and users.

Paper IPSD 80-7, approved by the Power Systems Technologies Committee of the IEEE Industry Applications Society for presentation at the 1980 Industrial and Commercial Power Systems Conference, Houston, TX, May 12-15. Manuscript released for publication February 2, 1981.

The author was with Northrop Corporation, 100 Morse Street, Norwood, MA 02062. He is now with General Radio (GenRad), 170 Tracer Lane, Waltham, MA 02154.

## SURVEY FORM

The form used for the 1979 survey is shown in the Appendix. As mentioned before, the Total Population form was condensed to include data relating specifically to transformer reliability. Important influencing factors were rating, voltage, age, and maintenance. However, reporting the response to maintenance quality is difficult. The 1973-1974 survey asked the respondent to give his or her opinion of the maintenance quality as excellent, fair, poor, or none. It is very difficult to be completely objective in responding to this type of question. The new survey, therefore, asked for a brief description of the extent of maintenance performed, the idea being to enable the reader to judge for himself the benefits derived from a particular maintenance procedure. The failed unit data requested is basically the same as that in the previous survey. The most important categories here are the causes of failure, the restoration method, restoration urgency, duration of failure, and age at time of failure.

## SURVEY RESPONSE

The response to the survey is summarized in Tables I and II. Responses were received from 25 different companies, and in many cases several locations within the companies were reported. Various types of industrial and commercial facilities are represented including chemical and petro-chemical plants, steel mills, paper mills, manufacturing plants, and hospitals, to name a few. Similar data from the 1973-1974 survey are shown in Table III for comparative purposes. A summarized comparison between the two survey results appears in Table IV. Direct comparisons cannot be made in some instances because of changes made in the sub-classes. For example, the new survey broke the ratings down into two groups, units 300-10 000 kVA and those greater than 10 000 kVA. The ratings in the previous survey were 300-750 kVA, 751-2 499 kVA, and 2 500 kVA and up.

One of the reasons for conducting this new survey was the need for reliability data on arc-furnace transformers. Unfortunately, the response to this category was very poor. The sample size reported was too small to obtain reliable results, therefore, the arc-furnace data were omitted. Hopefully, the response will improve in subsequent surveys. The response to the latest survey did improve over the 1973-

Copyright © 1998 IEEE. All rights reserved.

TABLE I
POWER TRANSFORMERS 1979 SURVEY

| Type | Number of Units | Unit-Years | Number of Failures | Failure Rate Failures/ Unit-Year | Average Repair Time (Hours) | Average Replacement Time (Hours) |
|---|---|---|---|---|---|---|
| All liquid filled | 1814 | 17 996 | 111 | 0.0062 | 356.1<br>N: 60 $F^2$ | 85.1<br>N: 39 $F^2$ |
| Liquid 300–10 000 kVA | 1750 | 17 410 | 102 | 0.0059 | 297.4<br>N: 56 $F^2$ | 79.3<br>N: 37 $F^2$ |
| Liquid >10 000 kVA | 64 | 586 | 9 | 0.0153 | 1178.5[1]<br>N: 4 $F^2$ | 192[1]<br>N: 2 $F^2$ |
| Dry 300–10 000 | 159 | 1700 | 11 | 0.0006[1] | 6[1]<br>N: 1 $F^2$ | –<br>N: 0 $F^2$ |

[1] Small sample size–less than eight failures.
[2] $F$ is failures.

TABLE II
RECTIFIER TRANSFORMERS 1979 SURVEY

| Type | Number of Units | Unit-Years | Number of Failures | Failure Rate Failures/ Unit-Year | Average Repair Time (Hours) | Average Replacement Time (Hours) |
|---|---|---|---|---|---|---|
| All liquid filled | 85 | 841 | 16 | 0.0190 | 2316<br>N: 8 $F^2$ | 41.4<br>N: 8 $F^2$ |
| Liquid 300–10 000 kVA | 61 | 644 | 10 | 0.0153 | 1664[1]<br>N: 3 $F^2$ | 38.7[1]<br>N: 7 $F^2$ |
| Liquid >10 000 kVA | 24 | 197 | 6[1] | 0.0303[1] | 2707.2[1]<br>N: 5 $F^2$ | 60[1]<br>N: 1 $F^2$ |

[1] Small sample size–less than eight failures.
[2] $F$ is failures.

TABLE III
ALL TRANSFORMERS[1]

| Number of Plants in Sample | Sample Size Unit-Years | Number of Failures Reported | Industry | | Failure Rate-Failures per Unit-Year | Industry Average | Actual Hours Downtime/Failure Minimum Plant Average | Median Plant Average | Maximum Plant Average |
|---|---|---|---|---|---|---|---|---|---|
| 33 | 15,210 | 63 | All..... | Liquid Filled - All..... | 0.0041 | $29.0 | 2.0 | 219. | 3744. |
| 30 | 13,210 | 39 | " ..... | 601-15,000 volts-All Sizes.... | 0.0030 | 174. | 2.0 | 49. | 840. |
| 12 | 3,002 | 11 | " ..... | 300-750 kVA..... | 0.0037 | 61.6 | 4.5 | 10.7 | 336. |
| 18 | 6,040 | 15 | " ..... | 751-2,499 kVA..... | 0.0025 | 217. | 2.0 | 64.0 | 840. |
| 11 | 4,036 | 13 | " ..... | 2,500 kVA & up..... | 0.0032 | 216. | 24.0 | 60.0 | 403. |
| 12 | 1,848 | 24 | " ..... | Above 15,000 volts..... | 0.0130 | 1076. | 12.8 | 1260. | 3744. |
| 16 | 4,937 | 18 | " ..... | Dry Type; 0-15,000 volts..... | 0.0036 | 153. | 0.5 | 28. | 720. |
| 3 | 672 | 20 | " ..... | Rectifier; Above 600 volts..... | 0.0298 | 380. | 24.0 | 80. | 867. |
| 14 | 8,598 | 43 | Chemical..... | Liquid Filled - All..... | 0.0050 | 338. | 8.0 | 168. | 1800. |
| 12 | 6,838 | 24 | " ..... | 601-15,000 volts-All Sizes.... | 0.0035 | 52.3 | 8.0 | 48.5 | 336. |
| 7 | 3,274 | 10 | " ..... | 300-750 kVA..... | 0.0031 | 19.3 | 3.0 | 8.0 | 120. |
| 9 | 1,601 | 19 | " ..... | Above 15,000 volts..... | 0.0119 | 670. | 12.8 | 708. | 3600. |
| 2 | 662 | 16 | " ..... | Rectifier; Above 600 volts..... | 0.0242 | 425. | 80.0 | 474. | 867. |
| 1 | 2,512 | 14 | Petroleum.... | Liquid Filled - All..... | 0.0056 | 843. | 4.8 | 591. | 1178. |
| 3 | 2,334 | 10 | " ..... | 601-15,000 volts-All Sizes.... | 0.0043 | 244. | 4.5 | 204. | 403. |

[1] From IEEE Survey published in 1973–1974 [1].


Copyright © 1998 IEEE. All rights reserved.

TABLE IV
ALL TRANSFORMERS[1]

| | Sample Size Unit-Years | Number of Failures | Type | Failure Rate Failures/ Unit-Year | Average Hours Downtime/ Failure |
|---|---|---|---|---|---|
| | | | Power- | | |
| 1979 | 17996 | 111 | Liquid Filled | 0.0062 | 249.3 |
| Survey | 1700 | 1[2] | Power-Dry | 0.0006[2] | 6 |
| | 841 | 16 | Rectifier | 0.0190 | 1178.7 |
| | 15210 | 63 | Liquid Filled | 0.0041 | 529 |
| 1973/74 | 4937 | 18 | Dry | 0.0036 | 153 |
| Survey | 672 | 20 | Rectifier | 0.0298 | 380 |

[1] Comparison of 1979 and 1973-1974 surveys.
[2] Small sample size-less than eight failures.

TABLE V
FAILURE RATE VERSUS AGE

| | | Power Transformers | | | |
|---|---|---|---|---|---|
| Type | Age[1] (Yrs) | Number of Units | Sample Size Unit-Years | Number of Failures[2] | Failure Rate Failures/ Unit-Year |
| Liquid | | | | | |
| 300-10 000 kVA | 1-10 | 638 | 2625.5 | 19 | 0.0072 |
| 300-10 000 kVA | 11-25 | 715 | 8846.5 | 47 | 0.0053 |
| 300-10 000 kVA | >25 | 397 | 5938.0 | 36 | 0.0060 |
| Liquid | | | | | |
| >10 000 kVA | 1-10 | 27 | 144.0 | 0[3] | |
| >10 000 kVA | 11-25 | 28 | 283.5 | 7[3] | 0.0246[3] |
| >10 000 kVA | >25 | 9 | 158.0 | 2[3] | 0.0126[3] |

[1] Age is the age at end of reporting period.
[2] Relay or tap changer faults were not considered in calculations for failure rates or repair and replacement times.
[3] Small sample size-less than eight failures.

1974 survey as seen by comparing the total number of unit-years for both the power and rectifier transformers. Not too surprisingly, the largest sample size reported occurred among the power transformers 300-10 000 kVA which totaled 17410 unit-years.

## SURVEY RESULTS

In Table IV it is clear that the results from the largest category, liquid filled power transformers, compared favorably between the 1973-1974 and 1979 surveys. This table also confirms the high failure rates for rectifier transformers. Before a further discussion on the results of the survey, in general, it would be worthwhile to note how the data compared with the controversial items in the previous survey.

The total number of hours (130 h) to replace a failed transformer with a spare appeared in Table 48 of the results of the 1973-1974 survey, under units 601-15 000 volts requiring a round-the-clock all out effort, and was felt by many to be too high. Units that were repaired showed an average outage time of 342 h. The new survey shows a considerable variation among power transformers depending upon size. The higher voltage units, reported in Table 49 of the results published in the 1973-1974 survey, showed an average repair time of 1842 h. This difference could be due to several factors, such as the transportation and handling problems associated with the larger units and the greater likelihood of having spares for the smaller units on hand at the site.

The results of the new survey confirmed the long replacement time after a transformer failure. The much longer times needed to repair a failed transformer than to replace it with a spare were also confirmed. The new survey also confirmed the fact that the failure rates for rectifier transformers are much higher than those for the other transformer categories. This may be due to severe duties or the environments to which they are subjected.

## AGE

Table V contains data broken down into three age groups. The failure rates for power transformers 300-10 000 kVA were approximately equal in all three age groups. The slightly higher failure rates for the units aged 1-10 years, and greater than 25 years, can probably be attributed to the infant mortality rate and units approaching end of life, respectively.

## RESTORATION METHOD

Tables I and II also include data on restoration times versus restoration method. The data clearly indicate that the restoration of a unit to service by repair rather than replacement results in a much longer outage duration in all cases. This compares favorably with the previous survey which showed

Copyright © 1998 IEEE. All rights reserved.

TABLE VI
FAILURE INITIATING CAUSE

| All Power Transformers | No. of Failures[1] | Percentage |
|---|---|---|
| Transient overvoltage disturbance (switching surges, arcing ground fault, etc...) | 18 | 16.4 |
| Overheating | 3 | 2.7 |
| Winding insulation breakdown | 32 | 29.1 |
| Insulating bushing breakdown | 15 | 13.6 |
| Other insulation breakdown | 6 | 5.4 |
| Mechanical breaking, cracking, loosening, abrading or deforming of static or structural parts | 8 | 7.3 |
| Mechanical burnout, friction or seizing of moving parts. | 3 | 2.7 |
| Mechanically caused damage from foreign source (digging, vehicular accident, etc.) | 3 | 2.7 |
| Shorting by tools or other metal objects | 1 | 0.9 |
| Shorting by birds, snakes, rodents, etc. | 3 | 2.7 |
| Malfunction of protective relay control device or auxiliary device | 5 | 4.5 |
| Improper operating procedure | 4 | 3.6 |
| Loose connection or termination | 8 | 7.3 |
| Others | 1 | 0.9 |
| Continuous overvoltage | 0 | 0 |
| Low voltage | 0 | 0 |
| Low frequency | 0 | 0 |
| | 110 | |

[1] Failure initiating cause not specified for two failures.

TABLE VII
FAILURE CONTRIBUTING CAUSE

| All Power Transformers | No. of Failures[1] | Percentage |
|---|---|---|
| Persistent overloading | 1 | 1.1 |
| Abnormal temperature | 5 | 5.5 |
| Exposure to aggressive chemicals, solvents, dusts, moisture or other contaminants | 13 | 14.4 |
| Normal deterioration from age | 12 | 13.3 |
| Severe wind, rain, snow, sleet or other weather conditions | 4 | 4.4 |
| Lack of protective device | 2 | 2.2 |
| Malfunction of protective device | 7 | 7.8 |
| Loss, deficiency, contamination, or degradation of oil or other cooling medium | 9 | 10.0 |
| Improper operating procedure or testing error | 3 | 3.3 |
| Inadequate maintenance | 7 | 7.8 |
| Others | 27 | 30.0 |
| Exposure to non-electrical fire or burning | 0 | 0 |
| Obstruction of ventilation by foreign object or material | 0 | 0 |
| Improper setting of protective device | 0 | 0 |
| Inadequate protective device | 0 | 0 |
| | 90 | |

[1] Failure contributing cause not specified for 22 failures.

repair times considerably longer than replacement times. Despite this fact, in most cases, a larger number of units was restored to service by repair. Results such as these show the obvious benefits in having spares at the site or readily available. The data may also help system planners and users determine the economic feasibility of purchasing spares. In computing the average repair and replacement times, those instances in which the repair or replacement was deferred were excluded to avoid distorting the averages. The averages shown represent only those cases where restoration was begun immediately.

## FAILURE CAUSE

Tables VI-XI summarize the causes which initiate and contribute to the failure and the suspected failure responsibility for both power and rectifier transformers. Tables VI and IX show large percentages of failures initiated by some type of insulation breakdown or transient overvoltages. Table IX, however, shows a surprisingly large percentage of rectifier transformer failures initiated by mechanical causes.

Tables VII and X, which show the failure contributing causes, compare well with the 1973-1974 survey results. Normal deterioration from age contributed to a large number of both power and rectifier transformer failures. As in the past, Table VIII shows that respondents believed that manufacturer defects and inadequate maintenance were responsible for the greatest numbers of failures of power transformers. Table XI shows inadequate operating procedure was also a significant cause of failures of rectifier transformers.

## MAINTENANCE CYCLE AND EXTENT OF MAINTENANCE

The large percentage of failures which resulted from inadequate maintenance shows the importance of accurate

TABLE VIII
SUSPECTED FAILURE RESPONSIBILITY

| All Power Transformers | Number of Failures[1] | Percentage |
|---|---|---|
| Manufacturer defective component or improper assembly | 32 | 33.3 |
| Transportation to site, improper handling | 1 | 1 |
| Application engineering, improper application | 3 | 3.1 |
| Inadequate installation and testing prior to start-up | 6 | 6.3 |
| Inadequate maintenance | 25 | 26.0 |
| Inadequate operating procedures | 4 | 4.2 |
| Outside agency–personnel | 3 | 3.1 |
| Outside agency–others | 6 | 6.3 |
| Others | 16 | 16.7 |
| | 96 | |

[1] Suspected failure responsibility not specified for 16 failures.

data on the extent and frequency of the maintenance performed. The latest survey attempted to obtain this data in a simple form. The response did not lend itself to reporting in tabular form. Maintenance information continues to be the most difficult to obtain in useful form, not only for transformers, but for all other equipment that have been surveyed as well. Hopefully in the future, we will be able to devise a method of obtaining this data and reporting it in a manner that will enable system users to establish effective preventive maintenance programs.

## TYPE OF FAILURE

The 1979 survey limited the choices of failure type to "winding" and "other" (Tables XII and XIII). About half of the failures occurred on transformer windings.



Copyright © 1998 IEEE. All rights reserved.

TABLE IX
FAILURE INITIATING CAUSE

| All Rectifier Transformers | Number of Failures[1] | Percentage |
|---|---|---|
| Transient overvoltage disturbance (lightning, switching surges, arcing ground fault, etc.). | 2 | 13.3 |
| Overheating | 1 | 6.6 |
| Winding insulation breakdown | 2 | 13.3 |
| Insulation bushing breakdown | 1 | 6.6 |
| Other insulation breakdown | 3 | 20 |
| Mechanical breaking, cracking, loosening, abrading or deforming of static or structural parts | 3 | 20 |
| Mechanical burnout, friction or seizing of moving parts | 2 | 13.3 |
| Loose connection or termination | 1 | 6.6 |
| Continuous overvoltage | 0 | 0 |
| Mechanically caused damage from foreign source (digging, vehicular accident, etc.) | 0 | 0 |
| Shorting by tools or other metal objects | 0 | 0 |
| Shorting by birds, snakes, rodents, etc. | 0 | 0 |
| Malfunction of protective relay control device or auxiliary device | 0 | 0 |
| Low voltage | 0 | 0 |
| Low frequency | 0 | 0 |
| Improper operating procedure | 0 | 0 |
| Other | 0 | 0 |
| | 15 | |

[1] Failure initiating cause not specified for 1 failure.

TABLE X
FAILURE CONTRIBUTING CAUSE

| All Rectifier Transformers | No. of Failures[1] | Percentage |
|---|---|---|
| Abnormal temperature | 1 | 7.1 |
| Exposure to aggressive chemicals, solvents dusts, moisture or other contaminants | 1 | 7.1 |
| Normal deterioration from age | 4 | 28.6 |
| Inadequate protective device | 1 | 7.1 |
| Loss, deficiency, contamination or degradation of oil or other cooling medium | 3 | 21.4 |
| Inadequate maintenance | 3 | 21.4 |
| Others | 1 | 7.1 |
| Persistant overloading | 0 | 0 |
| Exposure to non-electrical fire or burning | 0 | 0 |
| Obstruction of ventilation by foreign object or material | 0 | 0 |
| Severe wind, rain, snow, sleet or other weather conditions | 0 | 0 |
| Improper setting of protective device | 0 | 0 |
| Lack of protective device | 0 | 0 |
| Malfunction of protective device | 0 | 0 |
| Improper operating procedure or testing error | 0 | 0 |
| | 14 | |

[1] Failure contributing cause not specified for two failures.

## FAILURE CHARACTERISTIC

As would be expected, Tables XIV and XV show that about 3/4 of transformer failures resulted in removal from service by automatic protective devices, however, the percentage requiring manual removal was significant. Increasing use of transformer oil or gas analysis could be a factor here. This would enable detection of incipient faults in their early stages, allowing manual removal before a large scale failure occurs.

TABLE XI
SUSPECTED FAILURE RESPONSIBILITY

| All Rectifier Transformers | Number of Failures | Percentage |
|---|---|---|
| Manufacturer–defective component or improper assembly | 5 | 31.2 |
| Application engineering–improper application | 2 | 12.5 |
| Inadequate maintenance | 2 | 12.5 |
| Inadequate operating procedures | 5 | 31.2 |
| Others | 2 | 12.5 |
| Transportation to site–improper handling | 0 | 0 |
| Inadequate installation and testing prior to startup | 0 | 0 |
| Outside agency–personnel | 0 | 0 |
| Outside agency–others | 0 | 0 |
| | 16 | |

TABLE XII
TYPE OF FAILURE

| Type of Failure | Power Transformers Number of Failures | Percentage |
|---|---|---|
| Winding | 59 | 53 |
| Others | 53 | 47 |

TABLE XIII
TYPE OF FAILURE

| Type of Failure | Rectifier Transformers Number of Failures | Percentage |
|---|---|---|
| Winding | 8 | 50 |
| Others | 8 | 50 |

TABLE XIV
FAILURE CHARACTERISTICS

| Failure Characteristic | Power Transformers Number of Failures | Percentage |
|---|---|---|
| Automatic removal by protective device | 83 | 75 |
| Partial failure reducing capacity | 5 | 5 |
| Manual removal | 23 | 20 |

TABLE XV
FAILURE CHARACTERISTIC

| Failure Characteristic | Rectifier Transformers Number of Failures | Percentage |
|---|---|---|
| Automatic removal by protective device | 11 | 69 |
| Partial failure reducing capacity | 0 | 0 |
| Manual removal | 5 | 31 |

## VOLTAGE

Table XVI shows the failure rate for liquid filled power transformers broken down by voltage rating. From Table XVI it is evident that the failure rates for 600-15 000 volt transformers are less than those for the higher voltage units in both

Copyright © 1998 IEEE. All rights reserved.

TABLE XVI
FAILURE RATE VERSUS VOLTAGE

| Power Transformers | | | | | |
|---|---|---|---|---|---|
| Type | Voltage (kV) | Number of Units | Sample Size Unit-Years | Number of Failures | Failure Rate Failures/Unit-Year |
| Liquid 300–10 000 kVA | .6–15 | 1626 | 15775 | 82 | 0.0052 |
| Liquid 300–10 000 kVA | >15 | 124 | 1637 | 18 | 0.0110 |
| Liquid >10 000 kVA | >15 | 52 | 490 | 9 | 0.0184 |

TABLE XVII
FAILURE RATE VERSUS VOLTAGE

| Rectifier Transformers | | | | | |
|---|---|---|---|---|---|
| Type | Voltage (kV) | Number of Units | Sample Size Unit-Years | Number of Failures | Failure Rate Failures/Unit-Year |
| All Liquid | .6–15 | 65 | 745 | 15 | 0.0201 |

size categories. The small sample sizes in several categories in Table XVII make it impossible to draw any definite conclusions on the effect of voltage on the failure rates of rectifier transformers.

## CONCLUSION

The purpose of this survey was to update the results of the 1973–1974 survey and to clarify some of the issues raised by those results. In general, the data obtained in the latest survey confirm the previous results.

Only that data from which meaningful results could be obtained were included in this report. Obviously more information was requested in the survey than discussed in the previous sections. The remaining data were eliminated either because the sample sizes were too small, because analysis showed it to have little or no influence on transformer reliability, or because it could not be reported in a meaningful way.

## APPENDIX

December 15, 1978

Subject: *Reliability Survey for Power, Rectifier, and Arc-Furnace Transformers*

Dear Sir:

The Power System Reliability Subcommittee of the Industrial and Commercial Power Systems Committee requests your cooperation in a survey to determine the reliability of power, rectifier, and arc-furnace transformers in industrial plants. This survey is part of a program to update the information obtained in our 1971 general reliability survey of plant equipment and to provide additional information on rectifier and arc-furnace transformers.

The results of this survey will be published in an IEEE paper. The information obtained is expected to be of value to system planners, designers, and users in the reliability evaluation of various alternatives. Individual responses will be held in confidence and only summaries published.

### SURVEY INSTRUCTIONS

Definitions, brief instructions, and sample survey forms (Figs. 1-2) are provided for guidance. We wish to emphasize that all requested data is important, but it is also realized that some of the information requested may be unknown. In such cases, simply provide the information that is known, and leave the other spaces blank. If additional survey forms are needed, please duplicate the forms provided.

*Definitions*

*1) Failure*: A failure is any trouble with a power system component that causes any of the following to occur:

a) partial or complete shutdown, or below standard plant operation,

b) unacceptable performance of user's equipment,

c) operation of the electrical protective relaying or emergency operation of the plant electrical system,

d) de-energization of any electric circuit or equipment.

*2) Failure Duration:* Duration of a failure or repair time of a failed component is the clock hours from the time of the occurrence of the failure to the time when the component is restored to service, either by repair of the component or by substitution with a spare component. It includes time for diagnosing the trouble, locating the failed component, waiting for parts, repairing or replacing, and restoring the component to service. *It is not the time required to restore service to a load by putting alternate circuits into operation.*



Copyright © 1998 IEEE. All rights reserved.

Company Name and Plant: _____

Location: _____

Industry Type: _____

Period Reported: From: Month _____ Year _____

To: Month _____ Year _____

TOTAL POPULATION: (List each transformer by number on a separate line.)

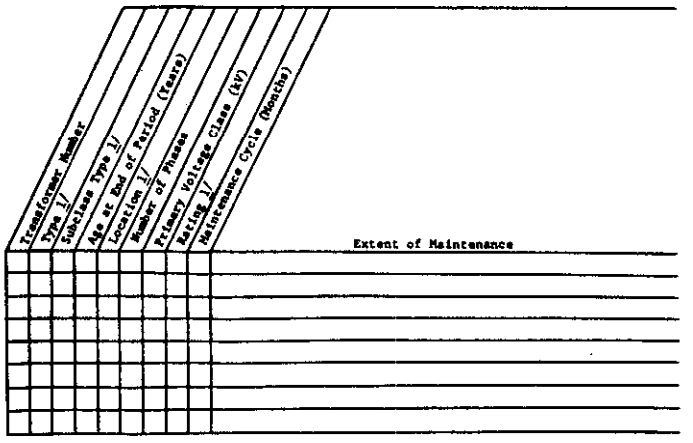


1/ Use code from attached sheets.

Fig. 1. Reliability survey for power, rectifier, and arc-furnace transformers.

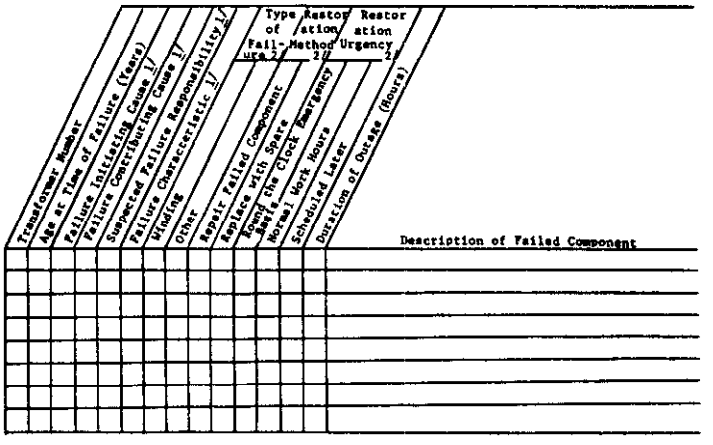


1/ Use code from attached sheets.
2/ Check applicable box.

Fig. 2. Failed Unit Data: Use transformer number from total population form.

Copyright © 1998 IEEE. All rights reserved.

*General Data*

1) It is vitally important that the period being reported be given.
2) Indicate the general type of industry involved at the plant being reported, such as auto, cement, chemical, metalworking, petroleum, pulp and paper, textile, etc.

*Total Population Data*

1) Using the Total Population data block, give the requested data for *all power, rectifier, and arc-furnace transformers in service during the period reported whether or not failures have been experienced.* Data should be reported on only those transformers used on a continuous basis. Transformers which are de-energized for substantial periods of time should not be included.
2) The age is the number of years from the time of installation to the end of the period reported under General Data.
3) Give a brief description of the extent of maintenance.

*Failed Unit Data*

1) List each failure separately.
2) Transformer Number for each failure is the Transformer Number used on the Total Population form.
3) Specify the age of the transformer at the time of failure.
4) Specify the failure initiating cause, contributing cause, and suspected failure responsibility using the code numbers on the attached sheets.
5) Check the restoration urgency.
6) Specify the time in hours from the onset of the failure until the transformer was restored to service.
7) Describe briefly the component that failed, including the component material.

Your participation in this survey will be greatly appreciated.

Sincerely,

J. W. Aquilino
*Working Group Chairman*

CODE NUMBERS TO BE USED WITH TOTAL POPULATION FORM

*Transformer Type*

1) Power
2) Rectifier
3) Arc-Furnace

*Subclass Type*

1) Liquid
2) Dry

*Location*

1) Indoor
2) Outdoor

*Rating*

1) 300-10 000 kVA
2) >10 000 kVA

CODE NUMBERS TO BE USED WITH FAILED UNIT DATA FORM

*Failure Initiating Cause*

1) Transient overvoltage disturbance (lightning, switching surges, arcing ground fault, etc.).
2) Continuous overvoltage.
3) Overheating.
4) Winding insulation breakdown.
5) Insulating bushing breakdown.
6) Other insulation breakdown.
7) Mechanical breaking, cracking, loosening, abrading, or deforming of static or structural parts.
8) Mechanical burnout, friction, or seizing of moving parts.
9) Mechanically caused damage from foreign source (digging, vehicular accident, etc.).
10) Shorting by tools or other metal objects.
11) Shorting by birds, snakes, rodents, etc.
12) Malfunction of protective relay control device or auxiliary device.
13) Low voltage.
14) Low frequency.
15) Improper operating procedure.
16) Loose connection or termination.
17) Others.

*Failure Contributing Cause*

1) Persistent overloading.
2) Abnormal temperature.
3) Exposure to aggressive chemicals, solvents, dusts, moisture, or other contaminants.
4) Exposure to nonelectrical fire or burning.
5) Obstruction of ventilation by foreign object or material.
6) Normal deterioration from age.
7) Severe wind, rain, snow, sleet, or other weather conditions.
8) Improper setting of protective device.
9) Lack of protective device.
10) Inadequate protective device.
11) Malfunction of protective device.
12) Loss, deficiency, contamination, or degradation of oil or other cooling medium.
13) Improper operating procedure or testing error.
14) Inadequate maintenance.
15) Others.

*Suspected Failure Responsibility*

1) Manufacturer-defective component or improper assembly.


Copyright © 1998 IEEE. All rights reserved.

2) Transportation to site-improper handling.
3) Application engineering-improper application.
4) Inadequate installation and testing prior to startup.
5) Inadequate maintenance.
6) Inadequate operating procedures.
7) Outside agency-personnel.
8) Outside agency-others.
9) Others.

*Failure Characteristic*

1) Automatic removal by protective device.
2) Partial failure reducing capacity.
3) Manual removal.

## REFERENCES

[1] "Report on reliability survey of industrial plants," *IEEE Trans. Ind. Appl.*, Mar./Apr., July/Aug., and Sept./Oct., (Parts I–VI), 1974.

[2] "Reasons for conducting a new reliability survey on power, rectifier and arc-furnace transformers," in the *Ind. Comm. Power Syst. Tech. Conf.*, May 1979, pp. 70–75.

**James W. Aquilino** (M'76) was born in Arlington, MA, in 1949. He received the B.S.E.E. degree from Northeastern University, Boston, MA, in 1972.

After a brief period working in the field of special electronic instrumentation, he joined the Factory Mutual Engineering Association as a Loss Prevention Engineer specializing in electrical equipment and electric utility generating plants. He later joined the electrical section of the Factory Mutual Research Corporation, Boiler and Machinery Standards Department, where his duties included the preparation of standards for the protection and maintenance of electrical equipment. While employed at Factory Mutual, he represented the company as a member of the National Fire Protection Association on NFPA No. 75, Electronic Data Processing, on NEC Code Panels Nos. 11 and 23, and as an alternate on Panel No. 4. He then joined GenRad, Inc., in Concord, MA, as a Senior Facilities Engineer in the Corporate Plant Engineering Department where his responsibilities included plant electrical engineering, utilities monitoring, energy conservation, and preventive maintenance, among others. He was employed as a Plant Engineer at Northrop Corporation's Precision Products Division in Norwood, MA. He has since returned to GenRad.

Mr. Aquilino is a member of the IEEE Industry Applications Society Industrial Power Systems Department, Power Systems Support Committee, and the Power System Reliability Subcommittee. He served as the Chairman of the Working Group on Transformer Reliability. He is a Registered Professional Engineer in the State of Massachusetts.

Copyright © 1998 IEEE. All rights reserved.

This page is intentionally blank

## Appendix H
## Report of Large Motor Reliability Survey of Industrial and Commercial Installations
## Parts I, II, and III

By
P. O'Donnell

*IEEE Transactions on Industry Applications*
Parts I & II, Jul./Aug. 1985, pp. 853-872; Part III, Jan./Feb. 1987, pp. 153-158

Motor Reliability Working Group
Power Systems Reliability Subcommittee
Power Systems Engineering Committee
Industrial and Commercial Power Systems Department
IEEE Industry Applications Society

Copyright © 1998 IEEE. All rights reserved.

This page is intentionally blank

# Report of Large Motor Reliability Survey of Industrial and Commercial Installations, Part I

MOTOR RELIABILITY WORKING GROUP
POWER SYSTEMS RELIABILITY SUBCOMMITTEE
POWER SYSTEMS ENGINEERING COMMITTEE
INDUSTRIAL AND COMMERCIAL POWER SYSTEMS DEPARTMENT
IEEE INDUSTRY APPLICATIONS SOCIETY

*Abstract*—**The Power Systems Reliability Subcommittee of the IEEE Industry Applications Society recently initiated a survey of the reliability of large motors in industrial and commercial installations in keeping with its commitment to support or update results of the survey published in 1973 and 1974. Moreover, the new survey has emphasized and expanded on one type of electrical equipment only. The previous survey results were heavily biased by one class of motors in the motor category and contained some results that appeared unreasonable and were considered questionable. The results of this new survey are presented here and intended to expand failure data to additional influencing categories and at the same time be oriented to the more common types in use today. A restriction to a lower limit in size also distinguishes the results to motors in relatively critical applications. A further explanation of the reasons for this survey and intended results is presented in a subcommittee report included for reference in the Appendix.**

## INTRODUCTION

THE RESULTS of the 1982 survey on the reliability of motors in industrial and commercial installations are summarized in Tables I–XIX. The data obtained allowed the various categories to be shown here which provide failure data on a more expanded and detailed basis, for the most part, than was presented in the 1973/1974 survey results. Also comparisons are made with the previous survey where results are of similar format.

To focus on motors that are of a critical nature, where reliability is most important, this survey differs from the other in that only motors larger than 200 hp are considered. In addition, to present data on motors most commonly manufactured and used today and to avoid distorted failure data from old motors that are expected to have high failure rates, this survey has limited the age of motors to no more than 15 years.

A brief discussion is included for each table identifying significant points and results of the survey. The intent of this working group report is to present these results as updated experience in industry applications, and the drawing of definite conclusions is left to the reader.

Paper IPSD 83-12, approved by the Power Systems Technologies Committee of the IEEE Industry Applications Society for presentation at the 1984 Industrial and Commercial Power Systems Conference, Atlanta, GA, May 7–10, 1984. Manuscript released for publication May 7, 1984.

*Members of IEEE Motor Reliability Working Group*

R. N. Bell is with E.I. du Pont de Nemours & Company, Engineering Department, Louviers Building, L5231, Wilmington, DE, 19898.

D. W. McWilliams was with the Gates Rubber Company, 999 South Broadway, Denver, CO 80217. He is now deceased.

P. O'Donnell, *Coordinating Author,* is with El Paso Natural Gas Company, Tex & Stanton Box 1492, El Paso, TX 79978.

C. Singh is with Texas A&M University, Department of Electrical Engineering, College Station, TX 77843.

S. J. Wells is with Union Carbide Corporation, P.O. Box 50, Hahnville, LA 70057.

## SURVEY RESPONSE

The cover letter and questionaire form used in the survey are included in the Appendix. The form is specifically oriented to motors greater than 200 hp in size and no older than 15 years. As in other surveys succeeding the 1973 overall survey, this form is simplified into two sections: total population data and failure data.

Although the response was inadequate to identify a substantial number of industry types, the number of companies and plants identified was encouraging and the overall response was considered a success. Total population is less in this survey than in the 1973 survey, but this was anticipated due to the restriction on age and size. However, the total number of plants in the new survey is greater which adds credibility to the data as being representative of industry applications. The following list summarizes the magnitude of the response:

| | |
|---|---|
| number of plants | 75 |
| number of companies | 33 |
| number of motors | 1141 |
| total population (unit years) | 5085.0 |
| total failures | 360. |

Some respondents did not submit data for every category evidenced by the comment "not specified" in the tables. Where response was insufficient to identify the motor and/or period reported the response was not used. As in previous survey reports, this report maintains the standard for credibility of failure rates by identifying categories that contain an insufficient number of failures to be representative.

## SURVEY RESULTS

### *Summary*

Table I summarizes the results in types of motors and voltage classes in similar fashion to the previous survey summary table. The previous data have been rearranged for comparison and presented here as Table II. In the new survey there was not enough response to separate the petroleum industry and chemical industry or to separate out other industry types and still show meaningful results.

Copyright © 1998 IEEE. All rights reserved.

TABLE I
OVERALL SUMMARY—LARGE MOTORS

| Number of Plants in Sample Size | Sample Size (Unit Yr) | Number of Failures Reported | Industry | Equipment Subclass | Failure Rate (Failures/ Unit Yr) | Average Hours Downtime/ Failure | Median Hours Downtime/ Failure |
|---|---|---|---|---|---|---|---|
| 75 | 5085.0 | 360 | all | all | 0.0708 | 69.3 | 16.0 |
| | | | | induction | | | |
| 33 | 1080.3 | 89 | all | 0–1000 V | 0.0824 | 42.5 | 12.0 |
| 52 | 2844.4 | 203 | all | 1001–5000 V | 0.0714 | 75.1 | 12.0 |
| 5 | 78.1 | 2* | all | 5001–15 000 V | * | * | * |
| 1 | 13.5 | — | all | not specified | — | — | — — |
| | | | | synchronous | | | |
| 19 | 459.3 | 35 | all | 1001–5000 V | 0.0762 | 78.9 | 16.0 |
| 2 | 29.5 | 3* | all | 5001–15 000 V | * | * | * |
| | | | | wound rotor | | | |
| 5 | 137.0 | 10 | all | 0–1000 V | 0.0730 | * | * |
| 9 | 251.1 | 8 | all | 1001–5000 V | 0.0319 | * | * |
| 2 | 39.0 | 4* | all | 5001–15 000 V | * | * | * |
| | | | | direct current | | | |
| 5 | 122.7 | 6* | all | 0–1000 V | * | * | * |
| 1 | 30.0 | — | — | 1001–5000 V | — | — | — |
| | | | | induction | | | |
| 11 | 484.3 | 39 | petrochemical | 0–1000 V | 0.0805 | 88.3 | 40.0 |
| 28 | 1349.0 | 108 | petrochemical | 1001–5000 V | 0.0801 | 109.4 | 48.0 |
| 2 | 10.3 | 1* | petrochemical | 5001–15 000 V | * | — | — |
| | | | | synchronous | | | |
| 7 | 73.0 | 8 | petrochemical | 1001–5000 V | 0.1096 | 72 | 16.0 |
| | | | | wound rotor | | | |
| 2 | 20.8 | 4* | petrochemical | 0–1000 V | * | — | — |
| 3 | 17.6 | 3* | petrochemical | 1001–5000 V | * | — | — |

* Small sample size.

TABLE II
1973 OVERALL SUMMARY—MOTORS

| Number of Plants in Sample Size | Sample Size (Unit Yr) | Number of Failures Reported | Industry | Equipment Subclass | Failure Rate (Failures/ Unit Yr) | Average Hours Downtime/ Failure | Median Hours Downtime/ Failure |
|---|---|---|---|---|---|---|---|
| — | 42 463 | 561 | all | all | 0.0132 | 111.6 | — |
| | | | | induction | | | |
| 17 | 19 610 | 213 | all | 0–600 V | 0.0109 | 114.0 | 18.3 |
| 17 | 4229 | 171 | all | 601–15 000 V | 0.0404 | 76.0 | 91.5 |
| | | | | synchronous | | | |
| 2 | 13 790 | 10 | all | 0–600 V | 0.0007 | 35.3 | 35.3 |
| 11 | 4276 | 136 | all | 601–15 000 | 0.0318 | 175.0 | 153.0 |
| 6 | 558 | 31 | all | direct current | 0.0556 | 37.5 | 16.2 |
| | | | | induction | | | |
| 9 | 16 105 | 196 | petrochemical | 0–600 V | 0.0122 | 123.4 | — |
| 10 | 3834 | 156 | petrochemical | 601–15 000 V | 0.0407 | 74.3 | — |
| | | | | synchronous | | | |
| 1 | 13 750 | 10 | petrochemical | 0–600 V | 0.0007 | 35.3 | 35.3 |
| 6 | 4027 | 130 | petrochemical | 601–15 000 V | 0.0323 | 175.8 | — |


Copyright © 1998 IEEE. All rights reserved.

Response was adequate in this survey to show an intermediate voltage class (1001–5000 V) not shown in the previous survey. Induction motors in the first two voltage classes show failures rates very nearly the same, with the lower voltage class slightly higher. Both are substantially higher than the earlier results (Table II).

The response for synchronous motors was dominated by the 1001–5000-V class, and again the new survey shows a failure rate twice that of the higher voltage rated synchronous motors in Table II. The new results show failure rates for synchronous and induction motors approximately equal for the same voltage class. The "petrochemical" industry shows a slightly higher failure rate for synchronous motors than for all industries.

The new survey obtained data on wound rotor induction motors with results showing a failure rate only slightly less than induction motors of the same lower voltage class. The next higher voltage class has a failure rate less than half that of synchronous and induction motors.

Although the sample size for dc motors was considered inadequate, this failure rate was the only one showing some consistency with the previous survey. The previous survey did not show a voltage class for dc motors.

Overall, the median hours downtime per failure was reported as less in the new survey than in the 1973 survey. Again the downtime reported was biased with unusually high periods and the average value for each class is consistently higher than the median value. The overall average and median downtime values calculated for all categories in this table include the downtime data omitted in the specific categories with "small sample size." Also, downtime for two failures was exceptionally and unusually high and therefore omitted from the results. One was reported as 960 h for an induction motor in the 0–1000-V class and replaced with a spare to restore service. The other was reported as 6570 h for an induction motor in the 1001–5000-V class and repaired during normal working hours.

*Horsepower*

Table III is presented to show a relationship of failure rate with size. The response gives a good comparison between the first two size categories with the failure rates calculating very nearly the same and also approximating those in Table I showing voltage classes. The third size category (5001–10 000 hp) shows a relatively high failure rate but calculated with a small population in sample size.

*Speed*

Failure rate is generally considered affected by speed, but Table IV shows somewhat unexpected results. The highest speed range, essentially 3600 r/min was included in this survey because of the increasing popularity in industry of two-pole motors. These results show the highest speed motors as most reliable and the lowest speed as least reliable.

*Enclosure Type*

This population type was added to expand on any notable effects on failure rate. Table V shows that open motors

TABLE III
HORSEPOWER VERSUS FAILURE RATE

| | 201–500 hp | 501–5000 hp | 5001–10 000 hp | >10 000 hp | Not Specified |
|---|---|---|---|---|---|
| Sample size (unit-yr) | 3185.6 | 1822.5 | 46.1 | 17.2 | 13.5 |
| Number of failures | 217 | 133 | 10 | — | — |
| Failure rate (failures/unit-yr) | 0.0681 | 0.0730 | 0.2169 | — | — |

TABLE IV
SPEED VERSUS FAILURE RATE

| | 0–720 r/min | 721–1800 r/min | 1801–3600 r/min | Not Specified |
|---|---|---|---|---|
| Sample size (unit yr) | 657.1 | 3219.8 | 1194.6 | 13.5 |
| Number of failures | 66 | 232 | 62 | — |
| Failure rate (failures/unit yr) | 0.1004 | 0.0721 | 0.0519 | — |

experienced the highest failure rate among those with substantial sample size. Depending on the application this result might have been expected except the table below on causes does not support this result in the obvious causes of moisture and aggressive chemicals. It is suspected that more supporting data may be hidden in the relatively high response to causes reported as "other."

*Environment*

In Table VI the survey results show failure rate as affected by indoor and outdoor applications. It was expected that outdoor motors would show a higher failure rate than indoor motors, but the opposite was true. This follows from Table V which shows open type enclosures with the highest failure rate. One might conclude that when all environmentally related causes are combined as one, they support the results of Tables V and VI.

*Duty Application*

This population type breaks out continuous and intermittent application in Table VII. The total sample size was heavily dominated by continuous duty use with this category showing the highest failure rate at about twice that of intermittent duty. Some motors were reported as intermittent in a backup or standby role and operated only a small fraction of the period reported which may account partly for the large difference in failure rates.

*Service Factor*

Reliability versus service factor (SF) is an important consideration for those who must apply motors at varying load conditions that sometime exceed the normal nameplate rating of the motors. Table VIII shows a higher failure for 1.15-SF

Copyright © 1998 IEEE. All rights reserved.

TABLE V
ENCLOSURE TYPE VERSUS FAILURE RATE

| | Open | Weather Protected | Totally Enclosed (TEFC, E.P., D.I.P) | Totally Enclosed (Open Pipe Vent) | Totally Enclosed (Water-Air) | Totally Enclosed (Air-Air) | Not Specified |
|---|---|---|---|---|---|---|---|
| Sample size (unit yr) | 2597.6 | 569.5 | 1339.9 | 40.7 | 119.5 | 332.5 | 85.2 |
| Number of failures | 224 | 25 | 78 | 6* | 6* | 20 | 1* |
| Failure rate (failures/unit yr) | 0.0862 | 0.0439 | 0.0582 | * | * | 0.0602 | * |

*Small sample size.

TABLE VI
ENVIRONMENT VERSUS FAILURE RATE

| | Indoor | Outdoor | Not Specified |
|---|---|---|---|
| Sample size (unit yr) | 3359.9 | 1663.8 | 61.3 |
| Number of failures | 263 | 97 | — |
| Failure rate (failures/unit yr) | 0.0783 | 0.0583 | — |

TABLE VII
DUTY APPLICATION VERSUS FAILURE RATE

| | Continuous | Intermittent | Not Specified |
|---|---|---|---|
| Sample size (unit yr) | 4412.2 | 659.3 | 13.5 |
| Number of failures | 334 | 26 | — |
| Failure rate (failures/unit yr) | 0.0757 | 0.0394 | — |

TABLE VIII
SERVICE FACTOR VERSUS FAILURE RATE

| | 1.0SF | 1.15SF | >1.15SF | Not Specified |
|---|---|---|---|---|
| Sample size (unit yr) | 2557.9 | 2314.9 | 102.3 | 109.9 |
| Number of failures | 158 | 187 | 4* | 11 |
| Failure rate (failures/unit yr) | 0.0618 | 0.0808 | 0.0391 | 0.1001 |

*Small sample size.

motors than for 1.0-SF motors. Under causes, overheating was reported as a significant failure initiator which raises the suspicion that exceeding temperature rises might be an application problem. These results do not show the effect of full service factor operation on field equipment of synchronous and dc motors or on secondary equipment of wound rotor motors. However, slip rings and brushes were not reported as obvious major problem areas as shown in Table XI.

TABLE IX
AVERAGE NUMBER OF STARTS/DAY VERSUS FAILURE RATE

| | <1 | 1-10 | 11-30 | >30 | Not Specified |
|---|---|---|---|---|---|
| Sample size (unit yr) | 3654.8 | 1274.5 | 104.9 | 37.3 | 13.5 |
| Number of failures | 257 | 97 | 2* | 4* | — |
| Failure rate (failure/unit yr) | 0.0703 | 0.0761 | 0.0191 | 0.1072 | — |

*Small sample size.

TABLE X
POWER SUPPLY GROUNDING TYPE VERSUS FAILURE RATE

| | Solid Ground | Impedence Ground | Ungrounded | Not Specified |
|---|---|---|---|---|
| Sample size (unit yr) | 2287.7 | 1873.9 | 909.9 | 13.5 |
| Number of failures | 127 | 150 | 83 | — |
| Failure rate (failures/unit yr) | 0.0555 | 0.0800 | 0.0912 | — |

### *Average Number of Starts per Day*

This population type was expected to provide data to show the effects of increasing severity in duty cycle, as related to starting, on failure rate. Surprisingly, the results (Table IX) show only a slight difference in failure rate between the first two categories. The response was disappointing in the last two categories, and no obvious trend in evident.

### *Power Supply Grounding Type*

Much has been written about the effects of how the power supply system neutral is handled on reliability of electrical equipment and especially on motors. Table X shows results that support many generalizations and expected consequences of grounding types. The least failure rate is with solidly grounded power supplies, and the highest is with ungrounded power supplies. Commonly expected causes of failures in ungrounded systems include transient overvoltage and abnormal voltage levels, but the table on causes did not support this.


Copyright © 1998 IEEE. All rights reserved.

TABLE XI
FAILED COMPONENT

| Failed Component[a] | Number of Failures: Induction Motors | Synchronous Motors | Wound Rotor Motors | DC Motors | Total All Types |
|---|---|---|---|---|---|
| Bearing | 152 | 2 | 10 | 2 | 166 |
| Windings | 75 | 16 | 6 | — | 97 |
| Rotor | 8 | 1 | 4 | — | 13 |
| Shaft or CPLG | 19 | — | — | — | 19 |
| Brushes or slip ring | — | 6 | 8 | 2 | 16 |
| External device | 10 | 7 | 1 | — | 18 |
| Not specified | 40 | 9 | — | 2 | 51 |

[a] Some respondents reported more than one failed component per motor failure.

However, insulation breakdown and deterioration from age might be interpreted as being affected by ungrounded systems.

*Failed Component*

Table XI shows which components failed most often for the four types of motors surveyed. Similar to the previous survey, bearings and windings were the predominate trouble areas. However, in this survey bearings by far led all other individual components in failures. In the previous survey windings failed most often. A significant number of failures occurred where the failed component was not specified in this survey.

*Time Failure Discovered*

The data in Table XII give an indication of when users discover most failures. Two-thirds of the failures were discovered during normal operation, and almost one third were discovered during testing or maintenance. Many feel that under a good maintenance program, most failures are discovered or prevented during testing or maintenance. Table XIV shows that about one-third of the total population reported excellent maintenance. The previous survey showed the same trend in when failures were discovered. The causes table lists major types that support the result of most failures being discovered during normal operation.

*Causes of Failures*

These results, shown in Table XIII are very close to those of the 1973 survey with some minor differences. The three most common failure initiators are mechanical breakage, overheating, and insulation breakdown. These causes, combined, are supportive of the previous survey results.

The major contributing cause reported is normal deterioration from age, as was also a major contributer in the other survey. Unlike the previous survey, high vibration and poor lubrication were also reported as significant causes which reinforce the problem areas of mechanical breakage and consequently bearing failures. Both surveys reported defective components and inadequate maintenance as major underlying causes.

Considering the combined contributing causes related to environmental conditions such as high ambient temperature, abnormal moisture, aggressive chemicals, and poor ventilation, the failure rates of open and indoor motors shown in

TABLE XII
TIME FAILURE DISCOVERED

| | Number of Failures | Percent of Total |
|---|---|---|
| During normal operation | 240 | 66.7 |
| During routine maintenance or testing | 101 | 28 |
| Other | 13 | 3.6 |
| Not specified | 6 | 1.7 |

TABLE XIII
CAUSES OF FAILURES

| | Number of Failures | Percent |
|---|---|---|
| Failure Initiator | | |
| 1) Transient overvoltage | 5 | 1.5 |
| 2) Overheating | 45 | 13.2 |
| 3) Other insulation breakdown | 42 | 12.3 |
| 4) Mechanical breakage | 113 | 33.1 |
| 5) Electrical fault or malfunction | 26 | 7.6 |
| 6) Stalled motor | 3 | 0.9 |
| 7) Other | 107 | 31.4 |
| Failure Contributor | | |
| 1) Persistent overloading | 14 | 4.2 |
| 2) High ambient temperature | 10 | 3.0 |
| 3) Abnormal moisture | 19 | 5.8 |
| 4) Abnormal voltage | 5 | 1.5 |
| 5) Abnormal frequency | 2 | 0.6 |
| 6) High vibration | 51 | 15.5 |
| 7) Agressive chemicals | 14 | 4.2 |
| 8) Poor lubrication | 50 | 15.2 |
| 9) Poor ventilation or cooling | 13 | 3.9 |
| 10) Normal deterioration from age | 87 | 26.4 |
| 11) Other | 65 | 19.7 |
| Failure Underlying Cause | | |
| 1) Defective component | 62 | 20.1 |
| 2) Poor installation/testing | 40 | 12.9 |
| 3) Inadequate maintenance | 66 | 21.4 |
| 4) Improper operation | 11 | 3.6 |
| 5) Improper handling/shipping | 2 | 0.6 |
| 6) Inadequate physical protection | 19 | 6.1 |
| 7) Inadequate electrical protection | 18 | 5.8 |
| 8) Personnel error | 21 | 6.8 |
| 9) Outside agency other than personnel | 12 | 3.9 |
| 10) Motor-driven equipment mismatch | 15 | 4.9 |
| 11) Other | 43 | 13.9 |

Copyright © 1998 IEEE. All rights reserved.

TABLE XIV
MAINTENANCE VERSUS FAILURE RATE

| Maintenance Quality and Cycle | Sample Size (Unit Yr) | Number of Failures | Failure Rate (Failures/Unit Yr) | Median Hours Downtime/Failure | Average Hours Downtime/Failure |
|---|---|---|---|---|---|
| Excellent | | | | | |
| <12 mo | 834.0 | 93 | 0.1115 | 8 | 53.6 |
| 12–24 mo | 660.1 | 24 | 0.0364 | 24 | 40 |
| >24 mo | 285.5 | 9 | 0.0315 | 36 | 48 |
| All | 1779.6 | 126 | 0.0708 | 16 | 50.9 |
| Fair[a] | | | | | |
| <12 mo | 1776.8 | 155 | 0.0872 | 16 | 37.7 |
| 12–24 mo | 967.7 | 39 | 0.0403 | 54 | 166.3 |
| >24 mo | 167.0 | 12 | 0.0719 | 165 | 264.4 |
| Not Specified | 4.0 | 1* | * | * | * |
| All | 2915.5 | 207 | 0.0710 | 16 | 87.3 |
| Poor[b] | | | | | |
| <12 mo | 37.1 | 3* | * | * | * |
| 12–24 mo | 195.4 | 15 | 0.0563 | 96 | 83.6 |
| >24 mo | 6.0 | 1* | * | * | * |
| All | 238.5 | 19 | 0.0797 | 72 | 70.7 |
| None | 123.3 | 7* | * | * | * |
| Not specified | 28.0 | 1* | * | * | * |

*Small sample size.
[a] 960 h downtime for one failure omitted.
[b] 6570 h downtime for one failure omitted.

Tables V and VI may not be abnormal. Additionally, this survey shows improper application as a significant problem area when the combined effects of poor installation/testing, physical and electrical protection, personnel error, and equipment mismatch are considered.

### *Maintenance Versus Failure Rate*

Table XIV shows the results of failure rate compared to maintenance quality and maintenance cycle as reported in this survey. The previous survey results did not report maintenance cycle versus failure rate. However, Table XV has arranged available data to show quality versus failure rate. One notable difference can be seen in the maintenance cycle response in each quality category. The previous survey showed a trend in more frequent maintenance associated with higher quality. In the new survey response was greatest in the most frequent maintenance cycle in both the excellent and fair quality categories. So an obvious trend is not evident.

In both surveys, the largest response was to fair maintenance. However, the new survey had much more response to poor maintenance. Both had about the same division in response between fair and excellence qualities.

The most surprising result in the new data is the failure rate under reported excellent maintenance. Excellent maintenance with the most frequent cycle had the highest failure rate. Overall, in each quality category there is very little difference in failure rate.

The downtime listed in Table XIV does show an expected trend between the categories. The data suggest that the higher the quality and more frequent the cycle, the less severe the failure.

### *Description of Maintenance*

Response was adequate to present a description of the methods of maintenance reported under the categories of quality and cycle. In Table XVI data are listed as percentages of the number of types of motor population reported (e.g., one plant reported six different types of motors with maintenance data listed for each type; these were counted as six population types for the purposes of this table). The differences and similarities between the various categories are quite obvious. The most commonly used method of maintenance under excellent and fair is "clean."

TABLE XV
1973 MAINTENANCE QUALITY VERSUS FAILURE RATE

| Maintenance Quality and Cycle | Sample Size (Unit Yr) | Number of Failures | Failure Rate (Failures/Unit Yr) |
|---|---|---|---|
| Excellent | | | |
| <12 mo | 14 650 | | |
| 12–24 mo | 1372 | | |
| >24 mo | 1259 | | |
| All | 17 281 | 77 | 0.0045 |
| Fair | | | |
| <12 mo | 121 | | |
| 12–24 mo | 21 930 | | |
| >24 mo | 2958 | | |
| All | 25 009 | 439 | 0.0175 |
| Poor | | | |
| <12 mo | — | | |
| 12–24 mo | — | | |
| >24 mo | 74 | | |
| All | 74 | 2* | 0.0270* |

*Small sample size.

### *Failure Repair/Replace Urgency*

Table XVII is intended to give some insight to the urgency reported for restoring motors to service and the resulting downtime of the failures. In these data the following two responses were considered unusual and exceptional and were omitted: downtime for one failure under "repair during normal working hours" was reported as 6570 h and downtime



Copyright © 1998 IEEE. All rights reserved.

TABLE XVI
DESCRIPTION OF MAINTENANCE REPORTED

| Maintenance Description | Percent of Population Types: Excellent <12 mo | Excellent 12–24 mo | Excellent >24 mo | Excellent All | Fair <12 mo | Fair 12–24 mo | Fair >24 mo | Fair All | Poor <12 mo | Poor 12–24 mo | Poor >24 mo | Poor All |
|---|---|---|---|---|---|---|---|---|---|---|---|---|
| 1) Visual | 12.5 | 2.3 | — | 6.5 | 24.7 | 43.1 | 41.7 | 32.6 | — | 31.2 | — | 33.3 |
| 2) Meggar | 39.6 | 47.7 | 25.0 | 40.7 | 53.5 | 50.8 | 33.3 | 51.1 | — | 12.5 | — | 23.8 |
| 3) Clean | 43.7 | 56.8 | 25.0 | 46.3 | 91.1 | 38.5 | 83.3 | 71.4 | — | 37.5 | — | 33.3 |
| 4) Lub. and/or filters | 33.3 | 36.4 | 37.5 | 35.2 | 64.4 | 52.3 | 16.7 | 56.8 | — | 62.5 | — | 52.4 |
| 5) Vibration check | 20.8 | 2.3 | — | 10.2 | 29.7 | — | 16.7 | 18.0 | — | — | — | — |
| 6) Bearing check | 18.7 | 34.1 | 43.7 | 28.7 | 1.0 | 16.9 | 41.7 | 9.5 | — | 6.2 | — | 4.8 |
| 7) Reinsulate | 4.2 | — | 18.7 | 4.6 | — | 3.1 | 33.3 | 3.4 | — | 6.2 | — | 4.8 |
| 8) Ampere or temperature check | 4.2 | — | — | 1.9 | 3.0 | 13.8 | 8.3 | 7.3 | — | 12.5 | — | 9.5 |
| 9) Air gap check | 2.1 | 20.5 | — | 9.3 | 8.9 | — | — | 5.1 | — | — | — | — |
| 10) Alignment | 4.2 | 15.9 | — | 8.3 | — | — | — | — | — | — | — | — |
| 11) Change or check brushes | 6.2 | 4.5 | — | 4.6 | 8.9 | 1.5 | 8.3 | 6.2 | — | — | — | — |
| 12) Overhaul | — | — | — | — | — | — | 8.3 | — | — | — | — | — |
| 13) Paint | — | — | — | — | 5.9 | — | 33.3 | 5.6 | — | — | — | — |
| 14) Check cooling system | — | — | — | — | 3.0 | — | — | 1.7 | — | — | — | — |
| 15) Not specified | 22.9 | 22.7 | 37.5 | 25.0 | — | 3.1 | — | 1.1 | — | — | — | 4.8 |
| Number of Population Types | 48 | 44 | 16 | 108 | 101 | 65 | 12 | 178 | 4 | 16 | 1 | 21 |

TABLE XVII
REPAIR/REPLACE URGENCY VERSUS DOWNTIME

| | Number of Failures | Average Hours Downtime/Failure | Median Hours Downtime/Failure |
|---|---|---|---|
| Normal working hours[a] | 87 | 97.7 | 24.0 |
| Round the clock | 45 | 81.4 | 72.0 |
| Replace with spare[b] | 111 | 18.2 | 8.0 |
| Low priority | 4* | 370.0* | 400.0* |
| Not specified | 6* | 288.0* | 240.0* |
| Total | 251 | 69.3 | 16.0 |

*Small sample size.
[a] 6570 h for one failure omitted.
[b] 960 h for one failure omitted.

TABLE XVIII
1973 REPAIR/REPLACE URGENCY VERSUS DOWNTIME

| | Number of Failures | Average Hours Downtime/Failure |
|---|---|---|
| Normal working hours | 323 | 136.0 |
| Working round the clock | 54 | 110.3 |
| Replace with spare | 94 | 21.0 |
| Low priority | 7* | * |
| Total | 478 | 108.5 |

*Small sample size.

for one failure under "replace with spare" was reported as 960 h. Data from the previous survey were rearranged and presented here as Table XVIII. Unlike the previous survey, median hours downtime per failure is included in the new data to reflect the influence of numerous long downtime periods reported.

In the first two categories the new survey shows obvious shorter average downtime per failure than the older survey, but the category on replace-with-spare is very close. An obvious uncertainty in the new results is evident in the median value for round-the-clock urgency. The downtime is higher than for less urgent repair. This suggests the possibility of some data being reported erroneously. Another interesting result is that half of the failures were reported as "replaced with spare" in the new survey. Only about one fifth of those of the old survey were in this category. This might be expected since the new survey covered only larger more critical applications. The previous survey results presented no downtime data for the "low priority" category, and thus the total average in Table XVIII is calculated using only the data shown.

## GENERAL DISCUSSION

It is the general consensus of the subcommittee sponsoring this activity that the new motor reliability data of this survey, contingent on reporting accuracy of the respondents, is more practical and useful for its intended purpose than the older survey data because of the restrictions on age and size. This survey also produced an attractive cross section of experience in the number of plants represented. One very obvious difference in the findings in this survey over the 1973 survey is the general trend of higher failure rates in the new data.

For obvious reasons, maintenance is expected to have a significant impact on failure rate and downtime. This paper, for the most part, presents results of responses to the population types as requested in the survey questionnaire.

Copyright © 1998 IEEE. All rights reserved.

TABLE XIX
90 PERCENT CONFIDENCE INTERVALS FOR FAILURE RATE

| | Induction Motors | Synchronous Motors | Wound Rotor Motors | DC Motors | All |
|---|---|---|---|---|---|
| Lower limit | 0.0659 | 0.0583 | 0.0350 | 0.0169 | 0.0644 |
| Survey result | 0.0732 | 0.0777 | 0.0515 | 0.0393 | 0.0708 |
| Upper limit | 0.0798 | 0.1026 | 0.0737 | 0.0699 | 0.0772 |
| Percent deviation, L | 10 | 25 | 32 | 57 | 9 |
| Percent deviation, U | 9 | 32 | 43 | 78 | 9 |

There are many possible combinations of categories, especially including those related to maintenance, that can be formulated from the responses. The questions and uncertainties stimulated by the results presented here warrant continued analysis and an additional report is planned to present this expanded analysis of the correlation between the various categorical results with particular emphasis on the effects of maintenance.

As an additional tool, Table XIX provides a measure of confidence in the use of the new data in this report. The table illustrates the statistical limits within which 90 percent of the failures could be expected to occur. The confidence limits are based on curves assuming a homogeneous population since it would be impractical to search out every variable affecting confidence levels and determine curves for each one.

## APPENDIX

## REASONS FOR CONDUCTING A NEW RELIABILITY SURVEY ON MOTORS

*By:* Power Systems Reliability Subcommittee,
Industrial and Commercial Power Systems Committee,
IEEE Industry Applications Society
September 1981

| | |
|---|---|
| Charles R. Heising (*Chairman*) | Don W. McWilliams |
| James W. Aquilino | William T. Miles |
| Carl E. Becker | Joseph J. Moder |
| Richard N. Bell | John H. Moore |
| Thomas V. Booth | Pat O'Donnell |
| Williard H. Dickinson | A. D. Patton |
| Bruce Douglas | Chinan Singh |
| Phillip E. Gannon | Wayne L. Stebbins |
| Raymond E. Gibley | Howard P. Stickley |
| Ian Harley | Harold T. Wane |
| Thomas Key | Stanley J. Wells |

The IEEE "Report on Reliability Survey of Industrial Plants, Part I: Reliability of Electrical Equipment" published in 1973 contained information on failure rates and downtime/failure for motors.

In their meeting on May 12, 1980, in Houston, TX, and in keeping with their commitment to update the previous survey, the Power Systems Reliability Subcommittee of the IEEE Industrial Power Systems Department is conducting a new survey on the reliability of motors.

Overall the main purpose of this reliability survey is to identify failure data and the effects of preventive maintenance on important classes, types, and applications of motors, thus providing the designer and planner the valuable basic information needed to install a reliable and economic system.

The data in the previous reliability survey show that for motors rated 0–600 V the failure rate for induction motors is 15 times higher than synchronous motors. Since induction motors are normally considered more reliable than synchronous motors, it is presumed that the survey data were inadequate to cover enough applications to bring this out.

The data in the previous reliability survey shows that for induction motors 0–600 V (this category represents over 50 percent of the total motor population), the failure rate is 0.0109 (one unit failure per 92 unit years). This failure rate appears to be unreasonably low when compared with other equipment categories (i.e., motor starters = one failure per 72 unit years, steam turbine driven generators one failure per 32 unit years, transformers one failure per 244 unit years). Failure rate of this overall class of motors is obviously valuable information to users and manufacturers. This new survey will support or update this failure rate.

Motor designs, shop fabrication facilities, and manufacturing procedures for NEMA frame ac motors (ratings 1–200 hp) are significantly different from those for motors rated over 200 hp. In the previous motor reliability survey, the failure data for motors of all horsepower ratings were lumped together. The new motor reliability survey will collect failure data only on ac motors rated above 200 hp. Usually, motors rated above 200 hp are driving critical equipment. The reliability of these large motors is of prime importance to the industrial system design engineer. Recent user experience with reliability of the current generation of large ac motor designs (over 200 hp) indicates a trend toward a higher number of failures per unit time.

The previous survey data show that the industry average time to repair ac low-voltage motors (0–600 V) is 114 h compared to 76 h for medium-voltage ac motors (601–15 000 V). This information should be updated with a larger sample size of medium voltage motors.

The increased emphasis on minimizing capital investment in industrial facilities has resulted in a significant increase in the use of two-pole ac induction motors. Because of these relatively high speeds (3600 r/min), reliability of these two-pole motors is expected to be lower than the lower speed ac motors (four and six poles). The previous reliability study did not differentiate between 3600 r/min two-pole motors and the slower speed motors. The new motor reliability survey will collect separate reliability data on two-pole motors. Relative reliability data on two-pole motors and those with four or more poles will be useful to the industrial design engineer in evaluating the equipment cost savings inherent in two-pole (3600 r/min) operating speeds for motor and associated driven equipment.

The database for the previous reliability study (both unit years and number of units) represents something in the order of only a few hundredths of a percent of the total motor population.

The mailing list for the new survey will be expanded and edited to obtain failure data on a larger percentage of the total motor population.



Copyright © 1998 IEEE. All rights reserved.

COMPANY NAME AND PLANT:_____

INDUSTRY TYPE:_____

PERIOD REPORTED - FROM: MONTH_____ YEAR_____

TO: MONTH_____ YEAR_____

LOCATION:_____

CONTAMINATION LEVEL AND TYPE:_____

Fig. 1. Reliability survey for electric motors larger than 200 hp.

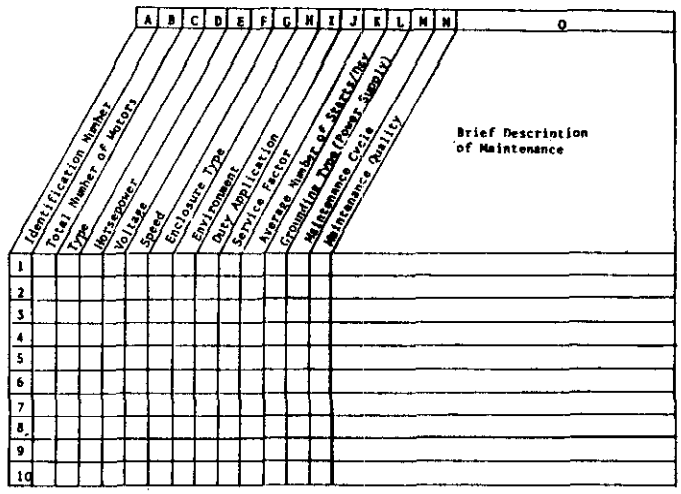


Fig. 2. Total population data.

COVER LETTER

Pat O'Donnell
El Paso Natural Gas Company
P.O. Box 1492
El Paso, TX 79978
(915) 541-2080

Dear Sir,

RE: Motor Reliability Survey for Motors Larger than 200 hp

The Reliability Subcommittee of the Industrial Power Systems Department requests your cooperation in a survey to determine the reliability of electric motors in industrial installations. As with previous surveys you may have seen, this survey is a followup to the general reliability survey of plant equipment in 1971 and is intended to provide more meaningful data on motors. Attached for your information is a report by the subcommittee on reasons for the survey.

The results of this survey will be published in an IEEE paper for value to system planners and designers in reliability evaluation of alternatives. Of course, individual responses will be held in strict confidence and only summaries published.

*Survey Instructions*

The survey form is reasonably self-explanatory, but a sample filled-out form is included for your guidance and some brief instructions follow. We emphasize that all requested data are important, but where some of these data are unknown, simply provide the known data and leave the other spaces blank. We also encourage any explanatory comments as you feel appropriate. If additional data sheets are needed, please duplicate those provided. *This survey is restricted to motors greater than 200 hp and no older than 15 years.*

*General Data [Fig. 1]:*

1) It is vitally important that the period reported be given.

2) Plant contamination level and type should be your best estimate.

*Total Population Data [Fig. 2]:*

1) Using the "total population" data block, give requested data for all motors greater than 200 hp and 15 years old or less, in service during the period reported *whether or not failures have occurred.* (Note: When the period reported exceeds the age of a motor, use separate data sheets for the new motors.)

2) Use the categories attached to the data block to describe the data.

3) When one data sheet is insufficient to list the total population of motors, use consecutive identification numbers in the first column of the data sheets (e.g., 1, 2, 3, etc., for first sheet; 11, 12, 13, etc., for the second sheet, and so on).

*Failure Data [Fig. 3]:*

1) List each motor failure event separately using the attached categories to describe the failure.

Copyright © 1998 IEEE. All rights reserved.

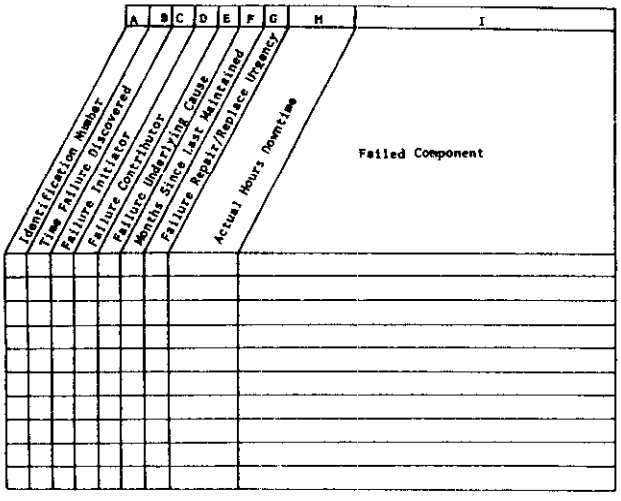


Fig. 3. Failure data.

2) Identify each failure with the corresponding identification number in the "total population" data.

3) Under column I describe the component on the motor that failed.

Our schedule dictates that responses be received no later than April 15, 1982. Your participation in this project will be greatly appreciated.

Sincerely,

Pat O'Donnell
Chairman, Motor Reliability Survey Working Group

REFERENCES

[1] IEEE Committee Report, "Report on reliability survey of industrial plants," *IEEE Trans. Ind. Appl.*, Mar./Apr., July/Aug., and Sept./Oct. 1974.

[2] *IEEE Recommended Practice for Design of Reliable Industrial and Commercial Power Systems*, IEEE Standard 493, pts. I, III, IV, and VI.

## Discussion

**P. F. Albrecht** (General Electric Company, Schenectady, NY), **E. L. Owen** (General Electric Company, Schenectady, NY), and **D. K. Sharma** (Electric Power Research Institute, Palo Alto, CA): This Working Group Report provides interesting and timely information which adds to a growing body of information about the reliability of electric motor drives. This information should be useful to owners, operators, and designers of motor equipments in their efforts to obtain improved motor reliability. The discussers welcome this additional information and support the objectives of the Working Group. We are hopeful that information of this type will become increasingly available as we feel it will assist all those involved in motor applications in obtaining increased reliability.

Surveys have been conducted by other groups seeking similar data for their industries. Under the sponsorship of the Electric Power Research Institute (EPRI), Palo Alto, CA, General Electric conducted an Industry Assessment Study (IAS) to evaluate the present reliability of powerhouse motors and to identify design and operational characteristics which, through advanced development, offer the potential of increased motor reliability [3]. Further work is presently underway to add data received after the closing date originally scheduled for the EPRI study. Analysis based on this additional data will be published at a later date.

We have compared the scope and results of this survey, as presented by the Working Group, with the results reported for the EPRI survey. Although the motor populations in the two studies are from different industries, we find many aspects of this Working Group Report which corroborates the findings of the EPRI study. The survey response achieved in the two studies are compared in Table XX.

In the EPRI study, it was found that failures subsequent to the first failure had a much different distribution than time to first failure. Therefore, the primary analysis was conducted in terms of time to first failure. Thus the failure rate from the EPRI study is not directly comparable with the Working Group results.

An important result of the EPRI study was to identify those motor components which are most subject to failure. This information was considered in setting priorities for development work to improve motor reliability. The type of motor involved in the EPRI survey was largely the squirrel-cage induction motor (approximately 97 percent of the "known" types were reported as cage induction motors), and the information about failure by component is most representative of this motor type. There are differences in the categories of


Copyright © 1998 IEEE. All rights reserved.

TABLE XX
SCOPE OF RELIABILITY STUDIES

| Parameter<br>Working Group — Nomenclature — (EPRI) | | Working Group | EPRI Phase I |
|---|---|---|---|
| Number of companies | (Utilities) | 33 | 56 |
| Number of plants | (Units) | 75 | 132 |
| Number of motors | (Motors) | 1141 | 4797 |
| Total population (unit-years) | (Motor-years) | 5085 | 24914* |
| Total failures | | 360 | 872 |
| Failure rate (all motors) | | 0.0708 | 0.035* |

*Based on first failure only.

failed component as reported in the two studies, which makes a direct comparison of results very difficult.

However, both studies found that for squirrel-cage induction motors, bearing and stator winding related failures accounted for approximately three-fourths of all failures, while rotor related failures accounted for only ten percent of the failures. These results seem to corroborate each other and gives us greater confidence in our conclusions as to where emphasis should be placed. Fig. 4 and Table XXI show the percentage failure by component as reported by the EPRI study.

As a part of the EPRI study, additional analysis was performed to understand reliability issues better. We found that the most significant variable affecting motor failure rate was the plant (unit) where the motor was installed. For example, in the EPRI study a 90 percent confidence interval for failure rate of each of the 132 units was calculated. If all units had the same underlying failure rate, about 13 units would have a 90 percent confidence interval which does not include the failure rate for the entire population. However, in the EPRI study, 40 units had a 90-percent interval entirely below the population average, and 22 units were entirely above the population average.

We felt it was important to consider this unit variation when investigating other factors such as application or size effects. Was any such effect between respondents investigated in the Working Group survey? In particular, could the effect of horsepower noted in Table III of your report be *partly* due to the different companies represented in various size ranges.

Table III of the Working Group report suggests a tendency for the motor failure rate to increase with motor size. Booz, *et al.* also made an analysis based on motor size [4]. However, it was felt that horsepower per pole, rather than horsepower, better represented exposure to such failure mechanisms as

- fatigue resulting from differential expansion,
- high stress during operation,
- susceptibility to lateral vibration.

Would it be possible to analyze the Working Group data on the basis of horsepower per pole, similar to the EPRI analysis?

As a final comment, the detail of analysis must be commensurate with the size of the database. With the large database in the EPRI Phase II study, we hope to be able to investigate such factors as the effect of first failure on subsequent failure rate. We again compliment the Working Group on a good survey and hope to see more of the same.

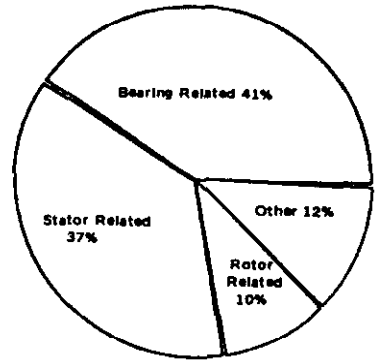


Fig. 4. Percentage failure by component.

TABLE XXI
PERCENTAGE FAILURE BY COMPONENT

| | |
|---|---|
| Bearing related | |
| Sleeve bearings | 16 |
| Antifriction bearings | 8 |
| Seals | 6 |
| Thrust bearing | 5 |
| Oil leakage | 3 |
| Other | 3 |
| Total | 41 |
| Stator related | |
| Ground insulation | 23 |
| Turn insulation | 4 |
| Bracing | 3 |
| Wedges | 1 |
| Frame | 1 |
| Core | 1 |
| Other | 4 |
| Total | 37 |
| Rotor related | |
| Cage | 5 |
| Shaft | 2 |
| Core | 1 |
| Other | 2 |
| Total | 10 |

## REFERENCES

[3] "Improved motors for utility applications," EPRI EL-2678, vol. 1, 1763-1, final rep., Oct. 1982.

[4] "Improved motors for utility applications, industry assessment study," EPRI EL-2678, vol. 2, 1763-1, final rep., Oct. 1982.

**Pat O'Donnell** (Coordinating Author): First, to address specific questions of the Discussion, we find the result of variation of reliability of motors in three different categories of units or groups very interesting and useful. However, the IEEE survey data do not lend themselves to this specific analysis. Our immediate response to this result is concern over the obvious cause or reason for this grouping to emerge. The IEEE data results attempted to classify industry types, which

Copyright © 1998 IEEE. All rights reserved.

may follow a similar purpose, but the results related to maintenance more specifically categorize users in the IEEE report. We believe the IEEE and EPRI surveys are distinctly different in this respect but, as such, are complementary.

The IEEE survey collected data on a range of horsepower sizes and a range of speed ratings. We are not able to identify a fine resolution of horsepower per pole ratios but only general ranges. A quick analysis of our data for induction motors only allows the result shown in Table XXII.

The IEEE survey emphasized motor size and speed range separately with the intent of comparing these categories mutually and with others. Again, these results seem to be an excellent complement to the EPRI results, which diminish the significance of motor size in horsepower and speed as separate considerations. That is, a small high-speed motor might have the same horsepower/pole ratio as a large slow-speed motor.

We also are enthused about the added confidence in our data showing similarities in failed component trends. Bearing and winding failure trends were very similar in the two survey results. The IEEE survey did not collect detailed data to break down failed components into more subcategories of types, but data were collected on causes which helped determine *why* bearing and winding failures occurred. We are very interested in whether or not the difference in reliability between the "high" and "low" groups in the EPRI results supports the causes found in our survey results.

Finally, there is a significant difference in the basis of the two surveys that add, possibly, to some of the differences in results. The IEEE survey acquired data only on motors larger than 200 hp. The EPRI survey included sizes down to and including 100 hp. This surely accounts for some of the difference in total populations, but additionally, the IEEE data exclude standard NEMA frame size motors. It would be of interest to compare our results with EPRI results excluding motors 200 hp and smaller. This working group is enthused about the EPRI results, and we look forward to seeing further analysis of the data.

TABLE XXII
HORSEPOWER VERSUS SPEED
(INDUCTION MOTORS)

| | Number of Failures | Unit Years | Failure Rate |
|---|---|---|---|
| 0–720 r/min | | | |
| 201–500 hp | 7 | 137.92 | 0.0508 |
| 501–5000 hp | 12 | 175.16 | 0.0685 |
| 5001–10 000 hp | — | — | — |
| >10 000 hp | — | — | — |
| 721–1800 r/min | | | |
| 201–500 hp | 148 | 1922.43 | 0.0770 |
| 501–5000 hp | 66 | 740.1 | 0.0892 |
| 5001–10 000 hp | 1 | 2.83 | 0.3534 |
| >10 000 hp | — | 7.5 | — |
| 3600 r/min | | | |
| 201–500 hp | 42 | 655.75 | 0.0640 |
| 501–5000 hp | 16 | 358.66 | 0.0446 |
| 5001–10 000 hp | — | — | — |
| >10 000 hp | — | — | — |

**Pat O'Donnell** (S'64–M'68–SM'80) was born in El Paso, TX, in 1942. He received the B.S.E.E. degree from Texas Western College (now University of Texas at El Paso) in 1965.

After brief employment with Schlumberger Well Surveying Corporation, he joined El Paso Natural Gas Company in 1966 and is presently Principal Electrical Engineer in the main office Engineering Department in El Paso.

Mr. O'Donnell is currently active in the Industrial and Commercial Power Systems Department of the IEEE Industry Applications Society and currently serves as Secretary of the department. He is a member of and past Chairman of the Power System Technologies Committee and current Chairman of the Emergency and Standby Power Systems Subcommittee. He is also a member of the Power Systems Reliability Subcommittee, serving as Chairman of the Motor Reliability Working Group, and the Power Systems Analysis Subcommittee. Outside of IEEE, he is a member of the ASME Standards Committee on Ignition Systems for Industrial Engines. He is a Registered Professional Engineer in the States of Texas and New Mexico.



Copyright © 1998 IEEE. All rights reserved.

# Report of Large Motor Reliability Survey of Industrial and Commercial Installations, Part II

MOTOR RELIABILITY WORKING GROUP
POWER SYSTEMS RELIABILITY SUBCOMMITTEE
POWER SYSTEMS ENGINEERING COMMITTEE
INDUSTRIAL AND COMMERCIAL POWER SYSTEMS DEPARTMENT
IEEE INDUSTRY APPLICATIONS SOCIETY

*Abstract*—**In 1983 the initial results of an IEEE survey on large motors was published and presented at the 1983 I&CPS Conference. This was the first presentation of the results of a survey completed in 1982 of motors larger than 200 hp and no older than 15 years. The results presented here of the 1982 survey are to investigate the data further to address questions generated by the results of the earlier paper, to find additional correlations of the reliability criteria of some of the more interesting categories, and to bring out more results and categories available from the survey data. For information on the overall survey response and the general results of the surveyed categories, refer to the previous paper.**

## INTRODUCTION

THE SECOND set of results of the 1982 survey of the reliability of large motors in industrial and commercial installations is summarized in Tables I-XIII. Reference is occasionally made to the results presented in 1983 which will hereafter be called Part 1 [1].

In addition to new comparisons of categories to reveal more detailed analysis of the results of Part 1, these new results focus more on the effects of maintenance and especially more on the effects of causes. Of particular interest are the comparisons of reliability data for induction and synchronous motors, further analysis of service factor and speed, further analysis of bearing and winding failures, a closer look at the effect of inadequate maintenance on reliability, additional comparisons of indoor and outdoor applications, and additional grounding type comparisons.

Some comments about the data in the tables are in order to clarify some questions that may arise. Where no data are given, there was either no response or the number of failures (FLR's) and population were insufficient for meaningful results. A footnote marks insufficient response where failures were reported, but the total was less than eight. This is in keeping with the standard of credibility previously established by the Power Systems Reliability Subcommittee. In preparation of this paper, a careful, closer look was taken and some of the minor errors in counting were corrected. Thus the total count in some areas will differ slightly from those of Part 1. However, the corrections are minor and no trends are affected. Also, as in the Part 1 results, downtime (DT) for two failures was omitted. One was 960 h for an induction motor, 0–1000 V and replaced-with-spare. The other was 6570 h for an induction motor, 1001–5000 V.

As with other survey results by this subcommittee, a brief discussion is included for each table emphasizing significant results, but there is no intent to draw definite conclusions. The tables are presented representing results from the data reported in the survey.

## INDUCTION AND SYNCHRONOUS MOTORS

The results in Part 1 of the survey showed induction and synchronous motors with nearly equal failure rates. Some believe that synchronous motors, because of their complexity, should fail more than induction motors. Table I compares these types to various categories to identify any notable differences.

Two categories showed some deviation from the general results of Part 1. Where response was adequate in the first two classes, starts per day clearly affected synchronous motors more than induction motors. The induction motor failure rate changed very little, but the synchronous motor failure rate increased with an increase in starts per day. In the speed category it was the induction motors that showed some deviation from the trend of Part 1. One observation is the increase in failure rate with speed for the first two classes of speed. A second observation is the high failure rate for synchronous motors in the slowest speed class. So the two types of motors had opposite trends in failure rate with speed. The influence of synchronous motors on the slowest speed class is clearly evident where this class showed the highest failure rate in Part 1. For induction motors, the lowest failure rate was again in the highest speed class. The effects of speed are also evaluated in comparisons to horsepower, causes, and failed component.

Paper IPSD 84-36, approved by the Power Systems Technologies Committee of the IEEE Industry Applications Society for presentation at the 1984 Industrial and Commercial Power Systems Conference, Atlanta, GA, May 7-10, 1984. Manuscript released for publication November 5, 1984.

*Members of IEEE Motor Reliability Working Group*

R. N. Bell is with E.I. du Pont de Nemours & Company, Engineering Department, Louviers Building, L5231, Wilmington, DE. 19898.

C. R. Heising is with Industrial Reliability Tech, 216 Farwood Road, Philadelphia, PA, 19151.

P. O'Donnell, *Coordinating Author*, is with El Paso Natural Gas Company, Tex & Stanton Box 1492, El Paso, TX 79978.

C. Singh is with Texas A&M University, Department of Electrical Engineering, College Station, TX 77843.

S. J. Wells is with Union Carbide Corporation, P.O. Box 50, Hahnville, LA 70057.

Copyright © 1998 IEEE. All rights reserved.

TABLE I

| | Starts/Day | | | | Duty Application | | Environment | | Speed (r/min) | | | Grounding Type | | |
|---|---|---|---|---|---|---|---|---|---|---|---|---|---|---|
| | 1 | 1–10 | 11–30 | >30 | Contin-uous | Inter-mittent | Indoor | Outdoor | 0–720 | 721–1800 | 3600 | Solid | Imped-ance | Un-grounded |
| **INDUCTION MOTORS** | | | | | | | | | | | | | | |
| Number of FLR's | 234 | 58 | — | — | 274 | 20 | 203 | 91 | 19 | 216 | 59 | 101 | 123 | 70 |
| Sample size (unit yr) | 3215.8 | 756.0 | 88.4* | 8.0* | 3480.3 | 587.8 | 2485.9 | 1582.3 | 313.1 | 2817.9 | 1037.2 | 1909.6 | 1492.0 | 666.6 |
| FLR rate (FLR's/unit yr) | 0.0728 | 0.0767 | — | — | 0.0787 | 0.0340 | 0.0817 | 0.0575 | 0.0607 | 0.0766 | 0.0569 | 0.0529 | 0.0824 | 0.1050 |
| Average hours DT/FLR | 61.1 | 83.8 | — | — | 57.9 | 194.0 | 51.1 | 96.8 | 191.2 | 54.5 | 48.1 | 69.2 | 58.0 | 71.5 |
| Median hours DT/FLR | 12.0 | 18.0 | — | — | 12.0 | 54.0 | 8.0 | 48.0 | 72.0 | 8.0 | 36.0 | 36.0 | 10.0 | 8.0 |
| Number of FLR's with no DT given | 84 | 13 | — | — | 90 | 7 | 72 | 48 | 0 | 86 | 11 | 37 | 58 | 2 |
| **SYNCHRONOUS MOTORS** | | | | | | | | | | | | | | |
| Number of failures | 13 | 23 | 2* | — | 36 | 2* | 38 | — | 27 | 10 | 1* | 12 | 24 | 2* |
| Sample size (unit yr) | 194.5 | 266.1 | 8.0 | — | 426.6 | 42.0 | 451.2 | 17.4* | 254.9 | 200.9 | 12.7 | 251.7 | 200.3 | 16.5 |
| FLR rate (FLR's/unit yr) | 0.0668 | 0.0864 | — | — | 0.0844 | — | 0.0842 | — | 0.1059 | 0.0498 | — | 0.0477 | 0.1198 | — |
| Average hours DT/FLR | 97.5 | 68.4 | — | — | 58.4 | — | 74.2 | — | 33.1 | 139.1 | — | 166.0 | 39.8 | — |
| Median hours DT/FLR | 24.0 | 16.0 | — | — | 16.0 | — | 16.0 | — | 16.0 | 96.0 | — | 60.0 | 16.0 | — |
| Number of FLR's with no DT given | 2 | 1 | — | — | 16 | — | 3 | — | 0 | 3 | — | 2 | 1 | — |

*Small sample size.

TABLE II
MOTOR TYPE VERSUS SERVICE FACTOR

| | Induction | | | Synchronous | | | Wound Rotor | | | Direct Current | | |
|---|---|---|---|---|---|---|---|---|---|---|---|---|
| | 1.0 | 1.15 | >1.15 | 1.0 | 1.15 | >1.15 | 1.0 | 1.15 | >1.15 | 1.0 | 1.15 | >1.15 |
| Number of FLR's | 127 | 165 | 2* | 25 | 10 | 3* | 10 | 12 | — | 6* | — | — |
| Sample size (unit yr) | 2062.7 | 1943.0 | 62.5 | 274.2 | 152.8 | 41.5 | 160.7 | 246.4 | — | 94.2 | 30.0* | 7.3* |
| FLR rate (FLR's/unit yr) | 0.0616 | 0.0849 | — | 0.0912 | 0.0654 | — | 0.0622 | 0.0487 | — | — | — | — |
| Average hours DT/FLR | 54.4 | 75.0 | — | 81.2 | 63.4 | — | 52.3 | 192.2 | — | — | — | — |
| Median hours DT/FLR | 8.0 | 24.0 | — | 16.0 | 20.0 | — | 24.0 | 162.0 | — | — | — | — |
| Number of FLR's with no DT given | 28 | 71 | — | 0 | 3 | — | 3 | 6 | — | — | — | — |

*Small sample size.

## SERVICE FACTOR

Another interesting result of this survey in Part 1 was that 1.15 service factor (SF) motors had a higher failure rate than 1.0-SF motors. Tables II–IV take a closer look at this category by comparison to other categories.

Table II compares service factor to the various types of motors surveyed. The results show that 1.15-SF induction motors failed more than 1.0-SF induction motors, but the opposite was true with synchronous and wound rotor induction motors. The lowest failure rate of all was in 1.15-SF wound rotor induction motors.

In Table III the service factor is evaluated in horsepower classes. Only the first two size classes had adequate response. As in the results of Part 1 failure rate increased with increase in service factor in the smallest size class. However, in the next larger size class the failure rate was approximately the same for 1.0 and 1.15 SF.

The next category broken out with service factor is voltage, shown in Table IV. The same trend evident in Part 1 is again evident here. The failure rate increased with increase in service factor for each voltage class where response was adequate. The service factor is evaluated further in Table VIII with comparisons to failed component and causes.

## SPEED

Part 1 of the survey results showed a decrease in failure rate with increase in speed rating for all categories. Most expect that failure rate with speed is most affected by motor size. Table V is presented to show these categories from this survey. The results show the same trend as Part 1 except for a slight deviation in the smallest motor class. The 721–1800



Copyright © 1998 IEEE. All rights reserved.

TABLE III
HORSEPOWER VERSUS SERVICE FACTOR

| | 201–500 hp | | | 501–5000 hp | | | 5001–10 000 hp | | | 10 000 hp | | |
|---|---|---|---|---|---|---|---|---|---|---|---|---|
| | 1.0 | 1.15 | >1.15 | 1.0 | 1.15 | >1.15 | 1.0 | 1.15 | >1.15 | 1.0 | 1.15 | >1.15 |
| Number of failures | 105 | 114 | — | 56 | 71 | 5* | 7* | 2* | — | — | — | — |
| Sample size (unit yr) | 1758.0 | 1405.9 | 34.1* | 777.4 | 961.4 | 77.2 | 39.2 | 4.8 | — | 17.2* | — | — |
| FLR rate (FLR's/unit yr) | 0.0597 | 0.0811 | — | 0.0720 | 0.0739 | — | — | — | — | — | — | — |
| Average hours DT/FLR | 47.7 | 48.6 | — | 86.8 | 126.5 | — | — | — | — | — | — | — |
| Median hours DT/FLR | 8.0 | 12.0 | — | 16.0 | 50.0 | — | — | — | — | — | — | — |
| Number of FLR's with no DT given | 21 | 50 | — | 11 | 29 | — | — | — | — | — | — | — |

*Small sample size.

TABLE IV
VOLTAGE VERSUS SERVICE FACTOR

| | 0–1000 V | | | 1001–5000 V | | | 5001–15 000 | | |
|---|---|---|---|---|---|---|---|---|---|
| | 1.0 | 1.15 | >1.15 | 1.0 | 1.15 | >1.15 | 1.0 | 1.15 | >1.15 |
| Number of FLR's | 54 | 46 | — | 107 | 139 | 5* | 8 | 1* | — |
| Sample size (unit yr) | 745.5 | 509.0 | 7.3* | 1725.4 | 1837.5 | 104.0 | 121 | 25.6 | — |
| FLR rate (FLR's/unit yr) | 0.0724 | 0.0904 | — | 0.0620 | 0.0756 | — | 0.0661 | — | — |
| Average hours DT/FLR | 38.8 | 88.3 | — | 75.3 | 75.9 | — | 22.7 | — | — |
| Median hours DT/FLR | 8.0 | 36.0 | — | 16.0 | 16.0 | — | 24.0 | — | — |
| Number of FLR's with no DT given | 6 | 18 | — | 24 | 61 | — | 2 | — | — |

*Small sample size.

TABLE V
HORSEPOWER VERSUS SPEED (r/min)

| | 201–500 hp | | | 501–5000 hp | | | 5001–10 000 hp | | | >10 000 hp | | |
|---|---|---|---|---|---|---|---|---|---|---|---|---|
| | 0–720 | 721–1800 | 3600 | 0–720 | 721–1800 | 3600 | 0–720 | 721–1800 | 3600 | 0–720 | 721–1800 | 3600 |
| Number of FLR's | 19 | 157 | 43 | 38 | 75 | 19 | 7* | 2* | — | — | — | — |
| Sample size (unit yr) | 277.3 | 2209.8 | 711.0 | 400.1 | 940.0 | 475.8 | 39.2 | 4.8 | — | 9.7* | 7.5* | — |
| FLR rate (FLR's/unit yr) | 0.0685 | 0.0710 | 0.0605 | 0.0950 | 0.0798 | 0.0399 | — | — | — | — | — | — |
| Average Hours DT/FLR | 156.2 | 35.7 | 39.9 | 99.4 | 109.2 | 116.1 | — | — | — | — | — | — |
| Median Hours DT/FLR | 70.0 | 8.0 | 36.0 | 16.0 | 24.0 | 52.0 | — | — | — | — | — | — |
| Number of FLR's with no DT given | 5 | 58 | 8 | 0 | 36 | 4 | — | — | — | — | — | — |

*Small sample size.

Copyright © 1998 IEEE. All rights reserved.

TABLE VI
ENCLOSURES—OUTDOOR

| | Open | Weather Protected | Totally Enclosed (TEFC, E.P., D.I.P.) | Totally Enclosed (Open Pipe Vent) | Totally Enclosed (Water-Air) | Totally Enclosed (Air-Air) |
|---|---|---|---|---|---|---|
| Number of FLR's | 18 | 17 | 49 | 2[a] | — | 11 |
| Sample size (unit yr) | 111.1 | 379.0 | 1014.7 | 16.0 | — | 131.7 |
| FLR rate (FLR's/unit yr) | 0.1620 | 0.0449 | 0.0483 | — | — | 0.0835 |
| Average hours DT/FLR | 119.1 | 179.6 | 69.4 | — | — | 23.9 |
| Median hours DT/FLR | 48.0 | 80.0 | 48.0 | — | — | 12.0 |
| Number of FLR's with no DT given | 9 | 2 | 14 | — | — | 4 |
| Failed component[b] | | | | | | |
| Bearing | 11 | 6 | 28 | 1 | — | 4 |
| Winding | 5 | 3 | 16 | — | — | 7 |
| Rotor | 1 | 1 | 2 | — | — | — |
| Shaft or coupling | — | 2 | 4 | — | — | — |
| Brushes or slip rings | — | — | — | 1 | — | — |
| External dev. | — | 3 | — | — | — | — |
| Not specified | 1 | 2 | — | — | — | — |

[a] Small sample size.
[b] Some respondents reported more than one failed component per failure.

TABLE VII
ENCLOSURES—INDOOR

| | Open | Weather Protected | Totally Enclosed (TEFC, E.P., D.I.P.) | Totally Enclosed (Open Pipe Vent) | Totally Enclosed (Water-Air) | Totally Enclosed (Air-Air) |
|---|---|---|---|---|---|---|
| Number of FLR's | 206 | 8 | 29 | 4[a] | 6[a] | 9 |
| Sample size (unit yr) | 2480.8 | 170.6 | 312.5 | 24.7 | 119.5 | 229.5 |
| FLR rate (FLR's/unit yr) | 0.0830 | 0.0469 | 0.0928 | — | — | 0.0392 |
| Average hours DT/FLR | 58.8 | 48.0 | 28.9 | — | — | 106.7 |
| Median hours DT/FLR | 16.0 | 16.0 | 10.0 | — | — | 8.0 |
| Number of FLR's with no DT given | 62 | 1 | 14 | — | — | 2 |
| Failed component[b] | | | | | | |
| Bearing | 96 | 1 | 14 | 2 | — | 5 |
| Winding | 47 | — | 5 | — | — | 3 |
| Rotor | 3 | — | 2 | — | — | — |
| Shaft or coupling | 11 | 2 | — | 1 | — | — |
| Brushes or slip rings | 12 | — | — | 1 | 1 | — |
| External dev. | 6 | 4 | — | — | 4 | — |
| Not specified | 32 | 1 | 8 | — | 1 | 1 |

[a] Small sample size.
[b] Some respondents reported more than one failed component per failure.

r/min motors show a slightly higher failure rate than the 0–720 r/min motors. An interesting result is that the highest speed larger motors failed only approximately one-half the rate of the slowest speed smaller motors.

## ENCLOSURES VERSUS ENVIRONMENT

Unexpected results of Part 1 were the relative failure rates of open and enclosed motors and the relative failure rates of indoor and outdoor motors. To evaluate these results further, the categories are combined in Tables VI and VII with failed components also included.

Table VI shows the highest failure rate with open type motors as would be expected since the environment is outdoor. In Table VII it was the second class of enclosed motors, which includes TEFC, explosion-proof (E.P.), and dust ignition proof (D.I.P.), with the highest failure rate. Combining all enclosed classes in each table shows very little difference in failure rate between indoor enclosed motors and outdoor enclosed motors.


Copyright © 1998 IEEE. All rights reserved.

TABLE VIII
SPEED AND SERVICE FACTOR VERSUS FAILED COMPONENT AND CAUSES[a]

| | Service Factor | | | Speed (r/min) | | |
|---|---|---|---|---|---|---|
| | 1.0 | 1.15 | >1.15 | 0–720 | 721–1800 | 3600 |
| **Failed Component[b]** | | | | | | |
| Bearing | 47.8 | 39.6 | 40 | 21.1 | 46.2 | 56.5 |
| Winding | 27.8 | 24.8 | — | 29.6 | 25.9 | 21.7 |
| Rotor | 2.8 | 5.0 | — | 8.5 | 2.0 | 5.8 |
| Shaft or Coupling | 6.7 | 6.4 | — | 5.6 | 6.9 | 5.8 |
| Brushes or slip ring | 7.2 | 1.5 | — | 15.5 | 2.0 | — |
| External Device | 0.6 | 6.4 | 60 | 8.5 | 2.8 | 5.8 |
| Not Specified | 7.2 | 16.3 | — | 11.3 | 14.2 | 4.3 |
| Total FLR's | 180 | 202 | 5 | 71 | 247 | 69 |
| **Failure initiator** | | | | | | |
| Transient Overvoltage | 2.5 | 0.6 | — | 1.6 | 0.5 | 1.8 |
| Overheating | 15.2 | 11.2 | 20.0 | 8.1 | 13.5 | 17.9 |
| Other Insulation Breakdown | 12.7 | 12.8 | — | 12.9 | 14.4 | 5.4 |
| Mechanical Breakage | 36.7 | 30.2 | 20.0 | 16.1 | 36.0 | 41.1 |
| Electrical Fault | 10.1 | 3.9 | 60.0 | 12.9 | 6.8 | 5.4 |
| Stalled Motor | 1.3 | 0.6 | — | 3.2 | — | 1.8 |
| Other | 21.5 | 40.8 | — | 45.2 | 28.8 | 26.8 |
| Total FLR's | 158 | 179 | 5 | 62 | 222 | 56 |
| **Failure contributor** | | | | | | |
| Persistent Overloading | 5.7 | 3.3 | — | 4.8 | 5.1 | — |
| High-Ambient Temperature | 5.7 | 1.1 | — | 1.6 | 3.3 | 3.8 |
| Abnormal Moisture | 7.1 | 4.9 | — | 4.8 | 6.5 | 3.8 |
| Abnormal Voltage | 2.1 | 1.1 | — | 1.6 | 0.9 | 3.8 |
| Abnormal Frequency | — | 1.1 | — | — | 4.7 | 1.9 |
| High Vibration | 14.2 | 16.8 | — | 14.5 | 14.9 | 18.9 |
| Aggressive Chemicals | 7.1 | 2.2 | — | 3.2 | 5.1 | 1.9 |
| Poor Lubrication | 19.9 | 10.9 | 40.0 | 9.7 | 14.4 | 24.5 |
| Poor Ventilation or Cooling | 2.1 | 4.9 | — | 8.1 | 2.8 | 1.9 |
| Normal Deterioration/Age | 17.0 | 33.2 | 60.0 | 25.8 | 28.8 | 18.9 |
| Other | 19.1 | 20.1 | — | 25.8 | 17.7 | 20.8 |
| Total FLR's | 141 | 184 | 5 | 62 | 215 | 53 |
| **Failure underlying cause** | | | | | | |
| Defective Component | 12.9 | 25.6 | 60.0 | 19.4 | 19.6 | 23.1 |
| Poor Installation/Testing | 12.9 | 13.5 | — | 4.8 | 14.4 | 17.3 |
| Inadequate Maintenance | 22.4 | 20.5 | 20.0 | 16.1 | 25.8 | 11.5 |
| Improper Operation | 2.0 | 5.1 | — | 4.8 | 2.6 | 5.8 |
| Improper Handling/Shipping | 0.7 | 0.6 | — | — | 1.0 | — |
| Inadequate Physical Protection | 10.9 | 1.9 | — | 3.2 | 6.7 | 7.7 |
| Inadequate Electrical Protection | 9.5 | 3.2 | — | 4.8 | 6.7 | 5.8 |
| Personnel Error | 4.1 | 7.7 | 20.0 | 11.3 | 4.1 | 7.7 |
| Outside Agency-Not Personnel | 5.4 | 2.6 | — | 8.1 | 3.6 | — |
| Motor-Driven Equipment Mismatch | 4.1 | 5.8 | — | 8.1 | 4.6 | 1.9 |
| Other | 15.0 | 13.5 | — | 19.4 | 10.8 | 19.2 |
| Total FLR's | 147 | 156 | 5 | 62 | 194 | 52 |

[a] Number of failures in percent.
[b] Some respondents reported more than one failed component per failure.

The failed components followed the general overall trend with bearings and windings failing most, with bearings predominant. Only in the last enclosure class of outdoor motors was the trend between bearings and windings reversed.

## FAILED COMPONENT AND CAUSES

Table VIII takes the speed analysis a step further by showing the failed components and causes of failure reported for the speed classes. With failed components distributed between the speed classes, the slowest speed motors show windings as the leading failed component and an increase in bearing failure percentages with increasing speed rating. Under causes an interesting result is the relative low percent blamed on inadequate maintenance for the highest speed rating. Also, deterioration from age was less for this class. This supports the low failure rate for high-speed motors.

Table VIII also breaks down service factor with failed component and causes. Bearings again led all components in failures with windings second. There seems to be no real outstanding difference in causes between 1.0 and 1.15 SF. However one difference that undoubtedly contributed to the failure rate of 1.15-SF motors is the contributing cause of

Copyright © 1998 IEEE. All rights reserved.

TABLE IX
CAUSES VERSUS VARIOUS CATEGORIES[a]

| | Type | | Grounding | | | Components | |
|---|---|---|---|---|---|---|---|
| | Induction | Synchronous | Solid | Impedence | Ungrounded | Bearings | Windings |
| **Failure initiator** | | | | | | | |
| Transient overvoltage | 1.4 | — | 0.9 | 1.4 | 2.4 | — | 4.1 |
| Overheating | 14.7 | — | 14.0 | 11.7 | 14.5 | 12.4 | 21.4 |
| Other insul. breakdown | 11.9 | 21.1 | 16.7 | 11.0 | 9.6 | 1.9 | 36.7 |
| Mechanical breakage | 37.4 | 5.3 | 31.6 | 26.2 | 47.0 | 50.3 | 10.2 |
| Electrical fault | 5.8 | 23.7 | 8.8 | 4.8 | 10.8 | 3.7 | 11.2 |
| Stalled motor | 0.7 | 2.6 | — | 0.7 | 2.4 | — | 2.0 |
| Other | 28.1 | 47.4 | 28.1 | 44.1 | 13.3 | 31.7 | 14.3 |
| Total FLR's | 278 | 38 | 114 | 145 | 83 | 161 | 98 |
| **Failure contributor** | | | | | | | |
| Persistent overload | 4.9 | 2.7 | 4.5 | 4.4 | 3.7 | 1.4 | 6.5 |
| High ambient temperature | 3.4 | — | 3.6 | 0.7 | 6.1 | .7 | 7.6 |
| Abnormal moisture | 6.7 | 2.7 | 8.0 | 4.4 | 4.9 | 2.7 | 18.5 |
| Abnormal voltage | 1.5 | 2.7 | — | 2.2 | 2.4 | — | 5.4 |
| Abnormal frequency | 0.7 | — | 0.9 | 0.7 | — | — | 1.1 |
| High vibration | 17.6 | 5.4 | 16.1 | 13.2 | 18.3 | 21.8 | 8.7 |
| Aggressive chemicals | 4.5 | 2.7 | 1.8 | 4.4 | 7.3 | 5.4 | 6.5 |
| Poor lubrication | 16.9 | 8.1 | 5.4 | 16.2 | 26.8 | 31.3 | 5.4 |
| Poor ventilation or cooling | 2.2 | 2.7 | 8.0 | — | 3.7 | — | 7.6 |
| Normal deterioration/age | 24.0 | 51.4 | 33.9 | 30.9 | 9.8 | 20.4 | 18.5 |
| Other | 17.6 | 21.6 | 17.9 | 22.8 | 17.1 | 16.3 | 14.1 |
| Total FLR's | 267 | 37 | 112 | 136 | 82 | 147 | 92 |
| **Failure underlying cause** | | | | | | | |
| Defective component | 20.3 | 22.2 | 23.5 | 14.5 | 24.4 | 17.8 | 10.9 |
| Poor install/testing | 15.9 | — | 7.8 | 12.9 | 19.5 | 14.5 | 10.9 |
| Inadequate maintenance | 22.8 | 11.1 | 25.5 | 18.5 | 20.7 | 27.6 | 19.6 |
| Improper operation | 3.3 | 2.8 | 3.9 | 4.0 | 2.4 | 2.0 | 6.5 |
| Improper handling/shipping | .8 | — | 1.0 | 0.8 | — | 0.7 | — |
| Inadequate physical protection | 6.5 | 2.8 | 2.9 | 7.3 | 8.5 | 7.9 | 7.6 |
| Inadequate electrical protection | 5.3 | 11.1 | 6.9 | 6.5 | 4.9 | 2.6 | 15.2 |
| Personnel error | 5.7 | 5.6 | 3.9 | 6.5 | 8.5 | 7.2 | 5.4 |
| Outside agency-not personnel | 2.8 | 13.9 | 3.9 | 4.8 | 2.4 | 2.0 | 3.3 |
| Motor-driven equip. mismatch | 4.9 | — | 5.9 | 6.5 | 1.2 | 5.9 | 4.3 |
| Other | 11.8 | 30.6 | 14.7 | 17.7 | 7.3 | 11.8 | 16.3 |
| Total FLR's | 246 | 36 | 102 | 124 | 82 | 152 | 92 |

[a] Number of failures in percent.

normal deterioration from age which is about twice that for 1.0-SF motors.

Table IX is somewhat of a mix of some of the interesting categories brought out in other tables with emphasis on causes. Comparing induction and synchronous motors is difficult here because of the overwhelming response of induction motors. However, some of the results of other categories are supported. For instance, continuous duty induction motors had a higher failure rate than intermittent duty induction motors. Aside from the obvious influence of mechanical breakage, overheating and insulation breakdown are supportive. The contributing cause of normal deterioration from age is also evident.

The table correlates bearing and winding failures with causes rather well. Additionally, underlying causes show that both defective component and inadequate maintenance were reported as major factors in bearing and winding failures with inadequate maintenance the most significant. Failure initiators and contributors follow a reasonably logical trend.

The trend in failure rates for the categories of grounding do not appear supportive in this table if voltage related causes are expected to be obvious. This category exemplifies others where causes do not correlate well. It seems that in these results bearing and winding failures (especially bearing failures) and their related causes obscure some of the other cause reasoning.

## MAINTENANCE

Tables X–XII attempt to delve further into the effects of maintenance on failure data. Table X reveals when the failed components were discovered. It gives some correlation to the effect of maintenance since one would expect a significant number of failures to be discovered during maintenance or testing under a good maintenance program. One observation for these data is that 56 percent of the bearing failures were discovered during normal operation. This is supported reasonably well by Table IX which shows inadequate maintenance as significant. Except for brushes and slip rings, all failed components show an obvious greater percentage of discovery during normal operation.

Tables XI and XII are presented to take a closer look at the underlying cause, inadequate maintenance, and associated failure data blamed on this cause. Again bearings by far led all other components in failures. Approximately 25 percent of all



Copyright © 1998 IEEE. All rights reserved.

TABLE X
FAILED COMPONENT VERSUS TIME DISCOVERED[a]

| Failed Component[b] | Time Discovered: Normal Operation | Maintenance or Test | Other |
|---|---|---|---|
| Bearing | 36.6 | 60.6 | 50.0 |
| Winding | 33.1 | 8.3 | 28.6 |
| Rotor | 5.1 | 1.8 | — |
| Shaft or coupling | 5.8 | 8.3 | 14.3 |
| Brushes or slip rings | 3.1 | 7.3 | — |
| External device | 5.1 | 3.7 | — |
| Not specified | 11.3 | 10.1 | 7.1 |
| Total FLR's | 257 | 109 | 14 |

[a] Number of failures in percent.
[b] Some respondents reported more than one failed component per failure.

TABLE XI
INADEQUATE MAINTENANCE
FAILED COMPONENTS AND CAUSES[a]

| | |
|---|---|
| Failed component[b] | |
| Bearing | 59.6 |
| Winding | 25.4 |
| Rotor | 1.4 |
| Shaft or coupling | — |
| Brushes or slip ring | 8.5 |
| External device | 1.4 |
| Other | 4.2 |
| Total FLR's | 71 |
| Failure initiator | |
| Transient overvoltage | — |
| Overheating | 4.2 |
| Other insulation breakdown | 14.1 |
| Mechanical breakage | 52.1 |
| Electrical fault | 2.8 |
| Stalled motor | — |
| Other | 26.8 |
| Total FLR's | 71 |
| Failure contributor | |
| Persistent overloading | — |
| High ambient temperature | 4.2 |
| Abnormal moisture | 7.0 |
| Abnormal voltage | — |
| Abnormal frequency | — |
| High vibration | 4.2 |
| Aggressive chemicals | 9.9 |
| Poor lubrication | 43.7 |
| Poor ventilation/cooling | 1.4 |
| Normal deterioration/age | 18.3 |
| Other | 11.3 |
| Total FLR's | 71 |

[a] Number of failures in percent.
[b] Some respondents reported more than one failed component per failure.

TABLE XII
INADEQUATE MAINTENANCE FAILURE DATA

| | |
|---|---|
| Number of FLR's | 66 |
| Sample size (unit yr) | 603.6 |
| FLR rate (FLR's/unit yr) | 0.1093 |
| Average hours DT/FLR | 80.8 |
| Median hours DT/FLR | 9.0 |
| Number of FLR's with no DT given | 13 |
| Maintenance quality and cycle | Number of FLR's (percent) |
| Excellent | |
| <12 mo | 25.8 |
| 12–24 mo | — |
| >24 mo | — |
| Fair | |
| <12 mo | 37.9 |
| 12–24 mo | 7.6 |
| >24 mo | 3.0 |
| Poor | |
| <12 mo | 3.0 |
| 12–24 mo | 12.1 |
| >24 mo | — |
| Total FLR's | 66 |

bearing failures were reported due to inadequate maintenance. Close to 44 percent of the brush and ship ring failures were reported due to this cause which does not follow well from Table X. The single largest contributor with this underlying cause is poor lubrication.

Table XII shows a definite higher failure rate for inadequate maintenance related failures than the Part 1 failure rates for maintenance quality. In Part 1 the failure rate results for excellent to poor maintenance ranged from 0.0708 to 0.0797, respectively.

Data for when failures were discovered versus maintenance quality are presented in Table XIII. It was expected that the fair and excellent categories would be significantly different in when failures were discovered, but the results show very little difference. The same table also includes months since last maintenance versus maintenance quality. The failures seem to follow the same trend as scheduled cycle reported with most occurring less than 12 mo since maintenance. This table is presented in the same format as [2, table 70]. Those results showed an obvious difference between fair and excellent maintenance overall. The trend in failures was to a certain degree increasing directly with months since maintenance and indirectly with maintenance quality. The new survey results here show a very different trend with most failures occurring where last maintenance was less than 12 mo prior to the failure.

## GENERAL DISCUSSION

The additional comparisons and analyses made in this paper have supported results of Part 1 in some cases and in other cases have revealed results that were obscured in the general categorical tables of Part 1. Not all questions are answered here, and there are certainly many more categories and comparisons that can be made with the data of this survey. As examples, bearing and winding failures compared to starts per

Copyright © 1998 IEEE. All rights reserved.

TABLE XIII
MAINTENANCE QUALITY VERSUS TIME FAILURES DISCOVERED AND MONTHS SINCE MAINTENANCE[a]

| Maintenance Quality | Time Discovered | | | Months Since Maintenance | | |
|---|---|---|---|---|---|---|
| | Normal Operation | Maintenance or Test | Other | <12 | 12-24 | >24 |
| Excellent | 85 | 35 | 1 | 87 | 17 | 6 |
| Fair | 132 | 63 | 10 | 102 | 22 | 8 |
| Poor | 15 | 3 | 1 | 11 | 5 | — |
| None | 7 | — | — | — | 1 | 5 |
| Total | 239 | 101 | 12 | 200 | 45 | 19 |
| Inadequate Maintenance Cause | | | | | | |
| Excellent | 5 | 12 | — | 17 | — | — |
| Fair | 22 | 8 | 2 | 16 | 1 | 1 |
| Poor | 8 | 1 | 1 | 4 | 1 | — |
| None | 7 | — | — | — | 1 | 5 |
| Total | 42 | 21 | 3 | 37 | 3 | 6 |

[a] Number of failures.

day and duty application could add meaning to the results. The Reliability Subcommittee is presently evaluating criteria that should be presented in a third set of results, Part 3. Interested readers should submit comments and suggestions on information they would like to see in Part 3. In the format presented in these results, bearing failures and their causes were very dominant and likely prevent other less significant correlations to be evident.

## ACKNOWLEDGMENT

The Reliability Subcommittee acknowledges and expresses its appreciation to J. Rizo and W. H. Healy of El Paso Natural Gas Company for assistance in the computer program used for the analysis of the data for this presentation.

## REFERENCES

[1] IEEE Committee Report, "Report of large motor reliability survey of industrial and commercial installations, Part I," in *1983 IEEE I&CPS Conference Record*; also *IEEE Trans. Ind. Appl.*, vol. IA-21, pp. 853–864, July/Aug. 1985.

[2] IEEE Committee Report, "Report on Reliability Survey of Industrial Plants, Part VI—Maintenance Quality of Electrical Equipment," in IEEE Standard 493, 1980.

**Pat O'Donnell** (S'64–M'68–SM'80), for a photograph and biography, please see page 864 of this issue.



Copyright © 1998 IEEE. All rights reserved.

# Report of Large Motor Reliability Survey of Industrial and Commercial Installations: Part 3

**MOTOR RELIABILITY WORKING GROUP**
POWER SYSTEMS RELIABILITY SUBCOMMITTEE
POWER SYSTEMS ENGINEERING COMMITTEE
INDUSTRIAL & COMMERCIAL POWER SYSTEMS DEPARTMENT
IEEE INDUSTRY APPLICATIONS SOCIETY

*Abstract*—**Results of a survey conducted in 1982 of the reliability of large motors have been presented and published in two parts [1], [2]. These results have generated numerous questions and comments and, consequently, the need to further analyze the data of the survey was recognized. Part 1 presents general results based on categories of motor types and applications specifically requested in the survey questionnaire. Part 2 combines various categories and addresses some questions resulting from Part 1. Part 3 of the survey results is presented here to address new questions and comments and to add more specific analyses of areas not yet explored. These results, along with Parts 1 and 2, provide the complete complement of analysis to date.**

## Introduction

THE THIRD part of the results of the 1982 survey of reliability of large motors is presented here and summarized in Tables I through VII. As with Part 2, these results focus on new comparisons of the data. The tables address some questions and comments received since presentation of Part 2 and provide additional analysis of causes. The order of the tables as presented is more or less random and there is no intent to portray a delibrate order.

As in Parts 1 and 2, where no data is given, there is insufficient response to the questionnaire. An asterisk represents failures reported but with insufficient number (less than eight) for credible results. Additionally it is again emphasized that the tables and corresponding discussions represent results of the survey and that there is no intent to draw definite conclusions. Finally, as in Parts 1 and 2, differences in total failures between the various categories of Part 3 reflect missing data from some survey responses.

Paper ICPSD 86-13, approved by the Power Systems Engineering Committee of the IEEE Industry Applications Society for presentation at the 1986 Industrial and Commercial Power Systems Technical Conference, Philadelphia, PA, September 8-11. Manuscript released for publication September 9, 1986.

*Members of the IEEE Motor Reliability Working Group*

C. Heising is with Industrial Reliability Technology, 216 Farwood Road, Philadelphia, PA 19151.

P. O'Donnell, *Coordinating Author*, is with the El Paso Natural Gas Company, P. O. Box 1492, El Paso, TX 79978.

C. Singh is with the Department of Electrical Engineering, Texas A&M University, College Station, TX 77843.

S. J. Wells is at 1743 Lake Oak Drive, Seabrook, TX 77586.

IEEE Log Number 8612073.

## Enclosure—Indoor and Outdoor

Tables I and II are presented to take a closer look at the causes of failures reported for various enclosures in both indoor and outdoor environments. As was evident in the previously published results, most indoor applications were "open" motors and most outdoor applications were totally enclosed fan-cooled (TEFC), explosion-proof or dust ignition-proof motors.

For the outdoor motors with the above enclosures, Table I shows that the major failure initiators are well supported by the failure contributors. The main underlying causes point to defective components and inadequate maintenance. For indoor open motors in Table II, failure initiators and failure contributors again match, but inadequate maintenance was by far the single largest underlying cause.

Comparison of indoor and outdoor environments also reveals certain opposite trends relative to causes of all failures (Part 1, Table 13). For instance, the following causes show opposite trends between indoor and outdoor applications when their respective percentages of total are compared to the same for all applications of Part 1, Table 13: mechanical breakage, electrical fault or malfunction, abnormal moisture, poor lubrication, inadequate electrical protection, inadequate maintenance, and personnel error. An example will make this more clear. For outdoor motors, mechanical breakage is 26/90 or 28.9 percent of the total number of failures for "failure initiator," while for all applications 113/341 is 33.1 percent of the number of failures for "failure initiator." Indoor motors show 85/240, or 35.4 percent versus 33.1 percent.

## High Vibration Cause

Tables III and IV present additional results to Parts 1 and 2 for failures blamed on vibration. Table III shows 48 failures blamed on vibration where data are also available on failure initiator and underlying cause. As would be expected, most failures were initiated by mechanical breakage. It is interesting that most underlying causes were reported as defective component and poor installation or testing. Only three failures list inadequate maintenance as a contributing cause. For

Copyright © 1998 IEEE. All rights reserved.

TABLE I
ENCLOSURES—OUTDOOR
(No. of Failures)

| Causes | Open | Weather-protected | Totally Enclosed TEFC, Exp., D.I. | Totally Enclosed Open Pipe Vent | Totally Enclosed Water-Air | Totally Enclosed Air-Air | Total | All Applications (Part I) |
|---|---|---|---|---|---|---|---|---|
| Failure Initiator | | | | | | | | |
| Transient overvoltage | 1 | — | 1 | — | — | — | 2 | 5 |
| Overheating | 2 | 4 | 9 | — | — | — | 15 | 45 |
| Other insulation breakdown | 4 | 1 | 10 | 1 | — | — | 16 | 42 |
| Mechanical breakage | 6 | 7 | 11 | 1 | — | 1 | 26 | 113 |
| Electrical fault/malfunction | 1 | — | 4 | — | — | 4 | 9 | 26 |
| Stalled motor | — | — | 1 | — | — | — | 1 | 3 |
| Other | 4 | 6 | 5 | — | — | 6 | 21 | 107 |
| Failure Contributor | | | | | | | | |
| Persistent overload | — | 2 | — | — | — | — | 2 | 14 |
| High ambient temperature | — | 1 | 1 | — | — | — | 2 | 10 |
| Abnormal moisture | 2 | 2 | 5 | — | — | — | 9 | 19 |
| Abnormal voltage | 2 | — | — | — | — | — | 2 | 5 |
| Abnormal frequency | — | — | — | — | — | — | — | 2 |
| High vibration | 1 | 3 | 6 | — | — | 1 | 11 | 51 |
| Aggressive chemicals | 1 | — | 1 | 1 | — | 3 | 6 | 14 |
| Poor lubrication | — | 2 | 3 | — | — | 1 | 6 | 50 |
| Poor ventilation/cooling | — | — | — | — | — | 4 | 4 | 13 |
| Normal deterioration/age | 2 | 2 | 7 | 1 | — | 2 | 14 | 87 |
| Other | 2 | 5 | 9 | — | — | — | 16 | 65 |
| Failure Underlying Cause | | | | | | | | |
| Defective component | 3 | 4 | 9 | — | — | 2 | 18 | 62 |
| Poor installation/testing | 2 | 3 | 4 | — | — | — | 9 | 40 |
| Inadequate maintenance | 3 | 2 | 7 | 1 | — | — | 13 | 66 |
| Improper operation | — | — | — | — | — | 1 | 1 | 11 |
| Improper handling | 1 | — | — | — | — | — | 1 | 2 |
| Inadequate physical protection | 4 | 2 | — | — | — | — | 6 | 19 |
| Inadequate electrical protection | 2 | 2 | 3 | 1 | — | — | 8 | 18 |
| Personnel error | — | — | 1 | — | — | 1 | 2 | 21 |
| Outside agency-not pers. | — | — | — | — | — | 2 | 2 | 12 |
| Motor-load mismatch | — | 1 | 1 | — | — | 3 | 5 | 15 |
| Other | — | 3 | 9 | — | — | 2 | 14 | 43 |

convenience, the total of 51 failures blamed on high vibration (Part 1) is also shown.

Table IV compares vibration failure causes to size. Only two size ranges have sufficient response to allow meaningful results. The table shows that the percent of vibration failures to total failures increases slightly with size.

### Starts/Day Versus Continuous Duty Application

The results in Table V attempt to further evaluate the effects of starting on failures. Only continuous duty applications are considered, to avoid confusion over trying to distinguish between various degrees of intermittent duty. The first two voltage classes of induction motors, in which most of the survey data were collected, are emphasized. Also, very little data were collected for the categories of more than ten starts per day.

As can be seen from the table, overall there is very little difference in failure rates between less-than-one and one-to-ten starts per day, and very little difference between the two voltage classes. There does, however, seem to be a trend in longer downtimes for the one-to-ten starts per day category, suggesting that failures were more severe.

### Downtime Versus Repair Urgency and Time Discovered

Downtime is expected to be affected by the urgency with which repairs are made and also by when failures are discovered, which would seem to affect the severity of failures. Table VI compares downtime with these categories to get a different view than Parts 1 and 2 provide. Overall the trend in number of failures decreases as downtime increases. There are some obvious deviations from this trend at the range of 51–100 h downtime per failure. Also this trend is obscure under the repair urgency "round-the-clock." It is interesting that for this category there are practically as many failures in the higher downtime ranges as in the lower downtime ranges. Another somewhat unexpected result is that there is no obvious difference in the distribution of failures between the categories under the heading "time discovered." However, the results show that failures corrected by "replace with spare" are predominantly in the least downtime range, as would be expected.

### Horsepower Versus Speed: Induction Motors

A recent motor reliability survey [3] sponsored by the Electric Power Research Institute (EPRI) and conducted by the


Copyright © 1998 IEEE. All rights reserved.

TABLE II
ENCLOSURES—INDOOR
(No. of Failures)

| Causes | Open | Weather-protected | Totally Enclosed TEFC, Exp., D.I. | Totally Enclosed Open Pipe Vent. | Totally Enclosed Water-Air | Totally Enclosed Air-Air | Total |
|---|---|---|---|---|---|---|---|
| Failure Initiator | | | | | | | |
| Transient overvoltage | 3 | — | — | — | — | — | 3 |
| Overheating | 25 | — | 3 | — | 1 | 1 | 30 |
| Other insulation breakdown | 22 | — | 3 | — | 1 | 1 | 27 |
| Mechanical breakage | 68 | 1 | 11 | 2 | — | 3 | 85 |
| Electrical fault/malfunction | — | 5 | 1 | — | — | 3 | 9 |
| Stalled motor | — | — | — | — | — | — | — |
| Other | 68 | 1 | 10 | 2 | 4 | 1 | 86 |
| Failure Contributor | | | | | | | |
| Persistent overload | — | — | 3 | — | — | 1 | 4 |
| High ambient temperature | — | — | 3 | — | — | 1 | 4 |
| Abnormal moisture | 10 | — | — | — | — | — | 10 |
| Abnormal voltage | — | — | — | — | — | — | — |
| Abnormal frequency | — | — | — | — | — | — | — |
| High vibration | 35 | 1 | 1 | — | — | 2 | 39 |
| Aggressive chemicals | — | 1 | — | 1 | — | — | 2 |
| Poor lubrication | 38 | — | 3 | — | 1 | 2 | 44 |
| Poor ventilation/cooling | — | 1 | — | 2 | 1 | — | 4 |
| Normal deterioration/age | 38 | 3 | 14 | 1 | — | 3 | 59 |
| Other | 38 | 1 | 5 | — | 4 | — | 48 |
| Failure Underlying Cause | | | | | | | |
| Defective component | 27 | 4 | 6 | 1 | 5 | — | 43 |
| Poor installation/testing | 28 | — | 1 | — | — | 1 | 30 |
| Inadequate maintenance | 41 | 1 | 8 | 1 | — | 2 | 53 |
| Improper operation | — | — | 1 | — | — | 1 | 2 |
| Improper handling | — | — | — | — | — | — | — |
| Inadequate physical protection | 10 | — | 1 | 1 | — | 1 | 13 |
| Inadequate electrical protection | — | 1 | — | — | — | 2 | 3 |
| Personnel error | 16 | — | — | — | — | 1 | 17 |
| Outside agency—not pers. | 7 | — | 1 | 1 | 1 | — | 10 |
| Motor-load mismatch | 9 | — | 1 | — | — | — | 10 |
| Other | 23 | 1 | 4 | — | — | 1 | 29 |

TABLE III
VIBRATION FAILURES
(No. of Failures)

| | | |
|---|---|---|
| Failure Initiator | Transient overvoltage | 0 |
| | Overheating | 6 |
| | Other insulation breakdown | 2 |
| | Mechanical breakage | 23 |
| | Electrical fault/malfunction | 3 |
| | Stalled motor | 1 |
| | Other | 13 |
| Failure Underlying Cause | Defective component | 14 |
| | Poor installation/test. | 15 |
| | Inadequate maintanance | 3 |
| | Improper operation | 0 |
| | Improper handling/shipping | 1 |
| | Inadequate physical protection | 3 |
| | Inadequate electrical protection | 0 |
| | Personnel error | 4 |
| | Outside agency—not pers. | 0 |
| | Motor-load mismatch | 3 |
| | Other | 5 |
| Total Vibration Failures (From Part 1) | | 51 |

TABLE IV
VIBRATION FAILURES VERSUS SIZE

| Motor Size | No. of Vibration Failures | Total No. Of Failures—All Causes | Percent |
|---|---|---|---|
| 201-500 hp | 27 | 218 | 12.4 |
| 501-5000 hp | 22 | 131 | 16.8 |
| 5001-10 000 hp | 1 | 9 | * |
| < 10 000 hp | — | — | — |

* Small sample size.

Copyright © 1998 IEEE. All rights reserved.

TABLE V
STARTS PER DAY VERSUS CONTINUOUS DUTY

| | No. of Starts Per Day | No. of Flrs | Total Population U-Yrs | Flr Rate | Avg. Hrs D.T./Flr | Med Hrs D.T./Flr |
|---|---|---|---|---|---|---|
| All Motors | <1 | 241 | 3111.6 | 0.0775 | 48.7 | 12 |
| | 1-10 | 90 | 1178.1 | 0.0764 | 90.8 | 16 |
| 0-1000 V | All motors | | | | | |
| | <1 | 71 | 854.5 | 0.0831 | 36.1 | 8 |
| | 1-10 | 22 | 244.5 | 0.0900 | 111.1 | 48 |
| | Individual Motors | | | | | |
| | <1 | 68 | 768.7 | 0.0885 | 37.2 | 8 |
| | 1-10 | 13 | 148.4 | 0.0876 | 50.7 | 36 |
| 1000-5000 V | All motors | | | | | |
| | <1 | 163 | 2185.0 | 0.0746 | 55.7 | 12 |
| | 1-10 | 66 | 859.1 | 0.0768 | 83.6 | 16 |
| | Individual Motors | | | | | |
| | <10 | 152 | 1876.9 | 0.0810 | 54.7 | 12 |
| | 1-10 | 38 | 497.0 | 0.0765 | 102.6 | 16 |

TABLE VI
DOWNTIME VERSUS REPAIR URGENCY AND TIME DISCOVERED
(No. of Flrs)

| | Repair Urgency | | | | Time Discovered | | |
|---|---|---|---|---|---|---|---|
| Downtime Per Flr. (Hours) | Normal Working Hours | Round the Clock | Replace with Spare | Low Priority | During Normal Operation | During Maintenance or Test | Other |
| 1-12 | 14 | 2 | 89 | — | 66 | 35 | 4 |
| 13-24 | 32 | 13 | 9 | — | 35 | 20 | — |
| 25-50 | 10 | 6 | 2 | — | 12 | 6 | — |
| 51-100 | 13 | 11 | 2 | — | 20 | 6 | — |
| 101-150 | 6 | 6 | — | — | 12 | — | — |
| 151-200 | 4 | 4 | 1 | 1 | 5 | 4 | 2 |
| 201-350 | 3 | 3 | 1 | 3 | 7 | 3 | — |
| <350 | 5 | — | 1 | 2 | 8 | 1 | — |

TABLE VII
HORSEPOWER VERSUS SPEED
INDUCTION MOTORS

| | No. of Failures | Unit Years | Failure Rate |
|---|---|---|---|
| 0-720 r/min | | | |
| 201-500 hp | 7 | 137.92 | 0.0508 |
| 501-5 000 hp | 12 | 175.16 | 0.0685 |
| 5001-10 000 hp | — | — | — |
| >10 000 hp | — | — | — |
| 721-1800 r/min | | | |
| 201-500 hp | 148 | 1922.43 | 0.0770 |
| 501-5000 hp | 66 | 740.1 | 0.0892 |
| 5001-10 000 hp | 1 | 2.83 | |
| >10 000 hp | — | 7.5 | — |
| 3600 r/min | | | |
| 201-500 hp | 42 | 655.75 | 0.0640 |
| 501-5 000 hp | 16 | 358.66 | 0.0446 |
| 5001-10 000 hp | — | — | — |
| >10 000 hp | — | — | — |

* Small sample size.

General Electric Company focused on electric utility powerhouse motors. Several interesting correlations between the EPRI survey and the IEEE survey emerged. In a Discussion [4] of Part 1 of the IEEE results by participants in the EPRI survey it was noted that hp per pole had been analyzed in past studies as affecting failure rate. The data in the IEEE survey did not allow this specific analysis. Table VII, presented here, is a more general representation of this subject, showing ranges of speed and of size. Induction motors are the most common type in use and consequently most survey data were collected for this type. Table VII has been limited to induction motors. It should be noted that this table was also published in the Closure to the Discussion referenced in the aforementioned. Similar results were published in Part 2, Table 5, but included all types of motors surveyed.

The highest failure rate appears in the middle speed range and at 501-5000 hp. One might observe that within the first two speed ranges, as hp per pole increases (assuming that, specifically, 720 r/min and 1800 R/min are predominant in these speed ranges) so also does failure rate. However, the highest speed range reverses this trend. Aside from this observation there is not a significant difference in failure rates between the different horsepower ranges within the first two



Copyright © 1998 IEEE. All rights reserved.

speed ranges. Table 5 of Part 2, which included all motor types surveyed, showed similar trends.

### General Discussion

The results of Part 3 have presented several new aspects of the data. Most are a result of questions and comments received concerning Parts 1 and 2, but in some cases the data did not allow exact analysis. In some cases trends are evident and in some cases they are not. Some of the results expected or at least anticipated, for example, were that most failures occurred with lower downtime per failure, high vibration resulted in mechanical breakage, and longer downtime per failure occurred with induction motors starting more than once per day. Some of the interesting results were the opposite trends in causes of failures between indoor and outdoor applications and vibration causes being blamed mostly on defective component and poor installation or testing.

Overall, Part 3 has added credibility to some previously published results and has reinforced some areas of causes that are otherwise normally speculated.

### References

[1] Pat O'Donnell, Coordinating Author, "Report of large motor reliability survey of industrial and commercial installations—Part 1," IEEE Committee Report, in IEEE Trans. Ind. Appl., vol. IA-21, no. 4, pp. 853-864, July/Aug. 1985.

[2] Pat O'Donnell, Coordinating Author, "Report of large motor reliability survey of industrial and commercial installations—Part 2," IEEE Committee Report, in IEEE Trans. Ind. Appl., vol. IA-21, no. 4, pp. 865-872, July/Aug. 1985.

[3] P. F. Albrecht, J. C. Appiarius, R. M. McCoy, E. L. Owen, and D. K. Sharma, "Assessment of the reliability of motors in utility applications—Updated," IEEE Trans. Energy Conversion, vol. EC-1, no. 1, pp. 39-46, March 1986.

[4] E. L. Owen, Discussion of "Report of large motor reliability survey of industrial and commercial installations—Part 1," IEEE Trans. Ind. Appl., vol. IA-21, no. 4, pp. 863-864, July/Aug. 1985.

### Discussion

**Richard Bloss** *(Independent Consultant, #5462 Banbury Drive, Cleveland, OH 44139, formerly with Booz, Allen & Hamilton):* I applaud the IEEE Motor Reliability Working Group for their efforts to build a better understanding of the factors that influence large motor reliability. I would like to add that my remarks here are my own and not those of the Electric Power Research Institute, the General Electric Company, the prime contractor for the EPRI study, or of Booz, Allen & Hamilton, the subcontractor for the survey phase.

There are certain differences in the focus of the two studies that are important to understand. The EPRI study was looking at power generation plant applications. The IEEE was looking at a much broader commercial and industrial application base. To capitalize on the commonality of applications, the EPRI study focused on possible effects of applications as well as basic motor failure modes. The EPRI study permits conclusions to be drawn across similar applications.

The General Electric Company representatives may have already drawn what may be the most significant conclusion to the EPRI study in earlier remarks they made relating to the first part of the IEEE study. That conclusion is that the most significant variable in motor reliability in the EPRI study was "who was the owner." My personal analysis of the findings leads me to draw the conclusion that those utilities which had developed their own motor specifications over and beyond the industry standards had the best reliability history.

As a result of the larger sample in the EPRI study and the greater focus on a limited range of applications, more conclusions can be drawn relating to applications. As an example, in the EPRI study a problem was identified relating to the failure of Weatherproof II enclosures to protect motors in outdoor installations in coastal regions affected by severe weather. In another case, a pattern of motor misapplication in purchased subsystems was identified. Data from a number of owners of a particular subsystem served to pinpoint the use of motors designed for horizontal use, with adequate axial thrust capacity, in vertical applications. The subsystem supplier had failed to understand the problem of lubrication of the bearings. Owners who had researched the problem of bearing failure were installing their own redesigned lube system while others who were unaware of the root cause were continuing to repair the same bearing failure over and over.

It does appear from the EPRI study that customer-generated specifications can impart a favorable impact on motor reliability. The IEEE may want to pursue, in conjunction with the EPRI and others, a further study of what specific factors in customer-generated motor specifications have this positive effect on motor reliability.

The payoff is clear. In the EPRI study the average cost per year of motor failures was identified as $300 000 per power generating unit. The "best" owners had much lower motor failure costs, approaching *zero* cost. The average unit had just 40 motors. The average cost per motor per year for failures was about $7500, *plus* the cost to repair the motor!

I feel the IEEE Working Group must enlist the help of major customers of large motors to develop improved specifications that will reduce motor failures.

Manuscript released for publication October 9, 1986.

**C. R. Heising and Pat O'Donnell:** The Discussion by Mr. Bloss presents some additional views and comparisons of the EPRI and IEEE surveys of the reliability of large motors.

A notable difference in the published results from the IEEE survey is the omission of conclusions except for some obvious conclusions from the data. This omission is deliberate and may possibly lead to a false impression that the IEEE results are not conducive to definite conclusions. We believe the results present facts as accurate as can possibly be obtained in a survey conducted by mail. The IEEE survey was successful in obtaining data covering causes of failures, and in some cases this was related to pertinent design factors.

A major difference in the surveys by the EPRI and the IEEE is the population base of each. The EPRI results, based on a large population base, appear to be more complete and contain more detail in some specific areas such as the failed part and the application of the motor. The IEEE survey results are based upon a lesser population, but are more complete on the causes of the failures and the effect of maintenance. The cause data included failure initiating cause, failure contributing cause, and failure responsibility.

Copyright © 1998 IEEE. All rights reserved.

Mr. Bloss's comments about the effect that customer-generated specifications can have on improving the reliability of motors are very pertinent. He suggests that the IEEE may want to pursue this subject further and identify some of the most pertinent factors that could be specified in order to improve the reliability of motors. The IEEE-IAS Power Systems Reliability Subcommittee will consider this matter further.

Accurate and well-engineered specifications are certainly found desirable by most users and manufacturers. The inability to provide such specifications may often be caused by insufficient experience and expertise, and this may lead to poor reliability. The IEEE survey results are intended to aid this cause by revealing what is actually happening in the industry, thus allowing improved standards and specifications. These results reveal existing reliability with existing specifications. Mr. Bloss reports from his experience on the EPRI study that good specifications can coincide with good reliability.

The data from the IEEE motor reliability survey will be included in the next revision to IEEE Standard No. 493 (Gold Book), "Recommended Practice for Design of Reliable Industrial and Commercial Power Systems." This recommended practice standard and its future revisions contain much of the data collected in the IEEE equipment reliability surveys of industrial and commercial installations.

Manuscript released for publication October 9, 1986.

**Pat O'Donnell** (S'64-M'68-SM'80) was born in El Paso, TX in 1942 and received the B.S.E.E. degree from Texas Western College (now University of Texas at El Paso) in 1965.

After brief employment with the Schlumberger Well Surveying Corporation, he joined the El Paso Natural Gas Company in 1966 and is presently a Consultant Electrical Engineer in the main office, Engineering Department, in El Paso.

He is presently active in the Industrial and Commercial Power Systems Department of the IEEE Industry Applications Society and serves as Secretary of the department. He is a Past Chairman of the Power System Technologies Committee and within the Power Systems Engineering Committee he is presently Chairman of the Orange Book (IEEE Std. 446) Working Group in the Emergency and Standby Power Systems Subcommittee, Chairman of the Motor Reliability Working Group in the Power Systems Reliability Subcommittee, and a member of the Power Systems Analysis Subcommittee. He is a Registered Professional Engineer in the States of Texas and New Mexico.



Copyright © 1998 IEEE. All rights reserved.

# Appendix I
# Reliability Study of Cable, Terminations, and Splices by Electric Utilities in the Northwest

By
W. F. Braun
*IEEE Transactions on Industry Applications*
Jan./Feb. 1987, pp. 144-153

Copyright © 1998 IEEE. All rights reserved.

This page is intentionally blank

# Reliability Study of Cable, Terminations, and Splices by Electric Utilities in the Northwest

WILLIAM F. BRAUN, MEMBER, IEEE

*Abstract*—**The results for cable, terminations, and splice reliability are summarized from a reliability report prepared annually by the Northwest Electric Light and Power Association (NELPA). Failure rates are given for primary cable, secondary cable, plug-in elbow connectors, primary splices and loadbreak junctions, pole top terminators, and secondary connections. Pertinent factors that affect the failure rates are identified.**

## INTRODUCTION

FOR THE PAST 18 years the Northwest Underground Distribution Committee[1] of the Northwest Electric Light and Power Association (NELPA) has prepared an annual report titled "URD equipment and materials reliability in the Northwest" [1].

Of particular interest to the IEEE Power Systems Reliability Subcommittee on Industrial and Commercial Power Systems is the portion of the report pertaining to cables, terminations, splices, and connections, since similar equipment is often used on industrial or commercial power systems.

The data in the NELPA report appears to be more complete and represents a much larger sample size than the data from the IEEE reliability survey of industrial plants [2] that was published in 1973–1974 and incorporated into the present ANSI/IEEE Standard No. 493-1980 [3]. The standard is being revised and updated in 1986. This paper will sumarize the NELPA report with the intent of using it as a source for the 1986 revision of ANSI/IEEE Standard No. 493.

## BACKGROUND

NELPA companies serve most of the Northwest areas of the United States. Because the geographical makeup of this area consists of some very wet areas, some very dry areas, some very hot areas, and some very cold areas, the data from the report should be valuable for evaluating URD equipment for use around the country, particularly for such items as corrosion resistance and insulation failure.

NELPA consists of the following member companies.

Paper ICPSD 86-14, approved by the Power Systems Engineering Committee of the IEEE Industry Applications Society for presentation at the 1986 Industrial and Commercial Power Systems Technical Conference, Cleveland, OH, May 5-8. Manuscript released for publication September 9, 1986.

W. F. Braun is with the Owens-Corning Fiberglas Corporation, Fiberglas Tower SG14, Toledo, OH 43659.

IEEE Log Number 8612031.

[1] Kenneth W. Prier of Portland General Electric Company was Chairman of the Northwest Underground Distribution Committee in 1984, when Report No. 17 was issued. Richard M. Snell of Montana Power Company is the present Chairman.

TABLE I
CABLE FAILURE RATES—ALL VOLTAGE CLASSES
(Failures per 100 Conductor Miles)

| | | | |
|---|---|---|---|
| 1969 | 0.67 | 1977 | 0.98 |
| 1970 | 1.11 | 1978 | 1.47 |
| 1971 | 0.73 | 1979 | 1.82 |
| 1972 | 0.91 | 1980 | 1.68 |
| 1973 | 1.00 | 1981 | 2.55 |
| 1974 | 1.03 | 1982 | 2.51 |
| 1975 | 0.89 | 1983 | 2.27 |
| 1976 | 1.10 | | |

Idaho Power Company
Montana Power Company
Pacific Power & Light Company
Portland General Electric Company
Puget Sound Power & Light Company
Utah Power & Light Company
Washington Water Power Company

## FAILURE DATA REPORTING

The report is only concerned with natural failures of equipment or materials. All failures caused by abnormal external means, such as through dig-ins or damage prior to installation, are not intended to be included in the data. In the cases where the cause of a failure could not be determined, the cause of the failure is assumed and reported in that way.

The member utilities are continuously improving their efforts to accumulate basic data. However, there are still problems with field people not reporting the material failures. All failure rates in this report should be considered on the low side.

## PRIMARY CABLE

Table I lists the failure record for all voltage classes (15 kV, 25 kV, and 35 kV) and insulation types of primary cable used on the systems.

In general the failure record is excellent, although high molecular weight polyethylene (HMWPE) insulated cable is failing at a much greater rate than crosslinked polyethylene (XLPE). (See Tables IIIA and IIIB for complete data.)

The failure rates for the last few years are high because one utility has just started reporting failures and they have been having problems with 175-mil 15-kV cable.

A comparison was also made between 15-kV HMWPE and 15-kV XLPE cable for the last ten years. (See Table II.)

Copyright © 1998 IEEE. All rights reserved.

TABLE II
15-kV CLASS CABLE
(Failures per 100 Conductor Miles of Cable)

| Failure Year | 175-mil HMWPE | 220-mil HMWPE | 175-mil XLPE | 220-mil XLPE |
|---|---|---|---|---|
| 1973 | 0.90 | 1.40 | 0.27 | 0.0 |
| 1971 | 0.41 | 1.41 | 0.53 | 0.56 |
| 1975 | 0.72 | 1.51 | 0.33 | 0.0 |
| 1976 | 1.19 | 1.28 | 0.47 | 1.72 |
| 1977 | 1.25 | 1.04 | 0.39 | 0.0 |
| 1978 | 2.07 | 0.69 | 1.06 | 0.08 |
| 1979 | 2.67 | 0.90 | 0.68 | 0.12 |
| 1980 | 3.42 | 0.65 | 0.03 | 0.0 |
| 1981 | 5.38 | 0.95 | 0.10 | 0.05 |
| 1982 | 4.77 | 1.69 | 0.07 | 0.0 |
| 1983 | 4.40 | 1.73 | 0.53 | 0.0 |

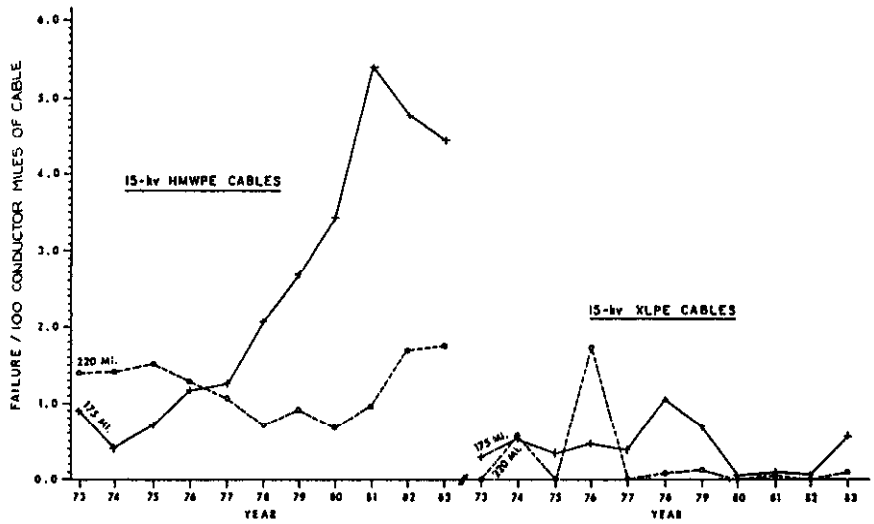


Fig. 1. Failure rates of 15-kV URD cables.

HMWPE cable seems to be failing at a much higher rate than XLPE cable. These failures seem to be related to treeing problems, which break down the insulation material. (See Fig. 1 for a plot of the data.)

Some member utilities have started to purchase tree-retardant insulation material. The usage has been limited and no failures have been reported.

In addition, 175-mil thickness insulation seems to have a much higher failure rate than 220-mil insulation. This is apparently due to the larger electrical stress capability of 220-mil insulation.

### Secondary Cables

The failure rate for secondary low-voltage cables (600 V and below) has remained fairly constant for the last two years. The failure rates since 1969 are as follows.

| | | |
|---|---|---|
| 1969 | 1.5 | failures per 100 conductor miles |
| 1970 | 1.25 | failures per 100 conductor miles |
| 1971 | 0.74 | failures per 100 conductor miles |
| 1972 | 0.62 | failures per 100 conductor miles |
| 1973 | 0.35 | failures per 100 conductor miles |
| 1974 | 0.50 | failures per 100 conductor miles |
| 1975 | 0.39 | failures per 100 conductor miles |
| 1976 | 0.53 | failures per 100 conductor miles |
| 1977 | 0.73 | failures per 100 conductor miles |
| 1978 | 0.71 | failures per 100 conductor miles |
| 1979 | 0.73 | failures per 100 conductor miles |
| 1980 | 0.48 | failures per 100 conductor miles |
| 1981 | 0.80 | failures per 100 conductor miles |
| 1982 | 0.70 | failures per 100 conductor miles |
| 1983 | 0.78 | failures per 100 conductor miles |

Failures of this cable seem to be related mostly to mechanical-type damage occurring during or after installation. Corrosion problems due to moisture do not seem to be a problem. (See Table IV for complete data.)

### Plug-In Elbow Connectors

The failure rate for 15-kV, 25-kV, and 35-kV loadbreak elbows of 0.41 failures per 1000 units (unit defined as one



Copyright © 1998 IEEE. All rights reserved.

TABLE IIIA
PRIMARY CABLE—15 kV

| | Type | Company | Miles[a] Installed | Failures This Year | Failures to Date | Average Life Before Failure | Neutral Corrosion |
|---|---|---|---|---|---|---|---|
| (A) | HMWPE 175 mil, 15 kV | A | 18 | 0 | 23 | Unknown | |
| | | B | 1170 | 34 | 118 | 7–8 yrs | |
| | | C | 1388 | 97 | 412 | | |
| | | E | 3161 | 86 | 545 | 13 yrs | 8 |
| | | G | 1085 | 83 | 529 | 12 yrs | 10 |
| | Total | | 6822 | 300 | 1627 | | |
| (B) | HMWPE 175 mil, 15 kV tree retardant | C | 504 | 0 | 0 | | |
| | | E | 1106 | 0 | 0 | | |
| | Total | | 1610 | 0 | 0 | | |
| (C) | HMWPE 220 mil, 15 kV | A | 1 | 0 | 0 | 12 yrs | |
| | | C | 74 | 16 | 86 | Unknown | |
| | | D | 2373 | 31 | 255 | Not reported | |
| | | F | 488 | 3 | 6 | 20 yrs | |
| | Total | | 2896 | 50 | 351 | | |
| (D) | HMW-Poly 220 mil, 15 kV tree retardent | D | 60 | 0 | 0 | | |
| (E) | XLP 175 mil, 15 kV | A | 1960 | 21 | 117 | Unknown | |
| | | B | 150 | 0 | 0 | | |
| | | C | 615 | 0 | 0 | | |
| | | E | 1519 | 0 | 14 | | |
| | | G | 60 | 1 | 3 | | |
| | Total | | 4154 | 22 | 134 | | |
| (F) | XLP 175 mil, 15 kV tree retardant | E | 318 | 0 | 0 | | |
| (G) | XLP 175 mil, 15 kV tree retardant with insulated jacket | E | 90 | 0 | 0 | | |
| (H) | XLP 175 mil jacket, 15 kV | G | 149 | 0 | 0 | | |
| | Total | | 149 | 0 | 0 | | |
| (I) | XLP 220 mil, 15 kV | C | 1 | 0 | 0 | | |
| | | D | 2417 | 0 | 10 | Not reported | |
| | | F | [b] | [b] | [b] | | |
| | Total | | 2418 | 0 | 10 | | |
| (J) | Butyl-neoprene, 15 kV | A | 1 | 1 | 1 | | |
| | | D | 10 | 0 | 1 | | |
| | | E | 79 | 2 | 15 | 21 yrs | |
| | Total | | 90 | 3 | 17 | | |
| (K) | EPR 175 mil, 15 kV | A | 3 | 0 | 4 | | |
| GRAND TOTAL | | | 18 610 | 375 | 2143 | | |
| LAST YEAR'S GRAND TOTAL | | | 17 751 | 376 | 1768 | | |

[a] Conductor miles (*not* circuit miles).
[b] Accurate data not available.
(Data from NUDC Report No. 17, October 8, 1984.)

Copyright © 1998 IEEE. All rights reserved.

TABLE IIIB
PRIMARY CABLE—25 AND 35 kV

| | Type | Company | Miles[a] Installed | Failures This Year | Failures to Date | Average Life Before Failure | Neutral Corrosion |
|---|---|---|---|---|---|---|---|
| (A) | HMWP 260 mil, 25 kV | G | 125 | 0 | 8 | | |
| (B) | HMWP 260 mil, 25 kV | B | 80 | 8 | 15 | 8–10 yrs | |
| (C) | HMWP 260 mil, 25 kV | C | 930 | 75 | 432 | | |
| (D) | HMWP 295 mil, 25 kV | C | 108 | 26 | 67 | | |
| (E) | HMWP 280 mil, 25 kV | A | 2 | 0 | 55 | 11 yrs | |
| | Total | | 1245 | 109 | 577 | | |
| (F) | HMWP 260 mil, 25 kV tree retardant | C | 348 | 0 | 0 | | |
| (G) | XLP 260 mil, 25 kV | B | 11 | 0 | 0 | | |
| (H) | XLP 260 mil, 25 kV | C | 409 | 0 | 4 | | |
| (I) | XLP 295 mil, 25 kV | F | [b] | [b] | [b] | | |
| | Total | | 420 | 0 | 4 | | |
| (J) | XLP 260 mil, 25 kV with jacket | B | 326 | 0 | 0 | | |
| (K) | EP 295 mil, 25 kV | A | 5 | 0 | 2 | | |
| (L) | HMWP 345 mil, 35 kV | C | 74 | 0 | 22 | | |
| (M) | HMWP 345 mil, 35 kV tree retardant | C | 31 | 0 | 0 | | |
| (N) | HMWP 345 mil, 35 kV tree retardant | E | 98 | 0 | 0 | | |
| | Total | | 129 | 0 | 0 | | |
| (O) | XLP 280 mil, 35 kV | A | 10 | 0 | 2 | | |
| (P) | XLP 345 mil, 35 kV | A | 102 | 1 | 2 | 2 yrs | |
| (Q) | XLP 345 mil, 35 kV | C | 34 | 0 | 0 | | |
| (R) | XLPE 345 mil, 35 kV | E | 29 | 0 | 0 | | |
| (S) | XLPE 345 mil, 35 kV | G | 5 | 0 | 0 | | |
| | Total | | 180 | 1 | 4 | | |
| (T) | XLP 345 mil, 35 kV tree retardant | E | 48 | 0 | 0 | | |
| (U) | XLP 345 mil, 35 kV tree retardant with insulated jacket | E | 17 | 0 | 0 | | |
| GRAND TOTAL | | | 2792 | 110 | 609 | | |
| LAST YEAR'S GRAND TOTAL | | | 2251 | 127 | 498 | | |

[a] Conductor miles (*not* circuit miles).
[b] Accurate data not available.
(Data is from NUDC Report No. 17, October 8, 1984).



Copyright © 1998 IEEE. All rights reserved.

TABLE IV
LOW-VOLTAGE CABLE

| Type Insulation | Company | Thickness | Miles[a] Installed | Failures This Year | Failures to Date | Average Life Before Failure | Neutral Corrosion |
|---|---|---|---|---|---|---|---|
| (A) Poly | C | | 0 | 0 | 0 | | |
| | D | (Sodium) | 12 | 0 | 4[c] | 2 1/2 yrs | |
| | E | | 0 | 0 | 0 | | |
| Total | | | 12 | 0 | 4 | | |
| (B) XLPE | A | 70–110 mil | 2983 | 165 | 543 | Unknown | |
| | B | 70–110 mil | 1300 | 1 | 21 | | |
| | C | 60–110 mil | 11 295 | 87 | 914 | Unknown[b] | All neutral |
| | D | 80–95 mil | 8128 | 5 | 89 | | |
| | E | Min. IPCEA | 5520 | 5 | 47 | (Failures[b] starting with 1976 data) | |
| | G | 60–110 mil | 2096 | Unknown | Unknown | | |
| Total | | | 31 322 | 263 | 1614 | | |
| (C) Abrasion-resistant XLPE | E | | 9 | 0 | 0 | | |
| | G | | 0.2 | 0 | 0 | | |
| Total | | | 9.2 | 0 | 0 | | |
| (D) Abrasion-resistant HMWP | A | | 46 | 0 | 0 | | |
| | E | | 697 | 0 | 0 | | |
| Total | | | 743 | 0 | 0 | | |
| (E) PVC | A | 80 mil | 10 | 0 | 1 | | |
| | C | | 0 | 0 | 0 | | |
| | D | | 7.1 | 0 | 0 | | |
| | E | | 0 | 0 | 0 | | |
| Total | | | 17.1 | 0 | 1 | | |
| (F) Rubber neoprene | C | | 195 | 0 | 0 | | |
| | D | 65 & 65 mil | 1162 | 0 | 11 | | |
| | E | 5/64 in | 99 | 0 | 3 | | |
| Total | | | 1456 | 0 | 14 | | |
| GRAND TOTAL | | | 33 550.1 | 263 | 1633 | | |
| LAST YEAR'S GRAND TOTAL | | | 31 978.9 | 225 | 1370 | | |

[a] Insulated conductor miles (*not* circuit miles).
[b] Some of these failures could have been rubber neoprene, but no record is available as to which type cable failed. More failures are being reported due to a computer-managed reporting system.
[c] Cable insulation failed due to mechanical stress placed on it by the design of the connector. (A stainless-steel hose clamp around the insulation makes a quick fix.)
(Data is from NUDC Report No. 17, October 8, 1984.)

single-phase terminator) has been fairly constant over the last four years. Many of the recent problems were due either to molding problems of one manufacturer, cross-threading of connectors, or bad compression joints. These failures include units that were improperly installed, which is a significant number. The failures also include units that were replaced during maintenance due to problems such as visible tracking overheating, etc. (See Table V for complete data.)

### Primary Connections

This is the fifth year for the study of primary cable splices and primary load break functions. Since the data is relatively new the results should be used carefully.

The failure rate for 15-kV splices was 2.1 failures per 1000 units (unit defined as one single-phase splice), compared to last year's 2.4 failures; the failure rate for 15-kV primary junctions was 1.0 failures per 1000 units, compared to last year's 1.3 failures. Splice failures over the last couple of years have been due mostly to the molding problems experienced by one manufacturer and to improper installation by line crews. (See Table VI for completed data.)

### Pole Top Terminators

The outstanding performer for all voltage classes (15 kV, 25 kV, and 35 kV) is the molded rubber terminator. The failure rate is 0.06 per 1000 units (unit defined as one single-phase

Copyright © 1998 IEEE. All rights reserved.

TABLE V
PLUG IN PRIMARY TERMINATORS (ELBOWS)

| | Type | Company | Total Number on System | Failures This Year | Failures to Date | Average Life Before Failure |
|---|---|---|---|---|---|---|
| (A) | Non-LB rubber, 15 kV | A | 65 | 0 | 0 | |
| | | C | 1628 | 0 | 3 | |
| | | D | 2302 | 0 | 41 | |
| | | E | 6440 | 0 | 51 | |
| | | G | 200 | 0 | 0 | Unknown |
| | Total | | 10 635 | 0 | 100 | |
| (B) | Non-LP rubber, 600 A-15 kV | A | 707 | 0 | 0 | |
| | | C | 0 | 0 | 0 | |
| | | D | 322 | 0 | 2 | |
| | | E | 1972 | 0 | 9 | |
| | | G | 25 | 0 | 0 | |
| | Total | | 3026 | 0 | 11 | |
| (C) | Non-LB rubber, 600 A-25 kV | C | 33 | 0 | 0 | |
| | | E | 0 | 0 | 0 | |
| | | F | * | * | * | |
| | Total | | 33 | 0 | 0 | |
| (D) | Non-LB rubber, 600 A-35 kV | E | 30 | 0 | 0 | |
| | Total | | 30 | 0 | 0 | |
| (E) | Non-LB metal | A | 40 | 0 | 0 | |
| | | C | 15 | 0 | 1 | |
| | Total | | 55 | 0 | 1 | |
| (F) | LP rubber 15 kV | A | 31 138 | 18 | 168 | |
| | | B | 21 514 | 32 | 71 | |
| | | C | 40 997 | 27 | 231 | |
| | | D | 76 525 | 21 | 180 | |
| | | E | 160 506 | 44 | 370 | |
| | | F | * | * | * | |
| | | G | 24 179 | 2 | 15 | |
| | Total | | 354 859 | 144 | 1035 | |
| (G) | LB rubber, 25 kV | B | 797 | 4 | 19 | |
| | | C | 24 311 | 5 | 27 | |
| | | E | 0 | 0 | 0 | |
| | | F | * | * | * | |
| | | G | 565 | 0 | 4 | |
| | Total | | 25 673 | 9 | 50 | |
| (H) | LB rubber, 35 kV | A | 2465 | 0 | 2 | 1 yr |
| | | C | 2293 | 5 | 19 | |
| | | E | 730 | 0 | 0 | |
| | Total | | 5488 | 5 | 21 | |
| GRAND TOTAL | | | 399 799 | 158 | 1218 | |
| LAST YEAR'S GRAND TOTAL | | | 371 119 | 160 | 1060 | |

* Accurate data not available.
(Data is from NUDC Report No. 17, October 8, 1984.)


Copyright © 1998 IEEE. All rights reserved.

TABLE VI
PRIMARY CONNECTIONS

| Type | Company | Total Number on System | Failures This Year | Failures to Date | Average Life Before Failure |
|---|---|---|---|---|---|
| Primary splices—15 kV, molded rubber | A | 13 454 | 48 | 443 | 10 yrs |
| | B | 7484 | 68 | 149 | |
| | C | 17 624 | 6 | 15 | |
| | D | 21 481 | 4 | 35 | |
| | E | 18 990 | 65 | 389 | |
| | G | 11 813 | 3 | 25 | |
| Total | | 90 846 | 194 | 1056 | |
| Primary splices—25 kV, molded rubber | B | 309 | 3 | 5 | |
| | C | 11 332 | 1 | 3 | |
| | G | 520 | 0 | 4 | |
| Total | | 12 161 | 4 | 12 | |
| Primary splices—35 kV, molded rubber | A | 711 | 1 | 6 | |
| | C | 1057 | 0 | 16 | |
| | E | 437 | 0 | 0 | |
| | G | 32 | 0 | 0 | |
| Total | | 2237 | 1 | 22 | |
| GRAND TOTAL | | 105 244 | 199 | 1090 | |
| LAST YEAR'S GRAND TOTAL | | 94 281 | 203 | 891 | |
| Primary loadbreak junctions (lateral taps)—15 kV | A | 3474 | 13 | 138 | 4–8 years |
| | B | 3224 | 18 | 30 | |
| | C | 7321 | 3 | 9 | |
| | D | 8742 | 4 | 31 | |
| | E | 30 555 | 19 | 213 | |
| | G | 2103 | 0 | 2 | |
| Total | | 55 419 | 57 | 423 | |
| Primary loadbreak junctions (lateral taps)—25 kV | B | 42 | 1 | 4 | |
| | C | 3587 | 3 | 7 | |
| | G | 16 | 0 | 0 | |
| Total | | 3645 | 4 | 11 | |
| Primary loadbreak junctions (lateral taps)—35 kV | C | 306 | 1 | 2 | |
| | E | 261 | 0 | 0 | |
| Total | | 567 | 1 | 2 | |
| GRAND TOTAL | | 59 631 | 62 | 436 | |
| LAST YEAR'S GRAND TOTAL | | 55 195 | 71 | 374 | |

Note: Data on taped primary splices has been discontinued due to lack of data.
(Data from NUDC Report No. 17, October 8, 1984.)

terminator). The porcelain elastomeric type has a rate of 0.43 per 1000 units. Overall the record for these devices is excellent. (See Table VII for complete data.)

### SECONDARY CONNECTIONS

This is the sixth year of evaluating the different types of secondary connections 600 V and below made by the member utilities. This data should be used carefully due to the difficulty in tabulating failures from previous years. The section on taped-insulated connections has been discontinued since the data is not dependable. Even though the data is new, the numbers on heat-shrink connections appear to be particularly interesting due to the failure rate of 0.002 per 1000 units (unit defined as one single-phase connection) for 1983 on 513 280 units installed. This compares with the failure rate of 0.00 per 1000 units for 1982. The failure rate for the molded

Copyright © 1998 IEEE. All rights reserved.

TABLE VII
POLE TOP TERMINATORS

| | Type | Company | Total Number on System | Failures This Year | Failures to Date | Average Life Before Failure |
|---|---|---|---|---|---|---|
| (A) | Porcelain compound | A | 192 | 0 | 7 | 8 yrs |
| | | C | 125 | 0 | 3 | |
| | | D | 115 | 0 | 0 | |
| | | E | 75 | 0 | 3 | 17 months |
| | Total | | 507 | 0 | 13 | |
| (B) | Porcelain epoxy | E | 125 | 0 | 3 | |
| (C) | Porcelain elastomer—15 kV | B | Unknown | 1 | 10 | |
| | | C | 1631 | 2 | 20 | |
| | | D | 2732 | 0 | 2 | |
| | | E | 25 522 | 11 | 230 | Unknown |
| | Total | | 37 126 | 16 | 271 | |
| (D) | Porcelain elastomer—25 kV | C | 1320 | 2 | 12 | |
| | Total | | 1320 | 2 | 12 | |
| (E) | Porcelain elastomer—35 kV | A | 137 | 0 | 0 | |
| | | E | 448 | 0 | 0 | |
| | Total | | 585 | 0 | 0 | |
| (F) | Porcelain elastomeric compound 35 kV | C | 18 | 0 | 1 | |
| | | A | 37 | 0 | 0 | |
| | Total | | 55 | 0 | 1 | |
| (G) | Molded rubber—15 kV | A | 1840 | 0 | 1 | |
| | | B | 14 359 | 2 | 15 | |
| | | C | 17 861 | 2 | 34 | Unknown |
| | | D | 32 576 | 2 | 8 | 2 yrs |
| | | F | * | * | * | |
| | | G | 10 045 | 0 | 12 | |
| | Total | | 76 681 | 6 | 70 | |
| (H) | Molded rubber—25 kV | B | 600 | 0 | 0 | |
| | | C | 12 064 | 0 | 7 | |
| | | F | * | * | * | |
| | | G | 369 | 0 | 2 | |
| | Total | | 13 033 | 0 | 9 | |
| (I) | Molded rubber—35 kV | A | 1071 | 0 | 0 | |
| | | C | 972 | 0 | 4 | |
| | | G | 40 | 0 | 0 | |
| | Total | | 2083 | 0 | 4 | |
| (J) | Taped | A | 7* | 0 | 1 | |
| | | C | 0 | 0 | 0 | |
| | | D | 200 | 0 | 21 | |
| | Total | | 229 | 0 | 22 | |
| (K) | Scotch 83A3 | A | 227 | 0 | 23 | |
| | | F | | | | |
| | Total | | 227 | 0 | 23 | |
| (L) | Heat shrink—15 kV | E | 9397 | 0 | 4 | |
| | | C | 7 | 0 | 0 | |
| | Total | | 9404 | 0 | 4 | |



Copyright © 1998 IEEE. All rights reserved.

TABLE VII
(*Continued*)

| | Type | Company | Total Number on System | Failures This Year | Failures to Date | Average Life Before Failure |
|---|---|---|---|---|---|---|
| (M) | Heat shrink—25 kV | C | 80 | 0 | 1 | |
| | Total | | 80 | 0 | 1 | |
| (N) | Heat shrink—35 kV | E | 363 | 0 | 0 | |
| | | C | 21 | 1 | 3 | |
| | Total | | 384 | 1 | 3 | |
| GRAND TOTAL | | | 141 839 | 25 | 436 | |
| LAST YEAR'S GRAND TOTAL | | | 133 271 | 21 | 411 | |

[a] Accurate data not available.
(Data from NUDC Report No. 17, October 8, 1984.)

TABLE VIII
SECONDARY CONNECTIONS

| | Type | Company | Total Number on System | Failures This Year | Failures to Date | Average Life Before Failure |
|---|---|---|---|---|---|---|
| (A) | Molded rubber/ plastic insulated connections | A | 53 162 | 5 | 36 | |
| | | B | — | — | — | |
| | | C | 1093 | 0 | 2 | |
| | | D | 292 399 | 6 | 242 | |
| | | E | 155 284 | 2 | 171 | |
| | | F | [a] | [a] | [a] | |
| | | G | 44 245 | 0 | 10 | |
| | Total | | 546 183 | 13 | 461 | |
| (B) | Heat shrink connections | A | 47 987 | 1 | 11 | 1 yr |
| | | B | — | — | — | |
| | | C | 147 184 | Unknown | Unknown | |
| | | D | 53 100 | 0 | 1 | |
| | | E | 265 009 | 0 | 6 | |
| | | F | [a] | [a] | [a] | |
| | Total | | 513 280 | 1 | 18 | |
| GRAND TOTAL | | | 1 059 463 | 14 | 479 | |
| LAST YEAR'S GRAND TOTAL | | | 965 121 | 13 | 465 | |

[a] Accurate data not available.
(Data from NUDC Report No. 17, October 8, 1984.)

rubber-plastic units is 0.02 failures per 1000 units for 1983, which is the same as for 1982. (See Table VIII for data.)

## REFERENCES

[1] Northwest Underground Distribution Committee of the Northwest Electric Light and Power Association (NELPA), "URD equipment and materials reliability in the Northwest," no. 17, October 8, 1984.

[2] IEEE Committee Report, "Report on reliability survey of industrial plants," published in six parts, *IEEE Trans. Ind. Appl.*, pp. 213-252, 456-476, 681, Mar./Apr., July/Aug., Sept./Oct. 1974. (Included as Appendices in [3].)

[3] ANSI/IEEE Standard No. 493-1980, "IEEE Recommended Practice for the Design of Reliable Industrial & Commercial Power Systems."

**William F. Braun** (M'76) received the B.S.E.E. degree from the University of Toledo in 1970.

He worked at the Ohio Power Company, Newark, OH, as an Engineer in the Transmission and Distribution Department from 1971 to 1973. Since 1973 he has been employed at the Owens-Corning Fiberglas Corporation, Toledo, OH. Presently he is working as a Senior Electrical Engineer in the Power Systems Section of Corporate Electrical Engineering of Owens-Corning.

Mr. Braun is a member of IEEE/IAS Power Systems Reliability Subcommittee.

Copyright © 1998 IEEE. All rights reserved.

This page is intentionally blank

## Appendix J

# Summary of CIGRE 13.06 Working Group World Wide Reliability Data and Maintenance Cost Data on High Voltage Circuit Breakers Above 63 kV

By
C.R. Heising, A.L.J. Janssen, W. Lanz, E. Colombo, E.N. Dialynaas

IEEE-IAS Industrial Application Conference
October 2-5, 1994, Denver, Colorado.

Reprint from IEEE Conference Record
94CH34520, pp. 2226-2234.

Copyright © 1998 IEEE. All rights reserved.

This page is intentionally blank

# SUMMARY OF CIGRE 13.06 WORKING GROUP WORLD WIDE RELIABILITY DATA AND MAINTENANCE COST DATA ON HIGH VOLTAGE CIRCUIT BREAKERS ABOVE 63 kV

C. R. Heising, U. S. A.
A. L. J. Janssen, Netherlands
W. Lanz, Switzerland
E. Colombo, Italy
E. N. Dialynas, Greece

ABSTRACT

A summary is given of the most significant reliability data and maintenance cost data from the two CIGRE 13.06 Working Group world wide reliability surveys of the reliability of high voltage circuit breakers 63 kV and above. The first enquiry covered the years 1974 thru 1977 and included all interrupting technologies. The second enquiry covered the years 1988 thru 1991 and only included single pressure SF6 breakers.

A description is given of the scope and objectives of the CIGRE 13.06 Working Group. A brief description is given of some of the highlights from their studies.

## INTRODUCTION

CIGRE 13.06 Working Group carried world wide reliability studies on high voltage circuit breakers during the fifteen year period 1971 through 1985. This included making the First International Enquiry on circuit breaker failures and defects in service. Studies were also made on new testing and maintenance methods for improving the reliability of high voltage circuit breakers. This work is reported in three CIGRE Study Committee No. 13 final reports [1][2][3]. Some of the CIGRE 13.06 WG recommendations have resulted in changes in International Standards for high voltage circuit breakers.

## SCOPE AND OBJECTIVES OF NEW CIGRE 13.06 WG

In 1986 a new CIGRE 13.06 Working Group was set up on "Reliability of High Voltage Circuit Breakers" in order to obtain detailed information on circuit breaker performance in service as well as possible measures to improve the reliability and to reduce the maintenance costs. Two major tasks were undertaken:

1. Conduct a Second International Enquiry on the in service reliability of SF6 single pressure high-voltage circuit breakers with rated voltages 72.5 kV and above.

2. Study the parameters for permanent supervision in service as well as relevant diagnostic methods.

The results of the Second International Enquiry on circuit breaker failures and defects in service show the change in reliability since the First Enquiry. Monitoring and diagnostic methods aim to improve the reliability of operation and contribute to reducing the cost of maintenance. Studies on monitoring and diagnostic methods include all circuit breaker technologies because there is interest for both new and older circuit breakers.

Four papers have been published during 1992 to 1994 on the results of these studies[4][5][6][7]. In addition,a Technical Brochure has been published [8] that gives extensive details on the reliability of high voltage circuit breakers above 63 kV and the changes in reliability that have occured during the fourteen year interval between the First and Second International Enquiries.

## CIRCUIT BREAKER RELIABILITY DEFINITIONS USED IN TWO INTERNATIONAL ENQUIRIES

The CIGRE 13.06 WG wrote circuit breaker reliability definitions in 1971 for "failure," "major failure," "minor failure," and "defect." These definitions were used in both the First and Second International Enquiries and are given in Table 1. Thus world wide reliability definitions have existed for several years for high voltage circuit breakers and are now included in technical report IEC 1208 (1992) "Guide for High-Voltage Alternating Current Circuit Breaker Maintenance" by TC17 on Switchgear and Controlgear. It can be seen that the term "circuit breaker major failure" is equivalent to what system planning people would call a "forced outage."

The term "circuit breaker downtime" was clearly defined in the Second International Enquiry as "time from discovery of the failure until the breaker is returned to service, exclude deliberate delays." In the First International Enquiry "circuit breaker downtime" was calculated by adding two terms: (1) "time required to analyse the failure or defect, repair and return the circuit breaker to service, exlude deliberate delays," plus (2) "time required to get to site and obtain spare parts, exclude deliberate delays." This change in definition of "circuit breaker downtime" was made in the Second Enquiry because it was believed that some respondents in the First Enquiry may have misinterpreted what was asked for. However, it should be noted that deliberate delays for repair of the circuit breaker have been excluded in both enquiries when calculating "circuit breaker downtime."

## RELIABILITY DATA FROM FIRST ENQUIRY

A total of 102 electric utilities from 22 countries submitted data on 20,000 circuit breakers above 63 kV. This included breakers

0-7803-1993-1/94 $4.00 © 1994 IEEE



Copyright © 1998 IEEE. All rights reserved.

of all technologies. Data were collected for the years 1974-77 on circuit breakers installed after January 1, 1964. This gave a total of 77,892 breakers-years of service during the four year period. This was a pioneering effort that required the development of: (1) reliability and maintenance definitions , (2) survey questionaire, and (3) the method of analysis of the data. This encouraged utilities to develop a failure reporting system. Countries submitting data were: Australia, Belgium, Brazil, Canada, Czechoslovakia, Denmark, Finland, France, Federal Republic ofGermany, Greece, Ireland, Italy, Japan, Morocco, Netherlands, New Zealand, Norway, Portugal,Spain, Sweden, United Kingdom, and Yugoslavia. The results from this First InternationalEnquiry were published in "Electra" [1].

The failure rate and downtime data are summarized in Table 2 with the data for major failure rate and minor failure rate shown separately. Average downtime data and the median downtime data are given for major failures.

RELIABILITY DATA FROM SECOND ENQUIRY

The enquiry includes the years 1988 thru 1991 and was limited to single pressure SF6 circuit breakers because most of the new breakers at these voltage levels now being purchased by electric utilities use this technology. The questionaire [8] [9] was revised to be simpler than for the First Enquiry.

Data were collected for 1988 thru 1991 from 132 utilities in 22 countries on about 18,000 circuit breakers applied at 63 kV & above placed in service after January 1, 1978. There were a total of 70,708 breaker-years of service during the four year period. Countries submitting data were: Australia, Austria, Belgium, Brazil, Canada, Czechoslovakia, Finland, France,Germany, Italy, Japan, Netherlands, New Zealand, Norway, Paraguay, Rumania, Sweden, Switzerland, United Kingdom, United States of America, Union of Soviet Socialist Republics, and Yugoslavia.

Table 3 shows the major and minor failure rates separately. Average downtime data and median downtime data are given for major failures.

The questionaire for the Second Enquiry contains the additional major failure mode "locking in open or closed position." A study of this "locking" data indicates that about 13% were found during a command to open, about 37% were found during a command to close, and 50% were found by an alarm during normal service.

ORIGIN,CAUSE, FAILURE MODES, OPERATING-CYCLES

Tables 4 and 5 show the major and minor failure modes for the two enquiries. Table 6 shows the origins of failures, and Table 7 shows the causes of failures.

Table 8 shows the estimated average number of operating-cycles per year per breaker from the two enquiries.

DATA FOR USE IN SUBSTATION AND SYSTEM RELIABILITY STUDIES

Data from Tables 2 and 3 from the First and Second Enquiries have been used respectively to calculate the data shown in Tables 9 and 10. In both cases the major failures that occured during a command to open or close have been separated out from those that occurred without a command to open or close; this has been used along with the operating-cycles per year data to calculate the reliability data that is given in Tables 9 and 10. This shows the average number of major failures per 10,000 open commands or close commands of: "does not open on command", "does not break the current", "does not close on command", "does not make the current." These final results in Table 10 from the Second Enquiry can be compared with Table 9 from the First Enquiry. A footnote in each table gives the data for the two failure modes: "closes without command" and "breakdown across open pole;" these failure rates are very low, but may have a serious consequence when they occur on a power system.

COMPARISON OF RELIABILITY DATA BETWEEN THE FIRST AND SECOND ENQUIRIES

The final results from the Second International Enquiry for 1988 thru 1991 show that modern single-pressure SF6 circuit breakers applied at 63 kV & above have a major failure rate that is only 43% as much as older technology circuit breakers reported in the First International Enquiry for 1974-1977. The largest improvement has occurred at voltages above 200kV where the reported major failure rates are less than one-third as much. The minor failure rates are 30% higher in the Second Enquiry.

It is believed that utilities do a better job of collecting failure data now than was done during the First Enquiry. The biggest improvement is believed to have occurred in the collection of data on minor failures.

The "estimated average number of operating-cycles per year per breaker" were 42 and 26.5 respectively from the Second and First International Enquiries. These values have an effect on the calculated probabilities of breaker major failures per operating command. The Second Enquiry calculated the average number of operating-cycles per year per breaker by weighting each breaker equally. This is a better method than used in the First Enquiry where each questionaire answer was weighted equally, and some answers contained many more breakers than other answers. It is not believed that there has been a significant change in the number of operating-cycles per year per breaker between the First and Second Enquiries. If 42 operating-cycles per year per breaker had been used to calculate the probabilities of breaker major failures per operating command for the First Enquiry, the probabilities shown in Table 9 would have been lower by a factor of 1.58.

Tables 10 and 9 can be compared to show the number of major failures per 10,000 cycles, where a cycle is one open command plus one close command. For all voltages combined the


Copyright © 1998 IEEE. All rights reserved.

Second Enquiry shows 0.829 versus 3.06 for the First Enquiry and is a factor of 3.7 lower. But 1.58 of this improvement is explained in the previous paragraph because of using an estimated average of 42 operating-cycles per year per breaker versus 26.5 from the First Enquiry; and 3.7 divided by 1.58 equals 2.33. Thus the number of major failures per 10,000 cycles has decreased by at least a factor of 2.33.

COMPARISON OF BREAKER DOWNTIME DATA PER MAJOR FAILURE BETWEEN THE FIRST & SECOND ENQUIRIES

The Second Enquiry had an average downtime of 94.6 hours per major failure versus 81.6 in the First Enquiry. But the median downtime was only 10.0 hours hours in the Second Enquiry versus 12.0 in the First Enquiry. Both enquiries show a highly skewed distribution where a small number of long downtimes result in the average being between about seven to nine times larger than the median value. Some people have questioned why the Second Enquiry had a longer downtime than the First Enquiry. A special detailed study has been made of the downtime data from the Second Enquiry. The increase in breaker downtime for SF6 single pressure breakers is primarily due to a much longer "time to obtain spare part." 64% of the 94.6 hours per failure of average breaker downtime for "all voltages combined" can be attributed to "time to obtain spare part." This would appear to be due to the policies of electric utilities on spare parts rather than the ability to repair the breaker. In 9% of the reported cases the "time to obtain spare part" was longer than the breaker downtime; this would indicate that the breaker was often placed back in service or was replaced before the spare part was obtained. The special study also found that there does not appear to be any significant difference in the breaker downtime between metal-enclosed and non-metal-enclosed SF6 breakers.

Data were not collected in the Second Enquiry on the breaker downtime for minor failures. This data were collected in the First Enquiry; and the average was 30.0 hours per minor failure with a median of 6.0.

SUBSTATION AND SYSTEM RELIABILITY STUDIES

The data in Tables 9 and 10 are a credible source of data based upon a large sample size. They can be used in substation and system reliability studies. Very few reliability studies use all of the breaker failure modes given in this data. The circuit breaker is the most difficult component to handle when making substation or system reliability studies because of the many different breaker functions and the associated failure modes.

$\lambda_s$ is the major failure rate without a command to operate. 63% of these failures for all voltages combined include the failure modes: alarm-locking in open or closed position, fails to carry the current, other requiring manual removal from service within 30 minutes. These might be assumed to be passive failures. The other 37% might be assumed to be active major failures (breakdown to earth, breakdown between poles, breakdown across open pole, closes without command, opens without command).

$c \cdot \lambda_c$ is the major failure rate during commands to operate, either for switching or to remove faults.

$\lambda_{c1} + \lambda_{c2}$ is the probability of not opening on command or not breaking the current during manual or automatic opening to perform switching or to remove a fault. This could be considered the breaker stuck closed probability.

$\lambda_{c3} + \lambda_{c4}$ is the probability of not closing on command or not making the current during manual or automatic closing or reclosing. This could be considered the breaker stuck open probability.

The dominant breaker failure mode is "does not close on command" and should not be neglected in substation or system reliability studies. This failure mode: (1) can prevent equipment from being switched into service when needed, (2) can cause a transient line outage to become a permanent outage, or (3) can cause an outage of a line or generator to be extended beyond the normal outage time.

The failure mode "closes without command" has a very low failure rate. But its occurence sometimes results in all of the back up protection being defeated and in some cases has been the cause of major blackouts. The failure mode "breakdown across pole" has the highest electrical failure rate of the main interrupter; and backup protection must operate to remove the fault. The failure rates of "closes without command" and "breakdown across open pole" are both very low; but they can be larger than the double contingency failure rates typically calculated for other component combinations in a substation reliability study.

COST OF SCHEDULED SERVICING OF OLDER TECHNOLOGY BREAKERS

Table 11 shows the cost of scheduled servicing of older technology breakers (minimum oil, air blast, SF6, bulk oil, etc) that was collected from the First International Enquiry [1] for the years 1974-1977. The costs are shown separately for the labor effort and for the spare parts consumed. The 10, 50, and 90 percentiles cost values are given along with the average cost value for each voltage category. The number of data points in each voltage category ranged from 69 to 138. It can be seen that there is a wide variation between the 10 and 90 percentiles cost values for the labor effort, typically as much as six to one or more. There is even a wider variation in the costs of the spare parts consumed. These cost values indicate that many users of high voltage circuit breakers may be doing more scheduled maintenance than needed. In some cases it might be possible to reduce the maintenance effort without the use of additional diagnostic techniques. In other cases it might be desirable to use additional diagnostic techniques in order to detect degradation of the most probable failure modes before they occur in service[4][5]. Table 11 gives data that can be used to assist in estimating the maximum cost savings that might be possible from using diagnostic techniques on older technology circuit breakers.



Copyright © 1998 IEEE. All rights reserved.

COST OF SCHEDULED OVERHAUL OF MODERN TECHNOLOGY BREAKERS

Table 12 shows the estimated cost of scheduled overhaul for single pressure SF6 breakers that has been collected during the four years (1988-1991) of the Second International Enquiry. The costs are shown separately for the labor effort and for the spare parts consumed for each voltage category along with the 10, 50, 90 percentile and average values. The number of data points in each voltage category ranged from 179 to 601. The data on the interval betweeen scheduled overhaul show that the 50 percentile value ranged from 6. to 8.5 years for the various voltage categories, but the 90 percentile value ranged from 12.0 to 15.0 years for all voltage categories. Most manufacturer's quote longer overhaul intervals than 8. years, and many utilities may not yet have sufficient confidence to fully exploit the longer overhaul interval possible with modern technology single pressure SF6 breakers. The variation in the labor costs ranged by a factor of six to one or more, and the spare parts consumed ranged by a factor or more than twenty to one; many of these utility estimates maybe based upon very limited experience with overhaul of single pressure SF6 breakers.

TIGHTNESS OF SF6 GAS SYSTEM

Table 6 shows that the tightness of the SF6 gas system was the origin of both minor and major failures in the Second Enquiry on SF6 single-pressure breakers. This included 39.6% of the minor failures and 7.2% of the major failures. The data in Table 5 show that 1297 minor failures were due to small SF6 leakage, and this was 39% of all minor failures. The minor failure rate for these 1297 failures is .018 per year per breaker.

There was a total of 33 major failures with the origin in the tightness of the SF6 gas system, and Table 13 shows the failure modes that resulted. 18 resulted in "locking in open or closed position" and 5 resulted in "opens without command." The major failure rate for these 33 failures is .00025 per year per breaker and is very low.

A density monitor is used to detect SF6 gas leaks, and this is the primary resson why most of the tightness failures are minor failures. However, 357 failures have also been reported of the density monitor.

Reliability improvements are needed in both the SF6 gas tightness system and in the gas density monitor.

FAILURE RATE OF METAL-ENCLOSED VERSUS NON-METAL ENCLOSED CIRCUIT BREAKERS

Table 13 shows a comparison of the failure rates from the Second Enquiry of metal-enclosed (ME) versus non-metal-enclosed circuit (NME) breakers for "all voltages combined, 100 kV and above." Most of the ME breakers are part of gas insulated stations.

The ME SF6 single-pressure breakers, 100 kV & above, have a lower failure rate than the NME breakers. But this difference can not be considered significant because it is mostly due to data from one country with a large population.

GENERAL CONCLUSIONS AND RECOMMENDATIONS

CIGRE 13.06 Working Group has collected and analysed world wide reliability data on high voltage circuit breakers applied on networks at 63 kV & above. These data are a large sample size and can be useful in substation and system reliability studies. Two important contributions to the knowledge of circuit breaker reliability are: (1) the failure mode data, and (2) the calculations of probabilities of not responding properly to an operating command to open or to close. The 1974-1977 data can be used for older technology circuit breakers, and the 1988-1991 data show the improvement that has been achieved with new technology single-pressure SF6 breakers. The major failure rate for modern SF6 single-pressure breakers is only about 43%as much as older technology breakers, and for voltages above 200 kV it is only one-third as much. Substation and system reliability studies should pay attention to this improvement. The lower major failure rate of circuit breakers may influence both the lay-out of primary plant and secondary systems.

The minor failure rate for modern SF6 breakers in the Second Enquiry is about 30% higher than for older technology breakers in the First Enquiry. Possible reasons for this may be: (1) better failure data collection by utilities and (2) increased number of alarms and (3) SF6 leakage problems.

The largest number of major failures on modern SF6 breakers occur on the operating mechanism and on the electrical auxiliary and control circuits. The largest number of minor failures occur from leaks on the SF6 gas system and from problems on the operating mechanism. Reliability improvements are needed on: (1) operating mechanism, (2) SF6 tightness, (3) electrical auxiliary & control circuits. The gas density monitor also needs improvement in reliability because the SF6 gas density is the most important parameter to monitor. The operating mechanism is also an important parameter to monitor.

Design and manufacture are the cause of about 50% of the failures of modern SF6 breakers.

Improved access to spare parts by utilities could significantly improve breaker availability by reducing the downtime after major failures.

The circuit breaker reliability definitions that were first written in 1971 are now accepted and used world wide. Thus it logical that these definitions become standards of the International Electrotechnical Comission (IEC) under Technical Committee No. 17 on Switchgear and Controlgear. It is recommened that the existing technical report IEC 1208 (1992) on "Guide for High-Voltage AC Circuit Breaker Maintenance" be upgraded to an IEC standard after the three trial period is completed.


Copyright © 1998 IEEE. All rights reserved.

TABLE 1 - CIRCUIT BREAKER RELIABILITY DEFINITIONS

1. FAILURE - Lack of performance by an item of its required functions.
Note: The occurenceofa failuredoes not necessarily imply the presence of a defect if the stress or the stresses are beyond those specified.

2. MAJOR FAILURE (OF A CIRCUIT-BREAKER) - Complete failure of a circuit-breaker which causes the lack of one or more of its fundamental functions.
Note: A majorfailure will result in an immediate change in the system operating condition; e. g., the backup protective equipment being required to remove the fault, or, will result in mandatory removal from service for non scheduled maintenance (intervention required within 30 minutes).

3. MINOR FAILURE (OF A CIRCUIT-BREAKER) - Failure of circuit-breaker other than major failure; or any failure, even complete, of a constructional element or a sub-assembly which does not cause a major failure of the circuit-breaker.

4. DEFECT - Imperfection in the state of an item (or inherent weakness) which can result in one or more failures of the item itself or of another item under the specific service or environmental or maintenance conditions for a stated period of time.

5. CIRCUIT-BREAKER DOWNTIME - Time from the discovery of the failure until the breaker is returned to service.

TABLE 2 - FAILURE RATES AND DOWNTIME DATA FOR HIGH VOLTAGE CIRCUIT BREAKERS ABOVE 63 kV
(from CIGRE 13-06 Working Group First International Enquiry, 1974-1977, All Interrupting Technologies)

| MAJOR FAILURE RATES | | | | | | *MINOR FAILURE RATES | | |
|---|---|---|---|---|---|---|---|---|
| Sample Size Breaker Years | Number of Major Failures | Major Failures per Breaker Year | *** Hours Downtime per Failure Average | Median | VOLTAGE kV | Sample Size Breaker Years | Number of Failures* | Failures* per Breaker Year |
| 77,892 | 1,231** | .0158 | 81.6 | 12.0 | All Voltages | 46,272 | 1,641 | .0355 |
| 33,877 | 138 | .0041 | 29.3 | 5.0 | 63 ≤ V <100 | 24,716 | 409 | .0165 |
| 26,743 | 437 | .0163 | 94.4 | 12.0 | 100 ≤ V <200 | 13,915 | 581 | .0417 |
| 9,939 | 257 | .0258 | 58.5 | 11.0 | 200 ≤ V <300 | 5,614 | 359 | .0639 |
| 6,224 | 283 | .0455 | 83.8 | 11.0 | 300 ≤ V <500 | 1,682 | 275 | .1635 |
| 1,109 | 116 | .1045 | 142.0 | 27.0 | 500 ≤ V | 345 | 17 | .0493 |

NOTES:
* Minor failures plus defects
** 45 of the 1,231 major failures had a fire and/or explosion
*** Downtime includes: time required to get to site, analyse the failure, obtain spare parts, repair and return circuit breaker to service. Deliberate delays have been excluded.

TABLE 3 - FAILURE RATES AND DOWNTIME DATA FOR SINGLE-PRESSURE HIGH-VOLTAGE CIRCUIT BREAKERS APPLIED ABOVE 63 kV
(Final Results from CIGRE 13-06 Working Group Second International Enquiry, 1988-1991)

| MAJOR FAILURE RATES | | | | | *MINOR FAILURE RATES | | |
|---|---|---|---|---|---|---|---|
| Number of Major Failures | Major Failures per Breaker Year | *** Hours Downtime per Failure Average | Median | VOLTAGE kV | Sample Size Breaker Years | Number of Failures* | Failures* per Breaker Year |
| 475** | .00672 | 94.6 | 10.0 | All Voltages | 70,708 | 3,358 | .0475 |
| 67 | .00275 | 39.1 | 24.0 | 63 ≤ V <100 | 24,355 | 542 | .0223 |
| 160 | .00680 | 51.1 | 10.0 | 100 ≤ V <200 | 23,520 | 1,118 | .0475 |
| 89 | .00814 | 54.6 | 8.0 | 200 ≤ V <300 | 10,933 | 762 | .0697 |
| 120 | .01210 | 162.5 | 10.0 | 300 ≤ V <500 | 9,917 | 770 | .0776 |
| 39 | .01967 | 209.4 | 36.0 | 500 ≤ V | 1,983 | 166 | .0837 |

NOTES:
* Minor failures plus defects
** 31 of the 475 major failures had a fire and/or explosion
*** Downtime includes: time from discovery of the failure until the breaker is returned to service, exclude deliberate delays.



Copyright © 1998 IEEE. All rights reserved.

TABLE 4 - MAJOR FAILURE MODES OF HIGH VOLTAGE CIRCUIT BREAKERS (Results from CIGRE 13-06 WG Enquiries - All voltages, Above 63 kV)

| 1st Enquiry % | 2nd Enquiry % | |
|---|---|---|
| 33.7 | 24.6 | Does not close on command |
| 14.1 | 8.3 | Does not open on command |
| 1.7 | 1.0 | Closes without command |
| 5.2 | 7.0 | Opens without command |
| 1.6 | 1.7 | Does not make the current |
| 1.9 | 3.0 | Does not break the current |
| 2.5 | 1.5 | Fails to carry the current |
| 2.6 | 3.2 | Breakdown to earth |
| 0.5 | 1.5 | Breakdown between poles |
| 4.0 | 3.6 | Breakdown across open pole, internal |
| 1.2 | 1.5 | Breakdown across open pole, external |
| * | 28.5 | Locking in open or closed position |
| 31.0 | 14.6 | Other failure necessitating intervention within 30 minutes |
| 773 | 471 | Number of Answers |

* "Locking" failure mode data not collected in 1st Enquiry. Special study of 2nd Enquiry data found that half of "Locking" failures should probably have been reported as "does not close on command" (37%) or "does not open on command" (13%).

TABLE 5 - MINOR FAILURE MODES* OF HIGH VOLTAGE CIRCUIT BREAKERS (Results from CIGRE 13-06 WG Second Enquiry - All Voltages, Above 63 kV)

| % | |
|---|---|
| 30. | Air or hydraulic leakage in operating mechanism |
| 16. | Small SF6 gas leakage due to corrosion |
| 23. | Small SF6 gas leakage due to other causes |
| 16. | Change of functional characteristics |
| 15. | Others |
| 3332 | Number of Answers |

* Data not collected in First Enquiry

TABLE 6 - ORIGIN OF FAILURES OF HIGH VOLTAGE CIRCUIT BREAKERS (Results from CIGRE 13-06 WG Enquiries - All Voltages, Above 63 kV)

| Major Failures 1st Enquiry | Major Failures 2nd Enquiry | | Minor Failures 1st Enquiry | Minor Failures 2nd Enquiry |
|---|---|---|---|---|
| * | 44.0% | Mechanical in Operating Mechanism (Earthed) | * | 39.4% |
| 70.3% | 10.4% | Mechanical in Other Parts of Circuit Breaker | 85.6% | 9.9% |
| 10.6% | 13.9% | Electrical (Main circuit | 2.7% | 0.9% |
| 19.1% | 24.5% | Electrical Auxiliary and Control Circuit | 11.7% | 10.2% |
| * | 7.2% | Tightness of SF6-Gas System | * | 39.6% |
| 775 | 461 | Number of Failures | 1602 | 3233 |

* Not specified in First Enquiry

TABLE 7 - CAUSE OF MAJOR AND MINOR FAILURES OF HIGH VOLTAGE CIRCUIT BREAKERS (Results from CIGRE 13-06 WG Enquiries - All Voltages, Above 63 kV)

| Major Failures 1st Enquiry | Major Failures 2nd Enquiry | | Minor Failures 1st Enquiry | Minor Failures 2nd Enquiry |
|---|---|---|---|---|
| | 25.4% | Design | | 24.7% |
| *45.3% | | Design & Manufacture | *52.5% | |
| | 28.7% | Manufacture | | 39.1% |
| 0.7% | 1.1% | Inadequate Instructions | 0.3% | 1.7% |
| 9.3% | 8.2% | Incorrect Erection | 10.7% | 7.1% |
| 1.2% | 6.0% | Incorrect Operation | 0.2% | 4.5% |
| 8.1% | 2.8% | Incorrect Maintenance | 4.5% | 2.6% |
| 4.8% | 3.4% | Stresses Beyond Specification | 0.7% | 1.8% |
| 2.3% | 5.4% | Other External Causes | 1.7% | 6.6% |
| 28.3% | 19.0% | Other | 29.4% | 11.9% |
| 751 | 464 | Number of Failures | 1604 | 3294 |

* First Enquiry combined "Design" and "Manufacture"

TABLE 8 - ESTIMATED AVERAGE NUMBER OF OPERATING-CYCLES PER YEAR PER BREAKER (Results from CIGRE 13-06 WG Enquiries - All voltages, Above 63 kV)

| | 1st Enquiry | 2nd Enquiry |
|---|---|---|
| AVERAGE | 26.5 | 42 |
| 10% PERCENTILE | 3.3 | 13 |
| 25% PERCENTILE | 6.3 | 20 |
| MEDIAN | 13.1 | 30 |
| 75% PERCENTILE | 28.8 | 50 |
| 90% PERCENTILE | 53.1 | 76 |
| 95% PERCENTILE | 78.0 | 84 |
| MAXIMUM | 548.6 | 1760 |
| No. of Breakers | | *64,676 |
| No. of Answers | *422 | |

* First Enquiry weighted each answer equally and Second enquiry weighted each breaker equally



Copyright © 1998 IEEE. All rights reserved.

TABLE 9 - RELIABILITY DATA ON HIGH VOLTAGE CIRCUIT BREAKERS
ABOVE 63 kV THAT CAN BE USED IN SYSTEM RELIABILITY STUDIES
(from CIGRE 13-06 Working Group First International
Enquiry 1974-1977, All Interrupting Technologies)

1. Major Failures per Open Command $\lambda_{c1} + \lambda_{c2}$
2. Major Failures per Close Command $\lambda_{c3} + \lambda_{c4}$
3. Major Failures per Cycle** $\lambda_c = \lambda_{c1} + \lambda_{c2} + \lambda_{c3} + \lambda_{c4}$
4. Average Number of Cycles** per Year C
5. Major Failures per Breaker-Year During Commands to Open or Close $C \cdot \lambda_c$
6. Major Failures per Breaker-Year Occuring Without A Command to Open or Close $\lambda_s$
7. Total Major Failures per Breaker-Year $\lambda_M = \lambda_s + C \cdot \lambda_c$

| $\lambda_{c1}$ Does Not Open On Command | $\lambda_{c2}$ Does Not Break the Current | $\lambda_{c3}$ Does Not Close On Command | $\lambda_{c4}$ Does Not Make the Current | $\lambda_c$ Major Failures per10,000 Cycles** | C Average Number of Cycles** per Year | VOLTAGE kV | $C \cdot \lambda_c$ Major Failure per Breaker Year | $\lambda_s$ Major Failure per Breaker Year | $\lambda_M$ Total Major Failure per Breaker Year |
|---|---|---|---|---|---|---|---|---|---|
| MAJOR FAILURES PER 10,000 OPEN COMMANDS | | MAJOR FAILURES PER 10,000 CLOSE COMMANDS | | | | | | | |
| 0.84 | 0.11 | 2.01 | 0.10 | 3.06 | 26.5 | All Volt. | .0081 | .0077*** | .0158 |
| 0.166 | 0.018* | 0.562 | 0.010* | 0.756 | 24.7 | 63≤V<100 | .0019 | .0022 | .0041 |
| 0.81 | 0.12* | 2.60 | 0.05* | 3.58 | 23.8 | 100≤V<200 | .0085 | .0078 | .0163 |
| 1.42 | 0.07* | 2.54 | 0.32* | 4.35 | 32.0 | 200≤V<300 | .0139 | .0119 | .0258 |
| 3.16 | 0.64* | 5.39 | 0.24* | 9.43 | 25.0 | 300≤V<500 | .0236 | .0219 | .0455 |
| 9.75* | 0.00* | 12.98* | 0.00* | 22.73* | 26.8 | 500≤ V | .0609 | .0436 | .1045 |

NOTES
* Small sample size in failure mode data - less than 8 failures
** A cycle is one open command and one close command
*** Approximately 10.7% of these major failures are "breakdown across open pole" and another 3.5% are "closes without command"

TABLE 10 - RELIABILITY DATA ON SINGLE-PRESSURE HIGH VOLTAGE CIRCUIT BREAKERS APPLIED ABOVE 63 kV THAT CAN BE USED IN SYSTEM RELIABILITY STUDIES
(from CIGRE 13-06 Working Group Second International Enquiry 1988-1991)

Assumes that 13% of the "Locking" Failures Occured After a Command to Open and Another 37% of the "Locking" Failures Occured After a Command to Close

| $\lambda_{c1}$ Does Not Open On Command | $\lambda_{c2}$ Does Not Break the Current | $\lambda_{c3}$ Does Not Close On Command | $\lambda_{c4}$ Does Not Make the Current | $\lambda_c$ Major Failures per10,000 Cycles** | C Average Number of Cycles** per Year | VOLTAGE kV | $C \cdot \lambda_c$ Major Failure per Breaker Year | $\lambda_s$ Major Failure per Breaker Year | $\lambda_M$ Total Major Failure per Breaker Year |
|---|---|---|---|---|---|---|---|---|---|
| MAJOR FAILURES PER 10,000 OPEN COMMANDS | | MAJOR FAILURES PER 10,000 CLOSE COMMANDS | | | | | | | |
| 0.192 | 0.048 | 0.562 | 0.027 | 0.829 | 42. | All Volt. | .00348 | .00324*** | .00672 |
| 0.077 | 0.000* | 0.167 | 0.009* | 0.253 | 47. | 63≤V<100 | .00119 | .00156 | .00275 |
| 0.161 | 0.043* | 0.781 | 0.000* | 0.985 | 40. | 100≤V<200 | .00394 | .00286 | .00680 |
| 0.229 | 0.071* | 0.648 | 0.095* | 1.043 | 39. | 200≤V<300 | .00407 | .00407 | .00814 |
| 0.524 | 0.113* | 1.071 | 0.057* | 1.765 | 36. | 300≤V<500 | .00635 | .00575 | .01210 |
| 0.506* | 0.336* | 0.951 | 0.112* | 1.905 | 45 | 500≤ V | .00857 | .01110 | .01967 |

NOTES
* Small sample size in failure mode data - less than 8 failures
** A cycle is one open command and one close command
*** Approximately 10.6% of these major failures are "breakdown across open pole" and another 2.2% are "closes without command"



Copyright © 1998 IEEE. All rights reserved.

TABLE 11 - AVERAGE COST OF SCHEDULED SERVICING of HIGH VOLTAGE CIRCUIT BREAKERS ABOVE 63 kV FROM FIRST INTERNATIONAL ENQUIRY FOR YEARS 1974-1977
(Includes Ordinary Servicing and Detailed Servicing for All Technology Breakers)

| Interval Between Scheduled Servicing YEARS | | VOLTAGE kV | Labor Effort MANHOURS PER BREAKER/YEAR | | | | Spare Parts Consumed* MANHOURS PER BREAKER/YEAR | | | |
|---|---|---|---|---|---|---|---|---|---|---|
| Average | Median | | Average | 10 Percentile | 50 Percentile | 90 Percentile | Average | 10 Percentile | 50 Percentile | 90 Percentile |
| 2.3 | 3.0 | 63 ≤ V < 100 | 19.6 | 5.0 | 17.5 | 30.0 | 55.0 | 1.0 | 5.0 | 60.0 |
| 2.0 | 2.5 | 100 ≤ V < 200 | 34.0 | 10.1 | 30.0 | 72.0 | 38.2 | 3.0 | 12.0 | 60.0 |
| 2.0 | 3.0 | 200 ≤ V < 300 | 47.4 | 15.0 | 44.0 | 120.0 | 87.5 | 3.0 | 20.0 | 90.0 |
| 1.4 | 2.0 | 300 ≤ V < 500 | 48.5 | 13.6 | 50.0 | 169.0 | 72.7 | 10.0 | 38.0 | 157.5 |

NOTES
* Each country converted the cost of spare parts consumed into equivalent manhours using their labor rate. This resulted in manhours being used as an international currency for both labor effort and spare parts consumed.

DEFINITIONS IN TABLE 11

ORDINARY SERVICING - Servicing scheduled according to given operational conditions which would include a check of the operation measurement of the principal control devices, the measurement of the characteristics of insulation and arc-extinguishing media, cleaning, washing, lubricating, tightening, adjusting, replacing worn parts in accordance with given instructions, and the measurement of the operation characteristics such as lock-out pressures, operating time, insulation of auxiliary circuits, etc

DETAILED SERVICING - Scheduled servicing in accordance with the given instructions necessitated by long service, large number of operations, etc. It will include a more detailed examination of all the parts than carried during Ordinary Servicing.

TABLE 12 - ESTIMATED COST FOR SCHEDULED OVERHAUL of HIGH VOLTAGE CIRCUIT BREAKERS ABOVE 63 kV FROM SECOND INTERNATIONAL ENQUIRY - YEARS 1988-1991
(Includes Scheduled Overhaul for Single Pressure SF6 Circuit Breakers)

| Interval Between Scheduled Overhaul YEARS | | | | VOLTAGE kV | Labor Effort MANHOURS PER BREAKER/YEAR | | | | Spare Parts Consumed* MANHOURS PER BREAKER/YEAR | | | |
|---|---|---|---|---|---|---|---|---|---|---|---|---|
| Average | 10 Percentile | 50 Percentile | 90 Percentile | | Average | 10 Percentile | 50 Percentile | 90 Percentile | Average | 10 Percentile | 50 Percentile | 90 Percentile |
| 7.6 | 4.0 | 6.0 | 12.0 | 63 ≤ V < 100 | 15.3 | 5. | 15. | 30. | 25.4 | 2. | 24. | 61. |
| 8.8 | 5.0 | 8.5 | 15.0 | 100 ≤ V < 200 | 17.4 | 3. | 12. | 43. | 20.7 | 2. | 8. | 48. |
| 8.2 | 4.0 | 7.9 | 12.0 | 200 ≤ V < 300 | 24.8 | 5. | 15. | 50. | 31.6 | 1. | 12. | 74. |
| 8.2 | 4.0 | 7.0 | 12.0 | 300 ≤ V < 500 | 31.0 | 5. | 18. | 56. | 17.7 | 2. | 8. | 48. |

NOTES
* Each country converted the cost of spare parts consumed into equivalent manhours using their labor rate. This resulted in manhours being used as an international currency for both labor effort and spare parts consumed.

DEFINITION IN TABLE 12

OVERHAUL - Work done with the objective of repairing or replacing parts, which are found to be below standard by inspection or test or as required by manufacturers maintenance manual, in order to restore the component and/or the circuit-breaker to an acceptable condition.



Copyright © 1998 IEEE. All rights reserved.

**Appendix K**
**Report of Circuit Breaker Reliability Survey of Industrial and Commercial Installations**

**By**
**A. T. Norris**
***IEEE Industrial and Commercial Power Systems Technical Conference***
**Chicago, IL, May 8-11, 1989**

Reprinted from IEEE Conference Record
89CH27738-3, pp. 1-16

Copyright © 1998 IEEE. All rights reserved.

This page is intentionally blank

# REPORT OF CIRCUIT BREAKER RELIABILITY SURVEY OF INDUSTRIAL AND COMMERCIAL INSTALLATIONS

Andrew Norris (coordinating Author)[1]

CIRCUIT BREAKER RELIABILITY WORKING GROUP
POWER SYSTEMS RELIABILITY SUBCOMMITTEE
POWER SYSTEMS ENGINEERING COMMITTEE
INDUSTRIAL & COMMERCIAL POWER SYSTEMS DEPARTMENT
IEEE INDUSTRY APPLICATIONS SOCIETY

## ABSTRACT

The Reliability Subcommittee of the IEEE Industry Applications Society initiated a survey of the reliability of circuit breakers in industrial and commercial installations in keeping with its commitment to update information on previous surveys. The survey was restricted to circuit breakers that are less than fifteen (15) years old, and excluded molded case breakers, in order to provide information on units of interest and to obtain information on new circuit breaker technologies.

A more detailed explanation on reasons for this survey is included in the appendix.

## INTRODUCTION

The results of the survey conducted in 1985 on the reliability of circuit breakers in industrial and commercial installations are summarized in the attached tables. The data obtained includes information on estimated numbers of operations per year for both fault and non-fault situations. Information has also been collected on low voltage circuit breakers comparing static and electro-mechanical integral trip devices.

Each table is discussed to highlight results of the survey. It is the intent of this working group to present the results as updated information on industrial applications and the drawing of definite conclusions is left to the reader.

The reasons for conducting the survey were written down at the beginning and are included in the appendix. Some of these objectives were not achieved due to the small number of participants in the survey. It was not possible to determine the effect of preventive maintenance on failure rate. Insufficient data were submitted on vacuum and single-pressure SF-6 circuit breakers.

[1] The Author is with the University of Missouri - Columbia, Missouri 65211

Members of the Circuit Breaker Reliability Working are Andrew T. Norris (Chairman), James W. Aquillino, William F. Braun, Jr., Charles R. Heising, Don O. Koval, Lou D. Monaghan, Pat O'Donnell, A.D. Patton, and Peter W. Dwyer.

## SURVEY RESPONSE

The survey questionnaire, along with the Reasons For Conducting a New Survey on Circuit Breaker Reliability, is included in the appendix.

Due to the low number of responses, 13 plant locations, no attempt was made to separate failures by industry types. While the number of respondents was less than hoped for, the questionnaires were all fully completed for the requested data, with only one (1) "unknown" entry listed which was for a failure duration.

The following list provides a summary of the survey response

| | |
|---|---|
| No. of Plants | 13 |
| No. of Circuit Breakers | 2137 |
| Sample Size (unit years) | 4097.17 |
| Total no. of Failures | 59 |

The small sample size of the data received limited the results that are being published to four equipment/voltage categories. A special note is made in the tables where the number of failures in a specific category is considered an inadequate sample size. Less than 8 failures has been considered as an inadequate sample size.

## OVERALL SUMMARY OF RELIABILITY DATA

Table 1 summarizes the overall results by voltage class. The low number of failures (4) in the 601 volt to 15,000 volt circuit breaker class makes this failure rate data of questionable validity.

This survey shows an increase in the failure rate per unit-year, in the 0-600 volt class, of nearly 3 times the value shown in the 1973 survey. There is, however, a large reduction in the average and maximum failure durations of 30% and 99.5% respectively.

## LOCATION

Table 2 shows the effect of outdoor vs. indoor location on the failure rate of 0 - 600 volt circuit breakers. The failure rate was 1.54 times higher for outdoor circuit breakers.

Copyright © 1998 IEEE. All rights reserved.

INTEGRAL TRIP

Table 3 compares the integral trip unit type on the failure rate for 0-600 volt circuit breakers. The failure rate of static type integral trip units is 36% of the electromechanical units.

FAILURE MODE

Table 4 shows the failure modes for circuit breakers reported in the survey. It is noted that there were only two instances of units that "failed to open on command", and no occurrences of "closes without command". In the 0-600 volt class all circuit breakers reported had an integral trip device. The circuit breakers with a static integral trip device were split between "failed to close on command" (44%), and "opens without command" (56%). Circuit breakers with electro-mechanical type of integral trip device had a very large portion (93%) of the failures reported to be "failed to close on command".

FAILURE INITIATING CAUSE

Table 5 shows the primary failure initiating cause reported for both 34.5-138kV and 345kV circuit breaker groups as "mechanical breakdown" as 56% and 65% respectively. The 0-600 volt circuit breaker group shows "malfunction of protective relay or tripping device" to be the major category at (93%) for units with electro-mechanical integral tripping. The 0-600 volt units with static type integral tripping reported a roughly even split between "transient overvoltage" and "malfunction of protective relay or tripping device".

FAILURE CONTRIBUTING CAUSE

Table 6 shows that "dust, salt spray, or other contaminant exposure" is the primary reported listing (at 93%) for failure contributing cause for 0-600 volt circuit breakers with electro-mechanical type integral trip. The 0-600 volt circuit breakers with static integral trip had "lack of preventive maintenance" reported for 56% of failures, with the remaining 44% shown as "persistent overload". Entries for other voltage classes are in much lower percentages, except for the "other" category in the 34.5-138kV and 345kV groups.

SUSPECTED FAILURE RESPONSIBILITY

In table 7 the data shows most 0-600 volt breakers with electro-mechanical type of integral trip as having "inadequate physical protection" (93%) as the suspected failure responsibility. The 0-600 volt breakers with static type integral trip reports 56% under "improper operation", and 44% under "inadequate maintenance". The 34.5-138kV and 345kV voltage categories both show "defective component" as the main category.

FAILURE DISCOVERED DURING

Table 8 shows a very large percentage of failures in the 0-600 volt circuit breakers, a total of 98%, as being discovered "during normal operation". The 34.5-138kV class showed a significant percentage of failures (67%) as being discovered "during routing testing/maintenance", while the 345kV breakers were split between "during routing testing/maintenance" and "during normal operation" with 48% in each category.

FAILURES vs. MONTHS SINCE LAST MAINTENANCE

Table 9 shows that most failures occurred within 24 months of the last maintenance.

FAILURE REPAIR METHOD

Table 10 shows that a high percentage of circuit breakers in the 0-600 volt, 601-15,000 volt, and 34.5-138kV ratings were "repaired failed component in place or sent out for repair".

The 345kV group of circuit breakers shows the highest number (44%) as "replaced failed unit with spare". This large percentage is considered questionable since an inspection of the failed component entries showed in some cases that a failed component, such as an air compressor, was reported as "replaced failed unit with spare".

REPAIR URGENCY

It is of particular interest that, in Table 11, only 7% of the 59 failures reported for all voltage categories listed the repair urgency as requiring working on a round-the-clock bases. This may be due, at least in part, to the fact that two of the voltage classes (0-600 volt, and 601-15,000 volt) containing 45% of the total failures, and had maximum failure durations of 4 hours.

The 34.5-138kV and 345kV circuit breakers, with their longer failure durations, also show nearly all repair work as normal working hours.

POPULATION OF CIRCUIT BREAKERS vs. MAINTENANCE QUALITY AND NORMAL MAINTENANCE CYCLE

Table 12 shows the majority of respondents (53%) considered themselves as having a "fair" maintenance quality, while 39% considered their maintenance



Copyright © 1998 IEEE. All rights reserved.

quality as "excellent". All of the respondents who listed their maintenance quality as excellent had a normal maintenance cycle of 0-24 months. The respondents with "fair" maintenance quality were split between categories with 37% (by unit-year) showing 0-24 month, 28% (by unit-year) showing more then 24 months and, interestingly enough, 35% with No preventive maintenance.

OVERALL CIRCUIT BREAKER OPERATIONS PER YEAR DATA

The listing of "overall circuit breaker operations data" has been entered in three different tables.

Table 13a shows the data entered in a non-weighted format. The fault, and non-fault, operations per year are based on non-weighted numbers. The non-weighted values were obtained by counting each population data line entry as one unit (regardless of how many circuit breakers or unit-years were reported in that line). The average number of operations for each entry line were summed and the result divided by the number of line entries.

Table 13b shows the data weighted by the number of circuit breakers. The fault and non-fault operations per year are based on the actual number of circuit breakers reported, regardless of time in service. The average number of operations for each entry line was multiplied times the number of circuit breakers reported for that line. The resulting values were summed and the total was then divided by the number of circuit breakers reported in that voltage category.

Table 13c shows the data weighted by the number of unit-years. The fault and non-fault operations per year are based on the number of circuit breakers reported times their number of years in service (unit-years). The unit-years for each circuit breaker times the average operations per year was summed and the result divided by the total number of unit-years reported in that voltage category.

With the exception of the 0-600 volt category, the average number of operations per year remained reasonably consistent over the three tables.

Copyright © 1998 IEEE. All rights reserved.

Table 1 – OVERALL CIRCUIT BREAKER RELIABILITY DATA

| | 0-600 Volt * Air Magnetic | 601-15,000 Volt *** Air Magnetic | 34.5-138 kV Bulk Oil | 345 kV Air Blast & SF-6 (2 presure) |
|---|---|---|---|---|
| Sample Size (number of units) | 1695 | 315 | 64 | 51 |
| Sample Size (unit-years) | 2941.24 | 694.76 | 192.50 | 256.00 |
| Total Fault Operations (for all unit-years) | 225 | 343 | 103 | 434 |
| Total Non-Fault Operations (for all unit-years) | 24604 | 24914 | 4320 | 6200 |
| Number of Failures | 23 | 4 ** | 9 | 23 |
| Failure Rate - Failures/Unit-Year | 0.00782 | 0.00576 ** | 0.04675 | 0.08984 |
| Failure Duration (Hours/Failure) | | ** | | |
| Average | 2.8 | 2.25 | 41.11 | 171.45 |
| Minimum | 0.5 | 1 | 1 | 1 |
| Median | 4 | 2 | 3 | 150 |
| Maximum | 4 | 4 | 240 | 720 |

* Excludes Molded Case
** Small Sample Size - less than 8 failures (or data points)
*** Zero failures in 2.67 unit-years reported for Vacuum 601-15,000 volt (not included in this table)

NOTE: The "Total Fault Operations" and "Total Non-Fault Operations" were determined by taking the Unit-years (for each circuit breaker reported) times it's average number of operations (Fault or Non-Fault) per year, and adding the values for all circuit breakers in that catagory.



Copyright © 1998 IEEE. All rights reserved.

Table # 2 CIRCUIT BREAKERS, 0-600 VOLT* OUTDOOR versus INDOOR LOCATION

| | Outdoor | Indoor |
|---|---|---|
| Sample Size (unit-years) | 873.57 | 2067.67 |
| Number of Failures | 9 | 14 |
| Failure Rate - Failures/Unit-Year | 0.0103 | 0.00677 |

* Excludes Molded Case

Table # 3 CIRCUIT BREAKERS, 0-600 VOLT* EFFECT OF INTEGRAL TRIP TYPE

| | Static | Electro-mechanical |
|---|---|---|
| Sample Size (unit-years) | 1888.49 | 1052.75 |
| Number of Failures | 9 | 14 |
| Failure Rate - Failures/Unit-Year | 0.00477 | 0.0133 |

* Excludes Molded Case

Copyright © 1998 IEEE. All rights reserved.

TABLE # 4 - CIRCUIT BREAKERS
VOLTAGE VS. FAILURE MODE

| | 0-600 VOLT * Air Magnetic Static | 0-600 VOLT * Air Magnetic Electro-mech | 601-15KV Air Magnetic | 34.5KV-138KV Bulk Oil | 345KV Air Blast & SF-6 (2 presure) |
|---|---|---|---|---|---|
| FAILED TO CLOSE ON COMMAND | 4 44% | 13 93% | -0- | 3 33% | -0- |
| FAILED TO CLOSE AND LATCH | -0- | -0- | -0- | 1 11% | -0- |
| FAILED TO OPEN ON COMMAND | -0- | -0- | 2 50% | -0- | -0- |
| CLOSES WITHOUT COMMAND | -0- | -0- | -0- | -0- | -0- |
| OPENS WITHOUT COMMAND | 5 56% | -0- | 1 25% | -0- | 7 30% |
| FAILED TO BREAK CURRENT WHEN OPENING | -0- | -0- | -0- | -0- | -0- |
| DAMAGED WHILE SUCCESSFULLY OPENING | -0- | -0- | 1 25% | -0- | -0- |
| DAMAGED WHILE CLOSING | -0- | -0- | -0- | -0- | -0- |
| FAILED TO CARRY CURRENT | -0- | -0- | -0- | 1 11% | -0- |
| FAULT TO GROUND, OR PHASE TO PHASE (NOT WHILE OPENING OR CLOSING) | -0- | -0- | -0- | -0- | -0- |
| FAULT ACROSS OPEN CONTACTS (NOT WHILE OPENING OR CLOSING) | -0- | -0- | -0- | -0- | -0- |
| LOSS OF VACUUM (FOR VACUUM BREAKERS) | -0- | -0- | -0- | -0- | -0- |
| OTHER FAILURE REQUIRING REMOVAL FROM SERVICE WITHIN 30 MINUTES | -0- | -0- | -0- | -0- | 11 48% |
| OTHER FAILURE NOT REQUIRING REMOVAL FROM SERVICE | -0- | 1 7% | -0- | 3 33% | 3 13% |
| UNKNOWN | -0- | -0- | -0- | 1 11% | 2 9% |
| TOTAL FAILURES | 9 100% | 14 100% | 4 100% | 9 100% | 23 100% |

* Excludes Molded Case

Copyright © 1998 IEEE. All rights reserved.

TABLE # 5 - CIRCUIT BREAKERS
VOLTAGE VS. FAILURE INITIATING CAUSE

| | 0-600 VOLT * Air Magnetic | | 601-15KV ** Air Magnetic | 34.5KV-138KV Bulk Oil | 345KV Air Blast & SF-6 (2 pressure) |
|---|---|---|---|---|---|
| | Static | Electro-mech | | | |
| TRANSIENT OVERVOLTAGE-SUCH AS LIGHTNING, SWITCHING SURGES, OR SYSTEM FAULTS | 4 44% | -0- | 1 25% | -0- | -0- |
| INSULATION BREAKDOWN | -0- | -0- | -0- | -0- | 1 4% |
| MECHANICAL BURNOUT, FRICTION, OR SEIZING OF MOVING PARTS | -0- | -0- | -0- | -0- | 1 4% |
| MECHANICAL BREAKDOWN - SUCH AS CRACKING, LOOSENING, ABRADING, OR DEFORMING OF STATIC OR STRUCTURAL PARTS | -0- | -0- | 1 25% | 5 56% | 15 65% |
| PHYSICAL DAMAGE OR SHORTING FROM OUTSIDE SOURCE - SUCH AS VEHICULAR ACCIDENT | -0- | -0- | -0- | -0- | -0- |
| ELECTRICAL FAULT OR MALFUNCTION | -0- | -0- | 1 25% | 1 11% | 3 13% |
| MALFUNCTION OF PROTECTIVE RELAY OR TRIPPING DEVICE | 5 56% | 13 93% | -0- | 1 11% | -0- |
| OTHER AUXILIARY DEVICE MALFUNCTION | -0- | -0- | -0- | 2 22% | -0- |
| LOW, OR NO, AUXILIARY VOLTAGE - FOR CIRCUITS SUCH AS AIR COMPRESSORS, AND SF-6 HEATERS | -0- | -0- | -0- | -0- | -0- |
| OTHER | -0- | 1 7% | 1 25% | -0- | 3 13% |
| TOTAL FAILURES | 9 100% | 14 100% | 4 100% | 9 100% | 23 100% |

* Excludes Molded Case

Copyright © 1998 IEEE. All rights reserved.

TABLE # 6 - CIRCUIT BREAKERS
VOLTAGE VS. FAILURE CONTRIBUTING CAUSE

| | 0-600 VOLT * Air Magnetic Static | 0-600 VOLT * Air Magnetic Electro-mech | 601-15KV ** Air Magnetic | 34.5KV-138KV Bulk Oil | 345KV Air Blast & SF-6 (2 presure) |
|---|---|---|---|---|---|
| OVERLOAD - PERSISTENT | 4 44% | -0- | 1 25% | -0- | -0- |
| EXTREME HEAT | -0- | -0- | -0- | -0- | -0- |
| EXTREME COLD | -0- | -0- | -0- | -0- | 3 13% |
| SEVERE WEATHER - SUCH AS WIND, RAIN, SNOW, OR SLEET | -0- | -0- | -0- | -0- | -0- |
| ABNORMAL MOISTURE | -0- | -0- | -0- | -0- | -0- |
| AGRESSIVE CHEMICALS | -0- | -0- | -0- | -0- | -0- |
| DUST, SALT SPRAY, OR OTHER CONTAMINANT EXPOSURE | -0- | 13 93% | -0- | -0- | -0- |
| NORMAL DETERIORATION FROM AGE | -0- | -0- | -0- | 2 22% | 1 4% |
| LUBRICANT LOSS, OR DEFICIENCY | -0- | -0- | 1 25% | 1 11% | -0- |
| IMPROPER OPERATING OR TEST PROCEDURE | -0- | -0- | -0- | -0- | 1 4% |
| TRIPPING SOURCE DEFICIENT | -0- | -0- | -0- | -0- | -0- |
| LACK OF PREVENTIVE MAINTENANCE | 5 56% | -0- | 1 25% | 1 11% | -0- |
| OTHER | -0- | 1 7% | 1 25% | 5 56% | 18 78% |
| TOTAL FAILURES | 9 100% | 14 100% | 4 100% | 9 100% | 23 100% |

* Excludes Molded Case



Copyright © 1998 IEEE. All rights reserved.

TABLE # 7 - CIRCUIT BREAKERS
VOLTAGE VS. SUSPECTED FAILURE RESPONSIBILITY

| | 0-600 VOLT * Air Magnetic Static | 0-600 VOLT * Air Magnetic Electro-mech | 601-15KV ** Air Magnetic | 34.5KV-138KV Bulk Oil | 345KV Air Blast & SF-6 (2 presure) |
|---|---|---|---|---|---|
| DEFECTIVE COMPONENT | -0- | -0- | 1<br>25% | 4<br>44% | 13<br>57% |
| IMPROPER HANDLING/SHIPPING | -0- | -0- | -0- | -0- | -0- |
| POOR INSTALLATION/TESTING | -0- | -0- | -0- | 1<br>11% | 1<br>4% |
| INADEQUATE MAINTENANCE | 4<br>44% | -0- | -0- | 1<br>11% | -0- |
| IMPROPER OPERATION | 5<br>56% | -0- | 1<br>25% | 1<br>11% | -0- |
| IMPROPER APPLICATION | -0- | 1<br>7% | -0- | -0- | -0- |
| INADEQUATE PHYSICAL PROTECTION | -0- | 13<br>93% | -0- | -0- | -0- |
| OUTSIDE AGENCY (SUCH AS VEHICULAR ACCIDENT) | -0- | -0- | -0- | -0- | -0- |
| OTHER | -0- | -0- | 2<br>50% | 2<br>22% | 4<br>17% |
| UNKNOWN | -0- | -0- | -0- | -0- | 5<br>22% |
| TOTAL FAILURES | 9<br>100% | 14<br>100% | 4<br>100% | 9<br>100% | 23<br>100% |

* Excludes Molded Case

Copyright © 1998 IEEE. All rights reserved.

TABLE # 8 - CIRCUIT BREAKERS
VOLTAGE VS. "FAILURE DISCOVERED DURING"

| | 0-600 VOLT * Air Magnetic Static | 0-600 VOLT * Electro-mech | 601-15KV ** Air Magnetic | 34.5KV-138KV Bulk Oil | 345KV Air Blast & SF-6 (2 presure) |
|---|---|---|---|---|---|
| DURING ROUTINE TESTING/MAINTENANCE | -0- | 1<br>7% | 1<br>25% | 6<br>67% | 11<br>48% |
| DURING NORMAL OPERATION | 9<br>100% | 13<br>93% | 3<br>75% | 3<br>33% | 11<br>48% |
| OTHER | -0- | -0- | -0- | -0- | 1<br>4% |
| TOTAL FAILURES | 9<br>100% | 14<br>100% | 4<br>100% | 9<br>100% | 23<br>100% |

* Excludes Molded Case

** Small Sample Size - less than 8 failures (or data points)

TABLE # 9 - CIRCUIT BREAKERS
FAILURES VS. MONTHS SINCE LAST MAINTENANCE

| *** | 0-600 VOLT * Air Magnetic Static | 0-600 VOLT * Electro-mech | 601-15KV ** Air Magnetic | 34.5KV-138KV Bulk Oil | 345KV Air Blast & SF-6 (2 presure) |
|---|---|---|---|---|---|
| 0 - 24 MONTHS | -0- | 14<br>100% | 2<br>50% | 8<br>89% | 17<br>74% |
| OVER 24 MONTHS | 9<br>100% | -0- | 2<br>50% | -0- | 6<br>26% |
| NO PREVENTIVE MAINTENANCE | -0- | -0- | -0- | 1<br>11% | -0- |
| TOTAL FAILURES | 9<br>100% | 14<br>100% | 4<br>100% | 9<br>100% | 23<br>100% |

* Excludes Molded Case

** Small Sample Size - less than 8 failures (or data points)

*** The survey requested data for 0-12 month and 12-24 month periods. Due to the uncertainty about which of these two periods should be used for entries of 12 months since maintenance, they were combined into a single entry of 0-24 months.



Copyright © 1998 IEEE. All rights reserved.

Copyright © 1998 IEEE. All rights reserved.

TABLE # 10 - CIRCUIT BREAKERS
VOLTAGE VS. FAILURE REPAIR METHOD

| | 0-600 VOLT * Air Magnetic Static | Electro-mech | 601-15KV ** Air Magnetic | 34.5KV-138KV Bulk Oil | 345KV Air Blast & SF-6 (2 presure) |
|---|---|---|---|---|---|
| REPAIRED FAILED COMPONENT IN PLACE OR SENT OUT FOR REPAIR | 8 89% | 13 93% | 3 75% | 7 78% | 7 30% |
| REPLACED FAILED UNIT WITH SPARE | 1 11% | 1 7% | 1 25% | 2 22% | *** 10 43% |
| OTHER | -0- | -0- | -0- | -0- | 6 26% |
| TOTAL FAILURES | 9 100% | 14 100% | 4 100% | 9 100% | 23 100% |

* Excludes Molded Case

** Small Sample Size - less than 8 failures (or data points)

*** In some cases a failed component, not the complete breaker, was replaced with a spare.

TABLE # 11 - CIRCUIT BREAKERS
VOLTAGE VS. FAILURE REPAIR URGENCY

| | 0-600 VOLT * Air Magnetic Static | Electro-mech | 601-15KV ** Air Magnetic | 34.5KV-138KV Bulk Oil | 345KV Air Blast & SF-6 (2 presure) |
|---|---|---|---|---|---|
| WORKING ROUND-THE-CLOCK | 2 22% | | 1 25% | 1 11% | -0- |
| NORMAL WORKING HOURS | 7 78% | 14 100% | 3 75% | 8 89% | 23 100% |
| LOW PRIORITY | -0- | -0- | -0- | -0- | -0- |
| TOTAL FAILURES | 9 100% | 14 100% | 4 100% | 9 100% | 23 100% |

* Excludes Molded Case

** Small Sample Size - less than 8 failures (or data points)

TABLE # 12 - CIRCUIT BREAKERS
POPULATION OF CIRCUIT BREAKERS VERSUS
MAINTENANCE QUALITY & NORMAL MAINTENANCE CYCLE

| MAINTENAN QUALITY | MAINTENANCE, NORMAL CYCLE * 0 - 24 MONTHS | MORE THEN 24 MONTHS | NO PREVENTIV MAINTENAN | TOTAL | |
|---|---|---|---|---|---|
| | POPULATION: UNIT-YEARS | | | | |
| EXCELLENT | 1198.25 | 383 | -0- | 1581.25 | 39% |
| FAIR | 797.99 | 606.59 | 749.34 | 2153.92 | 53% |
| POOR | -0- | -0- | -0- | -0- | 0% |
| NONE | -0- | -0- | 362 | 362 | 9% |

* The survey requested data for 0-12 month and 12-24 month periods. Due to the uncertainty about which of these two periods should be used for entries of 12 months since maintenance, they were combined into a single entry of 0-24 months.

Table 13a - OVERALL CIRCUIT BREAKER OPERATIONS DATA (Non-weighted)

| | 0-600 Volt * Air Magnetic | 601-15,000 Volt Air Magnetic | 34.5-138 kV Bulk Oil | 345 kV Air Blast & SF-6 (2 presure) |
|---|---|---|---|---|
| Fault Operations/Year | | | | |
| Average | 0.175 | 0.3481 | 0.6945 | 1.1325 |
| Minimum | 0 | 0 | 0.05 | 0.2 |
| Median | 0.05 | 0.0769 | 0.75 | 2 |
| Maxumum | 1 | 1 | 2 | 2 |
| Non-Fault Operations/Year | | | | |
| Average | 19.2834 | 47.5357 | 24.125 | 30 |
| Minimum | 0 | 0.5 | 3 | 10 |
| Median | 1.667 | 5 | 15 | 30 |
| Maxumum | 100 | 400 | 100 | 50 |

* Excludes Molded Case

To get the non-weighted values for Average Fault (and Non-Fault) Operations per year, each line entry was counted as one unit (reguardless of how many circuit breakers were reported in that line). The average number of operations for each entry line were summed and the result divided by the number of line entries. Twenty (20) line entries would be counted as 20 units, even though each line might represent 5 circuit breakers.





Copyright © 1998 IEEE. All rights reserved.

Table 13b - OVERALL CIRCUIT BREAKER OPERATIONS DATA (weighted by number of breakers)

| | 0-600 Volt * Air Magnetic | 601-15,000 Volt Air Magnetic | 34.5-138 kV Bulk Oil | 345 kV Air Blast & SF-6 (2 presure) |
|---|---|---|---|---|
| **Fault Operations/Year** | | | | |
| Average | 0.0174 | 0.5898 | 0.4877 | 1.2341 |
| Minimum | 0 | 0 | 0.05 | 0.2 |
| Median | 0 | 1 | 0.75 | 2 |
| Maximum | 1 | 1 | 2 | 2 |
| **Non-Fault Operations/Year** | | | | |
| Average | 5.0932 | 27.1841 | 20.0156 | 35.098 |
| Minimum | 0 | 0.5 | 3 | 10 |
| Median | 5 | 25 | 20 | 30 |
| Maximum | 100 | 400 | 100 | 50 |

* Excludes Molded Case

To get the weighted values (weighted by number of circuit breakers) for Average Fault, and Non-Fault operations, the number of operations for each entry line is multiplied by the number of circuit breakers reported in that line. The product (number of circuit breakers times average operations) from each line was summed and the result divided by the total number of circuit breakers reported in that catagory.

Table 13c - OVERALL CIRCUIT BREAKER OPERATIONS DATA (weighted by number of unit-years)

| | 0-600 Volt * Air Magnetic | 601-15,000 Volt Air Magnetic | 34.5-138 kV Bulk Oil | 345 kV Air Blast & SF-6 (2 presure) |
|---|---|---|---|---|
| **Fault Operations/Year** | | | | |
| Average | 0.0767 | 0.4936 | 0.5375 | 1.6948 |
| Minimum | 0 | 0 | 0.05 | 0.2 |
| Median | 0.02 | 0.5 | 0.5 | 2 |
| Maximum | 1 | 1 | 2 | 2 |
| **Non-Fault Operations/Year** | | | | |
| Average | 8.3652 | 35.86 | 22.439 | 32.0313 |
| Minimum | 0 | 0.5 | 3 | 10 |
| Median | 1.6667 | 5 | 20 | 30 |
| Maximum | 100 | 400 | 100 | 50 |

* Excludes Molded Case

To get the weighted values (weighted by number of unit-years) for Average Fault, and Non-Fault operations, the number of operations for each survey line entry is multiplied by the number of unit-years (circuit breakers reported in that line times the number years in service). The product (number of unit-years times average operations) from each line was summed and the result divided by the total number of unit-years reported in that catagory.

Copyright © 1998 IEEE. All rights reserved.

## APPENDIX

### REASONS FOR CONDUCTING A NEW SURVEY ON CIRCUIT BREAKER RELIABILITY

by Circuit breaker Reliability
Working Group
C. R. Heising, Coordinating Author
A. T. Norris, Chairman
J. W. Aquilino L. G. Monaghan
R. N. Bell P. O'Donnell
W. F. Braun A. D. Patton

The main purpose of this reliability survey is to identify failure data and the effect of pertinent factors on important classes and types of circuit breakers, thus providing the designer and planner the valuable basic information needed to install a reliable and economic industrial or commercial power system.

Previous IEEE-IAS circuit breaker reliability surveys of industrial & commercial installations were published in 1962 and in 1973/74. The latter has been included in IEEE Standard No. 493-1980 - "Recommended Practice for the Design of Reliable Industrial & Commercial Power Systems." Pertinent information from the new survey will be included in future revisions of IEEE Standard No. 493.

Some of the important objectives in this new survey are: 1. Obtain failure mode data, 2. Obtain estimates of the number of operating cycles per year, 3. Obtain data on static trip devices for low voltage circuit breakers, 4. Obtain information on the effect of preventive maintenance on failure rate, 5. Obtain better information on suspected failure responsibility, failure initiating cause, and failure contributing cause, and 6. Obtain pertinent information on new circuit breaker technologies.

33% or more of the failures reported in the 1973/74 survey did not contain information on suspected failure responsibility, failure initiating cause, and failure contributing cause. It is hoped that this can be improved upon in the new survey. This is considered important information when trying to improve the reliability of circuit breakers used on industrial & commercial power systems. In the 1973/74 survey 23% of the failures were blamed on the manufacturer and 23% were blamed on inadequate maintenance and 36% were unknown. These were the three largest causes of failures. Inadequate maintenance is an area that an industrial or commercial user can do something about; and any pertinent information on this subject will be requested.

The 1973/74 survey did not collect information on the estimated number of operating cycles per year. This is important information when trying to estimate the probability of a circuit breaker successfully operating when commended to do so. This information will permit a reliability assessment versus duty application.

The 1973/74 survey did not collect low voltage circuit breaker data on whether of not a static trip device was used. This information is of interest to designers of power systems where there is much concern about failure rate of solid state versus electromechanical trip devices.

Approximately 30% of the circuit breakers in the 1973/74 survey were over ten years old. Circuit breakers more than 15 years old may not be typical of what is being used in the design of new power systems.

Various classes and types of circuit breakers in the 1973/74 survey had significantly different distributions of the various failure modes. Updated information on this subject is of interest to designers of power systems.

Reliability information on medium and high voltage circuit breakers using the newer technologies is of interest to designers of power systems. This includes vacuum and SF6-puffer circuit breakers.

Switchgear bus is not included in this survey. A separate survey was published on this subject in 1979. Protective relays, fuses, and switches are not included in this survey. A survey in 1978 on these equipment categories asked for information that many industrial and commercial users did not have readily available; and the survey was unsuccessful. A limited amount of information is contained in the 1973/74 survey on disconnect switches, relays, and fuses.



Copyright © 1998 IEEE. All rights reserved.

CIRCUIT BREAKERS

COMPANY NAME AND PLANT: _____

INDUSTRY TYPE: _____

PERIOD REPORTED - FROM: MONTH _____ YEAR _____

TO: MONTH _____ YEAR _____

LOCATION: _____

TOTAL POPULATION

| A | B | C | D | E | F | G | H | I | J | K | L | M |
|---|---|---|---|---|---|---|---|---|---|---|---|---|
| IDENTIFICATION NUMBER | CIRCUIT BREAKER TYPE (I-Insert Code) | NUMBER OF BREAKERS | USED PRIMARILY AS MOTOR STARTER (Y-YES, N-NO) | LINE-TO-LINE VOLTAGE (kV) | LOCATION (I-INDOOR, O-OUTDOOR) | INTEGRAL TRIP DEVICE* (Y-YES, N-NO) | INTEGRAL TRIP IS (S-STATIC, E-ELECTRO MECH) | EST. AVERAGE # OF NON-FAULT OPERATIONS/YEAR/BREAKER** | EST. AVERAGE # OF FAULT OPERATIONS/YEAR/BREAKER** | MAINTENANCE CYCLE (I-Insert Code) | MAINTENANCE QUALITY (I-Insert Code) | BRIEF DESCRIPTION OF MAINTENANCE |
| | | | | | | | | | | | | |
| | | | | | | | | | | | | |

* IF TRIP INITIATION UNIT IS AN INTEGRAL PART OF THE BREAKER, INCLUDE ANY FAILURE OF THE TRIP UNIT AS A BREAKER FAILURE.

** CONSIDER EACH OPEN/CLOSE CYCLE AS ONE (1) OPERATION. INCLUDE OPERATIONS DURING MAINTENANCE.

CIRCUIT BREAKER

COMPANY NAME AND PLANT: _____

FAILED UNIT DATA - Fill in One Line for Each Failure

| A | B | C | D | E | F | G | H | I | J | K |
|---|---|---|---|---|---|---|---|---|---|---|
| IDENTIFICATION NUMBER (FROM TOTAL POPULATION) | FAILURE DISCOVERED (INSERT CODE) | FAILURE INITIATING CAUSE (INSERT CODE) | FAILURE CONTRIBUTING CAUSE (INSERT CODE) | SUSPECTED FAILURE RESPONSIBILITY (INSERT CODE) | FAILURE MODE (INSERT CODE) | MONTHS SINCE LAST MAINTENANCE (INSERT CODE) | REPAIR URGENCY (INSERT CODE) | FAILURE DURATION-HOURS | REPAIR OR REPLACE (INSERT CODE) | FAILED COMPONENT |
| | | | | | | | | | | |

Copyright © 1998 IEEE. All rights reserved.

CIRCUIT BREAKER RELIABILITY SURVEY
SURVEY CODE

Total Population Form

Circuit breaker Type (B)
1. Air Magnetic
2. Vacuum
3. Bulk Oil
4. Air Blast
5. "Puffer" Type SF-6
6. All SF-6 other then "Puffer"
7. Other

Normal Maintenance Cycle (K)
1. 0-12 months
2. 12-24 months
3. Over 24 months
4. No preventive maintenance

Maintenance Quality (L)
Your estimate of Preventive Maintenance Quality:
1. Excellent
2. Fair
3. Poor
4. None

Failed Unit Form

Failure Discovered (B)
1. During Routine Testing/ Maintenance
2. During Normal Operation
3. Other

Failure Initiating Cause (C)
1. Transient overvoltage - such as lightning, switching surges, or system faults.
2. Insulation Breakdown.
3. Mechanical burnout, friction, or seizing of moving parts.
4. Mechanical breakdown - such as cracking, loosening, abrading, or deforming of static or structural parts.
5. Physical damage or shorting from outside source - such as vehicular accident.
6. Electrical fault or malfunction.
7. Malfunction of protective relay or tripping device.
8. Other auxiliary device Malfunction.
9. Low, or no, auxiliary voltage - for circuits such as air compressors, and SF-6 heaters.
10. Other

Failure Contributing Cause (D)
1. Overload - persistent
2. Extreme hear (ambient temperature if known ____ deg. C)
3. Extreme Cold (ambient temperature if known ____ deg. C)
4. Severe weather - such as wind, rain, snow, or sleet.
5. Abnormal moisture.
6. Aggressive chemicals.
7. Dust, salt spray, or other contaminant exposure.
8. Normal deterioration from age.
9. Lubricant loss, or deficiency.
10. Improper operating or test procedure.
11. Tripping source deficient.
12. Lack or preventive maintenance.
13. Other

Suspected Failure Responsibility (E)
1. Defective component
2. Improper handling/shipping
3. Poor installation/testing
4. Inadequate maintenance
5. Improper operation
6. Improper application
7. Inadequate physical protection
8. Outside agency (such as vehicular accident)
9. Other
10. Unknown

Failure Mode (F)
1. Failed to close on command
2. Failed to close and latch
3. Failed to open on command
4. Closes without command
5. Opens without command
6. Failed to break current when opened
7. Damaged while successfully opening
8. Damaged while closing
9. Failed to carry current
10. Fault to ground, or phase to phase (not while opening or closing)
11. Fault across open contacts (not while opening or closing)
12. Loss of vacuum (for vacuum breakers)
13. Other failure requiring removal from service within 30 minutes
14. Other failure not requiring immediate removal from service
15. Unknown

Months Since Last Maintenance (G)
1. 0 - 12 months
2. 12 - 24 months
3. Over 24 months
4. No preventive maintenance

Repair Urgency (H)
1. Working round-the-clock
2. Normal working hours
3. Low priority

Repair Or Replace (J)
1. Repaired failed component in place or sent out for repair
2. Replaced failed unit with spare
3. Other

## REFERENCES

[1] ANSI/IEEE Standard 493-1980, "IEEE Recommended Practice For Design of Reliable Industrial and Commercial Power Systems".



Copyright © 1998 IEEE. All rights reserved.

**Appendix L**
**Reliability Survey of 600 to 1800 kW Diesel and Gas-Turbine Generating Units**

**By**
**Clayton Smith and Michael Donovan**

***Conference Record of the IEEE Industrial and Commercial Power Systems Technical Conference***
**Chicago, IL, May 8-11, 1989**

*IEEE Transactions on Industry Applications*
Jul./Aug. 1990, pp. 741-755

Copyright © 1998 IEEE. All rights reserved.

This page is intentionally blank

# Reliability Survey of 600 to 1800 kW Diesel and Gas-Turbine Generating Units

CLAYTON A. SMITH, MICHAEL D. DONOVAN, ASSOCIATE MEMBER, IEEE, AND MICHAEL J. BARTOS

*Abstract*—**In 1988 the U.S. Army Engineering and Housing Support Center (EHSC) sponsored a study of the reliability, availability, and maintainability (RAM) characteristics of diesel and gas-turbine power systems producing less than 2 MW. The study, conducted by ARINC Research Corporation, included collection and examination of source data for power systems at commercial and military facilities operating in continuous or standby service. A data base of system, subsystem, and component RAM data was established. These data will be useful in the design of primary and standby power systems for military or commercial facilities.**

## INTRODUCTION

THE U.S. Army Engineering and Housing Support Center (EHSC) sponsored a study [7] of the reliability, availability, and maintainability (RAM) characteristics of small diesel and gas-turbine power systems. The study, conducted by ARINC Research, produced a data base of system, subsystem, and component RAM data for industrial and military power systems in both continuous and standby service. An updated RAM data base was needed to support the analysis of power systems at command, control, communications, and intelligence ($C^3I$) installations worldwide. EHSC wanted higher confidence in the validity of the power-system reliability data used to analyze $C^3I$ system reliability. Currently available RAM data were outdated and were not tailored to EHSC's specific requirements. Further, these data did not permit identifying component failure rates in alternative prime-mover designs.

The primary objective was to obtain data reflecting the reliability improvements resulting from advances in power-plant (prime-mover) technology since completion of the last comprehensive RAM study more than 15 years earlier. An additional objective was to provide data on the major components that failed in each system, together with data on the reliability of the prime mover. The information will be used in the evaluation of $C^3I$ power-generation systems.

The prime movers of interest were diesel and gas-turbine generators ranging from 600 to 1800 kW. The diesel-generator configurations evaluated included both packaged systems and units with auxiliary support systems. Each of these types was categorized as standby and continuous duty. Because most gas-turbine systems in the size range of interest are configured as packaged units, the gas-turbine generators were categorized only by type of duty. Thus six categories were addressed:

- continuous-duty auxiliary diesels,
- standby auxiliary diesels,
- continuous-duty package diesels,
- standby package diesels,
- continuous-duty gas turbines,
- standby gas turbines.

Paper ICPSD 89-02, approved by the Power Systems Engineering Committee of the IEEE Industry Applications Society for presentation at the 1989 Industrial and Commercial Power Systems Annual Technical Conference, Detroit, MI, April 29-May 3. Manuscript released for publications January 9, 1990.

C. A. Smith and M. D. Donovan are with ARINC Research Corporation, 2551 Riva Road, Annapolis, MD 21401.

M. J. Bartos is with the U.S. Army Engineering and Housing Support Center, Fort Belvoir, VA 20060.

IEEE Log Number 9035434.

## METHODOLOGY

The data collection comprised five tasks: 1) review existing data bases and reports, 2) identify data sources, 3) collect field data, 4) reduce data and prepare data base, and 5) calculate RAM statistics. These tasks are described in the following subsections.

### *Review Existing Data Bases and Reports*

The results of previous and ongoing efforts in the collection of RAM data were reviewed to determine their applicability to the selected diesel and gas-turbine categories. Data bases such as the Government Industry Data Exchange Program (GIDEP) [1] and the Institute of Nuclear Power Operations (INPO) Nuclear Plant Reliability Data System (NPRDS) [5] were investigated, but they were found to contain minimal detail on power plants in the size ranges addressed by the study. Several manufacturers provided the results of studies on reliability, starting reliability, and unit availability conducted in preparation for customer presentations or proposals. The RAM measures from these studies were not included in the data base, because the objectivity and accuracy of the data could not be validated.

### *Identify Candidate Data Sources*

Three methods were used to identify as candidate data sources the industrial and military facilities that operated diesel and gas-turbine power systems in the specified categories. Equipment manufacturers and distributors were asked to provide lists of customers having power systems that met the category definitions. U.S. military and Government agencies were similarly requested to provide names of equipment operators and sources of maintenance data. In addition, industrial directories were used to identify facilities representing typi-

Copyright © 1998 IEEE. All rights reserved.

**USER SURVEY: DIESEL AND GAS-TURBINE GENERATORS**

User/Company: _____

Address: _____

Contact: _____

Telephone: ( __ ) _____

Date: _____

Application: _____

Staffing (No. of personnel and titles): _____

_____

_____

Items to Address:

How many units do you have on-site: _____

What are their ratings? _____

Are units standby or in continuous use? _____

| | Yes | No |
|---|---|---|
| Is there a central data bank for maintenance information? | | |
| Do you collect maintenance data? | | |
| Do you collect operating data? | | |
| Do you record attempted and successful starts? | | |
| Do you keep logs for scheduled maintenance? | | |
| Do you have records of failure events? | | |
| Have there been at least five failures to the unit? | | |
| Do you track administrative and logistic time? | | |
| Can these data be sent to us for this effort? | | |
| Can ARINC Research obtain permission to review these records? | | |
| Is there a maintenance program in use? | | |
| If yes, is it the manufacturer's program? | | |
| Are spares kept on site? | | |

Remarks: (Include brief history and line diagram of plant)

User Code: _____

Fig. 1. User survey form.

cal power-system users, such as computer centers, small utility sites, and cogeneration plants. The candidate data sources identified through these surveys were listed in a project data base for sorting and screening during the data collection task.

*Collect Data*

Potential data sources were screened by means of a structured telephone survey technique, using the questions shown in Fig. 1, to identify candidate power plants for data collection. The objective of this screening was to determine the applicability, availability, and quality of operational, maintenance, and failure data. Plants were selected from a wide variety of applications (e.g., electric utilities, cogenerators, hospitals, airfields, military installations, and computer and communication facilities) to represent a range of variables such as manufacturer, plant usage, age, environment, and maintenance practices. Where possible, plants with at least ten years of operation and maintenance history were selected.

Selected power-plant operators with formal data collection systems were requested to mail facility descriptions and historical records of their operation and maintenance logs. Follow-up technical questions to clarify data interpretation were directed, via telephone conversations, to senior facility personnel.

The problem most frequently encountered in obtaining data from participating facilities was the level of effort required by the plant staff to assemble and reproduce the necessary records. To ensure the acquisition of representative data, site visits were made to facilities that could not respond to the mailing requests. Technical personnel experienced in plant operation and maintenance conducted these visits. In addition to records collection, visits typically included structured interviews with senior operations and maintenance personnel to obtain additional insights into failure events and maintenance tasks.

Twenty-two plants participated in the study, providing data on 71 power systems. The data represented 708 unit-years of operating experience, and all plants provided data for periods of 3 years or longer.

*Develop Data Base*

The source data on maintenance and failure events were arranged in a consistent record format for computer entry and validation. Data reduction was performed by examining events



Copyright © 1998 IEEE. All rights reserved.

TABLE I
RAM STATISTICS

| RAM Measures | Formula Based on Period Hours | Formula Based on Operating Hours |
|---|---|---|
| Failure Rate (FR) (Failures per year) | $\frac{\text{No. of Failures}}{\text{Period Hours}} \times 8{,}760$ | $\frac{\text{No. of Failures}}{\text{Operating Hours}} \times 8{,}760$ |
| Mean Time Between Failures (MTBF) (Hours) | $\frac{\text{Period Hours}}{\text{No. of Failures}}$ | $\frac{\text{Operating Hours}}{\text{No. of Failures}}$ |
| Mean Time To Repair (MTTR) (Hours) | $\frac{\text{Total Repair Time}}{\text{No. of Failures}}$ | $\frac{\text{Total Repair Hours}}{\text{No. of Failures}}$ |
| Mean Time Between Planned Outages (MTBPO) (Hours) | $\frac{\text{Period Hours}}{\text{No. of Planned Outages}}$ | $\frac{\text{Operating Hours}}{\text{No. of Planned Outages}}$ |
| Mean Time To Maintain (MTTM) (Hours) | $\frac{\text{Planned Outage Hours}}{\text{No. of Planned Outages}}$ | $\frac{\text{Planned Outage Hours}}{\text{No. of Planned Outages}}$ |
| Mean Time Between Outages (MTBO) (Hours) | $\frac{\text{Period Hours}}{\text{No. of Outages}}$ | $\frac{\text{Operating Hours}}{\text{No. of Outages}}$ |
| Mean Downtime (MDT) (Hours) | $\frac{\text{Repair Hours + Planned Outage Hours}}{\text{No. of Outages}}$ | $\frac{\text{Repair Hours + Planned Outage Hours}}{\text{No. of Outages}}$ |
| Mean Time Between Corrective Maintenance (MTBCM) (Hours) | $\frac{\text{Period Hours}}{\text{No. of CMs}}$ | $\frac{\text{Operating Hours}}{\text{No. of CMs}}$ |
| Mean Time To Perform Corrective Maintenance (MTTCM) (Hours) | $\frac{\text{Corrective Maintenance Hours}}{\text{No. of CMs}}$ | $\frac{\text{Corrective Maintenance Hours}}{\text{No. of CMs}}$ |
| Availability, Operational (AO) | $\frac{\text{Period Hours - Repair Time - Planned Outage Hours}}{\text{Period Hours}}$ | $\frac{\text{Operating Hours}}{\text{Operating Hours + Repair Hours + Planned Outage Hours}}$ |
| Availability, Inherent (AI) | $\frac{\text{Period Hours - Repair Hours}}{\text{Period Hours}}$ | $\frac{\text{Operating Hours}}{\text{Operating Hours + Repair Hours}}$ |
| Reliability for 24 hours (R24) | $e^{-24/\text{MTBF}}$ | $e^{-24/\text{MTBF}}$ |
| Reliability for 720 hours (R720) | $e^{-720/\text{MTBF}}$ | $e^{-720/\text{MTBF}}$ |

in the operating and maintenance records to identify the subsystem and component, the type of outage, the impact of the failure, and the action required to complete the maintenance. This information was coded according to the equipment, failure-impact, outage-type, and action codes listed in Appendix I.

Summary descriptions of each maintenance event were also prepared to provide insight into failure modes. Operating data for each unit—such as period hours, operating hours, starts, and start failures—were extracted from operating logs.

The event records produced by the data-reduction process were entered into a microcomputer data base. The data base architecture, developed with a commercially available data base management system, included features for automated checking for data-entry errors or inconsistencies. Following data entry, samples of records were randomly selected for validation against the raw data, ensuring consistency in application of the event coding scheme during data reduction.

### *Calculate RAM Statistics*

The maintenance-event and operational data and the formulas shown in Table I were used to calculate RAM statistics for each of the six categories of power systems. The terms used in the formulas are defined in Table II.

RAM statistics were also calculated for subsystems and components in each category on the basis of both period hours and unit operating hours. Subsystem and component measures included failure rate (FR), mean time between failures (MTBF), mean time between corrective maintenance (MTBCM), mean time to perform corrective maintenance (MTTCM), and operational availability (AO).

The RAM statistics are intended for use by EHSC for a variety of analyses, evaluations, and planning studies for $C^3I$ facility support systems. To meet the requirements of these applications, the RAM statistics were calculated using both period hours (i.e., calendar time) and operating hours.

## RESULTS

The data base developed contains more than 6000 maintenance events, representing 708 unit-years and nearly one million operating hours. Data from units within each of the six categories were combined, because units within the same category are of similar technology and utilization. The unit-level RAM statistics for the six major categories from this data base are compiled in Tables III and IV. Data for subsystems and components within these categories are presented in Appendix II.

Copyright © 1998 IEEE. All rights reserved.

TABLE II
DEFINITIONS OF TERMS

| | |
|---|---|
| Concurrent Maintenance Event (CC) | Maintenance action taken while unit is already in an outage |
| Corrective Maintenance Event (CM) | An event in which some equipment had to be repaired (outage-causing or not) |
| Corrective Maintenance Time | Time, in hours, required to complete a CM |
| Failure | An unexpected event that results in the interruption of electrical power at the generator output terminals |
| Forced-Outage Event (FO) | Failure |
| Noncurtailing Event (NC) | Maintenance action taken while the unit is available to produce power |
| Operating Hours | Number of hours the unit is producing power |
| Outage Event | Any interruption of electrical power at the generator output terminals |
| Period Hours (PH) | Number of calendar hours in a year (8,760) |
| Planned Outage Event (PO) | Outage taken for any scheduled reason (e.g., inspections, overhauls, cleaning) |
| Planned Outage Time | Time, in hours, taken to complete any planned outage event |
| Repair Time | Time, in hours, required to repair any failure |
| Unit-Years | Calendar hours in a year (8,760) multiplied by the number of units |

TABLE III
COMPOSITE RAM STATISTICS BASED ON PERIOD HOURS

| RAM Measures | Diesel Auxiliary | | Diesel Package | | Gas Turbine | |
|---|---|---|---|---|---|---|
| | Continuous | Standby | Continuous | Standby | Continuous | Standby |
| Number of Units | 7 | 5 | 9 | 15 | 15 | 20 |
| Period Hours | 674,520 | 1,357,800 | 814,776 | 1,068,594 | 333,888 | 1,951,224 |
| Number of Events | 1,702 | 1,408 | 1,535 | 498 | 509 | 319 |
| Unit Failures | 302 | 198 | 408 | 118 | 174 | 70 |
| Unit Outages (Planned and Forced) | 1,311 | 615 | 959 | 365 | 385 | 278 |
| Number of Corrective Maintenance Events | 409 | 630 | 812 | 243 | 253 | 102 |
| Failure Rate (Failures per Unit-Year) | 3.9 | 1.2 | 4.3 | 0.9 | 4.5 | 0.3 |
| MTBF (Hours) | 2,233.5 | 6,857.4 | 1,997.0 | 9,055.8 | 1,918.8 | 27,874.6 |
| MTTR (Hours) | 2.9 | 2.8 | 6.4 | 3.9 | 7.2 | 111.6 |
| MTBPO (Hours) | 668.5 | 3,256.1 | 1,478.7 | 4,326.2 | 1,582.4 | 9,380.8 |
| MTTM (Hours) | 1.3 | 3.8 | 12.5 | 7.8 | 21.1 | 10.6 |
| MTBO (Hours) | 514.5 | 2,207.8 | 849.6 | 2,927.7 | 867.2 | 7,018.8 |
| MDT (Hours) | 1.7 | 3.5 | 9.9 | 6.5 | 14.8 | 36.1 |
| MTBCM (Hours) | 1,699.1 | 2,155.2 | 923.3 | 4,897.5 | 1,319.7 | 19,129.6 |
| MTTCM (Hours) | 2.8 | 2.9 | 4.3 | 2.9 | 5.7 | 77.4 |
| AI | 0.9986 | 0.9995 | 0.9967 | 0.9995 | 0.9962 | 0.9959 |
| AO | 0.9965 | 0.9984 | 0.9882 | 0.9977 | 0.9828 | 0.9948 |
| R24 | 0.9893 | 0.9965 | 0.9880 | 0.9973 | 0.9875 | 0.9991 |
| R720 | 0.7244 | 0.9003 | 0.6973 | 0.9235 | 0.6871 | 0.9745 |

*Observations*

The objective of the study was to compile a data base for use in the evaluation of power systems in $C^3I$ facilities; thus no detailed analysis of the data was performed. However, some observations can be made from examination of the calculation results.

Table III indicates that, on the basis of period hours, units in the continuous-duty categories have similar failure rates. The period-based failure rates for the standby categories are much lower, because the low utilization of units in this category provides fewer opportunities for failures to occur.

The gas turbines exhibit the lowest failure rates of units in standby service. However, this is negated by long repair times. The raw data show that the large repair-time value is attributable to a relatively small number of long-duration events, including a main bearing failure (200 h), a reduction-gear failure (350 h), seven broker starter shafts (150 h each), and two events in which the turbine had to be sent back to the manufacturer (3000 h each). The starter-shaft problem was an initial design problem and has not occurred since the implementation of a design change to the part.

For the continuous-duty diesels with auxiliary systems, the failure rate based on operating hours, shown in Table IV, is significantly higher than that of the other categories in continuous service. This difference is attributable to the relatively low utilization of these diesels at the plants reporting in this category. These units were classified as continuous because they were scheduled for operation on a regular basis. However, most of them were operated in a cycling mode and operated only for several hours each day. The high failure rate results


Copyright © 1998 IEEE. All rights reserved.

TABLE IV
COMPOSITE RAM STATISTICS BASED ON OPERATING HOURS

| RAM Measures | Diesel Auxiliary | | Diesel Package | | Gas Turbine | |
|---|---|---|---|---|---|---|
| | Continuous | Standby | Continuous | Standby | Continuous | Standby |
| Number of Units | 7 | 5 | 9 | 15 | 15 | 20 |
| Operating Hours | 80,174 | 323,242 | 300,698 | 64,364 | 204,037 | 13,591 |
| Number of Events | 1,702 | 1,408 | 1,535 | 498 | 509 | 319 |
| Unit Failures | 302 | 198 | 408 | 118 | 174 | 70 |
| Unit Outages (Planned and Forced) | 1,311 | 615 | 959 | 365 | 385 | 278 |
| Number of Corrective Maintenance Events | 409 | 630 | 872 | 243 | 253 | 102 |
| Failure Rate (Failures per Unit-Year) | 32.9 | 5.3 | 11.8 | 16.0 | 7.4 | 45.1 |
| MTBF (Hours) | 264.4 | 1,632.5 | 737.0 | 545.4 | 1,172.6 | 194.1 |
| MTTR (Hours) | 2.9 | 2.8 | 6.4 | 3.9 | 7.2 | 111.6 |
| MTBPO (Hours) | 79.4 | 775.1 | 545.7 | 260.5 | 967.0 | 65.3 |
| MTTM (Hours) | 1.3 | 3.8 | 12.5 | 7.8 | 21.1 | 10.6 |
| MTBO (Hours) | 61.1 | 525.5 | 313.5 | 176.3 | 529.9 | 48.8 |
| MDT (Hours) | 1.7 | 3.5 | 9.9 | 6.5 | 14.8 | 36.1 |
| MTBCM (Hours) | 196.0 | 513.0 | 344.8 | 264.8 | 806.4 | 133.2 |
| MTTCM (Hours) | 2.8 | 2.9 | 4.3 | 2.9 | 5.7 | 77.4 |
| AI | 0.9889 | N/A | 0.9912 | N/A | 0.9938 | N/A |
| AO | 0.9713 | N/A | 0.9682 | N/A | 0.9720 | N/A |
| R24 | 0.9132 | 0.9854 | 0.9680 | 0.9569 | 0.9797 | 0.8837 |
| R720 | 0.0657 | 0.6434 | 0.3765 | 0.2671 | 0.5412 | 0.0245 |

from dividing the large number of failures induced in this type of operation by the relatively small number of operating hours.

Similarly, for the gas turbines in standby service, the high failure rate based on operating hours can be attributed to the relatively low utilization of these units. Most of the units in this category are used as emergency power supplies in computer or communications facilities. They are typically tested on a weekly or monthly basis and run for less than 1 h, with failures most likely to occur during the start sequence. On the basis of this limited operating time, the failure rate is high.

The subsystem and component data presented in Appendix II provide information on the causes of unit failures and unavailability. For example, problems with the standby gas turbines reside mostly in the starting system, particularly the battery. The fuel system, the generator, and the controls add to the overall failure rate. It is also of interest that much of the unavailability is due to inspection and cleaning actions, even though these actions do not contribute to the overall failure rate. For the continuous-duty auxiliary diesels, the failure rate is due largely to the engine itself, specifically the cylinder heads and the crankcase. Tracking these same components through all of the diesel categories shows them to have consistently the highest failure rate.

### SUMMARY

Information collected through this study is useful in the design assessment of primary and standby power systems for military or commercial facilities. The unit-level RAM statistics for the six categories provide a baseline for comparison of RAM measures for a specific plant against a representative population similar in configuration and type of service. The subsystem and component data, in conjunction with appropriate modeling tools, provide a means for forecasting the availability performance of specific plant designs. Since the data base includes all component maintenance events rather than just outage failures, it provides information that will be useful in maintenance and logistic planning for power systems.

TABLE V
ACTION, FAILURE-IMPACT, AND OUTAGE-TYPE CODES

Action Codes

CL — Cleaned
FL — Fixed Leak
IN — Inspection
MD — Modification
NA — No Action Taken
OV — Overhaul
PM — Preventive Maintenance
RA — Repaired
RC — Recalibrated
TS — Tested

Failure Impact

0 — No Failure
1 — Failure Affected Only the Component
2 — Failure Affected Component and Subsystem
3 — Failure Affected Component, Subsystem, and Unit

Outage Type

CC — Concurrent Maintenance
FO — Forced Outage
FS — Failure to Start
NC — Noncurtailing Maintenance
PO — Planned Outage

## APPENDIX I

### CODES

Failure-impact, outage-type, and the action codes are listed in Table V.

## APPENDIX II

### SUBSYSTEM AND COMPONENT DATA

Tables VI–XI reflect the RAM statistics based on equipment failure maintenance events for the units within the six categories. Components or subsystems that do not appear in a table did not experience any failure or maintenance events.

Copyright © 1998 IEEE. All rights reserved.

TABLE VI
SUBSYSTEM AND COMPONENT RAM MEASURES FOR CONTINUOUS-DUTY AUXILIARY DIESELS

| Equipment | Period Hours | | | | | Operating Hours | | | |
|---|---|---|---|---|---|---|---|---|---|
| | Failures per Year | MTBF (Hours) | MTBCM (Hours) | MTTCM (Hours) | Operational Availability | Failures per Year | MTBF (Hours) | MTBCM (Hours) | MTTCM (Hours) |
| CONTROL & INSTRUMENTATION (DS-CTI) | 0.08 | 112420.0 | 112420.0 | 1.7 | 1.0000 | 0.66 | 13362.3 | 13362.3 | 1.7 |
| CIRCUIT BREAKERS (DS-CTI01) | 0.05 | 168630.0 | 168630.0 | 1.5 | 1.0000 | 0.44 | 20043.5 | 20043.5 | 1.5 |
| ELECTRICAL MODULE (DS-CTI02) | 0.01 | 674520.0 | 674520.0 | 1.0 | 1.0000 | 0.11 | 80174.0 | 80174.0 | 1.0 |
| SWITCHES (DS-CTI04) | 0.01 | 674520.0 | 674520.0 | 3.0 | 1.0000 | 0.11 | 80174.0 | 80174.0 | 3.0 |
| COOLING WATER SYSTEM (DS-CWT) | 0.13 | 67452.0 | 44968.0 | 1.7 | 1.0000 | 1.09 | 8017.4 | 5344.9 | 1.7 |
| COOLING WATER PUMP (DS-CWT02) | 0.00 | 0.0 | 674520.0 | 0.5 | 1.0000 | 0.00 | 0.0 | 80174.0 | 0.5 |
| ENGINE COOLING (DS-CWT03) | 0.01 | 674520.0 | 674520.0 | 4.0 | 1.0000 | 0.11 | 80174.0 | 80174.0 | 4.0 |
| THERMOSTAT (DS-CWT05) | 0.00 | 0.0 | 674520.0 | 1.0 | 1.0000 | 0.00 | 0.0 | 80174.0 | 1.0 |
| VALVES (DS-CWT07) | 0.01 | 674520.0 | 337260.0 | 0.8 | 1.0000 | 0.11 | 80174.0 | 40087.0 | 0.8 |
| WATER LINE (DS-CWT09) | 0.06 | 134904.0 | 96360.0 | 0.9 | 1.0000 | 0.55 | 16034.8 | 11453.4 | 0.9 |
| HEAT EXCHANGER (DS-CWT10) | 0.03 | 337260.0 | 337260.0 | 5.0 | 1.0000 | 0.22 | 40087.0 | 40087.0 | 5.0 |
| WATER HEADER (DS-CWT12) | 0.01 | 674520.0 | 674520.0 | 2.0 | 1.0000 | 0.11 | 80174.0 | 80174.0 | 2.0 |
| WATER MANIFOLD (DS-CWT13) | 0.00 | 0.0 | 0.0 | 0.0 | 1.0000 | 0.00 | 0.0 | 0.0 | 0.0 |
| DIESEL ENGINE (DS-ENG) | 2.25 | 3899.0 | 3122.8 | 3.6 | 0.9984 | 18.90 | 463.4 | 371.2 | 3.6 |
| BEARINGS (DS-ENG01) | 0.08 | 112420.0 | 74946.7 | 2.9 | 0.9999 | 0.66 | 13362.3 | 8908.2 | 2.9 |
| CYLINDER (DS-ENG02) | 0.32 | 26980.8 | 20440.0 | 2.0 | 0.9999 | 2.73 | 3207.0 | 2429.5 | 2.0 |
| CYLINDER HEADS (DS-ENG03) | 0.99 | 8875.3 | 8225.9 | 4.0 | 0.9995 | 8.30 | 1054.9 | 977.7 | 4.0 |
| DRIVE SHAFT (DS-ENG04) | 0.00 | 0.0 | 0.0 | 0.0 | 1.0000 | 0.00 | 0.0 | 0.0 | 0.0 |
| PISTONS (DS-ENG06) | 0.26 | 33726.0 | 28105.0 | 4.7 | 0.9998 | 2.19 | 4008.7 | 3340.6 | 4.7 |
| TURBO CHARGER (DS-ENG07) | 0.01 | 674520.0 | 337260.0 | 4.0 | 1.0000 | 0.11 | 80174.0 | 40087.0 | 4.0 |
| VALVES (DS-ENG08) | 0.03 | 337260.0 | 224840.0 | 2.0 | 1.0000 | 0.22 | 40087.0 | 26724.7 | 2.0 |
| RINGS (DS-ENG09) | 0.31 | 28105.0 | 18230.3 | 3.5 | 0.9996 | 2.62 | 3340.6 | 2166.9 | 3.5 |
| TIMING (DS-ENG10) | 0.05 | 168630.0 | 134904.0 | 1.0 | 0.9998 | 0.44 | 20043.5 | 16034.8 | 1.0 |
| INTAKE MANIFOLD (DS-ENG11) | 0.08 | 112420.0 | 112420.0 | 3.2 | 1.0000 | 0.66 | 13362.3 | 13362.3 | 3.2 |
| CRANKCASE (DS-ENG12) | 0.01 | 674520.0 | 224840.0 | 15.0 | 0.9999 | 0.11 | 80174.0 | 26724.7 | 15.0 |
| RODS (DS-ENG14) | 0.01 | 674520.0 | 224840.0 | 3.7 | 1.0000 | 0.11 | 80174.0 | 26724.7 | 3.7 |
| CAM (DS-ENG15) | 0.08 | 112420.0 | 96360.0 | 2.0 | 0.9999 | 0.66 | 13362.3 | 11453.4 | 2.0 |
| CHAIN DRIVE (DS-ENG17) | 0.01 | 674520.0 | 337260.0 | 1.0 | 1.0000 | 0.11 | 80174.0 | 40087.0 | 1.0 |
| TAPPET (DS-ENG18) | 0.00 | 0.0 | 0.0 | 0.0 | 1.0000 | 0.00 | 0.0 | 0.0 | 0.0 |
| EXHAUST SYSTEM (DS-EXH) | 0.04 | 224840.0 | 96360.0 | 2.1 | 0.9997 | 0.33 | 26724.7 | 11453.4 | 2.1 |
| EXHAUST SYSTEM (DS-EXH) | 0.00 | 0.0 | 0.0 | 0.0 | 1.0000 | 0.00 | 0.0 | 0.0 | 0.0 |
| EXPANSION JOINTS (DS-EXH03) | 0.00 | 0.0 | 337260.0 | 4.0 | 1.0000 | 0.00 | 0.0 | 40087.0 | 4.0 |
| PORTS (DS-EXH05) | 0.01 | 674520.0 | 674520.0 | 0.5 | 0.9997 | 0.11 | 80174.0 | 80174.0 | 0.5 |
| EXHAUST MANIFOLD (DS-EXH06) | 0.03 | 337260.0 | 337260.0 | 0.5 | 1.0000 | 0.22 | 40087.0 | 40087.0 | 0.5 |
| EXHAUST VALVE (DS-EXH07) | 0.00 | 0.0 | 674520.0 | 1.0 | 1.0000 | 0.00 | 0.0 | 80174.0 | 1.0 |
| MUFFLER (DS-EXH10) | 0.00 | 0.0 | 674520.0 | 4.0 | 1.0000 | 0.00 | 0.0 | 80174.0 | 4.0 |
| FUEL SYSTEM (DS-FLS) | 0.91 | 9636.0 | 8225.9 | 2.1 | 0.9989 | 7.65 | 1145.3 | 977.7 | 2.1 |
| DEAERATOR TANK (DS-FLS02) | 0.00 | 0.0 | 674520.0 | 1.0 | 1.0000 | 0.00 | 0.0 | 80174.0 | 1.0 |
| FUEL FILTER (DS-FLS03) | 0.00 | 0.0 | 337260.0 | 1.0 | 1.0000 | 0.00 | 0.0 | 40087.0 | 1.0 |
| GOVERNOR (DS-FLS04) | 0.12 | 74946.7 | 67452.0 | 3.2 | 0.9997 | 0.98 | 8908.2 | 8017.4 | 3.2 |
| PUMPS (DS-FLS06) | 0.35 | 24982.2 | 21758.7 | 1.8 | 0.9999 | 2.95 | 2969.4 | 2586.3 | 1.8 |
| VALVES (DS-FLS07) | 0.01 | 674520.0 | 674520.0 | 1.5 | 1.0000 | 0.11 | 80174.0 | 80174.0 | 1.5 |
| INJECTOR (DS-FLS08) | 0.21 | 42157.5 | 39677.6 | 2.5 | 0.9994 | 1.75 | 5010.9 | 4716.1 | 2.5 |
| FUEL LINE (DS-FLS09) | 0.22 | 39677.6 | 37473.3 | 1.8 | 1.0000 | 1.86 | 4716.1 | 4454.1 | 1.8 |
| FUEL OIL REGULATOR (DS-FLS10) | 0.00 | 0.0 | 337260.0 | 2.0 | 1.0000 | 0.00 | 0.0 | 40087.0 | 2.0 |
| GENERATOR (DS-GNR) | 0.09 | 96360.0 | 74946.7 | 2.2 | 0.9999 | 0.76 | 11453.4 | 8908.2 | 2.2 |
| GENERATOR (DS-GNR) | 0.00 | 0.0 | 0.0 | 0.0 | 1.0000 | 0.00 | 0.0 | 0.0 | 0.0 |
| BEARINGS (DS-GNR01) | 0.00 | 0.0 | 0.0 | 0.0 | 1.0000 | 0.00 | 0.0 | 0.0 | 0.0 |
| FIELD (DS-GNR05) | 0.05 | 168630.0 | 112420.0 | 1.8 | 1.0000 | 0.44 | 20043.5 | 13362.3 | 1.8 |
| FLYWHEEL (DS-GNR10) | 0.04 | 224840.0 | 224840.0 | 3.0 | 1.0000 | 0.33 | 26724.7 | 26724.7 | 3.0 |
| INSULATION (DS-GNR11) | 0.00 | 0.0 | 0.0 | 0.0 | 1.0000 | 0.00 | 0.0 | 0.0 | 0.0 |
| COLLECTOR RINGS (DS-GNR12) | 0.00 | 0.0 | 0.0 | 0.0 | 1.0000 | 0.00 | 0.0 | 0.0 | 0.0 |
| LUBE OIL/HYDRAULIC SYSTEM (DS-LBO) | 0.25 | 35501.1 | 19272.0 | 2.5 | 0.9998 | 2.08 | 4219.7 | 2290.7 | 2.5 |
| LUBE OIL/HYDRAULIC SYSTEM (DS-LBO) | 0.00 | 0.0 | 0.0 | 0.0 | 1.0000 | 0.00 | 0.0 | 0.0 | 0.0 |
| COOLER (DS-LBO02) | 0.16 | 56210.0 | 56210.0 | 3.8 | 0.9999 | 1.31 | 6681.2 | 6681.2 | 3.8 |
| FILTER (DS-LBO04) | 0.00 | 0.0 | 74946.7 | 0.8 | 1.0000 | 0.00 | 0.0 | 8908.2 | 0.8 |
| PIPING (DS-LBO06) | 0.01 | 674520.0 | 337260.0 | 2.0 | 1.0000 | 0.11 | 80174.0 | 40087.0 | 2.0 |
| STRAINER (DS-LBO10) | 0.01 | 674520.0 | 134904.0 | 1.4 | 1.0000 | 0.11 | 80174.0 | 16034.8 | 1.4 |
| LUBRICATOR (DS-LBO12) | 0.06 | 134904.0 | 96360.0 | 3.3 | 1.0000 | 0.55 | 6034.8 | 11453.4 | 3.3 |
| STARTING SYSTEM (DS-STS) | 0.18 | 48180.0 | 17295.4 | 1.6 | 0.9999 | 1.53 | 5726.7 | 2055.7 | 1.6 |
| AIR FILTER (DS-STS04) | 0.00 | 0.0 | 26980.8 | 1.4 | 1.0000 | 0.00 | 0.0 | 3207.0 | 1.4 |
| AIR CYLINDER (DS-STS05) | 0.00 | 0.0 | 0.0 | 0.0 | 1.0000 | 0.00 | 0.0 | 0.0 | 0.0 |
| STARTING AIR ELBOW (DS-STS06) | 0.13 | 67452.0 | 67452.0 | 2.2 | 1.0000 | 1.09 | 8017.4 | 8017.4 | 2.2 |
| AIR LINE (DS-STS07) | 0.03 | 337260.0 | 337260.0 | 1.0 | 1.0000 | 0.22 | 40087.0 | 40087.0 | 1.0 |
| VALVES (DS-STS08) | 0.03 | 337260.0 | 337260.0 | 2.5 | 1.0000 | 0.22 | 40087.0 | 40087.0 | 2.5 |
| GOVERNOR BOOSTER (DS-STS13) | 0.00 | 0.0 | 0.0 | 0.0 | 1.0000 | 0.00 | 0.0 | 0.0 | 0.0 |



Copyright © 1998 IEEE. All rights reserved.

TABLE VII
SUBSYSTEM AND COMPONENT RAM MEASURES FOR STABILITY AUXILIARY DIESELS

| Equipment | Period Hours | | | | | Operating Hours | | | |
|---|---|---|---|---|---|---|---|---|---|
| | Failures per Year | MTBF (Hours) | MTBCM (Hours) | MTTCM (Hours) | Operational Availability | Failures per Year | MTBF (Hours) | MTBCM (Hours) | MTTCM (Hours) |
| CONTROL & INSTRUMENTATION (DS-CTI) | 0.01 | 678900.0 | 452600.0 | 1.7 | 1.0000 | 0.05 | 161621.0 | 107747.3 | 1.7 |
| CIRCUIT BREAKERS (DS-CTI01) | 0.01 | 1357800.0 | 1357800.0 | 2.0 | 1.0000 | 0.03 | 323242.0 | 323242.0 | 2.0 |
| GAUGES (DS-CTI03) | 0.01 | 1357800.0 | 678900.0 | 1.5 | 1.0000 | 0.03 | 323242.0 | 161621.0 | 1.5 |
| SWITCHES (DS-CTI04) | 0.00 | 0.0 | 0.0 | 0.0 | 1.0000 | 0.00 | 0.0 | 0.0 | 0.0 |
| COOLING WATER SYSTEM (DS-CWT) | 0.05 | 193971.4 | 135780.0 | 1.8 | 1.0000 | 0.19 | 46177.4 | 32324.2 | 1.8 |
| AIR COOLER (DS-CWT01) | 0.01 | 1357800.0 | 1357800.0 | 1.0 | 1.0000 | 0.03 | 323242.0 | 323242.0 | 1.0 |
| COOLING WATER PUMP (DS-CWT02) | 0.01 | 678900.0 | 271560.0 | 1.8 | 1.0000 | 0.05 | 161621.0 | 64648.4 | 1.8 |
| COOLING TOWERS (DS-CWT08) | 0.01 | 1357800.0 | 1357800.0 | 2.0 | 1.0000 | 0.03 | 323242.0 | 323242.0 | 2.0 |
| HEAT EXCHANGER (DS-CWT10) | 0.02 | 452600.0 | 452600.0 | 1.8 | 1.0000 | 0.08 | 107747.3 | 107747.3 | 1.8 |
| DIESEL ENGINE (DS-ENG) | 0.64 | 13715.2 | 4437.3 | 3.8 | 0.9988 | 2.68 | 3265.1 | 1056.3 | 3.8 |
| DIESEL ENGINE (DS-ENG) | 0.01 | 1357800.0 | 1357800.0 | 0.0 | 0.9998 | 0.03 | 323242.0 | 323242.0 | 0.0 |
| BEARINGS (DS-ENG01) | 0.10 | 84862.5 | 38794.3 | 2.4 | 1.0000 | 0.43 | 20202.6 | 9235.5 | 2.4 |
| CYLINDER (DS-ENG02) | 0.05 | 193971.4 | 150866.7 | 2.8 | 1.0000 | 0.19 | 46177.4 | 35915.8 | 2.8 |
| CYLINDER HEADS (DS-ENG03) | 0.12 | 71463.2 | 52223.1 | 3.4 | 0.9999 | 0.51 | 17012.7 | 12432.4 | 3.4 |
| PISTONS (DS-ENG06) | 0.19 | 45260.0 | 9236.7 | 4.4 | 0.9992 | 0.81 | 10774.7 | 2198.9 | 4.4 |
| VALVES (DS-ENG08) | 0.01 | 1357800.0 | 271560.0 | 2.5 | 1.0000 | 0.03 | 323242.0 | 64648.4 | 2.5 |
| RINGS (DS-ENG09) | 0.15 | 59034.8 | 16972.5 | 3.6 | 0.9999 | 0.62 | 14054.0 | 4040.5 | 3.6 |
| INTAKE MANIFOLD (DS-ENG11) | 0.01 | 1357800.0 | 1357800.0 | 2.0 | 1.0000 | 0.03 | 323242.0 | 323242.0 | 2.0 |
| CRANKCASE (DS-ENG12) | 0.00 | 0.0 | 1357800.0 | 4.0 | 1.0000 | 0.00 | 0.0 | 323242.0 | 4.0 |
| CAM (DS-ENG15) | 0.01 | 1357800.0 | 1357800.0 | 8.0 | 1.0000 | 0.03 | 323242.0 | 323242.0 | 8.0 |
| EXHAUST SYSTEM (DS-EXH) | 0.03 | 339450.0 | 79870.6 | 1.9 | 0.9999 | 0.11 | 80810.5 | 19014.2 | 1.9 |
| EXHAUST SYSTEM (DS-EXH) | 0.00 | 0.0 | 0.0 | 0.0 | 1.0000 | 0.00 | 0.0 | 0.0 | 0.0 |
| EXHAUST MANIFOLD (DS-EXH06) | 0.00 | 0.0 | 1357800.0 | 2.0 | 1.0000 | 0.00 | 0.0 | 323242.0 | 2.0 |
| EXHAUST VALVE (DS-EXH07) | 0.02 | 52600.0 | 90520.0 | 1.9 | 1.0000 | 0.08 | 107747.3 | 21549.5 | 1.9 |
| HEADER (DS-EXH09) | 0.00 | 0.0 | 0.0 | 0.0 | 1.0000 | 0.00 | 0.0 | 0.0 | 0.0 |
| MUFFLER (DS-EXH10) | 0.01 | 1357800.0 | 1357800.0 | 1.5 | 1.0000 | 0.03 | 323242.0 | 323242.0 | 1.5 |
| FUEL SYSTEM (DS-FLS) | 0.41 | 21552.4 | 7339.5 | 2.7 | 0.9998 | 1.71 | 5130.8 | 1747.3 | 2.7 |
| FUEL SYSTEM (DS-FLS) | 0.00 | 0.0 | 0.0 | 0.0 | 1.0000 | 0.00 | 0.0 | 0.0 | 0.0 |
| FUEL FILTER (DS-FLS03) | 0.02 | 452600.0 | 21552.4 | 1.1 | 1.0000 | 0.08 | 107747.3 | 5130.8 | 1.1 |
| GOVERNOR (DS-FLS04) | 0.05 | 193971.4 | 169725.0 | 3.0 | 1.0000 | 0.19 | 6177.4 | 40405.2 | 3.0 |
| PUMPS (DS-FLS06) | 0.06 | 135780.0 | 113150.0 | 2.2 | 1.0000 | 0.27 | 32324.2 | 26936.8 | 2.2 |
| INJECTOR (DS-FLS08) | 0.25 | 35731.6 | 13997.9 | 3.7 | 0.9999 | 1.03 | 8506.4 | 3332.4 | 3.7 |
| FUEL LINE (DS-FLS09) | 0.03 | 271560.0 | 271560.0 | 2.6 | 1.0000 | 0.14 | 64648.4 | 64648.4 | 2.6 |
| FUEL OIL REGULATOR (DS-FLS10) | 0.00 | 0.0 | 0.0 | 0.0 | 1.0000 | 0.00 | 0.0 | 0.0 | 0.0 |
| GENERATOR (DS-GNR) | 0.06 | 135780.0 | 123436.4 | 2.3 | 1.0000 | 0.27 | 32324.2 | 29385.6 | 2.3 |
| GENERATOR (DS-GNR) | 0.00 | 0.0 | 0.0 | 0.0 | 1.0000 | 0.00 | 0.0 | 0.0 | 0.0 |
| BEARINGS (DS-GNR01) | 0.02 | 452600.0 | 339450.0 | 2.2 | 1.0000 | 0.08 | 107747.3 | 80810.5 | 2.2 |
| FIELD (DS-GNR05) | 0.04 | 226300.0 | 226300.0 | 2.2 | 1.0000 | 0.16 | 53873.7 | 53873.7 | 2.2 |
| COLLECTOR RINGS (DS-GNR12) | 0.01 | 1357800.0 | 1357800.0 | 3.0 | 1.0000 | 0.03 | 323242.0 | 323242.0 | 3.0 |
| LUBE OIL/HYDRAULIC SYSTEM (DS-LBO) | 0.06 | 135780.0 | 64657.1 | 1.2 | 0.9999 | 0.27 | 32324.2 | 15392.5 | 1.2 |
| LUBE OIL/HYDRAULIC SYSTEM (DS-LBO) | 0.00 | 0.0 | 0.0 | 0.0 | 1.0000 | 0.00 | 0.0 | 0.0 | 0.0 |
| COOLER (DS-LBO02) | 0.00 | 0.0 | 0.0 | 0.0 | 1.0000 | 0.00 | 0.0 | 0.0 | 0.0 |
| FILTER (DS-LBO04) | 0.01 | 1357800.0 | 113150.0 | 0.9 | 1.0000 | 0.03 | 323242.0 | 26936.8 | 0.9 |
| PUMP (DS-LBO05) | 0.05 | 193971.4 | 193971.4 | 1.6 | 1.0000 | 0.19 | 6177.4 | 46177.4 | 1.6 |
| TANK (DS-LBO08) | 0.01 | 1357800.0 | 1357800.0 | 2.0 | 1.0000 | 0.03 | 323242.0 | 323242.0 | 2.0 |
| STRAINER (DS-LBO10) | 0.00 | 0.0 | 0.0 | 0.0 | 1.0000 | 0.00 | 0.0 | 0.0 | 0.0 |
| OIL SWITCH (DS-LBO14) | 0.01 | 1357800.0 | 1357800.0 | 1.0 | 1.0000 | 0.03 | 323242.0 | 323242.0 | 1.0 |
| STARTING SYSTEM (DS-STS) | 0.02 | 452600.0 | 17407.7 | 1.0 | 1.0000 | 0.08 | 107747.3 | 4144.1 | 1.0 |
| AIR FILTER (DS-STS04) | 0.00 | 0.0 | 18104.0 | 1.0 | 1.0000 | 0.00 | 0.0 | 4309.9 | 1.0 |
| VALVES (DS-STS08) | 0.02 | 452600.0 | 452600.0 | 1.7 | 1.0000 | 0.08 | 107747.3 | 107747.3 | 1.7 |

Copyright © 1998 IEEE. All rights reserved.

TABLE VIII
SUBSYSTEM AND COMPONENT RAM MEASURES FOR CONTINUOUS-DUTY PACKAGE DIESELS

| Equipment | Period Hours | | | | | Operating Hours | | | |
|---|---|---|---|---|---|---|---|---|---|
| | Failures per Year | MTBF (Hours) | MTBCM (Hours) | MTTCM (Hours) | Operational Availability | Failures per Year | MTBF (Hours) | MTBCM (Hours) | MTTCM (Hours) |
| BALANCE OF PLANT (DS-BOP) | 0.02 | 407388.0 | 271592.0 | 0.3 | 1.0000 | 0.06 | 150349.0 | 100232.7 | 0.3 |
| BALANCE OF PLANT (DS-BOP) | 0.00 | 0.0 | 0.0 | 0.0 | 1.0000 | 0.00 | 0.0 | 0.0 | 0.0 |
| COMBUSTION GAS MONITORING (DS-BOP01) | 0.01 | 814776.0 | 814776.0 | 0.0 | 1.0000 | 0.03 | 300698.0 | 300698.0 | 0.0 |
| ENCLOSURES (DS-BOP02) | 0.00 | 0.0 | 814776.0 | 1.0 | 1.0000 | 0.00 | 0.0 | 300698.0 | 1.0 |
| FIRE SUPPRESSION/DETECTION (DS-BOP03) | 0.01 | 814776.0 | 814776.0 | 0.0 | 1.0000 | 0.03 | 300698.0 | 300698.0 | 0.0 |
| CONTROL & INSTRUMENTATION (DS-CTI) | 0.12 | 74070.5 | 28095.7 | 3.0 | 0.9999 | 0.32 | 27336.2 | 10368.9 | 3.0 |
| CONTROL & INSTRUMENTATION (DS-CTI) | 0.00 | 0.0 | 407388.0 | 1.5 | 1.0000 | 0.00 | 0.0 | 150349.0 | 1.5 |
| CIRCUIT BREAKERS (DS-CTI01) | 0.00 | 0.0 | 814776.0 | 1.0 | 1.0000 | 0.00 | 0.0 | 300698.0 | 1.0 |
| ELECTRICAL MODULE (DS-CTI02) | 0.04 | 203694.0 | 162955.2 | 4.5 | 1.0000 | 0.12 | 75174.5 | 60139.6 | 4.5 |
| GAUGES (DS-CTI03) | 0.04 | 203694.0 | 47928.0 | 1.2 | 1.0000 | 0.12 | 75174.5 | 17688.1 | 1.2 |
| SWITCHES (DS-CTI04) | 0.01 | 814776.0 | 407388.0 | 5.7 | 1.0000 | 0.03 | 300698.0 | 150349.0 | 5.7 |
| WIRING (DS-CTI05) | 0.02 | 407388.0 | 407388.0 | 14.0 | 1.0000 | 0.06 | 150349.0 | 150349.0 | 14.0 |
| COOLING WATER SYSTEM (DS-CWT) | 0.43 | 20369.4 | 10720.7 | 1.6 | 0.9998 | 1.17 | 7517.4 | 3956.6 | 1.6 |
| COOLING WATER SYSTEM (DS-CWT) | 0.01 | 814776.0 | 814776.0 | 5.6 | 1.0000 | 0.03 | 300698.0 | 300698.0 | 5.6 |
| COOLING WATER PUMP (DS-CWT02) | 0.13 | 67898.0 | 37035.3 | 2.2 | 0.9999 | 0.35 | 25058.2 | 13668.1 | 2.2 |
| ENGINE COOLING (DS-CWT03) | 0.22 | 40738.8 | 23964.0 | 1.2 | 0.9999 | 0.58 | 15034.9 | 8844.1 | 1.2 |
| THERMOSTAT (DS-CWT05) | 0.01 | 814776.0 | 162955.2 | 1.3 | 1.0000 | 0.03 | 300698.0 | 60139.6 | 1.3 |
| TURBO CHARGER COOLING (DS-CWT06) | 0.00 | 0.0 | 814776.0 | 2.0 | 1.0000 | 0.00 | 0.0 | 300698.0 | 2.0 |
| VALVES (DS-CWT07) | 0.01 | 814776.0 | 407388.0 | 1.5 | 1.0000 | 0.03 | 300698.0 | 150349.0 | 1.5 |
| COOLING TOWERS (DS-CWT08) | 0.01 | 814776.0 | 407388.0 | 1.0 | 1.0000 | 0.03 | 300698.0 | 150349.0 | 1.0 |
| WATER LINE (DS-CWT09) | 0.02 | 407388.0 | 135796.0 | 2.1 | 1.0000 | 0.06 | 150349.0 | 50116.3 | 2.1 |
| HEAT EXCHANGER (DS-CWT10) | 0.01 | 814776.0 | 814776.0 | 1.0 | 1.0000 | 0.03 | 300698.0 | 300698.0 | 1.0 |
| WATER HEADER (DS-CWT12) | 0.00 | 0.0 | 814776.0 | 2.0 | 1.0000 | 0.00 | 0.0 | 300698.0 | 2.0 |
| WATER MANIFOLD (DS-CWT13) | 0.01 | 814776.0 | 814776.0 | 1.0 | 1.0000 | 0.03 | 300698.0 | 300698.0 | 1.0 |
| DIESEL ENGINE (DS-ENG) | 1.91 | 4577.4 | 3409.1 | 8.5 | 0.9902 | 5.19 | 1689.3 | 1258.2 | 8.5 |
| DIESEL ENGINE (DS-ENG) | 0.04 | 203694.0 | 135796.0 | 9.7 | 0.9950 | 0.12 | 75174.5 | 50116.3 | 9.7 |
| BEARINGS (DS-ENG01) | 0.09 | 101847.0 | 81477.6 | 8.9 | 0.9999 | 0.23 | 37587.2 | 30069.8 | 8.9 |
| CYLINDER (DS-ENG02) | 0.30 | 29099.1 | 19399.4 | 4.3 | 0.9999 | 0.82 | 10739.2 | 7159.5 | 4.3 |
| CYLINDER HEADS (DS-ENG03) | 0.77 | 11316.3 | 10445.8 | 10.7 | 0.9968 | 2.10 | 4176.4 | 3855.1 | 10.7 |
| DRIVE SHAFT (DS-ENG04) | 0.02 | 407388.0 | 271592.0 | 30.0 | 0.9999 | 0.06 | 150349.0 | 100232.7 | 30.0 |
| PISTONS (DS-ENG06) | 0.22 | 40738.8 | 32591.0 | 2.9 | 0.9999 | 0.58 | 15034.9 | 12027.9 | 2.9 |
| TURBO CHARGER (DS-ENG07) | 0.14 | 62675.1 | 35425.0 | 3.6 | 0.9995 | 0.38 | 23130.6 | 13073.8 | 3.6 |
| VALVES (DS-ENG08) | 0.02 | 407388.0 | 203694.0 | 3.8 | 1.0000 | 0.06 | 150349.0 | 75174.5 | 3.8 |
| RINGS (DS-ENG09) | 0.04 | 203694.0 | 81477.6 | 8.3 | 1.0000 | 0.12 | 75174.5 | 30069.8 | 8.3 |
| TIMING (DS-ENG10) | 0.00 | 0.0 | 0.0 | 0.0 | 1.0000 | 0.00 | 0.0 | 0.0 | 0.0 |
| INTAKE MANIFOLD (DS-ENG11) | 0.05 | 162955.2 | 135796.0 | 9.9 | 0.9999 | 0.15 | 60139.6 | 50116.3 | 9.9 |
| CRANKCASE (DS-ENG12) | 0.10 | 90530.7 | 90530.7 | 5.6 | 0.9998 | 0.26 | 33410.9 | 33410.9 | 15.6 |
| RODS (DS-ENG14) | 0.02 | 407388.0 | 407388.0 | 21.5 | 0.9999 | 0.06 | 50349.0 | 150349.0 | 21.5 |
| CAM (DS-ENG15) | 0.08 | 116396.6 | 58198.3 | 14.1 | 0.9998 | 0.20 | 42956.9 | 21478.4 | 14.1 |
| CHAIN DRIVE (DS-ENG17) | 0.01 | 814776.0 | 407388.0 | 21.0 | 1.0000 | 0.03 | 300698.0 | 150349.0 | 21.0 |
| TAPPET (DS-ENG18) | 0.01 | 814776.0 | 162955.2 | 9.7 | 1.0000 | 0.03 | 300698.0 | 60139.6 | 9.7 |
| EXHAUST SYSTEM (DS-EXH) | 0.12 | 74070.5 | 40738.8 | 5.2 | 0.9997 | 0.32 | 27336.2 | 15034.9 | 5.2 |
| EXHAUST SYSTEM (DS-EXH) | 0.01 | 814776.0 | 407388.0 | 5.0 | 0.9998 | 0.03 | 300698.0 | 150349.0 | 5.0 |
| EXHAUST DUCTING (DS-EXH01) | 0.00 | 0.0 | 814776.0 | 2.0 | 1.0000 | 0.00 | 0.0 | 300698.0 | 2.0 |
| EXPANSION JOINTS (DS-EXH03) | 0.01 | 814776.0 | 203694.0 | 2.9 | 1.0000 | 0.03 | 300698.0 | 75174.5 | 2.9 |
| EXHAUST MANIFOLD (DS-EXH06) | 0.06 | 135796.0 | 116396.6 | 9.2 | 0.9999 | 0.17 | 50116.3 | 42956.9 | 9.2 |
| EXHAUST VALVE (DS-EXH07) | 0.03 | 271592.0 | 135796.0 | 2.8 | 1.0000 | 0.09 | 100232.7 | 50116.3 | 2.8 |
| MUFFLER (DS-EXH10) | 0.00 | 0.0 | 0.0 | 0.0 | 1.0000 | 0.00 | 0.0 | 0.0 | 0.0 |



Copyright © 1998 IEEE. All rights reserved.

TABLE VIII (Continued)

| Equipment | Period Hours | | | | | Operating Hours | | | |
|---|---|---|---|---|---|---|---|---|---|
| | Failures per Year | MTBF (Hours) | MTBCM (Hours) | MTTCM (Hours) | Operational Availability | Failures per Year | MTBF (Hours) | MTBCM (Hours) | MTTCM (Hours) |
| FUEL SYSTEM (DS-FLS) | 1.19 | 7340.3 | 3366.8 | 3.5 | 0.9992 | 3.23 | 2709.0 | 1242.6 | 3.5 |
| FUEL SYSTEM (DS-FLS) | 0.01 | 814776.0 | 814776.0 | 1.0 | 1.0000 | 0.03 | 300698.0 | 300698.0 | 1.0 |
| DAY TANKS (DS-FLS01) | 0.01 | 814776.0 | 203694.0 | 1.5 | 1.0000 | 0.03 | 300698.0 | 75174.5 | 1.5 |
| FUEL FILTER (DS-FLS03) | 0.02 | 407388.0 | 12730.9 | 1.2 | 1.0000 | 0.06 | 150349.0 | 4698.4 | 1.2 |
| GOVERNOR (DS-FLS04) | 0.27 | 32591.0 | 23279.3 | 5.5 | 0.9997 | 0.73 | 12027.9 | 8591.4 | 5.5 |
| PUMPS (DS-FLS06) | 0.24 | 37035.3 | 23279.3 | 3.3 | 0.9999 | 0.64 | 13668.1 | 8591.4 | 3.3 |
| VALVES (DS-FLS07) | 0.06 | 135796.0 | 101847.0 | 2.1 | 1.0000 | 0.17 | 50116.3 | 37587.2 | 2.1 |
| INJECTOR (DS-FLS08) | 0.40 | 22021.0 | 13357.0 | 6.0 | 0.9998 | 1.08 | 8127.0 | 4929.5 | 6.0 |
| FUEL LINE (DS-FLS09) | 0.18 | 47928.0 | 23964.0 | 2.1 | 0.9999 | 0.50 | 17688.1 | 8844.1 | 2.1 |
| GEARBOX (DS-GBX) | *0.01* | *814776.0* | *814776.0* | *12.0* | *1.0000* | 0.03 | 300698.0 | 300698.0 | 12.0 |
| GEARBOX (DS-GBX) | 0.01 | 814776.0 | 814776.0 | 12.0 | 1.0000 | 0.03 | 300698.0 | 300698.0 | 12.0 |
| GENERATOR (DS-GNR) | 0.09 | 101847.0 | 74070.5 | 7.7 | 0.9999 | 0.23 | 37587.2 | 27336.2 | 7.7 |
| GENERATOR (DS-GNR) | 0.04 | 203694.0 | 203694.0 | 18.9 | 0.9999 | 0.12 | 75174.5 | 75174.5 | 18.9 |
| COOLING FANS (DS-GNR04) | 0.00 | 0.0 | 0.0 | 10.0 | 1.0000 | 0.00 | 0.0 | 0.0 | 0.0 |
| FIELD (DS-GNR05) | 0.03 | 271592.0 | 203694.0 | 1.0 | 1.0000 | 0.09 | 100232.7 | 75174.5 | 1.0 |
| FLYWHEEL (DS-GNR10) | 0.01 | 814776.0 | 271592.0 | 1.8 | 1.0000 | 0.03 | 300698.0 | 100232.7 | 1.8 |
| LUBE OIL/HYDRAULIC SYSTEM (DS-LBO) | 0.30 | 29099.1 | 5580.7 | 2.0 | 0.9997 | 0.82 | 10739.2 | 2059.6 | 2.0 |
| LUBE OIL/HYDRAULIC SYSTEM (DS-LBO) | 0.00 | 0.0 | 814776.0 | 4.0 | 1.0000 | 0.00 | 0.0 | 300698.0 | 4.0 |
| HEATER (DS-LBO01) | 0.00 | 0.0 | 0.0 | 0.0 | 1.0000 | 0.00 | 0.0 | 0.0 | 0.0 |
| COOLER (DS-LBO02) | 0.01 | 814776.0 | 814776.0 | 74.2 | 0.9999 | 0.03 | 300698.0 | 300698.0 | 74.2 |
| COOLER FAN (DS-LBO03) | 0.01 | 814776.0 | 814776.0 | 2.0 | 1.0000 | 0.03 | 300698.0 | 300698.0 | 2.0 |
| FILTER (DS-LBO04) | 0.02 | 407388.0 | 8761.0 | 1.2 | 1.0000 | 0.06 | 150349.0 | 3233.3 | 1.2 |
| PUMP (DS-LBO05) | 0.12 | 74070.5 | 42882.9 | 1.7 | 0.9999 | 0.32 | 27336.2 | 15826.2 | 1.7 |
| PIPING (DS-LBO06) | 0.10 | 90530.7 | 40738.8 | 2.4 | 1.0000 | 0.26 | 33410.9 | 15034.9 | 2.4 |
| TANK (DS-LBO08) | 0.00 | 0.0 | 0.0 | 0.0 | 1.0000 | 0.00 | 0.0 | 0.0 | 0.0 |
| VALVES (DS-LBO09) | 0.02 | 407388.0 | 135796.0 | 1.5 | 1.0000 | 0.06 | 150349.0 | 50116.3 | 1.5 |
| STRAINER (DS-LBO10) | 0.02 | 407388.0 | 203694.0 | 1.2 | 1.0000 | 0.06 | 150349.0 | 75174.5 | 1.2 |
| OIL SWITCH (DS-LBO14) | 0.00 | 0.0 | 814776.0 | 1.0 | 1.0000 | 0.00 | 0.0 | 300698.0 | 1.0 |
| STARTING SYSTEM (DS-STS) | 0.19 | 45265.3 | 7686.6 | 1.6 | 0.9999 | 0.52 | 16705.4 | 2836.8 | 1.6 |
| STARTING SYSTEM (DS-STS) | 0.00 | 0.0 | 814776.0 | 2.5 | 1.0000 | 0.00 | 0.0 | 300698.0 | 2.5 |
| STARTING AIR COMPRESSOR (DS-STS02) | 0.03 | 271592.0 | 271592.0 | 4.2 | 1.0000 | 0.09 | 100232.7 | 100232.7 | 4.2 |
| AIR FILTER (DS-STS04) | 0.00 | 0.0 | 10720.7 | 1.3 | 1.0000 | 0.00 | 0.0 | 3956.6 | 1.3 |
| STARTING AIR ELBOW (DS-STS06) | 0.01 | 814776.0 | 814776.0 | 1.0 | 1.0000 | 0.03 | 300698.0 | 300698.0 | 1.0 |
| AIR LINE (DS-STS07) | 0.01 | 814776.0 | 814776.0 | 1.0 | 1.0000 | 0.03 | 300698.0 | 300698.0 | 1.0 |
| VALVES (DS-STS08) | 0.01 | 814776.0 | 407388.0 | 1.2 | 1.0000 | 0.03 | 300698.0 | 150349.0 | 1.2 |
| AIR STARTS (DS-STS10) | 0.12 | 74070.5 | 42882.9 | 2.5 | 1.0000 | 0.32 | 27336.2 | 15826.2 | 2.5 |
| AIR INTAKE (DS-STS11) | 0.00 | 0.0 | 0.0 | 0.0 | 1.0000 | 0.00 | 0.0 | 0.0 | 0.0 |
| AIR DISTRIBUTOR (DS-STS12) | 0.01 | 814776.0 | 814776.0 | 1.5 | 1.0000 | 0.03 | 300698.0 | 300698.0 | 1.5 |
| BATTERY (DS-STS15) | 0.00 | 0.0 | 407388.0 | 1.2 | 1.0000 | 0.00 | 0.0 | 150349.0 | 1.2 |

Copyright © 1998 IEEE. All rights reserved.

TABLE IX
SUBSYSTEM AND COMPONENT RAM MEASURES FOR STANDBY PACKAGE DIESELS

| Equipment | Period Hours | | | | | Operating Hours | | | |
|---|---|---|---|---|---|---|---|---|---|
| | Failures per Year | MTBF (Hours) | MTBCM (Hours) | MTTCM (Hours) | Operational Availability | Failures per Year | MTBF (Hours) | MTBCM (Hours) | MTTCM (Hours) |
| CONTROL & INSTRUMENTATION (DS-CTI) | 0.05 | 178099.0 | 152656.3 | 1.2 | 1.0000 | 0.82 | 10727.3 | 9194.9 | 1.2 |
| CIRCUIT BREAKERS (DS-CTI01) | 0.00 | 0.0 | 0.0 | 0.0 | 1.0000 | 0.00 | 0.0 | 0.0 | 0.0 |
| GAUGES (DS-CTI03) | 0.04 | 213718.8 | 178099.0 | 1.2 | 1.0000 | 0.68 | 12872.8 | 10727.3 | 1.2 |
| THERMOCOUPLES (DS-CTI06) | 0.01 | 1068594.0 | 1068594.0 | 1.0 | 1.0000 | 0.14 | 64364.0 | 64364.0 | 1.0 |
| COOLING WATER SYSTEM (DS-CWT) | 0.07 | 133574.2 | 56241.8 | 1.9 | 1.0000 | 1.09 | 8045.5 | 3387.6 | 1.9 |
| COOLING WATER PUMP (DS-CWT02) | 0.04 | 213718.8 | 89049.5 | 1.8 | 1.0000 | 0.68 | 12872.8 | 5363.7 | 1.8 |
| ENGINE COOLING (DS-CWT03) | 0.00 | 0.0 | 0.0 | 0.0 | 1.0000 | 0.00 | 0.0 | 0.0 | 0.0 |
| VALVES (DS-CWT07) | 0.00 | 0.0 | 1068594.0 | 1.0 | 1.0000 | 0.00 | 0.0 | 64364.0 | 1.0 |
| COOLING TOWERS (DS-CWT08) | 0.01 | 1068594.0 | 1068594.0 | 2.0 | 1.0000 | 0.14 | 64364.0 | 64364.0 | 2.0 |
| WATER LINE (DS-CWT09) | 0.01 | 1068594.0 | 534297.0 | 1.0 | 1.0000 | 0.14 | 64364.0 | 32182.0 | 1.0 |
| HEAT EXCHANGER (DS-CWT10) | 0.01 | 1068594.0 | 534297.0 | 5.0 | 1.0000 | 0.14 | 64364.0 | 32182.0 | 5.0 |
| WATER HEADER (DS-CWT12) | 0.00 | 0.0 | 1068594.0 | 1.0 | 1.0000 | 0.00 | 0.0 | 64364.0 | 1.0 |
| DIESEL ENGINE (DS-ENG) | 0.26 | 33393.6 | 18424.0 | 4.1 | 0.9995 | 4.36 | 2011.4 | 1109.7 | 4.1 |
| DIESEL ENGINE (DS-ENG) | 0.00 | 0.0 | 0.0 | 0.0 | 0.9997 | 0.00 | 0.0 | 0.0 | 0.0 |
| BEARINGS (DS-ENG01) | 0.01 | 1068594.0 | 213718.8 | 2.0 | 1.0000 | 0.14 | 64364.0 | 12872.8 | 2.0 |
| CYLINDER (DS-ENG02) | 0.05 | 178099.0 | 152656.3 | 2.3 | 1.0000 | 0.82 | 10727.3 | 9194.9 | 2.3 |
| CYLINDER HEADS (DS-ENG03) | 0.08 | 106859.4 | 62858.5 | 5.6 | 0.9999 | 1.36 | 6436.4 | 3786.1 | 5.6 |
| PISTONS (DS-ENG06) | 0.02 | 356198.0 | 178099.0 | 4.0 | 1.0000 | 0.41 | 21454.7 | 10727.3 | 4.0 |
| TURBO CHARGER (DS-ENG07) | 0.01 | 1068594.0 | 534297.0 | 6.0 | 1.0000 | 0.14 | 64364.0 | 32182.0 | 6.0 |
| VALVES (DS-ENG08) | 0.01 | 1068594.0 | 534297.0 | 3.0 | 1.0000 | 0.14 | 64364.0 | 32182.0 | 3.0 |
| RINGS (DS-ENG09) | 0.07 | 133574.2 | 97144.9 | 5.4 | 1.0000 | 1.09 | 8045.5 | 5851.3 | 5.4 |
| TIMING (DS-ENG10) | 0.00 | 0.0 | 1068594.0 | 1.0 | 1.0000 | 0.00 | 0.0 | 64364.0 | 1.0 |
| INTAKE MANIFOLD (DS-ENG11) | 0.00 | 0.0 | 534297.0 | 1.0 | 1.0000 | 0.00 | 0.0 | 32182.0 | 1.0 |
| CRANKCASE (DS-ENG12) | 0.01 | 1068594.0 | 356198.0 | 1.3 | 1.0000 | 0.14 | 64364.0 | 21454.7 | 1.3 |
| RODS (DS-ENG14) | 0.00 | 0.0 | 1068594.0 | 2.0 | 1.0000 | 0.00 | 0.0 | 64364.0 | 2.0 |
| CAM (DS-ENG15) | 0.00 | 0.0 | 0.0 | 0.0 | 1.0000 | 0.00 | 0.0 | 0.0 | 0.0 |
| CHAIN DRIVE (DS-ENG17) | 0.00 | 0.0 | 0.0 | 0.0 | 1.0000 | 0.00 | 0.0 | 0.0 | 0.0 |
| TAPPET (DS-ENG18) | 0.00 | 0.0 | 0.0 | 0.0 | 1.0000 | 0.00 | 0.0 | 0.0 | 0.0 |
| ENGINE SWITCH GEAR (DS-ENG19) | 0.01 | 1068594.0 | 1068594.0 | 5.0 | 1.0000 | 0.14 | 64364.0 | 64364.0 | 5.0 |
| EXHAUST SYSTEM (DS-EXH) | 0.02 | 356198.0 | 213718.8 | 1.8 | 1.0000 | 0.41 | 21454.7 | 12872.8 | 1.8 |
| EXHAUST SYSTEM (DS-EXH) | 0.02 | 534297.0 | 356198.0 | 1.7 | 1.0000 | 0.27 | 32182.0 | 21454.7 | 1.7 |
| EXPANSION JOINTS (DS-EXH03) | 0.01 | 1068594.0 | 1068594.0 | 3.0 | 1.0000 | 0.14 | 64364.0 | 64364.0 | 3.0 |
| PORTS (DS-EXH05) | 0.00 | 0.0 | 0.0 | 0.0 | 1.0000 | 0.00 | 0.0 | 0.0 | 0.0 |
| EXHAUST MANIFOLD (DS-EXH06) | 0.00 | 0.0 | 1068594.0 | 1.0 | 1.0000 | 0.00 | 0.0 | 64364.0 | 1.0 |
| FUEL SYSTEM (DS-FLS) | 0.24 | 36848.1 | 14841.6 | 2.3 | 0.9998 | 3.95 | 2219.4 | 893.9 | 2.3 |
| FUEL SYSTEM (DS-FLS) | 0.01 | 1068594.0 | 534297.0 | 1.0 | 1.0000 | 0.14 | 64364.0 | 32182.0 | 1.0 |
| DAY TANKS (DS-FLS01) | 0.01 | 1068594.0 | 1068594.0 | 1.0 | 1.0000 | 0.14 | 64364.0 | 64364.0 | 1.0 |
| FUEL FILTER (DS-FLS03) | 0.00 | 0.0 | 56241.8 | 1.0 | 1.0000 | 0.00 | 0.0 | 3387.6 | 1.0 |
| GOVERNOR (DS-FLS04) | 0.00 | 0.0 | 0.0 | 0.0 | 1.0000 | 0.00 | 0.0 | 0.0 | 0.0 |
| PUMPS (DS-FLS06) | 0.04 | 213718.8 | 178099.0 | 1.8 | 0.9999 | 0.68 | 12872.8 | 10727.3 | 1.8 |
| VALVES (DS-FLS07) | 0.03 | 267148.5 | 106859.4 | 2.1 | 1.0000 | 0.54 | 16091.0 | 6436.4 | 2.1 |
| INJECTOR (DS-FLS08) | 0.13 | 66787.1 | 38164.1 | 3.6 | 0.9999 | 2.18 | 4022.8 | 2298.7 | 3.6 |
| FUEL LINE (DS-FLS09) | 0.00 | 0.0 | 1068594.0 | 2.0 | 1.0000 | 0.00 | 0.0 | 64364.0 | 2.0 |
| FUEL OIL REGULATOR (DS-FLS10) | 0.00 | 0.0 | 0.0 | 0.0 | 1.0000 | 0.00 | 0.0 | 0.0 | 0.0 |
| GAS JUMPER (DS-FLS11) | 0.02 | 534297.0 | 213718.8 | 2.0 | 1.0000 | 0.27 | 32182.0 | 12872.8 | 2.0 |
| GENERATOR (DS-GNR) | 0.03 | 267148.5 | 213718.8 | 2.8 | 0.9987 | 0.54 | 16091.0 | 12872.8 | 2.8 |
| GENERATOR (DS-GNR) | 0.01 | 1068594.0 | 1068594.0 | 2.0 | 0.9987 | 0.14 | 64364.0 | 64364.0 | 2.0 |
| FIELD (DS-GNR05) | 0.02 | 356198.0 | 267148.5 | 3.0 | 1.0000 | 0.41 | 21454.7 | 16091.0 | 3.0 |
| FLYWHEEL (DS-GNR10) | 0.00 | 0.0 | 0.0 | 0.0 | 1.0000 | 0.00 | 0.0 | 0.0 | 0.0 |
| LUBE OIL/HYDRAULIC SYSTEM (DS-LBO) | 0.16 | 56241.8 | 20162.2 | 3.4 | 0.9998 | 2.59 | 3387.6 | 1214.4 | 3.4 |
| LUBE OIL/HYDRAULIC SYSTEM (DS-LBO) | 0.00 | 0.0 | 0.0 | 0.0 | 1.0000 | 0.00 | 0.0 | 0.0 | 0.0 |
| HEATER (DS-LBO01) | 0.05 | 178099.0 | 76328.1 | 1.9 | 1.0000 | 0.82 | 10727.3 | 4597.4 | 1.9 |
| COOLER (DS-LBO02) | 0.00 | 0.0 | 1068594.0 | 1.0 | 1.0000 | 0.00 | 0.0 | 64364.0 | 1.0 |
| COOLER FAN (DS-LBO03) | 0.01 | 1068594.0 | 1068594.0 | 15.0 | 1.0000 | 0.14 | 64364.0 | 64364.0 | 15.0 |
| FILTER (DS-LBO04) | 0.02 | 356198.0 | 56241.8 | 5.4 | 0.9999 | 0.41 | 21454.7 | 3387.6 | 5.4 |
| PUMP (DS-LBO05) | 0.02 | 356198.0 | 133574.2 | 1.9 | 1.0000 | 0.41 | 21454.7 | 8045.5 | 1.9 |
| PIPING (DS-LBO06) | 0.01 | 1068594.0 | 1068594.0 | 8.0 | 1.0000 | 0.14 | 64364.0 | 64364.0 | 8.0 |
| TANK (DS-LBO08) | 0.01 | 1068594.0 | 1068594.0 | 2.0 | 1.0000 | 0.14 | 64364.0 | 64364.0 | 2.0 |
| VALVES (DS-LBO09) | 0.01 | 1068594.0 | 1068594.0 | 2.0 | 1.0000 | 0.14 | 64364.0 | 64364.0 | 2.0 |
| STRAINER (DS-LBO10) | 0.02 | 534297.0 | 356198.0 | 1.7 | 1.0000 | 0.27 | 32182.0 | 21454.7 | 1.7 |
| LUBRICATOR (DS-LBO12) | 0.01 | 1068594.0 | 267148.5 | 1.2 | 1.0000 | 0.14 | 64364.0 | 16091.0 | 1.2 |
| STARTING SYSTEM (DS-STS) | 0.14 | 62858.5 | 44524.8 | 2.6 | 0.9999 | 2.31 | 3786.1 | 2681.8 | 2.6 |
| STARTING SYSTEM (DS-STS) | 0.02 | 534297.0 | 534297.0 | 2.5 | 1.0000 | 0.27 | 32182.0 | 32182.0 | 2.5 |
| STARTING AIR COMPRESSOR (DS-STS02) | 0.02 | 356198.0 | 356198.0 | 6.7 | 1.0000 | 0.41 | 21454.7 | 21454.7 | 6.7 |
| AIR FILTER (DS-STS04) | 0.00 | 0.0 | 1068594.0 | 1.0 | 1.0000 | 0.00 | 0.0 | 64364.0 | 1.0 |
| VALVES (DS-STS08) | 0.01 | 1068594.0 | 534297.0 | 3.0 | 1.0000 | 0.14 | 64364.0 | 32182.0 | 3.0 |
| AIR STARTS (DS-STS10) | 0.07 | 133574.2 | 89049.5 | 2.0 | 1.0000 | 1.09 | 8045.5 | 5363.7 | 2.0 |
| AIR INTAKE (DS-STS11) | 0.00 | 0.0 | 1068594.0 | 1.0 | 1.0000 | 0.00 | 0.0 | 64364.0 | 1.0 |
| BATTERY (DS-STS15) | 0.02 | 356198.0 | 356198.0 | 2.0 | 1.0000 | 0.41 | 21454.7 | 21454.7 | 2.0 |


Copyright © 1998 IEEE. All rights reserved.

TABLE X
SUBSYSTEM AND COMPONENT RAM MEASURES FOR CONTINUOUS-DUTY GAS TURBINES

| Equipment | Period Hours | | | | | Operating Hours | | | |
|---|---|---|---|---|---|---|---|---|---|
| | Failures per Year | MTBF (Hours) | MTBCM (Hours) | MTTCM (Hours) | Operational Availability | Failures per Year | MTBF (Hours) | MTBCM (Hours) | MTTCM (Hours) |
| AIR INTAKE SYSTEM (GT-AIS) | 0.00 | 0.0 | 47698.3 | 8.6 | 1.0000 | 0.00 | 0.0 | 29148.1 | 8.6 |
| AIR INLET FILTER (GT-AIS01) | 0.00 | 0.0 | 55648.0 | 2.0 | 1.0000 | 0.00 | 0.0 | 34006.2 | 2.0 |
| DUCTING (GT-AIS03) | 0.00 | 0.0 | 333888.0 | 48.0 | 1.0000 | 0.00 | 0.0 | 204037.0 | 48.0 |
| BALANCE OF PLANT (GT-BOP) | 0.05 | 166944.0 | 83472.0 | 2.3 | 0.9907 | 0.09 | 102018.5 | 51009.2 | 2.3 |
| FIRE SUPPRESSION/DETECTION (GT-BOP03) | 0.05 | 166944.0 | 83472.0 | 2.3 | 1.0000 | 0.09 | 102018.5 | 51009.2 | 2.3 |
| TESTING (GT-BOP04) | 0.00 | 0.0 | 0.0 | 0.0 | 1.0000 | 0.00 | 0.0 | 0.0 | 0.0 |
| CLEANING (GT-BOP05) | 0.00 | 0.0 | 0.0 | 0.0 | 0.9990 | 0.00 | 0.0 | 0.0 | 0.0 |
| INSPECTION (GT-BOP06) | 0.00 | 0.0 | 0.0 | 0.0 | 0.9918 | 0.00 | 0.0 | 0.0 | 0.0 |
| COMBUSTION SYSTEM (GT-CMB) | 0.21 | 41736.0 | 23849.1 | 1.5 | 0.9999 | 0.34 | 25504.6 | 14574.1 | 1.5 |
| COMBUSTION SYSTEM (GT-CMB) | 0.08 | 111296.0 | 111296.0 | 1.3 | 1.0000 | 0.13 | 68012.3 | 68012.3 | 1.3 |
| FUEL NOZZLES (GT-CMB02) | 0.13 | 66777.6 | 30353.5 | 1.6 | 1.0000 | 0.21 | 40807.4 | 18548.8 | 1.6 |
| COMPRESSOR (GT-CMP) | 0.10 | 83472.0 | 47698.3 | 1.1 | 1.0000 | 0.17 | 51009.2 | 29148.1 | 1.1 |
| FLEXLINE (GT-CMP05) | 0.00 | 0.0 | 333888.0 | 1.0 | 1.0000 | 0.00 | 0.0 | 204037.0 | 1.0 |
| BLEEDVALVE (GT-CMP06) | 0.10 | 83472.0 | 55648.0 | 1.2 | 1.0000 | 0.17 | 51009.2 | 34006.2 | 1.2 |
| CONTROL & INSTRUMENTATION (GT-CTI) | 0.63 | 13912.0 | 9274.7 | 1.2 | 0.9999 | 1.03 | 8501.5 | 5667.7 | 1.2 |
| CONTROL & INSTRUMENTATION (GT-CTI) | 0.03 | 333888.0 | 333888.0 | 1.0 | 1.0000 | 0.04 | 204037.0 | 204037.0 | 1.0 |
| CIRCUIT BREAKERS (GT-CTI01) | 0.05 | 166944.0 | 166944.0 | 1.0 | 1.0000 | 0.09 | 102018.5 | 102018.5 | 1.0 |
| ELECTRICAL MODULE (GT-CTI02) | 0.31 | 27824.0 | 23849.1 | 1.5 | 0.9999 | 0.52 | 17003.1 | 14574.1 | 1.5 |
| GAUGES (GT-CTI03) | 0.05 | 166944.0 | 37098.7 | 0.8 | 1.0000 | 0.09 | 102018.5 | 22670.8 | 0.8 |
| SWITCHES (GT-CTI04) | 0.16 | 55648.0 | 41736.0 | 1.1 | 1.0000 | 0.26 | 34006.2 | 25504.6 | 1.1 |
| THERMOCOUPLE (GT-CTI07) | 0.03 | 333888.0 | 166944.0 | 2.0 | 1.0000 | 0.04 | 204037.0 | 102018.5 | 2.0 |
| EXHAUST SYSTEM (GT-EXH) | 0.00 | 0.0 | 333888.0 | 1.0 | 1.0000 | 0.00 | 0.0 | 204037.0 | 1.0 |
| EXHAUST FAN (GT-EXH03) | 0.00 | 0.0 | 333888.0 | 1.0 | 1.0000 | 0.00 | 0.0 | 204037.0 | 1.0 |
| FUEL SYSTEM (GT-FLS) | 1.89 | 4637.3 | 3442.1 | 3.0 | 0.9992 | 3.09 | 2833.8 | 2103.5 | 3.0 |
| FUEL SYSTEM (GT-FLS) | 0.08 | 111296.0 | 111296.0 | 1.5 | 1.0000 | 0.13 | 68012.3 | 68012.3 | 1.5 |
| AIR MANIFOLD (GT-FLS01) | 0.00 | 0.0 | 333888.0 | 2.0 | 1.0000 | 0.00 | 0.0 | 204037.0 | 2.0 |
| BOOST PUMP (GT-FLS02) | 0.13 | 66777.6 | 66777.6 | 2.2 | 1.0000 | 0.21 | 40807.4 | 40807.4 | 2.2 |
| FILTERS (GT-FLS04) | 0.10 | 83472.0 | 55648.0 | 1.8 | 1.0000 | 0.17 | 51009.2 | 34006.2 | 1.8 |
| GAS MANIFOLD (GT-FLS06) | 0.00 | 0.0 | 0.0 | 0.0 | 1.0000 | 0.00 | 0.0 | 0.0 | 0.0 |
| GOVERNOR (GT-FLS07) | 0.60 | 14516.9 | 10770.6 | 5.9 | 0.9995 | 0.99 | 8871.2 | 6581.8 | 5.9 |
| MAIN FUEL PUMP (GT-FLS08) | 0.10 | 83472.0 | 66777.6 | 1.6 | 1.0000 | 0.17 | 51009.2 | 40807.4 | 1.6 |
| ORIFICE (GT-FLS10) | 0.03 | 333888.0 | 166944.0 | 2.0 | 1.0000 | 0.04 | 204037.0 | 102018.5 | 2.0 |
| PRESSURE GAUGE (GT-FLS12) | 0.03 | 333888.0 | 333888.0 | 1.0 | 1.0000 | 0.04 | 204037.0 | 204037.0 | 1.0 |
| STRAINER (GT-FLS13) | 0.05 | 166944.0 | 83472.0 | 1.2 | 1.0000 | 0.09 | 102018.5 | 51009.2 | 1.2 |
| VALVES (GT-FLS14) | 0.39 | 22259.2 | 16694.4 | 1.5 | 0.9999 | 0.64 | 13602.5 | 10201.9 | 1.5 |
| PIPING (GT-FLS15) | 0.18 | 47698.3 | 33388.8 | 2.6 | 0.9999 | 0.30 | 29148.1 | 20403.7 | 2.6 |
| SEALS (GT-FLS16) | 0.16 | 55648.0 | 47698.3 | 1.1 | 1.0000 | 0.26 | 34006.2 | 29148.1 | 1.1 |
| FLOW METER (GT-FLS17) | 0.03 | 333888.0 | 166944.0 | 1.0 | 1.0000 | 0.04 | 204037.0 | 102018.5 | 1.0 |
| GEARBOX (GT-GBX) | 0.03 | 333888.0 | 166944.0 | 1.5 | 1.0000 | 0.04 | 204037.0 | 102018.5 | 1.5 |
| GEARBOX (GT-GBX) | 0.00 | 0.0 | 333888.0 | 2.0 | 1.0000 | 0.00 | 0.0 | 204037.0 | 2.0 |
| SEALS (GT-GBX04) | 0.03 | 333888.0 | 333888.0 | 1.0 | 1.0000 | 0.04 | 204037.0 | 204037.0 | 1.0 |
| GENERATOR (GT-GNR) | 0.13 | 66777.6 | 41736.0 | 4.1 | 0.9999 | 0.21 | 40807.4 | 25504.6 | 4.1 |
| GENERATOR (GT-GNR) | 0.00 | 0.0 | 333888.0 | 8.0 | 1.0000 | 0.00 | 0.0 | 204037.0 | 8.0 |
| BEARINGS (GT-GNR01) | 0.00 | 0.0 | 0.0 | 0.0 | 1.0000 | 0.00 | 0.0 | 0.0 | 0.0 |
| FIELD (GT-GNR05) | 0.00 | 0.0 | 0.0 | 0.0 | 1.0000 | 0.00 | 0.0 | 0.0 | 0.0 |
| STATOR (GT-GNR09) | 0.00 | 0.0 | 0.0 | 0.0 | 1.0000 | 0.00 | 0.0 | 0.0 | 0.0 |
| TURBINE COUPLING (GT-GNR10) | 0.05 | 166944.0 | 83472.0 | 2.8 | 1.0000 | 0.09 | 102018.5 | 51009.2 | 2.8 |
| VOLTAGE REGULATOR (GT-GNR11) | 0.08 | 111296.0 | 111296.0 | 4.7 | 1.0000 | 0.13 | 68012.3 | 68012.3 | 4.7 |
| LUBE OIL/HYDRAULIC SYSTEM (GT-LBO) | 0.71 | 12366.2 | 8347.2 | 1.8 | 0.9998 | 1.16 | 7556.9 | 5100.9 | 1.8 |
| AIR-TO-OIL COOLER (GT-LBO01) | 0.13 | 66777.6 | 66777.6 | 2.3 | 0.9999 | 0.21 | 40807.4 | 40807.4 | 2.3 |
| HYDRAULIC PUMP (GT-LBO02) | 0.05 | 166944.0 | 166944.0 | 2.0 | 1.0000 | 0.09 | 102018.5 | 102018.5 | 2.0 |
| LUBE OIL FILTER (GT-LBO03) | 0.08 | 111296.0 | 30353.5 | 1.9 | 1.0000 | 0.13 | 68012.3 | 18548.8 | 1.9 |
| OIL COOLER FAN (GT-LBO05) | 0.08 | 111296.0 | 83472.0 | 2.0 | 1.0000 | 0.13 | 68012.3 | 51009.2 | 2.0 |
| OIL MANIFOLDS (GT-LBO06) | 0.03 | 333888.0 | 333888.0 | 1.0 | 1.0000 | 0.04 | 204037.0 | 204037.0 | 1.0 |
| OIL TANK (GT-LBO07) | 0.05 | 166944.0 | 166944.0 | 1.0 | 1.0000 | 0.09 | 102018.5 | 102018.5 | 1.0 |
| PRE LUBE OIL PUMP (GT-LBO09) | 0.10 | 83472.0 | 83472.0 | 2.6 | 1.0000 | 0.17 | 51009.2 | 51009.2 | 2.6 |
| PIPING (GT-LBO12) | 0.10 | 83472.0 | 55648.0 | 1.1 | 1.0000 | 0.17 | 51009.2 | 34006.2 | 1.1 |
| SEALS (GT-LBO13) | 0.03 | 333888.0 | 111296.0 | 1.0 | 1.0000 | 0.04 | 204037.0 | 68012.3 | 1.0 |
| PRECIPITATOR (GT-LBO14) | 0.05 | 166944.0 | 166944.0 | 2.5 | 1.0000 | 0.09 | 102018.5 | 102018.5 | 2.5 |
| REDUCTION GEARBOX (GT-RGB) | 0.03 | 333888.0 | 333888.0 | 2.0 | 1.0000 | 0.04 | 204037.0 | 204037.0 | 2.0 |
| REDUCTION GEARBOX (GT-RGB) | 0.03 | 333888.0 | 333888.0 | 2.0 | 1.0000 | 0.04 | 204037.0 | 204037.0 | 2.0 |

Copyright © 1998 IEEE. All rights reserved.

TABLE X (Continued)

| Equipment | Period Hours | | | | | Operating Hours | | | |
|---|---|---|---|---|---|---|---|---|---|
| | Failures per Year | MTBF (Hours) | MTBCM (Hours) | MTTCM (Hours) | Operational Availability | Failures per Year | MTBF (Hours) | MTBCM (Hours) | MTTCM (Hours) |
| STARTING SYSTEM (GT-STS) | 0.71 | 12366.2 | 9820.2 | 19.5 | 0.9980 | 1.16 | 7556.9 | 6001.1 | 19.5 |
| STARTING SYSTEM (GT-STS) | 0.08 | 111296.0 | 111296.0 | 0.7 | 1.0000 | 0.13 | 68012.3 | 68012.3 | 0.7 |
| AIR PUMP (GT-STS01) | 0.03 | 333888.0 | 111296.0 | 2.3 | 1.0000 | 0.04 | 204037.0 | 68012.3 | 2.3 |
| FILTER (GT-STS02) | 0.03 | 333888.0 | 333888.0 | 1.0 | 1.0000 | 0.04 | 204037.0 | 204037.0 | 1.0 |
| REGULATOR (GT-STS03) | 0.00 | 0.0 | 0.0 | 0.0 | 1.0000 | 0.00 | 0.0 | 0.0 | 0.0 |
| BATTERY (GT-STS06) | 0.00 | 0.0 | 0.0 | 0.0 | 1.0000 | 0.00 | 0.0 | 0.0 | 0.0 |
| STARTING SHAFT (GT-STS07) | 0.03 | 333888.0 | 333888.0 | 2.0 | 1.0000 | 0.04 | 204037.0 | 204037.0 | 2.0 |
| STARTER MOTOR (GT-STS08) | 0.13 | 66777.6 | 47698.3 | 83.6 | 0.9982 | 0.21 | 40807.4 | 29148.1 | 83.6 |
| GARLOC SEAL (GT-STS11) | 0.42 | 20868.0 | 17573.1 | 3.5 | 0.9998 | 0.69 | 12752.3 | 10738.8 | 3.5 |
| TURBINE (GT-TRB) | 0.08 | 111296.0 | 166944.0 | 121.0 | 0.9954 | 0.13 | 68012.3 | 102018.5 | 121.0 |
| TURBINE (GT-TRB) | 0.05 | 166944.0 | 333888.0 | 240.0 | 0.9954 | 0.09 | 102018.5 | 204037.0 | 240.0 |
| CASING (GT-TRB02) | 0.00 | 0.0 | 0.0 | 0.0 | 1.0000 | 0.00 | 0.0 | 0.0 | 0.0 |
| BEARING (GT-TRB05) | 0.03 | 333888.0 | 333888.0 | 2.0 | 1.0000 | 0.04 | 204037.0 | 204037.0 | 2.0 |

TABLE XI
SUBSYSTEM AND COMPONENT RAM MEASURES FOR STANDBY GAS TURBINES

| Equipment | Period Hours | | | | | Operating Hours | | | |
|---|---|---|---|---|---|---|---|---|---|
| | Failures per Year | MTBF (Hours) | MTBCM (Hours) | MTTCM (Hours) | Operational Availability | Failures per Year | MTBF (Hours) | MTBCM (Hours) | MTTCM (Hours) |
| AIR INTAKE SYSTEM (GT-AIS) | 0.01 | 975612.0 | 975612.0 | 1.0 | 1.0000 | 1.29 | 6795.5 | 6795.5 | 1.0 |
| DUMPERS (GT-AIS04) | 0.01 | 975612.0 | 975612.0 | 1.0 | 1.0000 | 1.29 | 6795.5 | 6795.5 | 1.0 |
| BALANCE OF PLANT (GT-BOP) | 0.00 | 0.0 | 0.0 | 0.0 | 0.9989 | 0.00 | 0.0 | 0.0 | 0.0 |
| TESTING (GT-BOP04) | 0.00 | 0.0 | 0.0 | 0.0 | 1.0000 | 0.00 | 0.0 | 0.0 | 0.0 |
| CLEANING (GT-BOP05) | 0.00 | 0.0 | 0.0 | 0.0 | 1.0000 | 0.00 | 0.0 | 0.0 | 0.0 |
| INSPECTION (GT-BOP06) | 0.00 | 0.0 | 0.0 | 0.0 | 0.9989 | 0.00 | 0.0 | 0.0 | 0.0 |
| COMBUSTION SYSTEM (GT-CMB) | 0.00 | 1951224.0 | 1951224.0 | 4.0 | 1.0000 | 0.64 | 13591.0 | 13591.0 | 4.0 |
| FUEL NOZZLES (GT-CMB02) | 0.00 | 1951224.0 | 1951224.0 | 4.0 | 1.0000 | 0.64 | 13591.0 | 13591.0 | 4.0 |
| CONTROL & INSTRUMENTATION (GT-CTI) | 0.04 | 216802.7 | 150094.2 | 8.3 | 0.9999 | 5.80 | 1510.1 | 1045.5 | 8.3 |
| CONTROL & INSTRUMENTATION (GT-CTI) | 0.00 | 1951224.0 | 1951224.0 | 1.0 | 1.0000 | 0.64 | 13591.0 | 13591.0 | 1.0 |
| CIRCUIT BREAKERS (GT-CTI01) | 0.00 | 0.0 | 1951224.0 | 0.5 | 1.0000 | 0.00 | 0.0 | 13591.0 | 0.5 |
| ELECTRICAL MODULE (GT-CTI02) | 0.02 | 487806.0 | 325204.0 | 7.2 | 1.0000 | 2.58 | 3397.8 | 2265.2 | 7.2 |
| GAUGES (GT-CTI03) | 0.00 | 1951224.0 | 975612.0 | 1.0 | 1.0000 | 0.64 | 13591.0 | 6795.5 | 1.0 |
| SWITCHES (GT-CTI04) | 0.01 | 975612.0 | 975612.0 | 29.0 | 1.0000 | 1.29 | 6795.5 | 6795.5 | 29.0 |
| WIRING (GT-CTI05) | 0.00 | 1951224.0 | 1951224.0 | 4.0 | 1.0000 | 0.64 | 13591.0 | 13591.0 | 4.0 |
| EXHAUST SYSTEM (GT-EXH) | 0.00 | 1951224.0 | 975612.0 | 5.5 | 1.0000 | 0.64 | 13591.0 | 6795.5 | 5.5 |
| EXHAUST DUCTING (GT-EXH01) | 0.00 | 0.0 | 1951224.0 | 1.0 | 1.0000 | 0.00 | 0.0 | 13591.0 | 1.0 |
| EXHAUST FAN (GT-EXH03) | 0.00 | 1951224.0 | 1951224.0 | 10.0 | 1.0000 | 0.64 | 13591.0 | 13591.0 | 10.0 |
| FUEL SYSTEM (GT-FLS) | 0.04 | 243903.0 | 130081.6 | 5.0 | 1.0000 | 5.16 | 1698.9 | 906.1 | 5.0 |
| BOOST PUMP (GT-FLS02) | 0.01 | 650408.0 | 650408.0 | 2.0 | 1.0000 | 1.93 | 4530.3 | 4530.3 | 2.0 |
| FILTERS (GT-FLS04) | 0.00 | 1951224.0 | 278746.3 | 1.1 | 1.0000 | 0.64 | 13591.0 | 1941.6 | 1.1 |
| GOVERNOR (GT-FLS07) | 0.00 | 1951224.0 | 1951224.0 | 2.0 | 1.0000 | 0.64 | 13591.0 | 13591.0 | 2.0 |
| MAIN FUEL PUMP (GT-FLS08) | 0.00 | 1951224.0 | 1951224.0 | 4.0 | 1.0000 | 0.64 | 13591.0 | 13591.0 | 4.0 |
| STRAINER (GT-FLS13) | 0.00 | 0.0 | 0.0 | 0.0 | 1.0000 | 0.00 | 0.0 | 0.0 | 0.0 |
| VALVES (GT-FLS14) | 0.01 | 975612.0 | 975612.0 | 27.5 | 1.0000 | 1.29 | 6795.5 | 6795.5 | 27.5 |
| PIPING (GT-FLS15) | 0.00 | 0.0 | 1951224.0 | 1.0 | 1.0000 | 0.00 | 0.0 | 13591.0 | 1.0 |
| GENERATOR (GT-GNR) | 0.04 | 216802.7 | 216802.7 | 33.3 | 0.9998 | 5.80 | 1510.1 | 1510.1 | 33.3 |
| GENERATOR (GT-GNR) | 0.00 | 1951224.0 | 1951224.0 | 72.0 | 1.0000 | 0.64 | 13591.0 | 13591.0 | 72.0 |
| TURBINE COUPLING (GT-GNR10) | 0.03 | 278746.3 | 278746.3 | 32.2 | 0.9999 | 4.51 | 1941.6 | 1941.6 | 32.2 |
| VOLTAGE REGULATOR (GT-GNR11) | 0.00 | 1951224.0 | 1951224.0 | 2.0 | 1.0000 | 0.64 | 13591.0 | 13591.0 | 2.0 |
| LUBE OIL/HYDRAULIC SYSTEM (GT-LBO) | 0.02 | 390244.8 | 177384.0 | 1.6 | 1.0000 | 3.22 | 2718.2 | 1235.5 | 1.6 |
| LUBE OIL FILTER (GT-LBO03) | 0.00 | 0.0 | 650408.0 | 2.0 | 1.0000 | 0.00 | 0.0 | 4530.3 | 2.0 |
| VALVES (GT-LBO11) | 0.00 | 0.0 | 1951224.0 | 1.0 | 1.0000 | 0.00 | 0.0 | 13591.0 | 1.0 |
| PIPING (GT-LBO12) | 0.02 | 487806.0 | 487806.0 | 1.8 | 1.0000 | 2.58 | 3397.8 | 3397.8 | 1.8 |
| SEALS (GT-LBO13) | 0.00 | 1951224.0 | 650408.0 | 1.3 | 1.0000 | 0.64 | 13591.0 | 4530.3 | 1.3 |
| REDUCTION GEARBOX (GT-RGB) | 0.00 | 1951224.0 | 1951224.0 | 360.0 | 0.9998 | 0.64 | 13591.0 | 13591.0 | 360.0 |
| REDUCTION GEARBOX (GT-RGB) | 0.00 | 1951224.0 | 1951224.0 | 360.0 | 0.9998 | 0.64 | 13591.0 | 13591.0 | 360.0 |
| STARTING SYSTEM (GT-STS) | 0.13 | 67283.6 | 45377.3 | 28.6 | 0.9994 | 18.69 | 468.7 | 316.1 | 28.6 |
| STARTING SYSTEM (GT-STS) | 0.00 | 1951224.0 | 1951224.0 | 2.0 | 1.0000 | 0.64 | 13591.0 | 13591.0 | 2.0 |
| BATTERY (GT-STS06) | 0.08 | 108401.3 | 60975.8 | 3.3 | 1.0000 | 11.60 | 755.1 | 424.7 | 3.3 |
| STARTING SHAFT (GT-STS07) | 0.02 | 390244.8 | 390244.8 | 93.5 | 0.9998 | 3.22 | 2718.2 | 2718.2 | 93.5 |
| STARTER MOTOR (GT-STS08) | 0.02 | 390244.8 | 390244.8 | 130.8 | 0.9997 | 3.22 | 2718.2 | 2718.2 | 130.8 |
| TURBINE (GT-TRB) | 0.02 | 390244.8 | 390244.8 | 1158.4 | 0.9970 | 3.22 | 2718.2 | 2718.2 | 1158.4 |
| TURBINE (GT-TRB) | 0.02 | 487806.0 | 487806.0 | 1398.0 | 0.9971 | 2.58 | 3397.8 | 3397.8 | 1398.0 |
| BEARING (GT-TRB05) | 0.00 | 1951224.0 | 1951224.0 | 200.0 | 0.9999 | 0.64 | 13591.0 | 13591.0 | 200.0 |


Copyright © 1998 IEEE. All rights reserved.

## Discussion

**R. H. Gauger** (Holmes & Narver): This is an excellent survey and is the most comprehensive one available for the 600–1800-kW size range of diesel and gas-turbine-generating units. The results are not what I would have expected, and users of these data should be altered to differing results from surveys made by others. I have made a number of surveys of the reliability of diesel and gas-turbine-generating units of various sizes and will be making a comparison of the results with this new survey.

**L. D. Monaghan** (Hartford Steam Boiler Inspection and Insurance Company): My comments are directed at the corrective maintenance category. The corrective maintenance code should indicate why the corrective maintenance was necessary. The cause should address such things as lack of preventive maintenance or a manufacturer's defect. Knowing the reason for the maintenance would help the user of these data to differentiate between a manufacturing problem and an operational problem. Another suggestion is for the maintenance category to be subdivided into routine, preventive, and lack of maintenance.

**Richard H. McFadden, Peter L. Appiganni, and Gary DeMoss** (Science Applications International Corporation): This paper represents a significant new base of reliability data for the most popular types of small generating units and will be a valuable resource for intelligent decisions between diesel- and gas-turbine-powered generation. The authors' component coding approach is excellent and would be a good basis for a standardized "component taxonomy" for diesel and gas-turbine generators.

The paper raises some questions for which answers would be valuable to system and reliability engineers contemplating similar projects, and we would appreciate the authors' comments on them.

First, as the authors remark, failure to start is the predominant failure mode of units of both types in "standby" service. (Independently developed reliability statistics on both nuclear-plant standby diesels and utility peaking gas turbines tend to confirm this observation.) As the authors also imply, the distinction between standby and continuous service is blurred in the industrial-commercial environment, because even the sets in nominally "continuous" duty typically operate cyclically, with many more starts than a base-loaded generating unit. Since starting reliability seems to be a critical RAM parameter, why are failure rates calculated exclusively in terms of failures per unit-year rather than failures per demand? The level of detail of the failure analysis in the paper suggests that the raw data were sufficient to distinguish between time- and demand-related failures and allow both failure rate per-unit time and failure-probability per demand to be calculated.

Second, although the RAM data were not conclusive and judgments about the relative merits of diesels versus gas turbines probably were outside the scope of this study, did the authors develop any insights into the optimum selection for various industrial, commercial building, and institutional applications?

**P. F. Albrecht** (General Electric Company): A key parameter for standby units is starting reliability. The text mentions starting reliability but does not give any statistics. I cannot determine how starting failures were treated. I assume they were counted as forced outages.

Another important event is "failed while not running." This is not discussed at all. These could be failures discovered by periodic testing or inspection. Thus, test frequency may be a very important parameter in determining operating availability. It does not appear that this factor was considered in the survey.

Basically, the authors have analyzed the data using a conventional two-state model approach. They have expressed results on both a period-hour and operating-hour base to suit a "variety of applications." In fact, a two-state model is not very useful for standby units, and the results presented are therefore difficult to use.

**Pat O'Donnell** (El Paso Natural Gas Company): The reliability survey data on diesel and gas-turbine generators collected by ARINC Research Corporation appear to provide an excellent data base for meaningful reliability studies on important equipment types. The results reflect an obvious intense and praiseworthy effort in assembling a well-organized and complete data base for its intended purpose. Personal plant visits, as reported in the paper, especially add to the credibility of the results. Although particular details on applications and circumstances of use are not listed, the number of plants, the number of power systems, periods of time, and the number of events counted are impressive and reflect very credible results.

As with any reliability survey, a given set of results always leads to questions and concerns related to any user's given experience background, and usually further manipulation and analysis of the data are required. My intent is to point out some questions and concerns that, hopefully, will lead to additional analyses. In many industries, economic studies comparing gas turbine/generators with reciprocating engine/generators are usually straightforward and simple, with the exception of reliability comparisons and the effects of reliability on economics. Hopefully, these new data will add a missing link and allow more meaningful and accurate comparisons to be made.

An important concern in evaluating the categories surveyed is the speed of the diesel engine. Typically, continuous duty units are designed and applied to run at slower speeds than standby units. "High-speed" reciprocating engines (e.g., 1200 r/min and higher) require frequent maintenance and predictable repair downtime compared with slow-speed units that simply do not experience the same mechanical stress. One would expect a higher failure rate or higher frequency or maintenance, or both, for high-speed engines than for slower speed engines. Will the data allow speed ranges to be identified and corresponding reliability comparisons to be made?

Starting reliability is an important concern, especially for standby or emergency applications. It is unclear if the failures shown for "starting systems" also mean "failures to start." The data might, in some cases, reflect component failures even though the generator set successfully started. Actual "failures to start" would be beneficial in comparing diesel engines with gas turbines, since there are many who believe there is a significant difference. Whether a unit is locally or remotely started normally requires an assessment of reliability in starting. The impact of a failure to start is obviously different when personnel are on site to address a problem immediately as compared with when personnel must travel to a site to address a problem.

Another concern that is important to reliability is the type of starter used. It appears from the data presented here that air and electric motors are two types of starters used. In the natural gas industry, expansion gas turbines are commonly used for starting turbines and definitely are much more reliable than electric starters, primarily because of the available gas supply. Can a closer analysis be made comparing the air systems with the electric motors?

Also regarding starting, the results reflect significant difference in failure rates between "continuous" and "standby" diesel units and "continuous" and "standby" gas turbines and state that this may be related to differences in actual in-use hours. One would also expect that the frequency of starting is different and might impact failure rates. Can this analysis be made?

The fuel system appears to be a significant contributor to failures. It is interesting that on "continuous" gas turbines, the fuel system is the least reliable part of the package. It would be beneficial if reasons could be identified. Are different types of fuels involved? If so, will the data collected allow comparing failure rates for each type?

The tabulated results in Appendix II, Tables VIII and IX, of the report suggest that possibly not all diesel units are truly packaged type (e.g., cooling towers, water heater). Can the data be refined further to identify which units are truly self-contained?

A last point of concern regards maintenance. A reciprocating engine is expected to be more demanding in routine maintenance requirements than a gas turbine. To qualify this statement, this is to say that it is easier to leave a gas turbine unattended, once it is running, than it is a reciprocating engine, especially if they are running continuously. There are various reasons why, some of which are the way the units are typically instrumented for protection and the number of moving parts and wear. If the MTBCM data include scheduled maintenance cycles, a comparison of failure rates for different cycles would be meaningful.

The results here reflect an excellent collection of data and should be very beneficial in making comparisons of these equipment types. In the application of reliability data an inevitable concern is the reason for differences in reliability between equipment types and applications. One obvious practical benefit is to be able to identify what corrective actions are encouraged by

Copyright © 1998 IEEE. All rights reserved.

TABLE XII
COMPARISON OF DIESEL AND GAS-TURBINE STARTING RELIABILITY STUDIES

| Source | Number of Units | Start Attempts | Failed Starts | Starting Reliability |
|---|---|---|---|---|
| **Gas-Turbine Starting Reliability Studies** | | | | |
| ARINC Research Corporation[1] | 7 | 3,555 | 17 | 0.9952 |
| Booz, Allen & Hamilton[2] | 34 | 12,316 | 80 | 0.9935 |
| Kongsberg Dresser Power[3] | 38 | 17,749 | 141 | 0.9921 |
| AT&T[4] | 28 | 13,644 | 106 | 0.9922 |
| **Diesel Starting Reliability Studies** | | | | |
| ARINC Research Corporation[1] | — | — | — | 0.97 |
| Electric Power Research Institute (EPRI)[5] | 155 | 22,320 | 83 | 0.9963 |
| Consumers Power Company—Big Rock Point[6] | 2 | 669 | 12 | 0.9821 |
| Northeast Utilities—Millstone[6] | 3 | 652 | 3 | 0.9954 |
| Northeast Utilities—Connecticut Yankee[6] | 2 | 642 | 2 | 0.9969 |
| Commonwealth Edison Company—Zion[6] | 4 | 1,693 | 30 | 0.9823 |
| Consolidated Edison Company of New York, Inc.—Indian Point[6] | 6 | 424 | 4 | 0.9906 |
| Institute of Nuclear Power Operations (INPO)[7] | ← Data not available → | | | 0.9120 |
| EPRI[8] | ← Data not available → | | | 0.9829 |

[1]ARINC Research Corporation. *Final Report—RAM Study of Diesel and Gas-Turbine Generator Sets*. Publication 4219-03-01-4803, October 1988.

[2]Booz, Allen Applied Research. *Small Gas Turbine Start Investigation*, April 1970.

[3]Kongsberg Dresser Power. Internal Study Comparing Diesels with Gas-Turbine Engines (unpublished), 1984.

[4]AT&T. Internal Study for Gas-Turbine Reliability (unpublished), 1980.

[5]Electric Power Research Institute. *Reliability of Emergency Diesel Generators at U.S. Nuclear Power Plants*. NSAC 108, September 1986.

[6]U.S. Nuclear Regulatory Commission. *Nuclear Computerized Library for Assessing Reactor Reliability (NUCLARR)*. NUREG/CR-4639 EGG-2458, Volume 5, RX, June 1988.

[7]Institute of Nuclear Power Operations. *Nuclear Plant Reliability Data System, 1982 Annual Report*, 1983.

[8]Electric Power Research Institute. *Diesel Power Reliability at Nuclear Power Plants: Data Preliminary Analysis*. NP-2433, June 1982.

a user and which are encouraged by a manufacturer. Hopefully, additional analyses will be made addressing the concerns of this discussion and other similar concerns stimulated by the results presented here.

## Closure

The authors appreciate the thorough review and the many constructive comments and recommendations offered in the preceding discussion. While space limitations prohibit addressing all of the suggestions offered, a response to some of the more frequently cited comments is provided in the following paragraphs.

Obtaining data on unit starting reliability was one of the objectives of the study. However, most of the plants surveyed did not record data necessary to determine starting reliability. While it was often possible to identify start failures through interpretation of the maintenance event descriptions, the number of start attempts was typically not retrievable. In addition, our discussions with plant personnel indicated that many start failures were corrected through minor adjustments that were usually not documented in maintenance or operating records. Because of the limited data available, starting reliability statistics were not presented in the paper.

Some information on starting reliability was obtained during the study. These data are presented in Table XII. Seven gas-turbine units provided data on start attempts and start failures during periodic testing. To obtain estimates of diesel starting reliability, we surveyed plant managers of four of the standby diesel plants to estimate the number of start failures in 100 attempts. We then averaged these estimates to obtain an estimated diesel starting reliability. Table XII also shows a comparison of values for diesel and gas-turbine starting reliability.

With regard to maintenance, data were categorized on the basis of the nature of the individual maintenance task performed for each event. The maintenance codes do not refer to the cause of failure or the overall maintenance program for the plant. Additional reduction and analysis of the collected data would be required to investigate these issues.

An important feature of the computerized data base developed in this survey is the ability to sort and arrange the data to analyze specific issues regarding plant configuration, design, or operation. The preceding discussions have provided several beneficial suggestions for additional analyses. The results of additional data analyses or data collection activities under this program will be discussed in subsequent papers.

## REFERENCES

[1] *Government-Industry Data Exchange Program Remote Terminal Users Guide*, GIDEP Operations Center, Oct. 1987.

[2] *Power Reliability Enhancement Program (PREP) GO Reliability/Availability Data Bank Development Effort*, Illinois Inst. Technol. Res. Inst. Reliability Analysis Center, Aug. 1984.

[3] *IEEE Recommended Practice for Design of Reliable Industrial and Commercial Power Systems*, ANSI/IEEE Standard 493, 1980.

[4] *IEEE Trial-Use Standard Definitions for Use in Reporting Electric Generating Unit Reliability, Availability, and Productivity*, ANSI/IEEE Standard 762, 1980.

[5] *Nuclear Power Reliability Data System (NPRDS) Data Retrieval Manual*, Inst. Nuclear Power Operations, INPO 83-034, Rev. 4, Sept. 1986.

[6] *Major Fixed Command, Control, and Communications Facilities Power Systems Design Features Manual*, U.S. Army Corps of Engineers, Huntsville Division, HNDSP-82-043-SD, Ch. 9, Aug. 1986.

[7] *RAM Study of Diesel and Gas Turbine Generator Sets*, ARINC Res. Pub. 4219-03-01-4803, Oct. 1988.



Copyright © 1998 IEEE. All rights reserved.

**Clayton A. Smith** received the B.S. degree in aerospace engineering from the University of Maryland, College Park.

He is a Staff Engineer for ARINC Research Corporation. He is responsible for the development of data bases for many reliability, availability, and maintainability projects, including those for the Electric Power Research Institute (EPRI), the Gas Research Institute (GRI), petroleum refineries, electric utilities, and the Army Corps of Engineers. He also conducts analyses to investigate component criticality, cost optimization, and modification evaluations.

**Michael D. Donovan** (A'86) received the B.S. degree in mechanical engineering from Vanderbilt University, Nashville, TN, and the M.S. degree in industrial management from the Georgia Institute of Technology, Atlanta.

He is the Manager of the Industrial Process Group of ARINC Research Corporation and is responsible for the company's engineering services to clients in energy, petrochemical, and manufacturing industries.

Mr. Donovan is Chairman of Station Operations for the Energy Development and Power Generation Committee of the Power Engineering Society and is a Registered Professional Industrial Engineer in the State of Georgia.

**Michael J. Bartos** received the B.S. degree in mechanical engineering from Pennsylvania State University, University Park, in 1985.

He is currently a Mechanical Engineer in the Power Reliability Enhancement Program (PREP) with the U.S. Army Corps of Engineers, Engineering and Housing Support Center (EHSC). He has been with the PREP program since 1987. His experience with the program includes engineering support for operating power plants and efforts to enhance reliability, survivability, and operation/maintenance of critical command, control, communications, and intelligence facilities and utilities. He was with the U.S. Navy's Cruise Missile Branch of the Airborne Weapons Engineering Division where he served as a Project Engineer from 1985. His experience in the area was design verification, lot acceptance tests, and maintenance concerns. He is also involved in tutorial disadvantaged youth in the Washington, DC, area.

Copyright © 1998 IEEE. All rights reserved.

This page is intentionally blank

## Appendix M

# Reliability/Availability Guarantees of Gas Turbines and Combined Cycle Generating Units

By
Thomas E. Ekstrom

*IEEE Transactions on Industry Applications*
Vol. 31, No.4, July/August 1995, pp. 691-707.

Copyright © 1998 IEEE. All rights reserved.

This page is intentionally blank

# Reliability/Availability Guarantees of Gas Turbine and Combined Cycle Generating Units

Thomas E. Ekstrom

*Abstract*— **This paper is an updated and revised version of the 1992 ASME paper 92-GT-208 "Reliability measurements for gas turbine warranty situations." It recognizes that reliability performance is receiving significant and increasing attention in the bid requests for new gas turbine generating units. Reliability guarantees backed by liquidated damages clauses are becoming more the rule rather than the exception. But the power generation industry does not have a universally accepted set of reliability measurements, and the more commonly used measurements are not always used appropriately, nor are they sufficiently refined for the warranty situation.**

**This paper is intended to provide the guidance, structure, and refinement needed for meaningful reliability measurements and reliability warranties.**

**Four key areas of reliability measurement: starting reliability, running reliability, availability and equivalent availability are separately explored. Within each of these areas there is the flexibility and the need to adapt the measurement system to the varied operating regimes and philosophies encountered such as: peaking versus continuous service, limited scopes of supply, different levels of maintenance intensity, chargeable versus nonchargeable outage events and emotional/political/optical acceptability (i.e., 3% Forced Outage Factor versus 40% Forced Outage Rate). Warranty structuring rationale and suggested contract language are provided to address such needs as a rigorous and explicit operating log, certification of data, measurement uncertainty, assurance of readiness, and risk assessment.**

**The suggestions presented herein have been constructed with logic and fairness. They have been applied with good acceptance to over 30 contracts in the past three years. This paper will be beneficial to all architect engineers, utilities, independent power producers, and OEM's that become involved with the measurement of reliability or the structuring of reliability warranties.**

## I. Introduction

IT HAS been said that gas turbine value is measured in terms of performance and reliability. And to insure the receipt of that value, the electric utility industry is increasingly seeking warranties on both performance and reliability in its contracts for new gas turbine power plants. But common practices and the available standards for measuring reliability are inadequately structured for warranty situations. This paper addresses these needs. In this paper the word "reliability" is frequently used in the broad sense. Reliability warranties may typically apply to any of the following specific measurements:

Paper ICPSD 94–52, approved by the Power Systems Engineering Committee of the IEEE Industry Applications Society for presentation in part at the 1992 American Society of Mechanical Engineers Meeting, and in full at the 1994 IEEE Industry Applications Society Annual Meeting, Denver, CO, October 2–7. Manuscript released for publication February 13, 1995.

The author is with GE Power Generation Engineering, Gas Turbine Applications Engineering, Schenectady, NY, 12345-6001 USA.

IEEE Log Number 9411435.

*1) Starting Reliability:* The expected likelihood that a generating unit can successfully start on demand and/or within a given time period.

*2) Running Reliability:* The expected likelihood that a generating unit can provide electricity when requested. Measurements of running reliability deal with unplanned events and generally exclude all outages associated with scheduled maintenance activities.

*3) Availability:* The expected portion of period time (typically a year) that a generating unit is capable of providing electricity. Availability considers all outage activity, both planned and unplanned, forced and scheduled.

*4) Equivalent Availability:* Similar to availability but further refined by capacity adjustments to reflect the cumulative energy production capability. It becomes the expected portion of *energy output* available over a period of time (typically one year) and is applied where the availability measurement must also reflect the effect of reduced capacity operating modes. The concept of "Equivalent . . . " can also be applied to running reliability measurements.

## II. Current Standards and Data Collection Systems

Technically speaking, the domestic (USA) electric utility industry has one formal standard for reliability terminology. It is ANSI/IEEE Standard 762-1987, entitled "IEEE Standard Definitions for Use in Reporting Electric Generating Unit Reliability, Availability, and Productivity" [1]. It was written for base-loaded power plants and defines no less than 66 reliability-related terms plus some 25 performance indexes (none of which are explicitly named "reliability" or "running reliability.") IEEE Std 762 is fairly new and to the author's current knowledge, there are no industry databases or operator data collection systems that are strictly based on the IEEE Std 762 definitions. The more commonly used definitions in the United States are those of the North American Electric Reliability Council (NERC), as applicable to its Generating Availability Data System (GADS). A significant number of domestic (USA) utilities supply annual operating data to the GADS data base. The NERC GADS definitions are slightly different from the IEEE Std 762 definitions but NERC is gradually changing its definitions to be more in line with the IEEE standard. And despite the IEEE and NERC definitions, the majority of utilities still use their own "home-grown" traditional measures which tend to combine classical reliability theory with specific system configuration, operating or administrative needs.

0093–9994/95$04.00 © 1995 IEEE

Copyright © 1998 IEEE. All rights reserved.

The objectives of IEEE and NERC relate to the gathering and presenting of *broad system operational data* on a consistent basis. But component failure rate data and failure cause data have not been rigorously kept and no effort has been made to assess maintenance intensity effect. *Force majeure* events are not subtracted. Downtime is not segregated into active repair effort, waiting time, or unapplied time. Consequently, the IEEE and NERC definitions structures have not been adequate to support the needs of equipment reliability engineers nor to support real-world reliability/availability warranties. Nonetheless, the concepts, definitions, and formulas of IEEE Std 762 and NERC GADS still provide an excellent starting point. The terms and recommendations in this paper utilize, expand upon, and generally flow with these "standards."

Another database receiving increasing attention is the Operational Reliability Analysis Program (ORAP) which was devised by GE in 1976 and is currently managed by Strategic Power Systems Inc., a private company in Albany, NY. It utilizes the old standard terminology of Edison Electric Institute but was set up as an "events-based" database to specifically serve reliability engineering needs. It presently includes more than 4500 unit-years of comprehensive gas turbine operating data and provides fleet performance reports and failure rate data to the users, EPRI, architect engineers and the OEM's. Today, with the ever-increasing flexibility of computers, systems such as the ORAP system have the capability to support the most detailed categorization of events and then provide for multiple analysis and reporting. From one set of operating data, the computer can generate the standard fleet performance reports, the appropriately categorized NERC GADS data (or results), the utility's preferred internal performance report and a unit or plant warranty performance level measurement set under custom-tailored warranty conditions.

## III. Starting Reliability

Starting Reliability (SR) is easily understood as the ratio of the number of successful starts to the number of attempted starts.

$$\text{Starting Reliability} = \frac{\text{successful starts}}{\text{attempted starts}} \quad \text{(NERC)}. \qquad (1)$$

However, when starting reliability is to be measured carefully, there are a number of "special situations" that must be considered, adjusted for, and sometimes contractually qualified. The most typical are:

- multiple initiations of the "start" command without intervening corrective action(s),
- "test" starts and "maintenance" starts,
- starting failures caused by other than contract-furnished equipment,
- starting time allowance period,
- operator or procedural errors,
- start sequence aborts by operator or dispatcher discretion with no equipment failure,
- load level reached for a "successful start," and
- starting reliability measurements for components, subsystems and partial plants.

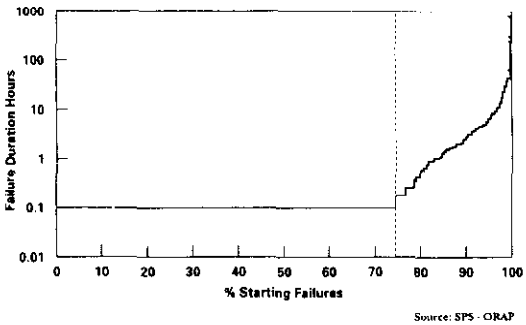


Fig. 1. Starting failure outage times. Cumulative distribution—MS7001E/EA units 1978–1989.

To illustrate the importance of the above "special considerations," consider the concept of the starting time allowance period as incorporated in the IEEE standard but not in the NERC GADS or standard ORAP definitions. The IEEE standard allows that repeated initiations of the starting sequence, within a user-specified period (typically 20 or 30 min) be counted as a single attempt. The significance of this distinction is evident by the fact that 74% of the starting failures (see Fig. 1) reported in the ORAP data base under the NERC definition are followed by a successful start within six minutes time of the "failure" and have minimal impact to the service demand request. When a five-year ORAP history of GE MS7001E/EA units was assessed the starting reliability averaged 93% by the NERC definition but 98.2% by the IEEE Std 762 definition!

The IEEE Std 762 formula for starting reliability basically enables fair treatment of all the "special situations" described previously by focusing only on the number of chargeable failures to start. This is accomplished by making a subtle formula change to

$$\text{Starting Reliability} = \frac{\text{SS}}{\text{SS} + \text{SF}} \quad \text{(IEEE)} \qquad (2)$$

where SS = [Chargeable] Starting Successes, and SF = [Chargeable] Starting Failures.

IEEE Std 762 then offers some basic qualifications through its definitions. But warranty situations require expanded qualification as suggested here along the lines of IEEE Std 762.

A *Qualifying Starting Attempt* is the action intended to bring a unit from shutdown to the in-service state under conditions that qualify for inclusion in the warranty. Repeated initiations of the starting sequence within the allowable specified starting time period or without accomplishing corrective repairs are counted as a single attempt.

A *Chargeable Starting Success* is the occurrence of bringing a unit through a qualifying starting attempt to the in-service state within a specified period, as evidenced by maintained closure of the generator breaker to the system.

A *Chargeable Starting Failure* is the inability to bring a unit through a qualifying starting attempt to the in-service state within a specified period for failure reasons chargeable to the warranty. Repeated failures within the specified starting period are to be counted as a single starting failure.



Copyright © 1998 IEEE. All rights reserved.

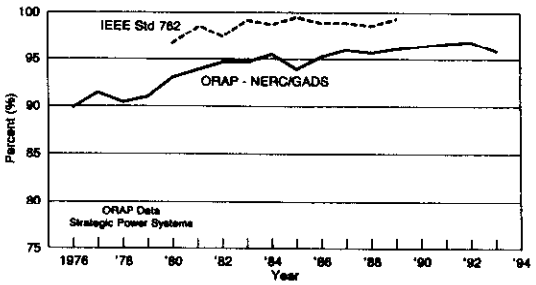


Fig. 2. Starting reliability MS7001 domestic units.

A third formula for starting reliability is used in the ORAP system for engineering analysis of component and subsystem performance.

$$\text{Starting Reliability} = \frac{SA - SF}{SA} \quad \text{(Engineer's)} \qquad (3)$$

where SA = Qualifying Starting Attempt, and SF = [Chargeable] Starting Failures.

This "Engineer's" formula, like the IEEE formula, accommodates the "special situations" fairly well and actually offers the most representative measure of equipment performance. But it tends to err on the optimistic side while the NERC-GADS and IEEE formulas tend to err on the pessimistic side. For example, a starting attempt aborted midway through the start sequence by the operator, but not associated with any equipment failure, would be counted as a failed start by NERC-GADS, would not be counted at all under IEEE Std 762, and would be counted as a successful start by this ORAP formula.

When selecting a measurement formula and warranty context for starting reliability guarantees, there need to be rules: What is chargeable, and what is not? The maintenance-readiness environment should be addressed. And the measurement should statistically reflect the inherent starting reliability of the equipment. Financial penalties should not be incurred in a warranty situation simply due to the *natural randomness* of starting failures. Here are some examples of SR warranty considerations:

1) Repair verification starts and failures-to-start from equipment not furnished under the contract should not be chargeable to the warranty.
2) If the equipment has not been successfully started within a reasonable period (e.g., 30 days) then, for compromise of readiness, the next starting attempt should not be considered a qualifying start attempt.
3) In order to realize the significantly higher SR levels associated with the IEEE starting time allowance clause, there should be technically competent supervision and appropriate maintenance personnel available at site to expeditiously facilitate correction of the minor and "procedural" errors that typically account for the five-minute start-up delays. Remotely dispatched sites typically do not have this benefit. Fig. 2 illustrates the numeric magnitude of this difference.

A good measure of starting reliability considers measurement precision and representativeness, commonly referred to as measurement uncertainty. It takes 100 start attempts for the data alone to be precise to the nearest one percent. And it takes 1000 start attempts for the measurement to statistically represent the true-inherent equipment SR with one-percent accuracy at the 90% confidence level! Therefore it is always recommended to combine the starts data from all similar units at the same site and maybe for multiple years to obtain a better and more representative data set. Obviously a machine that is started less than 50 times per year is a poor candidate for a single unit starting reliability warranty. Here is a way, however, that this measurement uncertainty can be fairly addressed.

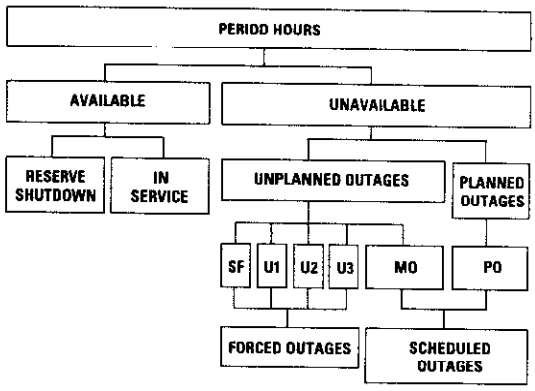


Fig. 3. Conceptual classification of outage time (NERC GADS).

If the starting reliability measurement must be made with an accumulation of less than 500 start attempts, the statistical measurement uncertainty shall be recognized by providing an allowance from the guarantee level. The Measurement Uncertainty Allowance shall adjust the point of damages initiation based on the cumulative binomial probability function and the actual number of start attempts so as to assure with 75% confidence that the indicated (measured) shortfall is due to equipment deficiency rather than the random nature of failure occurrences.

The author recommends that the IEEE Std 762 formula be used for starting reliability guarantees since it is most universally acceptable, allows focus on only the chargeable starting failure events, and is already set up as a published national standard. Starting reliability guarantees are not recommended for base load and continuous service units that experience infrequent starting. Appendix A provides a suggested generic write-up for a multi-unit Starting Reliability warranty.

## IV. Outage Classifications

Before discussing running reliability and availability, which are primarily time-based measurements, one should review the principal classifications of outage time. For this, a picture is worth a multitude of words and this "picture" (see Fig. 3) is based on the familiar NERC GADS definitions.

1) SF = *Starting Failure*. Under IEEE Std 762, this is called a Class 0 Unplanned Outage.
2) U1 = *Immediate Unplanned Outage*. IEEE Std 762 call this a Class 1 Unplanned Outage and both NERC and IEEE allow assignment to this classification from

Copyright © 1998 IEEE. All rights reserved.

either the in-service (running) state or from the shutdown (nonrunning) state. IEEE additionally permits scheduled outage extension time to be reclassified as Class 1 depending on the cause of the extension. The ORAP reporting system takes a different approach to U1, U2, and U3 forced outages which will be discussed later. U1 failures are obviously the most critical failure events.

3) U2 = *Delayed Unplanned Outage*. Similar to U1 but less urgent; NERC-GADS generally allows the machine to delay the outage to the end of its daily run. IEEE Std 762 calls this a Class 2 Unplanned Outage and more specifically requires that unit be removed from the in-service state within six hours.

4) U3 = *Postponed Unplanned Outage*. Both NERC GADS and IEEE identify this as an outage that can be postponed beyond the U2 level of urgency but must be removed from the in-service state before the end of the next weekend. IEEE Std 762 identifies U3 outages as Class 3 Unplanned Outages.

5) MO = *Maintenance Outages*. IEEE Std 762 identifies maintenance outages as Class 4 Unplanned Outages and with NERC GADS qualifies these outages as those that can be delayed beyond the next weekend but must be attended to before the next [long-lead] planned outage. The ORAP definition of maintenance outage is slightly broader as it picks up a few of the U2 outages and many of the U3 outages. Note that maintenance outages occur for unplanned reasons but can be sufficiently delayed to be classed as "scheduled" outages.

6) PO = *Planned Outages*. Both IEEE Std 762 and NERC GADS identify planned outages as those that are scheduled well in advance and have a predetermined duration. Extensions of planned outage are noted as such under NERC GADS and continue to be counted as more planned (and scheduled) outage hours. But according to IEEE, planned outage extensions may be retained as unplanned outage extensions or reassigned to Class 1 or Class 0 unplanned outages depending upon extension cause.

*Administrative Outage Hours* (AOH) are a category not identified under either IEEE Std 762 or NERC GADS but very necessary for warranty situations. It provides a charging category (or location) for outage hours that might not be chargeable under the warranty such as *force majeure* events, waiting time, nonapplied time, noncovered equipment outages, etc. Furthermore, it can also be used to separate the service intensity/effectiveness aspects from the nominal inherent equipment aspects in cases where the warrantor is not responsible for providing the maintenance service. In application, the AOH hours are removed from the IEEE or NERC unplanned outage hours and then either removed totally from the measurement or credited as available hours.

As mentioned previously, the basic ORAP reporting system treats the forced outage categories differently from the NERC GADS and IEEE classifications. The distinction primarily relates to whether the unit was running or in the shutdown state at the time of initiation of the outage state. The four standard ORAP forced outage categories are:

1) FS–*Starting Failure*
2) FOA–*Automatic Trip* from the running state
3) FOM–*Manual Trip* from the running state
4) FU–*Forced Unavailability* from the shutdown state.

The ORAP maintenance outage categories roughly correspond to the NERC GADS' MO and PO and are:

1) MU–*Maintenance Unscheduled*
2) MS–*Maintenance Scheduled*.

The ORAP outage classifications plus identification of noncurtailing events particularly serve the reliability engineering needs and enable the measurement of failure rate from the running state. MTBF data for gas turbines are generally more appropriate when based on service time and failures from the running state. The ORAP system also reports concurrent maintenance activities to assist design engineers and to better support MTTR assessments. NERC GADS is planning to pick up these capabilities.

As can be seen from above, the NERC GADS, SPS-ORAP, and IEEE outage classification systems are somewhat similar, *but not identical*. The variations in outage classification definitions plus operator judgement on classifications are quite minor in the aggregate of many unit-years of data. But in the context of measuring performance for a single unit for a single year, and then considering financial penalty or "liquidated damages," such variations can be extremely important. A well-written warranty contract document will greatly reduce future conflict over rules and operator interpretations.

## V. Running Reliability

*Reliability* is defined (in essence) as "the probability that the equipment, or system, can fulfill its function *for the planned period of need*." But while there is widespread general agreement with this concept, there is unfortunately a large number of significantly different measurement formulas being applied to quantify "reliability." This group is often referred to as "Running Reliability" (RR) measurements (to distinguish them from starting reliability measurements) and their one point of commonality is that they all generally exclude planned shutdowns from the measurement.

For the sake of reliability understanding, and to more quickly relate to the *many* formulas faced by users, A/Es and OEM's; some of the more commonly used formulas will be defined, explained and compared for different operating service profiles. Please note that some formulas are better suited to specific warranty or engineering situations than are other formulas.

*A.* $RR = (1 - FOF)$ [GT traditional formula] (4)

where FOF is the Forced Outage Factor and

$$FOF = \frac{\text{Forced Outage Hours}}{\text{Period Hours}}. \quad (5)$$

The author's company has traditionally used this formula for reliability because: 1) the Forced Outage Factor tends to be somewhat independent of service duty, and 2) the FOF can



Copyright © 1998 IEEE. All rights reserved.

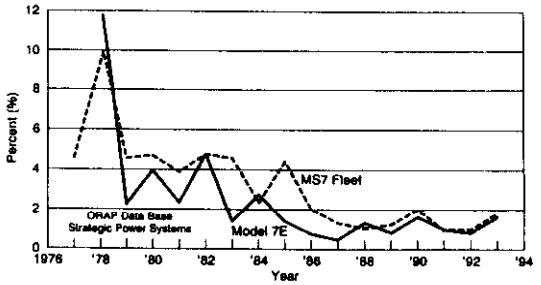


Fig. 4. Forced outage factor. MS7001 domestic (USA) units.

be directly subdivided to the contributing elements. Forced Outage Factor is formally defined by both NERC GADS and IEEE Std 762; it typically runs in the 1% to 4% range (see Fig. 4) and is a reasonably well accepted reliability measure for high use machines. It is the reliability measure used in ORAP. The minor problem with this measure is that while an FOF of 2% yields a good reliability number of 98%, most users/operators are not impressed with the thought of 175 forced outage hours per year on machines used only 100 to 500 service hours per year. The more common and preferred form of this traditional GT formula, is as follows:

$$\text{RR} = \frac{\text{Period Hours} - \text{FOH}}{\text{Period Hours}}. \quad (6)$$

For warranty situations, FOH are *chargeable* forced outage hours.

*B.* $\text{RR} = (1 - \text{UOF})$ ["UOF" formula] (7)

where UOF is the Unplanned Outage Factor and

$$\text{UOF} = \frac{\text{FOH} + \text{MOH}}{\text{PH}} \quad (8)$$

FOH Forced Outage Hours,
MOH unplanned Maintenance Outage Hours, and
PH Period Hours.

This UOF formula is similar to the traditional GT formula (4) except that it includes all unplanned outages (forced plus maintenance). Some ORAP historical data has shown that the Maintenance Outage Factor runs at about two-thirds of the Forced Outage Factor. So the "example" machine with a 2% FOF might have 1.3% MOF for a total of 3.33% Unplanned Outage Factor and a "UOF Reliability" of 96.7%.

*C.* $\text{RR} = (1 - \text{FOR})$ [utility FOR formula] (9)

where FOR is the Forced Outage Rate and

$$\text{FOR} = \frac{\text{Forced Outage Hours}}{\text{Forced Outage Hours} + \text{Service Hours}}. \quad (10)$$

The Forced Outage Rate (FOR) is a long established utility industry measurement formally defined by both NERC GADS and IEEE. It works fairly well on high use machines and it is often used for utility reliability calculations including loss of load probability planning. It loses its appropriateness and attractiveness when applied to low usage machines in standby or traditional "peaking" service. The "example" machine with 175 forced outage hours and 100 service hours per year has an FOR of 63.6% and a reliability of 36.4%! The optics are bad. Part of the problem with FOR, as a measurement, is that no credit is given for reserve shutdown time when the unit is fully available on standby. Another part of the problem is that *all elapsed time* forced outage hours (FOH) are debited even though a large percentage of the FOH might occur during periods of nondemand.

*D.*
$$\text{RR} = \frac{\text{PH} - \text{FOH} - \text{SOH} - \text{AOH}}{\text{PH} - \text{SOH} - \text{AOH}} \quad (11)$$
[European formula]

where

PH Period Hours (one year—8760 h),
FOF Forced Outage Hours,
SOH Scheduled Outage Hours, and
AOH Administrative Outage Hours.

This formula, seen frequently in European bid specs, is variously called "Forced Outage Availability" or "Running Availability" or just plain "Availability." It is the truest measure of the time-based probability for avoidance of forced outages and it is fully suitable as a warranty measure for units of any service application whether peaking or continuous service. The "Administrative Outage Hours" (AOH) category admirably covers any number of "stop-the-clock" provisions for outage events that should not be charged against the equipment. To continue the example: If the machine with 175 forced outage hours and 100 service hours also had 200 scheduled outage hours plus 20 administrative outage hours, its annual "running reliability" would be 97.95%. The European formula also has alternate forms that sometime appear in bid specifications

$$\text{RR} = \frac{\text{SH} + \text{RSH}}{\text{SH} + \text{RSH} + \text{FOH}} \quad \text{[European Version 2]} \quad (12)$$

where SH = In Service Hours (fired hours), RSH = Reserve Shutdown Hours, and FOH = Forced Outage Hours, and also

$$\text{RR} = \frac{\text{Available Hours}}{\text{Available Hours} + \text{FOH}} \quad \text{[European Vers. 3]}. \quad (13)$$

*E.* $\text{Reliability} = \frac{\text{MTBF}}{\text{MTBF} + \text{MTTR}}$ [textbook formula](14)

where MTBF = Mean Time Between Failures, and MTTR = Mean Time To Repair. This classical textbook formula [2] is used in the EPRI UNIRAM program and is often applied to components or subsystems. It originated as a measurement of reliability for systems that were expected to be in continuous service such as telephone and communications systems. If the MTBF is measured in period time (clock/calendar hours), the result numerically approximates the GT traditional formula (4). If the MTBF is measured in service hours, the result numerically approximates the utility FOR formula (9). This formula and the terms MTBF and MTTR are more often tools of the reliability engineer than the power plant operator. There are at least two reasons why this is not a good formula, or measure, for warranty purposes: 1) The terms MTBF and

Copyright © 1998 IEEE. All rights reserved.

MTTR are derived, rather than directly-measured values, and 2) it tends to be overly sensitive to event rate.

*F.* RR = (1 - CFOR) [corrected FOR formula] (15)

where

$$\text{CFOR} = \text{Corrected Forced Outage Rate}$$

$$\text{CFOR} = \frac{(\text{FOH})(\text{DDF})}{(\text{FOH})(\text{DDF}) + \text{SH}} \quad (16)$$

and

FOH Forced Outage Hours,
DDF Daily Duty Factor,
(Fired Hours per Start)/24, and
SH Service Hours.

The Corrected Forced Outage Rate (CFOR) is an attempt to more fairly apply the concept of Forced Outage Rate (FOR) to low usage situations such as "peaking" duty. See [3] for a complete discussion of this approach. This formula is purported to be an applied approximation of a four-state Markov model (with which some utilities are experimenting), and through the Daily Duty Factor (DDF) it recognizes that much of the forced outage repair time is accrued when the unit is not in demand (and maybe not even being worked on). For the original example machine of 175 forced outage hours and 100 service hours, we might ascertain that the average fired hours per start is 4.0. That gives a daily duty factor of 0.167, a CFOR of 6.8%, and a reliability of 93.2%. Not as optically pleasing a number as the GT and European formulas produce but tremendously better than the 36.4% associated with the uncorrected forced outage rate formula (9). This is a fair reliability warranty measurement for peaking units but it depends on a derived (or arbitrary) correction factor. It has seen little exposure and even less acceptance.

*G.* $\text{RR} = e^{-(\lambda)t}$ [mission reliability] (17)

where $e$ = the base of the natural log (2.71828), $\lambda$ = the failure rate in events per hour which is also equivalent to 1/MTBF, and $t$ = mission time in hours. Mission reliability is a classical reliability measurement tool and represents the probability that a mission of time ($t$) will be successfully completed once started. Mission reliability is extensively used in military and aerospace design and is most applicable to continuously functioning components or systems where there is no opportunity for in-service repair. Unlike all of the foregoing reliability definitions (or formulas), mission reliability is oblivious to the repair or outage time. But it is still useful to estimate the probability of completing a run or to predict component failures. If the "example" machine has a 250-service-hour MTBF in peaking service, then the probability of completing a 4-h run is 98.4%, and that would be called the mission reliability. Mission reliability is an excellent design or system planning tool but a poor warranty measurement device.

*H.* $\text{RR} = 1 - \dfrac{\text{SF} + \text{FOE}}{\text{SF} + \text{SS}}$ [P.R. Index-1] (18)

where SF = Starting Failures, FOE = Forced Outage Events (from the running state), and SS = Starting Successes. The "Peaking Reliability Index" (PRI) is a fairly new approach that is quite attractive as a single, simple, fair, and overall measure for peaking or cycling duty units. It is strictly an "events" based extension of starting reliability that views the probability of not only starting, but completing a run. The simplicity of the measurement offers strong argument, particularly for warranty purposes. In the continuing example: As the peaking "example" machine sees 25 successful starts and 100 service hours, it likely endured one starting failure and maybe one forced outage event (a trip) from the running condition. The corresponding PRI Reliability is easily calculated at 92.3%.

*I.* $\text{RR} = 1 - \dfrac{\text{UOE}}{\text{SF} + \text{SS}}$ [P.R. Index-2] (19)

where

UOE Unplanned Outage Events,
SF Starting Failures, and
SS Starting Successes.

This alternate "Peaking Reliability Index" is a little broader than the first version, (18) above, in that it relates all unplanned planned outage events to the number of attempted runs. It is an excellent general measure of the freedom from unplanned outages. As the peaking "example" machine sees 25 successful starts, 100 service hours, one starting failure, one forced outage (trip) event, and one unplanned maintenance outage repair event accomplished during a period of no demand, the corresponding PRI-2 Reliability is calculated at 88.5%.

*J.* $\text{RR} = (\text{P}_{\text{avail}})(\text{SR})(\text{P}_{\text{mission}})$ [demand rel.] (20)

where $\text{P}_{\text{avail}}$ = probability of being available using the European formula (11), SR = Starting Reliability, and $\text{P}_{\text{mission}}$ = probability of completing the mission using the Mission Reliability formula (17). This demand reliability formula is receiving increased usage by utilities as a planning tool for peaking and daily cycling units. See [4], which is both specific and encompassing in nature, and is an excellent *collective* measure for most generating units. It has a disadvantage of producing poor appearing numbers for units that target for very long continuous runs (thousands of hours). It is also somewhat complex for implementation as a warranty measurement. If the base case "example" machine has a starting reliability of 96%, then the demand reliability is (0.9795)(0.96)(0.984) = 92.5%. This is perhaps the best measure of the probability that a generating unit in peaking service will provide electricity for a period of demand.

The dilemma of the existence and usage of so many formulas is tacitly acknowledged by the two leading USA norms, ANSI/IEEE Std 762 and NERC GADS, in that neither attempts to provide a specific mathematical formula for the terms reliability or running reliability.

The author has provided his rating of the applicability of the different running reliability formulas for use in different warranty and engineering situations (see Fig. 5). The basic criteria for the ratings on warranty measurements are as follows:

1) The measure should have a tangible feeling; that is, it should be a simple measure calculated directly from counting hours and/or events.


Copyright © 1998 IEEE. All rights reserved.

| | Formula for Running Reliability | Warranty Measurements: Peaking < 20 FH/start | Mid-Range <6,000 FH/year | Base >6,000 FH/year | Reliab. Engrg. & Systems Planning |
|---|---|---|---|---|---|
| A. Trad. GT | 1 - FOF | Fair | Good | V.G. | V.G. |
| B. "UOF" | 1 - UOF | Fair | Good | V.G. | V.G. |
| C. Utility FOR | 1 - FOR | V.P. | Poor | Good | Limited |
| D. European | $\frac{SH + RSH}{SH + RSH + FOH}$ | V.G. | V.G. | V.G. | Fair |
| E. Textbook | $\frac{MTBF}{MTBF + MTTR}$ | V.P. | Poor | Fair | Limited |
| F. Corrected | 1 - CFOR | Fair | Poor | N.A. | Limited |
| G. Mission | $e^{-(lambda)t}$ | V.P. | V.P. | Poor | V.G. |
| H. P.R.I.-1 | $1 - \frac{SF + FOE}{SF + SS}$ | V.G. | Fair | Poor | Fair |
| I. P.R.I.-2 | $1 - \frac{UOR}{SF + SS}$ | V.G. | Fair | Poor | Fair |
| J. Demand | $(P_{avail})(SR)(P_{miss})$ | V.P. | V.P. | V.P. | V.G. |

Abbreviations:

V.G. = Very Good
V.P. = Very Poor
N.A. = Not Applicable

Fig. 5.

2) The measure should closely describe the probability of the machine being able to deliver service when it is expected to be in service.
3) There should be zero or minimum dependence on arbitrary or approximated factors.
4) The resulting number should have political and emotional acceptability; i.e., if it is a measure of reliability, it should read above 90%.

Warranties on running reliability are reasonable for all service applications from peaking to continuous duty if the proper formula is selected. Warranty structuring for running reliability guarantees is concerned with good recordkeeping and careful outage management (including correct categorization of the forced outage events and the elements of restoration time). Furthermore, it is good to decide when writing the warranty terms whether the warranty is basically intended to nominally cover the equipment only or the equipment plus the user's and/or manufacturer's service system. Most manufacturers are not keen to pay liquidated damages for downtime hours where the user applied his limited maintenance resources to other projects because of other priorities.

Appendix B includes a generic sample warranty statement (plus qualifying clauses) for a running reliability warranty based on the "European" formula.

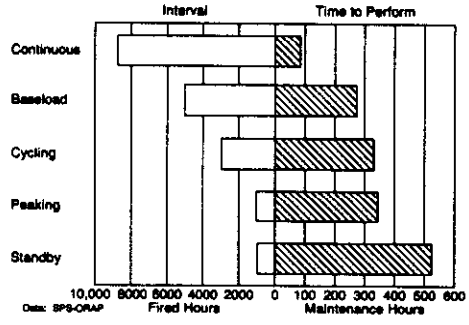


**SERVICE APPLICATION**

| Duty | Service Factor % | FH per Start | # of Insp. | Insp. Interval | Outage Hours |
|---|---|---|---|---|---|
| Continuous | 80-100 | >120 | 28 | 8675 | 88 |
| Base Load | 30-80 | >60 | 178 | 5048 | 276 |
| Cycling | 10-50 | 10-20 | 160 | 3206 | 339 |
| Peaking | 2-10 | 3-10 | 120 | 1072 | 355 |
| Standby | 0-2 | <4 | 2 | 1073 | 529 |

Fig. 6.

## VI. Maintenance Intensity

The time-based measurements of availability and running reliability generally count the grand total elapsed outage hours without differentiating actual applied repair time from unapplied time or planned tasks from ad hoc inspection activities. Some critical peaking or cycling units are overly maintained. And some minor two-hour repair tasks are logged at over a hundred outage hours because of low maintenance priority and idle time. Waiting time for replacement parts can have an even more serious effect. Availability can become more a measure of the service system than the inherent disposition of the equipment to perform. In reviewing ORAP data for many machines, it becomes obvious that the maintenance intensity effect is a very significant factor, it is driven by the operators's need for the equipment and it can be correlated to the service application. Fig. 6 exquisitely illustrates this effect.

The combustion inspection is a fairly standard gas turbine maintenance inspection, yet some operators perform it more often than others, and the *average* elapsed period hours taken to accomplish this inspection vary by 6 to 1 across the service application categories! From all 488 inspections the average amount of hours to complete is 306. But is the "average" representative? How about the manufacturer's instruction book? Reference [5] estimates 12 eight-hour shifts (or as little as 96 clock/period hours) for the MS7001 combustion inspection. The data indicate that this is reasonably demonstrated by the continuous duty units where the need and maintenance intensity are high, where three-shift maintenance is often employed, and where an offline, "replace-then-repair," parts correction technique is applied.

Copyright © 1998 IEEE. All rights reserved.

Maintenance intensity effect is such a significant factor that it must be addressed with every time-based availability or running reliability warranty situation. All maintenance may be performed by the equipment supplier, or agreement reached on specific maintenance conduct, or a warranty qualification set up to exclude excessive inspection events and excessive waiting time. The additional subclassifications of outage time necessitate more detailed recordkeeping and a separate set of warranty performance measurements that will be numerically different from the normal ORAP or NERC GADS measurements. Two (or even three) "sets of books" will have to be kept.

## VII. Availability

Availability is the popular measure of the *portion of time* that a unit is available to serve load because it is not on forced outage, maintenance outage, or planned outage. NERC GADS, ANSI/IEEE Std 762-1987 and ORAP recognize Availability as a key performance index and more specifically call it the "Availability Factor" (AF).

$$\text{Availability Factor} = \frac{\text{Available Hours}}{\text{Period Hours}} \qquad (21)$$

where

$$\text{Available Hours (AH)} = \text{PH} - \text{FOH} - \text{MOH} - \text{POH}$$

and

PH Period Hours (one year—8760 h),
FOH Forced Outage Hours,
MOH (unplanned) Maintenance Outage Hours, and
POH Planned Outage Hours scheduled well in advance).

Sometimes the "availability" label is applied to a more limited measurement, one that removes scheduled outage hours or some other element. These situations have been addressed in Section V. And when "availability" becomes concerned with capacity levels or deratings or plant-level ratings (as it should with multi-shaft combined cycle units) it belongs to Section VIII.

It should also be pointed out that while availability is an excellent measure for high usage machines, it is a relatively poor measure to be applied to low usage machines. In periods of low equipment need there is usually little incentive to accomplish scheduled or even essential maintenance in an expeditious manner. The inevitable stretch of outage time accrues unfavorably to the measurement. If the service application is low usage peaking service, it is advisable to consider a more appropriate running reliability guarantee along the lines of the "European" formula (11) or the "Peaking Reliability Indexes" (18), (19) or perhaps just a Starting Reliability guarantee.

The structuring of availability warranties is similar to the structuring of running reliability warranties. For both, the focus is on the management of outage time, but for availability there must also be some control over the conduct of planned maintenance. And, in recognition of the fact that there will be nonchargeable outage time, the warranty version of the availability formula is preferably written as follows:

$$\text{Availability of Warranty} = \frac{\text{AH}}{\text{PH} - \text{AOH}} \qquad (22)$$

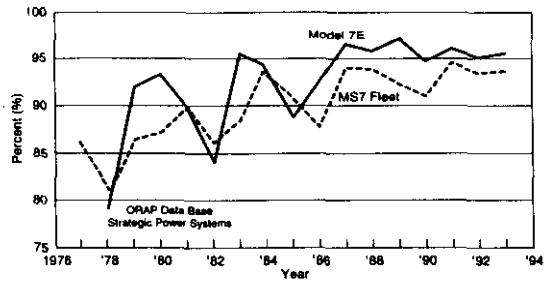


Fig. 7. Availability. MS7001 domestic (USA) units.

where Available Hours (AH) also equals PH – FOH – MOH – POH – AOH and

PH Period Hours (one year—8760 h),
FOH Forced Outage Hours,
MOH (unplanned) Maintenance Outage Hours,
POH Planned Outage Hours (scheduled well in advance), and
AOH Administrative Outage Hours (nonchargeable hours).

Fig. 7 traces the average annual availability performance of the domestic (USA) MS7001E/EA units participating in the SPS-ORAP data system. Appendix C includes a generic sample of an availability warranty statement with qualifying terms.

## VIII. Equivalent Availability

When the term "Equivalent" is applied to availability or reliability it could mean several things. Under IEEE Std 762-1987 and NERC GADS it extends the concept of availability or reliability to account for varying capacity levels and in effect becomes a measure of *energy production availability*. This is the context advocated by this author. In other uses, the term "equivalent" is sometimes associated with an approximation type measurement that may have nothing to do with capacity. Sometimes, the term "equivalent" might be used to distinguish the subsystem level or component level from the full system generation level. For example, the reliability performance of a problematic limit switch might be described in terms of its Equivalent Forced Outage Rate (EFOR) which was deduced from its MTTR divided by its (MTTR + MTBF). This paper, with its focus on warranty conditions, will look at three types (or levels) of "system" equivalent availability measurements which increasingly accommodate the capacity element.

### *A. Equivalent Availability (EA)—Level 1 "Block Method"*

The SPS-ORAP system has for many years been measuring the equivalent availability of combined cycle plants by merely extending the traditional time-based availability measurements to the full (multi-unit) plant. If one gas turbine of a four-unit combined cycle plant is unavailable, the plant may still be operated at about 3/4 capacity. If only the steam turbine is unavailable, and there are provisions (e.g., HRSG bypass stacks) for operating the gas turbines simple cycle, then about 2/3 of the plant capacity is available. During these periods



Copyright © 1998 IEEE. All rights reserved.

of partial equipment unavailability the plant is respectively considered to be at 75% or 66.7% equivalent availability. This measurement system is fully described by [6]. By this measurement method, each major generating block is treated as being either available or not available to contribute a pre-established percentage of the plant's output. This block method of equivalent availability measurement can also be calculated using the NERC and IEEE suggested procedures outlined later.

The IEEE Std 762-1987 procedure for calculating the Equivalent Availability Factor (EAF) first establishes the normal time-based availability factor then provides a deduct in the form of equivalent derated hours for operation at derated capacity levels.

$$\text{EAF} = \frac{\text{available hours} - \text{equiv. derated hours}}{\text{period hours}} \quad (23)$$

where

Available Hours

$$(\text{AH}) = \text{PH} - \text{FOH} - \text{MOH} - \text{POH}$$

Equiv. Derated Hours

$$(\text{EDH}) = \text{EUDH} + \text{EPDH} + \text{ESEDH}$$

and

PH Period Hours (one year – 8760 h),
FOH Forced Outage Hours,
MOH unplanned Maintenance Outage Hours,
POH Planned Outage Hours (scheduled well in advance),
EUDH Equivalent Unplanned Derated Hours,
EPDH Equivalent Planned Derated Hours, and
ESEDH Equivalent Seasonal Derated Hours.

The Equivalent Derated Hours are determined by multiplying the derated operating time (hours) by the percentage of derating. If a four-unit combined cycle plant experienced unplanned unavailability of one gas turbine for 100 period (clock-time) hours, it is treated as a 25% "block" derating of the plant. For calculation purposes the *plant* available hours are still 100 hours (100%) but there would be the accumulation of (0.25) × (100 h) = 25 equivalent unplanned derated hours (100 AH – 25 EUDH)/100 PH = 75% EAF. When the equipment capacity is limited, all hours are derated including not only the service hours, but also the reserve shutdown hours. Seasonal derated hours, as defined by IEEE and NERC and discussed later, are excluded or set to zero in the block method.

### *B. Equivalent Availability—Level 2 "Proportional Block Derating"*

A second example illustrates the "proportional" derating method which goes beyond the previous block method by considering deratings due to partial equipment failures. If another gas turbine generator in the same four-unit combined cycle plant had a generator rotor heating problem that prescribed a limit on output power to 92% of its rated capability for a period of 1000 h, then that gas turbine generating set would be operating with an 8% shortfall of capacity. By the proportional derating method, the *plant* would accumulate (0.08)(0.25)(1000) = 20 equivalent planned derated hours for the 1000 period hours of this generator shortfall. These 20 EPDH would not have been counted under the previous block derating method, but here at level 2 they are counted together with the other equivalent derated hours.

Using the Level 2 Proportional Block Derating Method, the plant is considered 100% available except when equipment failure reduces generating capacity. Then the amount of equivalent derating is established based upon engineering logic and negotiation. Accurately measuring the true amount of capacity shortfall is difficult as will become evident in the discussion of level 3 EAF. (Note: Appendix D provides a sample equivalent availability warranty based on the proportional block derating method).

### *C. Equivalent Availability—Level 3 "Full Energy Measurement"*

The IEEE and NERC standards strive for a good measure of energy availability but have not fully addressed the significant (and nonfailure) factors influencing gas turbine output power levels such as:

- *Ambient Climatic Conditions:* Temperature, barometric pressure, and humidity can cause gas turbine output capability to vary by 10% or more in a 24-h period without any equipment failures or faults chargeable to unreliability. And seasonal variations can be worth as much as 30% change in output power capability.
- *Compressor and Turbine Cleanliness Levels:* The state of cleanliness of the gas turbine's compressor and turbine sections can impact output capability by up 10% in extreme cases. This is a site environment/maintenance issue; it is not a reliability issue, but should it be counted as equivalent unavailability?
- *Compressor and Turbine Degradation:* Aging and wear cause clearances to increase and flow path surfaces to roughen, ultimately decreasing output capability by 5% or more in a normally unrecoverable manner. This is not usually categorized as equipment failure but some would have it be counted as equivalent unavailability.

So, the measure of equivalent availability, on a full energy production capability measurement basis, is not just one of reliability or equipment failure, but also how to deal with the other major performance factors. An equivalent availability guarantee especially needs a very clear and explicit set of warranty terms and conditions. Despite the complexity, the full energy measurement basis of EAF is exactly what some independent power producers and nonutility generators are seeking in order to insure the profitability of their ventures.

One technical solution suggested by the author is to utilize a small computer model to first calculate the theoretical "new-and clean" performance on an average hourly basis from the manufacturer's plant performance algorithms. Then, *actual hourly output capability* would be calculated by subtracting a cleanliness (fouling) correction, a degradation correction and an equipment failure correction (derating). Negotiation would determine which corrections would be included in the

Copyright © 1998 IEEE. All rights reserved.

TABLE I

| Number of Start Attempts | 85% Confidence Levels on 95% inherent SR to Favor or Protect Seller | Buyer |
|---|---|---|
| 20 | 90 | Not Possible |
| 50 | 92 | 98 |
| 100 | 93 | 97 |
| 400 | 93.75 | 96.0 |
| 1000 | 94.3 | 95.7 |

EAF measurement. The value of each of the corrections is determined by regularly pressing the generating machinery to maximum operating level and recording the actual output power. Since most of these measurements would not have equipment failure deratings in effect, it is possible to determine the average deterioration of performance due to long term degradation, the rate of deterioration due to fouling, and the amount of recovery associated with cleaning. The derating due to equipment failure can also be tested, or even measured on an hourly basis. Those corrections that had been agreed to be included in the EAF measurement would then be integrated to equivalent derated hours for use in the EAF equation (23).

Unfortunately, several known projects have been committed to EAF guaranties without preestablishing the measurement system, measurement formulas, or rules. When the equipment finally enters commercial operation, the dilemma of the measurement system becomes clear and the warranties have defaulted to compromise positions such as negotiated seasonal (monthly or quarterly) production quotas with associated bonus/penalty conditions. EAF has become the percent achievement of the quota and it has sometimes exceeded 100% (defying all traditional reliability theory). Even the variance of the weather has been passed back to the equipment manufacturer! When IEEE and NERC standards invoke the "Seasonal Derating" term for gas turbines, it effectively offers the same compromise position and the same problems for gas turbine power plants.

Thinking broadly about all equivalent availability guarantees, they can be applied for simple cycle gas turbines up through the most complex combined cycle plants, but the measurement system and warranty structure must be very carefully thought out and agreed upon between all parties to the contract. The simple time-based measures of availability and block method EAF are often more appropriate, and more easily measured and preferred for their simplicity. And like availability, the EAF is a good measure for high usage plants and a poor (undesirable) measure for low usage machines.

In recognition of the fact that there will be nonchargeable outage time, the warranty version of the equivalent availability formula is suggested as follows:

$$\text{EAF Under Warranty} = \frac{\text{AH} - \text{EDH}}{\text{PH} - \text{AOH}} \qquad (24)$$

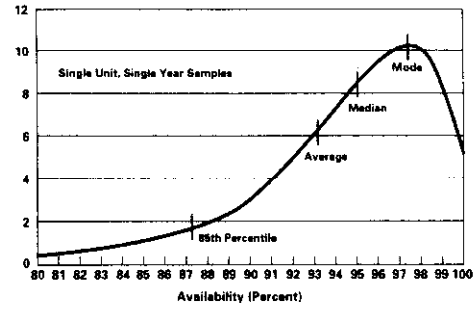


Fig. 8. Typical availability distribution. Percent samples per percent availability.

where Available Hours (AH) = PH – FOH – MOH – POH – AOH and Equivalent Derated Hours (EDH) = EUDH + EPDH + ESEDH and

PH Period Hours (one year – 8760 h),
FOH Forced Outage Hours,
MOH unplanned Maintenance Outage Hours,
POH Planned Outage Hours (scheduled well in advance),
AOH Administrative Outage Hours,
EUDH Equivalent Unplanned Derated Hours,
EPDH Equivalent Planned Derated Hours, and
ESEDH Equivalent Seasonal Derated Hours.

## IX. Measurement Uncertainty

When money or reputation are at stake, it is important that the measurement system be both accurate and representative. The accuracy of the data is accomplished through a "rigorous and explicit" logging system that identifies the nature of each operating event (and outage) together with the starting and stopping times to the nearest minute or tenth of an hour. Representativeness of the data is a little tougher to deal with because of the randomness of occurrence of failure events and the widely distributed spacing of planned maintenance events.

The term "representativeness" is used here to relate the actual measured value to the inherent long-term operating norm of the equipment. This was partially addressed under starting reliability with reference to the number of start attempts required in the measurement to be statistically representative of the real, inherent mean. Table I illustrates the 85% confidence band around 95% inherent starting reliability to protect seller and buyer.

A similar situation of randomness exists with Running Reliability and Availability measurements. The statistician will advise that at least 25 to 30 unplanned outage events are needed in the measurement set in order for the MTTR and MTBF to be considered representative of the inherent performance level of the equipment. Once again it is appropriate to average multiple units and even multiple years of operating data.

Fig. 8 shows the smoothed probability distribution function of a sample set of availability data for simple cycle gas turbine generating sets taken on a single unit, single year basis. It nicely shows the "mode" units which the sales personnel love



Copyright © 1998 IEEE. All rights reserved.

to tout: the fleet "average" (mean) data which is commonly shown as the collective performance statistic, and then a couple of distribution statistics. To the author, the "median" machine performance is a better indicator of expectations for single units than the "average" fleet performance, but the important number for warranty situations should be somewhere near the 85th percentile. At that point there is about 85% probability of successful achievement and only 15% probability of failure. By averaging multiple units and multiple years of data in the measurement, the gap between the 85th percentile and the "average" can be significantly closed. Bonus/penalty arrangements can also drive the guarantee point closer to the "average."

It should therefore be recognized by all parties that guarantee points will normally be more pessimistic than fleet average performance, median machine performance or the mode example machines.

## X. Warranty Terms

A contractual warranty requires not only a measurement formula, definition of factors, and a guarantee number, but a set of terms to qualify the environment. Here is a reasonably full house of terms to choose from:

*For all Reliability Warranties:*

1) The reliability warranty is fully separate and independent from the equipment warranty. The warranties may have separate starting times, ending times, and commercial remedies.
2) A rigorous and explicit operating log shall be maintained from which the performance under warranty is to be determined. The log shall clearly identify the time, the cause, the capacity reduction, the amount of waiting time and/or idle maintenance time associated with each and every outage event and be periodically reviewed and jointly certified with the warrantor's technical representative.
3) With the seller's assistance and concurrence, the equipment operator shall have a documented maintenance program which covers scheduled maintenance plans, a work schedule agreement, and well planned replacement parts support.
4) The equipment shall be operated and maintained in accordance with the suppliers' recommended procedures with particular attention to maintenance inspection intervals and preventative maintenance activities.
5) A two-week (minimum) reliability demonstration period including no less than 5 start-stop cycles, 50 fired hours and mutually acceptable results shall precede the warranty measurement period.
6) Outage hours or events not directly chargeable to failure of equipment furnished under the contract shall not be chargeable to the warranty.

*Additional Clauses for Starting Reliability Warranties:*

7) Test starts and failures to start from equipment not furnished by the seller shall not be counted as start attempts, failures, or successes.
8) As a general assurance of readiness: If a unit has not experienced a successful start during the prior thirty days, then the start attempt shall be considered as a nonwarranty-qualifying "test start" and shall not be counted.
9) Measurement blocks of at least 500 unit start attempts are desired to ensure that the measured SR is statistically representative of the inherent (true) SR. Where liquidated damages without bonus provisions are associated with the measurement of SR, and the measurement block has less than 500 start attempts, then a measurement tolerance band shall be inserted between the guarantee point and the point of damages assessment. The measurement tolerance shall consider the actual number of start attempts and relate the measured SR to guaranteed SR with 85% statistical confidence.

*Additional Clauses for Running Reliability, Availability and Equivalent Availability Warranties (as Applicable):*

10) For purposes of the warranty measurement: Inspections, maintenance, and repair shall be gauged on a high priority, high need basis. To achieve this, waiting time and inactive maintenance time in excess of four hours per outage event shall be charged to administrative outage hours and not charged against the warranty.
11) Equipment outages shall be considered on a "block" basis. Each individual major piece of equipment (gas turbine, generator, HRSG, or steam turbine) shall be treated as either available or unavailable at any point in time. Equivalent outage hours shall be accumulated for "block" outages but not for reductions in capacity of the individual major pieces of equipment.
12) Planned outage inspections shall be performed on a "replace then repair" basis with all needed replacement parts on hand at the start of the inspection. NDE inspections, repairs and cleaning up of removed components are to be done separately from the outage/inspection activities.
13) Planning for outage inspections shall address all major equipment on a concurrent maintenance basis to be consistent with the basis of formulation of the guarantee level. If concurrent maintenance cannot be practiced, then the nonconcurrent planned outage hours for nongas turbine equipment shall not be chargeable as either outage hours or period hours, but as administrative outage hours.
14) Whereas seasonal deratings (due to ambient conditions) do not constitute any form of equipment failure, the Equivalent Seasonal Derated Hours (ESEDH) shall be set to zero and not factored into the measurement.

## XI. Conclusion

In the author's experience of writing and negotiating reliability warranties, there was much new ground to break. There are also several major steps in the process of reaching an equitable warranty structure:

*Step 1:* Recognize the value of reliability to the point that it must be insured during the contracting process.

*Step 2:* Realize the fact that there are no commonly accepted standards and definitions that can be directly and solely used to establish the warranty measurement.

Copyright © 1998 IEEE. All rights reserved.

The current "standards," including IEEE Std 762, NERC GADS, ORAP, and the German VDEW, take a total plant operation approach. There are no provisions for dealing with nonchargeable outages or for separating nominal equipment restoration aspects from service system aspects.

Different site applications require different treatment. Single unit peakers operating 200 fired hours per year should be under warranty by different measurements than base-loaded, multi-unit, combined cycle plants.

*Step 3:* Reconcile the "real-life" warranty consideration factors and determination of the appropriate measurement for the specific application.

Part of this process is to "rough in" the qualifications concerning which outage events or hours shall be chargeable to the warranty, or fully excluded from the warranty or handled on a "stop-the-clock" basis. To aid this process, Appendix E contains a Worksheet for Allocation of Outage Hours.

*Step 4:* Capture the ideas of step 3 in suitable contract language.

*Step 5:* Implement the measuring system with log sheet forms (hopefully computerized) to semi-automatically track each machine covered by the warranty. The degree of detail or categorization afforded by the log shall support multiple reporting needs including the qualified warranty performance, NERC GADS reporting data, traditional performance measures (e.g., ORAP) and engineering-desired events data.

As reliability gets more widely and properly measured, so will its value become more appreciated and sought after on a tangible basis.

## APPENDIX A
## Starting Reliability Guarantee
[Project/Contract Title]

[Date]

*A. Starting Reliability Statement*

The average Starting Reliability of the [Model/Type] gas turbine-generator units furnished under this contract is guaranteed to be not less than [96.7%] over the warranty measurement period as measured in accordance with the definitions and concepts of ANSI/IEEE Std.762-1987. The warranty measurement period for each machine shall commence on the date of first commercial operation and expire [three years] from that date.

*B. Starting Reliability Warranty Context*

1. The ANSI/IEEE Std.762-1987 provides definitions and a formula for Starting Reliability that allow for the fact that not all failures-to-start or incomplete start attempts are chargeable to equipment failure or to the warranty. Starting Reliability is to be measured by the IEEE formula as follows:

$$\textbf{Starting Reliability} = \frac{SS}{SS + SF}$$

Where:

SS = Chargeable Starting Successes
SF = Chargeable Starting Failures

And:

A Qualifying Starting Attempt is the action intended to bring a unit from shutdown to the in-service state under conditions that qualify for inclusion in the warranty. Repeated initiations of the starting sequence within the allowable specified starting time period or without accomplishing corrective repairs are counted as a single attempt.

A Chargeable Starting Success (SS) is the occurrence of bringing a unit through a qualifying starting attempt to the in-service state within a specified period, as evidenced by maintained closure of the generator breaker to the system.

A Chargeable Starting Failure (SF) is the inability to bring a unit through a qualifying starting attempt to the in-service state within a specified period for failure reasons chargeable to the warranty. Repeated failures within the specified starting period are to be counted as a single starting failure.

2. On an annual basis or at each accumulation of 500 qualifying start attempts (whichever is greater), the Starting Reliability shall be calculated collectively as a single average measurement of all of the contract units that are within the warranty measurement period. If the calculated average Starting Reliability falls below the guarantee level, it shall be remedied in accordance with the terms set forth [in the Commercial section].

If the measurement must be made with an accumulation of less than 500 start attempts, the statistical measurement uncertainty shall be recognized by providing an allowance from the guarantee level. The Measurement Uncertainty Allowance shall adjust the point of damages initiation based on the cumulative binomial probability function and the actual number of start attempts to assure with 75% confidence that the indicated (measured) shortfall is due to equipment deficiency rather than the random nature of failure occurrences.

3. A rigorous and explicit operating log shall be maintained from which the starting reliability measurement is to be determined. The log shall be periodically reviewed and jointly certified with a [Supplier] technical representative.

4. Test Starts and failures to start from equipment not furnished under this contract by [Supplier] shall not be counted as start attempts, failures or successes.

5. As a general assurance of readiness; if a unit has not experienced a successful start during the prior thirty (30) days, then the start attempt shall be considered as a non-warranty "test start" and shall not be counted.

6. Procedural errors that do not constitute equipment failure involving repair shall not be counted as failures-to-start.

7. The units shall be operated within the design conditions specified in the contract and maintained in accordance with [Supplier] recommended procedures with particular attention to maintenance inspection intervals and preventative maintenance activities.


Copyright © 1998 IEEE. All rights reserved.

## APPENDIX B
## Running Reliability Guarantee
[Project/Contract Title]
[Date]

*A. Running Reliability Statement*

Running Reliability shall be guaranteed in terms of the ratio of actual available hours to planned available hours. The Running Reliability for the gas turbine-generator units furnished under this contract is guaranteed to average not less than [97.2%] over the warranty measurement period. The measurement period shall commence on successful completion of the two-week reliability readiness test. It shall expire [two years] after the date of first commercial operation.

*B. Running Reliability Warranty Context*

1. In recognition of the fact that there will be non-chargeable outage time, the warranty version of the running reliability formula shall be as follows:

$$\text{Running Reliability} = \frac{AH}{PH - POH - AOH}$$

where: Available Hours (AH) also equals
PH-FOH-MOH-POH-AOH

and: PH = Period Hours
(usually one year - 8760 hours)
FOH = Forced Outage Hours
MOH = (unplanned) Maintenance Outage Hours
POH = Planned Outage Hours
(scheduled well in advance)
AOH = Administrative Outage Hours
(non-chargeable)

and: The above terms (except AOH) are more fully conceptualized and defined by ANSI/IEEE Std 762-1987

2. A rigorous and explicit operating log shall be maintained from which the Running Reliability measurement is to be determined. The log shall clearly identify the cause and the amount of waiting time and/or idle maintenance time associated with each and every outage event and be periodically reviewed and jointly certified with a [Supplier] technical representative.

3. With [Supplier] assistance and concurrence, the equipment operator shall have a documented maintenance program which covers scheduled maintenance plans, a work schedule agreement and well-planned replacement parts support.

4. The unit shall be operated and maintained in accordance with [Supplier] recommended procedures with particular attention to maintenance inspection intervals and preventative maintenance activities.

5. A two-week (minimum) reliability demonstration period including no less than 5 start-stop cycles, 50 fired hours and mutually acceptable results shall precede the Running Reliability warranty measurement period.

6. For purposes of the warranty measurement; inspections, maintenance and repair shall be gauged on a high priority, high need basis. To achieve this, waiting time and inactive maintenance time in excess of four hours per outage event shall be considered as Administrative Outage Hours (AOH). As such, they shall have "stop-the-clock" treatment and effectively not be counted as outage hours, derated hours or included in the period hours base.

7. Outage hours associated with the [Supplier] furnished equipment but not directly chargeable to equipment failure shall be considered as Administrative Outage Hours (AOH).

8. Operator shall operate the gas turbine unit within the design conditions specified in the contract.

Copyright © 1998 IEEE. All rights reserved.

APPENDIX C
Availability Guarantee
[Project/Contract Title]
[Date]

*A. Availability Statement*

Availability shall be guaranteed in terms of the Availability Factor as described in the definitions and concepts of ANSI/IEEE Std 762-1987. The average Availability Factor for the [#/model] gas turbines generator sets furnished under this contract is guaranteed to average not less than [95]% over the warranty measurement period. The measurement period shall commence on successful completion of the two-week reliability readiness test. It shall expire [three] years after the date of first commercial operation.

*B. Availability Warranty Context*

1. In recognition of the fact that there will be non-chargeable outage time, the warranty version of the availability formula shall be as follows:

$$\textbf{Warranted Availability Factor} = \frac{AH}{PH - AOH}$$

where: Available Hours (AH) also equals
PH-FOH-MOH-POH-AOH

and: PH = Period Hours
(usually one year - 8760 hours)

FOH = Forced Outage Hours

MOH = (unplanned) Maintenance Outage Hours

POH = Planned Outage Hours
(scheduled well in advance)

AOH = Administrative Outage Hours
(non-chargeable)

2. A rigorous and explicit operating log shall be maintained from which the Availability measurement is to be determined. The log shall clearly identify the cause and the amount of waiting time and/or idle maintenance time associated with each and every outage event and be periodically reviewed and jointly certified with a [Supplier] technical representative.

3. On an annual basis the Availability Factor shall be calculated collectively as a single average measurement of all the contract units that are within the availability warranty measurement period. If the calculated average Availability Factor falls below the guarantee level, it shall be remedied in accordance with the terms set forth in the [Commercial] agreements.

4. With [Supplier] assistance and concurrence, the equipment operator shall have a documented maintenance program which covers scheduled maintenance plans, a work schedule agreement and well-planned replacement parts support.

5. The unit shall be operated and maintained in accordance with [Supplier] recommended procedures with particular attention to maintenance inspection intervals and preventative maintenance activities.

6. A two-week (minimum) reliability demonstration period including no less than 5 start-stop cycles, 50 fired hours and mutually acceptable results shall precede the availability warranty measurement period.

7. For purposes of the warranty measurement; inspections, maintenance and repair shall be gauged on a high priority, high need basis. To achieve this, waiting time and inactive maintenance time in excess of four hours per outage event shall be considered as Administrative Outage Hours (AOH). As such, they shall have "stop-the-clock" treatment and effectively not be counted as outage hours, derated hours or included in the period hours base.

8. Outage hours associated with the [Supplier] furnished equipment but not directly chargeable to equipment failure shall be considered as Administrative Outage Hours (AOH).

9. Planned outage inspections shall be performed on a "replace then repair" basis with all needed replacement parts on hand at the start of the inspection. NDE inspections, repairs and cleaning up of removed components is to be done separately from the outage/ inspection activities.

10. Operator shall operate the gas turbine unit within the design conditions specified in the contract.



Copyright © 1998 IEEE. All rights reserved.

## APPENDIX D
## Equivalent Availability Guarantee
## (Proportional Block Derating Method)
## [Project/Contract Title]
## [Date]

*A. Availability Statement*

Availability shall be guaranteed in terms of the Equivalent Availability Factor as generally described in the definitions and concepts for the ANSI/IEEE Std 762-1987. The average Equivalent Availability Factor for the contract-furnished gas turbines, generators and supporting controls and accessories is guaranteed to average not less than [90%] over the warranty measurement period. The measurement period for each generating set shall commence on successful completion of the two-week reliability readiness test. It shall expire two years after the date of first commercial operation.

*B. Availability Warranty Context*

1. In order to reflect capacity reductions due to equipment failures and deal with non-chargeable outage time, the warranty version of the equivalent availability formula shall be as follows:

$$\textbf{Warranted Equivalent Availability Factor} = \frac{AH - EDH}{PH - AOH}$$

where: Available Hours (AH) also equals
PH - FOH - MOH - POH - AOH by the conventional, time-based, IEEE 762 definition

Equivalent Derated Hours (EDH) equals EUDH + EPDH calculated for periods of derating due to specific equipment failure and excluding seasonal derating and nominal degradation of performance

and:
- PH = Period Hours (usually one year-8760 hours)
- FOH = Forced Outage Hours
- MOH = (unplanned) Maintenance Outage Hours
- POH = Planned Outage Hours (scheduled well in advance)
- AOH = Administrative Outage Hours (non-chargeable)
- EUDH = Equivalent Unplanned Derated Hours
- EPDH = Equivalent Planned Derated Hours

2. A rigorous and explicit operating log shall be maintained from which the Equivalent Availability measurement is to be determined. The log shall clearly identify the cause and the amount of waiting time and/or idle maintenance time associated with each and every outage event plus all data required to calculate EDH including minimum and maximum ambient temperatures and the effective reduction in dispatchable dependable capacity. The log will be periodically reviewed and jointly certified with a [supplier] technical representative

3. The Equivalent Derated Hours (EDH) shall be calculated on a daily basis as follows:

a. For days wherein generating capacity is not limited by specific failure of contract-furnished equipment, the EDH shall be taken as zero (0).

b. For days that generating capacity is partially derated due to specific failure of the contract-furnished equipment, the EDH shall be calculated as the ratio of the capacity shortfall to the daily dependable capacity multiplied by the number of hours the derating was in effect. General degradation shall not be considered as specific failure.

For example; for each day with some capacity derating, the minimum and maximum ambient temperatures for the operating period are noted, recorded and averaged to determine the median daily operating temperature. Utilizing performance curves from the manufacturer, a "new and clean" plant capacity level is determined for that median temperature. Then that capacity is reduced by a nominal predicted degradation amount to arrive at the median daily dependable capacity. Now, because of the impact of the specific component failure, a maximum dispatchable capacity level will exist which must be rationally determined. (If the plant is fully dispatched for the full day, then the full day's generation in kWh divided by 24 hours is the maximum dispatchable capacity.) The difference between the median daily dependable capacity and the maximum dispatchable capacity is the shortfall.

The ratio of the shortfall to the median daily dependable capacity is the degree of derating. Then multiplying the degree of derating by the number of hours that the derating was in effect that day, yields the Equivalent Derated Hours.

4. With [Supplier's] assistance and concurrence, the equipment operator shall have a documented maintenance program which covers scheduled maintenance plans, a work schedule agreement and well-planned replacement parts support.

5. The unit shall be operated and maintained in accordance with [Supplier] recommended procedures with particular attention to maintenance inspection intervals and preventative maintenance activities.

6. A two-week (minimum) reliability demonstration period including no less than 5 start-stop cycles, 50 fired hours and mutually acceptable results shall precede the Equivalent Availability warranty measurement period.

7. For purposes of the warranty measurement; inspections, maintenance and repair shall be gauged on a high priority, high need basis. To achieve this, waiting time and inactive maintenance time in excess of four hours per outage event shall be considered as Administrative Outage Hours (AOH). As such, they shall have "stop-the-clock" treatment and effectively not be counted as outage hours, derated hours or included in the period hours base.

8. Outage hours associated with the [Supplier] - furnished equipment but not directly chargeable to equipment failure shall be considered as Administrative Outage Hours (AOH).

9. Planned outage inspections shall be performed on a "replace then repair" basis with all needed replacement parts on hand at the start of the inspection. NDE inspections, repairs and cleaning up of removed components is to be done separately from the outage/ inspection activities.

10. Operator shall operate the gas turbine unit within the design conditions specified in the contract.

Copyright © 1998 IEEE. All rights reserved.

APPENDIX E
Worksheet for Allocation of Outage Hours

A = warranty chargeable hours
B = non-chargeable "stop-the-clock" hours
C = non-chargeable fully-excluded hours

| | A | B | C |
|---|---|---|---|
| ***Classifications by Event Cause*** | | | |
| Clearly covered equipment | | | |
| Forced outage | (X) | | |
| Maintenance (delayed) outage | ( ) | ( ) | ( ) |
| Planned Outage | ( ) | ( ) | ( ) |
| Unplanned Extension of planned outage | ( ) | ( ) | ( ) |
| Non-covered equipment outages | | | (X) |
| Buyer-stipulated outage time | | | |
| Equipment modifications | | ( ) | ( ) |
| Special tests or inspections | | ( ) | ( ) |
| Force Majeuere events | | | |
| Flood - hurricane | | (X) | |
| Externally caused fire | | (X) | |
| Labor problems, strike | | | (X) |
| System problems | | | |
| Excessive frequency swings | | | (X) |
| Lack of proper (in spec.) fuel | | | (X) |
| Inadequate cooling water supply | ( ) | ( ) | ( ) |
| Site specific contract exclusion events | | | |
| Cement dust fouling of inlet | | ( ) | ( ) |
| Planned outages for residual fuel | | ( ) | ( ) |
| ***Service Interruption Outage Hours*** | | | |
| Waiting time or idle maintenance time in excess of (4) hours per outage event considering: | ( ) | ( ) | ( ) |
| Delays for replacement parts | | | |
| Buyer stocking responsibility | ( ) | ( ) | ( ) |
| Supplier stocking responsibility | ( ) | ( ) | () |
| Carrier (transportation) mishap | ( ) | ( ) | ( ) |
| Delayed in Customs | ( ) | ( ) | ( ) |
| Delays of technical advisory service | | | |
| Notification delay | ( ) | ( ) | ( ) |
| Delayed arrival | ( ) | ( ) | ( ) |
| Unapplied crafts or labor time | | | |
| 2nd shift not working | ( ) | ( ) | ( ) |
| 3rd shift not working | ( ) | ( ) | ( ) |
| Weekend day or holiday | ( ) | ( ) | ( ) |
| Higher priority elsewhere | ( ) | ( ) | ( ) |
| Work stretch-out labor problem | ( ) | ( ) | ( ) |
| Necessary tools/equipment not available | | | |
| Traveling cranes or lifting gear | ( ) | ( ) | ( ) |
| Special welding equipment | ( ) | ( ) | ( ) |
| Oil conditioning equipment | ( ) | ( ) | ( ) |
| ***Other Considerations*** | | | |
| _____ | ( ) | ( ) | ( ) |
| _____ | ( ) | ( ) | ( ) |
| _____ | ( ) | ( ) | ( ) |
| _____ | ( ) | ( ) | ( ) |
| _____ | ( ) | ( ) | ( ) |


Copyright © 1998 IEEE. All rights reserved.

## REFERENCES

[1] IEEE Standard Definitions for Use in Reporting Electric Generating Unit Reliability, Availability, and Productivity, ANSI/IEEE Standard 762, 1987.

[2] S. R. Calabro, *Reliability Principles and Practices*. New York: McGraw-Hill, 1962.

[3] P. F. Albrecht, W. D. March, and F. H. Kindle, "Gas turbines require different outage criteria," *Electrical World Mag.*, April 27, 1970.

[4] A. K. Jenkins and J. J. Lofe, "Availability predictions for combustion turbines in peaking applications," ASME paper 89-JPGC/Pwr-4, Oct. 1989.

[5] "Gas turbine operating and maintenance instructions," GE publication GER-3620.

[6] S. Anchukaitus, S. Della Villa, and H. Wilson, "Combined cycle power plant—A reliability measurement approach and evaluation system," presented at the 1982 Eng. Conf. Reliability for the Electric Power Ind. (Inter-ram).



**Thomas E. Ekstrom** received the B.S.M.E. from Northeastern University, Boston, MA.

He has worked for over 30 years in GE's Industrial and Power Systems businesses, Schenectady, NY, as an installation engineer, applications engineer, quality systems engineer, quality manager and engineering programs manager. He is currently a Senior Gas Turbine Application Engineer, in which his work includes the reliability analysis of all GE gas turbine power plant systems that involve reliability estimates or guarantees. He evaluates and structures about 60 reliability guarantees per year. He holds two patent awards and is an author of more than 20 technical papers.

Mr. Ekstrom is a member of ASQC and a recipient of numerous GE Engineering and Management awards. He is a Registered Professional Engineer in the state of New York.

Copyright © 1998 IEEE. All rights reserved.

This page is intentionally blank

## Appendix N

## Transmission Line and Equipment Outage Data

### Part 1

### IEEE Survey of Line Outages 230 kV and Above

By
R.B. Adler, S.L. Daniel, C.R. Heising,
M.G. Lauby, R.P. Ludorf, T.S. White

*IEEE PES Transactions on Power Delivery, Vol. 9,*
*No. 1, Jan. 1994, pp. 21-39.*

### Part 2

### Frequency of Transmission Line Outages in Canada

By
D.O. Koval

Conference Record of the 1994 Industry Application's Conference,
Twenty Ninth Annual Meeting, Oct. 2-3, 1994, Denver, Colorado,
Volume III, pp. 2201-2208.

### Part 3

### Transmission Equipment Reliability Data from Canadian Electrical Association

By
D.O. Koval

IEEE Transactions on Industry Applications
VOL. 32, NO. 6, November/December, 1996, pp. 1-9.

Copyright © 1998 IEEE. All rights reserved.

This page is intentionally blank

# AN IEEE SURVEY OF U.S. AND CANADIAN OVERHEAD TRANSMISSION OUTAGES AT 230 KV AND ABOVE

Data Analysis Task Force, Working Group on Statistics of Line Outages,
General Systems Subcommittee, Transmission & Distribution Committee

R. B. Adler (Chairman), S. L. Daniel, Jr., C. R. Heising,
M. G. Lauby, R. P. Ludorf, T. S. White

Abstract - The Working Group on Statistics of Line Outages was formed in 1981 to develop, implement and summarize the results of a survey of design characteristics of and outage experience with overhead transmission at voltages 230kV and above. The survey, distributed in July, 1985, requested the voluntary submission of specific data on overhead lines in service within the period, 1965-1985. The purposes of the effort were twofold: to update earlier surveys (1949 and 1965), and to address a growing need for line outage data to support evolving probabilistic system models for planning and operation. Data were submitted by utilities from all nine NERC/USA reliability regions and by the Canadian Electric Association representing all of Canada. The outage data were pooled and analyzed to produce average statistics which are summarized in this paper.

Keywords - Overhead Transmission, Outage Statistics, Performance Data, Reliability Analysis.

## INTRODUCTION

Since the early 1970's, there has been a growing need for transmission line outage rates and restoration times to support probabilistic models for system planning and operation. Prompted by an EPRI study of transmission outage data requirements [1], the Working Group on Statistics of Line Outages was created in 1981 to develop and implement a survey to update two earlier surveys of overhead transmission in which the IEEE took a leading role [2,3]. Reference [4] provides a description of the background and development of the new survey and of the method for its distribution to potential respondents. Work on a Transmission Outage Data Submission Guide to support the survey progressed in parallel with work on standard definitions for reporting outages of transmission facilities [5]. To the degree possible, the standard definitions were employed in the guide.

Similar to its precedents, the new survey, distributed in 1985, was intended to serve two broad objectives: to provide a snapshot of the design characteristics of overhead transmission facilities operating at 230kV and higher, and to quantify the performance of the various classes of lines on which data were submitted. The background and results in meeting the first objective are reported in [6]. The present paper reports on the second objective.

93 WM 054-7 PWRD A paper recommended and approved by the IEEE Transmission and Distribution Committee of the IEEE Power Engineering Society for presentation at the IEEE/PES 1993 Winter Meeting, Columbus, OH, January 31 - February 5, 1993. Manuscript submitted September 16, 1992; made available for printing November 3, 1992.

Specific goals adopted for the 1985 survey of overhead transmission outage events were:

1. To develop generic estimates of failure rates and restoration times for overhead lines, as functions of operating voltage, circuit length, and number of terminals; and to gain a better grasp of the nature and distribution of outage causes as a function of voltage.

2. To develop statistics on rare events such as three-phase faults at 500kV and 765kV.

3. To develop a better understanding of the nature and cause of related multiple outage events.

4. To correlate circuit availability with circuit design characteristics.

5. To determine how, in general, performance may have changed since the last survey in 1965.

6. To encourage and foster the uniform and consistent collection of transmission line outage data.

The 1985 survey differed from the 1949 and 1965 surveys in that it requested data on (a) related multiple outage events, (b) outage event start and end times, (c) 500kV and 765kV overhead lines, and (d) planned outage events. Outage rates are given on three bases: per 100-miles of circuit, per terminal, and per circuit.

Since the information summarized in this paper represents a second set of 1985 survey results, the numbering of tables and figures continues where [6] left off. That is, the first table of this paper is designated Table 18 and the first figure is Figure 2.

## DATA REQUESTED

To use outage experience to estimate outage rates and repair times, two types of information are required: circuit exposure (population) data, and outage-event data. The desired exposure data (summarized in [6]) included basic data on each transmission circuit which could have contributed to the history of outage events. Required data on each circuit consisted of: circuit name (to which was appended the host utility identification number), operating voltage, length, number of terminals, and the specific time period over which the circuit, of a fixed design and configuration, was in service and subject to outage.

The request for outage data presumed that the responding utilities would translate data already collected into the format specified in the Transmission Outage Data Submission Guide (distributed with the request for data). In some cases this translation was performed on data that had already been assembled and pooled on a regional basis. In other cases, the data were assembled and submitted by individual utilities on coding forms.

© 1993 IEEE

Copyright © 1998 IEEE. All rights reserved.

Figure 2 illustrates the coding form used for the submission of outage event data. (An outage event may have involved a single circuit outage, or two or more related circuit outages.) This form provided a means for identifying the circuit(s) associated with the initiating cause (primary/independent or common-mode outage(s) ), and for identifying any other circuit outage(s) required to isolate or remedy the problem (secondary/dependent outage(s) ). Secondary outages were of two kinds: direct and indirect. If a secondary outage was a natural consequence of isolating the problem, it was considered a "direct" secondary. If the secondary outage was a result of a second failure, such as a stuck breaker or faulty protective relay, it was considered an "indirect" secondary.

Figure 3 shows the codes available to classify each circuit outage in an event according to: (a) the type of outage, (b) the relation of the particular circuit outage to the initiating cause, (c) whether the circuit was completely or only partially removed from service, (d) whether the initiating problem involved line equipment or terminal equipment, (e) the means by which the circuit was restored to service, (f) the type of fault, (g) the suspected cause of the outage, and (h) the effect of the outage event on the system or its components.

When the outage event involved more than one circuit in a common-mode fashion (because of common tower, common right-of-way, or common terminal), then a "common mode" designation was appropriate. If the initiating cause of an event had directly resulted in the common-mode outage of two or more circuits, then all of these circuits were considered primary outages. For example, if the fault had occurred on a bus, it may have been necessary to remove all circuits connected to that bus to isolate the fault. Each circuit would have been considered part of the same common-terminal, common-mode primary outage. Depending on network configuration, one or more secondary outages may also have been required to isolate the fault.

## SURVEY RESPONSE

Seventy-eight utilities volunteered data, representing all nine USA regions of the North American Reliability Council (NERC). The Canadian utilities

X-273 REV. 6-65

**TRANSMISSION CIRCUIT OUTAGE REPORTING FORM**

PREPARER | DATE | PAGE OF

**TRANSMISSION CIRCUIT OUTAGE DATA**

| T Y P | UTILITY I D | EVENT NO | SEQ NO | TRANSMISSION CIRCUIT IDENTIFICATION | SECT I D | START OF OUTAGE MO. DAY YR. HR MIN | END OF OUTAGE MO DAY YR HR MIN | OUTAGE CLASS | A U T O | FAULT TYPE | OUTAGE CAUSE | E F F |
|---|---|---|---|---|---|---|---|---|---|---|---|---|
| 1 | 2 | 4 | 11 | 15 | 32 | | 43 | 54 | | 62 | 65 | 70 |

Figure 2. Transmission Circuit Outage Reporting Form.

**Outage Classification (OUTAGE CLASS)**

**OUTAGE TYPE [Col 54]**

A - AUTOMATIC
F - FORCED MANUAL
S - PLANNED

**MULTIPLE OUTAGES [Col 55-56]**

1ⱷ - PRIMARY
DD - DIRECT SECONDARY
DI - INDIRECT SECONDARY
CB - COMMON TERMINAL
CR - COMMON ROW
CT - COMMON TOWER

**DEGREE OF OUTAGE [Col 57]**

C - COMPLETE
P - PARTIAL

**PROBLEM TYPE [Col 58]**

L - LINE RELATED
T - TERMINAL RELATED
U - UNKNOWN

**Nature of Restoration (REST) [Col 60]**

A - AUTOMATIC
M - MANUAL/SUPERVISORY
R - REPAIR/REPLACE
U - UNKNOWN

**Fault Type [Col 62-63]**

ⱷⱷ - NO FAULT OR NO OPEN PHASE
1G - SINGLE PHASE TO GRD
2P - PHASE TO PHASE
2G - DOUBLE PHASE TO GRD.
3P - THREE PHASE
3G - THREE PHASE TO GRD
OP - OPEN PHASE
UF - UNKNOWN

**Suspected Cause of Outage (OUTAGE CAUSE) [Col 65-68]**

**DEFECTIVE POWER EQUIPMENT**

1Lⱷⱷ - TRANSMISSION CIRCUIT EQUIP
1LC ⱷ - CONDUCTOR
1LT ⱷ - TOWER/STRUCTURE
1LS ⱷ - SHIELD WIRE
1LIⱷ - INSULATOR/ INSULATION SYS.
1LX ⱷ - CABLE

1Sⱷⱷ - TERMINAL/STATION EQUIP.
1SA ⱷ - SURGE ARRESTOR
1SBⱷ - CIRCUIT BREAKER
1SC ⱷ - SHUNT CAPACITOR BANK
1SPⱷ - PROTECTIVE SYSTEM
1ST ⱷ - BUS
1SSⱷ - DISCONNECT SWITCH
1TBⱷ - TRANSFORMER
1TR ⱷ - SHUNT REACTOR BANK

1Uⱷⱷ - UNKNOWN

**HUMAN ELEMENT**

2ⱷⱷ - HUMAN ELEMENT RELATED
2Aⱷ - IMPROPER RELAY SETTING
2Bⱷ - INCORRECT INSTALLATION
2Cⱷ - IMPROPER DESIGN/ APPLICATION
2Dⱷ - MAINTENANCE ACTIVITY
2Eⱷ - CONSTRUCTION ACTIVITY
2Fⱷ - VANDALISM OR SABOTAGE
2Gⱷ - IMPROPER OPERATION

**FOREIGN INTERFERENCE**

3ⱷⱷ - FOREIGN INTERFERENCE
3Aⱷ - ANIMAL
3Bⱷ - BIRD
3Cⱷ - CRANE
3Hⱷ - HUMAN
3Kⱷ - KITE OR OTHER OBJECT
3Pⱷ - AIRCRAFT
3Tⱷ - TREE
3Vⱷ - VEHICLE
3Zⱷ - ANOTHER LINE

**POWER SYSTEM CONDITION/ CONFIGURATION**

4ⱷⱷ - POWER SYS. COND./CONF
4Aⱷ - STABLE OVERLOAD OPERATION
4Bⱷ - STABLE OSCILLATION
4Cⱷ - OUT OF STEP
4Dⱷ - OVERVOLTAGE
4Eⱷ - LOSS OF GENERATOR
4Fⱷ - RELAY INCORRECT OPERATION
4Gⱷ - OVERLOAD TRIP
4Hⱷ - UNDERVOLTAGE
4Iⱷ - UNDERFREQUENCY
4Jⱷ - SWITCHING SURGE (VOLTAGE)
4Kⱷ - DYNAMIC OVERVOLTAGE
4Lⱷ - INSTABILITY

**OTHER**

7Mⱷ - MISCELLANEOUS OR OTHER
7Uⱷ - UNKNOWN

**ENVIRONMENTAL**

5ⱷⱷ - ENVIRONMENT
5Aⱷ - LIGHTNING
5Bⱷ - WEATHER
5BRN - RAIN
5BSN - SNOW
5BSL - SLEET
5Bⱷ - ICE
5BHL - HAIL
5BWH - HIGH WIND
5BHC - HURRICANE
5BTH - THUNDERSTORM
5BTN - TORNADO
5Cⱷ - CONTAMINATION
5CSM - SMOG
5CSⱷ - SALT
5CBD - BIRD DROPPINGS
5Cⱷ - INDUSTRIAL

5CAG - AGRICULTURE

5EMⱷ - EARTH MOVEMENT
5FRⱷ - FIRE
5FLⱷ - FLOOD
5Gⱷ - GALLOPING CONDUCTORS
5Hⱷ - AEOLIAN VIBRATION

**SCHEDULED OUTAGE**

6ⱷⱷ - UNSPECIFIED PLANNED OUTAGE
6Aⱷ - CONSTR., INSTALL., MODIFICATION
6Bⱷ - TRANSMISSION CIRCUIT MAINT.
6Cⱷ - TERMINAL EQUIP. MAINT.
6Dⱷ - TEST OR INSPECTION
6Eⱷ - FOREIGN UTILITY REQUEST
6Fⱷ - SYSTEM CONDITION
6Gⱷ - ROUTINE OPERATION

**Effects of Outage (EFF) [Col 70]**

A - CASCADING
B - LOSS OF GEN
C - LOSS OF TERM. BANK
D - LOSS OF LOAD
E - INSTABILITY
F - LOSS OF INTERCONNECTION
G - OVERLOAD
H - LINE DAMAGE
I - EQUIPMENT DAMAGE
J - CONTROLLED LOAD SHED.
K - BLACKOUT
L - LOSS OF OTHER CIRCUITS (< 230kv)
M - NO ADVERSE EFFECT

Note: Under "Suspected Cause of Outage," the symbol "ⱷ" represents a blank space.

Figure 3. Transmission Circuit Outage Reporting Codes.



Copyright © 1998 IEEE. All rights reserved.

were represented in an additional single submission by the Canadian Electrical Association. A total of 38 489 outage records were judged valid and accepted. These consisted of outage types: automatic, forced-manual, and planned, and included primary, secondary, and common-mode outage classes. These outages were derived from 14 120 circuit-years or 583 712 mile-years of circuit exposure. The data submitted were derived from circuits of voltage 230kV and higher in service during various periods within the 1965-1985 time frame. Table 1 (repeated from [6]) provides a snapshot on July 1 of each year of the circuit population contributing to the database. In those NERC regions where the submission was based on regionally pooled data, the number of circuits shown in Table 1 remains roughly constant from year to year over the period that data were submitted. In those regions where submissions were by individual utilities, the number of participating circuits displays a wider year-to-year variation.

Circuit outage event data were submitted with varying levels of care and detail. Some utilities reported single and multiple-line outages as well as forced and scheduled outages, providing start and end times to the minute, carefully conforming to the recommended format, and using the codes defined in the Transmission Outage Data Submission Manual. Other utilities were less careful, and perhaps reported all circuit outages as independent events without identifying related outages. Some gave outage start and end dates, but omitted the time of day (hour and minute). In some cases, important data fields were left blank. The instructions for coding outages were at times misinterpreted.

Some utilities simply submitted their data in their own specific format, leaving the Working Group with the option to convert the data to the desired format. In the latter case, difficulties were often encountered due to a lack of information to guide the required conversion.

Only those outages records which satisfied the minimum data requirements were included in the database. An acceptable outage record was one that provided the minimum required data on an outage event, and documented an event which occurred within the in-service period established by a corresponding valid circuit exposure record.

## RESULTS

In the letter requesting circuit outage event data, utilities were assured that all data that were submitted would be pooled and the results presented in summary form only. In an effort to publish survey results without further delay, only basic data analysis has been performed. More detailed analysis, such as the correlation of circuit design characteristics and circuit availability, may yet be performed, depending on the level of interest revealed in the discussion of this paper.

### Data Summaries

Table 18 summarizes the nature of the primary forced outages. A primary outage is the circuit that experiences the initiating event. Although two or more circuits involved in a common-mode outage event may also experience an initiating event, the decision was made to exclude these multiple related outage events in Table 18. As the title of Table 18 implies, secondary circuit outages are also not included. Table 18 classifies 15 525 primary forced outages by cause, voltage, problem type (line-related, terminal-related or unknown), and general duration ("momentary" for restoration times less than or equal to one minute, and "sustained" for restoration times equal to or greater than two minutes). The causes of the primary outages are classified into the same categories used in the Outage Reporting Form (see Figure 3). If the problem type was not specified, and it could not be deduced from information on the outage cause (refer to section entitled Data Enhancement), it was classified as "Unknown."

Outage rates are expressed per 100-mile-year for line-related outages, per terminal-year for terminal-related outages, and per circuit-year for all outages combined (terminal-related, line-related, and unknown). In calculating terminal-years exposure, if the number of terminals of any circuit was not specified, it was assumed to have two.

The exposure to outage is summarized at the bottom of Table 18. This represents the mile-years (in hundreds), terminal-years, or circuit-years that were exposed to failure. The total number of line-related primary outages for each voltage is normalized by line

Table 1. Reported Line Population ( Number of Circuits) *.

| | BY REGION | | | | | | | | | | BY VOLTAGE LEVEL | | | |
|---|---|---|---|---|---|---|---|---|---|---|---|---|---|---|
| | CEA | NPCC | MAPP | SPP | SERC | MAAC | MAIN | ECAR | ERCOT | WSCC | 230 | 345 | 500 | 765 |
| 1965 | 0 | 0 | 0 | 6 | 12 | 0 | 0 | 0 | 0 | 0 | 18 | 0 | 0 | 0 |
| 1966 | 0 | 0 | 0 | 6 | 14 | 0 | 0 | 0 | 0 | 1 | 21 | 0 | 0 | 0 |
| 1967 | 0 | 0 | 0 | 6 | 17 | 0 | 0 | 0 | 0 | 1 | 24 | 0 | 0 | 0 |
| 1968 | 0 | 0 | 0 | 10 | 21 | 0 | 0 | 0 | 0 | 1 | 28 | 4 | 0 | 0 |
| 1969 | 0 | 0 | 0 | 10 | 22 | 0 | 0 | 0 | 0 | 2 | 29 | 5 | 0 | 0 |
| 1970 | 0 | 0 | 0 | 11 | 26 | 0 | 0 | 0 | 0 | 2 | 34 | 5 | 0 | 0 |
| 1971 | 0 | 0 | 1 | 19 | 28 | 0 | 0 | 0 | 0 | 2 | 43 | 7 | 0 | 0 |
| 1972 | 0 | 0 | 1 | 25 | 34 | 0 | 0 | 0 | 0 | 21 | 55 | 7 | 19 | 0 |
| 1973 | 0 | 0 | 1 | 30 | 38 | 0 | 0 | 0 | 0 | 21 | 62 | 9 | 19 | 0 |
| 1974 | 0 | 0 | 1 | 37 | 41 | 0 | 0 | 0 | 1 | 28 | 69 | 14 | 25 | 0 |
| 1975 | 0 | 0 | 2 | 38 | 46 | 0 | 94 | 103 | 3 | 28 | 91 | 197 | 25 | 1 |
| 1976 | 0 | 22 | 2 | 42 | 54 | 0 | 104 | 238 | 11 | 28 | 108 | 334 | 44 | 15 |
| 1977 | 0 | 22 | 111 | 49 | 58 | 0 | 113 | 254 | 15 | 29 | 163 | 422 | 45 | 21 |
| 1978 | 0 | 22 | 120 | 55 | 64 | 0 | 115 | 263 | 19 | 32 | 178 | 446 | 45 | 21 |
| 1979 | 0 | 24 | 134 | 64 | 99 | 376 | 124 | 269 | 20 | 30 | 566 | 479 | 74 | 21 |
| 1980 | 502 | 24 | 149 | 66 | 215 | 381 | 123 | 283 | 28 | 31 | 1021 | 595 | 125 | 61 |
| 1981 | 511 | 49 | 161 | 69 | 217 | 389 | 125 | 290 | 38 | 33 | 1045 | 640 | 130 | 67 |
| 1982 | 526 | 49 | 174 | 71 | 218 | 393 | 132 | 302 | 42 | 34 | 1062 | 664 | 143 | 72 |
| 1983 | 550 | 23 | 177 | 75 | 262 | 393 | 123 | 315 | 46 | 36 | 1071 | 660 | 184 | 85 |
| 1984 | 532 | 23 | 0 | 77 | 266 | 397 | 93 | 323 | 49 | 36 | 932 | 567 | 204 | 93 |
| 1985 | 0 | 23 | 0 | 63 | 268 | 402 | 0 | 0 | 46 | 37 | 603 | 104 | 130 | 2 |

* As of July 1 for the years shown. (Table 1 is repeated from [6].)

Copyright © 1998 IEEE. All rights reserved.

Table 18. Primary Automatic and Forced Manual Outages (1) by Cause, Voltage, Problem Type, and Duration Class (2), and Estimated Forced Outage Rates.

| CAUSE | 230 KV | | | | | | 345 KV | | | | | | 500 KV | | | | | | 765 KV | | | | | |
|---|---|---|---|---|---|---|---|---|---|---|---|---|---|---|---|---|---|---|---|---|---|---|---|---|
| | LINE | | TERMINAL | | UNKNOWN | | LINE | | TERMINAL | | UNKNOWN | | LINE | | TERMINAL | | UNKNOWN | | LINE | | TERMINAL | | UNKNOWN | |
| | MOM. | SUST. | MOM. | SUST. | MOM. | SUST. | MOM. | SUST. | MOM. | SUST. | MOM. | SUST. | MOM. | SUST. | MOM. | SUST. | MOM. | SUST. | MOM. | SUST. | MOM. | SUST. | MOM. | SUST. |
| **DEFECTIVE POWER EQUIPMENT** | | | | | | | | | | | | | | | | | | | | | | | | |
| TRANSMISSION CIRCUIT EQUIP | 6 | 55 | 0 | 1 | 0 | 0 | 12 | 70 | 0 | 0 | 0 | 0 | 6 | 6 | 0 | 0 | 0 | 0 | 0 | 4 | 0 | 0 | 0 | 0 |
| CONDUCTOR | 2 | 59 | 0 | 1 | 0 | 1 | 0 | 6 | 0 | 0 | 0 | 0 | 0 | 4 | 0 | 0 | 0 | 0 | 0 | 6 | 0 | 0 | 0 | 0 |
| TOWER/STRUCTURE | 2 | 37 | 0 | 1 | 0 | 3 | 2 | 11 | 0 | 0 | 0 | 0 | 0 | 3 | 0 | 0 | 0 | 0 | 0 | 5 | 0 | 0 | 0 | 0 |
| SHIELD WIRE | 7 | 100 | 0 | 0 | 0 | 0 | 7 | 21 | 0 | 1 | 0 | 0 | 1 | 1 | 0 | 0 | 0 | 0 | 4 | 15 | 0 | 0 | 0 | 0 |
| INSULATOR/INSULATION SYSTEM | 9 | 45 | 2 | 6 | 0 | 1 | 16 | 37 | 2 | 0 | 0 | 1 | 3 | 12 | 0 | 0 | 0 | 0 | 0 | 13 | 0 | 0 | 0 | 0 |
| CABLE | 0 | 0 | 0 | 1 | 0 | 0 | 0 | 1 | 0 | 0 | 0 | 0 | 0 | 0 | 0 | 0 | 0 | 0 | 0 | 0 | 0 | 0 | 0 | 0 |
| TERMINAL/STATION EQUIPMENT | 6 | 15 | 6 | 47 | 0 | 0 | 2 | 2 | 156 | 543 | 0 | 0 | 0 | 2 | 4 | 44 | 0 | 0 | 0 | 0 | 29 | 91 | 0 | 0 |
| SURGE ARRESTOR | 2 | 3 | 1 | 7 | 0 | 0 | 0 | 3 | 1 | 5 | 0 | 0 | 0 | 1 | 0 | 1 | 0 | 0 | 0 | 0 | 0 | 0 | 0 | 0 |
| CIRCUIT BREAKER | 0 | 3 | 7 | 59 | 0 | 0 | 2 | 4 | 1 | 11 | 0 | 1 | 0 | 0 | 0 | 28 | 0 | 0 | 0 | 0 | 0 | 0 | 0 | 0 |
| SHUNT CAPACITOR BANK | 0 | 0 | 0 | 0 | 0 | 0 | 0 | 0 | 0 | 0 | 0 | 0 | 1 | 1 | 0 | 1 | 0 | 0 | 0 | 0 | 0 | 0 | 0 | 0 |
| PROTECTIVE SYSTEM | 2 | 4 | 32 | 185 | 0 | 0 | 0 | 0 | 96 | 194 | 1 | 1 | 2 | 15 | 14 | 28 | 0 | 0 | 0 | 0 | 2 | 4 | 0 | 0 |
| BUS | 0 | 0 | 0 | 4 | 0 | 0 | 0 | 1 | 0 | 1 | 0 | 0 | 0 | 0 | 1 | 0 | 0 | 0 | 0 | 0 | 0 | 0 | 0 | 0 |
| DISCONNECT SWITCH | 0 | 0 | 1 | 10 | 0 | 0 | 0 | 0 | 0 | 4 | 0 | 0 | 1 | 1 | 0 | 5 | 0 | 0 | 0 | 0 | 0 | 0 | 0 | 0 |
| TRANSFORMER | 2 | 2 | 22 | 36 | 0 | 0 | 0 | 1 | 2 | 6 | 0 | 0 | 1 | 0 | 1 | 3 | 0 | 0 | 0 | 0 | 0 | 1 | 0 | 0 |
| SHUNT REACTOR BANK | 0 | 0 | 0 | 1 | 0 | 0 | 0 | 1 | 0 | 2 | 0 | 0 | 0 | 0 | 0 | 1 | 0 | 0 | 0 | 0 | 0 | 2 | 0 | 0 |
| UNKNOWN | 10 | 16 | 0 | 0 | 2 | 5 | 9 | 42 | 4 | 5 | 18 | 11 | 0 | 1 | 2 | 2 | 0 | 0 | 0 | 0 | 0 | 0 | 0 | 0 |
| SUB-TOTAL (DEFECTIVE POWER EQUIPMENT) | 50 | 339 | 73 | 359 | 2 | 10 | 50 | 200 | 262 | 772 | 19 | 14 | 15 | 47 | 22 | 113 | 0 | 0 | 4 | 45 | 31 | 98 | 0 | 0 |
| **HUMAN ELEMENT** | | | | | | | | | | | | | | | | | | | | | | | | |
| HUMAN ELEMENT RELATED | 75 | 184 | 31 | 56 | 0 | 0 | 0 | 46 | 118 | 228 | 0 | 0 | 16 | 24 | 4 | 14 | 0 | 0 | 5 | 43 | 14 | 17 | 0 | 0 |
| IMPROPER RELAY SETTING | 0 | 0 | 3 | 14 | 0 | 0 | 0 | 1 | 1 | 1 | 0 | 0 | 0 | 0 | 1 | 2 | 0 | 0 | 0 | 0 | 0 | 0 | 0 | 0 |
| INCORRECT INSTALLATION | 0 | 1 | 0 | 4 | 0 | 0 | 0 | 0 | 1 | 5 | 0 | 0 | 0 | 0 | 0 | 0 | 0 | 0 | 0 | 0 | 0 | 0 | 0 | 0 |
| IMPROPER DESIGN/APPLICATION | 0 | 0 | 0 | 2 | 0 | 0 | 0 | 0 | 0 | 0 | 0 | 0 | 0 | 2 | 0 | 0 | 0 | 0 | 0 | 0 | 0 | 0 | 0 | 0 |
| MAINTENANCE ACTIVITY | 1 | 14 | 1 | 3 | 0 | 1 | 3 | 5 | 12 | 18 | 0 | 2 | 0 | 0 | 2 | 7 | 0 | 0 | 0 | 0 | 0 | 0 | 0 | 0 |
| CONSTRUCTION ACTIVITY | 0 | 10 | 2 | 2 | 0 | 0 | 1 | 1 | 1 | 0 | 0 | 0 | 0 | 2 | 0 | 9 | 0 | 0 | 0 | 0 | 0 | 0 | 0 | 0 |
| VANDALISM OR SABOTAGE | 2 | 19 | 1 | 1 | 0 | 0 | 0 | 14 | 0 | 1 | 0 | 0 | 1 | 1 | 0 | 0 | 0 | 0 | 0 | 2 | 0 | 0 | 0 | 0 |
| *IMPROPER OPERATION* | 0 | 1 | 20 | 30 | 0 | 0 | 3 | 5 | 125 | 124 | 0 | 0 | 3 | 12 | 5 | 13 | 0 | 0 | 0 | 0 | 5 | 5 | 0 | 0 |
| SUB-TOTAL (HUMAN ERROR) | 78 | 229 | 58 | 112 | 0 | 1 | 7 | 72 | 258 | 377 | 0 | 2 | 20 | 41 | 12 | 45 | 0 | 0 | 5 | 45 | 19 | 22 | 0 | 0 |
| **FOREIGN INTERFERENCE** | | | | | | | | | | | | | | | | | | | | | | | | |
| FOREIGN INTERFERENCE | 16 | 99 | 0 | 0 | 0 | 0 | 0 | 6 | 0 | 0 | 0 | 0 | 0 | 7 | 0 | 1 | 0 | 0 | 0 | 3 | 0 | 0 | 0 | 0 |
| ANIMAL | 0 | 0 | 3 | 1 | 0 | 0 | 3 | 0 | 1 | 1 | 0 | 0 | 0 | 0 | 1 | 0 | 0 | 0 | 4 | 0 | 0 | 0 | 0 | 0 |
| BIRD | 1 | 1 | 0 | 0 | 0 | 0 | 0 | 1 | 0 | 0 | 0 | 0 | 1 | 0 | 0 | 0 | 0 | 0 | 0 | 0 | 0 | 0 | 0 | 0 |
| CRANE | 2 | 4 | 0 | 0 | 0 | 0 | 4 | 15 | 0 | 0 | 0 | 0 | 0 | 7 | 0 | 0 | 0 | 0 | 0 | 0 | 0 | 0 | 0 | 0 |
| HUMAN | 0 | 0 | 2 | 0 | 0 | 0 | 0 | 0 | 0 | 0 | 0 | 0 | 1 | 1 | 0 | 0 | 0 | 0 | 0 | 0 | 0 | 0 | 0 | 0 |
| KITE OR OTHER OBJECT | 3 | 6 | 0 | 1 | 0 | 0 | 1 | 1 | 0 | 0 | 0 | 0 | 1 | 5 | 0 | 0 | 0 | 0 | 0 | 0 | 0 | 0 | 0 | 0 |
| AIRCRAFT | 1 | 19 | 0 | 1 | 0 | 1 | 4 | 8 | 0 | 0 | 0 | 0 | 0 | 10 | 0 | 0 | 0 | 0 | 0 | 0 | 0 | 0 | 0 | 0 |
| TREE | 18 | 447 | 1 | 1 | 0 | 1 | 50 | 87 | 1 | 0 | 1 | 2 | 23 | 29 | 0 | 1 | 0 | 0 | 0 | 2 | 0 | 0 | 0 | 0 |
| VEHICLE | 3 | 31 | 0 | 0 | 0 | 0 | 3 | 3 | 0 | 1 | 0 | 0 | 0 | 1 | 0 | 1 | 0 | 0 | 0 | 0 | 0 | 0 | 0 | 0 |
| ANOTHER LINE | 0 | 1 | 1 | 5 | 0 | 0 | 0 | 24 | 0 | 2 | 2 | 1 | 0 | 0 | 1 | 0 | 0 | 0 | 0 | 0 | 0 | 0 | 0 | 0 |
| SUB-TOTAL (FOREIGN INTERFERENCE) | 44 | 608 | 7 | 9 | 0 | 2 | 65 | 145 | 2 | 4 | 3 | 3 | 26 | 60 | 2 | 3 | 0 | 0 | 4 | 5 | 0 | 0 | 0 | 0 |
| ***POWER SYSTEM CONDITION/CONFIGURATION*** | | | | | | | | | | | | | | | | | | | | | | | | |
| POWER SYSTEM, CONDITION/CONF. | 9 | 21 | 82 | 82 | 0 | 3 | 0 | 37 | 0 | 59 | 0 | 1 | 7 | 7 | 0 | 2 | 0 | 5 | 1 | 3 | 0 | 0 | 0 | 0 |
| STABLE OVERLOAD OPERATION | 0 | 0 | 0 | 2 | 0 | 0 | 0 | 1 | 0 | 0 | 0 | 0 | 0 | 0 | 0 | 0 | 0 | 0 | 0 | 0 | 0 | 0 | 0 | 0 |
| STABLE OSCILLATION | 0 | 0 | 0 | 0 | 0 | 0 | 0 | 0 | 0 | 0 | 0 | 0 | 0 | 0 | 0 | 0 | 0 | 0 | 0 | 0 | 0 | 0 | 0 | 0 |
| OUT OF STEP | 0 | 0 | 0 | 0 | 0 | 0 | 0 | 0 | 0 | 1 | 0 | 0 | 0 | 0 | 0 | 0 | 0 | 0 | 0 | 0 | 0 | 0 | 0 | 0 |
| OVERVOLTAGE | 0 | 1 | 0 | 20 | 0 | 0 | 0 | 7 | 0 | 4 | 0 | 0 | 0 | 0 | 0 | 0 | 0 | 0 | 0 | 0 | 0 | 0 | 0 | 0 |
| LOSS OF GENERATOR | 0 | 0 | 0 | 1 | 0 | 0 | 0 | 0 | 0 | 4 | 0 | 1 | 0 | 0 | 0 | 1 | 0 | 0 | 0 | 0 | 0 | 0 | 0 | 0 |
| RELAY INCORRECT OPERATION | 2 | 3 | 3 | 0 | 0 | 0 | 1 | 7 | 2 | 9 | 0 | 0 | 1 | 1 | 0 | 12 | 0 | 0 | 0 | 0 | 0 | 4 | 0 | 0 |
| OVERLOAD TRIP | 0 | 0 | 1 | 40 | 0 | 0 | 0 | 1 | 0 | 15 | 1 | 0 | 0 | 5 | 0 | 7 | 0 | 0 | 0 | 0 | 0 | 3 | 0 | 0 |
| UNDERVOLTAGE | 0 | 0 | 0 | 6 | 0 | 0 | 0 | 0 | 0 | 0 | 0 | 0 | 0 | 0 | 0 | 0 | 0 | 0 | 0 | 0 | 0 | 0 | 0 | 0 |
| UNDERFREQUENCY | 0 | 8 | 0 | 0 | 0 | 0 | 0 | 0 | 0 | 0 | 0 | 0 | 0 | 0 | 0 | 0 | 0 | 0 | 0 | 0 | 0 | 0 | 0 | 0 |
| SWITCHING SURGE (VOLTAGE) | 0 | 0 | 2 | 4 | 0 | 0 | 0 | 0 | 2 | 0 | 0 | 0 | 0 | 0 | 1 | 0 | 0 | 0 | 0 | 1 | 0 | 0 | 0 | 0 |
| DYNAMIC OVERVOLTAGE | 0 | 0 | 0 | 0 | 0 | 0 | 0 | 0 | 0 | 0 | 0 | 0 | 0 | 0 | 0 | 0 | 0 | 0 | 0 | 0 | 0 | 0 | 0 | 0 |
| INSTABILITY | 0 | 0 | 0 | 0 | 0 | 0 | 0 | 0 | 0 | 0 | 1 | 0 | 0 | 0 | 0 | 0 | 0 | 0 | 0 | 0 | 0 | 0 | 0 | 0 |
| SUB-TOTAL (POWER SYSTEM COND. /CONF.) | 11 | 33 | 86 | 135 | 0 | 3 | 1 | 53 | 4 | 101 | 2 | 2 | 8 | 13 | 1 | 22 | 0 | 5 | 1 | 4 | 0 | 7 | 0 | 0 |

(Continued)



Copyright © 1998 IEEE. All rights reserved.

Table 18. (Continued)

| CAUSE | 230 KV | | | | | | 345 KV | | | | | | 500 KV | | | | | | 765 KV | | | | | |
|---|---|---|---|---|---|---|---|---|---|---|---|---|---|---|---|---|---|---|---|---|---|---|---|---|
| | LINE | | TERMINAL | | UNKNOWN | | LINE | | TERMINAL | | UNKNOWN | | LINE | | TERMINAL | | UNKNOWN | | LINE | | TERMINAL | | UNKNOWN | |
| | MOM. | SUST. | MOM. | SUST. | MOM. | SUST. | MOM. | SUST. | MOM. | SUST. | MOM. | SUST. | MOM. | SUST. | MOM. | SUST. | MOM. | SUST. | MOM. | SUST. | MOM. | SUST. | MOM. | SUST. |
| **ENVIRONMENT** | | | | | | | | | | | | | | | | | | | | | | | | |
| ENVIRONMENT | 221 | 311 | 5 | 14 | 0 | 0 | 126 | 273 | 12 | 8 | 0 | 0 | 2 | 3 | 1 | 0 | 0 | 0 | 0 | 8 | 0 | 0 | 0 | 0 |
| LIGHTNING | 843 | 444 | 4 | 8 | 5 | 1 | 1 335 | 268 | 0 | 2 | 11 | 13 | 261 | 90 | 1 | 0 | 0 | 0 | 132 | 51 | 0 | 0 | 0 | 0 |
| WEATHER | 181 | 226 | 0 | 0 | 0 | 8 | 28 | 82 | 0 | 0 | 72 | 18 | 192 | 16 | 0 | 0 | 0 | 0 | 13 | 21 | 0 | 0 | 0 | 0 |
| HURRICANE | 8 | 10 | 0 | 0 | 0 | 0 | 0 | 1 | 0 | 0 | 0 | 0 | 0 | 0 | 0 | 0 | 0 | 0 | 0 | 0 | 0 | 0 | 0 | 0 |
| HAIL | 0 | 0 | 0 | 0 | 0 | 0 | 0 | 0 | 0 | 0 | 0 | 0 | 0 | 0 | 0 | 0 | 0 | 0 | 0 | 0 | 0 | 0 | 0 | 0 |
| ICE | 5 | 10 | 0 | 6 | 0 | 5 | 108 | 89 | 0 | 0 | 0 | 8 | 0 | 4 | 0 | 0 | 0 | 0 | 8 | 8 | 0 | 0 | 0 | 0 |
| RAIN | 3 | 3 | 0 | 3 | 0 | 2 | 2 | 0 | 0 | 0 | 0 | 0 | 2 | 5 | 0 | 0 | 0 | 0 | 0 | 0 | 0 | 0 | 0 | 0 |
| SLEET | 0 | 0 | 0 | 0 | 0 | 0 | 0 | 0 | 0 | 0 | 0 | 0 | 0 | 0 | 0 | 0 | 0 | 0 | 0 | 0 | 0 | 0 | 0 | 0 |
| SNOW | 4 | 1 | 0 | 0 | 0 | 0 | 0 | 0 | 0 | 0 | 0 | 0 | 0 | 0 | 0 | 0 | 0 | 0 | 0 | 0 | 0 | 0 | 0 | 0 |
| THUNDERSTORM | 35 | 32 | 0 | 0 | 1 | 11 | 9 | 32 | 2 | 0 | 3 | 3 | 0 | 1 | 0 | 1 | 0 | 2 | 0 | 0 | 0 | 0 | 0 | 0 |
| TORNADO | 1 | 6 | 0 | 0 | 0 | 2 | 1 | 11 | 0 | 0 | 0 | 3 | 0 | 2 | 0 | 0 | 0 | 0 | 0 | 0 | 0 | 0 | 0 | 0 |
| HIGH WIND | 15 | 35 | 3 | 0 | 0 | 1 | 34 | 75 | 0 | 0 | 1 | 1 | 1 | 9 | 0 | 0 | 0 | 0 | 18 | 5 | 0 | 0 | 0 | 0 |
| CONTAMINATION | 0 | 71 | 0 | 0 | 0 | 0 | 40 | 21 | 2 | 12 | 4 | 3 | 25 | 6 | 0 | 0 | 0 | 0 | 0 | 2 | 0 | 0 | 0 | 0 |
| AGRICULTURE | 0 | 0 | 0 | 0 | 0 | 0 | 0 | 0 | 0 | 0 | 0 | 0 | 1 | 0 | 0 | 0 | 0 | 0 | 0 | 0 | 0 | 0 | 0 | 0 |
| BIRD DROPPINGS | 0 | 0 | 0 | 0 | 0 | 0 | 0 | 3 | 0 | 0 | 0 | 0 | 15 | 8 | 0 | 0 | 0 | 0 | 0 | 0 | 0 | 0 | 0 | 0 |
| INDUSTRIAL | 0 | 0 | 0 | 0 | 0 | 0 | 0 | 2 | 0 | 0 | 0 | 0 | 0 | 0 | 0 | 0 | 0 | 0 | 0 | 0 | 0 | 0 | 0 | 0 |
| SALT | 0 | 0 | 0 | 0 | 0 | 0 | 0 | 4 | 3 | 4 | 0 | 0 | 0 | 0 | 0 | 0 | 0 | 0 | 0 | 0 | 0 | 0 | 0 | 0 |
| SMOG | 0 | 0 | 0 | 0 | 0 | 0 | 0 | 0 | 0 | 0 | 0 | 0 | 0 | 0 | 0 | 0 | 0 | 0 | 0 | 0 | 0 | 0 | 0 | 0 |
| EARTH MOVEMENT | 0 | 0 | 1 | 0 | 0 | 0 | 0 | 0 | 0 | 0 | 0 | 0 | 0 | 0 | 0 | 0 | 0 | 0 | 0 | 0 | 0 | 0 | 0 | 0 |
| FLOOD | 0 | 0 | 0 | 0 | 0 | 0 | 0 | 0 | 0 | 0 | 0 | 0 | 0 | 0 | 0 | 0 | 0 | 0 | 0 | 0 | 0 | 0 | 0 | 0 |
| FIRE | 7 | 8 | 0 | 4 | 0 | 1 | 7 | 13 | 0 | 1 | 0 | 0 | 26 | 30 | 1 | 1 | 0 | 0 | 0 | 0 | 0 | 0 | 0 | 0 |
| GALLOPING CONDUCTORS | 0 | 0 | 0 | 0 | 0 | 0 | 24 | 51 | 0 | 0 | 0 | 0 | 0 | 0 | 0 | 0 | 0 | 0 | 0 | 0 | 0 | 0 | 0 | 0 |
| AEOLIAN VIBRATION | 0 | 0 | 0 | 0 | 0 | 0 | 0 | 0 | 0 | 0 | 0 | 0 | 0 | 0 | 0 | 0 | 0 | 0 | 0 | 0 | 0 | 0 | 0 | 0 |
| SUB-TOTAL (ENVIRONMENT) | 1 321 | 1 159 | 13 | 35 | 5 | 31 | 1 723 | 905 | 19 | 27 | 91 | 49 | 545 | 174 | 3 | 2 | 0 | 2 | 171 | 95 | 0 | 0 | 0 | 0 |
| **OTHER** | | | | | | | | | | | | | | | | | | | | | | | | |
| MISCELLANEOUS OR OTHER | 4 | 265 | 2 | 0 | 0 | 4 | 112 | 301 | 32 | 127 | 227 | 258 | 5 | 19 | 0 | 0 | 9 | 13 | 0 | 9 | 1 | 0 | 29 | 31 |
| UNKNOWN | 147 | 318 | 24 | 13 | 58 | 127 | 65 | 89 | 2 | 6 | 620 | 471 | 50 | 47 | 4 | 2 | 15 | 13 | 3 | 17 | 0 | 4 | 33 | 14 |
| SUB-TOTAL (OTHER) | 151 | 583 | 26 | 13 | 58 | 131 | 177 | 394 | 34 | 133 | 847 | 729 | 55 | 66 | 4 | 2 | 24 | 26 | 3 | 26 | 1 | 4 | 62 | 45 |
| **SUB-TOTAL (NON-SCHEDULED OUTAGES)** | 1 655 | 2 951 | 265 | 663 | 66 | 176 | 2 023 | 1 736 | 578 | 1 414 | 962 | 799 | 669 | 401 | 44 | 187 | 24 | 34 | 188 | 214 | 51 | 131 | 62 | 45 |
| **SCHEDULED OUTAGE (3)** | | | | | | | | | | | | | | | | | | | | | | | | |
| UNSPECIFIED PLANNED | 1 | 0 | 2 | 1 | 0 | 0 | 0 | 0 | 0 | 0 | 0 | 0 | 0 | 0 | 0 | 2 | 0 | 0 | 0 | 0 | 0 | 0 | 0 | 0 |
| CONSTR., INSTALL, MODIFICATION | 3 | 0 | 0 | 1 | 0 | 0 | 0 | 3 | 0 | 1 | 0 | 0 | 0 | 0 | 0 | 0 | 0 | 0 | 0 | 0 | 0 | 0 | 0 | 0 |
| TRANSMISSION CIRCUIT | 1 | 29 | 0 | 3 | 0 | 0 | 0 | 7 | 0 | 2 | 0 | 0 | 0 | 8 | 0 | 1 | 0 | 0 | 0 | 0 | 0 | 0 | 0 | 0 |
| TERMINAL EQUIP MAINTENANCE | 0 | 0 | 4 | 19 | 0 | 0 | 0 | 0 | 0 | 1 | 0 | 0 | 0 | 0 | 0 | 0 | 0 | 0 | 0 | 0 | 0 | 0 | 0 | 0 |
| TEST OR INSPECTION | 0 | 1 | 6 | 10 | 0 | 1 | 1 | 0 | 0 | 6 | 0 | 0 | 0 | 0 | 0 | 5 | 0 | 0 | 0 | 0 | 0 | 0 | 0 | 0 |
| FOREIGN UTILITY REQUEST | 0 | 1 | 0 | 3 | 0 | 2 | 0 | 1 | 0 | 0 | 0 | 0 | 0 | 0 | 0 | 0 | 0 | 0 | 0 | 0 | 0 | 0 | 0 | 0 |
| SYSTEM CONDITION | 0 | 7 | 6 | 15 | 0 | 0 | 0 | 0 | 0 | 6 | 0 | 0 | 0 | 0 | 0 | 8 | 0 | 0 | 0 | 0 | 0 | 0 | 0 | 0 |
| ROUTINE OPERATION | 0 | 3 | 0 | 4 | 0 | 0 | 0 | 2 | 0 | 0 | 0 | 0 | 0 | 4 | 0 | 0 | 0 | 0 | 0 | 0 | 0 | 0 | 0 | 0 |
| **SUB-TOTAL (SCHEDULED OUTAGES)** | 5 | 41 | 18 | 56 | 0 | 3 | 1 | 13 | 0 | 16 | 0 | 0 | 0 | 12 | 0 | 16 | 0 | 0 | 0 | 0 | 0 | 0 | 0 | 0 |
| **TOTAL NUMBER OF OUTAGES** | 1 660 | 2 992 | 283 | 719 | 66 | 181 | 2 024 | 1 732 | 579 | 1 430 | 962 | 799 | 669 | 413 | 44 | 203 | 24 | 34 | 188 | 214 | 51 | 131 | 62 | 45 |
| **EXPOSURE** | | | | | | | | | | | | | | | | | | | | | | | | |
| MILE-YEARS (HUNDREDS) | 2 325 | | ---- | | ---- | | 2 329 | | ---- | | ---- | | 784 | | ---- | | ---- | | 399 | | ---- | | ---- | |
| TERMINAL-YEARS | ---- | | 11 681 (4) | | ---- | | ---- | | 8 490 (4) | | ---- | | ---- | | 2 089 (4) | | ---- | | ---- | | 433 (4) | | ---- | |
| CIRCUIT-YEARS | 7 265 | | 5 497 (4) | | 5 497 (4) | | 5 177 | | 4 726 (4) | | 4 726 (4) | | 1 221 | | 1 037 (4) | | 1 037 (4) | | 456 | | 216 (4) | | 216 (4) | |
| **OUTAGE RATE** | | | | | | | | | | | | | | | | | | | | | | | | |
| PER 100 MILE-YEAR | 0.714 | 1.287 | ---- | ---- | ---- | ---- | 0.869 | 0.752 | ---- | ---- | ---- | ---- | 0.853 | 0.527 | ---- | ---- | ---- | ---- | 0.471 | 0.536 | ---- | ---- | ---- | ---- |
| PER TERMINAL-YEAR | ---- | ---- | 0.024 | 0.062 | ---- | ---- | ---- | ---- | 0.061 | 0.151 | ---- | ---- | ---- | ---- | 0.021 | 0.097 | ---- | ---- | ---- | ---- | 0.118 | 0.302 | ---- | ---- |
| PER CIRCUIT-YEAR | 0.228 | 0.412 | 0.051 | 0.131 | 0.012 | 0.033 | 0.391 | 0.338 | 0.123 | 0.303 | 0.204 | 0.169 | 0.548 | 0.388 | 0.042 | 0.196 | 0.023 | 0.033 | 0.412 | 0.468 | 0.236 | 0.606 | 0.287 | 0.206 |

NOTES:

1. EXCLUDES COMMON MODE OUTAGES.
2. EXCLUDES ALL OUTAGES REPORTED WITH INCOMPLETE DURATION DATA.
3. REPORTED AS 'AUTOMATIC' OR 'FORCED MANUAL' OUTAGES.
4. EXCLUDES CIRCUITS WHOSE OUTAGES WERE REPORTED WITH INCOMPLETE DURATION DATA.

Copyright © 1998 IEEE. All rights reserved.

exposure (in 100-mile-years) to obtain a line outage rate per 100-miles per year. In a similar fashion, the total number of terminal-related primary outages is normalized by the terminal exposure (in terminal-years) to estimate a line outage rate per terminal per year. The total number of outages for each voltage level (line-related, terminal-related, and unknown) is normalized by the number of circuit-years to develop a general outage rate per circuit per year.

As an example of the use of the outage rates given at the bottom of Table 18, consider the calculation of the rate of occurrence of sustained outages on a particular 230kV circuit, ORS(230), as a function of circuit length and number of circuit terminals. The following equation would be used.

$$ORS(230) = ORSL(230) * \frac{\text{Circuit Length in Miles}}{100} + ORST(230) * (\text{No. of Circuit Terminals}) + ORSU(230)$$

where ORS(230) is the rate of occurrence (per year) of sustained outages for a particular 230kV circuit,
ORSL(230) is the sustained outage rate per 100 miles for 230kV circuits,
ORST(230) is the sustained outage rate per terminal for 230kV circuits, and
ORSU(230) is the sustained outage rate for the average 230kV circuit reflecting those cases where the origin of the problem is either unknown or not specified.

Thus, for a three-terminal, 50-mile, 230kV circuit,

$$ORS = 1.287 * \frac{50}{100} + 0.062 * 3 + 0.033$$
$$= 0.8625 \text{ sustained forced outages per year.}$$

To calculate the rate of occurrence of sustained outages of the average 230kV circuit, ORSA(230), the following equation would be used.

$$ORSA(230) = ORSLA(230) + ORSTA(230) + ORSU(230)$$

where ORSA(230) is the sustained outage rate (per year) for the average 230kV circuit,
ORSLA(230) is the sustained outage rate for the average 230kV circuit due specifically to line-related outages,
ORSTA(230) is the sustained outage rate for the average 230kV circuit due specifically to terminal-related outages,
ORSU(230) is defined above.

Thus, for the average 230kV line,

$$ORSA(230) = 0.412 + 0.131 + 0.033$$
$$= 0.576 \text{ sustained forced outages per year.}$$

The reader is cautioned not to draw conclusions about the ratio of line-related to terminal-related outages reported in Table 18, since a significant number of terminal-related outage records were removed from the database due to an irreconcilable data deficiency.

Table 19 summarizes the distribution of causes, by voltage, of the circuit outages designated as "Planned." Of the 78 responding utilities, 63 reported planned outages. After reviewing the ratio of reported planned outages to the total number of reported outages for each utility, it was observed that some utilities seemed to report planned outages only on an occasional basis. To adjust for this inconsistency in the calculation of planned outage rates, only the planned outages and circuit exposures of those utilities whose ratio of reported planned outages to total reported outages exceeded 15% were used. As a result, Table 19 represents the planned outages and circuit-years exposure of 58 utilities. The number of planned outage records used drops by a mere 0.03% (from 21,321 to 21,259). The ratios for the remaining 58 utilities ranged from 25% to 98% (with an average of 65%).

Table 19 includes 129 of the 181 "Automatic" or "Forced Manual" outages with "Scheduled" outage cause, listed in Table 18. These belong to the 58 utilities assumed to have reported all planned outages.

Table 20 classifies the various combinations of one or more circuit outages that comprise the database of outage events. Since the data from several NERC regions consisted only of single-circuit outage events, circuit outages with identical initiation times (to the minute) within the same utility were identified. There is a high probability that these simultaneous circuit outages were, indeed, related events. These are summarized in Table 20 as "Independent Simultaneous" outages. (Note that the independent simultaneous multiple-outage events may easily be recast as independent events. For example, an independent simultaneous event involving three circuit outages in Table 20 may alternatively be considered as three independent events, each involving one circuit.)

Excluded from Table 20 are the data from those submissions consisting entirely of independent primary outages where the duration of the outage was given, rather than the specific outage start and end times (a result of a required data conversion). In this case, it was impossible to identify simultaneous start times.

When an outage event involved a number of circuits, each with a different "Multiple Outage" code, the question arises: What multiple-outage classification should be assigned to this outage? The Working Group's response was arbitrary, but rational. The seven different multiple-outage types were subjectively ranked in order of decreasing probability of occurrence:

- Independent
- Independent Simultaneous
- Direct Secondary
- Common-Terminal Common Mode
- Indirect Secondary
- Common-Tower Common Mode
- Common-Right-of-Way Common Mode

In Table 20, an event is classified according to the least probable multiple-outage type recorded for one or more circuits within the event, and by the voltage of the circuit(s) on which this least probable outage type occurred. For example, using the above ordering for decreasing probability, if an event had involved three circuit outages of types: primary, direct secondary, and indirect secondary, the three-circuit event would have been classified "indirect secondary"--the least probable outage type in the event. The event would have been classified under the voltage level of the circuit whose outage was a specific consequence of the indirect secondary occurrence. As another example, consider an event that had included a common-tower common-mode outage of two lines and, because of a stuck breaker, also had included an indirect secondary outage. This


Copyright © 1998 IEEE. All rights reserved.

| CAUSE | 230KV | 345KV | 500KV | 765KV |
|---|---|---|---|---|
| UNSPECIFIED PLANNED | 29.68% | 57.19% | 40.87% | 84.69% |
| CONSTRUCTION, INSTALLATION, MODIFICATION | 11.51% | 10.55% | 4.89% | 1.26% |
| TRANSMISSION CIRCUIT MAINTENANCE | 18.86% | 11.22% | 8.66% | 1.83% |
| TERMINAL EQUIPMENT MAINTENANCE | 13.28% | 12.12% | 8.40% | 3.67% |
| TEST OR INSPECTION | 11.45% | 6.32% | 11.84% | 1.61% |
| FOREIGN UTILITY REQUEST | 1.83% | 0.36% | 1.19% | 0.00% |
| SYSTEM CONDITION | 0.52% | 1.83% | 21.36% | 6.94% |
| ROUTINE OPERATION | 8.55% | 0.22% | 1.79% | 0.00% |
| OTHER THAN SCHEDULED (2) | 4.33% | 0.20% | 0.99% | 0.00% |
| TOTAL PERCENT | 100% | 100% | 100% | 100% |
| TOTAL NUMBER OF OUTAGES (3) (4) | 5 031 | 12 972 | 1 512 | 1 744 |
| | | | | |
| SCHEDULED OUTAGES FROM TABLE 18 (5) | 78 | 28 | 23 | 0 |
| TOTAL SCHEDULED OUTAGES | 5 109 | 13 000 | 1 535 | 1 744 |
| TOTAL NUMBER OF CIRCUIT-YEARS (3) | 2 415 | 4 112 | 411 | 207 |
| PLANNED OUTAGE RATE (PER CIRCUIT-YEAR) | 2.12 | 3.16 | 3.73 | 8.41 |

Notes: (1) Excludes outages classified as secondary or common mode.
(2) Outage Type listed as "Planned" but Outage Cause was other than "Scheduled."
(3) Includes circuits from only those utilities whose reported "Planned" outages comprise at least 15% of their total reported outages.
(4) Total excludes the 181 outages in Table 18 with "Scheduled" Outage Cause.
(5) 129 "Scheduled" outages from Table 18 from those utilities whose reported "Planned" outages comprise at least 15% of their total reported outages.

Table 20. Classification of Multiple Outage Events by Outage Type and Voltage.

| VOLTAGE (KV) | TOTAL CIRCUITS INVOLVED IN OUTAGE EVENT | INDEPENDENT SINGLE AND SIMULTANEOUS | INVOLVING DIRECT SECONDARY OUTAGES | INVOLVING COMMON-TERMINAL COMMON-MODE OUTAGES | INVOLVING INDIRECT SECONDARY OUTAGES | INVOLVING COMMON-TOWER COMMON-MODE OUTAGES | INVOLVING COMMON-R.O.W. COMMON-MODE OUTAGES |
|---|---|---|---|---|---|---|---|
| **230** | 1 | 3 320 | 41 | 11 | 6 | 2 | 0 |
| | 2 | 303 | 46 | 26 | 26 | 1 | 0 |
| | 3 | 39 | 4 | 2 | 6 | 0 | 0 |
| | 4 | 18 | 0 | 1 | 3 | 1 | 0 |
| | 5 | 7 | 1 | 0 | 0 | 1 | 0 |
| | 6 | 0 | 0 | 0 | 0 | 0 | 0 |
| | 7 | 3 | 0 | 0 | 0 | 0 | 0 |
| | 8 | 2 | 0 | 0 | 0 | 0 | 0 |
| | Total 230KV | 3 692 | 92 | 40 | 41 | 5 | 0 |
| **345** | 1 | 5 807 | 20 | 9 | 9 | 3 | 4 |
| | 2 | 577 | 52 | 61 | 14 | 18 | 4 |
| | 3 | 99 | 8 | 13 | 2 | 5 | 1 |
| | 4 | 16 | 0 | 2 | 0 | 1 | 0 |
| | 5 | 1 | 1 | 0 | 0 | 0 | 0 |
| | 6 | 1 | 0 | 2 | 1 | 0 | 0 |
| | 7 | 1 | 0 | 0 | 0 | 0 | 0 |
| | Total 345KV | 6 502 | 81 | 87 | 26 | 27 | 9 |
| **500** | 1 | 721 | 10 | 5 | 1 | 0 | 0 |
| | 2 | 35 | 58 | 4 | 4 | 0 | 0 |
| | 3 | 3 | 19 | 0 | 1 | 0 | 0 |
| | 4 | 0 | 2 | 0 | 0 | 0 | 0 |
| | 5 | 0 | 1 | 0 | 0 | 0 | 0 |
| | Total 500KV | 759 | 90 | 9 | 6 | 0 | 0 |
| **765** | 1 | 295 | 1 | 0 | 0 | 0 | 0 |
| | 2 | 36 | 12 | 4 | 0 | 0 | 0 |
| | 3 | 2 | 4 | 1 | 1 | 0 | 0 |
| | 4 | 2 | 0 | 0 | 0 | 0 | 0 |
| | 5 | 0 | 0 | 0 | 0 | 0 | 0 |
| | 6 | 1 | 0 | 0 | 0 | 0 | 0 |
| | Total 765KV | 336 | 17 | 5 | 1 | 0 | 0 |
| **Grand Total** | | 11 289 | 280 | 141 | 74 | 32 | 9 |

Copyright © 1998 IEEE. All rights reserved.

event would have been classified "common-tower common mode." The voltage level under which the event would have been classified was that of the common tower line. The above ordering of multiple outage types is somewhat validated by the decreasing magnitude of the Grand Totals in Table 20, as one moves from left to right, corresponding to moving from top to bottom of the above list of multiple outage types.

The first row of entries in Table 20 lists multiple-line outages that appear to involve only a single circuit. These entries arise where the multiple outage involved one or more circuits operating at a voltage lower than 230kV or when the initiating event was a planned outage. Neither lower voltage nor planned circuit outages would appear in the forced outage database on which Table 20 is based.

Table 21 summarizes the incidence of each of the various types of fault that initiated primary outages. These are classified by voltage, by problem type (line-related, terminal-related, or unknown), and whether the resulting outage was momentary or sustained. A high percentage of the fault types were designated as "Unknown" or were not classified at all. Table 21 includes the 181 automatic and forced-manual outage events with "Scheduled" outage causes presented in Table 18.

Table 22 summarizes the distribution of the restoration times of automatic and forced-manual outage events. The first portion of the table reports an analysis of the outage durations that excludes all forced outages of unusually long duration (arbitrarily defined here as outages lasting more than 1000 hours). Inclusion of even one such outage event would significantly increase average duration. The rationale for this action was that, even though such an outage may have, in fact, begun as a forced outage, it was eventually transformed to "scheduled" outage as the power system was adjusted to reestablish a secure and economic operating state. The extracted outages are summarized in the second portion of Table 22.

If the outage duration were exponentially distributed, the ratio of the average to the median would be .632/.500 or 1.264. In Table 22 the ratio ranges between 9.1 and 64.1. It is reasonable to conclude that the urgency of repair (e.g., working overtime, not working overtime, etc.) varies from outage to outage as do the requirements for restoration (switching, repair, replacement, etc.).

Table 23 summarizes by voltage level, first, the incidence of the different outage types. Of a total of 36 846 primary outage records, 15 525 were "Automatic" or "Forced-Manual" outages, the remaining 21 321 were "Planned." At 345kV and above, there is a high ratio of "Forced-Manual, Sustained" outages to "Automatic, Sustained" outages relative to the same ratio at 230kV. This raises a question about postponable outages and the variations among utilities in the distinction between a deferred forced-manual outage and a scheduled outage. (Reference [5] provides a definition for Scheduled Outage: "An intentional manual outage that could have been deferred without increasing risk to human life, risk to property, or damage to equipment.") Unfortunately, information on this arbitrary distinction was not requested in the survey.

The second portion of Table 23 summarizes the degrees of sustained primary forced outage. Since most circuits have only two terminals and no sectionalizing breakers, a fault on the circuit usually resulted in completely de-energizing the circuit. A terminal fault may or may not have de-energized the circuit.

The third portion of Table 23 shows the variation in the effect of sustained primary forced outages. Nearly 30% of all sustained outages had no adverse effect; the effect of 62% were not classified.

Table 24 summarizes the data reported on the nature of restoration following forced (automatic, forced-manual, and not-specified) and planned primary outages. As expected, most planned outages are sustained in nature and are returned to service through manual or supervisory-controlled switching. Most sustained forced outages are similarly restored. Most momentary forced outages are returned through automatic switching. In this table, planned outage events with missing end times were assumed to be momentary.

## DATA ENHANCEMENT

Often outage records were found to be incomplete. Depending on which fields happened to have been left blank, the use of an outage record may range from limited application to none at all. Certain inferences, however, were made based on information provided elsewhere in the same outage record (that is, the start and end times of the outage, and outage cause). This information provided a basis for filling certain blank fields with codes other than an "NC" for "Not Classified." The bases for assigning a meaningful code to particular fields are as follows. (Any addition to a data record was identified in a new field of what became an augmented data record; the original record was not altered.)

Outage Type An outage may be classified as automatic, forced-manual, or planned based on how it was initiated. When the Outage Type field was left blank, the outage was classified as "Automatic" if the outage cause was one that would precipitate a phase-to-ground fault. Referring to the Cause Codes given in Figure 3, this was considered the case for outage causes: Contamination (5C), and Foreign Interference (cause codes with prefix "3") except for Human (3H) and Tree (3T). An outage was also classified "Automatic" if the outage cause was identified as a Defective Protective System (1SP), Improper Relay Setting (2A), or Power System Condition: Out of Step (4C), Relay Incorrect Operation (4F), Overload Trip (4G), Switching Surge (4J), Dynamic Overvoltage (4K), or Instability (4L). If the outage type was left blank and the outage cause was any scheduled outage (cause code with prefix "6"), the outage type was classified "Planned."

Multiple Outages In cases where a utility had left the Multiple Outage field blank, the circuit outage was assumed to be "Primary/Independent" (I). If, however, it had the same start-time (to the minute) as one or more other circuit outages reported by the same utility, it was, in addition, recognized as "Simultaneous" (IS). If a utility was observed to report all circuit outages as primary/independent, and it was also observed that some of that utility's circuit outages had identical start-times, an "S" was added to the existing "I" to yield the independent and simultaneous code (IS). In either case, the "IS" indicates that the circuit outages in the same utility with simultaneous start times may have been related and part of a single event.

Fault Type The Transmission Outage Data Submission Guide stated that a blank entry in the "Fault Type" data field is intended to mean "No Fault." This, however, led to some confusion in the interpretation of the data submitted. That is, when the data submitter made no attempt to enter fault-type information, care was required not to confuse this with a series of outages each of which had "No Fault." An "NC" was


Copyright © 1998 IEEE. All rights reserved.

Table 21. Primary Automatic and Forced Manual Outages * by Fault Type, Problem Type, and Duration Class.

| FAULT TYPE | 230 KV | | | | | | 345 KV | | | | | | 500 KV | | | | | | 765 KV | | | | | |
|---|---|---|---|---|---|---|---|---|---|---|---|---|---|---|---|---|---|---|---|---|---|---|---|---|
| | LINE | | TERMINAL | | UNKNOWN | | LINE | | TERMINAL | | UNKNOWN | | LINE | | TERMINAL | | UNKNOWN | | LINE | | TERMINAL | | UNKNOWN | |
| | MOM. | SUST. | MOM. | SUST. | MOM. | SUST. | MOM. | SUST. | MOM. | SUST. | MOM. | SUST. | MOM. | SUST. | MOM. | SUST. | MOM. | SUST. | MOM. | SUST. | MOM. | SUST. | MOM. | SUST. |
| NO FAULT OR NO OPEN | 21.14% | 18.01% | 89.75% | 74.97% | 16.67% | 12.71% | 2.27% | 11.02% | 15.54% | 27.48% | 2.29% | 3.25% | 5.23% | 27.12% | 68.18% | 67.49% | 0.00% | 32.35% | 1.60% | 29.44% | 0.00% | 11.45% | 0.00% | 0.00% |
| SINGLE PHASE TO GROUND | 52.89% | 24.57% | 4.95% | 6.54% | 34.85% | 11.60% | 17.29% | 38.41% | 5.70% | 3.36% | 14.97% | 11.39% | 74.59% | 50.36% | 4.55% | 6.87% | 0.00% | 0.00% | 39.36% | 43.46% | 0.00% | 0.00% | 0.00% | 0.00% |
| PHASE TO PHASE | 5.36% | 6.99% | 0.35% | 1.95% | 3.03% | 0.55% | 0.64% | 2.23% | 0.17% | 0.56% | 0.83% | 0.13% | 3.44% | 5.08% | 0.00% | 0.00% | 0.00% | 0.00% | 0.00% | 0.00% | 0.00% | 0.00% | 0.00% | 0.00% |
| DOUBLE PHASE TO GROUND | 3.61% | 2.51% | 0.00% | 0.83% | 0.00% | 2.21% | 0.20% | 0.74% | 0.17% | 0.35% | 0.21% | 0.38% | 4.19% | 5.33% | 0.00% | 0.49% | 0.00% | 0.00% | 0.00% | 0.00% | 0.00% | 0.00% | 0.00% | 0.00% |
| THREE PHASE | 1.14% | 1.27% | 0.00% | 0.00% | 0.00% | 0.00% | 0.30% | 0.17% | 0.00% | 0.14% | 0.00% | 0.00% | 0.60% | 1.21% | 0.00% | 0.00% | 0.00% | 0.00% | 0.00% | 0.00% | 0.00% | 0.00% | 0.00% | 0.00% |
| THREE PHASE TO GROUND | 0.00% | 0.97% | 0.00% | 0.63% | 0.00% | 0.00% | 0.15% | 1.60% | 0.17% | 0.00% | 0.00% | 0.25% | 0.15% | 1.21% | 0.00% | 0.00% | 0.00% | 0.00% | 0.00% | 0.00% | 0.00% | 0.00% | 0.00% | 0.00% |
| OPEN PHASE | 0.06% | 0.30% | 0.00% | 0.14% | 0.00% | 0.00% | 0.00% | 0.06% | 0.00% | 0.00% | 0.00% | 0.00% | 0.00% | 1.21% | 0.00% | 0.49% | 0.00% | 0.00% | 1.06% | 3.27% | 0.00% | 0.00% | 0.00% | 0.00% |
| UNKNOWN | 15.18% | 45.09% | 3.16% | 13.51% | 45.45% | 72.36% | 1.93% | 5.02% | 3.80% | 3.15% | 6.86% | 16.02% | 1.20% | 1.69% | 2.27% | 2.46% | 0.00% | 11.76% | 0.53% | 1.87% | 0.00% | 0.76% | 0.00% | 2.22% |
| NOT CLASSIFIED | 0.60% | 0.30% | 1.77% | 0.83% | 0.00% | 0.55% | 77.22% | 40.75% | 74.44% | 64.97% | 74.84% | 66.58% | 10.61% | 6.78% | 25.30% | 20.20% | 100.00% | 55.88% | 57.45% | 21.96% | 100.00% | 87.79% | 100.00% | 97.78% |
| TOTAL PERCENT | 100% | 100% | 100% | 100% | 100% | 100% | 100% | 100% | 100% | 100% | 100% | 100% | 100% | 100% | 100% | 100% | 100% | 100% | 100% | 100% | 100% | 100% | 100% | 100% |
| TOTAL NO OF FAULTS | 1 660 | 2 992 | 283 | 719 | 66 | 181 | 2 024 | 1 752 | 579 | 1 430 | 962 | 769 | 669 | 413 | 44 | 209 | 24 | 34 | 188 | 214 | 51 | 131 | 82 | 45 |

*NOTE: EXCLUDES COMMON MODE OUTAGES

Table 22. Statistics of the Outage Durations (in Hours) of Sustained Primary Automatic and Forced Manual Outages (1, 2, 3) by Voltage and Problem Type.

| | 230KV | | | 345KV | | | 500KV | | | 765KV | | |
|---|---|---|---|---|---|---|---|---|---|---|---|---|
| | LINE RELATED OUTAGES | TERMINAL RELATED OUTAGES | ALL (4) FORCED OUTAGES | LINE RELATED OUTAGES | TERMINAL RELATED OUTAGES | ALL (4) FORCED OUTAGES | LINE RELATED OUTAGES | TERMINAL RELATED OUTAGES | ALL (4) FORCED OUTAGES | LINE RELATED OUTAGES | TERMINAL RELATED OUTAGES | ALL (4) FORCED OUTAGES |
| AVERAGE | 7.94 | 9.85 | 8.44 | 16.65 | 10.68 | 14.29 | 17.94 | 10.82 | 15.32 | 14.2 | 13.91 | 12.87 |
| 5 PERCENTILE | 0.02 | 0.02 | 0.02 | 0.02 | 0.03 | 0.02 | 0.02 | 0.02 | 0.02 | 0.02 | 0.12 | 0.03 |
| 10 PERCENTILE | 0.02 | 0.03 | 0.02 | 0.02 | 0.05 | 0.03 | 0.03 | 0.05 | 0.03 | 0.05 | 0.28 | 0.1 |
| 25 PERCENTILE | 0.03 | 0.13 | 0.03 | 0.05 | 0.17 | 0.08 | 0.08 | 0.17 | 0.1 | 0.2 | 0.5 | 0.37 |
| MEDIAN VALUE | 0.22 | 0.9 | 0.3 | 0.57 | 0.85 | 0.72 | 0.28 | 1.18 | 0.45 | 1.38 | 1.4 | 1.4 |
| 75 PERCENTILE | 2.2 | 3.65 | 2.37 | 6.02 | 3.85 | 4.53 | 3.18 | 6.28 | 4.68 | 8.4 | 7.07 | 7.32 |
| 90 PERCENTILE | 10.3 | 12.72 | 10.9 | 24.7 | 17.23 | 22.25 | 21.43 | 22.45 | 22.45 | 30.8 | 29.27 | 28.7 |
| 95 PERCENTILE | 23.2 | 24.27 | 24.1 | 59.88 | 41.72 | 51.45 | 77.2 | 63.27 | 74.37 | 53.92 | 59.2 | 52.25 |
| MAXIMUM VALUE | 845.27 | 823.18 | 845.27 | 976.85 | 854.02 | 976.85 | 893.08 | 180.53 | 893.08 | 294.55 | 272 | 294.55 |
| TOTAL HOURS (DURATION) | 23 693 | 7 032 | 32 726 | 29 095 | 15 252 | 56 656 | 7 411 | 2 176 | 9 911 | 3 039 | 1 822 | 5 018 |
| TOTAL NUMBER OF OUTAGES | 2 985 | 714 | 3 879 | 1 747 | 1 428 | 3 966 | 413 | 201 | 647 | 214 | 131 | 390 |

NOTES:

(1) EXCLUDES COMMON MODE OUTAGES

(2) ANY OUTAGES OF DURATION LONGER THAN 1,000 HOURS WERE EXCLUDED IN COMPILING DURATION STATISTICS (SEE BELOW)

(3) "SCHEDULED OUTAGES" SHOWN IN TABLE 18 ARE INCLUDED IN THIS TABLE

(4) THIS COLUMN IS THE SUM OF "LINE-RELATED", "TERMINAL-RELATED" AND "UNKNOWN" PROBLEM-TYPE OUTAGES

| OUTAGES LONGER THAN 1,000 HOURS | | | | | | | | | | | | |
|---|---|---|---|---|---|---|---|---|---|---|---|---|
| TOTAL HOURS (DURATION) | 55 581 | 17 339 | 74 916 | 44 345 | 11 852 | 130 743 | 0 | 4 517 | 22 038 | 0 | 0 | 0 |
| TOTAL NUMBER OF OUTAGES | 7 | 5 | 13 | 5 | 2 | 15 | 0 | 2 | 3 | 0 | 0 | 0 |

Copyright © 1998 IEEE. All rights reserved.

Table 23. Distribution of Primary Outages with Respect to Outage Type, Degree of Outage, and Effect of Outage, by Voltage.

| OUTAGE TYPE | 230 KV | 345 KV | 500 KV | 765 KV |
|---|---|---|---|---|
| SUSTAINED - AUTOMATIC | 31.60% | 6.80% | 12.47% | 7.56% |
| SUSTAINED - FORCED MANUAL | 2.61% | 6.72% | 9.75% | 6.90% |
| SUSTAINED - NOT SPECIFIED | 1.34% | 5.85% | 0.17% | 1.56% |
| MOMENTARY - AUTOMATIC | 17.50% | 14.33% | 25.33% | 11.70% |
| MOMENTARY - FORCED MANUAL | 0.55% | 0.34% | 0.07% | 0.00% |
| MOMENTARY - NOT SPECIFIED | 0.30% | 2.67% | 0.00% | 0.66% |
| PLANNED | 46.09% | 63.30% | 52.21% | 71.62% |
| TOTAL PERCENT | 100% | 100% | 100% | 100% |
| TOTAL NUMBER OF OUTAGES | 10 946 | 20 563 | 2 902 | 2 435 |

| DEGREE OF OUTAGE (SUSTAINED) | 230 KV | 345 KV | 500 KV | 765 KV |
|---|---|---|---|---|
| COMPLETE | 95.66% | 97.97% | 91.23% | 100.00% |
| PARTIAL | 0.85% | 1.06% | 8.77% | 0.00% |
| NOT CLASSIFIED | 3.49% | 0.98% | 0.00% | 0.00% |
| TOTAL PERCENT | 100% | 100% | 100% | 100% |
| TOTAL NUMBER OF OUTAGES | 3 892 | 3 981 | 650 | 390 |

| EFFECT OF OUTAGE (SUSTAINED) | 230 KV | 345 KV | 500 KV | 765 KV |
|---|---|---|---|---|
| CASCADING | 0.00% | 0.00% | 0.00% | 0.00% |
| LOSS OF GENERATION | 0.62% | 0.08% | 0.00% | 0.00% |
| LOSS OF TERMINAL BANK | 0.00% | 0.00% | 0.00% | 0.00% |
| LOSS OF LOAD | 3.47% | 0.08% | 1.85% | 0.00% |
| INSTABILITY | 0.10% | 0.00% | 0.00% | 0.00% |
| LOSS OF INTERCONNECTION | 2.24% | 4.14% | 8.92% | 0.00% |
| OVERLOAD | 0.00% | 0.00% | 0.77% | 0.00% |
| LINE DAMAGE | 2.80% | 0.03% | 1.54% | 0.00% |
| EQUIPMENT DAMAGE | 0.05% | 0.05% | 7.54% | 0.00% |
| CONTROLLED LOAD SHED | 0.03% | 0.00% | 0.00% | 0.00% |
| BLACKOUT | 0.00% | 0.05% | 0.00% | 0.00% |
| LOSS OF OTHER CIRCUITS (<230KV) | 0.59% | 0.38% | 0.00% | 3.33% |
| NO ADVERSE EFFECT | 40.34% | 15.10% | 48.46% | 43.85% |
| NOT CLASSIFIED | 49.77% | 80.11% | 30.92% | 52.82% |
| TOTAL PERCENT | 100% | 100% | 100% | 100% |
| TOTAL NUMBER OF OUTAGES | 3 892 | 3 981 | 650 | 390 |

* NOTE: EXCLUDES COMMON MODE OUTAGES

Table 24. Mode of Restoration as a Percent of Total Number of Primary Outages.

| | 230KV | | | | 345KV | | | | 500KV | | | | 765KV | | | |
|---|---|---|---|---|---|---|---|---|---|---|---|---|---|---|---|---|
| | FORCED | | PLANNED | | FORCED | | PLANNED | | FORCED | | PLANNED | | FORCED | | PLANNED | |
| | MOM. | SUST. | MOM. | SUST. | MOM. | SUST. | MOM. | SUST. | MOM. | SUST. | MOM. | SUST. | MOM. | SUST. | MOM. | SUST. |
| AUTOMATIC | 31.45% | 2.05% | 0.10% | 0.18% | 39.84% | 2.00% | 1.05% | 0.21% | 52.42% | 11.68% | 0.26% | 0.00% | 41.39% | 0.29% | 1.26% | 0.00% |
| MANUAL/SUPERVISORY | 1.00% | 32.25% | 2.50% | 66.87% | 0.42% | 35.86% | 1.38% | 95.59% | 0.58% | 29.99% | 0.53% | 82.28% | 0.00% | 52.24% | 0.06% | 98.68% |
| REPAIR/REPLACE | 0.17% | 5.41% | 1.57% | 5.57% | 0.04% | 4.32% | 0.01% | 0.26% | 0.07% | 4.04% | 0.00% | 7.80% | 0.00% | 0.58% | 0.00% | 0.00% |
| UNKNOWN | 1.42% | 26.25% | 0.10% | 23.12% | 5.94% | 10.58% | 0.02% | 1.49% | 0.07% | 1.15% | 0.00% | 9.13% | 2.17% | 3.33% | 0.00% | 0.00% |
| TOTAL # OUTAGES | 5 901 | | 5 031 | | 7 545 | | 12 972 | | 1 387 | | 1 512 | | 691 | | 1 744 | |
| TOTAL PERCENT | 100% | | 100% | | 100% | | 100% | | 100% | | 100% | | 100% | | 100% | |

* NOTE: EXCLUDES COMMON MODE OUTAGES

inserted in this field to indicate "Not Classified" only when it was obvious that a utility uniformly made no attempt to classify the type of fault. If a utility had occasionally a non-blank code in this field, it was assumed that the data submitter was consistent and that a blank field was intended to mean 'No Fault.'

## COMPARISON WITH 1965 SURVEY

The 1949, 1965 and the 1985 surveys had common basic objectives: the pooling of transmission line outage experience to gain a better understanding of outage occurrence rates and causes (especially of rare events), the correlation of line performance with design, and, in general, the promotion of formal collection of circuit outage and exposure history.

Unlike the previous two surveys, the 1985 survey partitioned initiating problems into "Line-Related" and "Terminal-Related" in an attempt to develop outage rates that were functions of circuit length and number of circuit terminals, respectively. Whereas the 1949 and 1965 surveys classified outages only as "Temporary" or "Permanent," the 1985 survey requested outage start and end times to provide a basis for estimating average outage duration. The 1985 survey also collected data on planned outages.

Table 25 provides sample comparisons of the results of the 1965 and 1985 surveys. (A similar table could be developed using 1949 survey results.) The first column provides direct comparisons of the response to the survey, the fraction of the forced outages that were "Sustained" (assumed equivalent to


Copyright © 1998 IEEE. All rights reserved.

"Permanent" in the 1965 survey), and the fraction of forced outages that were caused by lightning. (Lightning continued to be the prevalent cause of outage.)

The comparisons in the second column of Table 25 required some manipulation of the data collected in the 1965 survey to ensure a common basis. Because the exposure data for the 1965 survey were expressed only in circuit-mile-years, comparison must be confined to primary forced outage rates as a result of line-related problems. This requires that outages initiated by terminal-related problems be removed from the 1965 results.

In the calculation of the lightning outage rates in Table 24, it was assumed that the outages of "Unknown" problem type collected in the 1985 survey (Table 18) were line-related. These were then combined with

Table 25. Sample Comparisons of the Results of the 1985 and 1965 Surveys.

| | 1985 Survey | 1965 Survey |
|---|---|---|
| **Time Period Surveyed (1)** | 21 Years | 15 Years |
| | | |
| **No. of Circuits Involved** | | |
| At 230kV | 1 071 | 325 |
| At 287kV | 0 | 10 |
| At 345kV | 664 | 51 |
| At 500kV | 204 | 0 |
| At 765kV | 93 | 0 |
| Total | 2 032 | 386 |
| | | |
| **Circuit Exposure (Mile-Years)** | | |
| At 230kV | 232 454 | 145 645 |
| At 287kV | 0 | 10 678 |
| At 345kV | 232 949 | 14 743 |
| At 500kV | 78 364 | 0 |
| At 765kV | 39 945 | 0 |
| Total | 583 712 | 171 066 |
| | | |
| **No. of Primary Forced Outages (2) (Events)** | | |
| At 230kV | 5 901 | 1 659 |
| At 287kV | 0 | 213 |
| At 345kV | 7 546 | 896 |
| At 500kV | 1 387 | 0 |
| At 765kV | 691 | 0 |
| Total | 15 525 | 2 568 |
| | | |
| **No. of Primary Planned Outages (Events)** | | |
| Total | 21 259 | 0 |
| | | |
| **Fraction of Primary Forced Outages That were "Sustained" (3)** | | |
| At 230kV | 66% | 34% |
| At 287kV | -- | 24% |
| At 345kV | 53% | 19% |
| At 500kV | 47% | -- |
| At 765kV | 56% | -- |
| Overall | 57% | 29% |
| | | |
| **Fraction of Primary Forced Outages Caused by Lightning** | | |
| At 230kV | 22% | 36% |
| At 287kV | -- | 13% |
| At 345kV | 22% | 64% |
| At 500kV | 27% | -- |
| At 765kV | 24% | -- |
| Overall | 22% | 42% |

| | 1985 Survey | 1965 Survey |
|---|---|---|
| **Lightning Outage Rate (4) (Per 100-Mile-Year)** | | |
| At 230kV | 0.556 | 0.409 |
| At 287kV | -- | 0.262 |
| At 345kV | 0.698 | 3.039 |
| At 500kV | 0.473 | -- |
| At 765kV | 0.458 | -- |
| Overall | 0.596 | 0.627 |
| | | |
| **Forced Outage Rate (5) (Per 100-Mile-Year)** | | |
| At 230kV | | |
| Momentary | 0.714 | 0.648 |
| Sustained | 1.287 | 0.301 |
| Total (6) | 2.000 | 0.971 |
| At 287kV | | |
| Momentary | -- | 1.461 |
| Sustained | -- | 0.468 |
| Total (6) | -- | 1.939 |
| At 345kV | | |
| Momentary | 0.869 | 3.276 |
| Sustained | 0.752 | 0.692 |
| Total (6) | 1.621 | 3.988 |
| At 500kV | | |
| Momentary | 0.853 | -- |
| Sustained | 0.527 | -- |
| Total | 1.380 | -- |
| At 765kV | | |
| Momentary | 0.471 | -- |
| Sustained | 0.536 | -- |
| Total | 1.008 | -- |
| | | |
| **Phase-to-Ground Fault Rate (5) (Per 100-Mile-Year)** | | |
| At 230kV | 0.719 | 0.548 |
| At 287kV | -- | 0.365 |
| At 345kV | 0.510 | 3.147 |
| At 500kV | 0.902 | -- |
| At 765kV | 0.418 | -- |
| | | |
| **3-Phase & 3-Phase-to-Ground Fault Rate (5) (Per 100-Mile-Year)** | | |
| At 230kV | 0.037 | 0.010 |
| At 287kV | -- | 0.009 |
| At 345kV | 0.018 | 0.163 |
| At 500kV | 0.019 | -- |
| At 765kV | 0.000 | -- |

Notes:

(1) Time Period Surveyed: 1985 Survey, 1/65-12/85; 1965 Survey, 1/50-12/64.

(2) The event count for the 1985 survey excludes common-mode outages.

(3) Assumes that all outages of duration class "Not Reported" in the 1965 survey were sustained in nature.

(4) Assumes that all lightning outages in the 1965 survey were line-related. Includes "Line-Related" and "Unknown" and excludes "Terminal-Related" lightning problem types assembled in the 1985 survey.

(5) To approximate outage rates due to line-related problems, 1965 outage rates are adjusted to exclude terminal-related outages by removing those caused by "Terminal Equipment", "Undesired Relay Operation" and "Personnel Error". The 1985 outage rates exclude "Terminal-Related" and "Unknown" problem types.

(6) Includes those events for which Outage Type (Momentary/Sustained) was "Not Reported" in the 1965 survey.

Copyright © 1998 IEEE. All rights reserved.

those known to be "Line-Related" to calculate the line-related rate. In the results of the 1965 survey, all lightning outages were assumed to have been line-related in the calculation of a comparable rate.

To calculate forced outage and fault rates as functions of circuit length, the following assumptions were made. On the 1985 side, only the line-related outages were considered. (If the outages of "Unknown" problem type were also assumed to be line-related, the outage rate would increase--especially for 345kV.) On the 1965 side, the assumption was made that outages caused by "Terminal Equipment Failure," "Undesired Relay Operation" and "Personnel Error" were terminal-related, and that all other outages were line-related. These were subtracted from the total outage count before calculating the forced outage rate as a function of circuit length.

The sample comparison of the results of the two surveys, as presented in Table 25, suggests the following shifts in outage characteristics. In more recent years, the fraction of primary forced outages that were sustained has increased, while the fraction of primary forced outages that was caused by lightning has decreased. Lightning outage rates, however, appear to have increased in the 1985 survey (recognizing that the 345kV sample in the 1965 survey was small). The line-related primary forced outage rates also appear generally to have increased (an increase that would be even more pronounced if some fraction of the outages of "Unknown" problem-type in Table 18 were assumed to be line-related).

## CONCLUSIONS AND RECOMMENDATIONS

### On Meeting Survey Goals

In the Introduction, six goals adopted by the Working Group are listed. The first three goals relate to estimating failure rates and restoration times and gaining a better understanding of causes and effects. The results reported in this paper address all three goals with the exception of summarizing the causes of the related multiple outage events. Because of the multiplicity of outage combinations, an event-by-event study is required to adequately generalize the nature of the causes. Further effort in this area will be guided by the interests and concerns of the readers as expressed in the discussion of this paper.

To expedite the publication of the basic survey data, the fourth goal of exploring the correlation of circuit design characteristics with circuit outage rate has been left to a future effort. The nature and depth of this effort will again depend on the level of interest displayed by the readers.

The degree of success in meeting the fifth goal of updating results and determining how performance has changed since the last survey is difficult to assess. The comparison attempted in Table 25 is based on surveys of two different populations. Although the goals were similar, the circuits and their environments were not. The general manner of collecting and recording outage data may have also been different.

With regard to the sixth goal of fostering the uniform and consistent collection of transmission line outage and exposure data, the 1985 survey process was a success. The Transmission Outage Data Submission Guide, along with its companion Circuit Characteristic Data Submission Guide, developed by the Working Group, served as a model and starting point for a number of utilities that had not previously formally collected the data.

### The Next Survey

As more utilities institute transmission data collection systems, and as the data are standardized and pooled on a regional basis, the justification for and value of pooling data over a broad and diverse geographic area such as North America falls into question. It is likely that, by the year 2000, most of the utilities that responded to the 1985 survey will be contributing transmission data to regional databases. Because of the increasingly evident inadequacies of deterministic approaches to ensuring the adequacy of transmission systems, many other utilities will have likely implemented data collection systems. Because of these tendencies, the task of updating this survey will be less formidable, and more likely to succeed in satisfying goals similar to those of the 1985 effort. If, however, by the year 2000, many utilities remain uncommitted to the systematic collection of transmission data, then the new survey will collect data that would not otherwise have been assembled, and, as in the past, utility participation in data collection will have been encouraged and advanced.

Whether the effort be focused on the development of a regional database, or on a survey of North America, there should be an effort to better capture and characterize the nature of related multiple outage events. An unfortunate aspect of the 1985 survey was that large blocks of outage data were reported totally as single-circuit independent events.

Time taken in careful preparation of a future survey will pay a significant dividend when the time arrives to analyze the data. Spend time investigating the nature of available data, so that the request for data will not require a heroic effort in response. Care should be taken to clearly define terms and provide codes for all possible situations. Never use an blank field as a response option. Finally, avoid, if possible, undertaking the conversion of a contributing entity's data to the desired format. This task is best done by someone with an intimate and working knowledge of the original data collection system.

## WORKING GROUP MEMBERSHIP

| | |
|---|---|
| R. B. Adler, Chair | Philadelphia Electric |
| P. F. Albrecht | Consultant |
| G. K. Bell | Pacific Gas & Electric |
| M. P. Bhavaraju | Public Service Electric & Gas |
| B. D. Caldwell | Ontario Hydro |
| K. R. Chakravarthi | Southern Company Services |
| S. L. Daniel, Jr. | Southern Company Services |
| J. H. Doudna | Power Technologies, Inc. |
| C. R. Heising | Industrial Reliability Tech |
| A. A. Iannacone | Atlantic Electric |
| M. G. Lauby | Electric Power Research Institute |
| R. P. Ludorf | Northeast Utilities Service Co. |
| P. C. Masic | Tennessee Valley Authority |
| A. W. Schneider, Jr. | Commonwealth Edison |
| K. S. Shah | Union Electric |
| H. A. W. Volpe | Bonneville Power Administration |
| T. S. White | Mid-Continent Area Power Pool |
| H. H. Yan | Philadelphia Electric |

## ACKNOWLEDGEMENTS

The authors wish to thank the members of the Working Group and of it sponsor, the General Systems Subcommittee, for their enduring support in the development and implementation of the survey, the review and analysis of the data, and the production of this paper and its two predecessors. The Working Group is indebted to the utilities and systems that have


Copyright © 1998 IEEE. All rights reserved.

entrusted us with their data, and to the individuals who coordinated the voluntary data submission. We also wish to express our gratitude to our respective organizations for supporting this activity. Finally we wish to acknowledge the dedicated assistance of Ms. Teresa Glaze of Southern Company Services in the development of the Tables presented in this paper.

REFERENCES

[1] Electric Power Research Institute, Bulk Transmission System Component Outage Data Base, Report EL-1797, April, 1981.

[2] AIEE Committee Report, "Report on the Joint AIEE-EEI Subject Committee on Line Outages," AIEE Transactions on Power Apparatus and Systems, Vol. 71, pp. 43-61, January, 1952.

[3] IEEE-EEI Committee Report, "Extra High Voltage Line Outages," IEEE Transactions on Power Apparatus and Systems, Vol. 86, pp. 547-562, May, 1967.

[4] IEEE Task Force on the Requirements for the Survey of Line Outage Data, "IEEE T&D Working Group on Statistics of Line Outages: Background, Status and Prospects," Proceedings of the 14th INTER-RAM Conference for the Electric Power Industry, Toronto, Ontario, pp. 255-262, May 26-29, 1987.

[5] IEEE Standard Terms for Reporting and Analyzing Outage Occurrences and Outage States of Electrical Transmission Facilities, IEEE Std. 859-1987.

[6] IEEE Task Force on Line Design Characteristics, Working Group on Statistics of Line Outages, "An IEEE Survey of Transmission Line Population and Design Characteristics," IEEE Transactions on Power Delivery, Vol. 6, pp. 1934-1945, October, 1991.

Copyright © 1998 IEEE. All rights reserved.

DISCUSSION

RONALD O. GUNDERSON, Nebraska Public Power District, Hastings, Nebraska: The authors are to be commended for the effort in this immense task. The authors state that a significant number of terminal related outage records have been removed from the outage database because of irreconcilable data deficiencies. Not including these outages in the calculation of outage rates will lead to outage rates which are significantly lower than the actual outage rates of the lines. Would the authors indicate how many outage records were excluded and some examples of the type of irreconcilable data deficiencies which occurred.

Historically, outage rates for terminal related outages have been expressed in terms of outages per terminal year. The assumption is made that the number of terminal related outages is directly proportional to the number of terminals. It would be interesting to know if the data supports this assumption. Is the outage rate per terminal year for two terminal lines essentially the same as that for three terminal lines or four terminal lines? Or are the outage rates for multiple terminal lines greater because of the increased complexity of the associated protection systems and the possibility of incorrect operations? Similar questions can be asked of the bus configuration at each terminal. Reference [1] concludes that outage rates and durations for terminal related outages are different for different bus configurations. Can the task force give estimated outage rates for different bus configurations? Future collection efforts should collect data on the type of bus configuration at each terminal.

The goal of correlating circuit design characteristics with circuit outage rates is a worthwhile goal. Utilities need to know how the different design characteristics such as single circuit line vs. double circuit line and different types of construction material and configuration affect the performance of transmission lines. This information becomes more important as the transmission system becomes more heavily loaded and outages become more critical.

The industry needs to better understand what factors influence transmission line performance. By collecting data over a large area with the same format, analyses can be performed which may improve this understanding. For example, do relatively short lines in urban areas have the same performance characteristics as relatively long lines in rural areas? What is the effect of different climates on outage performance? Reference [2] describes an outage data collection format which was developed by two NERC regions and is being utilized by them. This format collects characteristic data on different types of basic construction, terminal configuration, and common exposure. Information is collected for related outage events also.

REFERENCES

[1] M. G. Lauby, D. D. Klempel, C. G. Dahl, R. O. Gunderson, E. P. Weber, P. J. Lehman, "The Effects of Terminal Complexity and Redundancy on the Frequency and Duration of Forced Outages", *IEEE Transactions on Power Systems*, Vol. PWRS-2, No. 4, Nov. 1987, pp.856-862.

[2] Transmission Outage Task Force of the Mid-America Interconnected Network, Transmission Reliability Task Force of the Mid-Continent Area Power Pool, M. G. Lauby, "Joint Development of Consistent Bulk Transmission Outage Reporting and Analysis Procedures by Two NERC Regions", *IEEE Transactions on Power Systems*, Vol. 4, No. 2, May 1989, pp. 507-516.

**M. Oprisan** (Canadian Electrical Association, Montreal, Quebec, Canada): I wish to compliment the authors, members of the Working Group on Statistics of Line Outages, on the excellent and comprehensive analysis provided in their paper. From personal experience I know what a formidable task it is to compile such a vast amount of information, ensure the consistency of data and try to derive meaningful statistics which could be of use to the contributors.

The Canadian Electrical Association has collected transmission equipment outage data since 1978 and I have included below, for comparison, a portion of the report covering the 5-year period 1986-1990 for 230 kV transmission lines, both momentary and sustained outages.

Summary of Transmission Line Statistics for Line-Related Sustained Forced Outages

| Voltage Classification | Kilometre Years (km.a) | Number of Outages | Total Time (h) | Frequency (Per 100 km.a) | Mean Duration (h) | Unavailability (%) |
|---|---|---|---|---|---|---|
| 200-299 kV | 171,104 | 929 | 11,502 | 0.5429 | 12.4 | 0.077 |

Summary of Transmission Line Statistics for Line-Related Momentary Forced Outages

| Voltage Classification | Kilometre Years (km.a) | Number of Outages | Frequency (per 100 km.a) |
|---|---|---|---|
| 200-299 kV | 171,104 | 1,008 | 0.5891 |

Summary of Transmission Line Statistics for Terminal-Related Sustained Forced Outages

| Voltage Classification | Terminal Years (a) | Number of Outages | Total Time (h) | Frequency (Per a) | Mean Duration (h) | Unavailability (%) |
|---|---|---|---|---|---|---|
| 200-299 kV | 4,870 | 658 | 3,070 | 0.1351 | 4.7 | 0.007 |

With regard to momentary and sustained outages, I noticed on page 3 of your paper under Data Summaries that a momentary outage is defined as having a restoration time of less than or equal to one minute. However, a sustained outage is defined as having a restoration time equal to or greater than two minutes. The CEA system defines a sustained outage as having a restoration time greater than one minute. Was the restoration time between one and two minutes purposefully excluded from your definitions?

On Table 18, page 4, among Defective Equipment Primary Causes you list Circuit Breakers, Transformers, Shunt Reactor Banks, etc. I was wondering if these should be actually lumped together with the transmission lines and if by doing so one does not get a somewhat distorted image of transmission line performance. In the CEA system these pieces of power equipment are analyzed separately as components of the transmission system.

I should also note that all Canadian utilities have agreed, from the beginning, to submit the transmission component inventory and outages in full and in a consistent format which resulted in meaningful and useful statistics based on a large database. This can be partly attributed to the fact that the number of utilities involved is rather small even if some of them are large in size. This comment applies to the last paragraph of



Copyright © 1998 IEEE. All rights reserved.

the "On Meeting Survey Goals" on page 12 and I should add that as far as the Canadian utilities are concerned the interest has been and I believe will always be there for collecting this type of information. I suspect that the same will be true for the U.S. utilities.

In concluding, I would like to know how you see the usefulness of such a survey conducted every 15–20 years. Surveys were conducted in 1949, 1965, 1985 and you seem to be talking about the next one in 2000. You will certainly appreciate the reason for this question since, as I mentioned before, CEA has produced such surveys annually since 1978.

Manuscript received January 26, 1993.

**MAIN Transmission Outage Task Force: G. A. Johnson,** chairman (Central Illinois Public Service Co.); **E. C. Pfeiffer** (Union Electric Co.); **P. B. Burke** (Commonwealth Edison Co.); **D. L. Smith** (Wisconsin Public Service Corp.); **A. W. Schneider, Jr.** (MAIN Coordination Center): The Mid-America Interconnected Network (MAIN) Transmission Outage Task Force was among the participants in the survey leading to this paper; thus we appreciate first hand the difficulty of providing certain requested data items which were not in our computer file of EHV transmission outages. The Data Analysis Task Force has succeeded beyond our expectations in providing "typical" performance measures which can help the industry to prioritize development of analytical tools. In addition, this survey has stimulated revisions to MAIN data collection procedures so that relevant characteristics of EHV outages are recorded permanently in an easily retrievable form.

From time to time suggestions are made to establish an ongoing collection of EHV transmission outage data covering all of North America. This would be similar to the GADS collection of generating unit outage data. This would be of questionable value because indices computed from such data would probably be poor predictors of the performance of any particular line. There are at least two reasons for this. First, overhead lines operate in very diverse environments, compensated to some extent by the line design. Second, the "vintage" of a transmission line is much more difficult to establish than that of a generating unit, as old lines are cut and extended to new terminals to meet new system requirements.

However, periodic efforts such as this paper stimulate the trend toward complete data collection on outages which is essential to make rigorous estimates of future performance, as in comparing the reliability of alternative designs.

The Data Analysis Task Force has presented forceful conclusions which should be carefully considered in creating or revising regional data collection schemes. The resulting data will be greatly enhanced, and future pooling of data will require much less effort and fewer interpretations and assumptions.

Indices computed using the methods of this paper will be less adequate for lines of more complex topology, such as the 115 kV through 161 kV transmission lines used to supply distribution substations and industrial customers from EHV points of supply. These lines may have greater impact on the reliability of supply to customers, because there is often a lower level of redundancy. They are also subject to frequent sectionalizing and switching. Does the Task Force plan to recommend data collection methods to develop useful performance indices for such lines?

Manuscript received February 16, 1993.

**J. Endrenyi and L. Wang** (Ontario Hydro, Toronto, Canada): One of the purposes of this survey is to address the need for line outage data in probabilistic modelling for planning and operation. The survey results reported in this paper involves the pooling of line outage data submitted by utilities in the U.S. and Canada. A pertinent question to ask is: can the pooling process be carried out without considering such factors as homogeneity in line design and operating environment? Similar questions have been asked in the pooling of generating unit data, and these questions are now being addressed by the Task Force on Generating Unit Data Pooling of the Application of Probability Methods Subcommittee. Unconstrained pooling may reduce the usefulness of the information.

We noticed that in Table 18 the weather-related outages are separately identified. This is, however, not sufficient information to calculate separate good- and severe-weather outage rates required in some reliability models. To obtain these rates, the average duration of severe weather periods would also be needed. Yet, this information is dependent on the region and probably cannot be pooled. Is any extension of the work foreseen to address this problem?

Finally, we would like to congratulate the members of the Data Analysis Task Force for their effort and valuable contributions in compiling and analyzing a tremendous amount of line outage data.

Manuscript received February 22, 1993.

**HELENANN VOLPE AND BRIAN SILVERSTEIN** (Bonneville Power Administration, Portland, OR). We commend the Data Analysis Task Force for the excellent job that they did in gathering and analyzing the large volume of outage data that was collected. The results are good indicators of large scale trends in outage rates for transmission lines operating at or above 230-kV.

Would the authors please expand on the "irreconcilable data deficiency" that leads to the caution not to draw conclusions about the ratio of line-related to terminal-related outages.

Reference was made, both in the paper and at the presentation, to the large amount of unanalyzed design related material in the data base [6] and the question arose as to what should be done with it. Perhaps some exploratory multi-variate analysis will point to those design parameters which warrant further investigation, either by this group or by others.

One possibility for future work is to join with the Working Group on Performance Records under the Application of Probability Methods Subcommittee, who have an ongoing effort on Data Pooling for Generators. With contributor permission, and removing utility identification, the data could also be made available to researchers in computer readable form.

Through the efforts of the Task Force, the authors now have a comprehensive understanding of the strengths and weaknesses of the data collection format that was used in this project. Some suggestions are made for

Copyright © 1998 IEEE. All rights reserved.

improvement in the section on The Next Survey. If data subsequent to 1985 can be collected in a materially similar form, it may be possible to observe trends in outage rates. This common basis for comparison will make the analysis more valuable.

Manuscript received February 22, 1993.

**R. J. Ringlee** (Power Technologies, Inc., Schenectady, NY): Appreciation and compliments are due the Data Analysis Task Force for its success in presenting results much more comprehensive than preceding surveys, results that represent a significant contribution to the overhead line performance data base and which should be of value in improving estimates of outage rate and restoration for overhead lines. Collection of data on multiple outage events is a significant addition to the data base. Data on the likelihood of these events are essential for bulk power system reliability prediction and knowledge of their likelihood is a necessary input to rational formation of reliability criteria for design of lines and stations. For example, Table 20 indicates that a significant fraction of the multiple outages were identified as arising from common-terminal common mode. Table 18 indicates that nearly one third of the sustained outages for 500 and 765 kV circuits were identified as terminal related. Data in both Tables prompt the question of root cause for the high numbers of terminal-related outages and raise the opportunity to explore the reliability benefit/cost of improved station equipment performance and alternative station designs.

The step of exploring the correlation of circuit outage rate with line design characteristics is of fundamental importance; may the Task Force receive the encouragement it seeks to continue its efforts in this direction.

The authors have indicated that trend analysis should not be attempted by comparison of the data between successive surveys owing to the differing data sets involved. The discussor agrees if the comparison were to be made between statistics representing the aggregate performance of all circuits of a given voltage. There's an alternative that might be considered if the information on specific circuits were available in successive surveys: paired comparisons. Circuits that appear in both surveys would be candidates for making estimates of trends. In like manner, paired comparisons could be made with the circuit data in the latest survey to compare the effect of design by pairing circuits of dissimilar design but located in similar geographical areas and using the data that span the same period.

Manuscript received February 24, 1993.

**T. E. McDermott** (Power Technologies, Inc., Pittsburgh, PA): The task force has effectively presented a large amount of data on transmission outages, and this information should be valuable to the industry. Other investigators may wish to pursue goal 4 of the survey, by correlating outages with certain design parameters. Would it be possible to maintain the raw data presented in this paper and in [6], in electronic format, under the auspices of the General Systems Subcommittee?

Many of the reported outages were caused by lightning. The IEEE Working Group on Estimating the Lightning Performances of Transmission Lines has a public-domain computer program (FLASH) to predict the lightning performance of overhead lines. With the outage data in this paper and the design data in [6], it may be possible to validate or improve the models in FLASH. The Electric Power Research Institute also has a program (MULTIFLASH) that offers a prediction of multi-phase and/or multi-circuit outages. The data collected by this task force would be very useful in analyzing the results of both programs, if the data were kept accessible in an electronic format.

Manuscript received March 1, 1993.

**V. S. Rashkes** (former Chief of EHV Field Tests Division of Electric Power Research Institute, Moscow, Russia; now with General Electric at the EPRI High Voltage Transmission Research Center, Lenox, MA): Statistical data on the service performance of HV/EHV transmission lines were collected and analyzed also in the USSR during many tens of years. The high interest of power engineers in each new publication on this subject demonstrates that they recognize very clearly how important and beneficial it is to use service experience for future improvements in transmission reliability.

For American power engineers it would be of interest to compare their own service experience published in the discussed paper with the Soviet one which is summarized in recent publications [1–3].

*General characteristic of Soviet transmission network.* The territory of the former USSR is much larger than that of the US (22.4 and 9.4 million sq. km respectively), its population exceeds the US population only by 10% (284 and 245 million people in 1988), so the medium density of population was much lower than in the USA. Electric energy production was significantly less than that of the USA and in 1990 reached 1.8 million GW.hours. As a result, main power flows were less than in the USA, and the HV transmission network was not so dense and multicircuit transmission was rare. Nevertheless the total length of HV transmission lines was very large and increased fast (in thousands km):

in 1960- about 150, in 1970- 450, in 1980- 780, in 1990- 1100.

Total length of EHV lines···345 kV and above—was (in thousands km):

in 1960- about 5, in 1970- 28, in 1980- 55, in 1990- 98.

The voltage level of 400–500 kV in Soviet transmissions was reached in 1956–62, 750 kV- in 1966, 1150 kV- in 1985, and in 1990 there were in operation (in thousands km):

330 kV- about 32, 500 kV- 55, 750 kV- 10, 1150 kV- 1.

All Soviet 750 and 1150 kV lines, as well as the absolute majority of 500 kV lines are single circuit. Reserves in network transmitting capacity and in generating capacity are small, so for the Soviet power utilities is very important to reach high service reliability, especially for EHV lines. Progress in line design, proper choice of insulation and overvoltage protection, wide application of high-speed autoreclosing, especially single-pole, efforts to maintain necessary level of service and repair works permitted to reach this goal. Service experience in the USSR was analyzed on a regular base (annually). This helped considerably in improving reliability.

*Service experience data.* For analysis in [1] author used data of 1981–1985 with total volume about 2.6 million km.year. These data were compared with earlier published [4–7], which covered about 0.3 million km.years during 1959–1980 but were for different regions of the USSR.

The specific number of Soviet line outages for each rated line voltage were (per 100 km.years):

| For lines | 110 kV | 150 kV | 220 kV | 330 kV | 500 kV | 750 kV |
|---|---|---|---|---|---|---|
| In 1981–1985 | 3.0 | 1.8 | 1.5 | 1.5 | 0.6 | 0.2 |
| In [4–7] | 1.5–3.5 | – | 0.5–2.0 | 1.5–3.2 | 0.58 | |



Copyright © 1998 IEEE. All rights reserved.

The spread in the data of [4–7] is caused by regional differences in insulation contamination, lightning protection etc., so the averaged figures from the more recent survey based on a bigger observation volume are more reliable. For 1150 kV lines, their total length and observation period are too small for dependable evaluation, but preliminary results show that the specific number of outages is about 0.1 per 100 km.year. It is of interest to characterize the reasons of outages for EHV lines. According to [8, 9] the causes of outages of Soviet 500 and 750 kV lines are (in % of total number of outages):

| | 500 kV | 750 kV |
|---|---|---|
| Defects of manufacturing and maintenance | 17.9 | 13.7 |
| Ice, snow, conductor galloping, etc. | 11.6 | 3.8 |
| Wind | 9.3 | 20.6 |
| Lightning | 12.7 | 20.0 |
| Flashover of contaminated insulation | 4.2 | 8.6 |
| Fire, mechanical damages by outgoing people and transport | 16.6 | 13.8 |
| Unknown reasons | 27.7 | 17.5 |

Specific number of outages in the Soviet network is in satisfactory agreement with previously published American and Canadian data including [10].

One of the goals for the analysis performed was to check the effectiveness of high-speed autoreclosing as a very inexpensive measure to improve line reliability. The percentage of arcing faults which could be potentially cleared by high-speed reclosing could be assessed only approximately because faulty phase voltage was not always of sufficient size to determine from the oscillograms of the failure if short circuit was through arc. So probability of arc faults was evaluated as:

110–220 kV- 0.6–0.9, 330 kV- 0.7–0.85, 500–750 kV- 0.65–0.75

(higher values are applicable to lines with higher specific number of outages due to lightning storms or polluted insulation flashovers). Arc faults may be created also by wind, conductor galloping, fire, outgoing vehicles' movement etc., so the incidence of arc faults is in good agreement with the above mentioned statistical reasons of trippings. Possibly, the percentage of arc faults is even higher because special analysis showed that unsuccessful high-speed reclosings originally supposed to be metal or tree short-circuits were associated with too small dead times or with multiple flashovers of contaminated insulation in unfavorable weather conditions.

The proportion of single-phase faults in the total number of line trippings increases with rated voltage and, correspondingly, with growing tower dimensions:

220 kV-0.6, 330 kV-0.8, 500 kV-0.92, 750 kV-0.98.

This means that for EHV lines single-pole high-speed reclosing becomes the main mode of reclosing. Really, although composite single- and three-phase reclosing devices are in common use in the USSR, the single-phase mode of their operation is predominant in the 330-500 kV network and is practically the only one for 750 kV lines. For 750 kV lines three-phase high-speed autoreclosing works only at mistaken trippings of the line.

Success of high-speed reclosing slightly decreases with EHV rated voltage and is somewhat less than in the USA:

| | 110 kV | 220 kV | 330 kV | 500 kV | 750 kV |
|---|---|---|---|---|---|
| Single-phase in the USSR | 0.58 | 0.73 | 0.72 | 0.62 | 0.52 |
| Single- and 3-phase total in the USSR | 0.75 | 0.76 | 0.75 | 0.62 | 0.52 |
| Single- and 3-phase total in USA [11] | 0.62 | 0.70 | 0.85 | 0.77 | 0.67. |

This primarily occurs because fault rate sharply falls with rise of rated voltage and therefore various defects that autoreclosing cannot correct become more pronounced.

It could be seen that such a simple measure as single-phase high-speed autoreclosing provides continuity of power supply through EHV lines in a half or three quarters of the outages.

Dead time for the Soviet EHV lines usually equals, in dependence of secondary arc current, 0.6–2.5 sec. Automatic devices for high-speed reclosing worked properly in 99.8% of cases. Information about reliability of other kinds of relay protection and automatic devices is given in [3].

A small specific rate of outages in 750 kV lines together with high enough efficiency of high-speed reclosure led to the situation when one tripping of such line due to its failure is statistically as frequent as one tripping due to the failure of substation equipment and 0.5–1 tripping due to malfunctioning of relay protection devices or mistakes of service personnel. The same situation was found in Canada [10]. Such data show the practical necessity of paying attention to equipment reliability, transmission schemes and personnel training.

## References

[1] V. S. Rashkes. Summary and analysis of operating data on the effectiveness of SPAR on EHV lines and experimental data on arc extinction times. Elektricheskie stanzii [Power Plants], 1989, #3 (in Russian).

[2] N. N. Belyakov, V. L. Volchek, V. V. Ilyinichnin et al. Application of single-phase autoreclosing in a complex EHV network containing 1200 kV transmission lines. CIGRE, 1990, #34-207.

[3] V. V. Ilyinichnin, K. V. Khoetzian, V. F. Lachugin et al. Service experience and field tests summarizing the protection and control devices improvement in EHV-UHV transmissions. CIGRE, 1992, #34-102.

[4] A. S. Maikopar. Arc faults on overhead transmission lines. Energia Publishing House, Moscow, 1965 (in Russian).

[5] N. N. Beljakov, K. A. Brinkis, V. S. Rashkes. Correction SPAR dead-times for 330 kV lines using their service experience. Elektricheskie stanzii, 1982, #3 (in Russian).

[6] V. V. Bochkowski, B. I. Udod. Analysis of outages reasons for 110–330 kV lines. Elektricheskie stanzii, 1984, #4 (in Russian).

[7] N. A. Melnikov, S. S. Rokotjan, A. N. Sherenzis. Electric designing of 330–500 kV overhead transmission lines. Energia Publishing House, Moscow, 1974 (in Russian).

[8] A. S. Zelichenko, B. I. Smirnov. The mechanical designing of EHV overhead transmission lines. Energoizdat Publishing House, Moscow, 1981 (in Russian).

[9] V. V. Bourgsdorf, T. B. Turskaya. Service experience for 750 kV transmission lines. Elektricheskie stanzii, 1988, #5 (in Russian).

[10] Forced outage performance of transmission equipment for the period January 1, 1978 to June 30, 1983. Montreal, Canadian Electrical Association, 1984.

[11] Automatic reclosing of transmission lines. IEEE Power System Relaying Committee report. IEEE Trans. on PAS, 1984, v.103, #2, pp. 234–245.

Manuscript received March 1, 1993.

R. B. ADLER, C. R. HEISING, T. S. WHITE, M. G. LAUBY, S. L. DANIEL JR., R. P. LUDORF: We hasten to thank the discussers for their expressions of appreciation for the efforts of the Working Group on Statistics of Line Outages. We thank them also for their

Copyright © 1998 IEEE. All rights reserved.

thoughtful and provocative comments and questions. Their discussion has motivated us to explore further the correlations and implications of the line outage and design history entrusted to us.

Several discussers raised questions on the nature of the data deficiencies that prompted the Data Analysis Task Force (DATF) to discard data. This by and large arose when we had to convert data from one form to another. In these cases, the data were submitted in a format different from the requested format. In several cases, with the help of the data submitter, the DATF developed a conversion program for both the outage and exposure data. In some cases, however, certain essential data was absent. One particularly troublesome type of conversion is from a database developed by a collection system whose primary purpose is to estimate component outage and repair rates. The IEEE format, however, is oriented to the development of outage and repair rates for the transmission circuit as a unit [1].

Concerns about the value of pooled data are ever present. Pooling of non-homogenous data always introduces questions on just what is represented. One of the conclusions of the IEEE Task Force on Generating Unit Data Pooling (of the Application of Probability Methods Subcommittee) is that one must always focus on the planned use of the pooled data in developing the survey forms. The design of the IEEE survey was guided by the goals outlined in the Introduction.

From the members of the MAIN Transmission Outage Task Force, we are pleased to hear that our efforts in developing an effective survey have stimulated review and improvement in data collection procedures. This discusser underscores a important observation: pooling transmission outage data over all of North America provides a poor basis for the predicting the performance of any specific line where weather, terrain and other characteristics are known. Such data pooling over such a broad geographic area does, however, provide initial estimates, which are then tempered in accordance with local conditions. This is especially the case for rare events such as three-phase faults at 500kV and 765kV.

The Data Analysis Task Force agrees that it is desirable to establish a guideline for the collection of outage data on transmission of voltages below 230kV (69, 115, 135 and 161kV). We would recommend that the present questionnaire serve as a starting point for a collection system for outage history at these (sub)transmission voltages.

The DATF agrees with Mr. Ringlee in his observation that a high proportion of outages (both single and multiple) are terminal related. Because of earlier-discussed data deficiencies, many terminal-related outages were not included in the summaries, while line-related outages on the same lines were included. As a result, an even higher proportion of the outages are terminal related. We agree that this observation points to improved station equipment performance as a potentially fruitful area for improving the reliability of the transmission system.

Although it would be desirable to see how the performance of particular lines may have changed from the 1965 to 1985 surveys, the data collected in the 1965 survey are lost. The comparison of circuits of different designs within the 1985 survey, but operating in similar geographic areas, is difficult because of a lack of detailed geographic information requested on the lines. This is a comparison that can, however, be made using the general regional characteristics of the host utility, and will be considered in the next phase of this work.

A clarification on our procedure for removing certain outage data is necessary to address Mr. Gunderson's concern that such omissions may lead to outage rates which are significantly lower than the actual outage rates of the lines. In all cases, the exposure data were adjusted to avoid this consequence. Both line-related and terminal-related outages had to be removed. The largest block of data removed were terminal related outages as noted in Footnote No. 4 to Table 18. The reader is cautioned not to take the ratio of terminal-related to line-related outages, since the terminal-related outages are under represented.

Mr. Gunderson suggests that terminal-related outages on a circuit may not be linearly related to the number of terminals that line has as we have assumed. The reason cited is that the complexity of protection systems increases as the number of terminals increases. Table 18 indicates that a significant portion of the terminal-related outages are due to problems with the protective system at all voltages but 765kV. At 765kV, 100% of the circuits upon which outages were reported have only two-terminals [6]. We will delve more deeply into this observation in the next phase of our work. We cannot, however, do the same for variations in bus configuration, since we did not collect data to characterize this undoubtedly important variable. We agree with Mr. Gunderson that the nature of land development and weather characteristics along the r.o.w. might correlate with outage rate. There is always the balance to be struck, however, between what data might be desirable, what data is readily available, and the possible risk of overwhelming the person assembling and submitting the data.

We agree with Messrs. Endrenyi and Wang in their observation that the weather-related outages reported in Table 18 (under the "Environment" general cause) tell us little about the impact of weather. This is because we did not ask for a characterization of weather exposure in the circuit population data. Table 18 only confirms our suspicion that weather effects are the predominant outage cause within the "Environment" category.

We expect to make better use of the lightning-related outage data in the next phase of the data analysis. Lightning


Copyright © 1998 IEEE. All rights reserved.

performance will be correlated with isokeraunic level, and with number and angle of shielding wires. We may also find correlation of lightning outages with other design characteristics.

Ms. Volpe and Mr. Silverstein identify the Working Group on Performance Records as a supportive setting for further analysis of the data. The DATF will explore the merits of this suggestion.

It has been the intent of the Working Group on Statistics of Line Outages to document thoroughly the data collection system used in the 1985 survey and to identify its weaknesses [4,6]. The goal is to state the lessons learned and possibly to ease the preparations for the next general survey. In doing so, we would hope also to facilitate the capture and observation of trends over time as Ms. Volpe and Mr. Silverstein have suggested.

Mr. Rashkes has provided some provocative observations on the practice and performance of the Russian transmission system operating at voltages similar to those that we have surveyed. Of particular interest to the DATF are the observations on the fraction of single-phase faults that have occurred on the Russian system, and on the benefits of single-pole reclosing. From Table 21 of the paper, we similarly observe that single-phase faults caused by line-related problems are the predominant cause of outage at all voltages. Whereas the Russian experience has indicated that 60% to 98% of the total trippings are from single-phase faults, our data from Table 21 indicate this portion to lie in the range from 18% to 52%. Perhaps, without single-pole switching to help indicate the nature of the fault, there is a less accurate identification of the fault type. Mr. Rashkes summarizes the success of single- and three-phase high-speed reclosing as lying in the range of a half to three-quarters. If we were to assume the "success" rate to be defined as the ratio of momentary line-related outages to the sum of momentary and sustained line-related outages, we observe a success rate in the range from a third to two-thirds. Single-pole reclosing may have a significant and important positive impact on transmission network reliability.

Some interesting comparisons may also be made to Mr. Rashkes' summary of outage causes. Wind and contamination have much less impact in our survey, which may be the result of either differences in design, or differences in operating environment. Lightning, on the other hand, has a greater impact on line outages. This may be due to a basic difference in circuit design, or to a greater incidence of lightning near those circuits on which data were reported?

We observe that the Russian data appears to be normalized only by circuit length, and not by the number of terminals involved. It appears that no distinction was made between terminal- and line-related outages.

The utilities and power pools responded to the IEEE survey of overhead transmission outages with the agreement that the "data will be held in strict confidence and only summaries will be reported..." The Working Group is, therefore, obliged not to release the detailed data for use by others. As an alternative we are willing to work with any other IEEE working group or task force in exploring the implications of the data. This would include Mr. McDermott's suggestion that we discuss possible data analysis that may be of interest to the IEEE Working Group on Estimating the Lightning Performances of Transmission Lines.

The DATF thanks Mr. Oprisan for sharing his insight on the benefits of pooling data. Since he has offered a sampling of the CEA transmission statistics, we will make a few comparisons of the results at 230kV. (The reader will recall that our data includes CEA data.) Referring to our Table 18 and converting miles to kilometers, our data indicates a line-related sustained forced outage frequency of 0.80 per 100 km.a (compared to CEA's 0.54 per 100 km.a), and momentary forced outage frequency of 0.44 per 100 km.a (compared to CEA's 0.58 per 100 km.a). Our Table 22 shows an average duration of the line-related sustained forced outages of 7.9 hours (compared to CEA's 12.4 hours). With regard to terminal-related sustained forced outages, our data indicates a frequency of 0.06 per terminal.a (compared to CEA's 0.14 per terminal.a), and a duration of 9.8 hours (compared to CEA's 4.7 hours).

Mr. Oprisan has identified a point of confusion in our definition of momentary and sustained outages. We define a momentary outage as one whose duration is one minute or less. Since we request outage start and end times only to the nearest minute, the next larger increment in duration is two minutes. Thus any outage with calculated duration of two minutes or more is considered sustained. Depending on how the data submitter may have rounded off the outage start and end times, an outage that was in fact of duration between one and two minutes may be classified momentary or sustained.

Mr. Oprisan observes that the failure of terminal equipment is listed as outage causes of circuits. Our approach treats the a transmission line and its terminal equipment as a unit, and provides statistics on the "transmission unit." An alternate approach is oriented to the development of statistics on the transmission components. The latter approach is favored by CEA. The DATF found that there are some problems with converting data collected under one approach to a form compatible with the other approach.

Again we thank the discussers for their questions, comments and recommendations. These have provided us with the impetus to forge onward with a more detailed analysis of the data collected.

Manuscript received April 13, 1993.

Copyright © 1998 IEEE. All rights reserved.

# FREQUENCY OF TRANSMISSION LINE OUTAGES IN CANADA

Don O. Koval
Dept. of Electrical Engineering
University of Alberta
Edmonton, Alberta
T6G 2G7 Canada

*Abstract* - Frequent transient and sustained forced outages of transmission equipment can significantly affect the performance of industrial and commercial power systems and the processes they control. A knowledge of the primary causes (e.g., adverse weather, defective equipment, etc. ) of transmission line sustained and transient forced outages and which physical components of a transmission line (e.g., line conductors, structure, hardware, etc.) are affected is essential for designing and maintaining reliable transmission systems. Historical transmission reliability data provides the ability to predict [1] the performance of various transmission line configurations and assess the impact of forced outages on industrial and commercial power systems. When no historical voltage sag data is available, historical transmission line reliability statistics can be used to predict the voltage sag activities at a particular site. The prediction methodology will appear in the next edition of IEEE Std. 493 (i.e., IEEE Gold Book). This paper will present a summary of the Canadian Electrical Association's Equipment Reliability Information System statistics on the forced outage performance characteristics of transmission equipment for Canadian utilities for the period 1988 - 1992. The paper will reveal the structure of the data base and present relevant summary data necessary for the application of these reliability methodologies[1].

## I. INTRODUCTION

"In 1975 the Canadian Electrical Association (CEA) adopted a proposal to create a facility for centralized collection, processing and reporting of reliability and outage statistics for electrical generation, transmission and distribution equipment. To coordinate the development of this Equipment Reliability Information System CEA constituted the Consultative Committee on Outage Statistics. In 1978, the transmission stage of the information system was implemented when Canadian utilities began supplying data on transmission equipment in accordance with the Instruction Manual for Reporting Component Forced Outages of Transmission Equipment" [2].

The performance of transmission lines can be viewed from many different perspectives. To understand the variance in these perspectives, it is necessary to define the data base structure of transmission line performance data. The structure for the CEA transmission equipment forced outage data base is shown in Figure 1.

The major classifications of transmission lines are according to their operating voltage level and their supporting structure (e.g., double pole wood construction). The forced outage data is divided into two categories; namely, sustained and transient forced outages. The sustained forced outages are further divided into "line-related" and "terminal related" forced outages while transient forced outages are only defined in terms of "line-related" forced outages. The "line-related" and "terminal related" forced outages are further subdivided into primary causes and subcomponent categories.

The identified ***primary causes*** of transmission line forced outages are:

- defective component
- adverse weather
- adverse environment
- system condition
- human element
- foreign interference
- unknown

The identified ***subcomponents*** affected by transmission line forced outages are:

- structural
- joints & deadends
- conductor
- insulation system
- ground wire
- hardware
- other

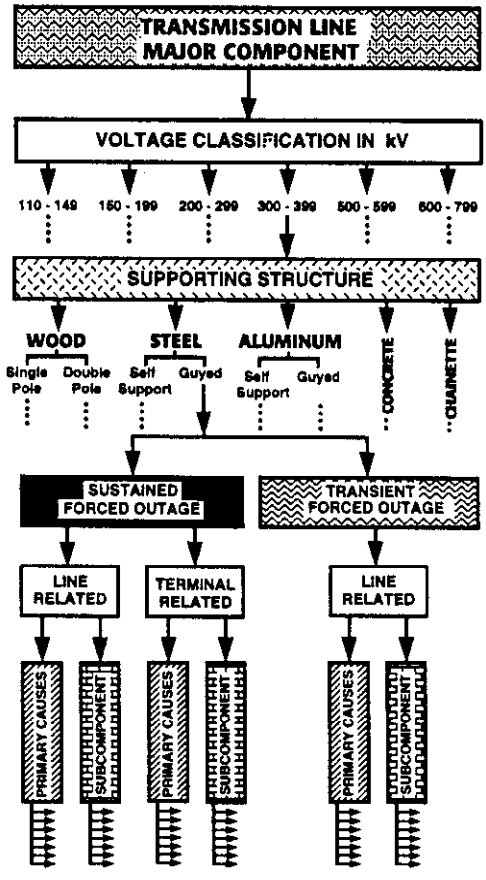


Fig. 1 Canadian Electrical Association transmission line data base structure

Historical transmission line forced outage statistics provide key answers to often posed questions:

1. What are the prime causes of transmission line forced outages?
2. Does the frequency of transmission line forced outages vary significantly with the supporting structure (e.g., wood, steel, etc.) and the operating voltage of a transmission line?
3. How long are transmission line sustained forced outages?
4. What is the weakest link of a transmission line? Is it the line conductors, line hardware, insulators, ground wires, its structure?

© 1994 IEEE





Copyright © 1998 IEEE. All rights reserved.

Table I below is a summary of the inventory at December 31, 1992 by voltage classification based on the data supplied by all utility contributors.

TABLE I
INVENTORY OF TRANSMISSION LINES
AS OF DECEMBER 31, 1992

| | VOLTAGE CLASS | | | | | |
|---|---|---|---|---|---|---|
| STATISTIC | 110 -149 | 150 -199 | 200 -299 | 300 -399 | 500 -599 | 600 - 799 |
| Length (km.) | 41,456 | 12,255 | 37,096 | 9,857 | 9,061 | 10,191 |
| Terminals | 2,057 | 167 | 1,125 | 271 | 221 | 331 |

## II TRANSMISSION LINE "LINE-RELATED" SUSTAINED FORCED OUTAGES

"A **sustained forced outage** refers to a transmission line-related forced outage, the duration of which is one minute or more. It does, therefore, not include automatic reclosing events" [2]. The percentage of transmission line "line-related' sustained forced outages stratified according to the primary cause of forced outages and voltage classification is shown in Figure 2. A summary of transmission line statistics for line-related sustained forced outages is shown in Table II.

The identification of the primary cause as adverse weather (i.e., lightning, rain, freezing rain, ice, snow, wind, high ambient temperature, low ambient temperature, freezing fog or frost, tornadoes) versus defective equipment requires some clarification[3]. "If it is known that equipment has failed as a consequence of adverse weather and that the weather conditions were within the design parameters of the failed equipment then the PRIMARY CAUSE CODE must be DEFECTIVE EQUIPMENT. And conversely, if the weather conditions were outside of the design parameters of the failed equipment (e.g., tornado) the PRIMARY CAUSE CODE must be ADVERSE WEATHER.

TABLE II
SUMMARY OF TRANSMISSION LINE STATISTICS FOR
LINE-RELATED SUSTAINED FORCED OUTAGES

| | VOLTAGE CLASS | | | | | |
|---|---|---|---|---|---|---|
| STATISTIC | 110 -149 | 150 -199 | 200 -299 | 300 -399 | 500 -599 | 600 - 799 |
| Kilometer Years (km.a) | 215,547 | 10,867 | 180,449 | 46,169 | 42,431 | 50,998 |
| Number of Outages | 2,849 | 73 | 992 | 133 | 263 | 91 |
| Total Time (h) | 22,231 | 619 | 12,171 | 2,799 | 6,291 | 557 |
| Frequency per 100 km.a | 1.3218 | 0.6718 | 0.5497 | 0.2881 | 0.6198 | 0.1784 |
| Mean Duration (h) | 7.8 | 8.5 | 12.3 | 21.0 | 23.9 | 6.1 |

For all voltage classes of transmission lines, **adverse weather** accounts for approximately 70% of sustained forced outages with the exception of the 600-799 kV voltage class. For the 600-799 kV voltage class, **adverse environment** accounts for a significant percentage of sustained transmission line outages (e.g., 32.96%).

Defective equipment and foreign interference account for another approximately 20 percent of the sustained forced outages while the remaining primary cause categories account for approximately 10% of the sustained forced outages. Adverse environment includes the following conditions: salt spray, industrial pollution, humidity, corrosion, vibration, fire and flooding. [3]

The frequency of transmission line "line-related" sustained forced outages classified by voltage class and supporting structure expressed in "outages per 100 km per year" is listed in Table III.

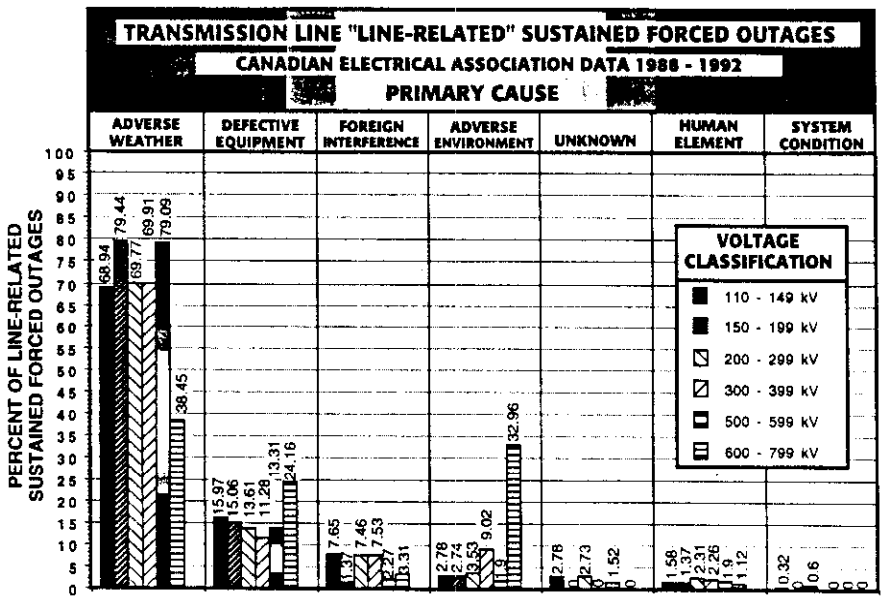


Fig. 2 Percent of transmission line "line-related" sustained forced outages stratified by primary cause and voltage class



Copyright © 1998 IEEE. All rights reserved.

TABLE III
FREQUENCY OF LINE-RELATED SUSTAINED FORCED OUTAGES CLASSIFIED BY VOLTAGE CLASS AND SUPPORTING STRUCTURE EXPRESSED IN "outages per 100 km per year"

| SUPPORTING STRUCTURE | VOLTAGE CLASS 110 -149 | 150 -199 | 200 -299 | 300 -399 | 500 -599 | 600 - 799 |
|---|---|---|---|---|---|---|
| WOOD SINGLE POLE | 0.9725 | - | - | - | - | - |
| WOOD DOUBLE POLE | 1.0543 | 0.8589 | 0.6147 | 0.0974 | - | - |
| STEEL SELF-SUPPORTING | 1.8976 | 0.3515 | 0.4565 | 0.3114 | 0.5765 | 0.2442 |
| STEEL GUYED | 1.8722 | - | 1.6193 | 0.2243 | 0.8399 | 0.0822 |
| ALUMINUM SELF-SUPPORTING | 1.3793 | - | 0.9205 | - | 0.5253 | - |
| ALUMINUM GUYED | - | - | 0.3727 | - | - | - |
| CHAINETTE | - | - | - | - | - | 0.1998 |
| ALL SUPPORTING STRUCTURES | 1.3218 | 0.6718 | 0.5497 | 0.2881 | 0.6198 | 0.1794 |

The frequency of transmission line outages is the number of outages divided by kilometer years which are in turn divided by 100. It is interesting to note the variance in the frequency of sustained forced outages with increasing voltage classes for a given support structure. The primary causes of sustained forced outages for each supporting structure tend to follow the distinctive statistical pattern shown in Figure 2. Detailed information on individual structures is presented in Reference 2.

The percentage of sustained transmission line line-related forced outages stratified according to the subcomponent which caused a forced outage is shown in Figure 3. The highest percentage of line-related sustained forced outages for all voltage classes is the "insulation system" subcomponent of a transmission line. It is important to note: the "insulation system (of a transmission line) includes the insulation by the atmosphere and/or by the insulators. Hardware is intended to comprise accessories associated with the line conductors but not with the ground wires" [3].

## III DURATION OF TRANSMISSION LINE LINE-RELATED SUSTAINED FORCED OUTAGES BY VOLTAGE CLASSIFICATION AND SUPPORTING STRUCTURE

The mean and median duration of line-related sustained transmission line forced outages classified by supporting structure and voltage class are listed in Table IV. Note the significant differences in the mean duration of sustained forced outages for a given supporting structure and for a given voltage class. The important point to not from Table IV is the significant variance between the mean and median line-related sustained forced outage duration levels. The mean value is particularly sensitive to lengthy forced outages which results in the mean value being significantly greater than the median value.

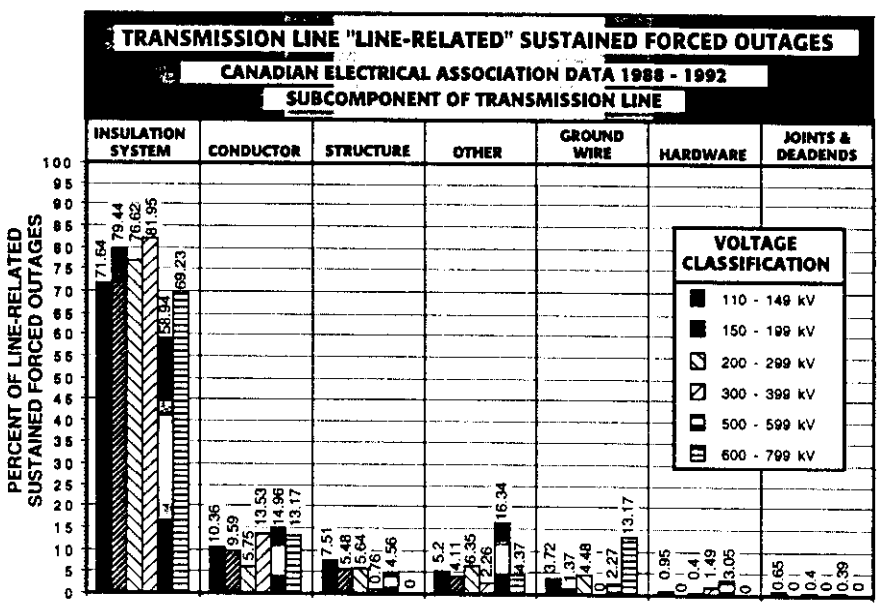


Fig. 3 Percent of transmission line "line-related" sustained forced outages stratified by subcomponent and voltage class



Copyright © 1998 IEEE. All rights reserved.

TABLE IV
THE MEAN AND MEDIAN DURATION OF LINE-RELATED SUSTAINED FORCED OUTAGES CLASSIFIED BY VOLTAGE CLASS AND SUPPORTING STRUCTURE EXPRESSED IN HOURS

| SUPPORTING STRUCTURE | VOLTAGE CLASS 110 -149 | 150 -199 | 200 -299 | 300 -399 | 500 -599 | 600 - 799 |
|---|---|---|---|---|---|---|
| WOOD SINGLE POLE | 10.8 (0.31) | - | - | - | - | - |
| WOOD DOUBLE POLE | 9.4 (0.10) | 4.0 (0.22) | 9.8 (0.12) | - | - | - |
| STEEL SELF-SUPPORTING | 6.1 (0.08) | 27.2 (0.16) | 11.7 (0.15) | 22.4 (0.21) | 14.5 (0.10) | 6.3 (0.05) |
| STEEL GUYED | 1.1 (0.05) | - | 19.1 (0.17) | 1.1 (0.21) | 42.4 (0.22) | 1.9 (0.15) |
| ALUMINUM SELF-SUPPORTING | 8.7 (2.26) | - | 43.7 (0.05) | - | 64.9 (0.79) | - |
| ALUMINUM GUYED | - | - | 7.4 (1.13) | - | - | - |
| CHAINETTE | - | - | - | - | - | 9.0 (0.24) |
| ALL SUPPORTING STRUCTURES | 7.8 (0.10) | 8.5 (0.22) | 1 2.3 (0.15) | 21.0 (0.20) | 23.9 (0.15) | 6.1 (0.08) |

NOTE: Values not enclosed in brackets represent the average value while those values enclosed in brackets represent the median duration of sustained forced outages.

## IV TRANSMISSION LINE "LINE-RELATED" TRANSIENT FORCED OUTAGES

A "transient forced outage refers to a transmission line forced outage the duration of which is less than one minute and is, therefore, recorded as zero. It covers only automatic recloser events". The actual duration of transmission line transient forced outages can be estimated from power line monitors but the process is prohibitively expensive and problematic since the duration of the transient forced outage is dependent upon the location of the power line monitor with respect to the origins of the transient forced outage. The percentage of transmission line line-related transient forced outages stratified according to the primary cause of forced outages and voltage classification is shown in Figure 4. A summary of transmission line statistics for line-related transient forced outages is shown in Table V.

TABLE V
SUMMARY OF TRANSMISSION LINE STATISTICS FOR LINE-RELATED TRANSIENT FORCED OUTAGES

| STATISTIC | VOLTAGE CLASS 110 -149 | 150 -199 | 200 -299 | 300 -399 | 500 -599 | 600 - 799 |
|---|---|---|---|---|---|---|
| Kilometer Years (km.a) | 215,547 | 10,867 | 180,449 | 46,169 | 42,431 | 50,998 |
| Number of Outages | 2,493 | 12 | 1,031 | 31 | 904 | 35 |
| Frequency per 100 km.a | 1.1566 | 0.1104 | 0.5714 | 0.0671 | 2.1305 | 0.0686 |

The percentage of transmission line "line-related" transient forced outages stratified by subcomponent and voltage class is shown in Figure 5. Similar to sustained forced outages, the insulation system of a transmission line accounts for approximately 90% of all transient forced outages for all transmission line voltage classes. Transmission line conductor and ground wire subcomponents represent a very small percent of the sustained forced outages.

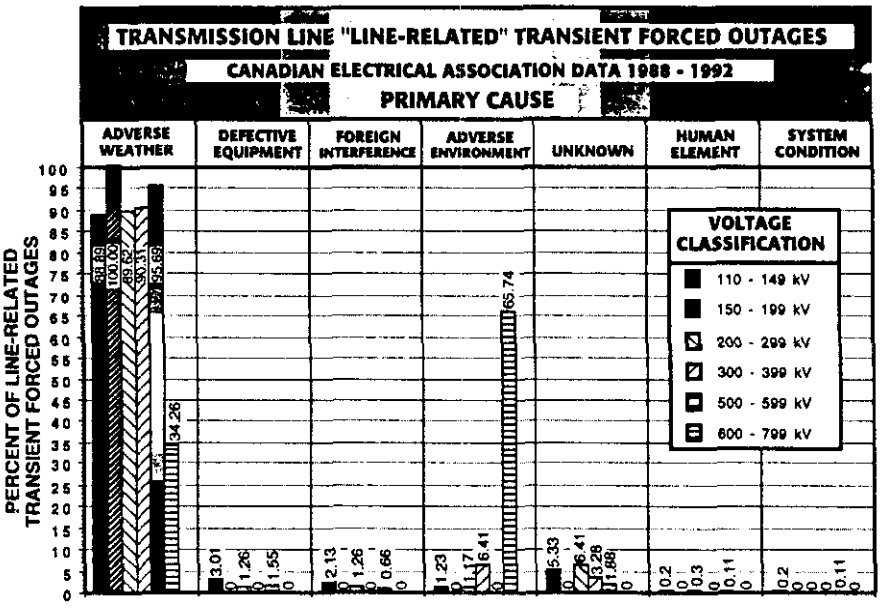


Fig. 4 Percent of transmission line "line-related" transient forced outages stratified by primary cause and voltage class



Copyright © 1998 IEEE. All rights reserved.

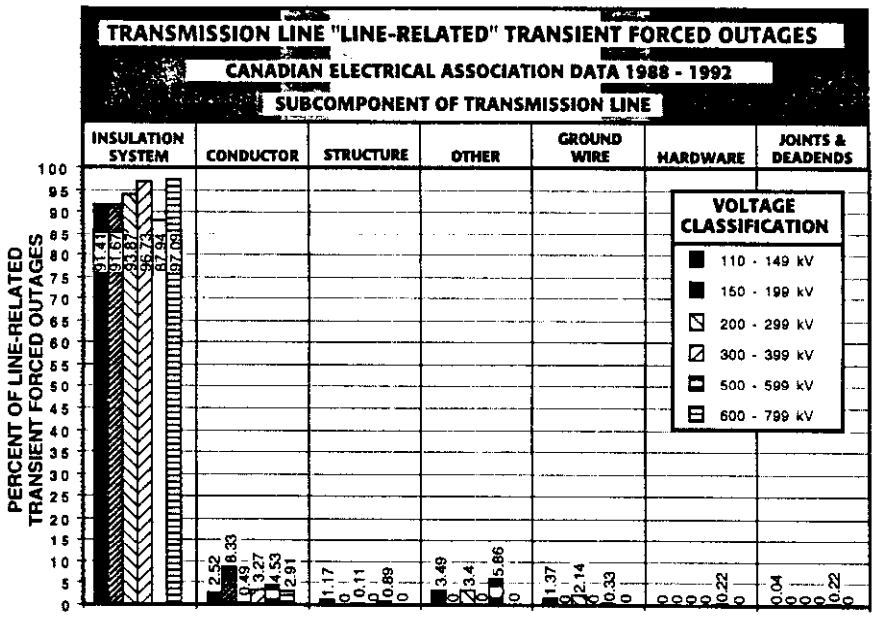


Fig. 5 Percent of transmission line "line-related" transient forced outages stratified by subcomponent and voltage class

The major primary cause of transient forced outages is "adverse weather which accounts for approximately 90 percent of all transient forced outages for all voltage classes except the 600-799 kV class where adverse weather is the dominant cause. The statistical pattern of primary causes of transient forced outages and sustained forced outages is similar.

The frequency of transmission line transient "line-related" forced outages classified by voltage class and supporting structure expressed in "outages per 100 km per year" is listed in Table VI. The frequency of transient forced outages varies significantly for a given supporting structure and for a given voltage class similar to Table III for sustained forced outages. Figure 6 reveals the frequency of transient and sustained forced outages for various voltage classes.

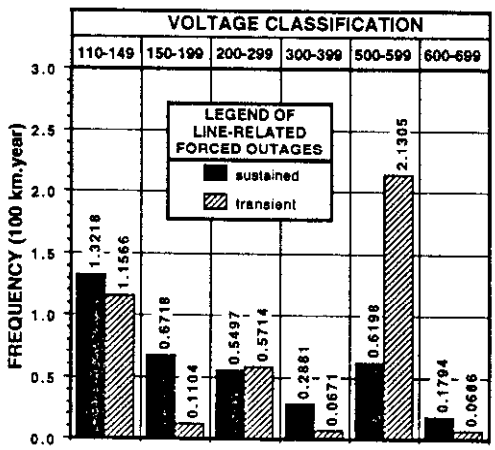


Fig. 6 Frequency of line-related sustained and transient forced outages of transmission lines by voltage classification

TABLE VI
FREQUENCY OF LINE-RELATED TRANSIENT FORCED OUTAGES CLASSIFIED BY VOLTAGE CLASS AND SUPPORTING STRUCTURE EXPRESSED IN "outages per 100 km per year"

| SUPPORTING STRUCTURE | VOLTAGE CLASS 110 -149 | 150 -199 | 200 -299 | 300 -399 | 500 -599 | 600 - 799 |
|---|---|---|---|---|---|---|
| WOOD SINGLE POLE | 1.2619 | - | - | - | - | - |
| WOOD DOUBLE POLE | 1.0495 | 0.1456 | 0.7073 | 0.0 | - | - |
| STEEL SELF-SUPPORTING | 1.2743 | 0.0502 | 0.5259 | 0.0764 | 2.0363 | 0.1390 |
| STEEL GUYED | 0.4309 | - | 0.2816 | 0.0408 | 2.8263 | 0.0110 |
| ALUMINUM SELF-SUPPORTING | - | - | 0.8368 | - | 1.3133 | - |
| ALUMINUM GUYED | 4.2912 | - | - | - | - | - |
| CONCRETE | 4.6875 | - | - | - | - | - |
| ALL SUPPORTING STRUCTURES | 1.1566 | 0.1104 | 0.5714 | 0.0671 | 2.1305 | 0.0686 |


Copyright © 1998 IEEE. All rights reserved.

## V TRANSMISSION LINE "TERMINAL-RELATED" FORCED OUTAGES

A summary of transmission line statistics for terminal-related sustained forced outages is shown in Table VII. It is important to note in Table VII the significant difference between the mean and median duration of terminal-related sustained force outages revealing the impact of lengthy outage duration levels on the mean value.

TABLE VII
SUMMARY OF TRANSMISSION LINE STATISTICS FOR TERMINAL-RELATED SUSTAINED FORCED OUTAGES

| | VOLTAGE CLASS | | | | | |
|---|---|---|---|---|---|---|
| STATISTIC | 110 -149 | 150 -199 | 200 -299 | 300 -399 | 500 -599 | 600 - 799 |
| Kilometer Years (km.a) | 9,583 | 627 | 5,263 | 1,147 | 606 | 539 |
| Number of Outages | 1,574 | 82 | 991 | 150 | 186 | 153 |
| Total Time (h) | 16,352 | 619 | 8,618 | 3,889 | 8,887 | 3,949 |
| Frequency per 100 km.a | 0.1642 | 0.1307 | 0.1883 | 0.1307 | 0.3069 | 0.2394 |
| Mean Duration (h) | 10.4 | 7.0 | 8.7 | 25.9 | 47.8 | 25.8 |
| Median Duration (h) | 0.05 | 0.30 | 0.22 | 0.37 | 0.64 | 1.70 |

The percent of transmission line "terminal-related" forced outages classified by their primary cause and voltage level is shown in Figure 7. Note that the statistical outage patterns of the primary causes of "terminal-related" forced outages is significantly different than "line-related" sustained and transient forced outages. Defective equipment for all voltage classes is the dominant cause of "terminal-related" forced outages. Damage equipment includes some of the following categories [2]:

- deterioration due to age
- incorrect manufacturing design
- incorrect manufacturing materials
- incorrect manufacturing assembly
- lack of maintenance

Research is required to investigate why defective equipment is the dominant cause for transmission terminal-related forced outages for all voltage categories and can the impact of equipment failures be reduced economically. Some of the following questions could be posed:

(1) Are the equipment reliability design levels too low and what are these levels set by the manufacture and utilities?

(2) Is the equipment subjected to rigorous compliance testing during commissioning prior to being accepted?

(3) Is the equipment maintained adequately?

(4) Is the equipment installed correctly in the field?

The "human element" is the second most dominant causes of forced outages while adverse weather is significantly less for all voltage classes with the exception of the 150-199 kV voltage class. The category "human element" includes some of the following issues[2]:

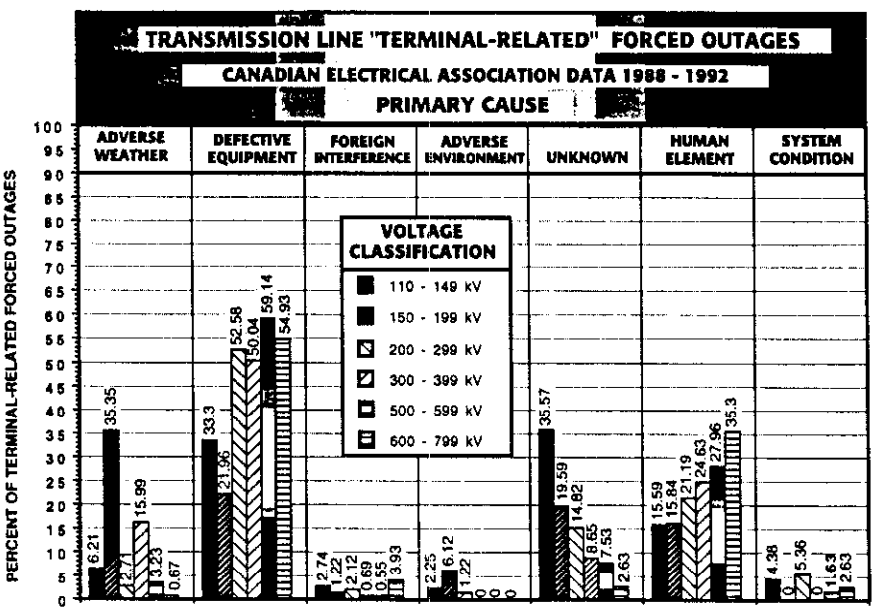


Fig. 7 Percent of transmission line "terminal-related" sustained forced outages stratified by primary cause and voltage class



Copyright © 1998 IEEE. All rights reserved.

- incorrect system records or diagrams
- incorrect use of equipment
- incorrect construction, installation or maintenance
- incorrect protection setting
- switching error
- testing
- incorrect circuit labelling
- deliberate or accidental damage by employees or utility contractors

Research is required to define why the human element is a significant primary cause. Questions concerning the adequacy of training and adaptation to new technologies can be posed.

The percent of transmission line "terminal-related" forced outages classified by their voltage class and subcomponents is shown in Figure 8. With reference to Figure 8, "control and protection equipment" account for the largest percent of known sustained forced outages for all voltage classes. Several questions can be posed on the dominance of "control and protection equipment" causing termnal-related forced outages. They are:

(1) Is the "new" technology a problem"?

(2) Are the setting too complex resulting in conflicting protection control decisions and subsequent failures?

(3) Is the control and protection equipment rigorously tested prior to installation and maintained adequately during its service life?

The "unknown" category was the largest factor for the lower voltage categories and significantly less at the upper voltage levels. For the 600-699 kV voltage class, the disconnect subcomponent was a significant factor. The disconnect and potential device subcomponents accounted for approximately 10 to 30 percent of terminal-related forced outages.

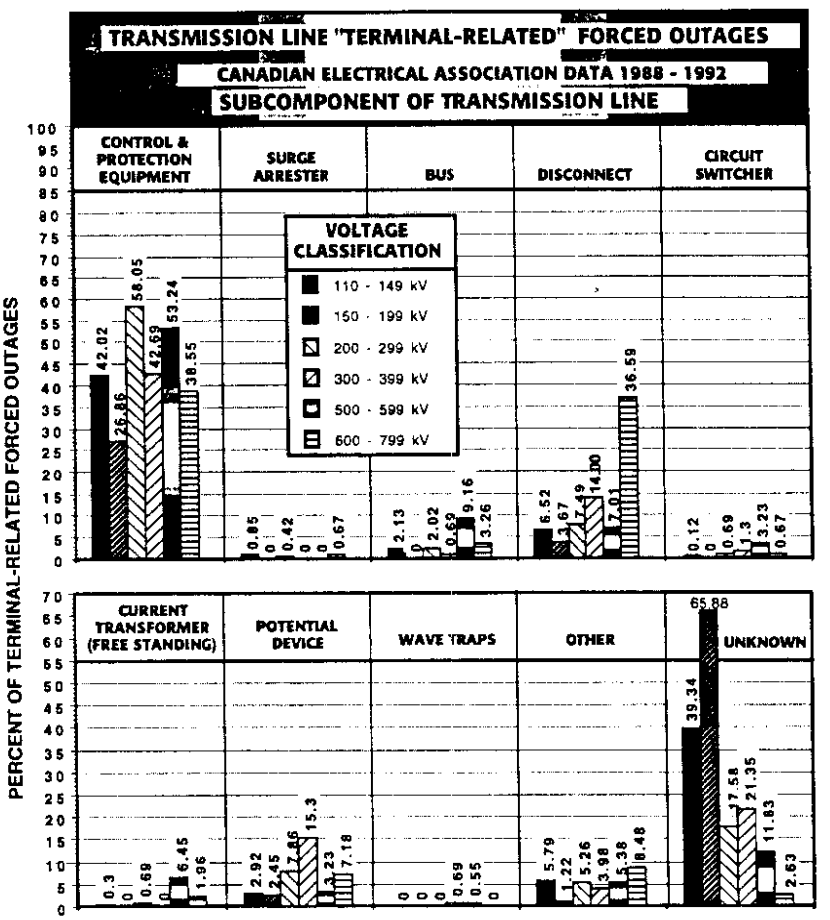


Fig. 8 Percent of transmission line "terminal-related" sustained forced outages stratified by subcomponent and voltage class

2207


Copyright © 1998 IEEE. All rights reserved.

## VI CONCLUSIONS

This paper has present a summary of the Canadian Electrical Association's transmission equipment statistics in graphical form to reveal the line-related and terminal-related forced outage performance characteristics of transmission lines. Detailed statistics on other major component of the transmission equipment (i.e., cable, transformer bank, circuit breaker, synchronous compensator, static compensator, shunt reactor bank, shunt capacitor bank and series capacitor bank) are beyond the scope of this paper but are contained in Reference 3.

The frequency and duration of transmission line forced outages classified by their supporting structures was presented to reveal the variance in the performance of different supporting structures (e.g., wood, steel, etc.) for various voltage levels and the possible variance in using a single index for a specific voltage class. The paper revealed the significant difference between the mean duration of transmission line forced outages and the median revealing the impact of lengthy transmission line outages on the mean value. For all voltage classifications, fifty percent of the time the duration of sustained forced outages was less than 15 minutes.

The primary cause of transmission line sustained forced outages was "adverse weather" and accounted for approximately 70% of the sustained forced outages. The insulation system subcomponent accounted for the largest percentage of sustained forced outages. These results provide the research base necessary to improve transmission line design characteristics. The primary cause and major subcomponent that resulted in transient forced outages were similar to the sustained forced outage characteristics (i.e., approximately 90% of the transient forced outages were caused by "adverse weather" and were attributed to the "insulation system".

The primary cause of transmission line "terminal-related" forced outages was "defective equipment" followed by "human element". The "control and protection equipment" accounted for the highest percentage of terminal-related forced outages.

These findings provide a knowledge base which is essential to analyse and evaluate the performance of transmission line with the objective of maximizing their reliability performance. For example, as transmission lines age how will these statistics change and at what point in time and at what level of performance degradation will it be necessary to replace these facilities?

A question often posed is: how good are those old transmission line surveys? Answer: they are pretty good, don't throw them away, they are required for trending analysis. The 1988-92 survey results were compared with the 1978-83 survey results for line-related and terminal-related forced outages. The same forced outage patterns were dominate in both surveys. A simple comparison is shown in Table VIII where it is clear that the variance is small for terminal-related forced outages while line-related forced outages the variance is significantly larger (i.e., note lower levels in the latest survey).

TABLE VIII
SUMMARY OF 1988-92 AND 1978-83 FREQUENCY OF LINE-RELATED AND TERMINAL RELATED FORCED OUTAGES

| | VOLTAGE CLASS | | | | | |
|---|---|---|---|---|---|---|
| | 110 | 150 | 200 | 300 | 500 | 600 |
| STATISTIC | -149 | -199 | -299 | -399 | -599 | - 799 |
| **Frequency of line-related forced outages (per 100 km year)** | | | | | | |
| (1998-92) | 1.3218 | 0.6718 | 0.5497 | 0.2881 | 0.6198 | 0.1784 |
| (1978-83) | 2.4942 | NA | 0.9096 | 0.4444 | 1.0036 | 0.3551 |
| **Frequency of terminal-related forced outages (per 100 km year)** | | | | | | |
| (1998-92) | 0.1642 | 0.1307 | 0.1883 | 0.1307 | 0.3069 | 0.2394 |
| (1978-83) | 0.1715 | NA | 0.2274 | 0.1596 | 0.2275 | 0.4895 |

## VII ACKNOWLEDGEMENTS

The author would like to thank the following members of the Canadian Electrical Association: Morel Oprisan, Edward M. Ezer and Raymond A. Del Bianco for their invaluable discussions and assistance in providing me with the CEA Equipment Reliability Information System reports on "Forced Outage Performance of Transmission Equipment and the Instruction Manuals for Reporting.

## VII REFERENCES

1. Recommended Practice for the Design of Reliable Industrial and Commercial Power Systems, IEEE Std. 493, (IEEE Gold Book).

2. Instruction Manual For Reporting Component Forced Outages of Transmission Equipment, Canadian Electrical Association, Suite 1600, One Westmount Square, Montreal, Quebec, H3Z 2P9.

3. Report: Forced Outage Performance of Transmission Equipment for the Period January 1, 1988 to December 31, 1992, Canadian Electrical Association, Suite 1600, One Westmount Square, Montreal, Quebec, H3Z 2P9.

4. An IEEE Survey on U.S. and Canadian Overhead Transmission Outages at 250kV and Above, Data Analysis Task Force, Working Group on Statistics of Line Outages, General Systems Subcommittee, Transmission & Distribution committee, IEEE Transactions on Power Delivery, vol. 9, No. 1, January 1994, pp. 21-39.

5. IEEE Task Force on Line Design Characteristics, Working group on statistics of Line Outages, "An IEEE Survey of Transmission Line Population and Design Characteristics:, IEEE Transactions on Power Delivery, Vol. 6, pp. 1934-45, October, 1991.

6. IEEE Standard Terms for Reporting and Analyzing Outage Occurrences and Outage States of Electrical Transmission Facilities, IEEE Std. 859-1987.

7. IEEE Task Force on the Requirements for the Survey of Line Outage Data, "IEEE AT&D Working Group on Statistics of Line Outages:Background, Status and Prospects:, Proceeding of the 14th INTER-RAM Conference for the Electric Power Industry, Toronto, Ontario, pp. 255-262, May 26-29, 1987.

8. Baribeau, M.A., Driscoll, C.T. and McGillis, D. "The Canadian Electrical Association's Equipment Reliability Information System", Proceedings of the Third International Conference on Reliability of Power Supply Systems, IEC conference Publication No. 225, September 19-21, 1983, London, UK, pp. 150-154.

9. Baribeau, M.A., McGillis, D., "Analysis of Transmission Equipment Performance Based on the CEA System", Canadian Society for Electrical Engineering, May, 1984 Conference, Halifax, Nova Scotia.

10. "Predicting Transmission Outages for System Reliability Evaluations", Electric Power Research Institute, EPRI-3880, Project 1468-2, May, 1985,

11. Lauby, M.G., Khu, K.T., Polesky, R.W., Vandello, R.E., Doudna, J.H., Lehlman, P.J., Elempel, D.D., "MAPP Bulk Transmission Outage Data and Collection", Transactions on Power Apparatus and Systems, Vol., PAS-103, Jan. 1984, pp. 213-221.

12. Lauby, M.G., Ludorf, R.P., Doudna, J.H., Klempel, D.D., Lehman, P.J., Dahl, C.G., "Analysis of Pooling 345kV Bulk Transmission Outage Data Between the Mid-Continent Area Power Pool and Northeast Utilities, Trans, Transactions on Power Apparatus and Systems, Vol., PAS-104, Sept. 1985, pp. 2427-2434.

13. Lauby, M.G.,Doudna, J.H., Polesky, r.w., Lehman, P.J., Klempel, D.D., "Effects of Pooling Weather Associated MAPP ABulk Transmission Outage Data on Calculated Forced Outage Rates", Transactions on Power Apparatus and Systems, Vol., PAS-103, Aug. 1984, pp.2345-2351.

14. Patton, A.D., "Determination and Analysis of Data for Reliability Studies", IEEE Transactions of Power Apparatus and Systems, Vol. PAS-87, Jan. 1968., pp. 84-100.

15. Ringlee, R.J., "Techniques for Pooling Outage Data", Pennsylvania Electric Association (PEA), System Planning Committee Fall Meeting, Sharon, P.A., October, 1967.



Copyright © 1998 IEEE. All rights reserved.

# Transmission Equipment Reliability Data from Canadian Electrical Association

Don O. Koval, *Fellow, IEEE*

*Abstract*—Frequent forced outages of transmission equipment can significantly affect the performance of industrial and commercial power systems and the processes they control. Historical transmission reliability data provides the ability to predict the performance of various transmission line configurations and assess the economic impact of forced outages on industrial and commercial power systems. The prediction methodologies are presented in IEEE Std. 493 (i.e., IEEE Gold Book) [1]. This paper will present a summary of the Canadian Electrical Association's Equipment Reliability Information System [2], [3] statistics on the forced outage performance characteristics of transmission equipment (i.e., transformers, circuit breakers, cables, etc.) for Canadian utilities for the period 1988–1992. The paper will reveal the structure of the data base and present relevant summary data (i.e., the frequency and duration of forced outages) necessary for the application of these reliability methodologies. A knowledge of the primary causes of the major equipment forced outages as to whether the outages are primarily due to the subcomponents of the major equipment or to its terminal equipment is essential for designing, operating and maintaining a reliable transmission system. This paper will discuss and identify for each major equipment the primary subcomponent (e.g., transformer windings) and the terminal equipment (e.g., auxiliary equipment) which dominated the forced outage statistics of the major equipment for the five year period.

*Index Terms*—Transmission, equipment, reliability, CEA, failure.

## I. Introduction

"In 1975, the Canadian Electrical Association (CEA) adopted a proposal to create a facility for centralized collection, processing and reporting of reliability and outage statistics for electrical generation, transmission and distribution equipment. To coordinate the development of this Equipment Reliability Information System CEA constituted the Consultative Committee on Outage Statistics. In 1978, the transmission stage of the information system was implemented when Canadian utilities began supplying data on transmission equipment in accordance with the Instruction Manual for Reporting Component Forced Outages of Transmission Equipment" [2].

The performance of transmission lines can be viewed from many different perspectives. To understand the variance in these perspectives, it is necessary to define the data base structure of transmission line performance data. The structure for the CEA transmission equipment forced outage data base is illustrated in Fig. 1.

With reference to Fig. 1, the frequency and duration of major equipment forced outages for each major component presented in this paper will be stratified by voltage classification which will further be divided into two categories, namely;

1) All integral subcomponents of the major equipment
2) All terminal equipment of the major equipment.

For each major component, the dominant subcomponent(s) (e.g., on-load tap changer) and dominant major equipment terminal failures (e.g., control and protection equipment) will be presented. A presentation of all the other subcomponent and terminal equipment failure statistics is beyond the scope of this paper but can be obtain in [3]. Two reliability indices are presented for the duration of equipment forced outages, namely, the mean and mediam. For the majority of transmission system equipment forced outages, there is a significant difference between the mean and the mediam indicating the skewness of the underlying distributions and the sensitivity of the mean to lengthy outages. Given the frequency and duration of forced transmission equipment outage statistics, the reliability methodologies presented in IEEE Std. 493 (i.e., IEEE Gold Book) can be used to predict the performance of transmission system operating configurations and assess their impact on industrial and commercial facilities.

Historical transmission system equipment forced outage statistics provide key answers to often posed questions:

1) What are the prime causes of transmission system equipment forced outages?
2) Does the frequency of transmission system equipment forced outages vary significantly between its internal subcomponent and its associated terminal equipment?
3) How long are transmission system equipment forced outages?
4) What are the dominant subcomponent and terminal equipment outages which significantly degrade the performance of a major piece of transmission system equipment?

## II. Transformer Banks

In the Canadian Electrical Association's (CEA) "Equipment Reliability Information System," two types of transformer banks are considered, namely "one three phase element" and "three single-phase elements." The subcomponents of these transformer bank is divided into the following components:

1) Bushing (Including CT's).

Paper ICPSD 95-15, approved by the Power Systems Engineering Committee of the IEEE Industry Applications Society for presentation at the 1995 Industrial & Commercial Power Systems Technical Conference, San Antonio, TX, May 7-11. Manuscript released for publication May 23, 1996.

The author is with the Department of Electrical Engineering, University of Alberta Edmonton, Alta., Canada T6G 2G7.

Publisher Item Identifier S 0093-9994(96)07224-6.

© 1996 IEEE



Copyright © 1998 IEEE. All rights reserved.

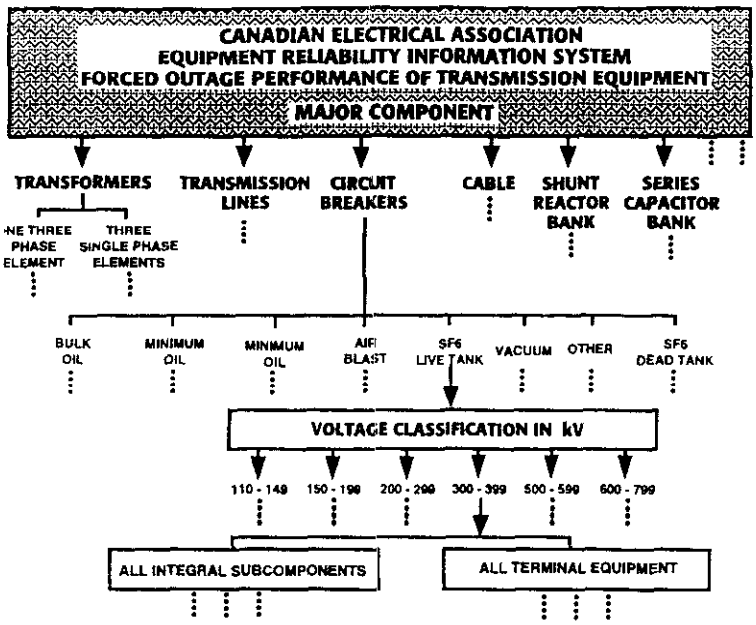


Fig. 1. Canadian Electrical Association transmission equipment data base structure.

2) Windings.
3) Core.
4) Leads.
5) Cooling Equipment.
6) Auxiliary Equipment.
7) Other.

The identified terminal equipment categories for transformers are:

1) Control and Protection Equipment.
2) Surge Arrester.
3) Bus.
4) Disconnect.
5) Circuit Switcher.
6) Current Transformer (Free Standing).
7) Potential Devices.
8) Motor-Operated Ground Switch.
9) Other.
10) Unknown.

The frequency and duration of all integral subcomponents and all terminal equipment forced outages for **one three phase element transformer banks** are listed in Table I.

The dominant known cause(s) of **subcomponent** forced outages for *single three phase transformer banks* for each voltage class and their percentage of the total frequency of subcomponent forced outages are:

| | | |
|---|---|---|
| 110–149 kV | On-load Tap Changer | 28.33% |
| 150–199 kV | Auxiliary Equipment | 44.40% |
| 200–299 kV | On-load Tap Changer | 33.13% |
| 300–399 kV | On-load Tap Changer | 25.00% |
| 110–149 kV | On-load Tap Changer | 21.10% |
| 150–199 kV | Auxiliary Equipment | 39.33% |
| 200–299 kV | Cooling Equipment | 15.91% |
| 300–399 kV | On-load Tap Changer | 26.32% |
| 500–599 kV | Cooling Equipment | 22.22% |
| 600–799 kV | Windings | 26.67% |
| | Bushings (including C.T.,'s) | 20.00% |
| | Cooling Equipment | 20.00% |
| 110–149 kV | On-load Tap Changer | 28.33% |
| 500–599 kV | On-load Tap Changer | 33.33% |
| | Windings | 25.00% |
| 600–799 kV | Cooling Equipment | 26.51% |

The dominant known cause(s) of **{terminal equipment** forced outages for *single three phase transformer banks* for each voltage class and their percentage of the total frequency of terminal equipment forced outages are:

| | | |
|---|---|---|
| 110–149 kV | Control & Protection Equipment | 42.06% |
| 150–199 kV | Control & Protection Equipment | 75.00% |
| 200–299 kV | Control & Protection Equipment | 42.37% |
| 300–399 kV | Control & Protection Equipment | 55.55% |
| 500–599 kV | Control & Protection Equipment | 37.04% |
| 600–799 kV | Control & Protection Equipment | 50.00% |

The frequency and duration of all integral subcomponents and all terminal equipment forced outages for **three single—phase element transformer banks** are listed in Table II.

The dominant known cause(s) of subcomponent forced outages for *three single-phase transformer banks* for each voltage class and their percentage of the total frequency of subcomponent forced outages are:

Copyright © 1998 IEEE. All rights reserved.

TABLE I
FREQUENCY AND DURATION OF ALL INTEGRAL SUBCOMPONENTS AND ALL TERMINAL EQUIPMENT
FORCED OUTAGES TRANSFORMER BANK ONE THREE PHASE ELEMENT (1988-1992)

| | ALL INTEGRAL SUBCOMPONENTS | | | ALL TERMINAL EQUIPMENT | | |
|---|---|---|---|---|---|---|
| VOLTAGE CLASS | FREQUENCY occurrences per year | MEAN DURATION (hours) | MEDIAN DURATION (hours) | FREQUENCY occurrences per year | MEAN DURATION (hours) | MEDIAN DURATION (hours) |
| 110 - 149 kV | 0.0330 | 509.4 | 13.88 | 0.0936 | 28.0 | 3.85 |
| 150 - 199 kV | 0.0510 | 1.3 | 0.72 | 0.0227 | 52.3 | 19.49 |
| 200 - 299 kV | 0.0389 | 311.1 | 18.81 | 0.1136 | 35.7 | 5.98 |
| 300 - 399 kV | 0.0291 | 745.6 | 15.13 | 0.0491 | 27.2 | 8.03 |
| 500 - 599 kV | 0.0587 | 2,204.3 | 80.84 | 0.1320 | 11.0 | 4.47 |
| 600 - 799 kV | 0.1058 | 1,458.7 | 8.42 | 0.0772 | 76.2 | 9.10 |

TABLE II
FREQUENCY AND DURATION OF ALL INTEGRAL SUBCOMPONENTS AND ALL TERMINAL EQUIPMENT
FORCED OUTAGES TRANSFORMER BANK THREE SINGLE PHASE ELEMENTS (1988-1992)

| | ALL INTEGRAL SUBCOMPONENTS | | | ALL TERMINAL EQUIPMENT | | |
|---|---|---|---|---|---|---|
| VOLTAGE CLASS | FREQUENCY occurrences per year | MEAN DURATION (hours) | MEDIAN DURATION (hours) | FREQUENCY occurrences per year | MEAN DURATION (hours) | MEDIAN DURATION (hours) |
| 110 - 149 kV | 0.0372 | 173.2 | 13.72 | 0.0512 | 50.9 | 7.08 |
| 150 - 199 kV | 0.1632 | 91.6 | 3.12 | 0.0715 | 47.5 | 1.67 |
| 200 - 299 kV | 0.0422 | 62.2 | 5.43 | 0.0498 | 36.9 | 1.72 |
| 300 - 399 kV | 0.0886 | 426.8 | 7.07 | 0.0466 | 46.9 | 2.60 |
| 500 - 599 kV | 0.0327 | 146.4 | 15.48 | 0.0738 | 18.0 | 1.92 |
| 600 - 799 kV | 0.0560 | 1,550.0 | 37.07 | 0.0485 | 1,157.1 | 8.05 |

TABLE III
FREQUENCY AND DURATION OF ALL INTEGRAL SUBCOMPONENTS AND ALL TERMINAL EQUIPMENT FORCED OUTAGES CIRCUIT BREAKERS110-149 kV (1988-1992)

| | ALL INTEGRAL SUBCOMPONENTS | | | ALL TERMINAL EQUIPMENT | | |
|---|---|---|---|---|---|---|
| INTERRUPTING MEDIUM | FREQUENCY occurrences per year | MEAN DURATION (hours) | MEDIAN DURATION (hours) | FREQUENCY occurrences per year | MEAN DURATION (hours) | MEDIAN DURATION (hours) |
| BULK OIL | 0.0311 | 165.8 | 14.87 | 0.0522 | 20.5 | 2.27 |
| MINIMUM OIL | 0.0216 | 466.0 | 24.94 | 0.0339 | 31.9 | 0.17 |
| AIR BLAST | 0.0402 | 171.7 | 21.38 | 0.0476 | 116.4 | 0.13 |
| SF6 LIVE TANK | 0.0251 | 93.0 | 4.94 | 0.0474 | 121.0 | 0.28 |
| VACUUM | - | - | - | - | - | - |
| OTHER | - | - | - | - | - | - |
| SF6 DEAD TANK | 0.2366 | 84.2 | 24.50 | 0.2340 | 72.7 | 8.69 |

The dominant known cause(s) of terminal equipment forced outages for *three single-phase transformer banks* for each voltage class and their percentage of the total frequency of terminal equipment forced outages are:

| | | |
|---|---|---|
| 110-149 kV | Control & Protection Equipment | 31.33% |
| 150-199 kV | Control & Protection Equipment | 41.16% |
| 200-299 kV | Control & Protection Equipment | 61.54% |
| 300-399 kV | Control & Protection Equipment | 60.00% |
| 500-599 kV | Control & Protection Equipment | 55.74% |
| 600-799 kV | Control & Protection Equipment | 46.15% |

## III. CIRCUIT BREAKERS

In the Canadian Electrical Association's (CEA) "Equipment Reliability Information System," the following types of circuit breakers are considered:

1) Bulk Oil.
2) Minimum Oil.
3) Air Blast.
4) SF6-Live Tank.
5) Vacuum.
6) Other.
7) SF6-Dead Tank.


Copyright © 1998 IEEE. All rights reserved.

TABLE IV
FREQUENCY AND DURATION OF ALL INTEGRAL SUBCOMPONENTS AND ALL TERMINAL EQUIPMENT FORCED OUTAGES CIRCUIT BREAKERS 150–199 kV (1988–1992)

| | ALL INTEGRAL SUBCOMPONENTS | | | ALL TERMINAL EQUIPMENT | | |
|---|---|---|---|---|---|---|
| INTERRUPTING MEDIUM | FREQUENCY occurrences per year | MEAN DURATION (hours) | MEDIAN DURATION (hours) | FREQUENCY occurrences per year | MEAN DURATION (hours) | MEDIAN DURATION (hours) |
| BULK OIL | 0.0760 | 41.8 | 1.38 | 0.0760 | 5.6 | 0.67 |
| MINIMUM OIL | 0.0295 | 107.9 | 9.90 | 0.0349 | 7.3 | 0.69 |
| AIR BLAST | 0.0284 | 83.5 | 13.82 | 0.0481 | 307.9 | 3.10 |
| SF6 LIVE TANK | - | - | - | - | - | - |
| SF6 DEAD TANK | 0.0289 | 45.2 | 50.71 | 0.0289 | 15.0 | 14.6 |

TABLE V
FREQUENCY AND DURATION OF ALL INTEGRAL SUBCOMPONENTS AND ALL TERMINAL EQUIPMENT FORCED OUTAGES CIRCUIT BREAKERS 200–299 kV (1988–1992)

| | ALL INTEGRAL SUBCOMPONENTS | | | ALL TERMINAL EQUIPMENT | | |
|---|---|---|---|---|---|---|
| INTERRUPTING MEDIUM | FREQUENCY occurrences per year | MEAN DURATION (hours) | MEDIAN DURATION (hours) | FREQUENCY occurrences per year | MEAN DURATION (hours) | MEDIAN DURATION (hours) |
| BULK OIL | 0.0561 | 228.2 | 5.53 | 0.1121 | 25.2 | 2.41 |
| MINIMUM OIL | 0.0582 | 265.8 | 8.00 | 0.0678 | 62.3 | 0.96 |
| AIR BLAST | 0.1056 | 99.2 | 6.95 | 0.1300 | 94.5 | 4.13 |
| SF6 LIVE TANK | 0.0172 | 42.5 | 4.50 | 0.0438 | 8.3 | 0.30 |
| VACUUM | - | - | - | - | - | - |
| OTHER | 0.0118 | 4,490.2 | 4,490.20 | 0.0235 | 10.31 | 0.27 |
| SF6 DEAD TANK | 0.0741 | 105.5 | 12.96 | 0.1209 | 19.4 | 4.00 |

The subcomponents of each type of circuit breaker are divided into the following components:

1) Bushing (Including C.T.'s).
2) Operating Mechanisms.
3) Interrupters.
4) Insulation System (Support Insulators).
5) Resistors or Grading Capacitors.
6) Interrupting Medium.
7) Auxiliary Equipment.
8) Other.

The identified terminal equipment categories for each type of circuit breaker are:

1) Control and Protection Equipment.
2) Surge Arrester.
3) Bus.
4) Disconnect.
5) Circuit Switcher.
6) Current Transformer (Free Standing).
7) Potential Devices.
8) Other.
9) Unknown.

The frequency and duration of all integral subcomponents and all terminal equipment forced outages of each type of circuit breaker for each voltage class are listed in Tables III–IX, respectively.

The dominant known cause(s) of **subcomponent equipment** forced outages for **110–149 kV circuit breakers** and the percentage of the total frequency of subcomponent forced outages are:

| | |
|---|---|
| Operating Mechanisms | 42.74% |
| Auxiliary Equipment | 18.45% |

The dominant known cause(s) of **terminal equipment** forced outages for **110–149 kV circuit breakers** and the percentage of the total frequency of terminal equipment forced outages are:

| | |
|---|---|
| Control and Protection Equipment | 60.59% |

The dominant known cause(s) of **subcomponent equipment** forced outages for **150–199 kV circuit breakers** and the percentage of the total frequency of subcomponent forced outages are:

| | |
|---|---|
| Bushings | 20.00% |
| Auxiliary Equipment | 18.45% |

The dominant known cause(s) of **terminal equipment** forced outages for **150–199 kV circuit breakers** and the

Copyright © 1998 IEEE. All rights reserved.

TABLE VI
FREQUENCY AND DURATION OF ALL INTEGRAL SUBCOMPONENTS AND ALL TERMINAL EQUIPMENT FORCED OUTAGES CIRCUIT BREAKERS 300–399 kV (1988–1992)

| | ALL INTEGRAL SUBCOMPONENTS | | | ALL TERMINAL EQUIPMENT | | |
|---|---|---|---|---|---|---|
| INTERRUPTING MEDIUM | FREQUENCY occurrences per year | MEAN DURATION (hours) | MEDIAN DURATION (hours) | FREQUENCY occurrences per year | MEAN DURATION (hours) | MEDIAN DURATION (hours) |
| BULK OIL | 0.1000 | 20.4 | 20.43 | - | - | - |
| MINIMUM OIL | 0.0116 | 429.7 | 28.25 | 0.0466 | 274.6 | 5.45 |
| AIR BLAST | 0.0845 | 189.3 | 34.60 | 0.0513 | 88.2 | 0.95 |
| SF6 LIVE TANK | 0.0132 | 119.5 | 119.48 | 0.0658 | 3.7 | 0.63 |
| SF6 DEAD TANK | 0.1141 | 265.0 | 21.45 | 0.0552 | 22.6 | 2.74 |

TABLE VII
FREQUENCY AND DURATION OF ALL INTEGRAL SUBCOMPONENTS AND ALL TERMINAL EQUIPMENT FORCED OUTAGES CIRCUIT BREAKERS 500–599 kV (1988–1992)

| | ALL INTEGRAL SUBCOMPONENTS | | | ALL TERMINAL EQUIPMENT | | |
|---|---|---|---|---|---|---|
| INTERRUPTING MEDIUM | FREQUENCY occurrences per year | MEAN DURATION (hours) | MEDIAN DURATION (hours) | FREQUENCY occurrences per year | MEAN DURATION (hours) | MEDIAN DURATION (hours) |
| BULK OIL | 0.0500 | 715.9 | 715.87 | - | - | - |
| MINIMUM OIL | - | - | - | - | - | - |
| AIR BLAST | 0.0849 | 106.1 | 15.55 | 0.1297 | 65.4 | 4.81 |
| SF6 LIVE TANK | - | - | - | 0.6500 | 3.8 | 1.73 |
| OTHER | - | - | - | 0.2500 | 96.3 | 96.32 |
| SF6 DEAD TANK | 0.1002 | 121.4 | 3.55 | 0.2246 | 218.3 | 7.27 |

TABLE VIII
FREQUENCY AND DURATION OF ALL INTEGRAL SUBCOMPONENTS AND ALL TERMINAL EQUIPMENT FORCED OUTAGES CIRCUIT BREAKERS 600–699 kV (1988–1992)

| | ALL INTEGRAL SUBCOMPONENTS | | | ALL TERMINAL EQUIPMENT | | |
|---|---|---|---|---|---|---|
| INTERRUPTING MEDIUM | FREQUENCY occurrences per year | MEAN DURATION (hours) | MEDIAN DURATION (hours) | FREQUENCY occurrences per year | MEAN DURATION (hours) | MEDIAN DURATION (hours) |
| MINIMUM OIL | - | - | - | - | - | - |
| AIR BLAST | 0.2388 | 318.9 | 22.28 | 0.1202 | 187.7 | 6.17 |
| SF6 DEAD TANK | 0.3158 | 38.3 | 21.32 | 0.0526 | 722.3 | 722.27 |

| | ALL INTEGRAL SUBCOMPONENTS | | | ALL TERMINAL EQUIPMENT | | |
|---|---|---|---|---|---|---|
| INTERRUPTING MEDIUM | FREQUENCY occurrences per year | MEAN DURATION (hours) | MEDIAN DURATION (hours) | FREQUENCY occurrences per year | MEAN DURATION (hours) | MEDIAN DURATION (hours) |
| MINIMUM OIL | - | - | - | - | - | - |
| AIR BLAST | 0.2388 | 318.9 | 22.28 | 0.1202 | 187.7 | 6.17 |
| SF6 DEAD TANK | 0.3158 | 38.3 | 21.32 | 0.0526 | 722.3 | 722.27 |

percentage of the total frequency of terminal equipment forced outages are:

| | |
|---|---|
| Control and Protection Equipment | 17.65% |
| Disconnect | 20.00% |

The dominant known cause(s) of **subcomponent equipment** forced outages for **200–299 kV circuit breakers** and the percentage of the total frequency of subcomponent forced outages are:


Copyright © 1998 IEEE. All rights reserved.

TABLE IX
FREQUENCY AND DURATION OF ALL INTEGRAL SUBCOMPONENTS AND ALL TERMINAL EQUIPMENT FORCED OUTAGES CIRCUIT BREAKERS (1988–1992)

| | ALL INTEGRAL SUBCOMPONENTS | | | ALL TERMINAL EQUIPMENT | | |
|---|---|---|---|---|---|---|
| VOLTAGE CLASS | FREQUENCY occurrences per year | MEAN DURATION (hours) | MEDIAN DURATION (hours) | FREQUENCY occurrences per year | MEAN DURATION (hours) | MEDIAN DURATION (hours) |
| 110 - 149 kV | 0.0344 | 187.4 | 18.35 | 0.0513 | 38.9 | 1.20 |
| 150 - 199 kV | 0.0339 | 79.1 | 6.17 | 0.0443 | 145.2 | 1.88 |
| 200 - 299 kV | 0.0738 | 156.1 | 7.37 | 0.1053 | 60.2 | 2.70 |
| 300 - 399 kV | 0.0752 | 199.5 | 33.91 | 0.0595 | 100.9 | 0.98 |
| 500 - 599 kV | 0.0814 | 116.6 | 8.20 | 0.1521 | 118.6 | 5.99 |
| 600 - 799 kV | 0.2354 | 1315.4 | 22.28 | 0.1174 | 190.0 | 6.17 |

| | |
|---|---|
| Operating Mechanisms | 36.50% |
| Interrupting Medium | 23.99% |

The dominant known cause(s) of **terminal equipment** forced outages for **200–299 kV circuit breakers** and the percentage of the total frequency of terminal equipment forced outages are:

| | |
|---|---|
| Control and Protection Equipment | 67.89% |
| Bus | 13.71% |

The dominant known cause(s) of **{subcomponent equipment** forced outages for **{300–399 kV circuit breakers** and the percentage of the total frequency of subcomponent forced outages are:

| | |
|---|---|
| Operating Mechanisms | 48.80% |
| Interrupting Medium | 32.20% |

The dominant known cause(s) of **{terminal equipment** forced outages for **{300–399 kV circuit breakers** and the percentage of the total frequency of terminal equipment forced outages are:

| | |
|---|---|
| Control and Protection Equipment | 62.12% |

The dominant known cause(s) of **{subcomponent equipment** forced outages for **{500–599 kV circuit breakers** and the percentage of the total frequency of subcomponent forced outages are:

| | |
|---|---|
| Operating Mechanisms | 57.55% |

The dominant known cause(s) of **terminal equipment** forced outages for **500–599 kV circuit breakers** and the percentage of the total frequency of terminal equipment forced outages are:

| | |
|---|---|
| Control and Protection Equipment | 63.63% |
| Bus | 22.73% |

The dominant known cause(s) of **{subcomponent equipment** forced outages for **{600–699 kV circuit breakers** and the percentage of the total frequency of subcomponent forced outages are:

| | |
|---|---|
| Operating Mechanisms | 51.99% |
| Interrupting Medium | 22.73% |

The dominant known cause(s) of **{terminal equipment** forced outages for **{600–699 kV circuit breakers** and the percentage of the total frequency of terminal equipment forced outages are:

| | |
|---|---|
| Control and Protection Equipment | 40.34% |
| Disconnect | 28.57% |

### IV. CABLES

In the Canadian Electrical Association's (CEA) "Equipment Reliability Information System," the subcomponents of cable related forced outages are divided into the following subcomponents:

1) Pothead.
2) Joints.
3) Conductor.
4) Insulation System.
5) Auxiliary Equipment.
6) Other.

The identified terminal equipment categories for cable related forced outages are:

1) Control and Protection Equipment.
2) Surge Arrester.
3) Bus.
4) Disconnect.
5) Circuit Switcher.
6) Current Transformer (Free Standing).
7) Potential Devices.
8) Other.
9) Unknown.

The terminal equipment categories for cable related forced outages is identical to circuit breakers.

The frequency and duration of cable related forced outages for each voltage class is shown in Table X.

The dominant known cause(s) of **{subcomponent** forced outages for *cable related forced outages* for each voltage class

Copyright © 1998 IEEE. All rights reserved.

TABLE X
FREQUENCY AND DURATION OF ALL INTEGRAL SUBCOMPONENTS AND ALL TERMINAL EQUIPMENT FORCED OUTAGES CABLE (1988-1992)

| | CABLE-RELATED FORCED OUTAGES | | | TERMINAL RELATED FORCED OUTAGES | | |
|---|---|---|---|---|---|---|
| VOLTAGE CLASS | FREQUENCY per 100 km per year | MEAN DURATION (hours) | MEDIAN DURATION (hours) | FREQUENCY per 100 km per year | MEAN DURATION (hours) | MEDIAN DURATION (hours) |
| 110 - 149 kV | 3.1884 | 39.3 | 3.28 | 0.1897 | 20.3 | 1.26 |
| 150 - 199 kV | 0.0 | 0.0 | 0.0 | 0.0 | 0.0 | 0.0 |
| 200 - 299 kV | 0.6803 | 176.5 | 8.15 | 0.0101 | 0.1 | 0.06 |
| 300 - 399 kV | 13.3333 | 17.5 | 17.52 | 0.0 | 0.0 | 0.0 |
| 500 - 599 kV | 0.2632 | 2.8 | 2.82 | 0.2000 | 22.6 | 2.00 |

TABLE XI
FREQUENCY AND DURATION OF ALL INTEGRAL SUBCOMPONENTS AND ALL TERMINAL EQUIPMENT FORCED OUTAGES SHUNT REACTOR BANK (1988-1992)

| | ALL INTEGRAL SUBCOMPONENTS | | | ALL TERMINAL EQUIPMENT | | |
|---|---|---|---|---|---|---|
| VOLTAGE CLASS | FREQUENCY occurrences per year | MEAN DURATION (hours) | MEDIAN DURATION (hours) | FREQUENCY occurrences per year | MEAN DURATION (hours) | MEDIAN DURATION (hours) |
| Up to 109 kV | 2.2128 | 23.1 | 2.17 | 2.9362 | 5.3 | 1.43 |
| 110 - 149 kV | 0.5455 | 38.0 | 5.07 | 2.0000 | 5.7 | 2.16 |
| 200 - 299 kV | 4.0000 | 6.0 | 5.67 | 1.0000 | 1.4 | 1.40 |
| 600 - 799 kV | 4.0000 | 229.9 | 7.18 | 1.0000 | 26.4 | 8.05 |

TABLE XII
FREQUENCY AND DURATION OF ALL INTEGRAL SUBCOMPONENTS AND ALL TERMINAL EQUIPMENT FORCED OUTAGES SHUNT REACTOR BANK (1988-1992)

| | ALL INTEGRAL SUBCOMPONENTS | | | ALL TERMINAL EQUIPMENT | | |
|---|---|---|---|---|---|---|
| VOLTAGE CLASS | FREQUENCY occurrences per year | MEAN DURATION (hours) | MEDIAN DURATION (hours) | FREQUENCY occurrences per year | MEAN DURATION (hours) | MEDIAN DURATION (hours) |
| Up to 109 KV | 0.0344 | 627.8 | 5.13 | 0.1484 | 46.1 | 0.33 |
| 110 - 149 kV | 0.0 | 0.0 | 0.0 | 0.0267 | 0.1 | 0.08 |
| 150 - 199 kV | 0.0 | 0.0 | 0.0 | 0.0 | 0.0 | 0.0 |
| 200 - 299 kV | 0.0800 | 89.4 | 12.51 | 0.2000 | 42.5 | 4.90 |
| 300 - 399 kV | 0.0897 | 91.4 | 18.50 | 0.0717 | 3.3 | 0.61 |
| 500 - 599 kV | 0.0314 | 29.2 | 7.80 | 0.0392 | 46.9 | 4.93 |
| 600 - 799 kV | 0.2375 | 477.9 | 5.50 | 0.1029 | 65.8 | 4.17 |

TABLE XIII
FREQUENCY AND DURATION OF ALL INTEGRAL SUBCOMPONENTS AND ALL TERMINAL EQUIPMENT FORCED OUTAGES SHUNT CAPACITOR BANK (1988-1992)

and their percentage of the total frequency of subcomponent forced outages are:

| | | |
|---|---|---|
| 110–149 kV | Insulation System | 58.18% |
| 150–199 kV | No forced outages occurred | 0.0% |
| 200–299 kV | Insulation System | 40.00% |
| 300–399 kV | Insulation System | 50.00% |
| 500–599 kV | Insulation System | 100.00% |

The dominant known cause(s) of **terminal equipment** forced outages for *cable related forced outages* for each voltage class and their percentage of the total frequency of terminal equipment forced outages are:

| | | |
|---|---|---|
| 110–149 kV | Control & Protection Equipment | 40.00% |
| | Disconnect | 37.14% |
| 150–199 kV | No forced outages occurred | 0.0% |
| 200–299 kV | Unknown | 50.00% |
| 300–399 kV | No forced outages occurred | 0.0% |
| 500–599 kV | Control & Protection Equipment | 75.00% |

The frequency and duration of forced outages for the following equipment are listed in their respective Tables:

1) Synchronous Compensator Table XI.
2) Shunt Reactor Bank Table XII.
3) Shunt Capacitor Bank Table XIII.
4) Series Capacitor Bank Table XIV.

Details of the subcomponents and terminal equipment


Copyright © 1998 IEEE. All rights reserved.

TABLE XIV
FREQUENCY AND DURATION OF ALL INTEGRAL SUBCOMPONENTS AND ALL TERMINAL EQUIPMENT FORCED OUTAGES SERIES CAPACITOR BANK (1988-1992)

| | ALL INTEGRAL SUBCOMPONENTS | | | ALL TERMINAL EQUIPMENT | | |
|---|---|---|---|---|---|---|
| VOLTAGE CLASS | FREQUENCY occurrences per year | MEAN DURATION (hours) | MEDIAN DURATION (hours) | FREQUENCY occurrences per year | MEAN DURATION (hours) | MEDIAN DURATION (hours) |
| Up to 109 KV | 0.0067 | 193.3 | 193.27 | 0.0 | 0.0 | 0.0 |
| 110 - 149 kV | 0.6857 | 57.7 | 5.60 | 0.1143 | 377.1 | 13.60 |
| 200 - 299 kV | 0.0 | 0.0 | 0.0 | 0.0 | 0.0 | 0.0 |
| 500 - 599 kV | 4.0222 | 41.0 | 12.08 | 2.6000 | 42.5 | 18.92 |
| 600 - 799 kV | 0.2222 | 2.9 | 2.92 | 0.1111 | 10.0 | 10.00 |

forced outages for the above four equipment categories are not provided in this paper due to the scope of the paper, but these details can be found in [3].

## V. CONCLUSIONS

This paper has presented a summary of the Canadian Electrical Association's "Equipment Reliability Information System Forced Outage Performance of Transmission Equipment" of the period 1988-1992. The paper presented the frequency and duration (i.e., mean and median) of forced outages of the following major equipment by voltage class:

1) Transformer Banks.
2) Circuit Breakers.
3) Cables.
4) Siatic Compensator.
5) Shunt Reactor Banks.
6) Shunt Capacitor Banks.
7) Series Capacitor Banks.

For all the major equipment categories, the forced outage statistics were divided into "all integral subcomponents" and "all terminal equipment" categories to provide a clear distinction between the major causes of transmission system equipment. For each major equipment category, the dominant subcomponent and dominate terminal equipment which contributed the most to the frequency of the major equipment forced outages was identified.

For transmission banks, the subcomponent and terminal equipment frequency of forced outages were of the same order of magnitude for the on-three phase element transformer bank and the three-single-phase element transformer bank. In the majority of cases, for both types of transformer banks, the mean duration was significantly greater than the median for all voltage classes. The dominant transformer bank subcomponent forced outages were "On-load Tap Changer" and the "Auxiliary Equipment" for all voltage classes. The dominant transformer terminal equipment forced outages was the "**Control and Protection Equipment**" for all voltage categories.

For circuit breakers, the higher the voltage class, the higher the frequency of forced outages for subcomponent and terminal equipment forced outages. The mean duration for subcomponent and terminal equipment forced outages was significantly higher than the median for both categories. The dominant circuit breaker subcomponent forced outages were the "Operating Mechanisms" and the "interrupting Medium." The dominant circuit breaker terminal equipment forced outage category was "**Control and Protection Equipment.**"

For cables the terminal related forced outages were significantly less than the cable related forced outages. The dominant cable subcomponent forced outage was the "Insulation System" and the dominant terminal related forced outage was again "**Control and Protection Equipment.**"

The frequency and duration of transmission equipment forced outage statistics presented in this paper provides the basis for analyzing transmission system configurations and assessing the impact of forced outages on industrial and commercial facilities (e.g., voltage sags at a given physical location, the cost of power outages, the optimum operating configuration, etc.). The methodologies for performing these studies are found in IEEE Std. 493 (IEEE Gold Book).

## ACKNOWLEDGMENT

The author would like to thank the following members of the Canadian Electrical Association: M. Oprisan, E. M. Ezer, and R. A. Del Bianco for their invaluable discussions and assistance in providing me with the CEA Equipment Reliability Information System reports on Forced Outage Performance of Transmission Equipment and the Instruction Manuals for Reporting.

## REFERENCES

[1] Recommended Practice for the Design of Reliable Industrial and Commercial Power Systems, IEEE Std. 493, (IEEE Gold Book).

[2] Instruction Manual For Reporting Component Forced Outages of Transmission Equipment, Canadian Electrical Association, Suite 1600, One Westmount Square, Montreal, Quebec, H3Z 2P9.

[3] Report: Forced Outage Performance of Transmission Equipment for the Period Jan. 1, 1988-Dec. 31, 1992, Canadian Electrical Association, Suite 1600, One Westmount Square, Montreal, Quebec, H3Z 2P9.

[4] An IEEE Survey on US and Canadian Overhead Transmission Outages at 250 kV and Above, Data Analysis Task Force, Working Group on Statistics of Line Outages, General Systems Subcommittee, Transmission & Distribution committee, *IEEE Trans. Power Delivery*, vol. 9, no 1, pp. 21-39, Jan. 1994.

[5] IEEE Task Force on Line Design Characteristics, Working group on statistics of Line Outages, An IEEE Survey of Transmission Line Population and Design Characteristics, *IEEE Trans. Power Delivery*, vol. 6, pp. 1934-1945, Oct. 1991.

[6] IEEE Standard Terms for Reporting and Analyzing Outage Occurrences and Outage States of Electrical Transmission Facilities, IEEE Std. 859-1987.

[7] IEEE Task Force on the Requirements for the Survey of Line Outage Data, IEEE AT&D Working Group on Statistics of Line Outages

Copyright © 1998 IEEE. All rights reserved.

Background, Status and Prospects, in *Proc. 14th INTER-RAM Conf. Elec. Power Industry*, Toronto, Ontario, May 26–29, 1987, pp. 255–262.

[8] M. A. Baribeau, C. T. Driscoll, and D. McGillis, "The Canadian electrical association's equipment reliability information system," in *Proc. Third Int. Conf. Reliability of Power Supply Systems*, IEC conference publication no. 225, London, UK, Sept. 19–21, 1983, pp. 150–154.

[9] M. A. Baribeau and D. McGillis, "Analysis of transmission equipment performance based on the CEA system," in *Canadian Society for Electrical Engineering, May, 1984 Conf.*, Halifax, Nova Scotia.

[10] "Predicting transmission outages for system reliability evaluations," Electric Power Research Institute, EPRI-3880, Project 1468-2, May, 1985.

[11] M. G. Lauby, K. T. Khu, R. W. Polesky, R. E. Vandello, J. H. Doudna, P. J. Lehlman, and D. D. Elempel, "MAPP bulk transmission outage data and collection," *Trans. Power Apparatus and Systems*, vol. PAS-103, pp. 213–221, Jan. 1984.

[12] M. G. Lauby, R. P. Ludorf, J. H. Doudna, D. D. Klempel, P. J. Lehman, and C. G. Dahl, "Analysis of pooling 345 kV bulk transmission outage data between the mid-continent area power pool and Northeast utilities," *Trans. Power Apparatus and Systems*, vol. PAS-104, pp. 2427–2434, Sept. 1985.

[13] M. G. Lauby, J. H. Doudna, R. W. Polesky, P. J. Lehman, and D. D. Klempel, "Effects of pooling weather associated MAPPA bulk transmission outage data on calculated forced outage rates," *Trans. Power Apparatus and Systems*, vol. PAS-103, pp. 2345–2351, Aug. 1984.

[14] A. D. Patton, "Determination and analysis of data for reliability studies," *IEEE Trans. Power Apparatus and Systems*, vol. PAS-87, pp. 84–100, Jan. 1968.

[15] R. J. Ringlee, "Techniques for pooling outage data," *Pennsylvania Electric Association (PEA), System Planning Committee Fall Meeting*, Sharon, PA, Oct. 1967.

**Don O. Koval** (S'64–M'65–SM'78–F'90), for a photograph and biography, see this issue, p. XXX.



Copyright © 1998 IEEE. All rights reserved.

## Appendix O

# Interruption Costs, Consumer Satisfaction and Expectations for Service Reliability

By
Michael J. Sullivan, Terry Vardell, B. Noland Suddeth, Alli Vojdani

Paper No. 95 SM 572-8 PWRS. IEEE-PES Summer Power Meeting
July 23-27, 1995, Portland, Oregon.

Copyright © 1998 IEEE. All rights reserved.

This page is intentionally blank

95 SM 572-8 PWRS

# Interruption Costs, Customer Satisfaction and Expectations for Service Reliability

Michael J. Sullivan, Vice President
Freeman, Sullivan & Co.
San Francisco, CA 94105 USA

B. Noland Suddeth, Manager of Transmission Control
Duke Power Company
Charlotte, NC 28201 USA

Terry Vardell, Manager of Market Research
Duke Power Company
Charlotte, NC 28201 USA

Ali Vojdani, Manager of Power System Analysis
Electrical Power Research Institute
Palo Alto, CA 94304 USA

*Abstract* — **This paper summarizes results of a comprehensive study of the economic value of electric service carried out by Duke Power Company in cooperation with the Electric Power Research Institute. In the study, customer interruption costs were estimated for generation, transmission and distribution outages of differing lengths occurring under varying circumstances. Interruption costs for momentary outages and voltage disturbances are also reported. In addition to these economic indicators of customer value of service, customer expectations for service reliability and power quality and their satisfaction with the service currently offered are reported. Statistical methods and procedures used in estimating interruption costs are described.**

## I. Introduction

Some electric utility customers experience significant economic losses when power is interrupted or when power quality problems occur. These customers need and expect the highest quality and reliability of service that the utility can supply. On the other hand, the vast majority of utility customers experience relatively little inconvenience or cost as a result of electric outages or power quality problems. They do not desire, and are not willing to pay for, significantly improved reliability and power quality.

Increasingly, utilities are being squeezed between the conflicting demands of customers who require higher quality (and more costly) service and those who demand lower rates.

95 SM 572-8 PWRS A paper recommended and approved by the IEEE Power System Engineering Committee of the IEEE Power Engineering Society for presentation at the 1995 IEEE/PES Summer Meeting, July 23-27, 1995, Portland, OR. Manuscript submitted January 3, 1995; made available for printing May 5, 1995.

To compete effectively given this situation, it is important for utilities to establish a balance between the costs of improving service reliability and quality, and the economic benefits that these improvements bring to customers. This approach to reliability planning is generally called Value Based Reliability Planning (VBRP).

Value Based Reliability Planning directly takes account of the value of reliability and power quality to customers in assessing the cost effectiveness of proposed investment alternatives. Typically, VBRP planning procedures incorporate customer value of service in the planning process at the point at which investment alternatives are subjected to cost-benefit analysis. This is done by including avoided customer losses (due to outages and poor power quality) in the stream of benefits that arise from utility investments to improve reliability or power quality.

Fig. 1. provides an example of the relationship between service reliability, utility investment cost and customer interruption cost [1]. The objective of value based reliability planning is to balance the utility's investment cost against the interruption costs experienced by customers [2,3]. These costs are balanced by investing in reliability so that the Total

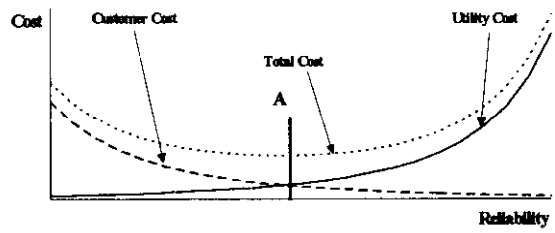


Fig. 1. Minimizing the Total Cost Of Reliability

© 1995 IEEE

Copyright © 1998 IEEE. All rights reserved.

Cost of service reliability (i.e., investment cost plus customer interruption costs) is minimized. The line A in Fig. 1. is the point on the Total Cost curve at which the Total Cost is a minimum. All utility investments with Total Costs appearing on the left side of line A are cost effective and reasonable. All those on the right side of line A are investments which increase the total cost and are unreasonable. Investment cost estimates are obtained through conventional engineering cost estimation techniques. Customer interruption cost estimates are obtained by directly surveying customers to determine the costs they experience as a result of different kinds of reliability and power quality problems.

As part of a larger effort within Duke Power Company to establish value based reliability planning, a comprehensive value of service study of Duke Power Customers was carried out in cooperation with the Electric Power Research Institute in 1992-93. In addition to interruption costs, the study measured customer satisfaction with and expectations for service reliability and quality.

## II. Approach

Customer interruption costs are the economic losses customers experience as a result of interruptions of electric service or power quality problems. These costs vary from customer to customer as a function of a number of factors including:

- the customer's dependence on electricity;
- the nature and timing of the electric supply disturbance; and
- the economic value of the activity being disrupted.

Consequently, to estimate customer interruption costs it is necessary to statistically survey representative samples of customers.

Procedures for statistically surveying customer interruption costs have been developed and refined by a number of utilities over the past 15 years; and in the late 1980s the Electric Power Research Institute (EPRI) co-sponsored several large scale efforts to demonstrate the estimation of outage costs using state of the art survey techniques [4]. The basic methodology used in these studies involves directly asking random samples of customers in different market segments (i.e., residential, commercial and industrial) to estimate their economic losses as a result of power reliability and quality problems commonly considered in utility planning.

Using the methods that had been developed and tested over the years by EPRI and others, information was collected from customers concerning the economic and operational impacts of a number of reliability and quality conditions. The seven outage scenarios outlined below comprise the minimum set of conditions for which information is required to support VBRP at Duke Power Company. These conditions included:

1) a one-hour Generation outage (i.e., an outage occurring at the time of system peak with advance notice;
2) a one-hour summer afternoon T&D outage;
3) a four-hour summer afternoon T&D outage;
4) a two-hour winter morning T&D outage;
5) a 1-2 second momentary outage (clear weather);
6) several 1-2 second momentary outages (occurring during a summer storm); and
7) a 15 to 20 percent voltage sag (large customers only).

Customers cannot distinguish between outages resulting from generation capacity shortfalls (generation outages) and those resulting from failures on the transmission or distribution system (T&D outages). Nevertheless, the conditions that customers experience during outages originating in the generation system are very different from the conditions they experience for outages originating on the transmission or distribution system; and as will become clear below, these different conditions result in very different outage costs.

Outages originating on the transmission and distribution system generally occur without warning and can last anywhere from microseconds to many hours (even days). Outages resulting from generation capacity shortfalls are different in several important respects. Generation capacity shortfalls do not cause the collapse of the utility system because the operation of the system during generation shortfalls is governed by emergency operating procedures. These procedures dictate ameliorative actions that the utility will take when operating reserves are forecasted to fall below specified levels. Among the actions that are usually called for are public appeals for voluntary curtailments and if the situation continues to worsen, interruption of randomly selected retail circuits preceded by radio and television announcements. These interruptions are designed to last a fixed period of time (usually one hour) and are imposed in rotating fashion. Because the duration of the outage is fixed and known and because the customer receives advance notice of its onset, the costs resulting from generation outages are significantly lower than the costs that customers would otherwise experience.


Copyright © 1998 IEEE. All rights reserved.

Table 1. summarizes critical features of customer interruption cost surveys conducted during the study. The survey designs, sample designs and study procedures differed by market segment and customer size. Residential customers were surveyed by mail. Small and medium sized industrial and commercial customers were surveyed using a combination of telephone and mail; and large industrial and commercial customers were surveyed in-person by experienced cost estimators.

## III. Interruption Cost Summary

In the event of a generation outage, the average cost per kWh of unserved energy on the Duke Power System is estimated to be $7.79 (1992). Table 2. summarizes average customer interruption costs per event and per kWh for summer afternoon outages of one hour duration. The generation outage occurs with one-hour advance notice via radio and television announcements by the utility. Using the sample sizes and measurement techniques applied in this study, there is only a five percent chance that true system-wide generation outage costs are below $5.38 per kWh or above $10.10 per kWh.

Commercial and industrial customers experience much higher interruption costs than residential customers. In Table 2, it is apparent that residential customer interruption costs are significantly lower than those of either commercial or industrial customers. For an outage lasting one hour on a summer afternoon originating in the transmission or distribution system, the average residential customer would experience an interruption cost of $5.39 (or about $2.07 per coincident kWh of residential customer load). For the same outage, the average commercial customer would experience a cost of $1,317 (or about $45.82 per coincident kWh of commercial customer load). For industrial customers, the average cost of this outage is estimated to be $9,404 (or about $7.61 per coincident kWh of industrial customer load). Overall the average customer cost per unserved kWh for a one hour outage without advance notice is estimated to be $16.15 (1993).

Interruption costs vary from customer to customer depending on a number of factors. Fig. 2a. and Fig. 2b. display the distribution of customer interruption costs for residential, commercial and industrial customers for a one-hour outage on a summer afternoon without advance notice. Residential customer interruption costs range from $0 to $64. Commercial customer interruption costs range from $0 to over $100,000, and industrial customer interruption costs range from $0 to over $1,000,000.

Differences in interruption costs among commercial and industrial customers are systematic and can be predicted from related production factors (i.e., the customer's business type, size and production technology). Using these production factors, multiple regression models were developed for predicting customer interruption costs. Fig. 3. shows the relationship between predicted and actual interruption costs for a multiple regression model predicting customer interruption costs from these factors. Predictions from the regression model are not perfect, but they are significantly more accurate than predictions based only on

Table 1. Duke Power Company - Value of Service Study Approach and Methodology

| Duke Power Customer Class | Customer Class Characteristics | Sample Design | Outage Cost Estimation Methods | Customers Contacted | Customers Responded | Response Rate |
|---|---|---|---|---|---|---|
| Residential | All Residential Customer Accounts | Random Sample Stratified by Geographic Location and Prior Reliability | Mail Survey, using Willingness to Pay measures with High Control and Low Control variations | 2,187 | 1,584 | 72% |
| Large Industrial and Commercial | Customers that Receive Power at Non-Residential Rate Schedules with Demand > 1MW or Receiving Power at Transmission Voltages | Random Sample Stratified by Business Type and Transmission or Distribution Voltage Levels | On-Site Surveying Using Direct Worth Outage Cost Calculations | 299 | 210 | 70% |
| Small and Medium Industrial and Commercial | Customers that Receive Power at Non-Residential Rate Schedules with Demand <1MW and are on Distribution Circuits | Random Sample Stratified by Business Type and Electrical Demand | Combination of Telephone and Mail Survey Using Direct Worth Outage Cost Estimates | 2,797 | 1,080 | 40% |



Copyright © 1998 IEEE. All rights reserved.

Table 2. Customer Outage Cost Summary

| Market Segment | Generation Outage *Mean Outage Cost* | Transmission or Distribution Outage *Mean Outage Cost* |
|---|---|---|
| **Residential Customers** | | |
| Cost Per Event | $4.91 | $5.39 |
| Cost Per Peak kWh | $1.88 | $2.07 |
| **Commercial Customers** | | |
| Cost Per Event | $604.19 | $1,317.21 |
| Cost Per Peak kWh | $21.02 | $45.82 |
| **Industrial Customers** | | |
| Cost Per Event | $4,443.00 | $9,403.55 |
| Cost Per Peak kWh | $3.60 | $7.61 |
| **System Wide** | | |
| Cost Per Event | n/a | n/a |
| Cost Per Peak kWh | $7.79 | $16.15 |

Michael J. Sullivan, "Volume Five: Outage Cost Summary", in Final Report For Value Of Service Study, December 1992

market segment means (i.e., the mean for commercial or industrial customers). For example, multiple $R^2$s for regression models predicting outage costs arising from different kinds of outages ranged from .67 to .34. That is, these models explain between 34 and 67 percent of the variation in outage costs about the averages for the market segments — a statistically significant improvement over the predictive power arising from market segment alone.

Since much less information is required to estimate customer outage costs from the parameters in the regression model, it is possible to calculate customer specific outage cost estimates for all large customers (from regression models) and thus to obtain detailed estimates of customer outage costs without the expense of on-site surveys of all customers. This approach is being used by Duke Power Company to calculate circuit specific outage costs including unique estimates for each of its 1,000 largest customers.

Although less of the variation in residential interruption cost is accounted for by variation in other household attributes, significant statistical associations are found between residential customer interruption costs, the size of the household and the age of its inhabitants. In general, the older the members of a household, the lower the household's average interruption cost. When children are present, customer interruption costs are significantly higher.

Circuit level interruption costs should be used when applying interruption cost information to transmission and distribution planning problems. While system average interruption cost estimates are meaningful and useful for generation planning, significant errors can be made by applying system average figures to particular circuits. Because of the variation that exists across circuits in the distribution of customers by market segment and size, customer interruption costs for particular circuits may deviate dramatically from system averages.

From the individual customer's point of view, generation outages (i.e.,. those including advance warning) are inherently less costly than transmission and distribution outages (i.e., those without warning). Advance warning significantly lowers the costs of outages for commercial and industrial customers. Table 3. illustrates the effect of advance notice on customer outage costs.

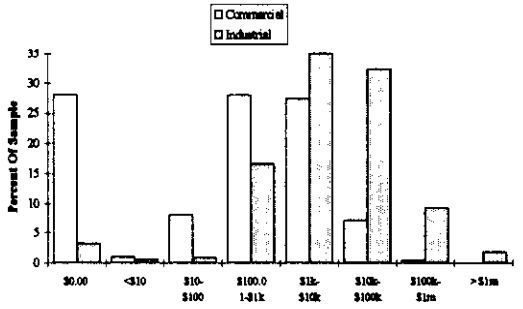


Fig. 2a. Commercial and Industrial Customers

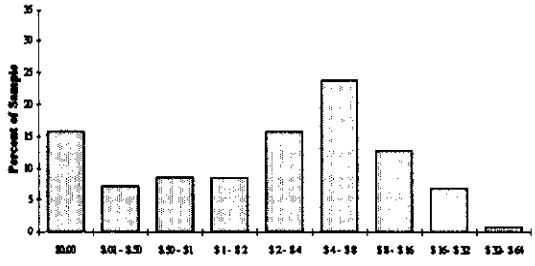


Fig. 2b. Residential Customers



Copyright © 1998 IEEE. All rights reserved.

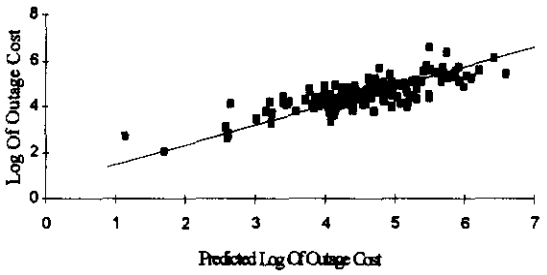


Fig. 3. Prediction of Customer Outage Costs

Given one hour advance notice, the average large commercial customer can reduce its interruption cost by 35 percent, from $22,506 to $14,574. For large industrial customers the savings due to advance notice are even greater. Given one hour advance notice, the average large industrial customer can reduce its interruption cost by 43 percent, from $46,695 to $26,582.

Voltage sags of 20 percent for less than 30 cycles can result in significant interruption costs for about 10 percent of Duke Power's largest industrial and commercial customers. On average, large commercial and industrial customers estimated that a voltage sag would cost about $7,694. However, slightly less than 50 percent of the large customers surveyed said that they would experience no losses as a result of a voltage sag. The interruption costs estimates provided by the remaining 50 percent of customers ranged from a low of $13 to a high of about $285,000. Ten percent of the large customers surveyed estimated their losses from a voltage sag would be in excess of $23,600. For customers who said that they would experience costs as a result of a voltage sag, the average cost was estimated to be $60,407.

Momentary interruptions can result in significant interruption costs for most of Duke Power's large commercial and industrial customers. On average, large customers estimated they would experience costs of $11,027 as a result of a 1 to 2 second momentary interruption on a summer afternoon. Approximately 35 percent said they would experience no losses as a result of a 1 to 2 second outage. Fifty percent of the large customers said that a momentary interruption of 1 to 2 seconds would result in outage costs in excess of $1,500; and ten percent of large customers said that their costs in the event of a momentary outage would exceed $45,130. For customers who said that they would experience costs as a result of a momentary outage, the average cost was estimated to be $72,426.

Table 3. Customer Interruption Costs With and Without Advance Notice

| Customer Class | With Notice | W/O Notice |
|---|---|---|
| Large Commercial | $14,574 | $22,506 |
| Large Industrial | $26,582 | $46,695 |

## IV. Customer Expectations For Service Reliability

Most customers understand that it is virtually impossible to provide perfect power supply reliability and power quality. However, they differ dramatically in their expectations for the utility's performance along these dimensions.

Large commercial and industrial customers expect nearly perfect service reliability. Most of the large commercial and industrial customers in the study were served at transmission voltages. These customers experience almost no outages. From their reactions to the survey, it is reasonable to conclude that most large commercial and industrial customers probably do not consider any number of outages of any duration to be acceptable.

Small and medium sized commercial and industrial customers expect significantly higher reliability than residential customers. Customers on primary and secondary distribution circuits were asked to indicate the number of outages (of different durations) that they consider to be acceptable in a given year. The objective of this battery of questions was to measure the customer's desired level of service reliability in non-economic terms. The outage durations studied included momentaries, short outages (i.e., less than one hour) and long outages (i.e., outages lasting one to four hours). In the survey, respondents could indicate that they thought outages of the above durations would be acceptable at one of the following intervals: daily, weekly, monthly, every few months, twice a year, once a year, and none of the above.

Fig. 4a. and Fig. 4b. compare the answers to the above question given by residential and small and medium sized commercial and industrial customers. The figures show that residential customers have significantly lower expectations for service reliability than commercial and industrial customers. For example, Fig. 4a. shows that fifty percent of residential customers consider two or less extended outages per year to be an acceptable level of service. On the other hand, fifty percent of commercial and industrial customers expect one or fewer outages per year. That is, the median



Copyright © 1998 IEEE. All rights reserved.

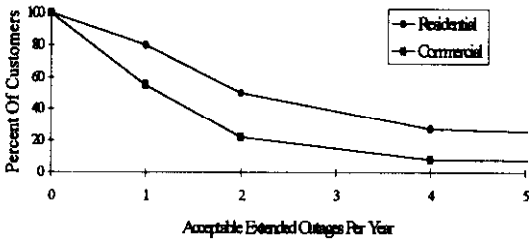


Fig. 4a. Acceptable Number of Extended Outages

commercial and industrial customer expects service to be about twice as reliable as the median residential customer.

The difference between expectations for service reliability for non-residential and residential customers is even more pronounced for momentary outages. Fig. 4b. shows that the median residential customer considers service to be acceptable if the number of momentary outages is less than about 38 per year -- about once every ten days. On the other hand, the median non-residential customer expects fewer than 12 outages per year -- about one per month. Here non-residential customers expect or desire service that is about three times as reliable as that desired by residential customers.

## V. Customer Satisfaction

The satisfaction of customers with service reliability was measured in all three studies to ensure that the issue of customer satisfaction could be addressed. The customer satisfaction measures used in the surveys were comparable to those used on other studies of Duke Power customers.

The relationship between the reliability of utility service and residential customer satisfaction is more complicated than it might appear at first. The results of this survey indicate that reliability history has no direct effect on a customer's satisfaction with utility service. That is, customers who receive relatively less reliable service are no less satisfied than other customers who receive higher reliability service. Fig. 5. shows that there are relatively small differences in the levels of satisfaction for customers in the survey sampled from circuits with dramatically different prior reliability histories.

Residential customer satisfaction is determined by the customer's perception of their service reliability, not by their actual service reliability. Residential customer's perception of the reliability of their service is highly correlated with their satisfaction. Customers who perceive that they are experiencing relatively high numbers of momentary or sustained outages are significantly less satisfied than customers who believe that they are not receiving relatively high numbers of outages.

Customer's perception of the reliability of their electric service is influenced by the reliability of their service, but most residential customers cannot distinguish high reliability service from low reliability service. Customers who experience relatively small numbers of momentary and sustained outages are significantly more likely to say that the number of outages they experience is very low than are customers who experience these kinds of outages more frequently. However, the relationship between perceived service reliability and actual service reliability is tenuous. Only customers in the extremes of the reliability distribution appear to be able to discriminate their level of service reliability, and then only imperfectly.

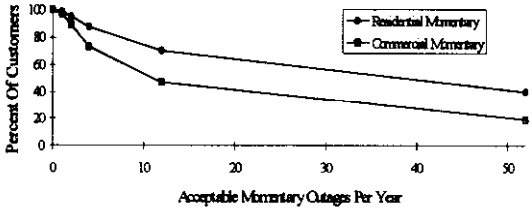


Fig. 4b. Acceptable Number of Momentary Outages

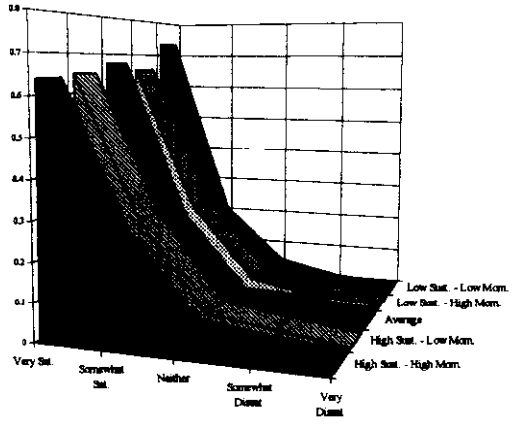


Fig. 5. Residential Satisfaction



Copyright © 1998 IEEE. All rights reserved.

The effect of actual service reliability on customer satisfaction is indirect, based on the customer's perception of the reliability of its service. Many other factors affect the customer's perception of the reliability of their service besides the actual level of reliability that they experience.

## VI. Conclusions

This study shows that customer interruption costs vary systematically and predictably as a function of customer type and size and within commercial and industrial customers by the processes, equipment and products being made and sold. It documents the ameliorative effects of advance warning on interruption costs arising from generation outages and suggests that electric emergency planning may be a highly cost effective alternative to investment in new generation. Because there are significant differences across utility circuits in the numbers and types of customers served, this study suggests that it is inappropriate to apply system wide interruption cost estimates to transmission and distribution planning problems. Work is ongoing at Duke Power Company and the Electric Power Research Institute to develop interruption cost estimates that are appropriate for these applications.

## References

[1] Allan R. and R. Billinton, "Power System Reliability and its Assessment: Part 3, distribution systems and economic considerations", Power Engineering Journal, August 1993

[2] Burns S. and G. Gross, "Value of Service Reliability" , IEEE Transactions on Power Systems, August 1990, Vol . 5 No. 3

[3] Munasinghe M. and M. Gellerson, "Economic Criteria For Optimizing Power System Reliability Levels", Bell Journal of Economics, Spring 1979, 353-365

[4] *Cost-Benefit Analysis of Power System Reliability: Determination of Interruption Costs - Vol. 1: Measurement Methods and Potential Applications in Reliability Cost-Benefit Analysis*, EPRI EL-6791, April 1990

## Biographies

**Michael J. Sullivan** has a Ph. D. in Sociology from Washington State University. Prior to founding Freeman, Sullivan & Co., he was Operations Coordinator for Load Management at Pacific Gas and Electric Company and a Lecturer at the Hass Business School at the University of California, Berkeley. He has over 20 years experience directing large scale statistical surveys designed to estimate population parameters for use in engineering and scientific modeling and forecasting. He is currently Vice President of Practice at Freeman, Sullivan & Co.

**Terry Vardell** has an MBA from the University of South Florida. He has over 25 years experience as a market researcher in the utility, banking and retail service markets. He joined Duke Power Company as a project manager in Market Research in 1991 and is now Manager of Market Research.

**B. Noland Suddeth** earned a M. S. and a B. S. degree in electrical engineering from Clemson University in 1984 and 1982, respectively. Subsequently, he joined Duke Power Company in Charlotte, NC as an engineer in System Planning working through Generation, Distribution and Bulk Power Planning over a nine year period. He is currently Manager of the Transmission Control Center at Duke. Mr. Suddeth is also a Lecturer at the University of North Carolina at Charlotte. Mr. Suddeth is a registered Professional Engineer in NC and SC and is a member of IEEE.

**Ali F. Vojdani** earned a Ph.D. degree in Electrical Engineering from McGill University in Montreal, Canada in 1982. Subsequently, he joined Pacific Gas and Electric Company, providing analytical and computer services to operations and planning departments as Supervisor of Systems Engineering Group until 1993. He is currently Manager of Power System Analysis at Electric Power Research Institute. Dr. Vojdani is a Senior Member of IEEE and a member of Technical Committee of Power Industry Computer Applications (PICA) Conference.



Copyright © 1998 IEEE. All rights reserved.

This page is intentionally blank

## Appendix P

# Survey Results of Low Voltage Breakers As Found During Maintenance Testing

By
P. O'Donnell

IEEE Industrial and Commercial Power Systems Technical Conference
New Orleans, May 6-9, 1996.

Reprint from IEEE Conference Record
96CH35920, pp. 1 - 4.

Copyright © 1998 IEEE. All rights reserved.

This page is intentionally blank

# Survey Results of Low Voltage Circuit Breakers as Found During Maintenance Testing

Working Group Report

Pat O'Donnell
El Paso Natural Gas Co.
El Paso, TX
(Coordinating Author)

Other Working Group Members: W.F. Braun, C.R. Heising, P.P. Khera, M. Kornblit, K.D. McDonald

***Abstract*** **- The Power Systems Reliability Subcommittee strives to maintain current reliability data on major electrical equipment to assist the industry in accomplishing realistic and meaningful reliability studies. This paper presents results of a low voltage circuit breaker reliability survey achieved through use of available results from testing during preventive maintenance. A substantial number of test results were obtained to allow credible results for a few different circuit breaker categories. A similar set of results was published in a paper[1] for the 1990 Industry Applications Society Conference. Most of these results have been incorporated into this new expanded effort.**

## INTRODUCTION

Results of a low voltage circuit breaker reliability survey, obtained from circuit breaker preventive maintenance tests are presented here. The results show differences between various categories and what components failed, allowing the reader to judge with some degree of confidence, the weaknesses and strengths of the circuit breakers. Since the results are taken from circuit breaker tests, failure rate as a function of time was not possible. However, because of the nature of the operation of this equipment type, these forms of data and results are of value since often a failure or pending failure is not evident until a test is conducted.

In keeping with the policy of the Power Systems Reliability Subcommittee, survey results of this type do not identify manufacturers, do not promote any types or designs nor are the results intended to draw definite conclusions. This is left to the reader.

The following tables reflect available data from the tests, but only where sufficient data were available to present credible results (in the judgment of this working group).

## GENERAL

Certain categories were possible to present, as evidenced in the tables to follow, and some comment is beneficial here in understanding the results. Many tests described certain circuit breakers as being in "new" condition or appearing "new". These were broken out allowing comparison to "old" circuit breakers or those not identified as in "new" condition. Some circuit breakers were tested more than once. Number of tests are shown and were counted separately if approximately 3 years or more apart. It is important to remember the results here are taken from tests that did not identify service conditions, age, or time of use. The tables below show number of tests and also number of circuit breakers to allow evaluation based on either. The failure modes available from the tests are defined as follows.

Trip Unit : failed to operate - repaired or replaced (Note: where calibration

Copyright © 1998 IEEE. All rights reserved.

could not be corrected by readjustment and required replacement, a trip unit failure was counted)

Trip Calibration : not able to trip within specified current and time range -required readjustment

Mechanical : springs, arms, levers, hardened lubricant, etc. - repaired or replaced

Power Contacts : alignment, incorrect pressure, pitted, etc. - repaired or replaced

Arc Chutes : chipped, cracked, burned, etc. - repaired or replaced

Auxiliary Device : auxiliary contacts, indicators, pushbuttons, etc. - repaired or replaced

## OVERALL SUMMARY (TABLE 1)

Table 1 shows all circuit breakers tested and what failed during a test. The trip unit and trip calibration were the highest in failures, the percentage of failures being 2 or more times that of other failure modes.

TABLE 1

| | | |
|---|---|---|
| Total No. Bkrs | 1174 | |
| Total No. Tests | 1989 | |
| Total No. Failures at Test | 294 | |
| | No. of Flr's | % of Tests |
| Failed Component: | | |
| Trip Unit | 109 | 5.5 |
| Trip Calibration | 84 | 4.4 |
| Mechanical | 45 | 2.3 |
| Power Contacts | 44 | 2.2 |
| Arc Chutes | 12 | 0.6 |
| Auxiliary Device | 10 | 0.5 |
| Total No. Failed Components | *304 | 15.3 |

* 10 circuit breakers had 2 failed components during one test

## SOLID STATE TRIP UNITS VS ELECTROMECHANICAL TRIP UNITS - (TABLE 2)

Table 2 compares solid state (S/S) trip units to electromechanical (EM) type. Results show the EM breaker types with a higher percentage of failures (or unacceptable operation) of all components. As some would predict, the EM trip units experienced substantially more failures than the S/S type, approximately twice the percentage. Since some circuit breakers were described in the test results as in "new" condition, these have been broken out to show any influence this condition may have had on the failures. There was no test data clearly showing EM type as "new", so it can be assumed that none of these appeared in "new" condition. The results show that the "new" S/S type, although showing some expected influence on the results, if broken out separately, would still not change this observation of EM types showing a higher percentage of failures. Another observation is that for all circuit breakers with S/S trip types, there is a more even distribution of percentage of failures over the different failure modes than for E/M types which clearly have the highest percentage of failures associated with the trip units.


Copyright © 1998 IEEE. All rights reserved.

TABLE 2

| Trip Unit Type | All EM | | All S/S | | New S/S | |
|---|---|---|---|---|---|---|
| Total No. of Bkrs | 662 | | 512 | | 99 | |
| Total No. of Tests | 1054 | | 935 | | 176 | |
| Failed Component | # of Flr's | % of Tests | # of Flr's | % of Tests | # of Flr's | % of Tests |
| Trip Unit | 81 | 7.7 | 28 | 3.0 | *2 | 1.1 |
| Trip Calibration | 60 | 5.7 | 24 | 2.6 | *0 | 0.0 |
| Mechanical | 26 | 2.5 | 19 | 2.0 | *4 | 2.3 |
| Power Contacts | 25 | 2.4 | 19 | 2.0 | *5 | 2.8 |
| Arc Chutes | *6 | 0.6 | *6 | 0.6 | *0 | 0.0 |
| Auxiliary Device | *6 | 0.6 | *4 | 0.4 | *0 | 0.0 |
| Total No. Failures | 204 | 19.4 | 100 | 10.7 | 11 | 6.2 |

* Small sample size - less than 8 failures

## SOLID STATE vs. ELECTROMECHANICAL ACCORDING TO FRAME SIZE (TABLE 3)

Table 3 shows how circuit breakers with S/S and EM trip units compare according to frame size. The 600 amp and 800 amp frame sizes are combined since very little difference is expected in applications. Larger frame sizes include 4000 amp, but the total number breakers and tests warranted combining all sizes 1600 amp and above. Results show a significant difference in percentage of failures between the smaller and larger frame sizes for circuit breakers with EM trip units, with the larger frame sizes higher than that of the smaller sizes. Frame size shows less effect on the difference between large and small circuit breakers with S/S trip types. EM trip units still show an obviously higher percentage of failures when compared to S/S type.

TABLE 3

| Frame Size | 600 A & 800 A | | | | 1600 A & Above | | | |
|---|---|---|---|---|---|---|---|---|
| Trip Unit Type | EM | | S/S | | EM | | S/S | |
| No. of Breakers | 464 | | 380 | | 198 | | 132 | |
| No. of Tests | 842 | | 778 | | 212 | | 157 | |
| Failed Component | # of Flr's | % of Tests | # of Flr's | % of Tests | # of Flr's | % of Tests | # of Flr's | %of Tests |
| Trip Unit | 50 | 5.9 | 20 | 2.6 | 31 | 4.6 | 8 | 5.1 |
| Trip Calibration | 41 | 4.9 | 22 | 2.8 | 19 | 9.0 | *2 | 1.3 |
| Mechanical | 17 | 2.0 | 16 | 2.1 | *6 | 2.8 | *3 | 1.9 |
| Power Contacts | 16 | 1.9 | 19 | 2.4 | *6 | 2.8 | *0 | 0.0 |
| Arc Chutes | *6 | 0.7 | *4 | 0.5 | *0 | 0.0 | *0 | 0.0 |
| Auxiliary Device | *2 | 0.2 | *3 | 0.4 | *2 | 0.9 | *1 | 0.6 |
| Total No. Failures | 132 | 15.7 | 84 | 10.8 | 64 | 30.2 | 14 | 8.9 |

* Small sample size - less than 8 failures

Copyright © 1998 IEEE. All rights reserved.

## SOLID STATE vs ELECTROMECHANICAL TRIP CALIBRATION FAILURES (TABLE 4)

Table 4 shows the failure relationship between the long time, short time and instantaneous settings of trip units. Some circuit breakers had more than one time setting out of calibration, evidenced by the total exceeding the total of trip calibration failures in tables above. Some circuit breakers did not have all 3 time settings available, but practically all had instantaneous settings with the exception of a few. The results show no calibration failures for the instantaneous settings for S/S trip units.

TABLE 4

| Trip Unit Type | All EM | | All S/S | |
|---|---|---|---|---|
| Total No. of Bkrs | 662 | | 512 | |
| Total No. of Tests | 1054 | | 935 | |
| Trip Calib. Failure | # of Flr's | % of Tests | # of Flr's | % of Tests |
| Long Time | 45 | 4.3 | 14 | 1.5 |
| Short Time | *1 | 0.1 | 11 | 1.2 |
| Instantaneous | 29 | 2.8 | *0 | 0.0 |
| **Total | 75 | 7.1 | 25 | 2.7 |

* Small sample size - less than 8 failures
** Some circuit breakers had more than one time setting out of calibration

## OBSERVATIONS/CONCLUSIONS

A significant observation from the results of this survey is that, for all circuit breakers, the percent of unacceptable operations of EM trip units were more than twice those with S/S trip units. This included both failure of the trip unit to operate and failure due to calibration.

EM trip units for circuit breakers rated 1600 amp and above, combined, experienced more than twice the percent of unacceptable operations as those rated 600 amp and 800 amp, combined. Again, this included both failure of the trip unit to operate and failure due to calibration.

For all circuit breakers, both percent of unacceptable operation of trip units and calibration were much higher than the other failure modes. Mechanical operation failures and power contact failures experienced the same percentage for both EM and S/S type circuit breakers.

## ACKNOWLEDGMENT

Appreciation is expressed to Kelly R. O'Donnell, University of Texas at San Antonio student, for contributions in data gathering and input.

## REFERENCES

[1] "Maintaining the Integrity of a Changing Power System", by M.J. Kornblit, IEEE Industry Applications Society, Oct. 7 - 12, 1990, Seattle, IEEE Catalog No. 90CH2935-9, pp 1357 - 1362



Copyright © 1998 IEEE. All rights reserved.