# IEEE Guide for Operation and Maintenance of Hydro-Generators

Sponsor

**Rotating Machinery Committee**
**of the**
**IEEE Power Engineering Society**

Approved 28 January 1999

**IEEE-SA Standards Board**

**Abstract:** General recommendations for the operation, loading, and maintenance of synchronous hydro-generators and generator/motors are covered. This guide does not apply to synchronous machines having cylindrical rotors. In this guide, the term hydro-generator is used to describe a synchronous machine coupled to a hydraulic turbine or pump-turbine. This guide is not intended to apply in any way to the prime mover.
**Keywords:** generator, generator/motor, horizontal hydro-generator, hydro-generator, loading, maintenance, operation, pumped-storage system, synchronous hydro-generator, vertical hydro-generator

---

The Institute of Electrical and Electronics Engineers, Inc.
345 East 47th Street, New York, NY 10017-2394, USA

Copyright © 1999 by the Institute of Electrical and Electronics Engineers, Inc.
All rights reserved. Published 19 February 1999. Printed in the United States of America.

Print: ISBN 0-7381-1535-5 SH94719
PDF: ISBN 0-7381-1536-3 SS94719

No part of this publication may be reproduced in any form, in an electronic retrieval system or otherwise, without the prior written permission of the publisher.

Copyright The Institute of Electrical and Electronics Engineers, Inc.
Provided by IHS under license with IEEE
No reproduction or networking permitted without license from IHS Not for Resale

**IEEE Standards** documents are developed within the IEEE Societies and the Standards Coordinating Committees of the IEEE Standards Association (IEEE-SA) Standards Board. Members of the committees serve voluntarily and without compensation. They are not necessarily members of the Institute. The standards developed within IEEE represent a consensus of the broad expertise on the subject within the Institute as well as those activities outside of IEEE that have expressed an interest in participating in the development of the standard.

Use of an IEEE Standard is wholly voluntary. The existence of an IEEE Standard does not imply that there are no other ways to produce, test, measure, purchase, market, or provide other goods and services related to the scope of the IEEE Standard. Furthermore, the viewpoint expressed at the time a standard is approved and issued is subject to change brought about through developments in the state of the art and comments received from users of the standard. Every IEEE Standard is subjected to review at least every five years for revision or reaffirmation. When a document is more than five years old and has not been reaffirmed, it is reasonable to conclude that its contents, although still of some value, do not wholly reflect the present state of the art. Users are cautioned to check to determine that they have the latest edition of any IEEE Standard.

Comments for revision of IEEE Standards are welcome from any interested party, regardless of membership affiliation with IEEE. Suggestions for changes in documents should be in the form of a proposed change of text, together with appropriate supporting comments.

Interpretations: Occasionally questions may arise regarding the meaning of portions of standards as they relate to specific applications. When the need for interpretations is brought to the attention of IEEE, the Institute will initiate action to prepare appropriate responses. Since IEEE Standards represent a consensus of all concerned interests, it is important to ensure that any interpretation has also received the concurrence of a balance of interests. For this reason, IEEE and the members of its societies and Standards Coordinating Committees are not able to provide an instant response to interpretation requests except in those cases where the matter has previously received formal consideration.

Comments on standards and requests for interpretations should be addressed to:

Secretary, IEEE-SA Standards Board
445 Hoes Lane
P.O. Box 1331
Piscataway, NJ 08855-1331
USA

Note: Attention is called to the possibility that implementation of this standard may require use of subject matter covered by patent rights. By publication of this standard, no position is taken with respect to the existence or validity of any patent rights in connection therewith. The IEEE shall not be responsible for identifying patents for which a license may be required by an IEEE standard or for conducting inquiries into the legal validity or scope of those patents that are brought to its attention.

Authorization to photocopy portions of any individual standard for internal or personal use is granted by the Institute of Electrical and Electronics Engineers, Inc., provided that the appropriate fee is paid to Copyright Clearance Center. To arrange for payment of licensing fee, please contact Copyright Clearance Center, Customer Service, 222 Rosewood Drive, Danvers, MA 01923 USA; (978) 750-8400. Permission to photocopy portions of any individual standard for educational classroom use can also be obtained through the Copyright Clearance Center.

Copyright The Institute of Electrical and Electronics Engineers, Inc.
Provided by IHS under license with IEEE
No reproduction or networking permitted without license from IHS
Not for Resale

# Introduction

(This introduction is not part of IEEE Std 492-1999, IEEE Guide for Operation and Maintenance of Hydro-Generators.)

This guide was prepared to set forth operating experience and maintenance practices that have been used successfully over a period of years by several major operators of hydro-electrical equipment. Accompanying the operating and maintenance background has been the input of manufacturers of large electrical equipment, resulting in a combination of experience factors and design philosophy that will provide users with information to guide them in understanding the limits of the equipment and methods that may be employed to reduce downtime to a minimum.

The development of this guide was begun in early 1969, when it was felt that a document similar to IEEE Std 67-1972, IEEE Guide for Operation and Maintenance of Turbine Generators (ANSI C50.30–1972), should be available to operators of hydro-electric equipment. Such a document was considered to be of particular value to organizations normally involved only with turbine-generators, but who had entered the hydro-electric field to meet the increasing energy of peaking needs. To this end, the guide contains some sections devoted to pumped-storage applications. A substantial revision toward the current document was begun in 1987. It is considered desirable that this guide be updated and that the pumped-storage sections be expanded as future needs dictate. Comments are invited on this guide as well as suggestions for additional material that should be included.

## Participants

The guide was prepared by a Working Group of the Synchronous Machinery Subcommittee of the IEEE Rotating Machinery Committee. At the time this guide was completed the working group had the following members:

**D. G. McLaren,** *Chair*

| | | |
|---|---|---|
| R. D. Handel | G. Mottershead | L. Rodland |
| L. F. Klataske | D. J. Parker | D. B. Seely |
| J. F. Lyles | M. Pierce | L. Tauber |
| | J. Quinn | |

The following members of the balloting committee voted on this guide:

| | | |
|---|---|---|
| Kevin D. Becker | Robert Karlicek | Nils E. Nilsson |
| Edward H. Beilstein | James Glen Karolyi | James A. Oliver |
| Steven R. Brockschink | Lyle F. Klataske | David J. Parker |
| Richard S. Coleman | David L. Kornegay | Les Pereira |
| Paul L. Dandeno | Charles A. Lennon | John J. Quinn |
| Hillery R. Davis | Thomas A. Lipo | Laurence Rodland |
| James S. Edmonds | Lawrence D. Long | Alan Roehl |
| Ahmed M. El-Serafi | J. T. Madill | Mulukutla S. Sarma |
| Brian E. B. Gott | Clifford Malm | Manoj R. Shah |
| Randall C. Groves | William R. McCown | Jan Stein |
| Jim H. Gurney | Donald G. McLaren | William W. Terry |
| Thomas J. Hammons | James R. Michalec | Edward T. Voelker |
| Robert D. Handel | Adam Mickevicius | Thomas R. Wait |
| Paul S. Johrde | Louis J. Miller | E. C. Whitney |
| Harry J. Jones | | Khalil N. Zadeh |

Copyright © 1999 IEEE. All rights reserved.

Copyright The Institute of Electrical and Electronics Engineers, Inc.
Provided by IHS under license with IEEE
No reproduction or networking permitted without license from IHS
Not for Resale

The final conditions for approval of this guide were met on 28 January 1999. This guide was conditionally approved by the IEEE Standards Board on 8 December 1998, with the following membership:

**Richard J. Holleman,** *Chair* **Donald N. Heirman,** *Vice Chair*
**Judith Gorman,** *Secretary*

Satish K. Aggarwal
Clyde R. Camp
James T. Carlo
Gary R. Engmann
Harold E. Epstein
Jay Forster*
Thomas F. Garrity
Ruben D. Garzon
James H. Gurney
Jim D. Isaak
Lowell G. Johnson
Robert Kennelly
E. G. "Al" Kiener
Joseph L. Koepfinger*
Stephen R. Lambert
Jim Logothetis
Donald C. Loughry
L. Bruce McClung
Louis-François Pau
Ronald C. Petersen
Gerald H. Peterson
John B. Posey
Gary S. Robinson
Hans E. Weinrich
Donald W. Zipse

*Member Emeritus

Valerie E. Zelenty
*IEEE Standards Project Editor*


Copyright © 1999 IEEE. All rights reserved.
Copyright The Institute of Electrical and Electronics Engineers, Inc.
Provided by IHS under license with IEEE
No reproduction or networking permitted without license from IHS
Not for Resale

# Contents


1. Overview ..... 1

1.1 Scope ..... 1
1.2 Caution ..... 2

2. References ..... 2

3. Manufacturer's and user's responsibility ..... 3

3.1 Intended use ..... 3
3.2 Operating range ..... 3

4. Types of units ..... 4

4.1 General ..... 4
4.2 Mechanical classifications ..... 4
4.3 Cooling classifications ..... 4

5. Basis of rating ..... 5

5.1 General considerations ..... 5
5.2 Mechanical stress limits ..... 6
5.3 Temperature rise ..... 7
5.4 Temperature limits ..... 7
5.5 Methods of temperature measurement ..... 8

6. Loading ..... 11

6.1 Relation of load and temperature rise—Stator and field ..... 11
6.2 Generator characteristic curves ..... 13
6.3 Loading—Active and reactive power relationship ..... 13
6.4 Unusual service conditions ..... 17

7. Operation ..... 18

7.1 General ..... 18
7.2 Starting and loading ..... 23
7.3 Braking and stopping ..... 25
7.4 Load rejection and runaway ..... 27
7.5 Automatic supervision and protection ..... 27
7.6 Unusual or dangerous operation conditions ..... 28
7.7 Cooling systems ..... 32
7.8 Fire protection systems ..... 32
7.9 Vibration detection and correction ..... 33
7.10 Operation of generator/motors ..... 34

8. Maintenance ..... 35

8.1 Introduction ..... 35
8.2 Visual inspection ..... 36
8.3 Routine electrical tests ..... 42



Copyright © 1999 IEEE. All rights reserved.



Copyright The Institute of Electrical and Electronics Engineers, Inc.
Provided by IHS under license with IEEE
No reproduction or networking permitted without license from IHS
Not for Resale

8.4 Investigative tests ..... 52
8.5 Mechanical checks, alignment, and cleaning ..... 57
8.6 Stator winding repair procedures ..... 59
8.7 Extensive downtime—Care of machine ..... 61
8.8 Safety precautions ..... 62

Annex A (informative) Bibliography ..... 63



Copyright © 1999 IEEE. All rights reserved.
Copyright The Institute of Electrical and Electronics Engineers, Inc.
Provided by IHS under license with IEEE
No reproduction or networking permitted without license from IHS
Not for Resale

# IEEE Guide for Operation and Maintenance of Hydro-Generators

## 1. Overview

### 1.1 Scope

#### 1.1.1 Application

This guide covers general recommendations for the operation, loading, and maintenance of synchronous hydro-generators and generator/motors. It does not apply to synchronous machines having cylindrical rotors. In this guide, the term hydro-generator is used to describe a synchronous machine coupled to a hydraulic turbine or pump-turbine. This guide is not intended to apply in any way to the prime mover.

#### 1.1.2 Manufacturer's instructions

This guide is not intended to supplant specific or general instructions contained in the manufacturer's instruction book or in any contractual agreement between the manufacturer and the purchaser of a given machine.

#### 1.1.3 Limitations due to various designs

Equipment manufacturers have taken different approaches to the solution of design requirements; therefore, it is not practical to relate specifically in this guide to all the variations of machine design. However, many of the operational and maintenance procedures and problems are common to all the designs and, therefore, recommendations are given concerning solutions to these procedures and problems. The most that this document can accomplish is to provide guidelines, which, on one hand, disclose accepted and tried values or methods, and on the other hand, give warnings where hazards might be encountered.

#### 1.1.4 Exciters

This guide does not cover in detail associated rotating or stationary excitation systems.

Copyright © 1999 IEEE. All rights reserved.

Copyright The Institute of Electrical and Electronics Engineers, Inc.
Provided by IHS under license with IEEE
No reproduction or networking permitted without license from IHS
Not for Resale

## 1.2 Caution

### 1.2.1 Load conditions beyond design rating

It should be recognized that conditions more severe than those specified by the nameplate, instruction book, or any contractual agreement between the manufacturer and the purchaser should not be applied to the machine. If there is a need to exceed the specified conditions, it should be done only after a thorough study of the various considerations pertinent to the specific condition and also the capabilities of the machine and associated equipment. It is recommended that the situation be discussed with the manufacturer of the machine.

### 1.2.2 Reference publications

Many IEEE and ANSI standards are referenced in this guide. The standards referenced in this revision are those in effect when this guide was approved. Users are cautioned to carefully review the history of older machines with respect to IEEE and ANSI standards in effect at the time the particular generator was manufactured. Older machines may not operate satisfactorily to the requirements of modern standards with regard to temperature rise, overload capability, abnormal operating conditions, etc.

# 2. References

The following standards were used as references in preparing this guide and apply to the machines described in it. When any of the IEEE standards referred to in this guide are superseded by an approved version, the revision shall apply.

ANSI C50.10-1990, Rotating Electrical Machinery—Synchronous Machines.[1]

ANSI C50.12-1982 (Reaff 1989), Requirements for Salient Pole Synchronous Generators and Generator/Motors for Hydraulic Turbine Applications.

IEEE Std 1-1986 (Reaff 1992), IEEE Standard General Principles for Temperature Limits in the Rating of Electric Equipment and for the Evaluation of Electrical Insulation.[2]

IEEE Std 43-1974 (Reaff 1991), IEEE Recommended Practice for Testing Insulation Resistance of Rotating Machinery.

IEEE Std 56-1977 (Reaff 1991), IEEE Guide for Insulation Maintenance for Large Alternating-Current Rotating Machinery (10 000 kVA and Larger).

IEEE Std 95-1977 (Reaff 1991), IEEE Recommended Practice for Insulation Testing of Large AC Rotating Machinery with High Direct Voltage.

IEEE Std 99-1980 (Reaff 1992), IEEE Recommended Practice for the Preparation of Test Procedures for the Thermal Evaluation of Insulation Systems for Electric Equipment.

IEEE Std 100-1996, IEEE Standard Dictionary of Electrical and Electronics Terms.

[1]ANSI publications are available from the Sales Department, American National Standards Institute, 11 West 42nd Street, 13th Floor, New York, NY 10036, USA (http://www.ansi.org/).

[2]IEEE publications are available from the Institute of Electrical and Electronics Engineers, 445 Hoes Lane, P.O. Box 1331, Piscataway, NJ 08855-1331, USA (http://www.standards.ieee.org/).


Copyright © 1999 IEEE. All rights reserved.
Copyright The Institute of Electrical and Electronics Engineers, Inc.
Provided by IHS under license with IEEE
No reproduction or networking permitted without license from IHS
Not for Resale

IEEE Std 113-1985 (Withdrawn), IEEE Guide: Test Procedures for Direct Current Machines.[3]

IEEE Std 115-1995, IEEE Guide: Test Procedures for Synchronous Machines.

IEEE Std 119-1974 (Withdrawn), IEEE Recommended Practice for General Principles of Temperature Measurement as Applied to Electrical Apparatus.[4]

IEEE Std 286-1975 (Withdrawn), IEEE Recommended Practice for Measurement of Power-Factor Tip-Up of Rotating Machinery Stator Coil Insulation.[5]

IEEE Std 421.1-1986 (Reaff 1996), IEEE Standard Definitions for Excitation Systems for Synchronous Machines.

IEEE Std 522-1992, IEEE Guide for Testing Turn-to-Turn Insulation on Form-Wound Stator Coils for Alternating-Current Rotating Electric Machines.

IEEE Std 1147-1991 (Reaff 1996), IEEE Guide for the Rehabilitation of Hydroelectric Power Plants.

## 3. Manufacturer's and user's responsibility

### 3.1 Intended use

A thorough interchange of design requirements should exist between the user and the manufacturer. The user should clearly specify, in addition to the usual nameplate data and machine characteristics, the planned operating modes of the generator in as much detail as possible. Based on industry standards and sound design and operating practice, this information will establish the nameplate rating, temperature limits, and capability curves. The manufacturer is responsible for understanding the requirements and producing a machine to perform as required.

### 3.2 Operating range

Some discussions in this guide involve operation under conditions not covered by nameplate or specification conditions. The purpose of a generator nameplate is to identify the machine with respect to manufacturer and to indicate basic rating as fixed by the purchaser's specification. The temperatures stated on the nameplate are in accordance with applicable industry standards or purchaser's specifications, or both. It should not be assumed that the generator is capable of safe operation up to these temperature levels. The range of safe operation is defined by the generator capability curves. It is important for users to understand and train operators to be familiar with generator capability curves and other characteristics so that safe operating conditions (conducive to long life of the equipment) are maintained.

[3]IEEE Std 113-1985, IEEE Std 119-1974, and IEEE Std 286-1975 have been withdrawn; however, copies can be obtained from Global Engineering, 15 Inverness Way East, Englewood, CO 80112-5704, USA, tel. (303) 792-2181 (global.ihs.com/).

[4]See Footnote 3.

[5]See Footnote 3.

Copyright © 1999 IEEE. All rights reserved.

Copyright The Institute of Electrical and Electronics Engineers, Inc.
Provided by IHS under license with IEEE
No reproduction or networking permitted without license from IHS
Not for Resale

# 4. Types of units

## 4.1 General

This guide applies primarily to vertical hydro-generators, but most of the recommended practices also apply to horizontal hydro-generators. Nearly all of the material concerning hydro-generators will apply also to generator/motors used in pumped-storage systems. A discussion of the operation of generator/motors and a review of the various methods used to start these machines can be found in 7.10.

## 4.2 Mechanical classifications

Vertical hydro-generators are classified mechanically by the position of the thrust bearing with respect to the rotor. The following categories are covered by this guide:

a) *Suspended*. The thrust bearing is located above the rotor and there may be one or two guide bearings, one of which is always above the rotor.

b) *Umbrella*. The thrust bearing is located below the rotor and one guide bearing is located in close proximity to the thrust bearing.

c) *Modified umbrella*. The thrust bearing is located below the rotor and there are two guide bearings, one above and one below the rotor.

## 4.3 Cooling classifications

Hydro-generators are also classified by the cooling method used for the rotor and stator. The categories described in 4.3.1 and 4.3.2 are covered by this guide.

### 4.3.1 Indirectly-cooled types

Indirectly-cooled generators are those in which the heat generated within the windings must flow through the ground insulation before reaching the cooling medium. Cooling air is circulated through passages in the generators by either of the following methods:

a) *Self-ventilated generator.* A self-ventilated generator has cooling air circulated by means integral within the machine.

b) *Separately-ventilated generator.* A separately-ventilated generator has cooling air circulated by an independent fan or blower system external to the machine rotor and stator.

Most indirectly-cooled generators over 10 MVA and built since 1930 are totally enclosed. The enclosure allows the internal cooling air to be circulated in a closed loop through the generator and thence through air-to-water heat exchangers located within the enclosure where the heat created by the generator losses is removed from the air before it returns to the machine.

### 4.3.2 Directly-cooled types

Directly-cooled generators are those in which the coolant for the windings flows in close contact with the conductors so that the heat generated within the windings is transferred directly to the coolant without passing through the ground insulation. Directly-cooled generators are totally enclosed. Internal air will be circulated to cool the rotor winding (if it is not directly cooled) and perhaps the stator core in a manner similar to indirectly-cooled machines.

--`,,`-`-`,,`,,`,`,,`---



Copyright © 1999 IEEE. All rights reserved.
Copyright The Institute of Electrical and Electronics Engineers, Inc.
Provided by IHS under license with IEEE
No reproduction or networking permitted without license from IHS Not for Resale

#### 4.3.2.1 Directly-cooled stators

Directly-cooled stator coils (bars) normally have de-ionized water coolant flowing within hollow strands of the conductor. The heat generated within the conductor flows in either of the following two ways:

a) Directly into the cooling water flowing within the hollow strands.

b) Through thin layers of strand insulation to the hollow strands carrying the water coolant if some solid strands are interspersed between the hollow strands in the coil.

Other winding parts, such as connectors between the coils (bars), parallel rings, main leads, and neutral leads, may or may not be directly cooled by water.

#### 4.3.2.2 Directly-cooled rotors

Directly-cooled rotors normally have de-ionized water coolant fed through manifold piping and down the rotor shaft to radial pipes that connect to coil inlet water boxes. The water coolant then flows axially through hollow field coil conductors or tubing nested in the field coils. The water coolant exits by way of connections to outlet piping at the rotor shaft. A water distributor with seals is necessary to transfer cooling water from the stationary piping to the rotating shaft.

## 5. Basis of rating

### 5.1 General considerations

#### 5.1.1 Rating parameters

Hydro-generators are generally rated on a continuous-duty basis with the net output expressed in kilovolt-amperes (kVA) available at the terminals at a rated speed, frequency, voltage, and power factor. For rated output, the service conditions specified for the machine must be observed. The usual service conditions are specified in ANSI C50.10-1990,[6] including the temperature of the cooling air which shall be between 10 °C and 40 °C. Special generator capabilities and service conditions may have been specified at the time of manufacture. This information is usually found in the instruction book or can be obtained from the manufacturer or the purchase specification.

The generalized standard for hydro-generators is ANSI C50.12-1982. The previous issue of this standard, ANSI C50.12-1965, allowed a dual rating based on a 60 °C temperature rise at the nominal rating and an above 60 °C rise at 115% of the nominal rating. The latest issue recognizes a single maximum rating only at specified temperature rises that are dependent on the voltage rating and class of insulation of the windings.

The generator nameplate or instruction book should always be consulted to ascertain the allowable temperature rise for which the generator in question has been designed. In any case where major rehabilitation is considered or where the basis of rating (including overspeeds and thrusts) may change, refer to IEEE Std 1147-1991.

#### 5.1.2 Loading within capabilities

It is generally recognized that the actual load capability of a hydraulic turbine or the load conditions may not match the nameplate of the generator. When other than rated load and service conditions exist, operation

[6]Information on references can be found in Clause 2.

Copyright © 1999 IEEE. All rights reserved.

Copyright The Institute of Electrical and Electronics Engineers, Inc.
Provided by IHS under license with IEEE
No reproduction or networking permitted without license from IHS
Not for Resale

within the manufacturer's capability curve will maintain temperatures, mechanical stresses, and electrical parameters within design limits.

## 5.2 Mechanical stress limits

### 5.2.1 Coupling, shaft, rotor spider

These parts are usually designed for maximum specified generator kVA at unity power factor, or maximum specified turbine horsepower and hydraulic thrust. They should also be coordinated in design and mechanical load-carrying capability with the turbine shaft.

The design stress limits allow for adequate safety margins to take care of stress concentrations and dynamic loading during short circuits or temporary hydraulic disturbances. However, if loading above the design power output are possible, the gate limits on the turbine should be set so that excessive mechanical overloads are prevented.

If during operation unusual vibrations at some fixed frequency or load condition should develop, the cause and effect should be investigated. This is especially true where there are two or more large rotational inertias on a given shaft as switching or fault transients can overstress shaft system elements or excite torsional natural frequencies.

The first critical speed of the turbine-generator rotating system (the shafts, turbine runner, generator rotor, exciter rotor, and the associated bearings and supports) is usually designed to be above the maximum turbine overspeed or runaway speed (whichever is greater), and thus outside any operating speed.

### 5.2.2 Rotor rim

Rotor rims are designed to have a margin of safety at the maximum specified turbine overspeed. Thus, at rated load and speed, the rim stress and expansion are quite moderate. However, since the rim stress and expansion increase with the square of the speed, even partial overspeeds during load rejections can cause relatively large values of rim stress and expansion. The design margins are such that the occasional partial overspeeds are of no consequence. If in addition to overspeed, additional acceleration forces are present due to unbalanced magnetic pull or vibration, some movement or misalignment of the original rim stack with reference to the spider may occur with a resultant balance shift. Furthermore, if the rim mounting is inadequate to return the rim to center at normal speed, vibration levels may increase. Inspections of rim and associated parts and air gap are recommended especially after an increase of vibration or after a noncontrolled overspeed.

### 5.2.3 Rotor poles

Rotor poles and windings are designed to have a margin of safety at the maximum specified turbine overspeed. The stress levels at rated speed are then relatively low but increase quickly with speed. In general, poles and pole windings should be visually inspected after abnormally high rotational speed transients for any evidence of deformation. Electrical testing should be carried out in any case of doubt.

### 5.2.4 Bearings and bearing brackets

The majority of hydro-generators have vertical shafts and are usually equipped with a segmental, shoe-type thrust bearing and one or two guide bearings. Horizontal shaft units may be similarly equipped.

Thrust bearings are designed to carry maximum specified hydraulic thrust and the weight of rotating parts of the turbine and generator. They are also capable of operating at maximum specified overspeed for a specified length of time without damage. Usually there is a requirement that the oil quantities and bearing design must


Copyright © 1999 IEEE. All rights reserved.
Copyright The Institute of Electrical and Electronics Engineers, Inc.
Provided by IHS under license with IEEE
No reproduction or networking permitted without license from IHS
Not for Resale

be adequate to operate without cooling water for a limited time period. The successful operation of bearings is dependent on a supply of clean cooling water in specified quantities and at temperatures not exceeding the temperature specified for that bearing design.

Thrust bearing brackets are designed for the total steady-state hydraulic thrust and weight of rotating parts with the deflection limited to a certain value. Due to this deflection limitation, stresses in the bracket are usually low. If, however, high transient thrust conditions or vibration forces are present during operation, the bracket and its component parts should be investigated for load capability, elevation setting, deflection, and possible resonance.

### 5.2.5 Stator frames

Stator frames and soleplates are designed for maximum short-circuit capability, and the tangential stresses at rated load are thus quite low. However, should a three-phase, two-phase, or single-phase short circuit occur, or if the machine is synchronized more than 30° out-of-phase, the machine and its foundation should be inspected for possible damage. Loosening of the torque dowels or keys at the soleplates may allow the stator to shift horizontally and thus unbalance the air gap, resulting in increased unbalanced magnetic pull in the offset direction. It is necessary for large diameter stators to move radially on the soleplates with temperature changes to minimize stator core buckling, and foundation and structural stresses. The dowels or keys therefore should be in such condition as to allow this expansion but not allow circumferential or lateral motion.

## 5.3 Temperature rise

The observable temperature rise of a machine component is defined as the difference between the maximum observable temperature of the component and the average temperature of the cold coolant (air in indirectly-cooled machines or water in directly-cooled machines).

ANSI C50.12-1982, Clause 5 and Tables 1 and 2 specify the limiting observable temperature rises, which must not be exceeded when the generator is operating at or below nameplate rating. (Note that these temperature rises do not necessarily apply to machines designed prior to 1982.) These standards should not be construed as specifying allowable temperature rises without regard to machine rating. Thus, if the observable temperature rise of a generator is below the standard value at rated load, it does not mean that the generator load can be increased above the capability curve until the limiting temperature rise listed in the standard is reached. Refer to 7.7.4 for operational monitoring for directly-cooled machines.

## 5.4 Temperature limits

### 5.4.1 Insulation and temperature

The stator and field windings, stator core, stator and field leads, and generator bearings are subject to thermal aging or effects of differential expansion, or both. Therefore, the maximum temperature rise limits for most of these parts have been established.

The stator and field winding insulation system classes are defined in Clause 6 of ANSI C50.10-1990. IEEE Std 1-1986 discusses the general principles upon which the insulation system temperature limits are based.

### 5.4.2 Hot-spot temperature

For normal life expectancy, generator loading should be so controlled that the hot-spot temperatures of the machine windings do not exceed the limiting temperatures of the insulation systems. In most cases, the hot-spot temperatures cannot be measured directly and therefore realistic additions must be made to the maximum observable temperatures in order to estimate the hot-spot temperature. The generator manufacturer

Copyright © 1999 IEEE. All rights reserved.

Copyright The Institute of Electrical and Electronics Engineers, Inc.
Provided by IHS under license with IEEE
No reproduction or networking permitted without license from IHS
Not for Resale

should be consulted to establish the relationship between the observable temperature and the hot-spot temperature.

#### 5.4.3 Thermal aging

The thermal aging of insulation systems and generator parts is a function of the hot-spot temperature and the duration of that temperature. See 7.1.3.1 for an expanded discussion of this subject.

### 5.5 Methods of temperature measurement

The commonly used methods for determining temperatures in each portion of the machine with some general limitations are described in 5.5.1 through 5.5.6.

#### 5.5.1 Limitations in the methods of measuring temperatures

It should be recognized that there are limitations in the methods of measuring temperatures. Therefore, to minimize error and to ensure safe operation of large generators, the reliability and accuracy of temperature indicating, recording, and computing devices are of paramount importance.

Whereas the instruments themselves might be calibrated and accurate, problems may arise from the long distance, bad connections, and stray fields between the sensing element [thermometer bulb, resistance-type detector (RTD), or thermocouple] and the indicating or recording devices.

When acceptance tests are run on a new machine, there is usually a good opportunity to compare panel instrument readings with those from laboratory instruments used for testing. Any significant differences should be investigated and inaccuracies should be corrected.

Most of the common problems and sources of error are discussed in IEEE Std 119-1974 and in 6.4 through 6.9 of IEEE Std 115-1995.

#### 5.5.2 Ambient temperatures

In accordance with 5.2 of ANSI C50.12-1982, the temperature of the ambient cooling air for open ventilated machines is the average temperature of the external air entering the ventilating openings of the machine.

For totally enclosed water-air-cooled machines, the temperature of the cooling air is the average temperature of the air leaving the coolers.

Alcohol or mercury thermometers, thermocouples, or RTDs are generally used to measure cooling air temperature for acceptance testing. For operational monitoring of air temperature, thermocouples, RTDs, or filled system thermometers are most commonly used.

In large machines with several ventilating openings or coolers, the ambient air temperature usually varies with the location. The mean value of these temperatures is used as the basis for temperature rise calculations and the indicator reading closest to the mean value should be used for operational monitoring. (See 6.6 of IEEE Std 115-1995, and Clause 7 of IEEE Std 119-1974.)

#### 5.5.3 Stator winding

##### 5.5.3.1 Indirectly-cooled stator windings

For conventional air-cooled machines, embedded RTDs between the upper and lower coil sides (Figure 1) are recommended and are most commonly used to measure stator winding temperature.


Copyright © 1999 IEEE. All rights reserved.
Copyright The Institute of Electrical and Electronics Engineers, Inc.
Provided by IHS under license with IEEE
No reproduction or networking permitted without license from IHS
Not for Resale

The description, size, and location of RTDs is given in Clause 5 of ANSI C50.10-1990. While RTDs are preferred, since they indicate the mean temperature of the coils over a length of several core packs, the use of thermocouple-type detectors is also recognized as an acceptable practice.

The accuracy of the temperature readings is limited by various factors. For indirectly-cooled machines the detector is separated from the copper by the insulating wall of the coil (Figure 1) and therefore will always indicate lower temperatures than the hot spot of the copper. The difference between the hot-spot temperature and the sensor temperature is a function of the insulation wall thickness, proportions of the slot, the amount of heat to be conducted through the insulation, and several other factors.

These factors have been taken into account in the design of the machine per ANSI C50.12-1982 to ensure that the actual hot-spot temperature does not exceed the limiting temperature of the stator insulation class. If the observable temperature rise of the detector is lower than the guaranteed value, it does not mean that a margin for overloading exists.

The use of radiation-type temperature sensing equipment can sometimes be used as a diagnostic tool for initial survey of the unit and for future maintenance for detecting hot individual coils, coil connections, and circuit rings.

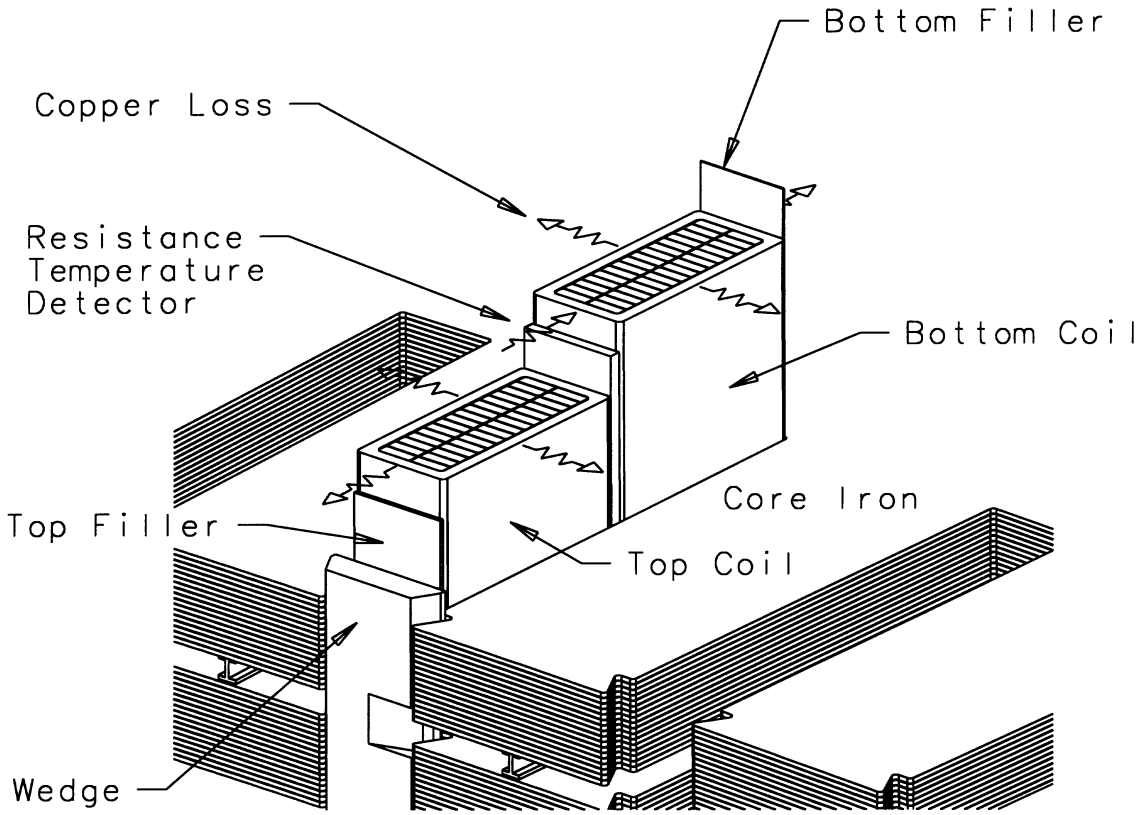


**Figure 1—Heat flow and typical temperature detector location**

### 5.5.3.2 Directly-cooled stator windings

In the case of directly-cooled units, the coolant enters one end of a stator coil at a low temperature, passes through one or more coils, and discharges at a higher temperature, thus causing the copper to have a similar temperature pattern. In this case, the embedded detectors may indicate either higher or lower than the

Copyright © 1999 IEEE. All rights reserved.

Copyright The Institute of Electrical and Electronics Engineers, Inc.
Provided by IHS under license with IEEE
No reproduction or networking permitted without license from IHS
Not for Resale

temperature of the insulated copper of the winding, depending upon their location within the winding and the relative temperature of the teeth and core at that point. Thus their value is to serve as a means of detecting unexpected temperature changes, which usually signal the beginning of trouble.

The difference in temperature between stator winding strands and the coolant is a consistent function of load, permitting the temperature of the warm discharge coolant to serve as a dependable means of determining the hot-spot temperature by use of appropriate curves or calculations. Measurement of the warm discharge coolant temperature is, therefore, generally employed in preference to the use of detectors embedded between coils in the slot. Either an RTD or a thermocouple-type temperature detector is commonly used. For liquid-cooled windings these coolant temperature detectors are mounted at the ground potential end of the insulating hoses at the warm coolant discharge.

The temperature difference between the discharge coolant and the hot spot varies widely for different machines. This difference depends on the coolant liquid, winding construction, and design practice, and may be specified for a given design as a function of load.

### 5.5.4 Stator core

For stator cores the thermometer or detector method of measurement is specified in ANSI C50.12-1982, Clause 5, Table 1. The thermometer is defined in 5.1.1 of ANSI C50.10-1990 and 6.4.2 of IEEE Std 115-1995. Stator core temperatures can also be monitored using noncontact thermal imaging devices.

Usually the stator core temperatures are measured during acceptance testing by applying an alcohol thermometer or a thermocouple at the back of the core. Sometimes a thermocouple (occasionally an RTD, which requires much more space) has been embedded permanently in the tooth or yoke portion of the core during stacking operations. In this case, continuous monitoring of the core temperature is feasible. An embedded thermocouple will generally indicate a higher temperature than a surface-mounted detector. It is difficult in advance to know where the core hot spot will occur but if the unit is operating above rated voltage or at low power factor (either overexcited or underexcited) it can be useful to observe the core temperature to avoid overheating of the coil insulation surface.

Measurement of the maximum stator core temperatures with an embedded detector may be limited since it is very difficult to make provisions for mounting of the detector and to know in advance which part of the core will have the maximum temperature. The stator coil temperature is usually more critical from the operating point of view than the core. Stator bore surface damage or slot iron damage may create local warm or hot conditions, but it is unlikely to be detected by local temperature instruments unless they have been specifically installed in damaged areas.

### 5.5.5 Rotor windings

#### 5.5.5.1 Field windings

The resistance method (as defined in 5.1.2 of ANSI C50.10-1990 and 6.4.4 and 3.3 of IEEE Std 115-1995) is used for acceptance testing and operational monitoring of field winding temperature. It should be recognized that this method measures the average temperature of the field winding and not the hot-spot temperature.

In order to determine the field temperature accurately with the resistance method, it is important to measure the voltage drop across collector rings accurately without including the voltage drop of the brushes supplying the field current. For acceptance testing, this is usually accomplished with insulated brushes that do not carry any field current and do not have an established surface film with significant voltage drop.

--`,,`-`-`,,`,,`,`,,`---



Copyright © 1999 IEEE. All rights reserved.
Copyright The Institute of Electrical and Electronics Engineers, Inc.
Provided by IHS under license with IEEE
No reproduction or networking permitted without license from IHS
Not for Resale

For operational monitoring, the insulated brushes do not always work consistently due to rapid film buildup. In this case, elimination of the insulated brush plus practical methods of brush drop compensation are as follows:

a) Provide a bias voltage equal to the brush drop (about 3 V).

b) Calibrate the temperature indicating device for a value of field winding resistance plus the equivalent resistance of the brush voltage drop at full-load field current.

Both of these methods generally have adequate accuracy for day-to-day operation and may be calibrated to be accurate near full-load conditions.

Hot-spot temperatures are seldom important except on some wire-wound field coils on small machines or on some encapsulated coils where a special allowance can be made.

On water-cooled field windings the manufacturer's method of temperature determination and cooling must be followed.

#### 5.5.5.2 Amortisseur windings

The amortisseur windings in the pole faces are generally designed to thermally withstand negative sequence current transients with an equivalent $I_2^2t$ equal to or less than 40 (see Clause 6 of ANSI C50.12-1982) and a continuous $I_2$ of either 5% or 10%. If temperature measurement of the amortisseur bars and connection rings is necessary for some special operating condition, this might be adequately accomplished with special tests by using a series of temperature-sensitive paints. The range and interval of these paints should be chosen to correspond to the expected temperatures. The maximum design temperatures for amortisseur windings are established by the manufacturer with regard to the duty cycle and mechanical stresses involved and could be in the order of 300 °C. Thus the temperature-sensitive paints could be chosen with approximately 25 °C intervals and still have adequate accuracy for the purpose. Harmonic load currents will also affect amortisseur temperatures. Noncontact thermal imaging sensors can be used to monitor amortisseur temperatures.

### 5.5.6 Collector rings

The thermometer method after shutdown (see 6.8 of IEEE Std 115-1995) is used to determine the collector ring temperature. If this is done at various field current loadings then a curve of collector ring temperature versus field current can be established as an operating guide. Infrared or optical temperature measuring instruments, or temperature-sensitive paints may also be useful in determining collector ring temperatures. Total temperature should be maintained within the class of insulating materials used.

## 6. Loading

### 6.1 Relation of load and temperature rise—Stator and field

The hydro-generator nameplate and capability curves define the limits of operation for which the machine has been designed.

#### 6.1.1 Lower than specified temperatures

When operating within the above-defined condition of electrical output and cooling medium, many machines will operate below the guaranteed temperature rises that are stated on the nameplate. The reason for this is that the observable temperature rise alone does not constitute the only basis for the design of a generator. Other factors that influence design include hot-spot temperature (as discussed in 5.4.2, 5.4.3,

Copyright © 1999 IEEE. All rights reserved.

Copyright The Institute of Electrical and Electronics Engineers, Inc.
Provided by IHS under license with IEEE
No reproduction or networking permitted without license from IHS
Not for Resale

5.5.3.1, 5.5.3.2, and 5.5.5.1), strength of metals and insulating materials, magnitudes of forces due to thermal expansion and vibration, margins for safety, reliability, load cycling, and design prediction accuracy. Thus in a balanced design, the temperature rise of stator and field winding at rated load might be below the guaranteed value in order to ensure reasonable life expectancy and trouble-free operation.

### 6.1.2 Temperature versus load

If heat runs have been performed on a generator at several load points (preferably three) of stator and field current at rated voltage, then the observed temperature rises can be plotted as functions of stator and field current. The rise is roughly a function of the current squared as shown in Figure 2, and provides a convenient operating guide to estimate the temperature rises and total temperatures for various load and coolant conditions. It may also serve as a guide for any change in machine condition. See IEEE Std 115-1995.

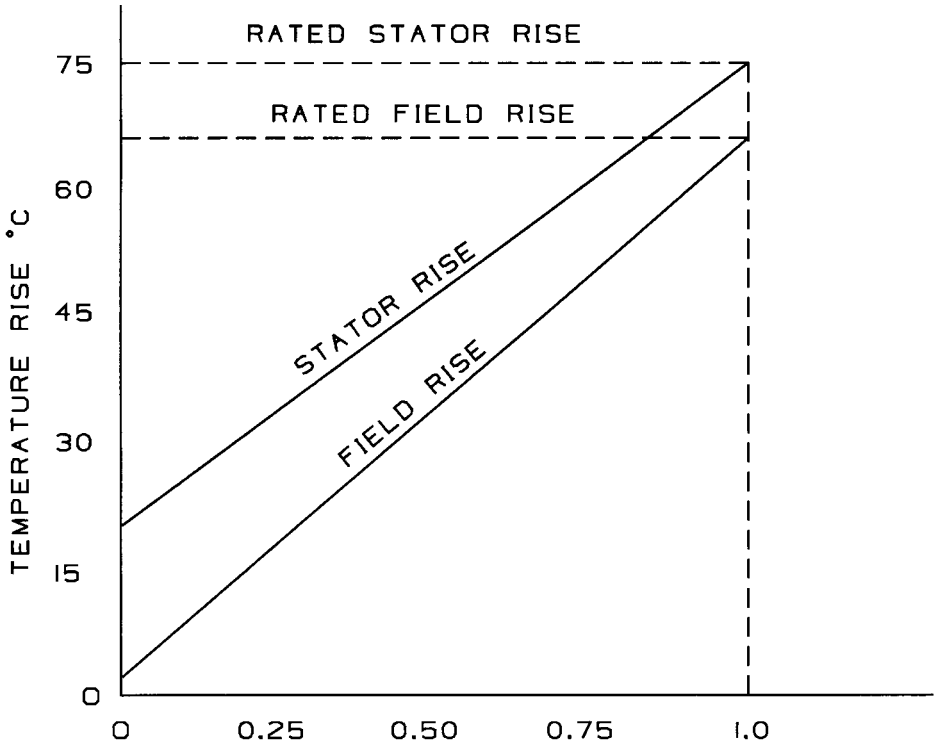


NOTE: Values along the abscissa correspond to $\left(\frac{\text{field current}}{\text{rated field current}}\right)^2$ or to $\left(\frac{\text{stator current}}{\text{rated stator current}}\right)^2$

**Figure 2—Typical temperature rise vs. stator and field current squared**

### 6.1.3 Temperature and variation

Ideal loadings from the standpoint of maximum life expectancy for the generator insulation system are those that result in minimum temperature variations of the winding or core at the lowest recommended temperature level.


Copyright © 1999 IEEE. All rights reserved.
Copyright The Institute of Electrical and Electronics Engineers, Inc.
Provided by IHS under license with IEEE
No reproduction or networking permitted without license from IHS
Not for Resale

### 6.1.4 Temperature control using cooling water

For varying load conditions on totally enclosed, indirectly-cooled machines, temperature control can be partially achieved by adjusting cooling water flow to regulate the cold air temperature. This should be adjusted seasonally to minimize average winding temperature. During operation, the cooler discharge air should not exceed 40 °C nor fall below 10 °C. Low flow adjustments should be made cautiously to avoid stopping flows in some tubes with resultant expansion problems for the tubes.

In the case of extremely low cooling water temperature, it may be necessary to throttle the water flow to avoid excessive condensation at the coolers. Excessive condensation will only occur if there is a water leak in the piping, foundation, or coolers, or if a small to moderate amount of fresh moist air is continuously admitted to the machine enclosure with the dew point above the cooling water temperature. Throttling the water will only help if the fresh air into the housing has a dew point below the water temperature in the coolers and there are no water leaks.

### 6.1.5 Temperature control using air flow

Open machines usually do not have means of controlling the inlet air temperature. For machines that have control dampers and means of recirculation of air, the discussion in 6.1.4 applies. It may be necessary to throttle the cooling air flow, if dampers are provided, to avoid extremely low inlet air temperatures or condensation.

### 6.1.6 Temperature control for directly-cooled machines

For machines having directly-cooled stator windings, the maximum outlet temperature of the coolant must be controlled so as to be kept below its boiling point at high loads and above the dew point of the cooling air at low loads and low coolant temperatures. Temperature controls should be adjusted to minimize thermal cycling of copper strands within the ground insulation of the winding.

## 6.2 Generator characteristic curves

Generator characteristic curves define the relationship between kVA output, field current, stator current, and terminal voltage. They are useful in determining the required load setting to avoid overloading beyond the rating of the machine. Typical curves are shown in Figures 3 through 5.

The saturation curve (Figure 3) gives the relationship of terminal voltage, stator current, and field current. Load characteristic (Vee) curves (Figure 4) indicate the ac line current as a function of field current for various power factors at rated voltage. The capability curve (Figure 5) indicates the envelope of maximum output limit on loading in terms of power in kilowatts and reactive power in kilovars at rated voltage with other limitations for various regions of operation.

## 6.3 Loading—Active and reactive power relationship

In a system with several generators in parallel, the principal effect of a change in excitation on one generator will be to vary the amount of reactive current supplied or absorbed by that machine. Increasing the excitation will make a generator supply more overexcited reactive power, and decreasing the excitation will cause it to supply less reactive power or absorb it.

Copyright © 1999 IEEE. All rights reserved.

Copyright The Institute of Electrical and Electronics Engineers, Inc.
Provided by IHS under license with IEEE
No reproduction or networking permitted without license from IHS
Not for Resale

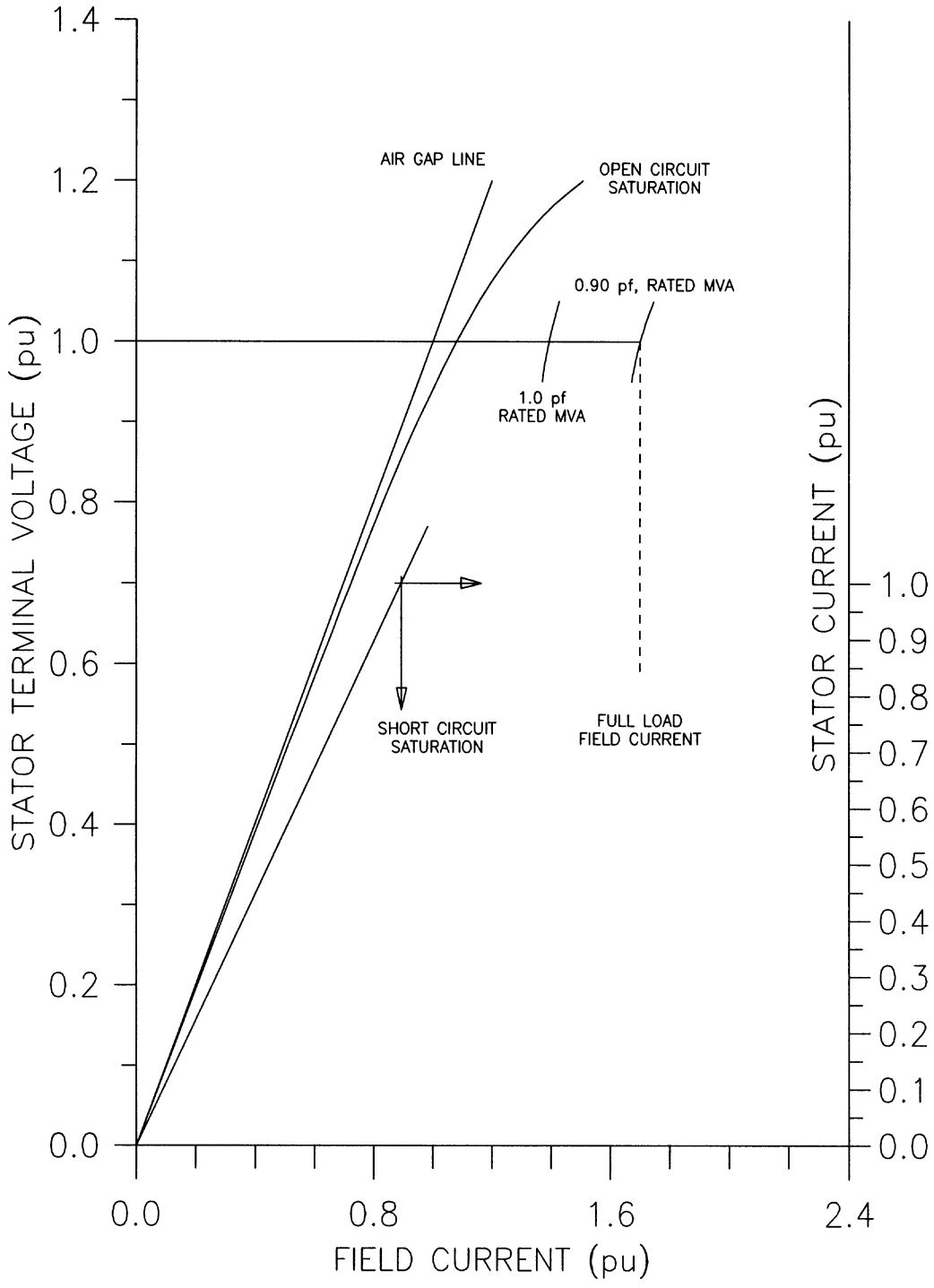


**Figure 3—Typical hydro-generator saturation curves**



Copyright © 1999 IEEE. All rights reserved.
Copyright The Institute of Electrical and Electronics Engineers, Inc.
Provided by IHS under license with IEEE
No reproduction or networking permitted without license from IHS
Not for Resale

### 6.3.1 Field current

Typical load characteristic curves related to power factor are shown in Figure 4. These are useful in analyzing the relationship between field current or stator current, kVA, and power factor. As can be seen from this figure, when a generator is operated at lower than rated power factor overexcited, the field current required is higher than that required for rated load, the field winding will operate at a higher temperature, and the current may exceed the capability of the excitation system.

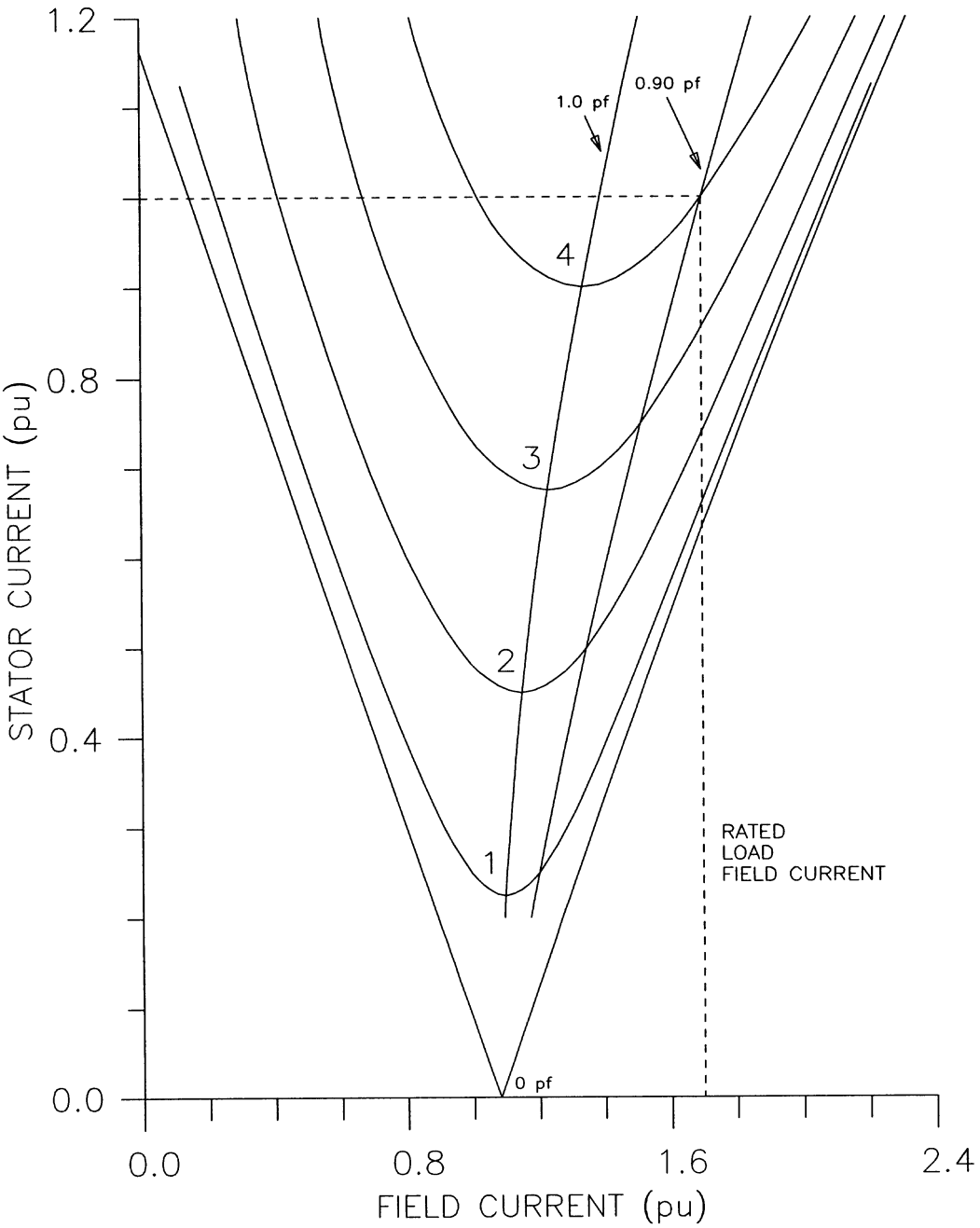


**Figure 4—Typical hydro-generator vee curves**

Copyright © 1999 IEEE. All rights reserved.

Copyright The Institute of Electrical and Electronics Engineers, Inc.
Provided by IHS under license with IEEE
No reproduction or networking permitted without license from IHS
Not for Resale

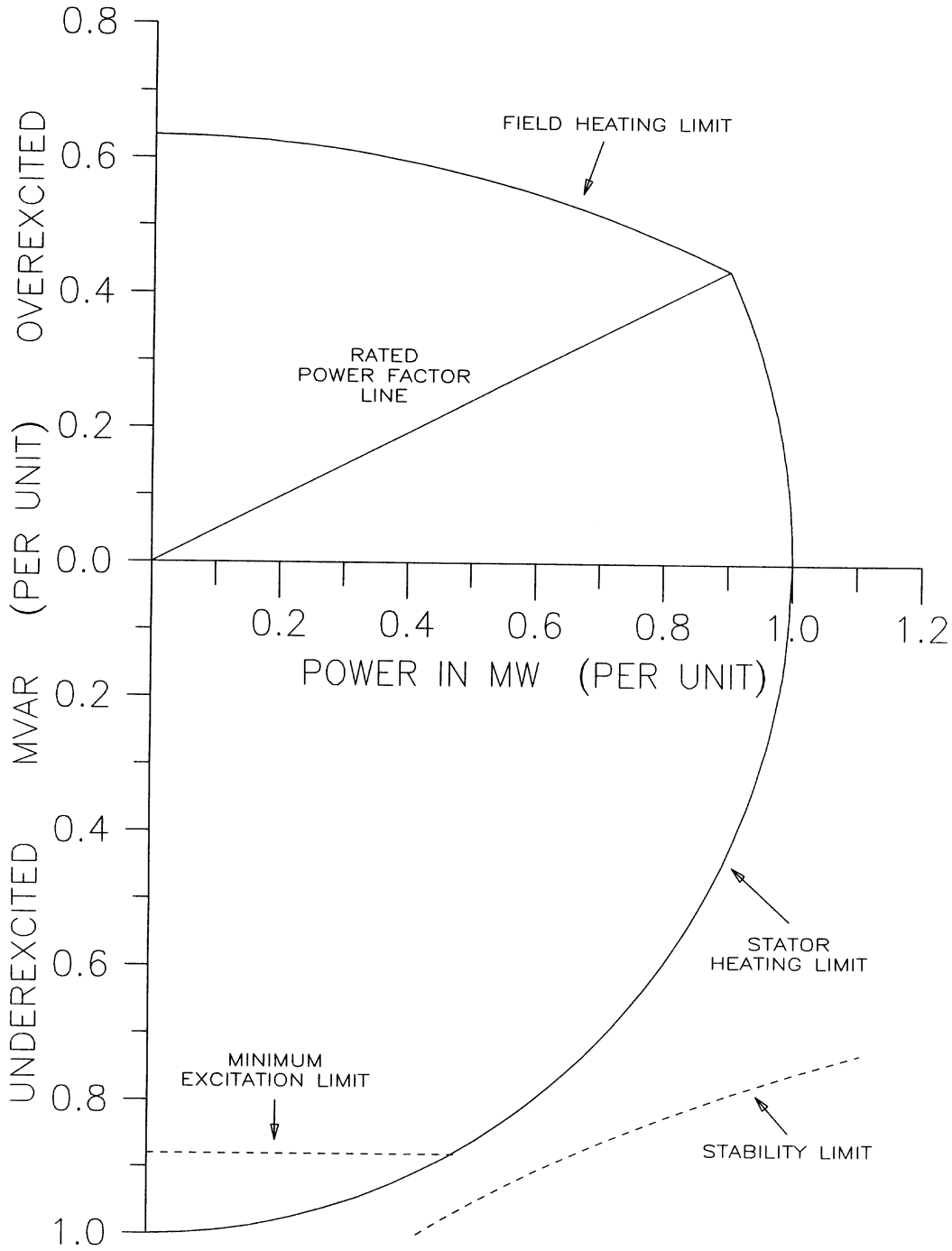


**Figure 5—Typical hydro-generator capability curve (0.9 power factor, rated voltage)**

### 6.3.2 Capability curve limitations

The relationship between power in kilowatts and reactive power in kilovars is apparent from the capability curve in Figure 5. The area inside the curve constitutes the allowable operating region without exceeding the generator rating in respect to stator or rotor heating and other design considerations. Because of system parameters (impedances, transformer taps, etc.), it may not be possible to load the machine to the ratings permitted by the capability curves.


Copyright © 1999 IEEE. All rights reserved.
Copyright The Institute of Electrical and Electronics Engineers, Inc.
Provided by IHS under license with IEEE
No reproduction or networking permitted without license from IHS
Not for Resale

### 6.3.3 Characteristic curves

The characteristic curves and permissible loadings are specific for each generator. It is, therefore, recommended that the applicable curves for each generator be obtained from the instruction book or the manufacturer. The absolute maximum operating limits for each generator should be determined by the user for the guidance of the operator.

## 6.4 Unusual service conditions

It may be necessary to operate a generator under the following conditions:

a) At rated kVA but other than rated voltage. Refer to 6.4.1 and ANSI C50.12-1982.

b) At rated kVA but other than rated frequency. Refer to 6.4.1. ANSI does not provide for this condition.

c) Above rated kVA but normal voltage and frequency. Refer to 6.4.2.

d) Above rated kVA, voltage, and frequency. Refer to 6.4.2.

e) Short-time abnormal conditions. Refer to 6.4.3 and ANSI C50.12-1982.

### 6.4.1 Operation near rating

All generators built in accordance with ANSI C50.12-1982 are capable of operating at rated kVA, frequency, and power factor at any voltage not more than 5% above or below rated voltage, but not necessarily in accordance with the standards of performance established for operation at rated voltage. If operation beyond these limits is necessary, the manufacturer should be consulted. Operation at other than rated frequency is quite unusual and any large deviation (more than 2% of rated frequency) should be discussed with the manufacturer. However, the volts per hertz ratio (per unit voltage/per unit frequency) should be kept within ±5%.

### 6.4.2 Limits for older designs

Large and high-voltage hydro-generators built in accordance with ANSI C50.12 prior to the 1982 issue for Class B insulation and 60 °C rise may be operated up to 115% of rated load at rated power factor, frequency, and voltage with the stator and rotor in excess of 60 °C. For this operation, it is recommended that the ambient be kept as low as possible to ensure maximum insulation life, but above the 10 °C minimum. See also 6.1.3, 6.1.4, 6.1.5, and 7.1.3.1.

As a general rule, and since all hydro-generators have somewhat differing characteristics and actual temperature and stress margins, it is advisable to discuss any planned operation beyond the rating of the generator with the manufacturer to establish safe limits. Additional tests may have to be conducted to substantiate the possibilities for higher than rated loadings. Machines built per ANSI C50.12-1982 are maximum rated with no overload. The comments of 6.1.3, 6.1.4, 6.1.5, and 7.1.3.1 also apply to these machines.

### 6.4.3 Transient, unbalanced, or harmonic currents

Short-circuit capabilities and short-time-current unbalance requirements are specified in ANSI C50.12-1982. That standard also specifies continuous-current unbalance requirements.

For other unusual conditions such as harmonic current loadings, etc., the industry standards do not make any specific provision. Each such case should be discussed with the manufacturer to establish safe limits with regard to expected life of the machine.

Copyright © 1999 IEEE. All rights reserved.

Copyright The Institute of Electrical and Electronics Engineers, Inc.
Provided by IHS under license with IEEE
No reproduction or networking permitted without license from IHS
Not for Resale

# 7. Operation

## 7.1 General

This clause describes a practical method of operating hydro-generators.

### 7.1.1 Requirements for operation

Operation of a hydro-generator requires consideration of several different factors, some of which are described in 7.1.1.1 through 7.1.1.5.

#### 7.1.1.1 Stator winding temperature

Stator winding temperature indications are useful in providing a continuous record of the temperature history of the unit. Any trend away from past temperature performance is an indication of a change in machine condition and should be investigated.

Instruments used at the switchboard for measuring the temperature of the stator winding by resistance detector operate on the basis of change in resistance of the detector element. The instruments may be made to record the temperatures of a large number of detectors on a continuous recording meter or indicate the temperatures on a common meter with a selector switch to connect the individual RTDs. It is common practice to provide multi-point recorders or use computers with adjustable alarm contacts. Stator core winding temperatures can also be monitored using noncontact thermal-imaging devices.

#### 7.1.1.2 Field winding temperature

Operation at power factors less than the rated value in the overexcited region is limited by rotor winding temperature. In this region the full-rated kVA of the generator cannot be realized due to this limitation. Any operation method must recognize this limitation. (See Figure 5.)

#### 7.1.1.3 Stator core temperature

Operation in the underexcited region is sometimes limited by overheating in the extreme ends of the stator core where temperatures are not detected by usual stator winding temperature detectors. Excessive heating of the core ends is more of a problem in machines that have magnetic clamping fingers. In some machines with nonmagnetic fingers, flux concentrations around the stator end turns may cause undesirable core and coil heating. If a machine is to be operated underexcited for long periods of time, a heat run should be made and core end temperatures should be checked. Such operation can be compared to limits shown on calculated capability curves. Noncontact thermal-imaging devices may also be used.

#### 7.1.1.4 Collector ring temperature

Brush and collector ring performance are dependent on collector ring temperatures. Periodic checks for abnormal temperatures are therefore recommended.

If field temperature is recorded it can also be useful in detecting collector ring brush problems. Indications of erratic changes of the temperature (when measured by field resistance through the brushes) can be caused by brush arcing due to uneven or low brush pressure. It may also indicate dangerous field continuity conditions. Incipient collector ring flashover may be indicated. See 8.2.1.7 concerning brush maintenance.


Copyright © 1999 IEEE. All rights reserved.
Copyright The Institute of Electrical and Electronics Engineers, Inc.
Provided by IHS under license with IEEE
No reproduction or networking permitted without license from IHS
Not for Resale

#### 7.1.1.5 Stator differential expansion

The capability of the stator winding is limited not only by total temperature and winding vibration, but also by the effects of differential expansion between the stator coils and the stator core. Differential expansion is a function of the total and differential temperatures of the winding and the core and the respective coefficients of linear expansion. This factor is more critical in machines with long cores (over 1700 mm). During load changes the copper temperature changes more rapidly than the core temperature, thus accentuating this differential expansion problem. It may be desirable to limit the rate of large load changes to minimize differential expansion. Generally, damage to insulation systems that is believed to result from stator differential expansion is not a frequent occurrence.

### 7.1.2 Use of capability curves

A typical generator capability curve is shown in Figure 5. Similar curves applicable to the particular generator should be used to guide its operation.

The operation of the generator according to the capability curves may be accomplished by the use of instruments to measure active and reactive power, terminal voltage, line current, and when available, field current. Generators are usually operated between rated power factor overexcited and unity power factor. In this range the generator can be controlled by maintaining prescribed values for the terminal voltage and line current since the stator winding heating limits the load. Standard ac generators will operate successfully at rated kVA load, within ±5% of rated terminal voltage at safe temperatures. See 6.4.1.

#### 7.1.2.1 Method of determining overexcited and underexcited limits

The overexcited portion of the capability curve in the region between the unity power factor and rated power factor lines is determined by the stator winding temperature rise. The overexcited portion between the rated power factor line and zero power factor is determined by the field winding temperature rise. The underexcited portion of the curve is limited by the following four factors:

a) Stator winding temperature rise.
b) Stator core end heating as discussed in 7.1.1.3.
c) Minimum excitation conditions.
d) System stability limit as discussed in 7.l.2.2.

#### 7.1.2.2 Methods of computing system stability limit

The system stability limit can be computed in the following manner.

The steady-state power angle curve (Figure 6) may be calculated by means of Equation (1) for a machine connected to an infinite system through a series reactance such as a transformer and a small line reactance. This is the most common terminal condition. Steady-state stability for other terminal conditions such as a large induction motor load or transient stability is beyond the scope of this guide, and for these situations a text on the subject should be consulted.

Copyright © 1999 IEEE. All rights reserved.

Copyright The Institute of Electrical and Electronics Engineers, Inc.
Provided by IHS under license with IEEE
No reproduction or networking permitted without license from IHS
Not for Resale

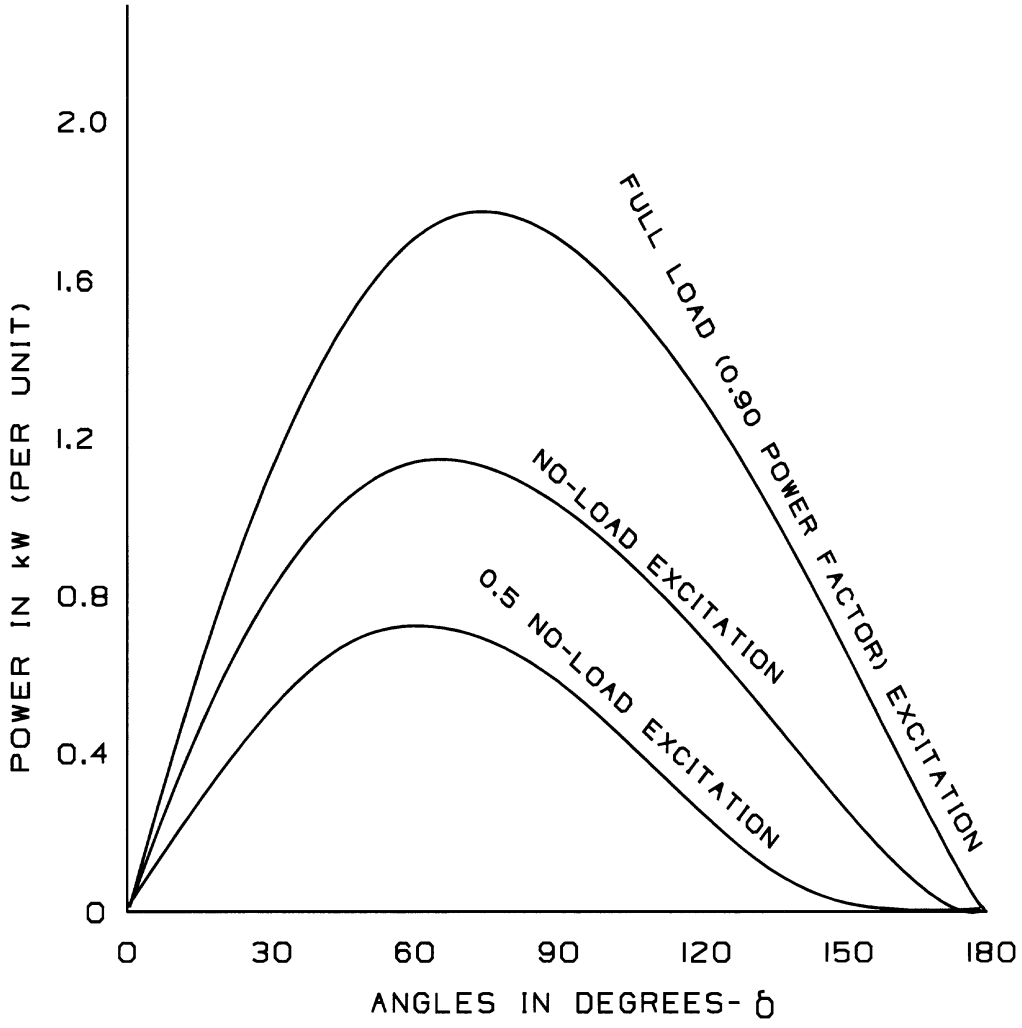


**Figure 6—Typical steady-state power angle curve**

$$P = \frac{E_d E \sin\delta}{X_d + X_e} + \frac{(X_d - X_q)E^2 \sin 2\delta}{2(X_d + X_e)(X_q + X_e)} \quad (1)$$

where

$P$ is per unit power (kilowatts) where 1.0 is rated kVA;
$E_d$ is per unit excitation (actual excitation) / (excitation at rated voltage on the air gap line);
$E$ is per unit system voltage;
$X_d$ is per unit direct-axis synchronous reactance;
$X_q$ is per unit quadrature-axis synchronous reactance;
$X_e$ is per unit reactance between machine and infinite system;
$\delta$ is angle between machine rotor and infinite system.

Steady-state underexcited capability follows Equation (1) with the excitation $E_d$ reduced to a fraction of the no-load value. As the peak of the power angle curve approaches the output of the turbine, the margin to ride through small system disturbances decreases to zero. Transient capabilities may allow momentary perfor-


Copyright © 1999 IEEE. All rights reserved.
Copyright The Institute of Electrical and Electronics Engineers, Inc.
Provided by IHS under license with IEEE
No reproduction or networking permitted without license from IHS
Not for Resale

mance beyond this point, but will not permit continuous performance without shifting excitation or terminal voltage, or both, to a stable steady-state condition. At zero excitation, some load may be carried due to rotor saliency (second term of the equation).

A small negative excitation can be used when this capability is available in the excitation system, but when the first term is equal and opposite to the second term, the machine will slip a pole with no power input and the excitation controls are likely to force the excitation to a negative ceiling with no corrective action available except tripping the unit and resynchronizing.

Unfortunately the turbine output is often nonuniform enough at very small outputs so that negative excitation does not often provide satisfactory operation. Minimum excitation devices should be set in accordance with the manufacturer's recommendations, which will provide some steady-state margin for normal situations.

### 7.1.3 Operation at 115% rating

Large and high-voltage hydro-generators and reversible generator/motor units built in accordance with ANSI C50.12-1965 were designed to be operated at 115% load at rated power factor, frequency, and voltage with temperature rises in excess of normal standards for these machines. In some cases, values for stator and field winding temperature rises may have been agreed upon in the contractual stage.

When operated at loads above rated conditions, it is recommended that the ambient temperature be kept as low as possible by use of maximum cooling water to ensure maximum usable life.

Machines built per ANSI C50.12-1982 are rated on a different basis and have no overload capability and are applied differently with respect to the turbine capability.

#### 7.1.3.1 Correlation of overloading with reduction of insulation life (for units per ANSI C50.12-1965 and earlier)

Operation at overload conditions with consequently higher temperatures than those specified in the appropriate standards can cause an appreciable reduction in service life of insulation.

Temperature is not the only criterion since the life of the insulation system is also influenced by other factors such as endurance under electrical and mechanical stress, vibration, exposure to moisture, chemicals, etc.

Other factors being equal, however, thermal degradation (an endothermic process) is accelerated as the temperature is increased. For most of the insulating materials currently in use in hydro-generators, the life is an exponential function of the reciprocal of the absolute operating temperature over a limited range of temperatures. Evaluation of thermal aging by a system of temperature indices is advocated in IEEE Std 1-1986.

An approximate rule in assessing the effects of continuous operation at overload conditions is that the insulation life would be decreased by one-half for each l0 °C rise in temperature above the standard value for the class of apparatus involved. This appears to be a valid rule for both older insulation systems and for more recently developed insulating systems using synthetic resins. Present indications are, however, that the resin-based systems may be much more durable and for practical purposes it can be inferred that they are considerably less sensitive to elevated temperatures that are near to accepted operating limits.

### 7.1.4 Bearings

Another major factor to be considered in the operation of a hydro-generator is the performance of the bearings.

Copyright © 1999 IEEE. All rights reserved.

Copyright The Institute of Electrical and Electronics Engineers, Inc.
Provided by IHS under license with IEEE
No reproduction or networking permitted without license from IHS
Not for Resale

#### 7.1.4.1 Variations in design

The close coordination of the thrust bearing with other elements in the mechanical design of the hydro-generator coupled with the particular type supplied by the manufacturer makes it impractical to attempt to cover all details of thrust bearing operation and maintenance. It is important to carefully follow the instructions and recommendations of the manufacturer. The thrust bearing is regarded as of prime importance in the mechanical considerations of the vertical hydro-generator, and much attention has been given to its design and manufacture to ensure efficient and reliable service.

#### 7.1.4.2 Types of bearings

Principal types of thrust bearings used for vertical hydro-generators are the adjustable pivoted shoe, self-equalizing pivoted shoe, spherical, and spring supported. Thrust bearings support the weight of the rotating parts of the generator and the turbine plus the load imposed by the water passing through the hydraulic turbine. The principal elements of the thrust bearing are the rotating runner and the stationary shoes. The runner receives the load through a massive hub called the thrust block. Depending on the type of hydro-generator, the thrust block may be integral with the shaft or is attached to the shaft and suitable for removal when disassembling the machine.

#### 7.1.4.3 Maintenance considerations

Considerations that apply to operation and maintenance of all types of thrust bearings are as follows:

a) Using the specified lubricating oil.
b) Maintaining clean uncontaminated oil.
c) Maintaining proper oil level.
d) Periodically checking the bearing insulation and grounding brush.
e) Maintaining the flow of the cooling medium.
f) Checking the temperature of bearings.

#### 7.1.4.4 Clean oil

The care required to maintain clean oil is of special importance for bearings equipped for high-pressure lubrication during the starting period since the oil is fed directly to the center of the bearing shoe and small particles of foreign material could be forced into the oil film.

#### 7.1.4.5 Oil level

Most vertical hydro-generators are equipped with high and low oil level indicators, which function to give an alarm or to initiate shutdown of the unit if the proper oil level is not maintained. High oil levels are sometimes caused by water leaks in the oil cooler mounted in the oil reservoir. A leak in the oil cooler can also cause a low oil level when the discharge water piping is arranged so that there is a suction head at the cooler.

Other oil level problems might involve inherent differences between the static fill level and the running oil level and changes to oil level piping. The truest indication of bearing pot oil level results when the level indicating device is vented back to the top of the oil pot.

#### 7.1.4.6 Shaft voltage

All bearings (on the side of the generator rotor opposite the turbine) have insulation fitted in the bearing base to prevent the circulation of possibly damaging current through the bearings. A principal source of such currents is induced shaft voltage. Shaft voltages are most often a result of some asymmetry in the magnetic circuit of the machine, which causes some net flux linkage with the rotor shaft that induces a voltage in it. These voltages are alternating at a multiple of system frequency and are low, usually less than l5 V. If there is


Copyright © 1999 IEEE. All rights reserved.
Copyright The Institute of Electrical and Electronics Engineers, Inc.
Provided by IHS under license with IEEE
No reproduction or networking permitted without license from IHS
Not for Resale

a continuous low impedance path from the shaft ends through the bearings and base, the current produced by the shaft voltage may be l00 A to several thousand amperes and enough to rapidly damage the bearing. Terminals for checking the installed bearing insulation resistance are sometimes provided. Generators with no bearings above the rotor (opposite the turbine) do not require bearing insulation. However, any fittings or apparatus at this end of the machine that might contact the shaft in any way or during high vibration must be insulated.

#### 7.1.4.7 Static excitation shaft voltage

On units with a static excitation supply, a shaft grounding brush may be supplied immediately below the rotor. Static excitation can supply a small current to the rotor through capacitive coupling between the field coils and the poles. While the shaft is usually grounded through the water in the turbine, the brush is additional insurance when operating unwatered. Such brushes are not normally sized for large currents from faults.

#### 7.1.4.8 Disassembly and reassembly

Should the occasion arise where disassembly of the generator is required to the extent of dismantling the thrust bearing, it is recommended that the work be done only by qualified and experienced mechanics in accordance with the manufacturer's recommendations. Loads on the segmental shoes must be equalized upon reassembly on all but the self-equalizing and spring-supported types. Calibrated strain gauges in the bearing support structure will assist in accurately loading shoes. Refer also to 8.4.8.4.

#### 7.1.4.9 Changes in temperature

After startup and initial running, the bearings will usually operate at a constant temperature that will vary slightly with variation in load and the cooling water temperature. Any increase in bearing operating temperatures could be a sign of metallic contact, which may precede bearing failure. Changes taking place in bearing oil, cooling system, or hydraulic thrust should be investigated as soon as possible. Bearing temperatures can also be sensitive to excessive runout or shaft vibration. In these cases, the nature of the movement should be analyzed. It may be attributable to balance, turbine transients, or poor air gap shape and concentricity.

### 7.2 Starting and loading

This subclause does not provide complete instructions on starting hydro-generators, but rather details some important aspects of this phase of operation.

#### 7.2.1 Normal startup

In starting, sufficient breakaway torque (turbine gate opening) should be applied to start the machine rapidly to establish an oil film. Thereafter, the rate of speed increase to full speed is a matter of concern only in respect to the hydraulic flow conditions and is immaterial in respect to the generator. Machines having thrust bearings equipped with a high-pressure lubrication system are usually capable of a slow start, such as a synchronous start of a generator/motor (pumped-storage) unit.

#### 7.2.1.1 Starting sequence

Generators that differ as to method of cooling and as to excitation require proper establishment and sequence of operation of the associated auxiliary equipment in accordance with the manufacturer's recommended procedures. Sequences such as release of brakes, establishment of the high-pressure oil film to the thrust bearings when so equipped, and, in some instances, concern for the start of water flow downstream, are other important considerations.

Copyright © 1999 IEEE. All rights reserved.

Copyright The Institute of Electrical and Electronics Engineers, Inc.
Provided by IHS under license with IEEE
No reproduction or networking permitted without license from IHS
Not for Resale

#### 7.2.1.2 Initial start

For the first start of a new machine or if any work has been done on any connections that involve synchronizing, correct phase rotation and proper operation of the synchronizing instrumentation must be verified.

#### 7.2.1.3 Synchronizing

Accuracy in the act of synchronizing is required. The standards do not require generators to be designed to withstand currents and mechanical forces due to incorrect phasing or incorrect synchronizing. In general, the synchronizing accuracy should be such that the phase angle between the generator and the bus voltage should not be greater than 15° at the moment of closing of the synchronizing breaker.

In judging the synchronizing point, the breaker closing time must be considered as well as the difference in frequency between the generator and the bus. It is preferable that the generator speed and phase angle be ahead of the bus at the moment of synchronizing so that some positive generating load is immediately established.

### 7.2.2 Emergency starting

Under ordinary circumstances, a generator is shut down after the load has been reduced to zero and the generator is disconnected from the system. An emergency start would be considered a start immediately after a normal shutdown or after a shutdown and lockout due to protective relay operation. Generator/motor mode change would not be considered as emergency starts.

#### 7.2.2.1 Thrust bearings without high-pressure lift

The principal concern of an emergency start of a hydro-generator is the operation of the thrust bearing. When the thrust bearing is not equipped with a high-pressure oil lubrication system, the conservative practice is to avoid a start immediately after shutdown from prolonged operation with the bearing hot, since hot oil or distorted shoe surfaces may interfere with establishment of an adequate oil film. Some types of thrust bearings should be allowed to cool for an hour or two before restarting the hydro-generator. It is widely accepted that no damage is likely to occur if the babbitt face temperature is less than 45 °C. The manufacturer should be consulted for more specific recommendations.

#### 7.2.2.2 Units with high-pressure lift

The precautions regarding starting a unit while the thrust bearing is hot do not apply to a unit equipped with a high-pressure lubrication system since an oil film is established with the application of the high-pressure oil between the bearing shoe surface and the bearing runner.

### 7.2.3 Starting after extensive maintenance or downtime

After an extensive shutdown period, it is desirable to make a thorough inspection of the machine and associated equipment before starting. Preventative maintenance checks on operation of auxiliary equipment such as breakers, protective relays, water control valves, brakes, and similar devices will be helpful in returning the generator to reliable service promptly. Depending on the nature of the outage, a test of the generator windings may be advisable to be certain that the insulation resistance is satisfactory or if a dry out of the windings is required before energizing the machine.

#### 7.2.3.1 Jacking

If the unit is not equipped with a high-pressure lubrication system, the unit should be lifted momentarily off the thrust bearing with the jacks to re-establish an oil film on the bearing shoes and the runner prior to


Copyright © 1999 IEEE. All rights reserved.
Copyright The Institute of Electrical and Electronics Engineers, Inc.
Provided by IHS under license with IEEE
No reproduction or networking permitted without license from IHS
Not for Resale

starting. It is essential to check that the bearing shoes release from the runner plate. Stripper plates facilitate this action. Refer to the manufacturer for specific recommendations.

#### 7.2.3.2 Insulation resistance

Insulation resistance tests of the windings may serve as an indication of the condition of the generator insulation and its suitability for dielectric testing or normal operation. Insulation resistance test results can be used to determine if dry out of the windings is necessary before proceeding with testing or operation.

Tests are most useful in the establishment of a historical record of the insulation resistance of the windings. Periodic tests made at a fixed winding temperature are helpful in indicating progressive or unusual deterioration of the generator insulation. They also serve as a guide for the desired insulation resistance level for a machine that may have had an extended downtime period. See IEEE Std 43-1974.

If the suitability of the winding is in question, a dielectric test may be performed. The winding may be tested using either ac or dc high-potential equipment. See 8.3. The dielectric test voltage applied should be in accordance with IEEE Std 56-1977 and the method employed in making the test should be in accordance with IEEE Std 115-1995.

For rotating exciters, the method employed in making the dielectric test should be in accordance with IEEE Std 113-1985.

### 7.2.4 Recommended rates of loading

Hydro-generators are capable of rapid loading rates and flexibility in load adjustment. When needed to meet system demands, the generator can be loaded at very rapid rates limited only by the action of the governor, the hydraulic turbine, and the hydraulic conditions.

It should be recognized, however, that such rapid loading produces strains within and between the machine components, which ultimately affect the service life of the machine. Rapid loading, and particularly, frequent rapid load changes, should be reserved for emergency situations or for machines specifically designed to accommodate such operation.

#### 7.2.4.1 Fast temperature changes

Heat producing parts of a generator, primarily conductors, are cooled most effectively when the surrounding parts (core, insulation, and cooling medium) are at low temperatures. What could be harmful is differential expansion when conditions change rapidly. For example, a core that is abnormally hot with relation to the surrounding stator frame tries to expand diametrically but is constrained by the stator frame from doing so.

#### 7.2.4.2 Slow loading

A conservative method of loading the generator is to apply the load in increments so as to attain full rated load in 45–60 min after the initial load application. This allows a reasonably steady and distributed increase of heating of the generator parts and tends to lessen thermal shock to individual parts. After the generator temperatures have stabilized at their normal levels, subsequent incremental load changes may reasonably be made at higher rates of change, while recognizing that their frequency and magnitude will affect winding life.

## 7.3 Braking and stopping

Similar to the considerations for starting, the stopping or shutdown procedures for hydro-generators are influenced by requirements of the hydraulic turbine.

Copyright © 1999 IEEE. All rights reserved.

Copyright The Institute of Electrical and Electronics Engineers, Inc.
Provided by IHS under license with IEEE
No reproduction or networking permitted without license from IHS
Not for Resale

### 7.3.1 Normal stopping

Normal stopping sequences proceed after the load has been removed from the generator and the generator has been disconnected from the system. The hydraulic turbine gates are closed and the generator is allowed to decelerate to a speed that will minimize brake shoe wear and brake plate distortion. The brakes are then automatically applied either continuously, or in on and off cycles of about 20 s duration. Emergency brake application may be at a predetermined higher speed but never above 50% speed.

The lowest brake initiation speed commensurate with a reasonable time to zero r/min minimizes brake dust generation and distortion effects. Brake sequences may require adjustment if brake materials are changed.

#### 7.3.1.1 Brake application

When the unit has been braked to approximately 20% speed, the brakes should be applied continuously until the unit comes to rest. In some instances water leakage through the gates is sufficient to cause the generator to creep or revolve very slowly after it has been brought to rest and the brakes have been released. Thrust bearing damage may result from lack of lubrication on slow rotation. To prevent creeping, the brakes would have to remain applied or the intake valve would have to be closed during the shutdown period. Generators can be equipped with a creep detection system designed to give an indication when this condition exists and to initiate alarms or high-pressure lift.

#### 7.3.1.2 Bearing high-pressure lift during shutdown

Generators equipped with a high-pressure oil lubrication system on the thrust bearing usually have that system restarted when the generator speed drops to between 20% and 30% of synchronous speed and kept on until after the generator comes to rest.

#### 7.3.1.3 Brake dust

One important consideration of the braking operation is the periodic maintenance required to prevent an accumulation of brake shoe dust on the interior parts of the generator. Since the brake ring and brake shoe mechanisms are usually located in the interior of the generator, some of the brake residue caused by the braking operation is picked up by the rotor fans and carried to windings of the machines. If allowed to accumulate over a prolonged period, it may affect the cooling and electrical isolation of the generator windings.

### 7.3.2 Emergency stopping

Emergency stops, which usually are initiated through operation of protective relays, are combined with prompt rejection of load and rapid closing of the turbine gates. The gate closure time is a function of the governor setting, the permissible penstock pressure rise, and other hydraulic considerations. When the generator is being stopped with the gates closed and with the turbine immersed in water, the water assists in stopping the generator. A Pelton turbine may be equipped with a braking jet to assist in stopping; however, stopping time of the unit is usually longer than with other types of hydraulic turbines.

### 7.3.3 Operation of brakes and jacks

On vertical hydro-generators the function of braking and jacking often is served with one assembly. The braking operation uses compressed air, normally at about 690 kPa, applied to the brakes. For normal operation, the braking of the generator is an automatic operation initiated by speed switches on the generator.

#### 7.3.3.1 Jacks

The jacking function uses oil supplied from either a manually operated pump or a motorized pump. Release of the jacks permits the oil to flow back to the oil sump. The generator and turbine manufacturer's instruc-


Copyright © 1999 IEEE. All rights reserved.
Copyright The Institute of Electrical and Electronics Engineers, Inc.
Provided by IHS under license with IEEE
No reproduction or networking permitted without license from IHS
Not for Resale

tions detail the permissible maximum jacking lift of the rotor. This value is relatively small, in the order of 0.375–0.625 in (9.5–16 mm), and therefore requires careful attention when jacking the rotor to prevent damage to the machine. Appropriate blocking should be used in any situation where the rotor is jacked and maintenance is planned or underway.

### 7.3.4 Dynamic braking

Dynamic braking can be used when very rapid stopping of a generator is a usual requirement. Dynamic braking consists of loading the generator with a resistance load after the unit is separated from the system and the shutdown sequence of the generator is initiated. The rotational energy of the generator is dissipated in the resistance load connected to the generator terminals. The rate of deceleration is a function of the value of the resistance load and pertinent generator characteristics. Most probable use of dynamic braking for a hydro-generator unit is to make a rapid change of generation to pumping mode in a pumped-storage installation. The electrical forces incident to dynamic braking are less than those associated with short circuits and are well within the capability of the generator. Dynamic braking can also be used with hydro-generators for improvement of stability by controlling the rate of divergence during transient power system swings. The generator remains connected to the system and the additional resistance load is added at the proper time during system disturbances.

## 7.4 Load rejection and runaway

The characteristics of hydro-generator operation under conditions of load rejection or runaway are determined by the hydraulic turbine characteristics, the governor settings, and the combined rotational inertia of the installation. While the hydro-generator is designed to withstand the runaway speed of the turbine, it is recognized that prolonged operation at this speed is undesirable and should be avoided. Under ordinary conditions of load rejection by generators, the governor acts to close the turbine gates rapidly enough to hold the speed of the generator to well below full runaway speed. Wicket gate closing times are controlled by the need to prevent high-pressure transients in the hydraulic circuit. In the event of governor or wicket gate failure, the penstock head gate, turbine inlet valve, or other control must be closed to prevent sustained runaway.

## 7.5 Automatic supervision and protection

Hydro-generators are well suited to completely automatic supervision of operation and protection for long periods of time. Although the range of hydro-generator ratings in terms of kVA, voltage, speed, power factor, and other characteristics is very large, the inherent reliability of its construction and operation makes the automatic and remote control of the machine practical.

### 7.5.1 Protection

Suitable protective devices are available to prevent or minimize damage to the generator under all expected operating conditions. These devices are arranged to give an alarm or to initiate an emergency shutdown of the generator when specific limits of operating criteria are reached. The extent of the protection desired for a particular generator depends upon such factors as importance of the machine, age, type, and rating. Usually a suitable compromise can be made.

### 7.5.2 Winding protection

Protective devices for the stator winding that will initiate removal of the generator from the system, de-energize the excitation, and in some cases begin the rapid shutdown sequence of the hydraulic turbine are usually provided for the following conditions:

a) Balanced and unbalanced faults beyond the generator breaker (backup relay operation).
b) Balanced and unbalanced faults up to and including the generator breaker.
c) Insulation failure of the winding.

Copyright © 1999 IEEE. All rights reserved.

Copyright The Institute of Electrical and Electronics Engineers, Inc.
Provided by IHS under license with IEEE
No reproduction or networking permitted without license from IHS
Not for Resale

### 7.5.3 Field winding protection

Protective devices for the field winding that may be used to initiate the removal of the generator from the system or to give an alarm only are usually provided for the following conditions:

a) Open circuits in the field winding (loss of field relay).
b) Short circuits in the field winding (excessive vibration or motion relay).
c) Ground in the field circuit.

### 7.5.4 Usual protection

Other conditions for which protective devices may be provided to remove the generator from the system or to give an alarm are as follows:

a) Overcurrent in stator or field.
b) Overtemperature in stator or field.
c) Overvoltage in generator stator.
d) Overvoltage in field.
e) Excessive unbalanced stator current (negative sequence).
f) Excessive unbalance of current in stator parallel circuits.
g) Fire or smoke.
h) Loss of cooling water for air or oil coolers.
i) Overtemperature of bearings.
j) Overtemperature of cooling air.
k) Low or high oil level for bearings.
l) Machine vibration.

## 7.6 Unusual or dangerous operation conditions

Operation under the following abnormal conditions requires careful observation of performance of the machine so that it can be shut down immediately, if necessary, to prevent damage.

### 7.6.1 Unbalanced loading

Unbalanced stator currents may be the result of an unbalanced load, of unequal induced voltages in the stator, or of a long unbalanced transmission line between the machine and its load. ANSI C50.12-1982 requires that a generator be capable of withstanding without injury the effects of continuous-current unbalance corresponding to a negative sequence not exceeding 5% for salient pole generators with nonconnected amortisseur windings, or 10% for connected amortisseur windings. The percentage values are in percent of stator current at rated kVA. Additional provisions are that rated kVA should not be exceeded and that the maximum current does not exceed 105% of rated current in any phase.

While this guide does not apply to generators built to standards prior to 1982, it does give some guidance as to the magnitude of unbalance that could be tolerated. Specific cases should be referred to the manufacturer for recommendations.

If there have been unbalanced currents in the stator for a long period of time, or an unbalanced fault is approaching or exceeding $I_2^2t$ of 40, then inspection of amortisseur connections and joints at the pole should be made if possible to determine if damage has occurred. This inspection is particularly important for machines having nonconnected amortisseur windings. Refer to 8.2.1.6 item i) for inspection.


Copyright © 1999 IEEE. All rights reserved.
Copyright The Institute of Electrical and Electronics Engineers, Inc.
Provided by IHS under license with IEEE
No reproduction or networking permitted without license from IHS
Not for Resale

### 7.6.2 Operation with stator coils cut out

Some generators may be operated successfully with one or more stator coils cut out and bypassed. Slower speed generators having several hundred coils with a large number of coils per parallel circuit may operate satisfactorily with several coils cut out, though this is usually a temporary condition and should be closely monitored. The manufacturer's recommendation should be sought as to the number of coils that can be cut out, and requirements to cut out coils in other circuits for balancing. Stator and rotor vibration may increase and should be checked carefully. The unbalanced magnetic pull may cause a vertical machine rotor to pull or skate more to one side than is normal, with consequent possible effects on guide bearings. In a multi-path generator this is more likely to occur if the individual paths are concentrated in circumferential sectors instead of being distributed around the bore. Differential relays may require moderate desensitizing in order to prevent tripping due to increased path and circulating currents. Such relays will continue to provide protection.

The embedded RTDs may not respond to the temperatures associated with the increased currents if they are not located in the affected circuits. Stator core temperatures can also be monitored using noncontact thermal-imaging devices. Operation conditions brought about by cutting out coils may require limiting the machine load to less than rated kVA or restricting the load cycling service, or both. (See 8.6.3.)

### 7.6.3 Operation with winding paths cut out

A few generators with less than 10 coils per path may be operated successfully with a winding path cut out. Naturally, only generators having several paths per phase lend themselves to this. Such operation should only be attempted when compelling maintenance problems prevent immediate full repairs. The manufacturer's advice should be obtained concerning whether derating will be greater with a path cut out or with a path in service lacking a coil or two. (Circulating currents affect the latter.) Current transformers associated with some split winding differential relay schemes may require auxiliary current transformers to achieve acceptable balanced conditions. Comments in 7.6.2 may apply in some cases. Operation with any coils cut out increases the duty on the amortisseur and increases pole face heating and vibration. In a few cases it is thought to have caused bar breakage and wear in the slot, as well as bar heating.

### 7.6.4 Asynchronous operation (field maintained)

Operation of a generator out-of-synchronism with partial or full-field excitation maintained, places the most severe type of duty on the unit. Such operation produces heavy surge currents in the stator windings whose magnitude may exceed those associated with the machine short-circuit requirements of ANSI C50.12-1982 and cause serious damage to the winding. Such operation also produces torque reversals that create in many parts of the unit high mechanical stresses of magnitudes that may be several times those produced by rated torque. High induced voltages and currents in the field may cause flashover of the field coils to ground, the collector rings, and of the commutator of an associated exciter and thyristors in static exciters.

For these reasons, although it may be difficult to detect the out-of-synchronism machine, it must be identified promptly and the condition must be remedied. Possible corrective action includes removal of the unit from the system without reclosure. Amortisseur winding damage can be expected if slip frequency operation is prolonged.

### 7.6.5 Loss of field excitation

Complete loss of excitation on an operating generator results in dangerous overheating of its rotor within a few seconds unless the machine is disconnected from the system. The degree to which this heating will occur depends on the initial load on the generator and the manner in which the generator is connected to the system. When excitation is lost, the generator tends to overspeed and operates as an induction generator. This overspeed normally results in a reduction in load due to the characteristics of the turbine and governor, an increase in stator current associated with low voltage at the generator terminals, and high rotor currents.

Copyright © 1999 IEEE. All rights reserved.

Copyright The Institute of Electrical and Electronics Engineers, Inc.
Provided by IHS under license with IEEE
No reproduction or networking permitted without license from IHS
Not for Resale

These rotor currents will flow through the field winding (provided the field circuit is not open), and also through the amortisseur windings and rotor pole faces. The amortisseur winding and rotor pole face currents will cause high and possibly dangerous temperatures in a few seconds.

Some users utilize a loss-of-field relay to trip the generator breaker, thereby removing the unit from the system. This may also initiate closure of the turbine water inlet valves or gates. Some users provide alarm indication only. The manufacturer may require that the unit be tripped if the load is more than 15%. Time can often be saved by running back the turbine inlet water valves or gates to a speed no-load position and, following precautionary checks, restoring excitation and re-synchronizing the system.

Where neither loss-of-field tripping nor alarm indication is provided, the operator must recognize the condition and manually perform the functions described for the relay above. If the loss-of-field condition has persisted for some considerable or unknown length of time, the rotor should be inspected before operating again.

### 7.6.6 Operation with field circuit grounded

Usually the field winding and all of its excitation supply circuit is operated as a completely ungrounded system. On such an ungrounded system the existence of a single ground at any point in the system may not interfere with the normal operation of the generator.

Upon indication of this initial ground, it is advisable to shut down the machine to identify the fault because the ground may be the result of arcing across an open circuit, or field copper migration. The majority of ground faults, however, will be caused by weakness in the ground insulation. It is advisable to correct this problem promptly, because if another ground should occur at some point in the generator field circuit, it may prove serious. When a double ground exists, part of the field winding will be shorted out through the rim and pole pieces. This condition will cause a magnetic unbalance that may result in vibration sufficient to damage the machine. The use of vibration detection and protection equipment would ensure instant knowledge of such a condition and disconnect the machine quickly. Loss of field-relay protection cannot be depended upon to trip the generator in this case because its operation is based upon a change in reactive power, and the change caused by a partially shorted field may not be sufficient to actuate the relay.

### 7.6.7 Field forcing by voltage regulator

Continuous-acting, fast-response voltage regulators used with exciters having high ceiling voltages are employed by many users to improve power system stability. At times of prolonged system low voltage, this automatic equipment can impose a severe overload upon both the field and stator windings. For any particular case, the manufacturer should be consulted to determine the maximum time the overload condition can be permitted. Automatic means should be provided to relieve the overload at the end of this time and return the machine to its maximum permissible continuous load and field current.

### 7.6.8 Operation in cold ambient temperatures

Maintaining a low ambient temperature results in lower total temperature of the windings at all loads, less expansion of the metal parts, and less drying out of the gaskets. In the case of generators cooled with air supplied from out of doors, it sometimes is not readily practicable to control the temperature of the cold coolant, which means that at low ambient temperature, it may be necessary to throttle the cooling airflow if it is desired to avoid condensation on the generator surfaces exposed to warm room air. The hot-spot temperature should be kept as low as reasonably possible all year with as low an inlet air temperature as the coolers can maintain.

In the case of totally enclosed generators, it may be found advantageous to regulate the cooling water flow to the heat exchanger in such a manner as to result in cold coolant temperatures lower than the normal value. In such a case, it is usual to have the cold air temperature not less than 10 °C when the unit is loaded.


Copyright © 1999 IEEE. All rights reserved.
Copyright The Institute of Electrical and Electronics Engineers, Inc.
Provided by IHS under license with IEEE
No reproduction or networking permitted without license from IHS
Not for Resale

With either manual or automatic regulation, the control points should be chosen in accordance with the manufacturer's recommendations. Cold coolant temperature that is too low may be detrimental to some insulation systems and may produce undesirable effects on the mechanical balance of the unit. Within recommended limits, it is desirable to maintain as low a temperature as possible.

In view of the lower losses at low generator loads, the generator hot-spot temperature variation will be reduced by varying the coolant temperature inversely with the load. This method of operation would effect some saving in cooling water flow at low loads. This is not to be interpreted as a recommendation to operate the generator at a constant hot-spot temperature. See 6.l. Reduction of cooling water flow more than 50% might cause unequal flow between cooler sections and non-uniform flow between tubes in one cooler section, resulting in possible tube leaks.

In order to maintain all parts of open-ventilated, air-cooled generators at a safe temperature, it may be found advantageous to furnish heaters in the generator during periods of shutdown. Remove the heaters from service whenever the unit is on line.

Since the air coming out of the cooler is at the lowest temperature in the air circulation cycle, moisture frequently condenses and collects at the bottom of coolers. This is a normal occurrence and is not undesirable except for the nuisance of resulting corrosion.

Water flow to the bearing oil coolers should be shut off when the unit is not in operation. Extremely cold water can cause local viscosity problems.

### 7.6.9 Hazards of operation during initial installation

A number of conditions should be carefully observed during the initial installation and operation period including the following.

#### 7.6.9.1 Insulation strength

Insulation dielectric strength should be checked, particularly for moisture, by means of insulation resistance and dielectric absorption tests. High potential proof or acceptance tests are usually performed before the machine is placed in operation. If necessary, the machine should be dried out by means of space heaters or controlled low-voltage current. Means should be provided for expelling the moisture-laden air from the machine housing if coolers are not in service to condense it.

#### 7.6.9.2 Rotor balance

Rotor unbalance should be measured and corrected, if necessary, by the addition of appropriate balancing weights.

#### 7.6.9.3 Vibration

Machine vibration should be observed to be sure it is within normal limits.

#### 7.6.9.4 Temperatures

Machine temperatures including stator winding, rotor winding, bearing shoes, and bearing lube oil should be observed. If any are out of normal limits, such things as cooler operation, blocked ventilation passages, and lube-oil system operation, should be checked.

Copyright © 1999 IEEE. All rights reserved.

Copyright The Institute of Electrical and Electronics Engineers, Inc.
Provided by IHS under license with IEEE
No reproduction or networking permitted without license from IHS
Not for Resale

#### 7.6.9.5 Noises

Unusual noises should be investigated for possible mechanical defects or looseness and corrected immediately to prevent more serious damage.

#### 7.6.9.6 Unbalance currents

Split-phase currents should be monitored, where applicable.

## 7.7 Cooling systems

Generators having cooling systems should have the following taken into consideration.

### 7.7.1 Initial filling of coolers

When initially filling the coolers, the flow of cooling water should be controlled so that the entire cooler will be vented and filled with water at a rate such that the design pressure will not be exceeded due to water hammer.

### 7.7.2 Normal cooler operation

The flow of water to coolers consisting of several sections should be controlled so that the entire cooler will be filled with water by continuous venting and so that design pressure will not be exceeded. With multisection coolers that are in parallel for water flow, which is the usual arrangement, care must be exercised to equalize the water flow through the sections. This should be done by the use of flowmeters or pressure gages on the water flow to the sections. Positive pressure should be maintained on the cooler system water to avoid vacuum boiling, water hammer, and air being drawn into the cooler vent valves.

### 7.7.3 Automatic cooling water systems

There is no inherent lower limit in the power loading of a generator itself, although the prime mover and associated equipment may impose such a limit. When operating at loads varying from a low value up to a rated full load, the desired degree of cooling system control depends on the time duration and extent of the load swings. Where load swings are more or less unpredictable and irregular, some form of automatic regulation of the cooling water may be advantageous. Users should employ caution in the installation and operation of such automatic regulation, particularly where sediment is present, because valve malfunction or pipe blockage may result in local overheating of the unit.

### 7.7.4 Direct cooling

The systems to be monitored for directly-cooled machines will likely include embedded RTD temperature, cooling water temperatures, cooling water flow, and cooling water conductivity. The designer has a large degree of latitude to adjust these individual systems to attain the optimum total design. Therefore, it is imperative that complete, specific instructions be obtained from the manufacturer for each direct cooling system, and operation and maintenance procedures should be developed in accordance with these instructions.

## 7.8 Fire protection systems

Fire protection systems are provided to ensure that burning of combustible components (usually after an electrical fault) does not persist and cause secondary damage. Rapid disconnection from the system, interruption of the excitation circuit, snuffing action from windage, and self-extinguishing properties of materials all play a part in extinguishing fires. Designs take advantage of these and often provide an extinguishing


Copyright © 1999 IEEE. All rights reserved.
--`,,`-`-`,,`,,`,`,,`---
Copyright The Institute of Electrical and Electronics Engineers, Inc.
Provided by IHS under license with IEEE
No reproduction or networking permitted without license from IHS
Not for Resale

system as well to minimize damage in case combustion persists. Hazards associated with fire by-products and some fire protection systems must be recognized and appropriate personnel precautions must be exercised.

### 7.8.1 Carbon dioxide

Carbon dioxide is frequently used as the fire quenching medium. It is admitted to the generator housing through piping and nozzles to fill the housing. The carbon dioxide may be admitted either by manually actuated valves or by automatic valves. The automatic valves may be triggered by a signal from combustion detectors, temperature-sensitive elements, or protective-relay action. To be effective, the system must be fully-charged and operative and the generator enclosure must be kept closed except for the $CO_2$ relief covers on the housing. Low portions of the powerhouse must be vented after a discharge to prevent possible suffocation of personnel walking into a pocket of $CO_2$. Refer to safety procedures relevant to $CO_2$ fire protection systems for personnel hazards.

### 7.8.2 Other systems

Water sprinkler systems are sometimes installed instead of carbon dioxide. Sometimes air is injected into the piping system along with water to achieve a high degree of atomization. With resin-based insulations, some concerns about intrusion of moisture into insulation have lessened compared to older asphaltic systems. Water offers the advantage of plentiful quantities of extinguishing medium at low cost. Compared with $CO_2$, which may dissipate before the fire is completely out, the flow of water can be maintained for a long period and restarted if necessary. Following deluge of a generator, the stator and field windings must be meggered before re-energizing. The unit should be dried as soon as possible to avoid iron rusting from water that gets into the core iron. Air flow and heat will help to dissipate moisture, but the unit needs to be inspected before being energized. Inadvertent short deluges will usually be evaporated by the heat contained in a warm unit.

## 7.9 Vibration detection and correction

### 7.9.1 Detection devices

Some generators are equipped with a vibration-detection device mounted on a vibration-sensitive stationary part such as a bearing bracket. If any unusual mechanical or magnetic forces cause higher than normal vibration, the device will close a contact providing an alarm or shut down signal, depending on the design of the control circuits. More modern vibration-detection equipment may consist of proximity probes mounted to detect shaft runout at selected points and feed the resulting signals into an instrument that can deliver the signals to a chart recorder. In some cases the instrument will be capable of filtering so that only the rotational frequency component is recorded and in a different mode the total vibration minus the rotational frequency component is recorded.

### 7.9.2 Causes of vibration

Vibrations attributable to the generator can be caused by abnormal mechanical or electrical conditions either in the stator, the rotor, or the combination of the two (e.g., air gap variation).

Most commonly, the vibrations originate in the rotor due to mechanical unbalance (which causes shaft runout), magnetic unbalance (caused by the rotor or the stator being out of round), or shorted turns of a field pole. In addition, abnormal hydraulic conditions such as a runner seal rub can cause vibrations to be transmitted from the turbine through the shaft or foundation to the generator. Depending on the stator winding parallel arrangement, machines below 400 r/min may have magnetic pull equal to or exceeding the mechanical unbalance for a given air gap or rotor displacement. Hence, magnetic pull often has much more influence on vibration than balance. See the maintenance inspection checklist, in 8.2.1, for applicable items.

Copyright © 1999 IEEE. All rights reserved.

Copyright The Institute of Electrical and Electronics Engineers, Inc.
Provided by IHS under license with IEEE
No reproduction or networking permitted without license from IHS
Not for Resale

### 7.9.3 Correction of vibration

Any permanent increase of vibration indicates change in the generator-turbine unit, and the cause of it should be immediately investigated. Depending on the severity of the vibration increase and the cause of it, a decision should be made whether or not the generator should be taken out of service for immediate corrective action.

For procedures for alignment check and rebalancing, see 8.5.5. For unusual operating conditions, see 7.6.

## 7.10 Operation of generator/motors

Hydro-generators may be reversible in nature and used as motors in pumped-storage applications. The turbine becomes a pump, and the generator becomes a motor to replace the water taken from the upper reservoir during the generating mode. The water in the pump cavity is generally depressed by the use of compressed air during the starting period for any of these starting methods.

### 7.10.1 Starting methods

One of the problems unique to generator/motors is starting as a motor in preparation for the pumping mode of operation.

**CAUTION—**Field current applied at standstill will result in unbalanced pull, the magnitude of which depends on the degree of air gap non-uniformity and the amount of field current. Deflections and possible resultant damage are controlled by design of the shaft system and mechanical stiffness of the rotor, the stator core and its support structure.

Some of the means of starting the motor are described in 7.10.1.1 through 7.10.1.7.

#### 7.10.1.1 Wound-rotor induction starting motor

A wound-rotor motor, large enough to overcome the losses of the main unit and accelerate it to synchronous speed, is mounted on the shaft of the main unit.

#### 7.10.1.2 Synchronous start

There are several variations of this method, all using one machine operating as a generator in parallel with a second machine operating as a motor. Among the variations are the following:

a) Both machines are paralleled at standstill, separated from the power system, and have their field windings energized. The pair are brought up to speed, one acting as a generator and the other as a motor. They are synchronized to the system, and the generating machine is then shut down.

b) The same as a) except the motor unit does not have its field energized and operates as an induction motor during starting. The field is applied after the motor has been brought near the synchronous speed of the starting generator. After the two units have synchronized to each other, they are brought to system frequency and synchronized, and the generating machine is shut down.

c) Similar to a) or b) except that the generator is a smaller, nonreversible accessory-type turbine generator.

d) Similar to a) or b) except the units are not paralleled until after the generator unit has been brought to some intermediate speed.


Copyright © 1999 IEEE. All rights reserved.
Copyright The Institute of Electrical and Electronics Engineers, Inc.
Provided by IHS under license with IEEE
No reproduction or networking permitted without license from IHS
Not for Resale

#### 7.10.1.3 Full-voltage or reactor reduced voltage induction start

The main unit has a heavy amortisseur winding that is used to start the main unit as an induction motor across the line. High winding forces, which are proportional to the current squared, are present during starting.

#### 7.10.1.4 Reduced-voltage induction start

The unit is started as an induction motor on reduced line voltage using either taps on the main transformer, an auto-transformer, or a delta-wye shift of the main transformer connections to provide the reduced voltage. All the above methods suffer from large voltage increments and variable phase angle when switching from start to run.

#### 7.10.1.5 Reduced-voltage reduced-frequency start

The generator/motor to be started from rest is electrically connected to a decelerating generator of comparable size. The energy of the rotating decelerating generator is electrically transferred to the generator/motor with reduced voltage and varying frequency. The units are synchronized at a subsynchronous speed and then accelerated to rated speed with the generator turbine. Synchronization to the system is accomplished in the normal manner.

#### 7.10.1.6 Variable-frequency reduced-voltage start

The generator/motor is started from a static variable-frequency source capable of supplying starting power from zero frequency to 50/60 Hz and at a value of reduced voltage suitable to the application.

#### 7.10.1.7 Accessory turbine

A small turbine is mounted on the shaft of the main unit with the opposite rotation to the main turbine and is used to accelerate the motor pump to synchronous speed.

The water in the pump cavity is generally depressed by the use of compressed air during the starting period for any of these starting methods.

### 7.10.2 Synchronization

When operating a unit in the pumping mode, the motor must be synchronized to the system after reaching synchronous speed for any of the starting methods with the exception of the full-voltage induction and reduced-voltage methods. The synchronizing may be accomplished either manually or through the use of automatic synchronizing equipment.

## 8. Maintenance

## 8.1 Introduction

An effective inspection program can significantly minimize undesirable, unscheduled service interruptions. An effective program requires the establishment of a realistic schedule of planned outages during the operating life of a generator to permit periodic visual inspections supplemented by diagnostic tests.

Copyright © 1999 IEEE. All rights reserved.

Copyright The Institute of Electrical and Electronics Engineers, Inc.
Provided by IHS under license with IEEE
No reproduction or networking permitted without license from IHS
Not for Resale

Regular and comprehensive inspections may vary among users according to their individual philosophy, individual experiences, system demand, machine availability, and unit history.

At the time of publication of this guide, there are no published standards available on the subject of condition monitoring; however, the technology is developing and the practicing engineer should research the current techniques available in the market.

The first, and most important, complete inspection should be performed approximately 1 to 3 years from the date of initial synchronization of the unit. The unit should be dismantled to provide access to all portions of the machine. This may include removal of the rotor.

Successive minor inspections are recommended at 1 year intervals.

Intermediate inspections are required immediately after the unit has been subjected to severe or unusual operating conditions such as high unbalanced loading, line-to-line or line-to-neutral faults, severe out-of-phase closures, prolonged operation at runaway speed, or other abnormal conditions.

Maintenance recommendations recognize the need for a preventive maintenance program to permit early detection and correction of conditions that may occur under normal or abnormal operating conditions.

Thermal expansion and contraction, vibration due to electro-magnetic and mechanical forces, realignment of components, and slight dimensional changes in insulating materials occur, to some extent, during the operation of any generator. Abnormal operating conditions can amplify those effects. Only inspections can determine whether these influences have resulted in the need for maintenance.

The need to focus particular attention to a specific area of the generator or the need to perform specific investigative tests is often determined by past operational experience, the accumulated maintenance history of the unit, unusual operating conditions, or unusual changes in the unit's performance. Unusual operating conditions may include excitation disturbances, unusual or abnormal vibration or noise, voltage or power surges, overloads, loss of cooling water, or unexplained excursions in generator temperatures. This maintenance guide directs attention to the various machine components that should be examined during every major maintenance inspection. Many of the component conditions described may never occur during the operating life of a generator. Nevertheless, even the remote possibility of their occurrence warrants these periodic examinations in view of the serious consequences when certain conditions remain undetected or when corrective action is delayed.

After a maintenance inspection and during the reassembly of any machine, particular attention must be directed toward the cleanliness of the unit, the proper locking of hardware on reassembled parts, and the removal of all foreign objects such as tools or debris from any corrective maintenance work.

When using the maintenance inspection checklists in 8.2.1, it should be understood that certain items may not apply to a particular unit or that some unlisted condition may be discovered. If unusual conditions are discovered, or if the conditions discovered require further diagnosis or guidance, the hydro-generator supplier should be consulted. The problem should be recorded and the record should be kept, along with the recommendations and actions taken.

## 8.2 Visual inspection

Inspection of a component often involves only a visual check for evidence of looseness, overheating, electrical deterioration, mechanical damage, dusting, fretting corrosion, improper peening or locking of hardware, or other conditions that could lead to more extensive problems unless corrected. In many cases the visual inspection must be accompanied by simple mechanical checks such as tapping, light bumping, or the application of physical pressure. Examples of mechanical aids to a visual inspection are as follows:


Copyright © 1999 IEEE. All rights reserved.
Copyright The Institute of Electrical and Electronics Engineers, Inc.
Provided by IHS under license with IEEE
No reproduction or networking permitted without license from IHS
Not for Resale

a) Bracing members (diamond spacer, group connection blocking, parallel ring spacers, cleating assemblies, and other braces) should be tapped with a small hammer. The resulting sound and vibration produced aids in evaluating the condition of the members with respect to looseness.

b) With a finger spanning a slot wedge and stator tooth, relative motion may be readily determined when the wedges are tapped as described in a). Sound should also be noted to aid in determining the degree of wedge tightness. Other devices may be commercially available to check wedge tightness. Other methods may apply to spring-loaded wedges, and the manufacturers should be consulted.

c) Tapping of nuts, washers, lockplates, balance weights, and other assembly hardware may reveal evidence of looseness that would not otherwise be apparent.

d) Pressure applied with a knife blade between stator laminations at random or suspicious locations in the stator core assembly is a common check for stator core looseness. Similarly, core looseness is indicated if vent fingers can be easily moved tangentially when a light prying pressure is applied.

e) The sound produced, when certain components such as fan blades are tapped with a metallic tool, can often lead to the discovery of cracked welds, breaks, or looseness in mounting hardware.

The maintenance inspection checklists in 8.2.1 are grouped under specific areas or major components of the generator assembly. Each subclause (8.2.1.1 through 8.2.1.10) includes the most significant items to which an inspection should be directed, along with a description of the visual evidence associated with deterioration or other undesirable changes in the component. Any abnormal conditions discovered should prompt a comprehensive examination (and appropriate tests) of associated components that may have been affected by (or may have contributed to) the observed condition.

### 8.2.1 Maintenance inspection checklists

#### 8.2.1.1 Stator frame

a) Cracks or broken welds in frame structure.

b) Vibration, movement, or looseness evidence in frame cover plates, conduit, cooler mounting, and assembly hardware in the outer frame and air housing area.

c) Evidence of movement at frame splits or at frame hold-down bolts.

d) Grout obstructions to frame expansion.

e) Gaps or grout damage around the perimeter of the soleplates.

f) Broken welds between frame radial dowels and soleplates (where this type of radial freedom soleplate to stator frame construction has been provided). Note that radial dowels must not be welded to the frame base rings and soleplates. In this case, frame expansion and contraction would be restricted and core and frame buckling and distortion could occur.

g) Outward migration of radial dowels from between frame and soleplates.

h) Frame distortion.

i) Excessive variations in the gap between the nuts and supports of frame jackscrew assemblies. Improper locking of adjusting nuts on jackscrews.

j) Mechanical damage to cooler tubes.

k) Water leakage from cooler tubes or cooler piping.

Copyright © 1999 IEEE. All rights reserved.

Copyright The Institute of Electrical and Electronics Engineers, Inc.
Provided by IHS under license with IEEE
No reproduction or networking permitted without license from IHS
Not for Resale

#### 8.2.1.2 Stator core assembly

a) Broken laminations at tooth tips.

b) Axial looseness of laminations as indicated by the knife test, by the gentle tangential prying against vent fingers, or by tangential tapping of end fingers.

c) End finger looseness as indicated by the knife test or visual evidence of finger misalignment with respect to the end of the core.

d) Erosion, breakage, or vibration of vent fingers.

e) Misalignment of vent fingers.

f) Ventilation obstructions at core vents.

g) Mechanical damage due to foreign objects, damage inflicted during the performance of other corrective work, or damage caused during rotor removal.

h) Overheating evidence—darkened paint or welding of laminations.

i) Broken lamination ears at stacking studs or keybars.

j) Fretting corrosion between stacking studs or keybars and core, at stator splits or in stator slots (in wedge grooves or along slot walls).

k) Broken welds between stacking studs or keybars and frame rings.

l) Radial migration of laminations as evidenced by laminations protruding into the stator air gap.

m) Circumferential waviness in iron packs. Other forms of core distortion or buckling.

n) Buildup of dirt, ferrous oxide, or oil deposits on stator core and ventilation passage surfaces.

o) Migration of insulation between stator sections at the core splits.

p) Loss of pressure in core clamping assembly—torque on clamping bolt nuts below required minimum values.

q) Looseness of hardware as evidenced by improper locking of lockplates, misalignment of locking peen marks, or weld breaks on locking tack-welds.

r) Overheating of end fingers or core end packs.

s) Dust and powder deposits, including color and patterns along the slot lengths.

#### 8.2.1.3 Slot portion of stator winding

(See IEEE Std 56-1977.)

a) Looseness of slot wedges as evidenced by filler spring compression measurement, by axial movement or dusting, or by vibration when tapped.

b) Outward migration of fillers from under slot wedges.

c) Outward migration of slot side filler.

d) Outward migration of slot center filler strips.

e) Blockage of ventilating passages due to axial slot wedge movement (on units with cut back or airflow type slot wedges).

f) Charring or overheating evidence on wedges, slot fillers, or coil surfaces that might be associated with iron overheating or slot discharge.

g) Mechanical damage.

h) Abnormalities in wedge locking devices.

i) Broken or cracked wedges.


Copyright © 1999 IEEE. All rights reserved.
Copyright The Institute of Electrical and Electronics Engineers, Inc.
Provided by IHS under license with IEEE
No reproduction or networking permitted without license from IHS
Not for Resale

#### 8.2.1.4 Stator end winding area

(See IEEE Std 56-1977.)

a) Evidence of dusting, erosion, or cutting of insulation due to movement, or vibration of bracing components. All bracing components, such as diamond spacers, group connection spacer blocks, coil support ring spacers, and parallel ring spacers should be examined for evidence of this type.

b) Frayed or broken twine or banding lashings.

c) Looseness or movement of parallel ring clamping assemblies and their associated hardware.

d) Distortion of stator coils, parallel rings, coil leads, or main leads due to faults during operation. Minor evidence may be displayed by paint cracks at mating surfaces between winding and bracing components. Severe evidence would include cracks in groundwall insulation and noticeable distortion.

e) Tape separation in stator coil ground insulation. Coil surfaces should be examined on the straight portion immediately outside of the stator core, on each end of the slot.

f) Softness or looseness in connection taping insulation. Cracking of potting resin or caps of units fitted with encapsulated connections.

g) Erosion of insulation by foreign substances embedded or lodged against coil insulation surfaces. Particularly damaging are magnetic particles that can vibrate and "drill through" insulation when magnetized by the pulsating fields that are present during normal operation.

h) Overheating or mechanical damage evidence in any portion of the end winding. Changes of color of the enamel surface treatments. Indications of flow of insulating resins from coils or other insulating components.

i) Contamination of winding surfaces by chemical, moisture, oil, dirt, brake dust, conducting paint, or other deposits.

j) Corona activity as evidenced by tightly adhering chalk-like deposits on the winding at locations where operating voltage stresses are high between adjacent components. The deposits, in air-cooled hydro-generators, are generally gray-white in color. When dust and oil vapors have been electrically precipitated and altered chemically (in areas of high electrical stress), the deposits may be of a darker, ebony-like color.

k) In units equipped with a water-cooled stator winding, the cooling water circuit should be examined for evidence of water leakage, connection clamping, looseness, damage to insulating connecting hoses, or unusual evidence of vibration, or movement in any part of the assembly.

l) Overheating evidence at parallel ring clamps, coil support structures, or other members due to magnetic fields.

#### 8.2.1.5 Main and neutral lead assembly

a) Lead insulation taping irregularities including evidence of thermal discoloration of surface enamel treatments.

b) Looseness, movement, or mechanical damage in the main or neutral lead supporting or cleating structure or in the current transformer mounting assemblies.

c) Overheating evidence in connecting busses or shunts.

d) Evidence of overheating at insulated flange connections to isolated-phase-bus duct when applicable.

e) Ventilation obstructions within main or neutral lead enclosures.

f) Tracking or corona activity evidence in the main lead or lead cleat area.

--`,,`-`-`,,`,,`,`,,`---
Copyright © 1999 IEEE. All rights reserved.

Copyright The Institute of Electrical and Electronics Engineers, Inc.
Provided by IHS under license with IEEE
No reproduction or networking permitted without license from IHS
Not for Resale

#### 8.2.1.6 Rotor coils, poles, and damper winding

a) Dusting or erosion evidence at mating surfaces between field coil braces if supplied, and coil sides.

b) Improper locking or looseness in field coil braces and their assembly hardware.

c) Migration of insulation from between field coil turns.

d) Insulation fretting or migration between coil copper and pole head or between spider rim and coil copper.

e) Breakage or looseness of top or bottom field coil collars.

f) Cracks or breaks in the field winding circuit copper, particularly the brazed or bolted connections between adjacent field coils.

g) Overheating evidence on field coil surfaces, at connections between adjacent coils, or at surfaces that mate with collars and braces.

h) Breaks in connections between damper bars and end segments, broken damper bars, or cracked or broken damper connections between adjacent poles. The connecting hardware should also be checked for tightness.

i) Overheating evidence in the damper winding circuit, particularly at brazed, bolted, or soldered junctions. Overheating or welding on the pole head surface along damper bar slots. Overheating in the damper circuit is usually indicative of previous single-phase or high unbalanced loading, induction motoring of a unit not designed for induction motor operation, or other fault conditions.

j) Overheating at the axial ends of pole pieces (the upper coil support portion of a field pole).

k) Moisture, oil, dirt, brake dust, or other contaminants on insulation surfaces. Particular attention should be directed to field coil collars, coil braces, and the insulators between rotor main leads and ground. Contamination may reduce the voltage withstand capabilities of these surfaces with respect to creepage or flashover between exposed copper surfaces and ground.

l) Ventilation obstructions due to dirt accumulations or migration of insulating components.

m) Looseness, vibration, or movement of assembling hardware. Improper locking or peening of locking devices.

n) Cracks in the fan blades or shrouds of units equipped with integral blowers.

o) Mechanical damage of any kind.

p) Looseness or fretting in the dovetail key assembly and dovetail key axial locking devices.

#### 8.2.1.7 Collector and brush rigging

a) Brush imprints, nonuniform, or excessive wear, nonuniform color, or rough surfaces on collector rings. Imprints are often the result of moisture effects during shutdown and can often be eliminated by using space heaters.

b) Spacing between brush boxes and collector rings that differs from the usual 3 mm recommended value.

c) Evidence of brush chipping or double facing.

d) Evidence of carbon deposits in brush boxes (which could restrict brush movement).

e) Dirt or carbon dust accumulated on the collector insulation.

f) Evidence of selective action—brush or brush shunt overheating.

g) Refer to 8.2.1.6 item k).

h) Refer to the generator instruction book for recommended operating maintenance for collectors or brush rigging.


Copyright © 1999 IEEE. All rights reserved.
Copyright The Institute of Electrical and Electronics Engineers, Inc.
Provided by IHS under license with IEEE
No reproduction or networking permitted without license from IHS
Not for Resale

#### 8.2.1.8 Spider, spider rim, and brake rim assembly

a) Ventilation obstructions in rim ventilation ducts.

b) Looseness of balance weights and their associated mounting hardware.

c) Broken tack-welds or improper locking of rim bolts.

d) Vibration or movement of rim keys. Improper locking of rim key keeper plates. Also any shifting of the clearance between rim and the ends of the spider arms that would cause balance shift, air gap variations, or rim growth.

e) Cracks or breakage at the spider arm ledges that provide axial support for the rim. Also along arms and at all welds.

f) Looseness, vibration, or movement of ventilation opening orifice covers, baffles, and their assembling hardware.

g) Brake ring overheating, surface pitting, or distortion evidence.

h) Improper clearance between brake ring and spider rim end plate. (Leading end of brake ring segments should be tight while trailing end should have specified clearance. Other arrangements are necessary on units that rotate in both directions.)

i) Improper locking of brake ring segment bolts. Evidence of unusual thermal or mechanical stresses in brake ring segment mounting bolts.

#### 8.2.1.9 Bearings

a) Refer to generator instruction book requirements for recommended bearing maintenance.

b) Overheating, scoring, pitting, or other unusual observations on thrust bearing babbitt surfaces, runner surfaces, or on shaft journals.

c) Contamination or physical damage to bearing insulation. Changes in bearing insulation resistance.

d) Inadequate or excessive guide bearing and/or guide bearing seal clearances. (Excessive clearances could result in oil or oil vapor leaks.)

e) Leakage from oil pot gasketed joints, from oil or water piping connections, or from condition monitoring devices in the oil or water circuits.

f) Oil contamination.

g) Fretting or wear between the shoes and supports or between the thrust runner and the shaft.

#### 8.2.1.10 General assembly details

a) Overheating or mechanical damage to baffles, blowers, covers, or auxiliary equipment. Refer also to generator instruction book requirements for routine maintenance.

b) Improper seating, contact, and assembly of shaft grounding brushes.

c) In units where bearing insulation is not integral with the bearings, check the condition of insulating couplings for pipe and conduit, insulation between the upper bracket arms and frame, and other insulation isolating the upper bracket from the remainder of the unit. Check visually (as well as by tests) to verify that insulation is not inadvertently shorted by incorrect assembly of components, by contamination, or by foreign objects.

d) Eccentric stator bore and/or excessive variations in air gap measurements (between rotor and stator) around the perimeter of the machine or from top to bottom of the stator core.

e) Excessive brake shoe wear requiring shoe replacement (before damage to shoe retainer occurs).

f) Damaged brake shoe retainers.

g) Improper operation of braking and/or jacking equipment.

h) Improper clearances between rotating and stationary parts—baffles, seals, and other similar components of the machine.

Copyright © 1999 IEEE. All rights reserved.

Copyright The Institute of Electrical and Electronics Engineers, Inc.
Provided by IHS under license with IEEE
No reproduction or networking permitted without license from IHS
Not for Resale

#### 8.2.1.11 Verification of protective relaying

It is desirable to inspect the protective relays for proper operation during the scheduled preventative maintenance inspections of the hydro-generator. Most relays that operate in metering circuits of the hydro-generator are routinely checked and calibrated by the relay specialists.

Protective relays however, are easily overlooked since they are not metered and are not intended to function unless an abnormal condition exists. Typical abnormal conditions may involve generator overspeed, excitation, bearing oil circuit, fire protection, vibration, creep, brakes, and jacks. The protective system may be designed to prevent startup, to alter operation, to annunciate unusual conditions, or to actually shut down the unit if an abnormal condition occurs.

Many of the protective devices rarely operate during the normal service life of the machine, but they should be routinely checked for proper operation. The verification of the reliability of the protective devices includes manual operation of the actuating mechanism to be certain that it operates freely. An inspection of the contacts of the device should be performed to make sure that they are in satisfactory condition. The inspection should also ensure that they are free of dust, dirt, and corrosion, and that the lubricating oil has not hardened on the moving parts.

Detailed maintenance instructions for the protective devices are usually covered in the instruction books supplied by the manufacturer of the relays.

## 8.3 Routine electrical tests

The purpose of a maintenance inspection and test program is to search for and correct potentially harmful or abnormal conditions. A scheduled maintenance test failure is preferred over an in-service failure. Therefore, it is usually desirable to continue maintenance tests to their recommended test levels to permit the most meaningful evaluation of an insulation system's condition.

**WARNING**
The test voltages employed in many maintenance tests could cause personal injury, loss of life, or property damage.

Install barriers and danger signs, and deploy personnel at access locations to prevent the movement of other personnel into a hazardous test area. Personnel involved in observing tests, performing tests, or guarding access to test areas should be made aware of the hazards of approaching or contacting the test circuit during test application or prior to solidly grounding the circuit after test. Whether circuits being tested are bare or fully insulated, they should be treated as being bare during actual voltage application. (Voltage as high as applied test potentials may be present on insulated surfaces.)

### 8.3.1 Introduction

A complete and thorough visual inspection does not, in itself, provide the necessary information to permit a meaningful, overall evaluation of a machine's condition. Similarly, no single test or set of tests is capable of providing complete evaluation information. Therefore, every comprehensive maintenance inspection must be supplemented with a battery of tests that have been selected for their usefulness in detecting specific areas of weakness, contamination, or deterioration that would not normally be visually apparent. Each of the recommended tests has been selected to supply data complimentary to inspection findings. An evaluation based on inspection and test findings aids in establishing a realistic confidence level with respect to the serviceability of the unit or provides a positive basis for determining the need for, and extent of, corrective maintenance necessary to attain desired conditions.


Copyright © 1999 IEEE. All rights reserved.
Copyright The Institute of Electrical and Electronics Engineers, Inc.
Provided by IHS under license with IEEE
No reproduction or networking permitted without license from IHS
Not for Resale

The effectiveness of maintenance tests (and the reliability of the conclusions that may be determined from test results) is highly dependent on the following factors:

a) The use of proper test equipment and test procedures.

b) A thorough understanding of the purposes and limitations of the test.

c) The elimination of irregularities or abnormalities in the test circuit that might significantly affect test results (test setup, connected bus or cable, inadequate electrical spacing, stable voltage supply, etc.).

d) Accurate reporting of test data and related factors that are known to influence the results of certain tests (ambient temperature, winding temperature, relative humidity, barometric pressure, unusual surface conditions, or other factors that could affect test results or their interpretation).

e) Accurate identification of the circuit or portion of the circuit or component being tested.

It is recommended that a visual inspection of insulated components precede the application of maintenance tests, especially overpotential tests. This permits the detection (and correction) of conditions that might affect test results, contribute to undesirable test flashovers, or result in the complete failure of partially damaged insulation structures. In cases where foreign objects, severely contaminated creepage paths, or partial insulation destruction are discovered, corrective action (before the application of maintenance tests) can prevent the occurrence of additional damage during test application and minimize corrective maintenance requirements.

The recommended tests listed in 8.3.2 (and described briefly in 8.3.3 through 8.3.12) may be applied during each major maintenance inspection. When corrective maintenance is performed, certain tests may be repeated to verify that corrective measures have accomplished their objectives and to ensure that otherwise undetected damage did not occur during repairs. These recommended tests should be supplemented by additional investigative tests when inspection and test findings or the unit's previous maintenance and service history warrants their use. EPRI EL-5036 [B9] can also be consulted.[7]

### 8.3.2 Recommended tests

#### 8.3.2.1 Stator winding tests

a) Insulation resistance.
b) Polarization index.
c) Dielectric absorption.
d) Leakage-current.
e) Maintenance overpotential.
f) Corona probe.
g) Slot discharge and contact resistance measurements.
h) Turn-to-turn insulation.
i) Stator winding resistance.
j) Off-line partial discharge testing.

#### 8.3.2.2 Installed temperature detector tests

a) Insulation resistance.
b) Accuracy and continuity.

[7]The numbers in brackets correspond to those of the bibliography in Annex A.

Copyright © 1999 IEEE. All rights reserved.

Copyright The Institute of Electrical and Electronics Engineers, Inc.
Provided by IHS under license with IEEE
No reproduction or networking permitted without license from IHS
Not for Resale

#### 8.3.2.3 Rotor winding tests

a) Rotor winding insulation resistance.
b) Impedance measurements (field coil voltage drop tests).
c) Rotor winding resistance.

### 8.3.3 Insulation resistance tests

#### 8.3.3.1 Purpose

Measurement of the resistance of the insulation separating any two components serves the following purposes:

a) Establishes the absence or presence of physical and electrical contact between components.

b) Gives some evidence of insulation structural or surface contamination by moisture or other conducting contaminants.

c) Aids in establishing long-time trends to describe changes in insulation condition or characteristics. Comparative data from tests made at different times can signal the need for improved storage conditions or maintenance such as cleaning or drying.

d) Provides a degree of confidence that the circuit is satisfactory for the application of any planned, subsequent higher voltage insulation tests. Also provides verification that ground insulation characteristics have not significantly changed due to or during the application of overpotential tests. This is especially important after ac overpotential tests have been applied.

#### 8.3.3.2 Application of test and evaluation of test results

This is generally a popular test because of its simplicity. Test measurements are made by applying a constant, dc voltage across the insulating barrier being tested (between the copper of the winding and ground—between two adjacent conductors, etc.). The power source may be an ohmmeter or a megger type dc power supply depending on the voltage chosen for the test.

Insulation resistance is measured directly when the test equipment is calibrated in ohms or megohms and can be easily calculated when the test equipment is metered for output current measurement.

$$\text{Insulation resistance in megohms} = \frac{\text{Applied test potential in volts}}{\text{Test current in microamperes}} \quad (2)$$

The evaluation of insulation condition by the measurement of insulation resistance is described in IEEE Std 43-1974.

#### 8.3.3.3 Limitations

a) This test will not detect clean ruptures, breaks, or separations in the insulation structure when (as is usually the case) the spacing breakdown level is greater than the test voltage applied. (Paschen's curve, describing the breakdown of air at small spacings, indicates that more than 300 V peak is required to break down any clean air gap between plane electrodes.)

b) The value of insulation resistance measured is highly dependent on the area, thickness, and temperature of the insulation under test.

c) Although a high level of insulation resistance is desirable, it is not in itself an indicator of insulation quality.


Copyright © 1999 IEEE. All rights reserved.
Copyright The Institute of Electrical and Electronics Engineers, Inc.
Provided by IHS under license with IEEE
No reproduction or networking permitted without license from IHS
Not for Resale

### 8.3.4 Polarization index test

#### 8.3.4.1 Purpose

This test is an advanced version of the insulation resistance test described in 8.3.3 and provides the insulation characteristics described in that subclause. However, the test produces valuable additional information on those insulation systems where a significant insulation resistance change would normally be expected to occur as the time of voltage application increased. The test is most commonly employed for insulation resistance measurements of all stator windings and the rotor windings of large rotating equipment.

Any given insulation system has a reproducible insulation resistance versus time (or leakage current versus time) characteristic when tested under duplicate conditions of voltage, temperature, and surface or structural contamination. Changes in any of these factors influence both the magnitude of test measurement (leakage current or resistance) and the rate of change as a function of time. This characteristic is the primary reason for employing the polarization index test, rather than an "untimed" insulation resistance test, for measurements on stator windings or large rotor winding insulation systems.

This test has become one of the most popular for detecting the presence of moisture or other contaminating influences over surface creepage paths or within the insulation structure. The effects of contaminating influences may be clearly apparent from the results of tests made during any particular inspection. Often, long-term trends, obtained from tests during the storage of electrical equipment or from a continuing inspection program, are used to forecast the need for improved storage conditions or future maintenance.

#### 8.3.4.2 Application of test and interpretation of test results

The test is performed by applying a constant dc voltage between the copper of the winding and ground while measuring insulation resistance (or leakage current) as it changes with the time of electrification. Test duration is usually 10 min with readings taken at 15 s intervals during the first minute, 30 s intervals from 1 min to 3 min, and 1 min intervals from 3 min to 10 min of elapsed time.

Applied test voltage is usually chosen to have a definite relationship to the type and voltage class of the insulation system being tested. Stator windings rated above 10 kV ac should usually have their polarization tests performed at 2.5 kV dc or 5 kV dc.

Test values are plotted and a smooth curve is drawn through test points to reduce test and measurement variations that might occur due to slight voltage variations. The polarization index is then calculated from the 1 min and 10 min values obtained from this curve:

$$\text{Polarization index} = \frac{\text{10 min insulation resistance}}{\text{1 min insulation resistance}} \tag{3}$$

For a typical hydro-generator stator winding, a polarization index of 2.0 or higher is considered to be satisfactory. A polarization index approaching 1.0 occurs when the capacitance of the insulation system is effectively short-circuited by conducting surface leakage paths or contamination of the insulation structure itself. Generally, when the polarization index is found to be 1.5 or lower, insulation dry out and/or extensive cleaning is recommended before proceeding to higher test voltage levels.

NOTE —The insulation surface should be retreated with an approved insulating enamel or varnish after cleaning and drying have improved the polarization indices to satisfactory levels.

#### 8.3.4.3 Limitations

The limitations listed in 8.3.3.3 are still applicable when polarization index tests are made. The limitations become less valid when higher test voltages are employed.

Copyright © 1999 IEEE. All rights reserved.

Copyright The Institute of Electrical and Electronics Engineers, Inc.
Provided by IHS under license with IEEE
No reproduction or networking permitted without license from IHS
Not for Resale

As stated previously, the use of the polarization index, when evaluating insulation condition, is most effective on stator windings. Windings with inherently low copper to ground capacitance values (usually low voltage assemblies and some rotor windings) will demonstrate little change in insulation resistance as a function of the time of test voltage application.

### 8.3.5 Leakage-current test

#### 8.3.5.1 Purpose

This test was developed to provide insulation resistance characteristics as a function of applied voltage. The test is a recommended maintenance test for stator winding ground insulation systems.

In its application, the following tests are combined into one continuous series of measurements:

a) Dielectric absorption test.
b) Leakage-current test.
c) Maintenance overpotential test.

The data obtained from test measurements provides the information needed for the polarization index, demonstrates insulation characteristics as a function of voltage and time, and establishes that the insulation has a predetermined minimum value of insulation strength. In addition, the test often provides a warning or forecast of an impending test failure.

#### 8.3.5.2 Test application and evaluation

The leakage-current test (sometimes identified as the "graded-time" test) is described in IEEE Std 95-1977. This publication describes the test procedures employed in the three continuous stages of the dielectric absorption test. The following information is determined:

a) The constant conduction component of the measured test current.

b) The decaying absorption or charging component of the test current.

c) The absorption ratio (ratio of the 1 min absorption current to the 10 min absorption current) from which the time schedule for the subsequent leakage-current test is selected.

d) The polarization index and 10 min insulation resistance of the system.

#### 8.3.5.3 Leakage-current test procedure (by discreet voltage steps)

a) Immediately after the conclusion of the 10 min dielectric absorption test, test potential is increased to the voltage selected for the second step of the leakage-current test. (For windings rated 10–16.5 kV ac, where the dielectric absorption tests were made at 10 kV dc, subsequent voltage steps for the leakage-current test are in 2 kV dc increments. For windings rated above 16.5 kV ac, where dielectric absorption tests were made at 15 kV dc, 3 kV dc voltage step increments are used.)

   The time at each voltage step (determined from the dielectric absorption test) is predetermined to result in an absorption current component (at the end of each voltage step) that is proportional to the applied test potential. Thus, the plot of measured test current versus voltage is, in effect, a plot of changes in conduction current with increasing test potential. It should be noted that by using the correct time schedule for the leakage-current tests, the test current measured at the end of each voltage step is equal to that which would have been obtained if a 10 min dielectric absorption test had been made at that same voltage on a fully discharged winding.

   At elevated test potentials, a limited upward trend in leakage current is expected to occur due to the inception of end winding corona or surface discharges. Sudden increases in leakage current or steep


Copyright © 1999 IEEE. All rights reserved.
Copyright The Institute of Electrical and Electronics Engineers, Inc.
Provided by IHS under license with IEEE
No reproduction or networking permitted without license from IHS
Not for Resale

upward trends as voltage increases are often indicative of impending insulation failure or a breakdown of a portion of the internal insulation or external creepage paths involved in the test circuit.

If abnormal or unusual characteristics are noted (from data plotted during the application of the test), it may be desirable to delay further voltage increases until the cause of the abnormal condition has been investigated.

**WARNING**

Any investigation, with voltage applied, must be made with extreme caution. Personnel must not be permitted to contact or approach within several feet of the circuit being tested or surrounding components, which may retain a charge from test potentials. All components must be solidly grounded before any investigation requiring contact within the test circuit is made.

Assuming that the cause of an abnormal characteristic is not discovered, a decision is required to determine whether further high-voltage testing should be continued to the recommended maintenance overpotential level. This decision should give consideration to the customer's need for the unit's immediate availability as well as the risks of future operations with an apparent insulation weakness. The test voltage at which an unusual characteristic appears should be an important consideration.

b) The ramped voltage test technique automatically linearizes the dielectric absorption component of insulation current, thereby eliminating many of the problems encountered in the dc stepped voltage testing methods. Automatic compensation of absorption current eliminates the need for extensive absorption current calculations and complex volt-time testing schedules.

The ramped technique of insulation testing uses a programmable dc, high-voltage test set and automatically ramps the high voltage at a preselected rate (usually 1 kV/min). Insulation current versus applied voltage is plotted on an X-Y recorder, providing continuous observation and analysis of insulation current response as the test progresses. Insulation quality can be evaluated directly from the automatically recorded insulation current curves, since the observed insulation current nonlinearities are directly proportional to leakage-current variations.

The application of a ramped voltage, instead of discreet voltage steps, automatically linearizes the absorption component of the insulation current such that deviations in the leakage current are easily seen. The principal advantage of the ramp test over the conventional step method is that it requires only one person to perform the test and it provides that person with better control and sufficient foresight of impending failure to avoid damage to the insulation. In addition, the slow continuous increase in applied voltage (approximately 17 V/s) is less apt to damage insulation than the step method voltage increments (approximately 1 kV/s).

Charging and absorption current responses are linear above 2–4 kV. Therefore, any irregularities in the composite V-I curve are related to the leakage current. The leakage-current response will vary somewhat depending on the quality of the insulation being tested. The leakage current of high-quality insulation will be very small and linear in nature. As the insulation begins to age and weaken, the leakage current will increase, and at some voltage level, will become nonlinear in nature as evidenced by a positive increase in the slope of the V-I curve. The point at which the current starts to increase significantly is referred to as the *knee*. Further aging of the insulation will cause the knee to develop at progressively lower voltages.

c) The maintenance overpotential test is the final step of the leakage-current test. The recommended test potential for this portion of the test should be obtained from the generator supplier. Tests should be made at the supplier's recommended value or to a test level mutually agreed upon by the user and supplier, whichever is lower.

Copyright © 1999 IEEE. All rights reserved.

Copyright The Institute of Electrical and Electronics Engineers, Inc.
Provided by IHS under license with IEEE
No reproduction or networking permitted without license from IHS
Not for Resale

d) Prediction of impending test failure is often indicated from a plot of measured leakage current versus applied test potential. However, in cases where insulation damage consists of a clean break or rupture, sudden failure with no previous warning will occur when the applied voltage reaches the breakdown level of the copper to ground spacing. It is possible for a clean rupture (with relatively long creepage path lengths) to withstand an overpotential test when dry, but fail when the creepage path becomes contaminated with dirt or moisture. This is especially true in stator end winding areas where spacing between winding surfaces and ground is high. In those cases, damaged insulation must be detected by visual inspection procedures.

### 8.3.6 Corona probe test

#### 8.3.6.1 Purpose

The purpose of this test is to detect and locate areas of unusual ionization or partial discharges in the stator windings of high-voltage generators or motors. The corona probe measurements are sensitive to end winding surface discharges, internal cavity discharges (within the insulation structure), and discharges from coil surfaces to slot walls. The latter condition is often associated with stator slot assembly looseness which, if left uncorrected, could result in ground insulation erosion and eventual failure. Similarly, internal cavity discharges could lead to coil turn-to-turn or ground insulation failure when internal degradation has progressed sufficiently to permit motion or vibration of internal coil stranding.

#### 8.3.6.2 Application of test and interpretation of test results

The test is preferably applied to the entire stator winding using an ac test potential of approximately 80–100% of the rated line-to-ground operating voltage of the stator. Corona probe measurements are obtained at several (usually three) axial locations on each stator slot.

#### 8.3.6.3 Limitations

Very high corona probe measurements are always indicative of undesirable levels of partial discharge. Low test measurements, while verifying the absence of severe end winding surface discharges or internal cavity discharges, do not identify each slot where conditions exist that could lead to slot discharge. Therefore, it is essential that visual inspection findings be considered when using corona probe measurements to evaluate stator winding condition.

### 8.3.7 Slot discharge and contact resistance measurements

#### 8.3.7.1 Purpose

The slot discharge test is made for the sole purpose of determining the adequacy of electrical contact between the conducting varnish-treated portion of coil surfaces and the stator slot walls. Loss of this electrical contact results in relatively high energy capacitive discharges between the coil surface and the core.

Since a slot discharge condition is usually accompanied by stator slot assembly looseness, early detection and correction is required. Otherwise, severe electrical and mechanical (vibratory erosion) deterioration will soon occur.

#### 8.3.7.2 Application of test and evaluation of results

Tests are made with the winding energized at approximately the operating stress to ground. Detection is accomplished by means of a slot discharge analyzer connected to the terminals of the phase being tested. The signal from the analyzer is connected to, and observed on, an oscilloscope. (The slot discharge analyzer uses detection circuits that are resonant in the frequency range of high energy surface discharges while


Copyright © 1999 IEEE. All rights reserved.
Copyright The Institute of Electrical and Electronics Engineers, Inc.
Provided by IHS under license with IEEE
No reproduction or networking permitted without license from IHS
Not for Resale

blocking 60 Hz voltage by means of a high-pass filter.) When a discharge exists, high-frequency reflections are readily observable on an oscilloscope.

Location of specific coils where slot discharge is occurring can be accomplished by using the slot discharge analyzer, in conjunction with a probe that successively contacts the conducting surfaces of individual stator coils. (One or more slot wedges must be removed from each stator slot before probe measurements can be made on individual coils.) As an alternate, contact resistance measurements, made with a low-voltage ohmmeter, can be used to determine the slots where proper electrical contact (between coil surfaces and the core) has been lost. With suitable probes, resistance measurements can be obtained by contacting coil surfaces through core vents or, if slot wedges are removed, by contacting exposed coil surfaces. The winding must be de-energized and grounded for each testing.

The corona probe test may be used to localize the slots where surface discharges are occurring. (Refer to 8.3.6.)

#### 8.3.7.3 Limitations

Satisfactory slot discharge test results verify that no slot discharges were occurring during the test. However, when slot assembly looseness is involved, satisfactory slot discharge test results may be obtained on a coil suffering from slot discharge if that coil's surface is temporarily grounded to the slot wall. (Slot assembly looseness evaluations should reveal this condition.)

Test circuit arcing or operation of arc welders near the generator can affect slot discharge measurements. Therefore, if the test results indicate the presence of slot discharge, it should be determined whether external influences of this type are present. If so, the test should be repeated under conditions where these influences are eliminated (by temporarily stopping nearby welding operations or by making corrections to the test circuit).

### 8.3.8 Turn-to-turn insulation test (multi-turn stator windings)

#### 8.3.8.1 Purpose

The turn-to-turn insulation test is not included in the battery of tests recommended for each major inspection. However, the use of this test should be considered (for units wound with multi-turn stator coils) when any of the following conditions are known to exist:

a) When turn-to-turn service or test failures have occurred on a unit or on duplicate units at the same plant. Since all units were probably subjected to similar service conditions, similar failures could be expected.

b) When evidence of severe internal discharges have been discovered (through corona probe test results) and the possibility of turn-to-turn insulation degradation is increased.

c) When the unit has been subjected to a high transient voltage having a steep wave front. This may occur during a high-voltage test flashover, lightning disturbances, or under certain switching conditions. (The latter two conditions are usually controlled by generator surge protection equipment).

d) When coil repairs are made that, in any manner, involve the turn-to-turn insulation system.

#### 8.3.8.2 Test application and evaluation of test results

Turn-to-turn insulation tests should be made at a voltage determined by the manufacturer for each particular unit. Refer also to IEEE Std 522-1992.

Copyright © 1999 IEEE. All rights reserved.

Copyright The Institute of Electrical and Electronics Engineers, Inc.
Provided by IHS under license with IEEE
No reproduction or networking permitted without license from IHS
Not for Resale

The test is normally applied by inducing a test potential into individual stator coils using an inducing coil energized from a surge type fault locator. The inducing coil is mounted in a two-piece laminated core assembly designed to span the top and bottom legs of the coil being tested.

A one-turn search coil is wound in parallel with the inducing coil. The voltage trace from this search coil is viewed on an oscilloscope having a high-retention capability. Detection of a short-circuited turn in a stator coil is accomplished by measuring the amplitude and frequency of the voltage induced in the one-turn search coil when a test pulse is applied to the coil under test. The dampening effect of a coil with shorted turns results in a reduced voltage amplitude (after the first half cycle) and an increased frequency from that which would be measured when testing a good coil.

When making the induced voltage turn-to-turn test as described above, the connections of two adjacent coils should be bared to permit measuring and calibrating the voltage induced into a stator coil. Once this calibration test has been made on one coil, similar conditions of induced test voltage can be expected on other coils tested.

If all coil leads are exposed, the turn-to-turn insulation test may be applied directly to coil leads (rather than through the use of an induction coil).

#### 8.3.8.3 Limitations

Due to the high frequency involved in the inducing and induced voltage and the high currents that flow through the inducing coil during each voltage pulse, the cable used for the inducing coil should be of special construction. The cable should be made from multiple strands of enameled wire to reduce the current limiting effects of eddy losses at the high frequency.

If the turn-to-turn insulation of a coil fails during the application of this test, the coil must be replaced before the unit is placed in operation.

Tests on each coil should be made in several (preferably three) ascending voltage steps and at least one descending step. This is required to determine the voltage at which a test failure occurs and to add assurance that an unnoticed test failure, during application of the highest test voltage, will be detected at the next (lower) test step.

### 8.3.9 Stator winding resistance measurements

#### 8.3.9.1 Purpose

Accurate stator winding resistances should be measured during each major inspection to determine whether any changes have occurred from original test values. Changes could be indicative of the development of high-resistance connections or broken internal strands.

#### 8.3.9.2 Test application and evaluation

Resistance values that deviate from original or previous test values (corrected to a constant temperature) should be investigated. Particular attention should be directed to any areas of the stator winding where overheating evidence has been discovered, especially those areas involving coil-to-coil, coil-to-parallel-ring, main lead, or parallel-ring connections. Temperature and resistance measurement accuracy is extremely important since resistance changes of less than 50 $\mu\Omega$ can often be the result of open-circuited strands or a defective connection. A micro-ohmmeter can be used for this purpose on exposed connections. Test precautions relevant to resistance testing of inductive circuits should be observed.


Copyright © 1999 IEEE. All rights reserved.
Copyright The Institute of Electrical and Electronics Engineers, Inc.
Provided by IHS under license with IEEE
No reproduction or networking permitted without license from IHS
Not for Resale

#### 8.3.9.3 Limitations

The value of stator winding resistance measurements as an evaluation tool is primarily limited by the accuracy of the resistance and temperature measurements.

### 8.3.10 Rotor winding insulation resistance tests

Refer to 8.3.3.

### 8.3.11 Rotor winding impedance (field coil voltage drop tests)

#### 8.3.11.1 Purpose

The impedance test is designed to detect the presence of short-circuited turns in rotor field coils. The test data obtained can be used to locate an affected coil and (with additional turn-to-turn measurements) determine which turns of that coil are involved in the short circuit.

Tests made during several inspection periods can be compared to verify that progressive damage is or is not occurring. This is especially important when repairs of short-circuited turns are delayed or determined to be unnecessary in a generator rotor winding. The field windings of machines that are started asynchronously usually require immediate attention when short-circuited turns are discovered.

#### 8.3.11.2 Test application and evaluation of test results

Impedance tests are usually made by applying 110 V ac across the rotor collector rings and measuring the voltage drop across the field coils of individual poles. The voltage measurements should be equal except for a slight variation between alternate open and crossed field coils.

When making impedance tests on salient pole rotors, it is often desirable to determine the effect of a short-circuited turn on voltage drop measurements. A simulated short circuit may be accomplished by one of the two methods described below:

a) An insulated cable having a copper cross-sectional area roughly equivalent to a field coil turn should be placed around the field pole. The cable should be located beneath the pole head and generally physically parallel with the field coil turns. With the ends of the cable loop shorted through a connecting clamp, the voltage drop across this field coil will demonstrate the effect of a solidly shorted turn when compared with the voltage measurements obtained across other shorted field coils.

b) Two probes, connected through a short cable, can be used to apply a short circuit between adjacent turns on strap-type field coils having exposed, bare, or painted edges. (When simulating a short circuit by the probe method, care must be exercised to avoid damage to the turn-to-turn insulation of the coil.)

The effect of a shorted turn in a field coil can be compared to the effect of a shorted secondary in a transformer. Field coils with shorted turns will have a significantly lower impedance than those with no short circuits. Similarly, when voltage measurements are obtained across each coil in the series circuit, those with shorted turns will have a voltage drop proportional to their impedance. Voltage drop between individual turns may identify fault location.

On generators, shorted turns do not generally cause progressive damage. Therefore, reinsulation of generator field coil short-circuited turns is often not necessary. Replacement or repair should be considered if unusual increases in excitation requirements or vibration are experienced, if the number of shorted turns progres-

Copyright © 1999 IEEE. All rights reserved.

Copyright The Institute of Electrical and Electronics Engineers, Inc.
Provided by IHS under license with IEEE
No reproduction or networking permitted without license from IHS
Not for Resale

sively increases (from one inspection to the next), or if visual evidence of deterioration is present. Rotor pole turn shorts often result from mechanical impact burrs and can be cleared with careful grinding or scraping.

#### 8.3.11.3 Limitations

The field coils physically adjacent to a coil with one or more short-circuited turns may be mutually influenced by the single affected coil. In that case, the voltage measurements across the adjacent coils may be lower than normal but not as low as that across the affected coil. This mutual influence must be considered when evaluating test results.

In some cases, test voltages above 110 V ac are applied across the collector rings or across several field coils to determine (through localized heating effects) the exact position of a short-circuited turn. Application of the impedance test at these higher test voltages should not be attempted on field coil assemblies that are equipped with metallic springs to maintain radial pressure on field coils. These springs and their bearing plates can, in effect, act as a short-circuiting turn around each field pole. Thus, when test voltages are high, the spring assembly may overheat to cause changes in the spring's mechanical properties.

### 8.3.12 Rotor winding resistance

#### 8.3.12.1 Purpose

Rotor winding resistance measurements should be taken during each major inspection. These results (usually corrected to 75 °C) should be compared to results obtained during the previous inspection.

As with stator windings, changes in resistance would be indicative of high-resistance connections or developing cracks or breaks in the winding copper or in the connections between poles.

#### 8.3.12.2 Test application and evaluation

Accurate test measurements (and winding temperatures) should be obtained as described in 8.3.9.2.

When resistance values deviate from original or previous test values, particular attention should be directed to brazed, soldered, or bolted connections included in the field winding circuits. Any evidence of developing breaks or cracks or overheating of any type should be cause for immediate corrective measures.

#### 8.3.12.3 Limitations

Refer to the limitations listed in 8.3.9.3.

## 8.4 Investigative tests

A number of special-purpose investigative tests, not included among the recommended maintenance tests listed in 8.3, are available and recommended when their need becomes evident. The application of one or more of these investigative tests should be considered when the unit's past operating or maintenance history or a review of inspection and recommended test results indicates that additional evaluation information is required. After a unit has been subjected to unusual operating conditions or when a service failure occurs, additional investigative tests are usually required to determine the effect on involved generator components and to provide assurance that associated components have not been adversely affected. In cases where the presence of an abnormal condition has been discovered by the application of recommended maintenance tests, further investigative tests are often required to isolate (or locate) and determine the extent of the condition. Selected quality control tests are required during the repair or replacement of certain generator components.


--`,,`-`-`,,`,,`,`,,`---
Copyright © 1999 IEEE. All rights reserved.
Copyright The Institute of Electrical and Electronics Engineers, Inc.
Provided by IHS under license with IEEE
No reproduction or networking permitted without license from IHS
Not for Resale

Most of the more commonly employed investigative tests are listed in 8.4.1 through 8.4.8. Tests requiring laboratory-type equipment or laboratory conditions have been purposely excluded since those tests are usually made at the manufacturer's factory on samples that have been returned for detailed analysis.

### 8.4.1 Stator core loop test

This test should be considered in cases where there is reason to doubt the adequacy of stator core interlaminar insulation due to overheating evidence, visual core damage, or exposure to deteriorating influences. Application of the test involves the following:

a) The installation of a magnetizing loop around the stator core (through the stator bore and around the outer frame).

b) Excitation of the magnetizing loop at power frequency to produce an appropriate flux density in the stator core.

c) Measurement of stator core temperatures. (Temperature measurement is accomplished by the placement of thermocouples at strategic locations and by the use of infrared temperature scanning equipment.)

When visual evidence of interlaminar shorting is present, repairs should be made before applying the loop test. Otherwise, additional overheating (and possibly welding damage) could occur during the early stages of core excitation.

Test procedures, safety considerations, and power supply requirements are discussed in IEEE Std 56-1977.

Since many of the machine parameters used to determine test requirements are not readily available to the user, it is recommended that the manufacturer be consulted prior to conducting this test.

### 8.4.2 Short-circuit location tests

A search for, and the location of possible short circuits between two adjacent conductors or members is often required after a winding failure, during partial or complete winding replacement, during coil splicing operations, or when localized insulation overheating evidence has been discovered.

Investigative test methods generally employ adaptations of Ohms Law where dc voltage or resistance measurements are used to calculate the distance from accessible circuit termination points to the short circuit location. An example would be a case where a short circuit between two adjacent strands within the conductor of a multi-turn coil is to be located. With a constant dc test current flow through one of the two strands, voltage drops are measured

a) From end to end of the current-carrying strand.
b) From the start end of the current-carrying strand to the start end of the adjacent strand.
c) From the finish end of the current-carrying strand to the finish end of the adjacent strand.

The voltage obtained from b) plus c) should equal a) when only one short circuit exists. The ratio of b)/a) or c)/a) multiplied by the circuit length determines the distance from the end of the circuit to the short location. Using this test method (or applicable variations), even high-resistance short circuits can be accurately located if voltage measurements are made with a suitably high resistance voltmeter.

When a short circuit is present between the turns in a highly inductive circuit, the test procedures described in 8.3.8 and 8.3.11 should be considered. In the case of a field coil where individual turns are accessible (see 8.3.11), the ac impedance test should be expanded to include a measurement of individual turn-to-turn voltage drops of the affected coil. The voltage drop measured across a shorted turn will approach or equal zero.

Copyright © 1999 IEEE. All rights reserved.

Copyright The Institute of Electrical and Electronics Engineers, Inc.
Provided by IHS under license with IEEE
No reproduction or networking permitted without license from IHS
Not for Resale

### 8.4.3 Ground location tests

The techniques described in 8.4.2 can be applied to locating ground faults. In some cases, it is more practical to use one or more of the following methods.

#### 8.4.3.1 AC burn out test

A gradually increasing ac potential is applied between the winding and ground until smoke is detected from the failure area. This procedure is not recommended when the ground contact resistance is very low.

#### 8.4.3.2 Surge test

Voltage from a dc fault locator is increased gradually until the location of the ground is audibly determined by the sound of the intermittent discharge or by smoke produced at the point of discharge. (Voltage is applied between the winding copper and ground.) When using this test procedure, test voltage must be limited to values that will not overstress the turn-to-turn insulation of the winding included in the test circuit.

#### 8.4.3.3 Probe test

When a ground failure is known to be in the end winding region of a stator winding (somewhat remote from metallic ground), its location has often been determined by means of a probe test. Insulation surfaces are probed using a grounded probe (attached to a long, insulating, handling rod) while appropriate ac or dc test voltage is applied to the winding. Extreme caution must be exercised by test personnel to avoid physical contact with winding surfaces during test application. This test should not be considered when limited access, confined conditions, or other physical restrictions are such that test personnel safety cannot be assured.

#### 8.4.3.4 Sectionalization

In those few cases where equipment is not available to perform the suggested test or when they are unsuccessful, mechanical and electrical separation and isolation of the winding into sections becomes necessary until the fault location is determined.

### 8.4.4 Tests associated with stator winding partial discharge conditions

Corona probe tests and partial discharge tests were covered in 8.3.6 and 8.3.7, respectively. When these conditions are discovered in a stator winding, additional tests are often employed to aid in the overall investigation of the condition and as quality control checks while corrective work is in progress. Ensure that the high-voltage source is capable of sustained operation at the required voltage and charging current. These additional tests include those discussed in 8.4.4.1 through 8.4.4.5.

#### 8.4.4.1 Blackout tests

When end winding partial discharges (corona) or slot discharge conditions are suspected but not clearly defined or located, it is sometimes convenient to apply an ac test potential to the stator winding while visually observing the location, extent, and severity of surface discharges under blackout conditions. This test is conducted with the rotor removed and the neutral connection of the armature winding opened.

#### 8.4.4.2 Ozone concentration measurements

The measurements of the magnitude of ozone concentrations in the generator air housing or surrounding the machine during normal operation can be an indicator of the presence of surface partial discharges in the stator winding assembly.


Copyright © 1999 IEEE. All rights reserved.
Copyright The Institute of Electrical and Electronics Engineers, Inc.
Provided by IHS under license with IEEE
No reproduction or networking permitted without license from IHS
Not for Resale

#### 8.4.4.3 Coil surface contact resistance

Contact resistance measurements between coil slot portion surfaces and the iron of the core are used as a quality control and investigative test to verify that the coil surfaces are adequately grounded in the slot portion of the stator. If dust (dusting-erosion) is noted, a satisfactory contact resistance measurement can be misleading since the value may be of a temporary nature. In that case, visual inspection findings would be more reliable than an individual contact resistance measurement.

#### 8.4.4.4 Insulation power factor measurements

An evaluation of the ground insulation condition with respect to internal deterioration, voids, or contamination can be significantly aided by the use of insulation power factor measurements. Tests are normally performed at several test voltage levels since the change in power factor (tip-up) is an important characteristic. The test is of decreasing significance as the size of the test sample increases. Therefore, the test is usually employed only when winding connections have been opened to permit testing single coils. Test arrangements with respect to grading systems may significantly affect results. Refer to IEEE Std 286-1975.

#### 8.4.4.5 Partial discharge coupler measurements

Numerous units are equipped with capacitive couplers on the winding or mounted on the rotor to allow comparative measurement of partial discharge activity while the unit is on-line or separately energized. Such measurements can be interpreted and trended to provide condition information.

### 8.4.5 Metallic integrity tests

A number of tests are available to verify the integrity of many of the metallic components in a hydro-generator assembly. The selection and effectiveness of any particular test is dependent on the configuration, density, or magnetic or conductive characteristics of the component. Among the investigative tests normally employed are

a) Ultrasonic tests.
b) Chemical etching of surface combined with microscopic examinations.
c) Visible or fluorescent dye penetrant type tests.
d) Visible or fluorescent magnetic particle type tests.
e) Eddy current tests.
f) X-ray or gamma ray examinations.

One or more of the tests should be considered when

— A component failure or abnormality has been discovered and other duplicate or similar components become suspect.

— When inspection findings suggest the need for a more detailed examination.

— When a part (especially a rotating component) has been subjected to abnormal thermal or mechanical stresses that could initiate cracks or changes in the mechanical characteristics of the metal involved.

### 8.4.6 Physical measurements

An investigation of certain undesirable conditions often includes physical measurements of the components involved. This may include checks of clearances; torque measurements on bolted assemblies; air gap measurements; and roundness, flatness, or plumb checks. For example, when stator core assembly looseness is suspected, a check of the torque of core clamping bolt nuts would be a requirement.

Copyright © 1999 IEEE. All rights reserved.

Copyright The Institute of Electrical and Electronics Engineers, Inc.
Provided by IHS under license with IEEE
No reproduction or networking permitted without license from IHS
Not for Resale

### 8.4.7 Liquid leakage tests

Usually, leakage of water or oil from coolers or associated piping can be visually located. On units equipped with a water-cooled stator winding, relatively refined tests are required to detect and locate a leakage condition. These tests are described in the instruction books of applicable units. To detect and locate leakage and to determine its magnitude, water is removed from the coils and manifold. External portions of the water system are blanked off. With the known volume of the winding and manifolds pressurized (using dry instrument air or nitrogen), the leakage rate is determined from measurements of pressure change versus time. Actual location of a leak may involve the use of special detectors that have been designed to detect the sound of a leak or the presence of a gas additive (used in the pressurized system to aid in pinpointing leakage locations).

### 8.4.8 Tests while unit is operating

Sudden or progressive change in a unit's vibration, noise level, or temperature should be cause for immediate investigation. In those cases, certain measurements at operating conditions are desirable in addition to normal recommendations for standstill inspections and tests. These include noise, vibration, ventilation circuit, and bearing load measurements.

#### 8.4.8.1 Noise measurements

Noise level measurements at a number of locations and an analysis of the harmonic content of the measurement can often aid in the location of its source.

#### 8.4.8.2 Vibration measurements

As with noise measurements, the predominant frequencies involved in a measured vibration (as well as their magnitude and direction) can aid in determining the cause of the vibration. Vibration measurements on individual components or members are often used to determine the need for bracing, stiffening, or other assembly modifications.

#### 8.4.8.3 Ventilation circuit measurements

Ventilation tests (to verify operating values of developed blower pressure, pressure drops, air velocities, and air volumes) can aid in determining the cause of unusual temperatures (especially when the cause is associated with ventilation passage restrictions, improper assembly of air baffles or covers, or the improper operation of surface air coolers or air filters).

#### 8.4.8.4 Bearing load measurements

When bearing oil or bearing shoe temperatures are being investigated, strain gauge measurements (to reflect operating and standstill loading on each bearing shoe) would be a requirement to verify that loading is properly balanced and within design limitations.

### 8.4.9 Conclusion

The foregoing inspection and test guidelines are intended to describe the information necessary to permit a thorough evaluation of a hydro-generator's condition. Rigorous implementation of the inspection and test guidelines (including accurate and comprehensive reporting and maintenance of records) can have a significant influence on maximizing a generator's service reliability and minimizing the possibility of in-service failures.


Copyright © 1999 IEEE. All rights reserved.
Copyright The Institute of Electrical and Electronics Engineers, Inc.
Provided by IHS under license with IEEE
No reproduction or networking permitted without license from IHS
Not for Resale

## 8.5 Mechanical checks, alignment, and cleaning

### 8.5.1 Air gap measurements and variations

It is important to measure the air gap in detail on each machine in its early life. This should include measurements at the top and bottom of every pole, if possible. The position of the rotor relative to the stator should be noted. It is well to also determine the precise roundness of the rotor. In later years the air gap should be measured occasionally at every 90°.

Many manufacturers recommend that rotor air gaps vary no more than ±5% from the average. Users find in many cases ±10% is about as good as can be reasonably achieved.

Variations over 10% should be investigated. Unequal air gap may have serious effects on the structural strength of the rotor as well as the stator. Rotational checks should also be performed to determine the roundness of the stator bore and rotor.

Rotational air gap measurements are preferred over static measurements if more accurate data is needed. With the guide bearing clearance accounted for, the stator roundness is measured from a single pole rotated to the desired stator core pack measurements. Similarly with guide bearing clearance accounted for, the rotor roundness is measured from one stator core pack location to each (or selected) field pole tips rotated to that stator position. High-pressure thrust bearing lubrication is very useful for these measurements. Continuous on-line measurements are possible with newer instrumentation and readings may be used for monitoring, alarm, and diagnostic purposes.

### 8.5.2 Rotating exciter

Moisture and dirt are the causes of most breakdowns. The exciter should, therefore, be kept as free as possible from metal dust, dirt of any description, oil, or water. Dirt can be removed by wiping with rags, using a vacuum cleaner, or using low-pressure dry compressed air. The air must be free of water. The insulation resistance of the exciter windings should be checked annually and should not be allowed to fall below the manufacturer's recommendation. If oil should become mixed with the dust and dirt, it will be necessary to clean with a solvent designed for the purpose. The solvent should be used only in an area that is free from open flames and is well ventilated. The solvent used should have a high flashpoint and low toxic characteristics, and should have proper solvent action on grease and oil but a minimum effect on insulating varnishes. Care should be taken to prevent the solvent from contacting the commutator surface since the surface films are sensitive to solvents.

Inspect the commutator frequently to be sure that an adequately polished and filmed surface is maintained. Ordinarily, the commutator will require only an occasional wiping with a piece of dry canvas or other nonlinting material, but if blackening or sparking appears and grows worse, the cause must be determined and corrected. The brushes must move freely in the holders and, at the same time, make firm, even contact with the commutator. Check the pressure and keep it to the proper value as the brushes wear. Refer to manufacturer's instructions for details concerning proper brush pressure, distance between brush holder and commutator, and adjusting methods. Replace worn brushes with brushes of the same grade; do not mix different grades of brushes. Uneven air gaps during operation are the most common cause of sparking at certain brush holders.

### 8.5.3 Collector rings, brushes, and rigging

Inspect the collector ring frequently since trouble from defective brushes can develop suddenly. The brushes should move freely in the holders, and the brush faces should be of the same grade. When installing new brushes, they should be fitted to the curvature of the collector ring according to the manufacturer's instructions. Check that the recommended brush pressure is held as the brushes wear, and the proper distance between brush holder and collector ring is maintained. Keep the collector ring, brushes, and rigging clean

Copyright © 1999 IEEE. All rights reserved.

Copyright The Institute of Electrical and Electronics Engineers, Inc.
Provided by IHS under license with IEEE
No reproduction or networking permitted without license from IHS
Not for Resale

and dry. Dry dirt or dust can be cleaned with a vacuum. If oil is mixed with the dirt or dust, it will be necessary to clean with a solvent designed for the purpose. (Note the precautions for using a solvent given under 8.5.2.) If brush imprints appear on rings or commutators, the cause is usually condensation on the ring or commutator at standstill, resulting in galvanic corrosion or pitting that shows up after carbon fills the pits during operation. The remedy is a small space heater during shutdown. This should also include the contact effect of seals, thermometers, etc., that might otherwise bypass the bearing insulation. Refer to 7.1.4.6.

### 8.5.4 Bearings

#### 8.5.4.1 Guide bearing clearance checks

Guide bearing clearances are normally only checked during an overhaul. One means used for checking the bearing clearance is to jack the shaft to one side and set a dial indicator. Then jack the shaft in the opposite direction and read the travel. This travel is the total bearing clearance. The same measurements are also taken 90° around the shaft. An alternative method is to check and record the guide bearing clearance at each bearing shoe. While investigating bearing clearances, it is advisable to check clearance of guide bearing seals which, if excessive, could result in oil or vapor leaks, or both.

#### 8.5.4.2 Bearing insulation checks

The bearings above the rotor of vertical generators are usually insulated from the frame to prevent circulating current through the bearing surfaces, causing damage to the surfaces. The bearing insulation should be checked annually by means of an ohmmeter. If the insulation resistance is less than the manufacturer's recommendation, the cause of the trouble should be investigated. It is good practice to keep a record of these readings for comparison so that a problem can be detected and corrected before it develops into a failure. This should also include the contact effect of seals, thermometers, etc., that might otherwise bypass the bearing insulation. Refer to 7.1.4.6.

#### 8.5.4.3 High-pressure lube system checks

A high-pressure lubrication system requires very little maintenance since it is only used during the starting and stopping period, and operates for a short time. The most common problem is failure of a high-pressure line. Most systems are equipped with a pressure switch that gives an alarm or prevents a start if the proper oil pressure is not obtained. Filters, screens, orifices, and high-pressure parts should be routinely cleaned.

#### 8.5.4.4 Lubrication testing

A lubricant testing program is suggested to detect changes in the lubricant which should be investigated. Laboratory tests for viscosity and total acidity, which is an indication of oil oxidation, are normally used. The atomic absorption spectrometer test may be used to determine the concentration of metals in the lubricant. Annual or semiannual sampling and testing of the oil in a lubricating system is normally adequate. Water in the oil may indicate a leak in the oil cooler. One of the important items in a testing program is to have a good record-keeping system so the test results can be compared and changes can be detected.

### 8.5.5 Alignment and balancing

Initial alignment of the shaft or rotating parts is often done in the factory before shipment. Additional adjustments are made by the manufacturer near the completion of field installation so that the machine is satisfactorily aligned and balanced when it is turned over to be used and placed in service.

After a major inspection or repair involving removal of the rotor, realignment is necessary. Alignment of a vertical hydro-generator is an involved process requiring precise measurements of shaft plumbness and runout. A logical pattern of recording the data must be used so that a correct interpretation of the readings

--`,,-`-`,,`,,`,`,,`---


Copyright © 1999 IEEE. All rights reserved.
Copyright The Institute of Electrical and Electronics Engineers, Inc.
Provided by IHS under license with IEEE
No reproduction or networking permitted without license from IHS
Not for Resale

may be made. Detailed explanations of alignment and balancing techniques are available from the sources listed in Annex A.

#### 8.5.5.1 Acceptable vibration and shaft runout

Acceptable runout in millimeters for rotational checks is usually calculated by the formula $0.05 \times L/D$, where $L$ is the distance from the thrust surface to the point of runout measurement and $D$ is the thrust bearing outside diameter. No standards for acceptable maximum vibration have been developed.

It has been found that rebalancing may be used to correct difficult situations of misalignment. Hydraulic and unbalanced magnetic pull forces on a unit under load may produce excessive runouts which can be countered by balancing more easily than by adjustments to the bearings or other parts. Refer to 7.9.2.

### 8.5.6 Cleaning

The machine should be cleaned as often as operating conditions make it necessary. A vacuum cleaner is recommended for cleaning. Low-pressure compressed air can be used, but it must be dry. Cleaning fluids may be needed to clean oil, but the user should be certain they do not attack the electrical insulation or varnish. Consult the manufacturer for suitable cleaning fluids. Caution is required when using any cleaning fluid; the area must be well ventilated, and smoking should be prohibited. Dry ice pellet cleaning techniques are also available. The operator needs to be careful to avoid inadvertent removal of insulating materials.

## 8.6 Stator winding repair procedures

### 8.6.1 General

Inspections and tests of the machine armature winding may indicate a condition of one or more stator coils, or half coils, that would prevent the unit from being safely placed in service. Additionally, in-service failure may occur and damage stator coils beyond repair. If this occurs and it is important to return the unit to service, it may be possible to either replace the damaged coils or to bypass the bad coils or the parallel circuit containing them. In any of these cases, consideration must be given to the resources available to do the work and to any operating restriction resulting from the work.

The inspection and tests may also reveal that one or more coils at the line end of the armature winding have severe ground insulation weaknesses or that corona activity is damaging these coils. In this case it may be beneficial to interchange the main and neutral connections to minimize the voltage stress in the weakened areas.

Any looseness of the slot packing materials, the wedging system, the bracing and ties, or any other similar condition found during the inspection and testing should be evaluated and, if necessary, restored to an acceptable condition before the machine is returned to service.

### 8.6.2 Replacing individual stator coils or half coils

Replacing individual coils is feasible on many machines. Success depends upon the following:

a) The coils not being too tightly fitted in the slots circumferentially so that they are not bent during removal.

b) The insulation not being excessively dried out.

c) Provision of sufficient space around the bore of the machine to enable loosening or fanning out of many coils.

Copyright © 1999 IEEE. All rights reserved.

Copyright The Institute of Electrical and Electronics Engineers, Inc.
Provided by IHS under license with IEEE
No reproduction or networking permitted without license from IHS
Not for Resale

Access for fanning out coils sometimes can be provided by removing several field poles, but in other instances the entire generator rotor must be removed. It is important to have proper access to the face of the bore in order to avoid damaging additional coils. In order to replace a coil, it is necessary to gently move forward all the coils lying over it. This inevitably involves also gently moving forward a number of adjacent coils. Distortion of each coil should be kept to an absolute minimum, for both ground wall damage and turn-to-turn damage can occur if the coils are twisted or bent. Thus, there is a risk that the very act of replacing a coil may create other defective coils. Once a coil is replaced, the ones moved out must be put back just as carefully as they were moved forward. Consequently, many connections must be taken apart and remade. The work is tedious but when successful, will restore a winding to its full rating.

Extreme care is required in attempting to remove tightly packed coils since the clearances previously available to move the coil have been filled with packing.

Windings that are relatively new, and consequently, have resilient ground wall insulation and windings that have been impregnated with mica-asphalt combinations lend themselves more readily to coil movement without damage. Heat aids in making asphalt coils more limber, but care should be taken to not overheat the coils. Some owners test coils individually for turn-to-turn shorts during repairs such as this. High-potential tests are advisable after the coils are set down and wedged but before the connections are made.

Half-coils or bars are much more readily replaced, either front ones or back ones, since distortion of whole coils can be avoided completely. Half-coils equipped with connections at both ends lend themselves to easy removal and replacement. Single-turn coils also can be replaced, since connecting them into the winding is a simple matter. One-half of multi-turn coils can be replaced with considerably more work at the knuckles. Care must be exercised to restore the turn and strand insulation and the correct wire-to-wire connections. The finished size and appearance of the splices may be markedly different, but this is of no concern if the splices are properly insulated, braced, and ventilated. Sometimes it is possible to achieve an economical repair by cutting the damaged bar at the top and bottom, removing it, and then splicing in a new slot portion of the bar.

### 8.6.3 Bypassing stator coils

Sometimes the circuitry of a machine's winding will allow a defective coil to be cut out and separated from the rest of the winding. This is often the quickest way to return a much needed machine to service. A coil to be bypassed should be separated at the connection (lead) end to physically separate it from the rest of the winding, and suitably insulated. The coil should also be carefully cut at the end opposite the leads and the turns insulated so as to eliminate circulating currents should a short develop between turns in the idle defective coil.

Locating the cut at the lead end and the opposite end of the defective coil side within 50–75 mm of the stator core will permit future splicing of a front coil section. Extreme care should be exercised in correctly identifying the other end of the defective coil. Jumpers to complete the winding connections, whether series or group connections, can be made up of regular wire stocks by bundling enough strands to provide the cross-section needed to match the rest of the winding. Where the winding design requires preservation of strand insulation through the connections, the jumpers should do this also. Connections that are brazed will have longer life. Mica-tape insulation and glass tape coverings, together with insulating varnish, will provide long-lasting jumpers. Lashing and ties can be added where required.

On rare occasions it may be desirable to arrange for a sound coil to serve in a winding path different from that wherein it is installed as a consequence of several coils having been cut out of a particular path. In this event, it is important that a winding diagram be available; otherwise, it is possible to make serious mistakes in rearranging the group or phase path connections. Jumpers properly insulated and braced can be used as described above once the proper connections have been decided upon.


Copyright © 1999 IEEE. All rights reserved.
Copyright The Institute of Electrical and Electronics Engineers, Inc.
Provided by IHS under license with IEEE
No reproduction or networking permitted without license from IHS
Not for Resale

The front half of a bypassed coil can be quickly removed from the machine if dissection and inspection of it at close hand is desirable. This usually can be done merely by pulling one of the rotor poles to provide working space. The missing half-coil, in such an instance, can be replaced with a wood beam or block, wedging it in place to provide support for the half-coil in the bottom of the slot. End turn blocks and lashings must be adapted to the bridge across the vacant space. (In many machines it is easier and quicker to remove the rotor than to work in the limited space of one or two poles. A much better job of coil installation is possible and there is freedom to inspect the rest of the unit.) Reference may be made to EPRI EL-4983 [B8] for additional information.

### 8.6.4 Interchanging main and neutral connections

Many hydro-generators are constructed so that the stator winding main and neutral lead connections to the circuit rings may be interchanged. The lowest dielectric gradient across the stator coil ground wall insulation occurs at the neutral end of the winding, and the highest gradient (line-to-ground voltage) is at the main lead end. When the insulation begins to deteriorate with service as evidenced by tests or visual observation, main lead end coils are often in poorer condition than neutral end coils because of the greater dielectric stress to which they have been subjected.

Therefore, it may be possible to extend the life of the winding appreciably by interchanging the connections so that the weaker coils are near the neutral end and under less dielectric stress.

It should be appreciated that the line-end insulation deterioration may have also affected the strand bonding to the extent that the restraint provided by the strand bonding is no longer effective. Thus, mechanical abrasion of the strand insulation may result in strand shorts which, in turn, will give rise to local thermal deterioration of the coil. In cases where the main and neutral connections have been interchanged, a ground fault may occur at the neutral end under conditions where protection systems may fail to detect the ground fault. Such conditions may result in severe local coil and core iron damage, before the fault developed to the point where the generator is removed from the system by its relay protection.

## 8.7 Extensive downtime—Care of machine

### 8.7.1 Temperature and moisture considerations

Due to their large size and weight, hydro-generators are very vulnerable to moisture condensation from temperature variations. This may cause rusting and affect winding insulation. Most generators are provided with heaters to keep the generator temperature above the surrounding ambient to avoid condensation. Particular attention has to be paid to this feature when extensive shutdown is planned. The heater should be suitably controlled to avoid overheating.

### 8.7.2 Cooling water-supplies

All cooling water should be shut off completely and lines preferably drained to avoid condensation, particularly in the bearing oil reservoirs.

### 8.7.3 Restart of the machine

Depending on the extent of downtime, the components of the machine have to be checked out, particularly the bearings and windings as explained in 7.2.3, 7.6.9, and 8.3.

Copyright © 1999 IEEE. All rights reserved.

Copyright The Institute of Electrical and Electronics Engineers, Inc.
Provided by IHS under license with IEEE
No reproduction or networking permitted without license from IHS
Not for Resale

## 8.8 Safety precautions

Due to the large physical size of hydro-generators including the associated gear such as exciters, field breakers, etc., it is usually the responsibility of the operating personnel to establish detailed safety procedures regarding access to rotating and high-voltage parts, door interlocks, operating procedures, etc.


Copyright © 1999 IEEE. All rights reserved.
Copyright The Institute of Electrical and Electronics Engineers, Inc.
Provided by IHS under license with IEEE
No reproduction or networking permitted without license from IHS
Not for Resale

# Annex A

(informative)

# Bibliography

## Bearings

[B1] Baudry, R. A., "Evolution of Large Thrust Bearing Design," *AIEE Transactions 1958,* vol. 77, pt. III, pp. 502–507.

[B2] Baudry, R. A., Kuhn, E. C., and Cooper, G.D., "Performance of Large Waterwheel Generator Pivoted-Pad Thrust Bearing Determined by Tests Under Normal Operating Conditions," *AIEE Transactions 1959,* vol. 78, pt. IIIB, pp. 1300–1309.

[B3] Johnson, R. C., "Loading Vertical Thrust Bearings," *Allis-Chalmers Engineering Review,* vol. 33, no. 4, 1968.

[B4] Looper, F. C., "Performance of Generator Thrust Bearings at Hoover Power Plant," *IEEE Transactions 1958,* vol. 77, pt. III, pp. 1216–1223.

[B5] Olsen, O. A., "Shaft Currents in AC Machinery," *Power Generation,* Nov. 1949, p. 102.

[B6] Roth, H. H., "Hydro–Generators Thrust Bearings," *Allis–Chalmers Engineering Review,* vol. 33, no. 1, 1968.

## Brakes

[B7] Roth, H. H., "Braking Vertical Generators," *Allis–Chalmers Engineering Review,* vol. 32, no. 3, 1967.

## Thermoset stator windings

[B8] EPRI EL-4983, Project 2330-1, Synchronous Machine Operation with Cut Out Coils.

[B9] EPRI EL-5036, vol. 16, Handbook to Assess the Insulation Condition of Large Rotating Machines.

[B10] *IEEE Transactions,* PAS 1981, no. 7.

[B11] IEEE Working Group Report of Problems with Hydro–Generators Thermoset Stator Windings: Part I—Analysis of Survey, pp. 3284–3291; Part II—Detection, Correction and Prevention, pp. 3292–3300; and Part III—Bibliography, pp. 3301–3303.

## Alignment and balancing

[B12] "Alignment of Vertical Shaft Hydro Units," Power O&M Bulletin 2.[8]

[B13] "Field Balancing of Large Rotating Machinery," Power O&M Bulletin 13A.[9]

[8]Power O&M Bulletins are available from the United States Department of the Interior, Bureau of Reclamation, Building 67, Denver Federal Center, Denver, CO 80225, USA.

[9]See Footnote 7.

--`,,`-`-`,,`,,`,`,,`---

Copyright © 1999 IEEE. All rights reserved.



Copyright The Institute of Electrical and Electronics Engineers, Inc.
Provided by IHS under license with IEEE
No reproduction or networking permitted without license from IHS
Not for Resale

## Protective relaying

[B14] IEEE Std C37.102–1995, IEEE Guide for AC Generator Protection.

## General

[B15] Brown, C., and G. Otte, “Electrical Design Considerations in Pumped Storage Hydro Plants,” *IEEE Transactions,* vol. 82, p. 625.

[B16] Concordia, C., *Synchronous Machines*. New York: Wiley, 1951.

[B17] Concordia, C., C. Brown, Miller, and L. Wuosmaa, “Synchronous Starting of Motor from Generator of Small Capacity,” *IEEE Transactions,* vol. 86, no. 10, p. 1215.

[B18] IEEE Std 1010-1987 (Reaff 1992), IEEE Guide for Control of Hydroelectric Power Plants.

[B19] IEEE Std 1020-1988 (Reaff 1994), IEEE Guide for Control of Small Hydroelectric Power Plants.


Copyright © 1999 IEEE. All rights reserved.
Copyright The Institute of Electrical and Electronics Engineers, Inc.
Provided by IHS under license with IEEE
No reproduction or networking permitted without license from IHS
Not for Resale