IEEE Std 487-2000
(Revision of
IEEE Std 487-1992)

IEEE Recommended Practice for the Protection of Wire-Line Communication Facilities Serving Electric Supply Locations

Sponsor

Power Systems Communications Committee
of the
IEEE Power Engineering Society

Approved 21 September 2000

IEEE-SA Standards Board

Abstract: Workable methods for protecting wire-line communication circuits entering electric supply locations are presented. This document covers: the electric supply location environment; protection apparatus; services types, reliability, service performance objective classifications, and transmission considerations; protection theory and philosophy; protection configurations; installation and inspection; and safety.
Keywords: electric supply locations, high-voltage tower, power stations, protection, wire-line communication

The Institute of Electrical and Electronics Engineers, Inc.
3 Park Avenue, New York, NY 10016-5997, USA

Copyright © 2001 by the Institute of Electrical and Electronics Engineers, Inc.
All rights reserved. Published 17 August 2001. Printed in the United States of America.

Print: ISBN 0-7381-2609-8 SH94877
PDF: ISBN 0-7381-2610-1 SS94877

No part of this publication may be reproduced in any form, in an electronic retrieval system or otherwise, without the prior written permission of the publisher.

Copyright The Institute of Electrical and Electronics Engineers, Inc.
Provided by IHS under license with IEEE
No reproduction or networking permitted without license from IHS
Not for Resale

IEEE Standards documents are developed within the IEEE Societies and the Standards Coordinating Committees of the IEEE Standards Association (IEEE-SA) Standards Board. The IEEE develops its standards through a consensus development process, approved by the American National Standards Institute, which brings together volunteers representing varied viewpoints and interests to achieve the final product. Volunteers are not necessarily members of the Institute and serve without compensation. While the IEEE administers the process and establishes rules to promote fairness in the consensus development process, the IEEE does not independently evaluate, test, or verify the accuracy of any of the information contained in its standards.

Use of an IEEE Standard is wholly voluntary. The IEEE disclaims liability for any personal injury, property or other damage, of any nature whatsoever, whether special, indirect, consequential, or compensatory, directly or indirectly resulting from the publication, use of, or reliance upon this, or any other IEEE Standard document.

The IEEE does not warrant or represent the accuracy or content of the material contained herein, and expressly disclaims any express or implied warranty, including any implied warranty of merchantability or fitness for a specific purpose, or that the use of the material contained herein is free from patent infringement. IEEE Standards documents are supplied "**AS IS**."

The existence of an IEEE Standard does not imply that there are no other ways to produce, test, measure, purchase, market, or provide other goods and services related to the scope of the IEEE Standard. Furthermore, the viewpoint expressed at the time a standard is approved and issued is subject to change brought about through developments in the state of the art and comments received from users of the standard. Every IEEE Standard is subjected to review at least every five years for revision or reaffirmation. When a document is more than five years old and has not been reaffirmed, it is reasonable to conclude that its contents, although still of some value, do not wholly reflect the present state of the art. Users are cautioned to check to determine that they have the latest edition of any IEEE Standard.

In publishing and making this document available, the IEEE is not suggesting or rendering professional or other services for, or on behalf of, any person or entity. Nor is the IEEE undertaking to perform any duty owed by any other person or entity to another. Any person utilizing this, and any other IEEE Standards document, should rely upon the advice of a competent professional in determining the exercise of reasonable care in any given circumstances.

Interpretations: Occasionally questions may arise regarding the meaning of portions of standards as they relate to specific applications. When the need for interpretations is brought to the attention of IEEE, the Institute will initiate action to prepare appropriate responses. Since IEEE Standards represent a consensus of concerned interests, it is important to ensure that any interpretation has also received the concurrence of a balance of interests. For this reason, IEEE and the members of its societies and Standards Coordinating Committees are not able to provide an instant response to interpretation requests except in those cases where the matter has previously received formal consideration.

Comments for revision of IEEE Standards are welcome from any interested party, regardless of membership affiliation with IEEE. Suggestions for changes in documents should be in the form of a proposed change of text, together with appropriate supporting comments. Comments on standards and requests for interpretations should be addressed to:

Secretary, IEEE-SA Standards Board
445 Hoes Lane
P.O. Box 1331
Piscataway, NJ 08855-1331
USA

Note: Attention is called to the possibility that implementation of this standard may require use of subject matter covered by patent rights. By publication of this standard, no position is taken with respect to the existence or validity of any patent rights in connection therewith. The IEEE shall not be responsible for identifying patents for which a license may be required by an IEEE standard or for conducting inquiries into the legal validity or scope of those patents that are brought to its attention.

IEEE is the sole entity that may authorize the use of certification marks, trademarks, or other designations to indicate compliance with the materials set forth herein.

Authorization to photocopy portions of any individual standard for internal or personal use is granted by the Institute of Electrical and Electronics Engineers, Inc., provided that the appropriate fee is paid to Copyright Clearance Center. To arrange for payment of licensing fee, please contact Copyright Clearance Center, Customer Service, 222 Rosewood Drive, Danvers, MA 01923 USA; (978) 750-8400. Permission to photocopy portions of any individual standard for educational classroom use can also be obtained through the Copyright Clearance Center.

Copyright The Institute of Electrical and Electronics Engineers, Inc.
Provided by IHS under license with IEEE
No reproduction or networking permitted without license from IHS
Not for Resale

Introduction

(This introduction is not a part of IEEE Std 487-2000, IEEE Recommended Practice for the Protection of Wire-Line Communication Facilities Serving Electric Supply Locations.)

Wire-line communication facilities serving electric supply locations often require special high-voltage protection against the effects of fault-produced ground potential rise or induced voltages, or both. Some of the telecommunication services are used for control and protective relaying purposes and may be called upon to perform critical operations at times of power system faults. This constitutes a major challenge in the design and protection of the telecommunications system because power system faults can result in the introduction of interfering voltages and currents into the telecommunication circuit at the very time when the circuit is most urgently required to perform its function. Even when critical services are not involved, special high-voltage protection may be required for personnel safety and plant protection at times of power system faults. Effective protection of any wire-line telecommunications circuit requires coordinated protection on all circuits provided over the same telecommunication cable.

This recommended practice presents workable methods for protecting wire-line communication circuits entering electric supply locations. It is important to note that special high-voltage protection for the purpose of personnel safety and plant protection may be required even when critical services are not involved. In the case of leased circuits *mutually agreeable* methods for the installation of protective equipment owned by either party are presented.

This recommended practice has been prepared by the Wire-Line Subcommittee of the Power Systems Communications Committee of the IEEE Power Engineering Society. This standard represents the consensus of both power and communications engineers.

At the time of approval of this standard, the membership of the working group was:

P. Pool, *Chair*

R. L. Knight, Sr., *Technical Editor*

T. Conser	H. Held	R. Nelson
E. M. Duckworth, Jr.	R. L. Knight, Sr.	H. Nerhood
G. Grano	R. Langhage	P. Pool
D. P. Hartman		L. Young

The following members of the balloting group voted on this standard.

S. H. Bouchey	R. L. Knight, Sr.	G. L. Nissen
W. J. Buckley	R. Langhage	P. E. Pool
E. M. Duckworth, Jr.	A. P. S. Meliopoulos	R. H. Setchell
G. Grano	R. E. Nelson	M. S. Simon
D. P. Hartman	H. E. Nerhood	L. S. Young
H. C. Held		

Copyright © 2001 IEEE. All rights reserved.

Copyright The Institute of Electrical and Electronics Engineers, Inc.
Provided by IHS under license with IEEE
No reproduction or networking permitted without license from IHS
Not for Resale

--`,,`,,`-`-`,,`,,`,`,,`---

Copyright The Institute of Electrical and Electronics Engineers, Inc.
Provided by IHS under license with IEEE
No reproduction or networking permitted without license from IHS

Not for Resale

Contents

1. Overview 1

1.1 Scope 1
1.2 Purpose 2

2. References 2

3. Definitions 3

4. High voltage environment 5

4.1 Coupling 6
4.2 Disturbances 6

5. Protection apparatus 21

6. Service types, reliability, service performance objective (SPO) classifications, and transmission considerations 23

6.1 Service types 24
6.2 Service performance objective classifications 24
6.3 Transmission considerations 26

7. Protection theory and philosophy 26

7.1 Special wire-line protection design requirements 27
7.2 Dedicated cable 28
7.3 Resistive balance 29
7.4 Concepts and concerns 29
7.5 General-use telecommunication cable in the electric supply location GPR zone of influence 29

8. Protection configurations 30

8.1 Ground potential rise plus induced voltage levels 30
8.2 Basic protection system 31
8.3 Protection configurations employing isolation devices 33
8.4 General isolation protection configuration 35
8.5 Protection configurations employing neutralizing transformers 37
8.6 Protection configuration employing neutralizing in parallel with isolation on separate pairs 39
8.7 Protection configuration employing neutralizing in tandem with isolation 40

Copyright © 2001 IEEE. All rights reserved.

Copyright The Institute of Electrical and Electronics Engineers, Inc.
Provided by IHS under license with IEEE
No reproduction or networking permitted without license from IHS
Not for Resale

8.8 Protection configuration employing modular high dielectric and optic isolators 41
8.9 Protection practices for electric supply locations services 42

9. Installation and inspection considerations 48

9.1 Installation considerations related to neutralizing transformers 48
9.2 Periodic inspection 50

10. Safety 51

10.1 General safety considerations 51
10.2 Safety considerations in equipment design 52
10.3 Safety related to installation and maintenance 53

11. Summary 53

Annex A (informative) Characteristics of protection apparatus 55

Annex B (informative) Comparison of carbon blocks, gas tubes, and solid-state protectors 94

Annex C (informative) Protection of isolating, drainage, and neutralizing transformers and other apparatus by surge arresters 97

Annex D (informative) Transmission characteristics and SPO requirements for various communication channels 102

Annex E (informative) DC offset waveform development 103

Annex F (informative) High dielectric optic isolation systems. 109

Annex G (informative) Bibliography. 111

Copyright © 2001 IEEE. All rights reserved.
Copyright The Institute of Electrical and Electronics Engineers, Inc.
Provided by IHS under license with IEEE
No reproduction or networking permitted without license from IHS
Not for Resale

IEEE Recommended Practice for the Protection of Wire-Line Communication Facilities Serving Electric Supply Locations

1. Overview

Wire-line telecommunication[1] facilities serving electric supply locations often require special high-voltage protection against the effects of fault-produced ground potential rise or induced voltages, or both. Some of the telecommunication services are used for control and protective relaying purposes and may be called upon to perform critical operations at times of power system faults. This presents a major challenge in the design and protection of the telecommunication system because power system faults can result in the introduction of interfering voltages and currents into the telecommunication circuit at the very time when the circuit is most urgently required to perform its function. Even when critical services are not involved, special high-voltage protection may be required for both personnel safety and plant protection at times of power system faults. Effective protection of any wire-line telecommunication circuit requires coordinated protection on all circuits provided over the same telecommunication cable.

1.1 Scope

This recommended practice presents engineering design practices for special high-voltage protection systems intended to protect wire-line telecommunication facilities serving electric supply locations.

The following topics are included in this document:

a) A description of the electric supply locations environment, i.e., ground potential rise (GPR), induced voltages, lightning, and switching transients

b) A discussion of special high-voltage protection devices

c) Definitions of service types and service performance objectives for electric supply locations telecommunication services

[1]In general "wire-line telecommunication" will be referred to throughout this document as "telecommunication."

Copyright © 2001 IEEE. All rights reserved.

Copyright The Institute of Electrical and Electronics Engineers, Inc.
Provided by IHS under license with IEEE
No reproduction or networking permitted without license from IHS
Not for Resale

d) Special protection theory and philosophy

e) Special protection system design guidelines

f) Personnel safety considerations

g) Grounding

h) Cables with metallic members

Other telecommunication alternatives such as radio and optical fiber systems are excluded from this document.

1.2 Purpose

This recommended practice presents workable methods for the protection of wire-line telecommunication facilities serving electric supply locations. In general, special protective measures, handling procedures, and administrative procedures are necessary to provide for personnel safety, protection against damage to telecommunication facilities and terminal equipment, and reliability of service. Disturbances may arise from a number of causes, including the following:

a) Ground (earth) potential rise

b) Longitudinal induction into the serving telecommunication facilities

c) Electrical contact between power and telecommunication conductors

d) Lightning surges and switching transients induced into the telecommunication system

Divided and differing opinions exist between and within the various administrations and users regarding the merits of any one protection method, voltage limits, and equipment design characteristics. This standard is not intended to supplant specific or general instructions contained in the practices of any utility, or in any agreement between a telecommunication and a power utility. Readers of this standard should evaluate all alternative procedures, methods, voltage limits, and equipment characteristics for their own use. Different administrations and users will use either peak or rms for specifying voltage levels.

In the case of leased facilities, *mutually agreeable* methods for the design and installation of protective equipment that may be owned by either party are recommended.

2. References

This recommended practice shall be used in conjunction with the following publications:

IEEE C37.93-1987, IEEE Guide for Power System Protection Relay Applications of Audio Tones Over Telephone Channels.[2]

IEEE Std 80-2000, IEEE Guide for Safety in AC Substation Grounding.

IEEE Std 81-1983, IEEE Guide for Measuring Earth Resistivity, Ground Impedance, and Earth Surface Potentials of a Ground System Part I: Normal Measurements.

[2]IEEE publications are available from the Institute of Electrical and Electronics Engineers, 445 Hoes Lane, P.O. Box 1331, Piscataway, NJ 08855-1331, USA (http://www.standards.ieee.org/).

Copyright © 2001 IEEE. All rights reserved.
Copyright The Institute of Electrical and Electronics Engineers, Inc.
Provided by IHS under license with IEEE
No reproduction or networking permitted without license from IHS
Not for Resale

IEEE Std 81.2-1991, IEEE Guide for Measurement of Impedance and Safety Characteristics of Large, Extended, or Interconnected Grounding Systems.

IEEE Std 367-1996, IEEE Recommended Practice for Determining the Electric Supply Location Ground Potential Rise and Induced Voltage from a Power Fault.

IEEE Std 776-1992 (Reaff 1998), IEEE Recommended Practice for Inductive Coordination of Electric Supply and Communications Lines.

IEEE Std 789-1988 (Reaff 1994), IEEE Standard Performance Requirements for Communications and Control Cables for Applications in High-Voltage Environments.

3. Definitions

This clause contains key terms as they are used in this recommended practice.

3.1 carbon block protector: An assembly of two or three carbon blocks and air gaps designed to a specific breakdown voltage. These devices are normally connected to telecommunication circuits to provide overvoltage protection and a current path to ground during such overvoltage.

3.2 conductive (resistive) coupling: *See:* **coupling.**

3.3 coupling: The mode of propagation of disturbing energy from a power system to a telecommunications system. There are three forms of coupling between the two systems: magnetic (inductive) coupling, electric (capacitive) coupling, and conductive (resistive) coupling. In addition, coupling by electromagnetic radiation exists and is associated with propagation of radiation fields, e.g., radio frequency interference (RFI), electromagnetic pulse (EMP), and corona.

3.4 drainage units or drainage reactors: Center-tapped inductive devices designed to relieve conductor-to-conductor and conductor-to-ground voltage stress by draining extraneous currents to ground. They are also designed to serve the purpose of a mutual drainage reactor, forcing near-simultaneous protector-gap operation.

3.5 electric (capacitive) coupling: *See:* **coupling.**

3.6 electric supply locations: For the content of this practice, any building, separate space, or site in which electric supply equipment is located that may be subjected to the effects of ground potential rise (GPR). This includes generation, transformation, conversion, switching, and delivery facilities.

3.7 gas-filled protector (gas tube): A discharge gap between two or more electrodes hermetically sealed in a ceramic or glass envelope.

3.8 ground potential rise (GPR): The product of a ground electrode impedance, referenced to remote earth, and the current that flows through that electrode impedance.

3.9 high-dielectric cable: Cable that provides high-voltage insulation between conductors, between conductors and shield, and between shield and earth.

3.10 high-voltage disconnect jack: A device used to disconnect cable pairs for testing purposes. Used to help safeguard personnel from remote ground potentials.

Copyright © 2001 IEEE. All rights reserved.

Copyright The Institute of Electrical and Electronics Engineers, Inc.
Provided by IHS under license with IEEE
No reproduction or networking permitted without license from IHS
Not for Resale

3.11 high-voltage environment (HVE): A location requiring caution because it may experience a ground potential rise (GPR) from power line fault currents, and/or lightning strike energy.

3.12 high-voltage interface (HVI): Protective apparatus that provides electrical isolation of wire-line communications conductive paths.

3.13 high-voltage isolating relay: A device that provides for the repeating of dc on/off signals while maintaining longitudinal isolation. High-voltage isolating relays may be used in conjunction with isolating transformers or may be used as stand-alone devices for dc tripping or dc telemetering.

3.14 horn gap: An air-gap metal electrode device, consisting of a straight vertical round electrode and an angularly shaped round electrode. In the case of a telephone pair, there is one common grounded central straight vertical electrode and two angular electrodes, one for each side of the pair. The gaps are usually adjustable. Horn gaps are used usually outdoors on open-wire lines exposed to high-voltage power transmission lines and in conjunction with isolating or drainage transformers. They are also frequently used alone out along the open-wire pair. They provide protection against both lightning and power contacts.

3.15 insulating transformers: *See:* **isolating (insulating) transformers.**

3.16 isolating (insulating) transformers: Transformers that provide longitudinal (common mode) isolation of the telecommunication facility. They can be designed for use in a combined isolating–drainage transformer configuration and also can be designed for a low longitudinal to metallic conversion.

3.17 isolating transformer with high-voltage isolating relay: An assembly that provides protection for standard telephone service and consists basically of an isolating transformer and a high-voltage isolating relay. The transformer provides a path for voice and ringing frequencies while the relay provides a means for repeating dc signals around the transformer. A locally supplied battery or dc power supply is required for operation of the telephone and relay.

3.18 magnetic (inductive) coupling: *See:* **coupling.**

3.19 neutralizing transformers and reactors: Devices that introduce a voltage into a circuit pair to oppose an unwanted voltage. These devices neutralize extraneous longitudinal voltages resulting from ground potential rise, or longitudinal induction, or both, while simultaneously allowing ac and dc metallic signals to pass. These transformers or reactors are primarily used to protect telecommunication or control circuits at supply locations or along routes where exposure to power line induction is a problem, or both.

3.20 optic coupling device: An isolation device using an optical link to provide the longitudinal isolation. Circuit arrangements on each side of the optical link convert the electrical signal into an optical signal for transmission through the optical link and back to an electrical signal. Various circuit arrangements provide one-way or two-way transmission and permit transmission to the various combinations of voice and/or dc signaling used by the power industry. The optical link may be either a quartz rod or a short length of optic fiber. Single-channel optic coupling devices may be used in conjunction with other isolation devices in protection systems.

3.21 reliability (power system protective relaying): A combination of dependability and security.

3.22 solid-state protector: A protective device that employs solid-state circuit elements that provide a combination of high speed voltage and current sensing. These protectors are a combination of voltage clamps (avalanche diodes) and crowbar devices (multilayer diodes similar to SCRs), and are designed

Copyright © 2001 IEEE. All rights reserved.
Copyright The Institute of Electrical and Electronics Engineers, Inc.
Provided by IHS under license with IEEE
No reproduction or networking permitted without license from IHS
Not for Resale

to limit the voltage to a specific value and to reduce current flow to low values of milliamperes within nanoseconds. They are usually integrated into the terminal apparatus.

3.23 spark gap: An air dielectric between two electrodes that may be a combination of several basic shapes that is used to protect telecommunication circuits from damage due to voltage stress in excess of their dielectric capabilities. It may or may not be adjustable.

3.24 surge arrester: A device that guards against dielectric failure of protection apparatus due to lightning or surge voltages in excess of their dielectric capabilities and serves to interrupt power follow current.

3.25 thunderstorm day: A day during which thunder is heard at least once at a specified observation point.

4. High voltage environment

There are two different electric supply location environments that shall be considered but the application of the recommended practice should not be limited to these:

a) Electric power stations:
These locations generally utilize an extensive ground grid designed so that all grounded structures within the station can be connected to a common grid, thereby minimizing potential difference in the system during a lightning stroke or a power fault. However, the potential difference between this grounding system and other distant grounding systems may be substantial and a significant portion of these surge currents will be redirected to any wire-line telecommunications cables entering this environment.

b) Power line transmission and distribution towers or poles:
These locations generally utilize a smaller grounding electrode system with a common arrangement being one ground rod per tower leg incorporated into the grounding system of the equipment placed at the tower base. Thus, the grounding systems at towers or poles usually have a significantly higher resistance to ground than those at electric power stations. Transmission lines also have a higher probability of being struck by lightning, thereby increasing the chances of fault producing surges. A significant portion of these surge currents will be redirected to any wire-line telecommunications cables entering this environment.

At these types of locations, when a power system ground fault or lightning strike occurs, all or some of the current returns via the earth through the grounding electrode and produces a potential difference between the grounding electrode and remote earth. This potential difference is defined as the ground potential rise. The fault current may be symmetrical or may have some degree of asymmetry, depending on such factors as voltage phase angle at fault initiation, location of the fault, impedance to ground and other power system characteristics. The impedance to ground depends primarily on the geometry of the grounding electrode, the connections to it and the resistivity of the soil in the vicinity of the site.

The GPR at an electric supply location may be reduced substantially because of its physical connections to remote ground points by means of overhead ground (earth, static, or sky wires) conductor (ogc), multi-grounded neutrals, counterpoises, cable shields, rail lines, etc. These connections affect the distribution of fault currents through the system grounding paths and also affect the total site impedance to remote earth.

A rigorous analysis of ground potential rise calculations at the power system fundamental frequency is presented in IEEE Std 367-1996.

Copyright © 2001 IEEE. All rights reserved.

Copyright The Institute of Electrical and Electronics Engineers, Inc.
Provided by IHS under license with IEEE
No reproduction or networking permitted without license from IHS Not for Resale

4.1 Coupling

Coupling refers to the mode of propagation of disturbing energy from the power system to the telecommunications system.

Three forms of coupling between the two systems should be considered, i.e., magnetic (inductive) coupling, electric (capacitive) coupling, and conductive (resistive) coupling. In addition, coupling by electromagnetic radiation exists and is associated with the propagation of radiation fields, e.g., radio frequency interference, electromagnetic pulse, and corona.

Magnetic (inductive) coupling, particularly under power line fault conditions, is significant when several kilometers of parallel or close to parallel routing of both systems are considered. The power line fault current flowing to ground is coupled magnetically to the longitudinal circuit of the telecommunication system and results in a distributed longitudinal voltage being induced in the telecommunication circuit. The induced voltage is calculated by multiplying the inducing power line current by the mutual impedance between the two systems. The inducing current is a function of the fault location and the power system characteristics. The mutual impedance is a function of such variables as the frequency, length of parallel, separation, soil resistivity, and shielding conductors (see IEEE Std 367-1996 for methods of calculating magnetic (inductive) coupling). Heterogeneous soil conditions, the presence of shielding conductors, and resistances to ground of shielding conductors are usually difficult to characterize accurately; however, they have a significant effect on the resulting level of induced voltage. Therefore, a large spread in values can occur between actual and estimated induced voltages because not all parameters can be assessed easily or accurately.

Capacitive coupling at power system frequencies is significant only where telecommunication lines are not shielded with a grounded metallic shield. Since most wire-line telecommunication cables are metallically shielded, capacitive coupling is minimized.

Conductive (resistive) coupling is significant where the power and telecommunications grounding systems are bonded together or where grounds are mutually coupled due to their proximity to each other. In general, for wire telecommunications facilities, resistive coupling can be minimized by avoiding joint use. If joint use cannot be avoided, adequate bonding of the grounding systems should be ensured in situations in which the power line and its associated protective relaying circuits follow the same route.

The probability of a power conductor falling and causing a problem with a telecommunication cable in or near a substation is very low. The problem itself is no worse than any joint-use condition.

4.2 Disturbances

4.2.1 Ground potential rise

4.2.1.1 Theoretical background

With reference to Figure 1, the current causing GPR that is created by the returning fault current through the electric supply location ground grid impedance has the following form (assuming the phase currents are equal and in balance prior to the fault):

$$i_{\mathrm{GPR}}(t) = \frac{V_{\mathrm{pk}}}{\sqrt{(R_{\mathrm{s}} + R_{\mathrm{TG}})^2 + \omega^2 (L_{\mathrm{s}} + L_{\mathrm{TG}})^2}} \left[\cos(\omega t + \alpha - \theta) - \cos(\alpha - \theta) e^{-\beta t}\right]$$

Copyright © 2001 IEEE. All rights reserved.
Copyright The Institute of Electrical and Electronics Engineers, Inc.
Provided by IHS under license with IEEE
No reproduction or networking permitted without license from IHS
Not for Resale

where

$\beta = \frac{R_s + R_{TG}}{L_s + L_{TG}} \triangleq \frac{R}{L}$,

$\omega = 2\pi f = 377$ rad/s at 60 Hz,

α = angle of the power line voltage at the initiation of the fault, in radians,

R_s = power system equivalent resistance, in ohms,

L_s = power system equivalent inductance, in henries,

R_{TG} = total ground resistance at the point where GPR is being evaluated, in ohms,

L_{TG} = total ground inductance at the point where GPR is being evaluated, in henries,

V_{pk} = peak value of system voltage (0 Ω source impedance assumed),

$i_{GPR}(t)$ = GPR-producing current including the transient component, in amperes,

θ = loop impedance angle = $\tan^{-1}\left(\frac{\omega}{\beta}\right) = \tan^{-1}\left(\frac{\omega L}{R}\right)$, in radians,

t = time, in seconds.

The GPR appearing across the $R_{TG} + j\omega L_{TG}$ can be calculated as follows:

$$V_{GPR}(t) = R_{TG}\, i_{GPR}(t) + L_{TG}\frac{di_{GPR}(t)}{dt}$$

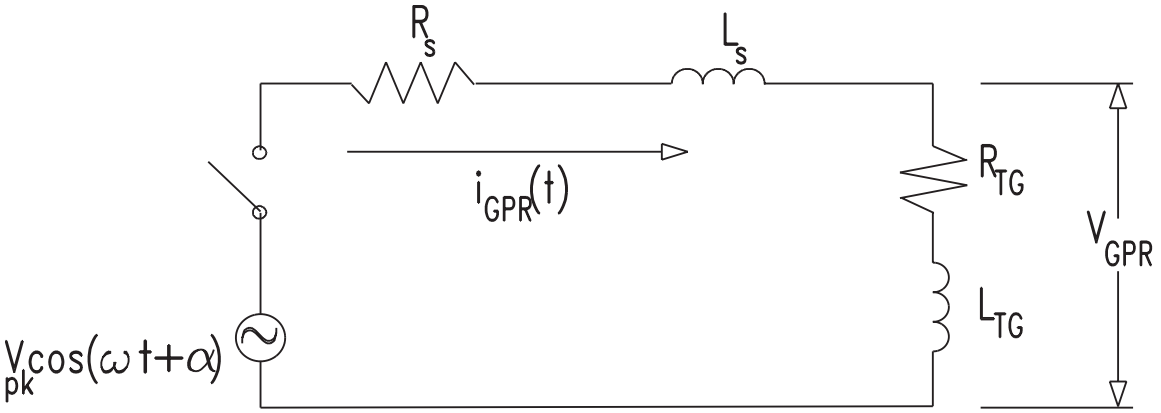

Figure 1—Simplified loop for GPR calculation

$$\frac{di_{GPR}(t)}{dt} = \frac{V_{pk}}{|Z|}\left[-\omega \sin(\omega t + \alpha - \theta) + \beta \cos(\alpha - \theta)e^{-\beta t}\right]$$

$$\therefore\ V_{GPR}(t) = \frac{V_{pk}}{|Z|}\left[R_{TG}\cos(\omega t + \alpha - \theta) - R_{TG}\cos(\alpha - \theta)e^{-\beta t} + \omega L_{TG}\sin(\omega t + \alpha - \theta) + \beta L_{TG}\cos(\alpha - \theta)e^{-\beta t}\right]$$

Copyright © 2001 IEEE. All rights reserved.

Copyright The Institute of Electrical and Electronics Engineers, Inc.
Provided by IHS under license with IEEE
No reproduction or networking permitted without license from IHS
Not for Resale

$$= \frac{V_{pk}}{|Z|}\left[R_{TG}\cos(\omega t + \alpha - \theta) + \omega L_{TG}\sin(\omega t + \alpha - \theta) - \cos(\alpha - \theta)(R_{TG} - \beta L_{TG})e^{-\beta t}\right]$$

$$|Z| = \sqrt{(R_S + R_{TG})^2 + \omega^2(L_S + L_{TG})^2} = \sqrt{R^2 + (\omega L)^2}$$

Simplifying further, let

$$|Z_{TG}| \triangleq \sqrt{R_{TG}^2 + \omega^2 L_{TG}^2};\ \cos\theta_{TG} \triangleq \frac{R_{TG}}{|Z_{TG}|};\ \sin\theta_{TG} \triangleq \frac{\omega L_{TG}}{|Z_{TG}|}$$

$$\therefore R_{TG} = \cos\theta_{TG}|Z_{TG}|$$

$$\omega L_{TG} = \sin\theta_{TG}|Z_{TG}|$$

Let $\omega t + \alpha - \theta = a$

$$V_{GPR}(t) = \frac{V_{pk}}{|Z|}\left[|Z_{TG}|\cos(\omega t + \alpha - \theta + \theta_{TG}) - \cos(\alpha - \theta)(R_{TG} - \beta L_{TG})e^{-\beta t}\right]$$

then

$$\frac{V_{GPR}(t)}{|Z|} = \left[R_{TG}\cos a + \omega L_{TG}\sin a - \cos(\alpha - \theta)(R_{TG} - \beta L_{TG})e^{-\beta t}\right]$$

$$= \frac{V_{pk}}{|Z|}\left[|Z_{TG}|(\cos\theta_{TG}\cos a - \sin\theta_{TG}\sin a) - \cos(\alpha - \theta)(R_{TG} - \beta L_{TG})e^{-\beta t}\right]$$

$$= \frac{V_{pk}}{|Z|}\left[|Z_{TG}|\{(\cos\theta_{TG} + a\} - \cos(\alpha - \theta)(R_{TG} - \beta L_{TG})e^{-\beta t}\right]$$

where

$\theta_{TG} = \tan^{-1}\dfrac{\omega L_{TG}}{R_{TG}}$ is the angle of the impedance, Z_{TG}.

The two components of the expression for GPR are the steady-state and transient (dc offset) terms. The quantity L/R is the inverse time constant of the transient term. Multiplication of this quantity by the angular frequency, ω, yields the X/R ratio of the power system at the point of fault. The X/R ratio gives an indication of the time required for the dc transient to decay and of the volt–time area contributed by the transient term (see A.5.1.8). Looking back towards the source, under line-to-ground fault conditions, X/R ratios may range from 1 to 2 for low-voltage lines to as high as 75 for extra-high-voltage (EHV) lines. Refer to IEEE Std 367-1996 for information on the effective X/R ratio, which is not the transmission line X/R.

The initial peak amplitude of the transient term and the maximum peak amplitude of the GPR depend upon the quantity cos (α−θ). The angle, θ, is fixed by power system parameters. The phase angle of the power line voltage, α, at the initiation of the fault, therefore becomes the controlling factor. For large values of X/R, the angle, θ, approaches π/2 radians, and the power line voltage fault angle, α, which produces maximum offset, approaches zero (0) radians.

Copyright © 2001 IEEE. All rights reserved.
Copyright The Institute of Electrical and Electronics Engineers, Inc.
Provided by IHS under license with IEEE
No reproduction or networking permitted without license from IHS
Not for Resale

4.2.1.2 Practical implications

When a fault to ground occurs on a transmission or distribution line terminating in a grounded-neutral transformer bank at an electric supply location or substation, fault current will flow from the electric supply location ground grid to the system neutral by way of the station grounding system. Since the grounding system has a finite impedance-to-remote earth, it will experience a rise in potential with respect to remote earth because of this ground return fault current. The magnitude of the GPR depends upon such factors as the impedance-to-ground of the station grounding system, the magnitude and location of the fault, the fault impedance, the impedance of the transformers feeding the fault, the presence or absence of ground wires on the line (insulated or not), and other grounding structures in the area. Also, a fault occurring at a station without a grounded-neutral transformer or at a tower location may produce a GPR as long as there is a ground source on the system and there exists a ground current path to the fault.

While the impedances of station ground grids can range from 0.01 to 10 Ω or more, they are normally quite small, usually less than 1 Ω. Bus fault currents, however, may sometimes be very large, in the order of 70 000 A or higher. GPRs of several thousand volts, therefore, are possible. Ground electrodes at tower locations are generally smaller in size and have a higher grid resistance than at electric power stations.

The GPR consists of a steady-state symmetrical component and may contain a decaying dc transient component (sometimes called the dc offset, see Annex E). The magnitude of the dc transient component lies between zero and the peak value of the steady-state symmetrical component. It is dependent upon time, the ratio of the effective power system inductive reactance and resistance as determined at the point of fault (X/R ratio), and the phase angle of the power line voltage at the initiation of the fault. The rate of decay of the dc transient component is determined by the effective X/R ratio as well. The combined dc and ac components will always have a peak value below twice the peak value of the ac component. Figure 2 shows an illustration of a nonsymmetrical GPR waveform and the two components.

The reader of this document should refer to IEEE Std 367-1996 for more detailed discussion.

For a discussion of worst case volt–ampere area in the context of neutralizing transformers, see A.5.1.8.

NOTE—Power line faults are generally initiated at or close to peak voltage. For such faults, the transient dc component and the dc offset factor are minimal. Refer to IEEE Std 367-1996 and Annex E of this document. For purposes of this recommended practice, the words "asymmetrical" and "nonsymmetrical" are synonymous.

Figure 3(a) through Figure 3(d) illustrate a theoretical GPR distribution from the edge (where the protection requirements are usually specified) of four simple ground grids for a number of different earth resistivity models. These curves are easily reproduced using the EPRI[3] System Grid Analysis (SGA) program. This has been found to agree with certain measured data for stations not influenced by external metallic paths such as pipes, overhead ground (static or sky wires) conductors (ogc), power neutrals, etc. Where external grounds exist, this practice recommends that the fall of potential impedance measurements referenced in IEEE Std 81-1983 and IEEE Std 81.2-1991 be used to generate the proper curves for a specific grid.

Two values of multi-layered soils and one uniform layer soil are provided for in these tables (Figure 3(a) through Figure 3(d)), 100 m-Ω and 20 m-Ω and 100 m-Ω and 1000 m-Ω.

NOTE—For multi-layered soils, depth of the upper layer = 20 ft or 6 m.

[3]Electric Power Research Institute, P. O. Box 10412, Palo Alto, CA 94303, USA.

Copyright © 2001 IEEE. All rights reserved.

Copyright The Institute of Electrical and Electronics Engineers, Inc.
Provided by IHS under license with IEEE
No reproduction or networking permitted without license from IHS
Not for Resale

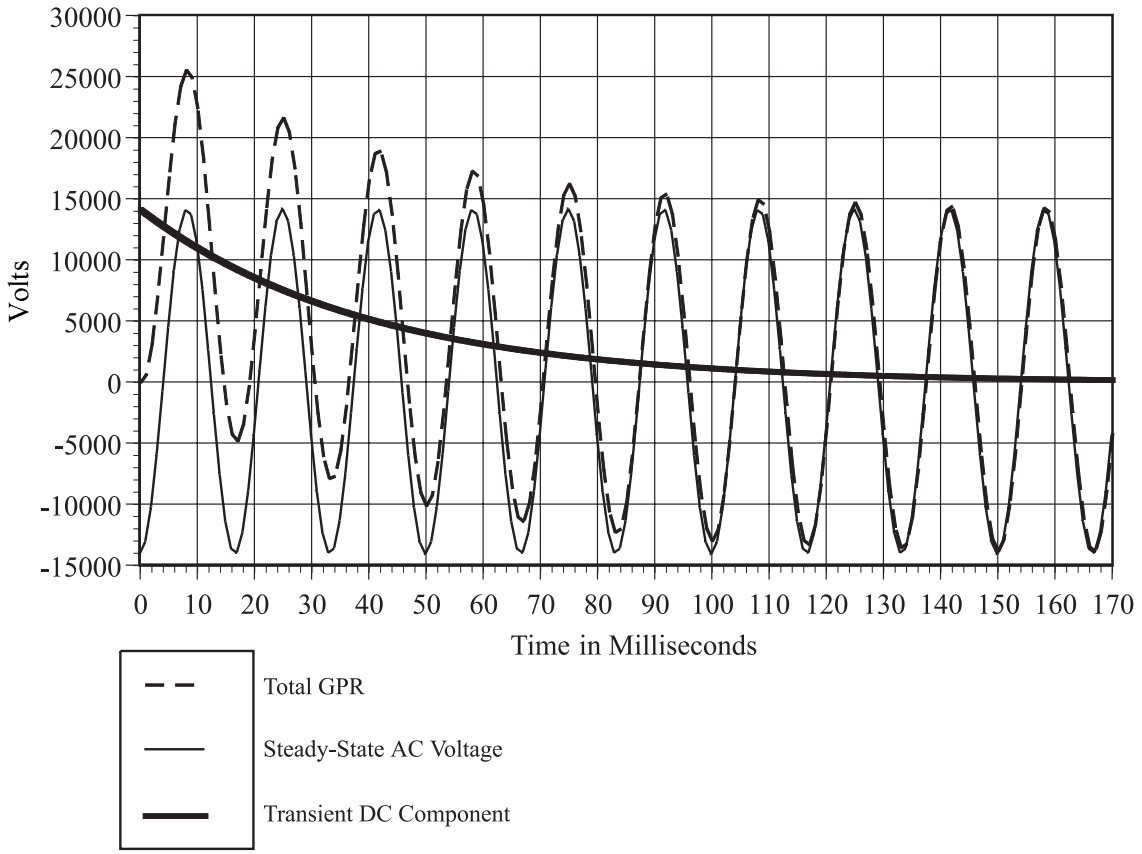

Figure 2—Illustration of a nonsymmetrical GPR waveform

The area surrounding the electric supply location that is raised in potential above a remote (or true) earthing point is referred to as the GPR zone of influence. In practice, 300 V is often used as the boundary of this zone of influence. For a more complete discussion on this topic, refer to IEEE Std 367-1996.

The potential of the ground around the electric supply location, with respect to remote earth, falls off with distance from the station grounding system as indicated by the equipotential lines in Figure 4. Excluding alternate return paths, this potential is roughly inversely proportional to the distance from the station grounding system. For simplicity, the equipotential lines are shown in Figure 4 as concentric circles. Due to the irregularity of the grounding system, variations in the earth resistivity around the station, and the presence of metallic underground structures such as pipes and cables, the equipotential lines will not be circular as shown.

A telecommunication circuit, extending from the electric supply location to some remote point, is also shown in Figure 4. In this example, the protective device is installed at the electric supply location end of the telecommunication circuit, with the protector ground terminal connected to the electric supply location grounding system. At some remote point on the telecommunication circuit, such as the far end or some intermediate point, another protective device may be installed. In the latter case, the protector ground terminal is connected to what might be regarded as remote ground. These protectors serve to limit the voltage that may exist between the wire-line telecommunication circuit and local ground at the protector location. Therefore, protectors are installed for the purpose of safeguarding personnel and preventing damage to property and equipment that might be caused by induction, lightning, GPR, or direct contact with power circuits.

Copyright © 2001 IEEE. All rights reserved.
Copyright The Institute of Electrical and Electronics Engineers, Inc.
Provided by IHS under license with IEEE
No reproduction or networking permitted without license from IHS
Not for Resale

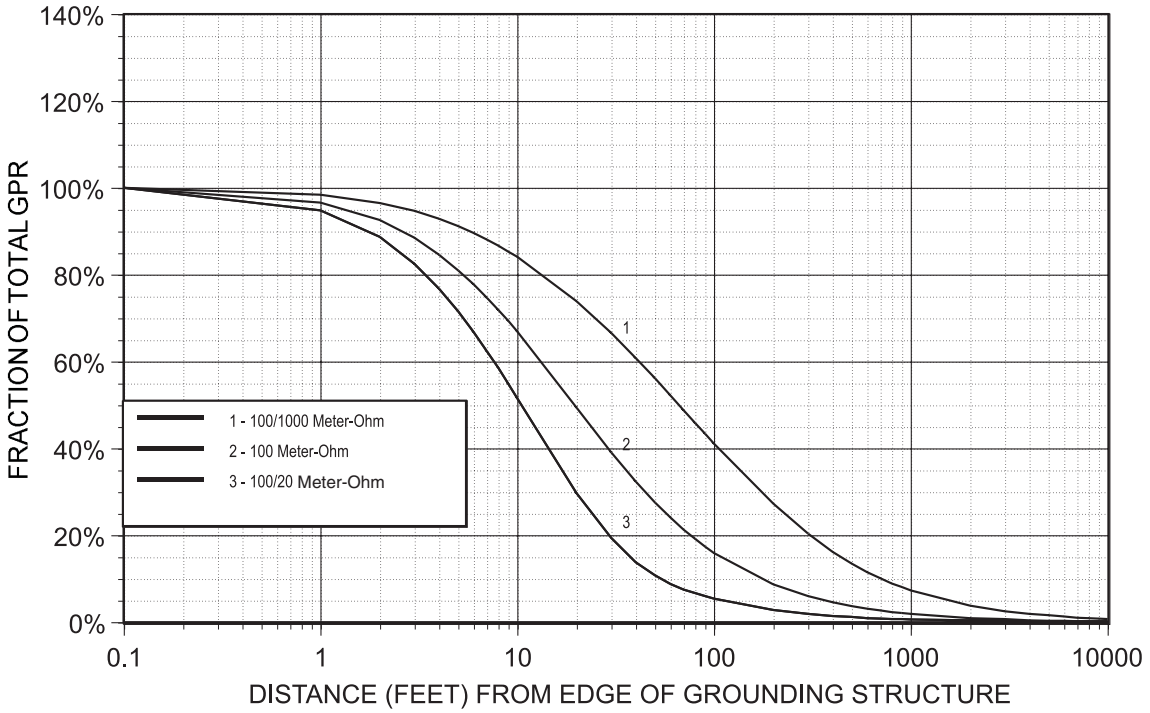

1600 square feet

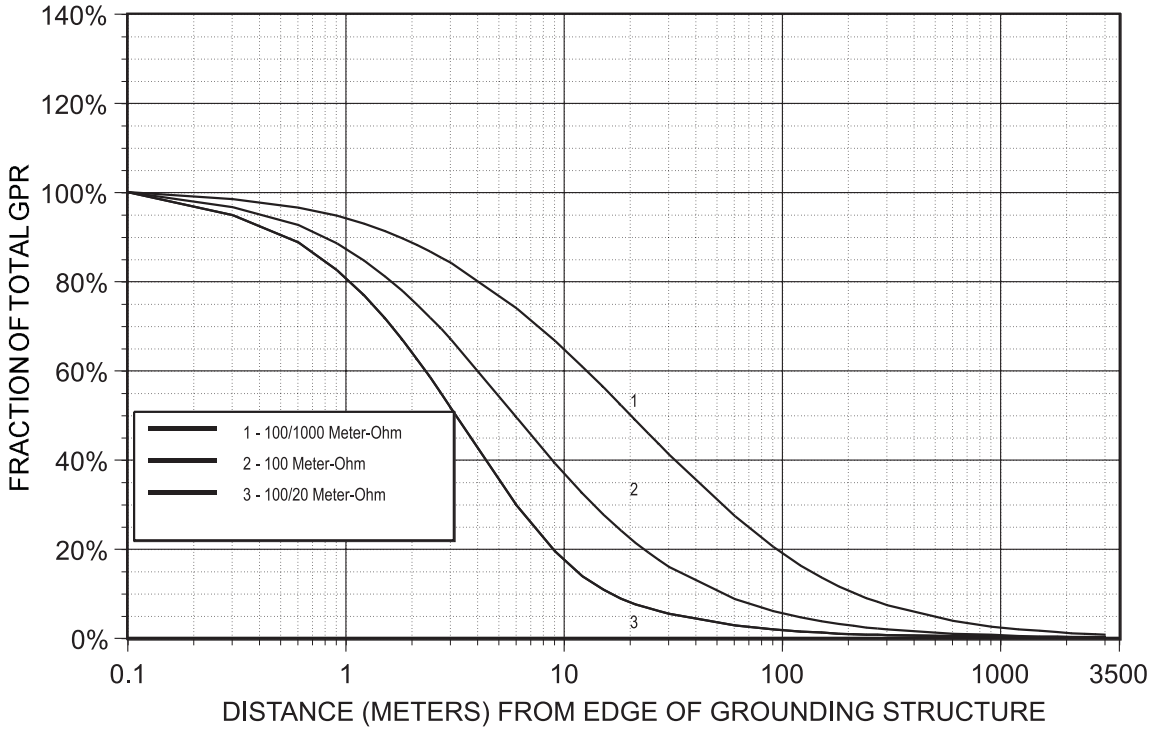

150 square meters

Figure 3a—(inch-pound and metric)—Earth potential distribution from edge of electric supply location grid with respect to a remote earthing point

--`,,`,,`-`-`,,`,,`,`,,`---

Copyright © 2001 IEEE. All rights reserved.

Copyright The Institute of Electrical and Electronics Engineers, Inc.
Provided by IHS under license with IEEE
No reproduction or networking permitted without license from IHS
Not for Resale

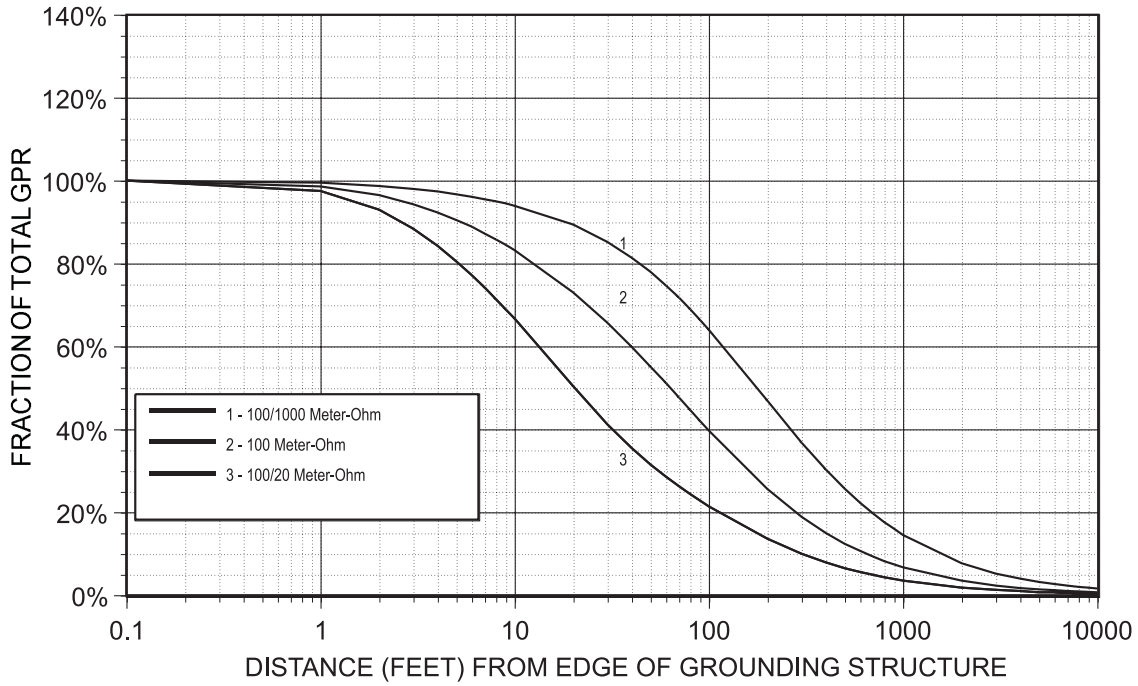

35 000 square feet

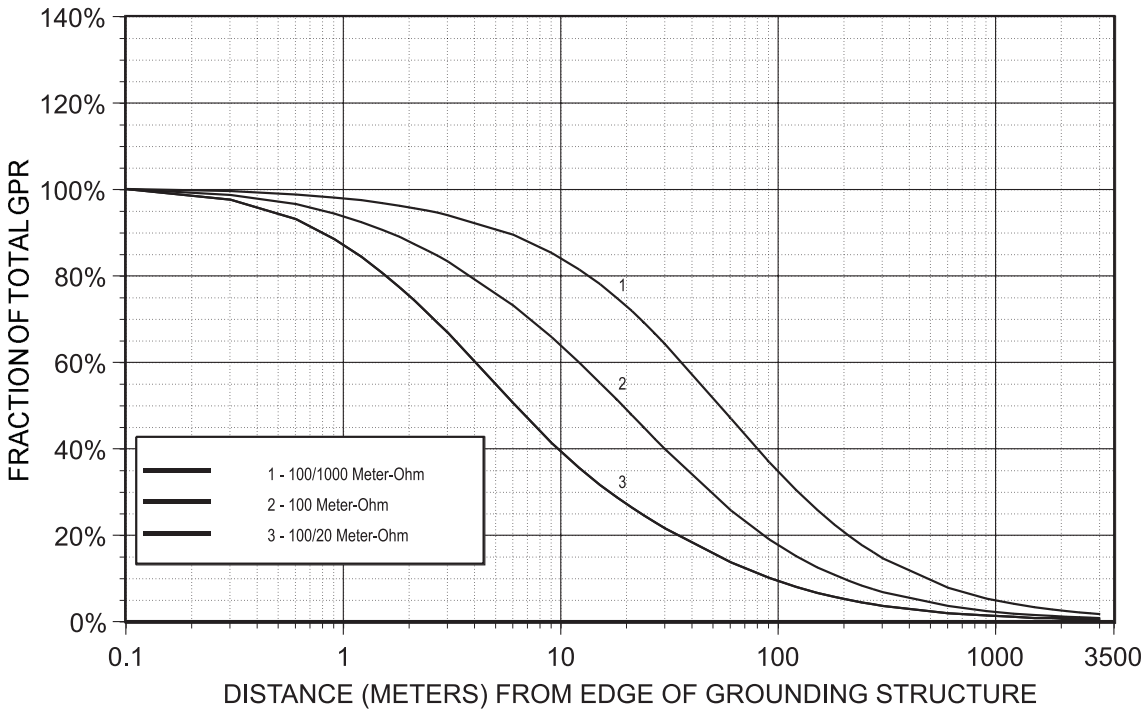

3250 square meters

Figure 3b—(inch-pound and metric)—Earth potential distribution from edge of electric supply location grid with respect to a remote earthing point

Copyright © 2001 IEEE. All rights reserved.
Copyright The Institute of Electrical and Electronics Engineers, Inc.
Provided by IHS under license with IEEE
No reproduction or networking permitted without license from IHS
Not for Resale

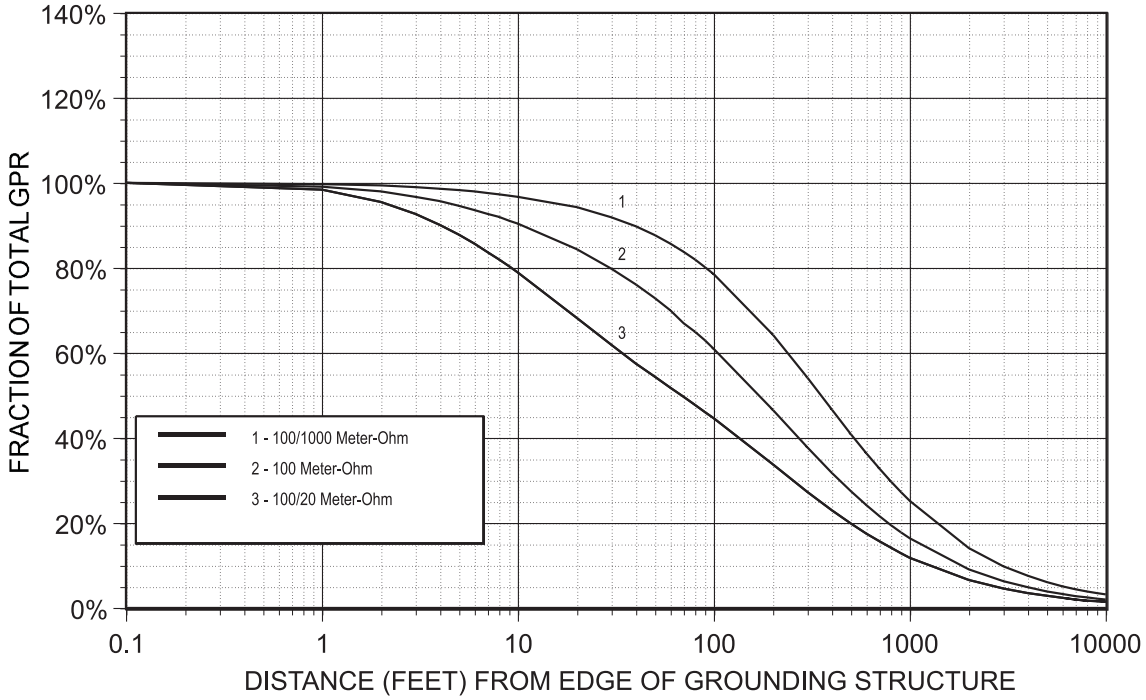

290 000 square feet

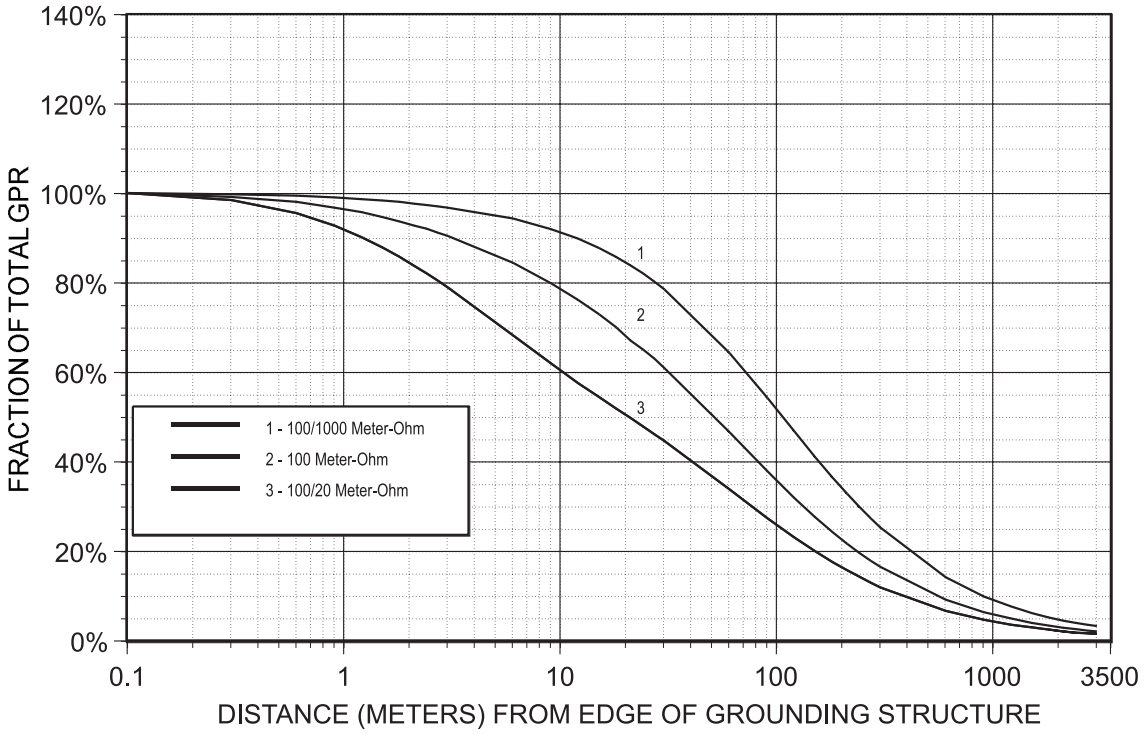

27 000 square meters

Figure 3c—(inch-pound and metric)—Earth potential distribution from edge of electric supply location grid with respect to a remote earthing point

Copyright © 2001 IEEE. All rights reserved.

Copyright The Institute of Electrical and Electronics Engineers, Inc.
Provided by IHS under license with IEEE
No reproduction or networking permitted without license from IHS
Not for Resale



935 000 square feet

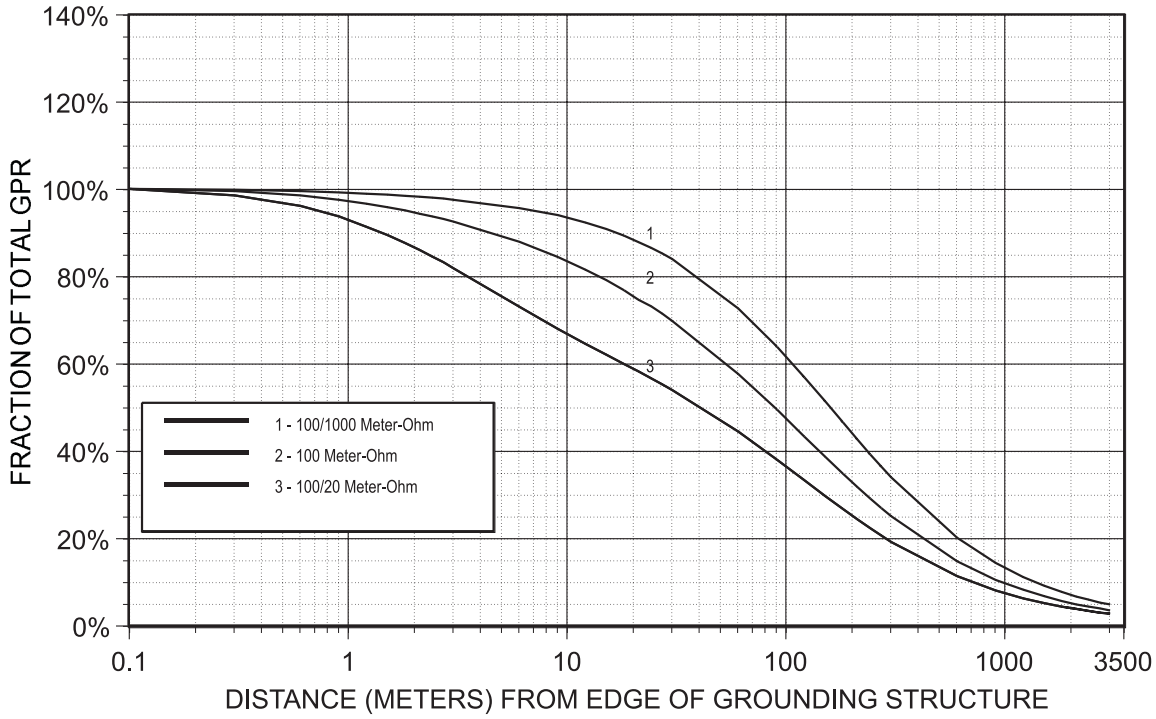

87 000 square meters

Figure 3d—(inch-pound and metric)—Earth potential distribution from edge of electric supply location grid with respect to a remote earthing point

Copyright © 2001 IEEE. All rights reserved.
Copyright The Institute of Electrical and Electronics Engineers, Inc.
Provided by IHS under license with IEEE
No reproduction or networking permitted without license from IHS
Not for Resale

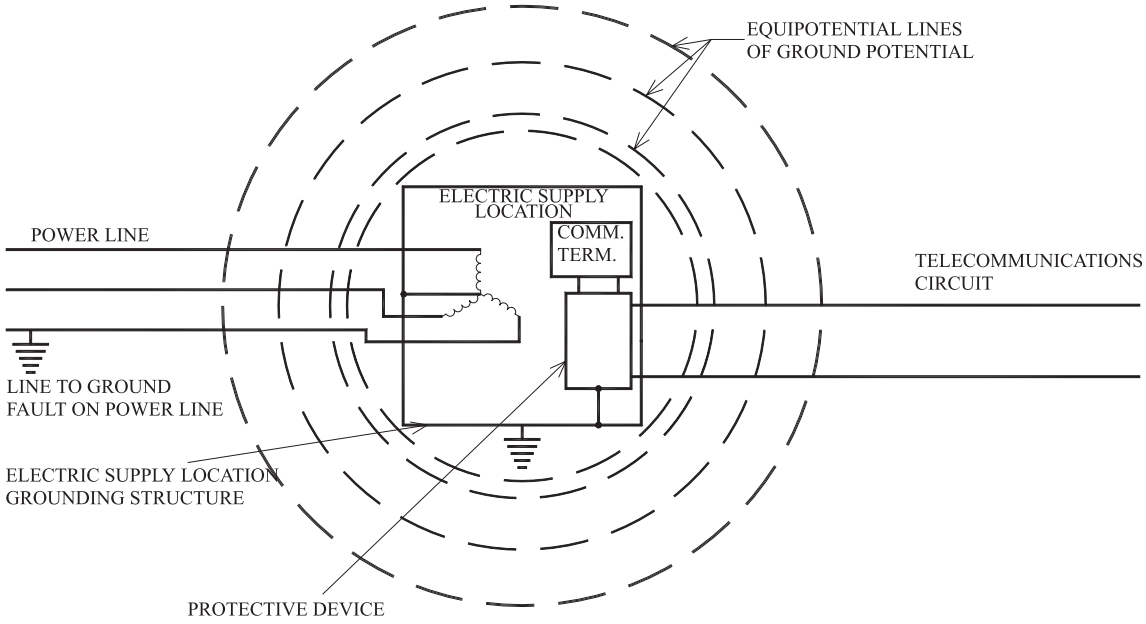

Figure 4—Theoretical illustration of electric supply location ground potential rise with conventional protection on telecommunication circuits

When there is a GPR at the electric supply location, a potential difference that is equal to this rise will exist between the ground terminals of the protectors at the two locations on the telecommunication circuit. This difference in potential will cause (if of sufficient magnitude) the protectors on the telecommunication circuit to operate, possibly ground permanently or damage the telecommunication circuit, and cause personnel hazards.

In order to prevent this ground-return current from circulating over the telecommunication circuit and its protective devices, methods have been devised that are discussed later in this standard. In applying these methods, it is necessary to determine the expected GPR as accurately as possible.

Cables are exposed to the effects of GPR whether they are entering the GPR zone to serve the electric supply location, to serve subscribers within the zone of influence, or are merely passing through the zone of influence. In each case, the metallic shield-to-core and insulating outer jacket dielectric withstand (strength) should be considered with respect to the expected GPR value at the cable location. It is important that protector and cable shield grounds not be placed in this zone without consideration of the effects of GPR at the proposed grounding location.

The dedicated cable to the substation always enters the area of highest GPR, while the general use cable may pass through the zone of influence at some lower potential level. Refer to IEEE Std 789-1988 for a more detailed discussion on such cables. Furthermore, protector or arc noise should be more carefully avoided on substation cables carrying protective relaying signals, see IEEE C37.93-1987. If protective devices are used properly and metallic members of the cable can be assured of being insulated from substation ground, then possible hazards from GPR will be greatly minimized.

The protection scheme should not be installed to cope merely with the existing fault current possibilities. Provision should also be made for future power system expansion or an increase in fault current levels, or change in station ground grid impedance. Considerations for telecommunications cables passing through the zone of influence of an electric supply location are covered in A.11.

Copyright © 2001 IEEE. All rights reserved.

Copyright The Institute of Electrical and Electronics Engineers, Inc.
Provided by IHS under license with IEEE
No reproduction or networking permitted without license from IHS
Not for Resale

4.2.2 Longitudinal induction

Wire-line telecommunication facilities entering supply locations are frequently routed close to power lines. Such facilities are then subject to the interfering induction effects of the power lines under both normal and fault conditions. Satisfactory electrical coordination between the two systems should be achieved under both normal and fault conditions on the power system. In addition to normal and fault conditions, longitudinal induction caused by disturbing harmonic current flow in the power system can cause interfering induction effects that should be coordinated. This effect is dealt with by other IEEE Standards such as IEEE Std 367-1996 and IEEE Std 776-1992. Such coordination is particularly essential between cables containing protective relaying circuits and the power lines that are being protected by those circuits. The power line fault condition is most severe because inductive interference during this condition adds vectorially to that produced by the GPR. See IEEE Std 367-1996 for methods of calculating the vectorial summation. This may substantially increase the stress on the telecommunication facilities and the associated protection.

4.2.3 Lightning

Transient and GPR analysis of lightning strikes is considered more complex than those for 50/60 Hz.

From the standpoint of lightning protection, the three most important parameters are the probability of lightning occurrence, its intensity, and its rate of change (see [B2]). The first parameter is expressed in terms of lightning flash density measured as the yearly number of lightning flashes to an area of 1 km^2; the second parameter is expressed as the peak amplitude of lightning current in kA; and the last parameter is expressed as the rise time in the front of the lightning current wave. In view of past records, isokeraunic levels (yearly number of thunderstorm days) rather than the flash density are readily available in many countries. Approximate empirical relations are used for conversion between the two measures. The relation is given by the following equation:

$$N_g = KT_d^{1.3} \tag{1}$$

where

N_g = ground flash density (flashes/(km^2· year)),

T_d = annual number of thunderstorm days,

K = constant that ranges from 0.023 to 0.04. On the North American continent, the value of 0.04 is used.

The incidence of lightning to most supply locations is about the same as the incidence of lightning to about 1.5 km of buried telephone cable. For example, for an isokeraunic level of 30, there were 0.7 strokes per year to a 310×310 m (96 000 m^2) electric supply location, 0.4 strokes per year to a 225×225 m (50 000 m^2) station, and 0.07 strokes per year to a 9600 m^2 substation (see [B26]). The ground grids of 95–98% of all substations are smaller than 9600 m^2. This compares with 0.1 to 0.2 strokes per 1.5 km of buried cable for the same isokeraunic level (see [B27]).

As a general rule, large supply locations receive more strokes because of the larger area of the station; however, the effects of strokes are usually less severe than those for smaller stations. If lightning strikes or enters an electric supply location on the shielding system, the area and diversity of conduction paths of the ground grid and tower system help to readily disperse the stroke current (see [B15]). If a shielding failure occurs, currents in the order of 2 to 20 kA are observed.

Copyright © 2001 IEEE. All rights reserved.
Copyright The Institute of Electrical and Electronics Engineers, Inc.
Provided by IHS under license with IEEE
No reproduction or networking permitted without license from IHS
Not for Resale

Current severity of lightning strokes is affected by structure height (see [B6]). Since most electric supply location shielding systems are lower than 30 m, stroke current severity for a electric supply location and a buried cable are about the same. Thus, hazards to telecommunication facilities from lightning strokes to supply locations are about the same as from lightning strokes to a length of buried cable between 1.5 and 3 km. Where microwave towers are located on electric supply location sites, telecommunication facilities become more exposed because tall structures are more susceptible to lightning. The reader should keep in mind that lightning strokes to tall structures have statistically smaller current crest values.

Time variations of lightning voltages and currents take place in the range of microseconds. For the purpose of testing, the wave shape of lightning stroke voltage shown in Figure 5 is normally used. The figure shows that the lightning stroke voltage is characterized by a very steep wavefront, in which the voltage rises to its maximum or crest value in a very short period of time, and by a decay period occupying a considerably longer length of time. Lightning stroke voltages and currents are usually described by two numbers. The first number is related to the time in microseconds for the wave, starting from virtual zero, to reach its crest, indicated by T_1 in Figure 5. The second number is the time in microseconds, also measured from the virtual zero, taken by the wave to decay to half its crest magnitude, as shown by T_2 in Figure 5. These times are characteristically $1.2\times50\,\mu s$ for the "standard" voltage waveform, and $8\times20\,\mu s$ for the "standard" current wave form (see [B16]). In actual lightning strokes, the front of the wave may be even steeper, while the decay of its tail may be considerably longer.

Time rate of change of lightning current is primarily responsible for the voltage induced by a lightning stroke in nearby apparatus. In addition, steepness of the wave determines, for the apparatus, the level of its withstand voltage. Typical values of voltage steepness used in tests lie in the range of 100 to 200 kV/μs. Steeper wave fronts of naturally occurring lightning have been observed.

Some idea of the statistical values of crest current, collected on the basis of measurements made in different parts of the world, are shown in Figure 6. While some strokes exceed 200 kA in crest current, 50% of events have currents that do not exceed 30 kA. IEEE uses, in its work, a lightning current crest probability relation expressed by Equation 2.

$$P_I = \frac{1}{1 + \left(\frac{I}{31}\right)^{2.6}} \tag{2}$$

where

P_I = probability of exceeding stroke current, I,

I = stroke current, in kA.

The incidence of lightning varies widely in different parts of the world and, indeed, within countries the size of the United States and Canada. This factor should be given consideration in estimating the exposure of electrical power and telecommunication plants to lightning. Data accumulated by the meteorological services of the Canadian and United States governments have been plotted on the isokeraunic map presented in Figure 7. Information contained in this map can be used with good advantage for generalized decisions regarding lightning protection. A thunderstorm day is defined as a day during which thunder is heard at least once at a specified observation point. The fact that thunder can be heard means that the storm is close enough to constitute a hazard to the electrical plant in the vicinity of the observation point.

Recent studies have found that a closer approximation to lightning flash density can be achieved by the use of thunderstorm hours per year. This measure better describes the extent and the duration

Copyright © 2001 IEEE. All rights reserved.

Copyright The Institute of Electrical and Electronics Engineers, Inc.
Provided by IHS under license with IEEE
No reproduction or networking permitted without license from IHS
Not for Resale

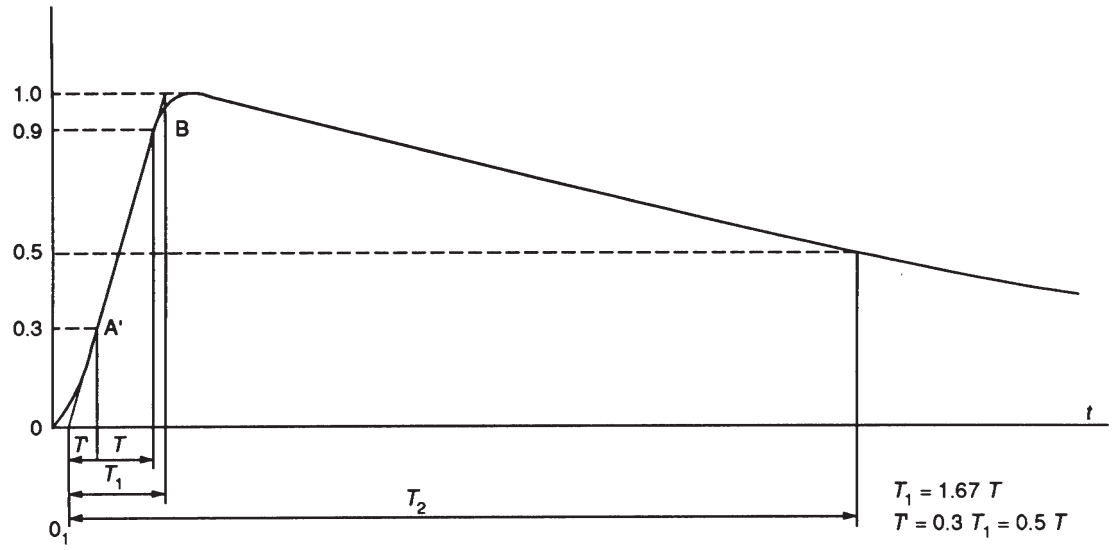

Figure 5—Definition of a voltage impulse wave

NOTE—0_1 is the virtual zero obtained as the intersection with the zero axis of a straight line through point A′ and point B on the front of the voltage wave at 30% and 90% crest value (or on the front of a current wave at 10% and 90% crest value).

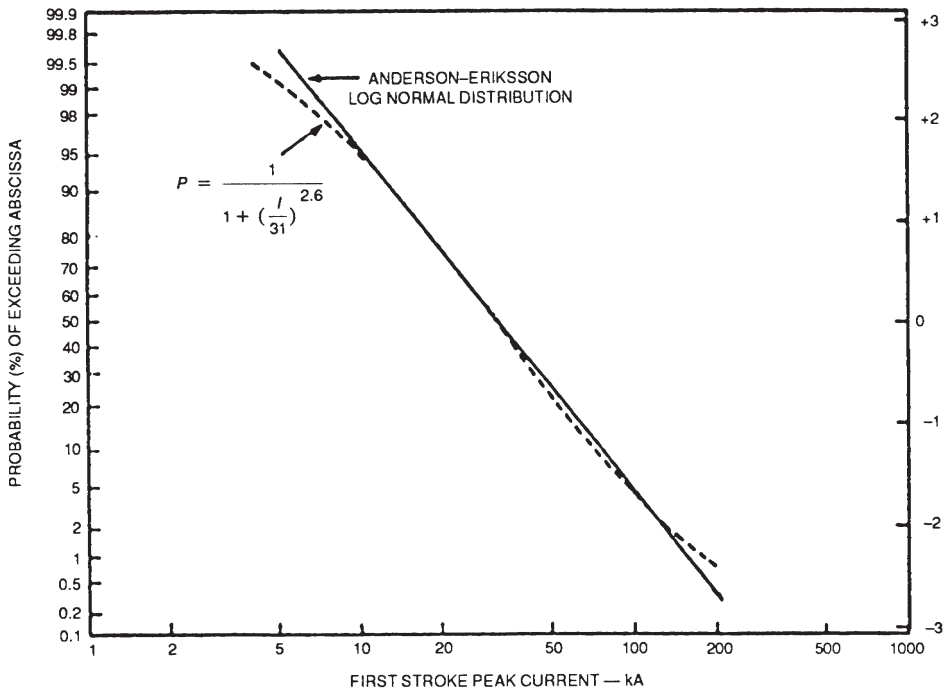

Figure 6—Cumulative probability distribution of stroke current magnitude in negative lightning flashes

Copyright © 2001 IEEE. All rights reserved.
Copyright The Institute of Electrical and Electronics Engineers, Inc.
Provided by IHS under license with IEEE
No reproduction or networking permitted without license from IHS
Not for Resale

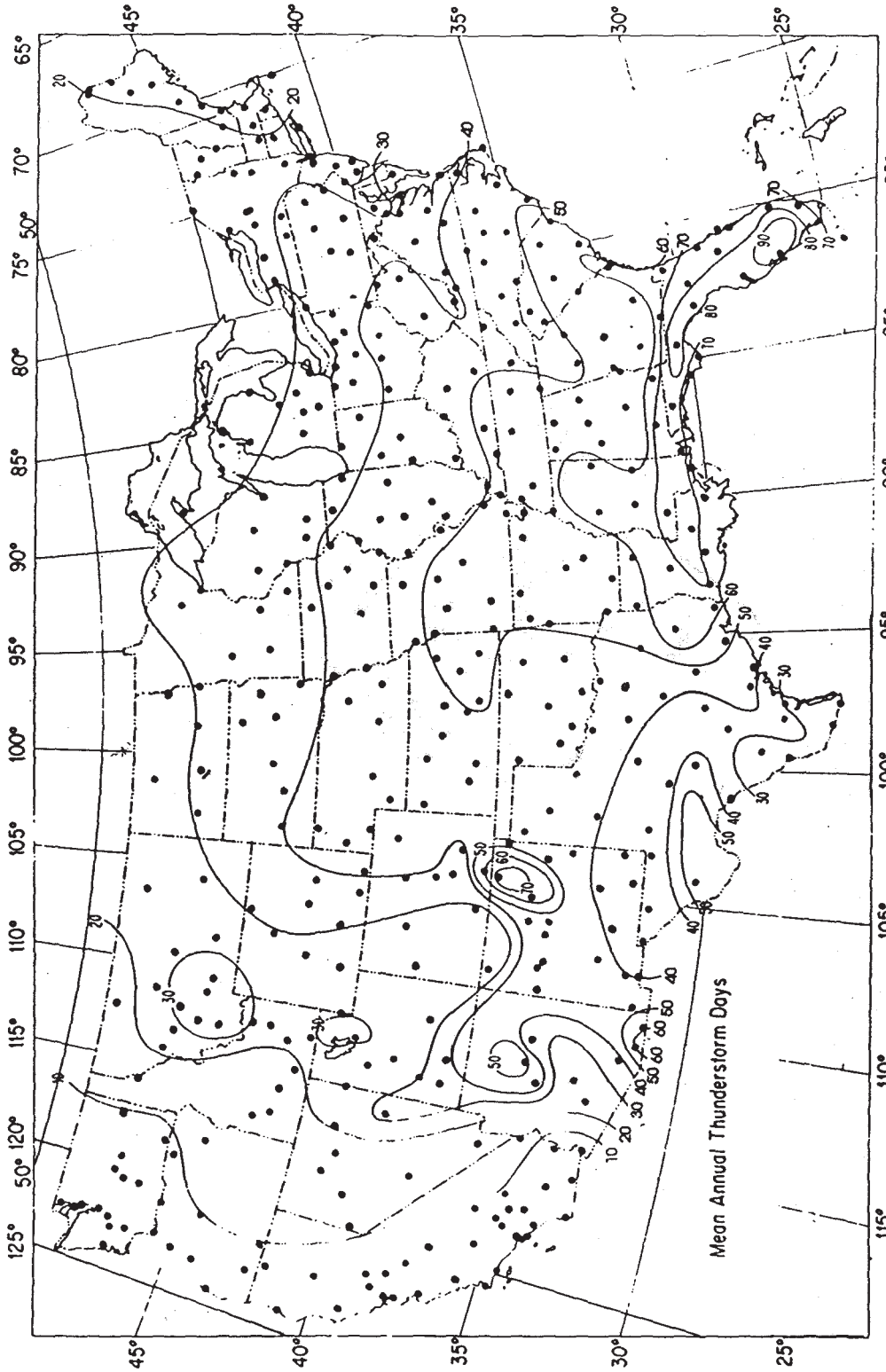

Figure 7—Isokeraunic chart for the United States (Reprinted with permission from [B17])

Copyright © 2001 IEEE. All rights reserved.

Copyright The Institute of Electrical and Electronics Engineers, Inc.
Provided by IHS under license with IEEE
No reproduction or networking permitted without license from IHS
Not for Resale

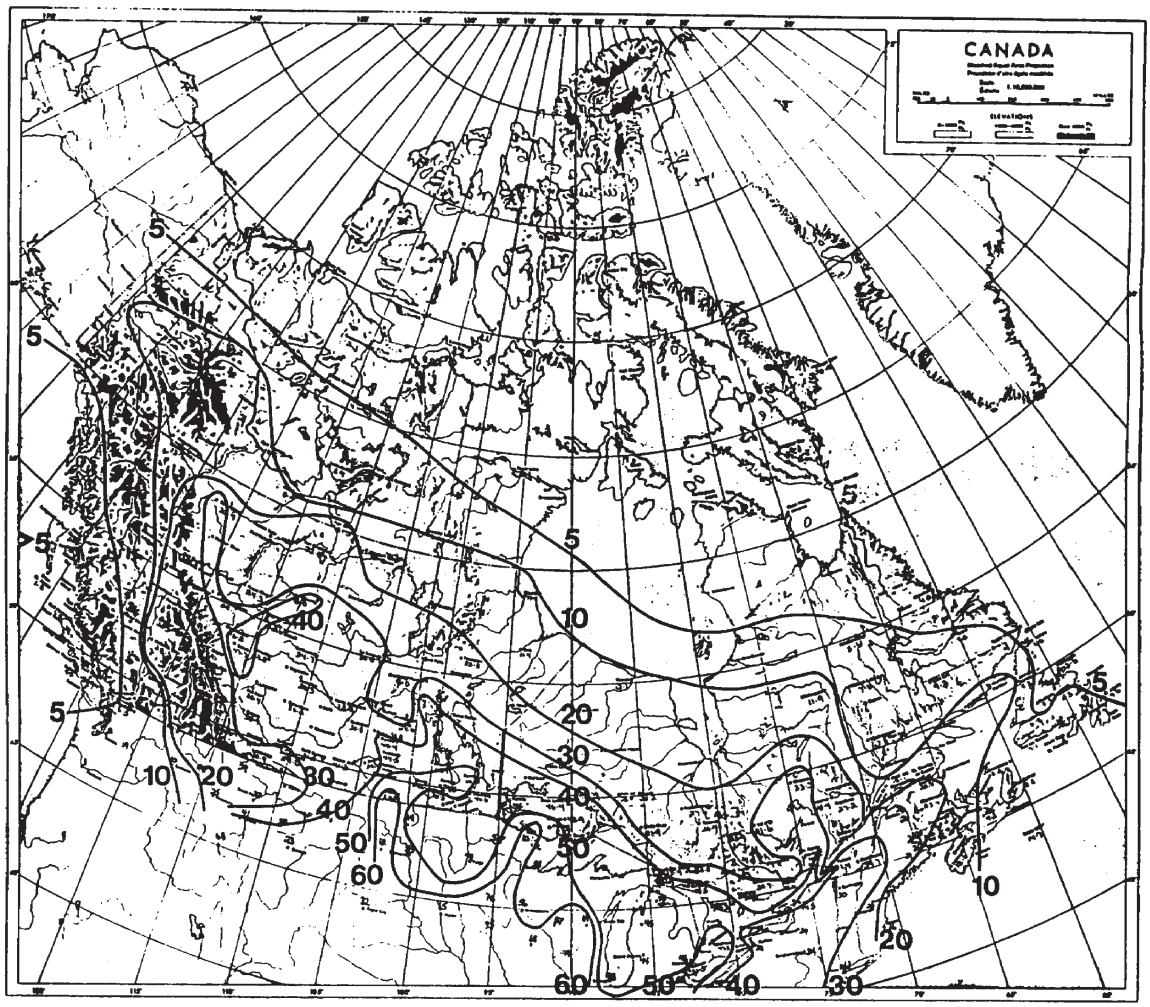

Figure 8—Annual thunderstorm-hour map of Canada (Reprinted with permission from CEA 077D-184A [B4])

of each lightning storm and, for that reason, better characterizes the number of lightning flashes per year to the area. A thunderstorm hour map for Canada is shown in Figure 8 (see [B4]).

The relation between thunderstorm hours in a region and lightning flash density is given by Equation 3.

$$N_g = 0.054 T_h^{1.1}$$

where

N_g = ground flash density (flashes/(km^2·year)),

T_h = annual number of thunderstorm hours,

See [B19] for more recent information about lightning.

4.2.4 Switching surges

High-voltage systems can cause electromagnetic field disturbances and induce transient potentials in control and telecommunication circuits located within the electric station switchyard. These transients

Copyright © 2001 IEEE. All rights reserved.
Copyright The Institute of Electrical and Electronics Engineers, Inc.
Provided by IHS under license with IEEE
No reproduction or networking permitted without license from IHS
Not for Resale

may be caused by the restrike characteristics of arcs that exist during the energization or interruption of a high-voltage circuit and the resonance with lumped circuit reactances within the switchyard. These reactances are attributed to potential transformers, capacitive coupling devices, power factor capacitors, reactors, power transformers, and high-voltage power cables.

Typical operations of a high-voltage electric system that cause these transient switching surges are

a) Switching shunt capacitors
b) Overvoltage flashover of lightning arresters
c) Restrike of circuit breakers
d) Switching of a section of extra-high-voltage (EHV) bus by an air-break disconnect switch

The transients are identified (see [B12]) as high frequency, high-voltage, and short time duration with a decaying amplitude characteristic. Resonant frequencies from 200 kHz to 2.9 MHz with an amplitude of 12 kV and lasting for 10 to 100 ms have been measured on control circuits. Pulse trains lasting up to 3 s have been observed.

Longitudinal induced voltages caused by these transient switching surges can be kept well below 1000 V if the cable is in an iron or steel conduit and is shielded and paralleled with, for example, 2/0 bare copper wire. Both shield and parallel copper wire should be grounded at each end. Telecommunication cable should be oriented perpendicular to any high-voltage bus overhead of the cable route.

4.2.5 Other disturbances

Other higher frequency disturbances include those caused by showering arc (contact arcing), restriking faults, electrostatic discharge, and corona. These disturbances usually do not interfere with wire-line facilities but may result in distortion and scattering of radio fields and TV and radio interference.

5. Protection apparatus

Wire-line telecommunication circuits entering electric supply locations may be owned by either the electric power utility or the end user, or are leased from a telephone company. In the case of leased telecommunications circuits, the protective devices located at the high-voltage interface are considered part of the network. However, with the permission of the telephone company, the customer may own the protective device. In some jurisdictions involving leased telephone facilities, the telco/user interface, by agreement, would be at a point outside the GPR zone of influence; therefore, this point would not be the high-voltage protected interface. In this case, the entrance cables traversing the GPR zone of influence and the high-voltage protective interface equipment would be owned either by the power utility or be the end user. The telco/user interface could be a simple terminal or protector block outside the GPR zone of influence. These telecommunication circuits are of various types and have different performance objectives, as described in Clause 6.

The type, quality, and quantity of protective devices that would be used in any particular application should be dictated by the nature, magnitude, and frequency of occurrence of the interference, the nature of the service requirements, considerations of personnel and plant safety, and by the general protective policies employed by the organizations concerned.

The protective devices in service today range from very simple, low-cost, carbon-block protectors or gas tubes and small gauge wire fuse links to sophisticated schemes involving neutralizing transformers or reactors, isolating and drainage transformers, mutual drainage reactors, relays, filters, and the use of optical isolation systems.

Annex A provides further details, including operating characteristics, on various types of protective apparatus.

Copyright © 2001 IEEE. All rights reserved.

Copyright The Institute of Electrical and Electronics Engineers, Inc.
Provided by IHS under license with IEEE
No reproduction or networking permitted without license from IHS
Not for Resale

The operation of a protective device may result in a residual voltage between the telecommunication conductors and earth. The permissible magnitude of this residual voltage should be such that the requirements for personnel and plant safety are not jeopardized. In the case of circuits protected by neutralizing transformers or reactors, this residual voltage is termed the remanent or unneutralized voltage (see A.5).

The following paragraphs outline briefly the broad characteristics and application techniques of the various protective equipment in current general use.

a) *Carbon block protectors*
An assembly of two or three carbon blocks and an air gap designed to a specific breakdown voltage. These devices are normally connected to telecommunication circuits to provide overvoltage protection and a current path to ground during such overvoltage (see A.1).

b) *Gas-filled (gas tube) protectors*
A discharge gap between two or more electrodes hermetically sealed in a ceramic or glass envelope. These gaps provide protection against excessive voltage in the same manner as carbon block protectors (see A.2). The differences in operating characteristics of gas tube and carbon block protectors are discussed in B.1.

c) *Solid-state protectors*
These protectors employ solid-state circuit elements that provide a combination of high-speed voltage and current sensing. These protectors are a combination of voltage clamps (avalanche diodes) and crowbar devices (multilayer diodes similar to SCRs) and are designed to limit the voltage to a specific value and to reduce current flow to low values of milliamperes within nanoseconds. They are usually integrated into the terminal apparatus. Their characteristics are described in A.3, while comparisons with carbon blocks or gas tubes are described in B.2.

d) *Spark gaps*
Spark gaps consist of air dielectric between two electrodes that may be a combination of several basic shapes. These protectors are used to protect telecommunication circuits from damage due to voltage stress in excess of their dielectric capabilities (see A.1). They may or may not be adjustable

e) *Horn gaps*
An air gap metal electrode device, consisting of a straight vertical round electrode and an angular shaped round electrode. In the case of a telephone pair, there is one common grounded, center straight, vertical electrode and two angular electrodes, one for each side of the pair. The gaps are usually adjustable.

Horn gaps are used usually outdoors on open-wire lines exposed to high-voltage power transmission lines and in conjunction with isolating or drainage transformers. They are also used frequently alone out along the open-wire pair. Horn gaps provide protection both against lightning and power contacts (see A.1).

f) *Surge protective devices*
Devices that guard against dielectric failure of protection apparatus due to lightning or surge voltages in excess of their dielectric capabilities and serve to interrupt power follow current. Protection of isolating and neutralizing transformers by surge arresters is covered in Annex C.

g) *Isolating transformers*
Isolating (insulating) transformers provide longitudinal (common mode) isolation of the telecommunication facility. They can be designed for use in a combined isolating–drainage transformer configuration and also can be designed for a low longitudinal to metallic conversion (see A.4).

Copyright © 2001 IEEE. All rights reserved.
Copyright The Institute of Electrical and Electronics Engineers, Inc.
Provided by IHS under license with IEEE
No reproduction or networking permitted without license from IHS
Not for Resale

h) *Neutralizing transformers and reactors*
Devices that introduce a voltage into a circuit pair to oppose an unwanted voltage. These devices neutralize extraneous longitudinal voltages resulting from ground potential rise, longitudinal induction, or both, while simultaneously allowing ac and dc metallic signals to pass.

These transformers or reactors are used primarily to protect telecommunication or control circuits either at electric supply locations or along routes where exposure to power line induction is a problem, or both (see A.5).

i) *Drainage units or drainage reactors*
Center tapped inductive devices designed to relieve conductor-to-conductor and conductor-to-ground voltage stress by draining extraneous currents to ground. They are also designed to serve the purpose of a mutual drainage reactor forcing near simultaneous protector-gap operation (see A.6). These devices have a high conductor-to-conductor impedance to avoid loss of signal when protectors operate.

j) *High-voltage isolating relays*
Provides for the repeating of dc on/off signals while maintaining longitudinal isolation. High-voltage isolating relays may be used in conjunction with isolating transformers (see k) or may be used as stand-alone devices for dc tripping or dc telemetering (see A.7).

k) *Isolating transformers with high-voltage isolating relays*
This assembly provides protection for standard telephone service and consists basically of an isolating transformer and a high-voltage isolating relay. The transformer provides a path for voice and ringing frequencies while the relay provides a means for repeating dc signals around the transformer. A locally supplied battery or dc power supply is required for operation of the telephone and relay (see A.8).

l) *Optic coupling device*
An isolation device using an optical link to provide the longitudinal isolation. Circuit arrangements on each side of the optical link convert the electrical signal into an optical signal for transmission through the optical link and back to an electrical signal. Various circuit arrangements provide one-way or two-way transmission and permit transmission to the various combinations of voice and/or dc signaling used by the power industry. The optical link may be either a quartz rod or a short length of optic fiber. Single channel optic coupling devices may be used in conjunction with other isolation devices in protection systems as described in 8.4. A multichannel protection system utilizing a cabinet with mounting arrangements for a multiplicity of optic coupling devices is described in 8.8. For further information on fiber optic isolation systems see Annex F.

m) *High-voltage disconnect jacks*
Used to disconnect cable pairs for testing purposes. They help safeguard personnel from remote ground potentials (see A.10).

n) *Cable in the GPR zone of influence*
A high dielectric cable is one that provides high-voltage insulation between conductors, between conductors and shield, and between shield and earth (see 7.2, A.11, IEEE Std 367-1996, and IEEE Std 789-1988).

6. Service types, reliability, service performance objective (SPO) classifications, and transmission considerations

The term reliability means different things to different people. In its broadest sense, the term reliability is used with the term availability to measure system or equipment performance over a given period of time. Reliability and availability formulae and objectives are not addressed in this document.

Copyright © 2001 IEEE. All rights reserved.

Copyright The Institute of Electrical and Electronics Engineers, Inc.
Provided by IHS under license with IEEE
No reproduction or networking permitted without license from IHS
Not for Resale

In the context of power system protective relaying, reliability consists of a combination of dependability and security. This subject is dealt with briefly in 6.2 and 6.2.1.

Service performance objective classifications, as used in this guide, are a function of interruptions or outages due to the effects of power system faults (see 6.2 and 6.2.1).

Telecommunication services provided to electric supply locations are of different service types and have different SPO classes in accordance with the definitions given in this clause. The responsible power utility engineer should specify the service type and the desired SPO class for each telecommunication service provided at the electric supply location.

In addition to GPR and longitudinal induction considerations, service type, and SPO, the transmission characteristics of the channel should be considered when selecting the method of protection to be used.

6.1 Service types

For purposes of this recommended practice, wire-line telecommunication services to electric supply locations can be classified into four major types according to the following definitions and as summarized in Table 1 (see 8.9.2).

NOTE—Various other classifications may be used.

A) *Type 1*. Services requiring either dc transmission or ac and dc transmission used for
   a) Basic exchange telephone service or private line, or both, voice telephone service, etc.
   b) Teletypewriter, telemetering, supervisory control, etc.

B) *Type 2*. Private line services requiring ac or dc transmission, or both, used for pilot wire protective relaying, or dc tripping.

C) *Type 3*. Private line services requiring only ac transmission used for telemetering, supervisory control, data, etc.

D) *Type 4*. Private line services requiring only ac transmission used for audio tone protective relaying.

6.2 Service performance objective classifications

Interruptions or outages of wire-line telecommunication circuits serving electric supply locations may occur for physical reasons such as cable damage due to extraordinarily heavy storm loading, a vehicle striking and breaking a utility pole, or a direct lightning stroke. Circuit failures caused by such events cannot be prevented but may be minimized through careful application of the appropriate construction and maintenance practices.

Interruptions or outages due to the effects of power system faults can be minimized through the installation and maintenance of special protection systems that are designed to operate in the fault-produced electrical environment (GPR and longitudinal induction) at electric supply locations. Because of the critical need for service continuity during power system faults on certain types of telecommunication services provided to electric supply locations, a system of optional service performance objective classifications, for the purpose of this recommended practice, has been established for all types of telecommunication services provided to electric supply locations (see Table 1). These objectives, with respect to the effects of power system faults, fall into the

Copyright © 2001 IEEE. All rights reserved.
Copyright The Institute of Electrical and Electronics Engineers, Inc.
Provided by IHS under license with IEEE
No reproduction or networking permitted without license from IHS
Not for Resale

following three classifications:

A) *Class A*. Non-interruptible service performance (should function before, during, and after the power fault condition)

B) *Class B*. Self-restoring interruptible service performance (should function before and after the power fault condition)

C) *Class C*. Interruptible service performance (can tolerate a station visit to restore service)

6.2.1 Class A service performance objective considerations

SPO Class A is the most demanding type. Service performance for this class cannot tolerate even a momentary service interruption before, during, or after a power system fault. The non-tolerable service interruptions include both loss of dependability (failure to deliver a valid trip or control signal) and loss of security (delivery of a false trip or control signal). Examples of services that may have an SPO Class A are pilot-wire protective relaying, audio-tone protective relaying, and critical supervisory (remote control) circuits.

To provide additional reliability, dual alternate routing of two SPO Class A circuits should seriously be considered. This means that critical operating circuits are duplicated, end-to-end, over two geographically separated routes, minimizing the risk of simultaneous interruption of both circuits.

In addition to the special protection employed for achieving the SPO Class A, certain other special or nonstandard physical design and administrative procedures of the plant facilities should be followed. These include

a) The minimization of bridged taps and multiple appearances of these cable pairs.

b) The minimization of the number of appearances on central office main frames, with special protective covers required on all appearances.

c) These circuits should not be tested, switched, electrically contacted, or changed unless prior arrangements have been made with the appropriate group within the electric utility as to the date, time, and duration of such operations.

6.2.2 Class B service performance considerations

SPO Class B is less demanding than SPO Class A in that a service interruption can be tolerated for the duration of a power system fault, but service continuity should be restored immediately after the fault without requiring any repair personnel activity. Examples of services that are SPO Class B (with self-restoring requirements) are storm or emergency telephone circuits, telemetering and data circuits, supervisory control circuits, and signal and alarm circuits. The telecommunications engineer may determine that, for reasons of service performance, some or all of the special, nonstandard, physical design, and administrative procedures indicated in 6.2.1 described for SPO Class A are also necessary for SPO Class B.

6.2.3 Class C service performance considerations

SPO Class C is the least demanding in that an interruption or a service outage due to a power fault that requires a station visit to restore service can be tolerated. Examples of services that are SPO

Copyright © 2001 IEEE. All rights reserved.

Copyright The Institute of Electrical and Electronics Engineers, Inc.
Provided by IHS under license with IEEE
No reproduction or networking permitted without license from IHS
Not for Resale

Class C are basic exchange telephone service, non-critical telemetering and data circuits, and some types of signal and alarm circuits. The special nonstandard design and administrative procedures described for SPO Class A are not required to achieve SPO Class C.

6.3 Transmission considerations

The transmission characteristics of the channel should be considered in selecting the optimum protective arrangement to safeguard electric supply location telecommunication channels.

Depending upon the type of service, the transmission requirements will vary widely. For example, some services require a physical metallic pair, end-to-end. Certain channels should carry both ac and dc signals, while others are required to carry only ac signals. In the selection of protective hardware, transmission demands of the terminal equipment should be matched with the transmission capability of the channel. Transmission characteristics and SPO requirements for various types of telecommunication channels are shown in Annex D.

The following is a partial list of characteristics that should be specified by the user, if applicable, so that the transmission channel and associated protective equipment can be designed to meet the demands of the terminal equipment:

a) Type of termination (two-wire or four-wire)
b) Mode of operation (simplex, half-duplex, or full-duplex)
c) Function (remote trip, supervisory control, pilot wire, etc.)
d) Transmission (VF audio tone, dc on/off, dc pulses, etc.)
e) Attenuation requirements
f) Required frequency response
g) Steady-state noise requirements
h) Impulse noise requirements
i) Allowable harmonic distortion over frequency range of interest
j) Envelope delay distortion requirements
k) Shunt capacitance limitation between conductors of a single pair
l) Maximum loop resistance, including the neutralizing transformer (NT), if used
m) Allowable capacitive or resistive unbalance of the pairs, or both
n) Maximum differential mode voltage
o) Impedance of source and load
p) Need for metallic continuity in the channel

7. Protection theory and philosophy

Both the telecommunications protection engineer and the power system protection relaying engineer agree that the basic objectives for the protection of wire-line telecommunication facilities serving electric supply locations are to ensure personnel safety, to protect the telecommunications plant and terminal equipment, to maintain reliability of service, and to accomplish these in the most economic

Copyright © 2001 IEEE. All rights reserved.
Copyright The Institute of Electrical and Electronics Engineers, Inc.
Provided by IHS under license with IEEE
No reproduction or networking permitted without license from IHS
Not for Resale

way. In the design of a protection system to meet these objectives, however, the telecommunications protection engineer and the power protective relaying engineer may differ in their design approaches due to differences in their protection philosophies. The design of a protection system requires a blending of the philosophies of the engineers responsible for telecommunications protection and for protective relaying in order to effect a solution that meets the primary protection objectives of both.

The protection concepts and system designs described in this standard for leased telephone facilities have been agreed to by the power and telephone industry representatives who produced this standard. Where divergent views exist, they are covered by notes and dashed-lined boxes in the circuit diagram figures. In these cases, the telecommunications protection engineer and the power protective relaying engineer should reach a mutual agreement regarding the design to be implemented. The protection designs for leased telecommunications facilities to transmission line tower locations subject to GPR are generally specified by the telecommunications protection engineer.

7.1 Special wire-line protection design requirements

In order to design special protective systems for wire-line facilities serving electric supply locations, the following conditions should be known. However, no single condition should be used as the sole criterion for determining the need for special high-voltage protection.

a) The quantities, service types, and service performance objective classifications of all services at the electric supply location

b) The transmission requirements of the terminal equipment (ac signals only, dc signals only, ac plus dc signals, signaling frequencies, transmission capabilities of the transmission facility, e.g., noise squelch levels versus expected noise performance of the facility)

c) Factors such as the total available single phase-to-ground fault current and its distribution, maximum GPR (rms), X/R ratio, fault-produced longitudinal induction, lightning exposure

d) Electric supply location ground grid impedance to remote earth and the grid area

e) The extent of the GPR zone of influence

f) Whether the transmission parameters and service performance objectives are compatible with the available or proposed facilities

g) Anticipated future changes in any of the above data

h) Whether lightning protection is required

i) Any available past trouble report history for the electric supply location in question (see IEEE Std 367-1996)

If an isolation-type protection system is to be used, drainage current capability for the isolating transformers and drainage reactors should be considered.

If a neutralization-type protection system is to be considered, the following additional information should be known:

a) The required volt-second or per unit flux capability of the neutralizing transformer or reactor based on the expected GPR (including any assumed dc offset) and maximum permitted remanent voltage (see A.5)

b) Wire gauge and number of pairs, based on present and future requirements

Copyright © 2001 IEEE. All rights reserved.

Copyright The Institute of Electrical and Electronics Engineers, Inc.
Provided by IHS under license with IEEE
No reproduction or networking permitted without license from IHS
Not for Resale

c) Maximum resistance of the primary circuit conductors and remote ground resistance

d) The design method to be used for design specification purposes: worst case design, the number of good cycles approach, custom design, or standardized design

e) Mechanical constraints: size, weight, type of impregnation, terminals or stub cables, etc.

f) Electrical constraints: presence of additional protective devices, such as carbon blocks, drainage reactors, limitations of cable and terminal dielectric strength, and remote grounding

7.2 Dedicated cable

A common feature of Voltage Level II and III circuit configurations, discussed in 8.1.3 and 8.1.4, is the use of a high dielectric withstand, dedicated cable containing only those pairs serving the electric supply location. Depending upon local agreement or authoritative regulations, the dedicated cable may be owned by either the telecommunication provider or the end user. Pairs to all other subscribers are excluded, minimizing pair-to-pair stress during a fault. A dedicated cable, if provided by a telephone company, may extend the entire distance from the electric supply location high-voltage interface location to a telecommunication center; however, it should extend at least to a point where the GPR profile has decreased to an agreed value. This point should be located so as to protect the general-use cable plant and, in the case of remote drainage, to minimize protector block operation and the resulting generation of noise, which could interrupt or interfere with critical services. See 10.3 for safety concerns related to installation and maintenance of this item.

If a remote drainage location is not used, the dedicated cable need extend only to a point on the GPR profile that is compatible with the assured dielectric of the installed, general-use cable. The reliability of the wire-line telecommunications facility is dependent, in part, upon the high-voltage integrity of the dedicated cable. Refer to IEEE Std 789-1988 for typical specifications for telecommunication cable serving electric supply locations.

Special considerations should be observed when grounding the dedicated cable. Cable pairs and shield between the high-voltage interface location and the edge of the zone of influence should not contact the ground structure at the electric supply location. The cable should be routed through a well-drained insulating conduit in the station grid area, reducing the possibility of solid or incidental contact with the station grid. If arresters are not used, the shield should be clipped and rendered inaccessible to prevent workers from erroneously connecting the shield to ground at the electric supply location.

Low-impedance grounding of the dedicated cable shield within the GPR zone of influence is likewise not permitted. Incidental, high-impedance grounding, however, can be tolerated. An incidental ground results from a small puncture or pinhole in the outer covering of the cable. Incidental grounds are assumed to have, and continue to have, sufficiently high contact impedance to limit shield current and internal cable stress.

The dedicated cable facilities are shown in Figure 10, Figure 11, Figure 12, Figure 13, Figure 14, Figure 15, and Figure 16. The user/telco interface is defined as a point at which the user and telco facilities meet, and to which both user and telco personnel have access. Its location is determined by local agreements or authoritative regulations. It should be noted that this point may or may not be at the same location as the high-voltage protective apparatus location referred to as the high-voltage interface (HVI).

High voltages due to GPR and induction can appear between cables, protection hardware, and the local ground at various points of an installation. It is essential that personnel accessing the installation understand the potential dangers and observe the safety practices discussed in Clause 10.

Copyright © 2001 IEEE. All rights reserved.
Copyright The Institute of Electrical and Electronics Engineers, Inc.
Provided by IHS under license with IEEE
No reproduction or networking permitted without license from IHS
Not for Resale

7.3 Resistive balance

Longitudinal current may result from an insulation breakdown of cable pairs or shield during the fault or if induced voltages are sufficient to operate the drainage mechanism provided on the pairs. This current will produce metallic voltages if the resistance of the tip and ring conductors or the drainage devices is not balanced. This longitudinal-to-metallic (L/M) conversion can produce sufficient metallic noise levels to disrupt sensitive critical services. The effect of L/M conversion should be minimized by checking the resistance balance of pairs for electric supply location use and assigning critical services to the pairs with the best resistive balance. Effects of capacitance unbalance are relatively negligible when direct drainage longitudinal currents flow.

When determining resistive balance, the entire pair length between the electric supply location and the telecommunication center should be considered. Where the dedicated cable extends only a short distance from the electric supply location and joins with the general-use plant, the general-use telephone cable may form an appreciable section of the cable run and will have the greatest contribution to resistive unbalance. If this cable is exposed to induction, strategically placed drainage along the cable route may be used to maintain the voltage within acceptable limits; however, drainage current will be converted to metallic noise on poorly balanced pairs. Presently, resistive balance is considered acceptable when the difference in resistance between tip and ring conductors does not exceed 1%.

7.4 Concepts and concerns

A fundamental concept regarding the protection of wire-line telecommunication facilities serving electric supply locations is that of a coordinated protection system design. This refers to a system of protection in which special protection measures are applied to SPO Class C services, as well as to SPO Class A and Class B services, that are provided in the same cable so that a circuit interruption or outage on an interruptible service will not cause a circuit failure or interruption on a non-interruptible service. The protection devices used on the various services should, therefore, be coordinated with each other with respect to the environment and the service performance objectives of the services on which they are employed. The object of the coordination is to minimize the likelihood of cable failure, protector operation, failure of special protection devices, failure of terminal equipment, or other similar occurrences that could create hazards to personnel and plant and result in interruptions or outages of critical and non-critical services alike. The various special protection systems described in Clause 8 of this standard are examples of coordinated systems of protection.

In situations in which the only telecommunication services at a electric supply location are of an interruptible type (SPO Class C) and in which the electrical environment is judged to be hazardous to personnel or equipment, responsible protection philosophy requires that special protection measures be taken. This situation is of concern because of the need to provide special protection for personnel and plant safety when uninterrupted service performance is not a requirement. Instead, only ordinary station protection is sometimes installed and this results in an inadequate or potentially unsafe condition.

NOTE—Personnel responsible for protection of these facilities are cautioned not to overlook this situation.

7.5 General-use telecommunication cable in the electric supply location GPR zone of influence

When the general-use telecommunications cable to which the dedicated cable is connected passes through an area subject to GPR, dielectric breakdown in that cable may compromise the reliability of

Copyright © 2001 IEEE. All rights reserved.

Copyright The Institute of Electrical and Electronics Engineers, Inc.
Provided by IHS under license with IEEE
No reproduction or networking permitted without license from IHS Not for Resale

the electric supply location circuits. Additional protection may be required on the general use cable to avoid such degradation. The case of a general-use cable passing through the zone of influence beyond the junction with the dedicated cable is discussed in A.11. Routing the electric supply location circuits through another electric supply location zone of influence between the remote drainage point and the central office is undesirable and should be avoided. If it cannot be avoided, then the reliability of service on cables that pass through the zone of influence of another electric supply location should be evaluated.

Telephone-type cables suitable for this type of installation are covered in IEEE Std 789-1988.

8. Protection configurations

The application of protective devices such as carbon blocks, gas tubes, isolating and drainage transformers, neutralizing transformers or reactors, optical coupling isolators, etc., involves both the physical and electrical planning of the protection installation to ensure both personnel safety and operating reliability. The configuration may range from no protection to a simple carbon block or gas tube protection plan to a complex configuration. This clause provides recommended practices on the use of the various protection schemes and the reasons for their selection.

8.1 Ground potential rise plus induced voltage levels

8.1.1 Voltage level quantification

Voltage protection levels in this document are given in terms of peak values because communication cable dielectric, bare spots on wires, and air gaps essentially break down close to the peak of the voltage waveform and because some degree of a dc offset may be superimposed on the sinusoidal wave form. As a result of the nonsymmetrical wave shape, the relationship between the rms and peak values is not usually $\sqrt{2}$ (see Figure 2). The user may specify values in terms of rms if the user wishes to choose his or her own offset factor for the first half cycle of the wave shape.

For purposes of this protection standard, protection options are given for three voltage levels: I, II, and III.

8.1.2 Voltage Level I

For Voltage Level I, an electric supply location is considered to have minimal GPR, minimal induction, and minimal zone of influence; therefore, no special high-voltage protection, such as isolation or neutralization, is required. Even in Voltage Level I, however, special protection arrangements on highly critical services may be used and may differ from those on less critical services. Descriptions of figures and options are covered later in the protection table and protection schematic chart.

Voltage Level I is the voltage level at which virtually no pair-to-pair or pair-to-shield dielectric failure would occur in cables serving the electric supply location that had not been specifically installed and tested as a dedicated high dielectric cable. If service should be continuous during the fault (SPO Class A) or restored immediately after the fault (SPO Class B), then consideration of the dielectric withstand capabilities of the elements of the plant is important. Experience has shown that the general-use telephone cable may fail in the pair-to-pair and pair-to-shield modes at the splices at voltages that exceed 300 V peak. Similarly, some 3 mil carbon blocks may fire as low as 300 V peak. When determining the peak value of the voltage in meeting this criteria, adding an appropriate value of dc offset of the transient and the longitudinally induced voltage (expressed by V peak) to the steady-state GPR (expressed in V peak) is necessary (see Clause 4).

Copyright © 2001 IEEE. All rights reserved.
Copyright The Institute of Electrical and Electronics Engineers, Inc.
Provided by IHS under license with IEEE
No reproduction or networking permitted without license from IHS
Not for Resale

NOTE—Many administrations have chosen a value of 300 V, either rms or peak, as the upper limit for Voltage Level I. Other administrations have chosen values such as 420, 430, or 650 V rms or peak. Some administrations have chosen even higher voltages on the basis of their higher cable and equipment dielectric withstand capabilities.

The design configurations contained in Table 1 and Figure 19 shall be amended by the user to accommodate the higher voltages.

8.1.3 Voltage Level II

The upper limit for Voltage Level II is 1000 V peak. It is based on experience and is considered to provide a suitable safety margin below voltage and current levels that would cause telephone-type protectors to fuse, explode, or cause fire hazards. In Voltage Level II, special protective devices are not required on electric supply location services, provided that momentary interruption of service can be tolerated during a power system fault. If certain services require isolation or neutralization for reliability reasons, however, then all other services should be isolated or neutralized, or the dielectric capability of the dedicated cable should be coordinated to withstand the conductor-to-conductor voltage stresses that can occur.

A dedicated, high dielectric cable should be used for Voltage Level II, unless the only service involved in that cable is a service that can be interrupted and not automatically restored after a fault (SPO Class C), in which case the voltage can be allowed to rise to 1000 V peak or higher before special protective measures should be used. The Voltage Level II upper limit is the point at which experience has shown that

a) Protectors may operate and recover after a fault to restore the circuit to normal.

b) The current through the conductors will not cause damage to the conductors or the insulation.

An upper limit of 1500 V peak is suggested if remote protection is used at the junction of the dedicated and general-use cables. An upper limit of 1000 V peak is suggested if the remote protection is not used. For specific stations, some administrations establish an upper limit for Voltage Level II based upon the time–current characteristics of the protectors and the electric supply location parameters.

In the case of leased or rented telecommunication facilities, the choice of the magnitude of the voltage should be by agreement between the local power utility or end user and its serving telephone company. Power utilities regularly use rms values as the basis for their own facilities and calculations.

8.1.4 Voltage Level III

Voltage Level III begins at the upper limits of Voltage Level II and requires special high-voltage protection such as isolation or neutralization, or both, for the protection of plant, personnel, and circuit integrity for all types of services and SPO classes.

8.2 Basic protection system

Depending upon the service performance objective requirements and the GPR plus induced voltage level (see 8.9) requirements, basic wire-line communication protection, as shown in Figure 9 and Figure 10, may be used. The basic protection illustrated in Figure 9 may be used on all electric supply location services, provided that the interfering voltage is calculated not to exceed the Voltage Level I range, as discussed previously. Administrations, power utilities or telephone companies, and end users who so choose, will permit this limit to be higher. Above the chosen voltage, basic protection, as illustrated in Figure 10, may be used on certain services in the Voltage Level II range (see 8.9).

Copyright © 2001 IEEE. All rights reserved.

Copyright The Institute of Electrical and Electronics Engineers, Inc.
Provided by IHS under license with IEEE
No reproduction or networking permitted without license from IHS
Not for Resale

Non-interruptible service requires special protection, i.e., neutralization or isolation in both Voltage Level II and III ranges.

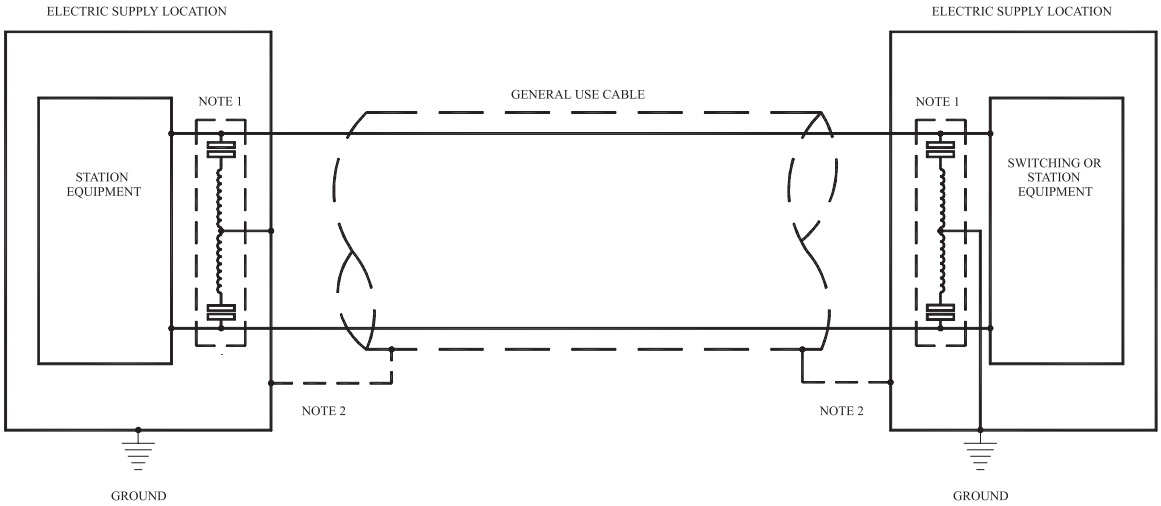

Figure 9—Basic protection for Voltage Level I all service classifications

NOTES:
1—See Table 1 and Figure 19 for applicable options.
2—Some telephone administrations may require that shields of all general use cables be grounded at electric supply locations. Current carrying capacity of the shield under power system fault conditions should be considered.

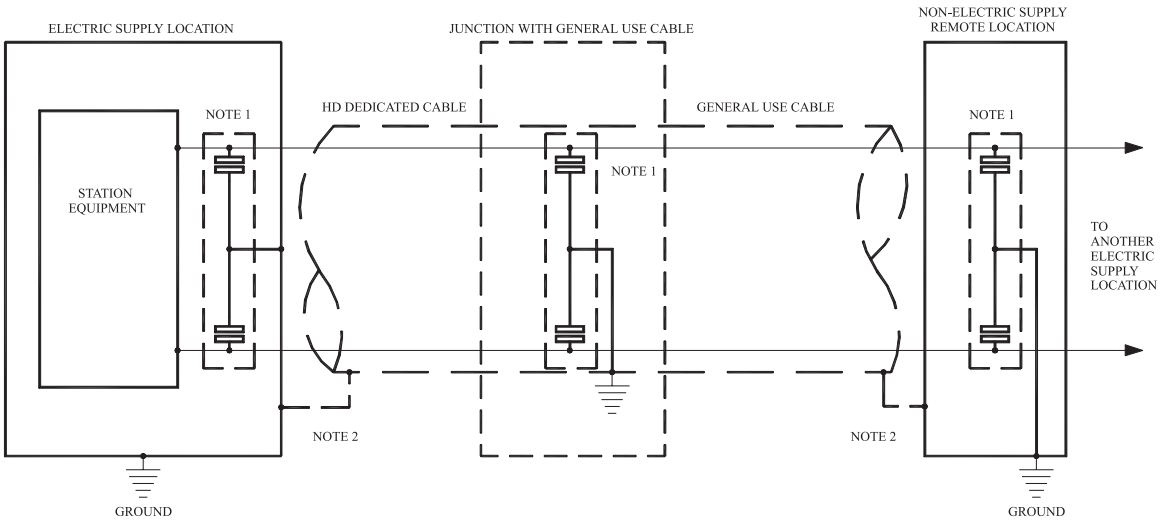

Figure 10—Basic protection for Voltage Level II range Class B or Class C services only

NOTES:
1—See Table 1 and Figure 19 for applicable options.
2—Although this standard recommends that the dedicated cable shield be isolated from the electric supply location ground grid, some administrations may require that shields of all dedicated cables be grounded at electric supply locations. Current carrying capacity of the shield under power system fault conditions should be considered.

Copyright © 2001 IEEE. All rights reserved.
Copyright The Institute of Electrical and Electronics Engineers, Inc.
Provided by IHS under license with IEEE
No reproduction or networking permitted without license from IHS
Not for Resale

8.3 Protection configurations employing isolation devices

Circuit configurations range from the simple, consisting basically of the isolation device at the electric supply location and dedicated cable to a remote location, to the more elaborate, when distance to the remote location or distance between the isolation device and terminal equipment at the electric supply location is increased. A remote location is defined as another electric supply location or dispatch office, telephone central office, or other remote communications terminal. Figure 11 illustrates the simplest situation. Figure 12 and Figure 13 illustrate the more elaborate situations in which extended distance between the electric supply location and the remote location may make routing of dedicated cable for the entire distance impracticable. The dedicated and general-use cable plant are normally interconnected, and remote drainage protection may be required at the junction point. The decision to use remote drainage protection should be by mutual agreement between the administrations involved. When the cable length between the isolation device and terminal equipment at the electric supply location becomes significant, protection is further complicated by the shielding required for the interconnecting cable. Where the remote location is another electric supply location, a high-voltage interface may also be provided at the remote location (see Figure 13).

8.3.1 Basic isolation protection configuration

A very simple and effective protection system can be realized with high-dielectric isolation transformers, relays or optical coupling isolators, high-voltage disconnect jacks, surge arresters, and high-dielectric dedicated cable. In all cases, the dielectric of these devices shall coordinate with GPR and the dielectric rating of the dedicated cable (see Figure 11).

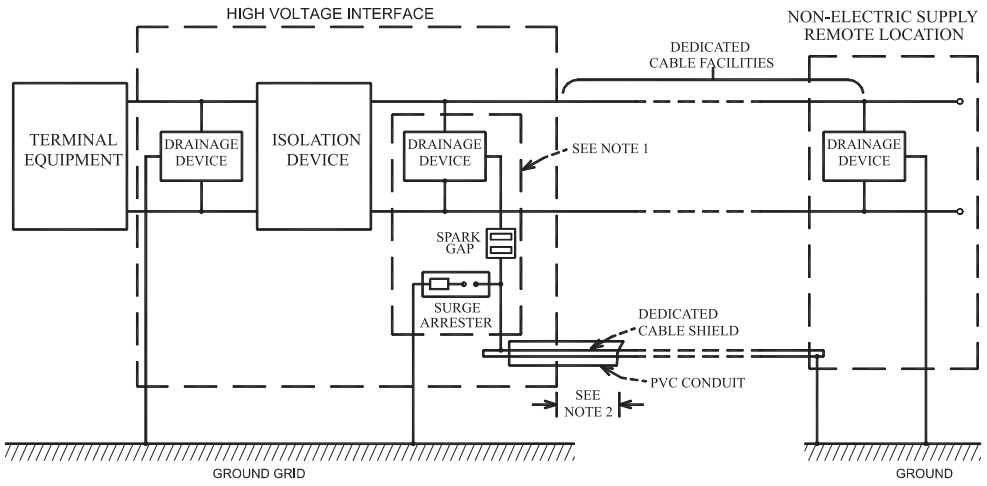

Figure 11—Basic isolation protection configuration

NOTES:
1—Use of drainage device, spark gap, and surge arrester to be by mutual agreement between protective relay and communications engineer.
2—PVC conduit, 3 m minimum from grid or fence, whichever is further out.

8.3.2 Protection at the electric supply location

Protection at the interface between the electric supply location and the incoming communications cable (i.e., the isolation or neutralization device) is intended to keep the ground potential rise from

Copyright © 2001 IEEE. All rights reserved.

Copyright The Institute of Electrical and Electronics Engineers, Inc.
Provided by IHS under license with IEEE
No reproduction or networking permitted without license from IHS
Not for Resale

appearing on the incoming cable. The electric supply location communications cable interface will, therefore, be referred to as the high-voltage interface (HVI). This point is not necessarily the telco/user interface.

The HVI could be located at either the edge of the station ground grid or the control building. Wiring between the HVI and terminal equipment should be short to minimize exposure to inductive interference, switching transients, or differential ground grid voltages; or measures as shown in Figure 12 and Figure 13 should be taken to protect against such interference. Drainage to the electric supply location ground is provided on the station side of the isolation device.

For a totally ac class of service, direct drainage may be applied. When ac and dc signals will both be present on the pair, a drainage reactor with a gap protector in each leg, termed a mutual drainage reactor, should be used because the drainage reactor presents a low bridging impedance to dc signals. Blocking capacitors could be used in place of the gap protectors; however, resonant conditions should be considered.

Drainage provided on pairs assigned to Class C service performance (see 6.2.3) may consist only of carbon protector blocks, gas tubes, or solid-state protectors. Pairs assigned to Class A service performance (see 6.2.1) should be equipped with a mutual drainage arrangement to minimize noise interference and prevent signal loss.

The isolation device may also be an isolation transformer with a well balanced center tap serving the dual function of isolation and drainage. The center tap on the electric supply location side may be connected to the ground grid to provide direct drainage, as shown in Figure 14, as long as a ground loop is not created. The center tap of the line or central office (CO) side winding should have a specified minimum drainage capability.

If the dielectric of the isolation devices and cable may be exceeded, cable protection can be provided on the remote location side of the isolation device to the dedicated cable shield through a spark gap intended to limit pair-to-shield stress. This cable protection will not be effective for longitudinally induced voltages, as both the pair and shield are in the same field. When isolation devices other than well-balanced, center-tapped isolation and drainage transformers are used, separate drainage coils with direct, capacitor-blocked, or protector drainage connections should be provided for Class A services and may be provided for Class B services. Class C services utilize only carbon protector blocks or equivalents. The spark gap does not normally operate except as a safety measure to prevent cable damage in the event that an isolation device fails or the dedicated cable shield contacts the station ground.

The surge arrester shown in Figure 14 protects the isolation device in the event of a lightning stroke to the electric supply location ground structure or communications facility that exceeds the isolation device's basic impulse insulation level BIL. The arrester may be eliminated if the dielectric BIL of the isolation device is capable of withstanding the voltage from a lightning stroke.

The dedicated cable should be routed in a well drained insulating conduit, e.g., polyvinylchloride (PVC), within the station ground grid area.

8.3.3 Protection at the central office or non-electric supply location remote location

The basic configuration of Figure 11 shows the dedicated cable extending the entire distance to the remote location where the shield is grounded. Drainage is applied to all pairs at the point of entry to the remote location to ensure that voltages from communication line-to-ground are within prescribed safety limits. On Class A services, direct, capacitor-blocked, or protector-blocked drainage reactors are used, depending upon whether or not dc is present. On Class B services, the use of a mutual

Copyright © 2001 IEEE. All rights reserved.
Copyright The Institute of Electrical and Electronics Engineers, Inc.
Provided by IHS under license with IEEE
No reproduction or networking permitted without license from IHS
Not for Resale

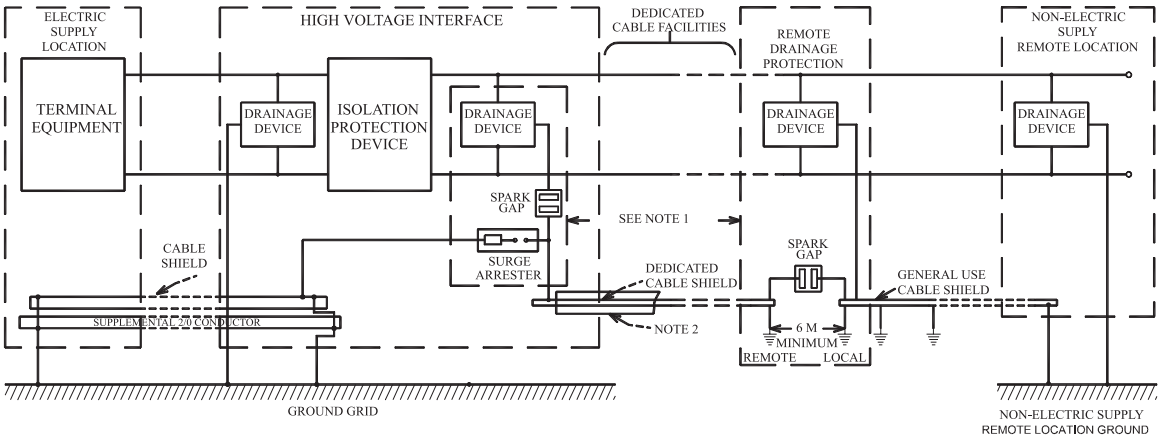

Figure 12—General isolation protection configuration

NOTES:
1—Use of drainage device, spark gap, and surge arrester to be by mutual agreement between protective relay and communications engineer.
2—PVC conduit, 3 m minimum from grid or fence, whichever is further out.

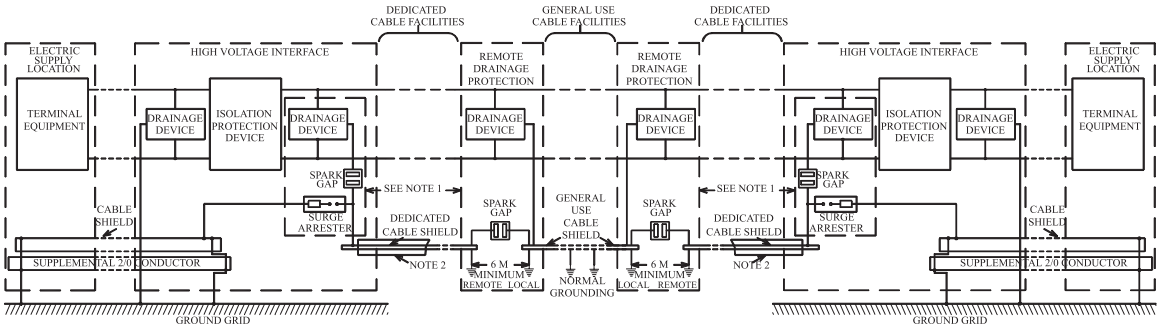

Figure 13—General isolation protection between two electric supply locations

NOTES:
1—Use of drainage device, spark gap, and surge arrester to be by mutual agreement between protective relay and communications engineer.
2—PVC conduit, 3 m minimum from grid or fence, whichever is further out.

drainage reactor is optional. Carbon protector blocks, gas tubes, or solid-state protectors are used for Class C services such as exchange telephone service. If drainage is required along the cable route (outside the GPR zone) to mitigate the effects of longitudinal induction, it should be applied to all cable pairs to preclude possible arcing between in-service and unassigned or unused pairs.

8.4 General isolation protection configuration

See Figure 12 and Figure 13.

8.4.1 Dedicated cable

In many situations, using dedicated cable facilities for the entire distance from the electric supply location to the remote location may not be feasible or economically practical. Dedicated cable facilities

Copyright © 2001 IEEE. All rights reserved.

Copyright The Institute of Electrical and Electronics Engineers, Inc.
Provided by IHS under license with IEEE
No reproduction or networking permitted without license from IHS
Not for Resale

may be merged with a general-use telephone plant at a location outside the zone of influence of the station GPR. As an alternative, the dedicated cable could be merged with general-use cable at a point where the station GPR coordinates with the dielectric strength of the general-use cable. Protection at the electric supply location and at the remote location is identical to that provided in the basic configuration of Figure 11.

8.4.2 Remote drainage

Remote drainage protection may be added at the point at which the high dielectric dedicated cable facilities and the low dielectric general-use plant merge, as shown in Figure 12 and Figure 13. This ensures that voltages are maintained within the capabilities of the low dielectric cable in the event of failure of the isolation devices or the dedicated cable insulation. For types of drainage units see A.6.

A suitable location for remote drainage protection may be determined by using the information given in Clause 4. The site should be chosen to ensure that local ground potential rise does not exceed Voltage Level I. If a higher GPR point were chosen, the dielectric strength of the general-use cable jacket might be exceeded and personnel safety might be jeopardized. In addition, circuit noise could be produced due to an unbalance of the drainage system.

If parallel routing of power and communication cables exists, then remote drainage protection should be located at the point at which the combination of longitudinally induced voltage (on the remote side of the point) and GPR does not exceed Voltage Level I. Consideration should also be given to local GPR due to ties or couplings with local power line grounds.

Two grounds are established at the remote drainage protection location as shown in Figure 12 and Figure 13: a local ground associated with the general-use cable and drainage, and a remote ground associated with the dedicated cable shield. This practice recommends that these grounds be established a minimum of 6 meters apart.z

Additional lightning protection is provided by the spark gap connected between dedicated and general-use cable shields. When there is assurance that the isolation devices at the high-voltage interface have been properly engineered and installed, the ground electrode on the dedicated cable and general-use cable are bonded at the splice.

8.4.3 Local terminal

When the high-voltage interface is located sufficiently far from the terminal equipment to expose the interconnecting cable to inductive interference, the cable between the two locations should be placed in steel conduit along with a 2/0 AWG bare copper conductor. The cable shield, steel conduit, and the 2/0 AWG conductor should be bonded together and then bonded to the electric supply location ground at the location where the cable enters the conduit and leaves the conduit.

The circuit balance should be maintained by using balanced, twisted-pair conductors within this cable and in any wiring extending to the terminating equipment. Interconnecting cable length is not critical, provided that proper shielding has been applied.

8.4.4 Composite protection system

Figure 14 shows a protection system utilizing various types of isolation devices at the high-voltage interface using the general protection configuration of Figure 12. Direct drainage, protector drainage, or carbon blocks are provided at the various protection locations, depending upon the type of service provided, over the wire pair. Figure 14 shows how the various drainage techniques are used with the different isolating protection devices.

Copyright © 2001 IEEE. All rights reserved.
Copyright The Institute of Electrical and Electronics Engineers, Inc.
Provided by IHS under license with IEEE
No reproduction or networking permitted without license from IHS
Not for Resale

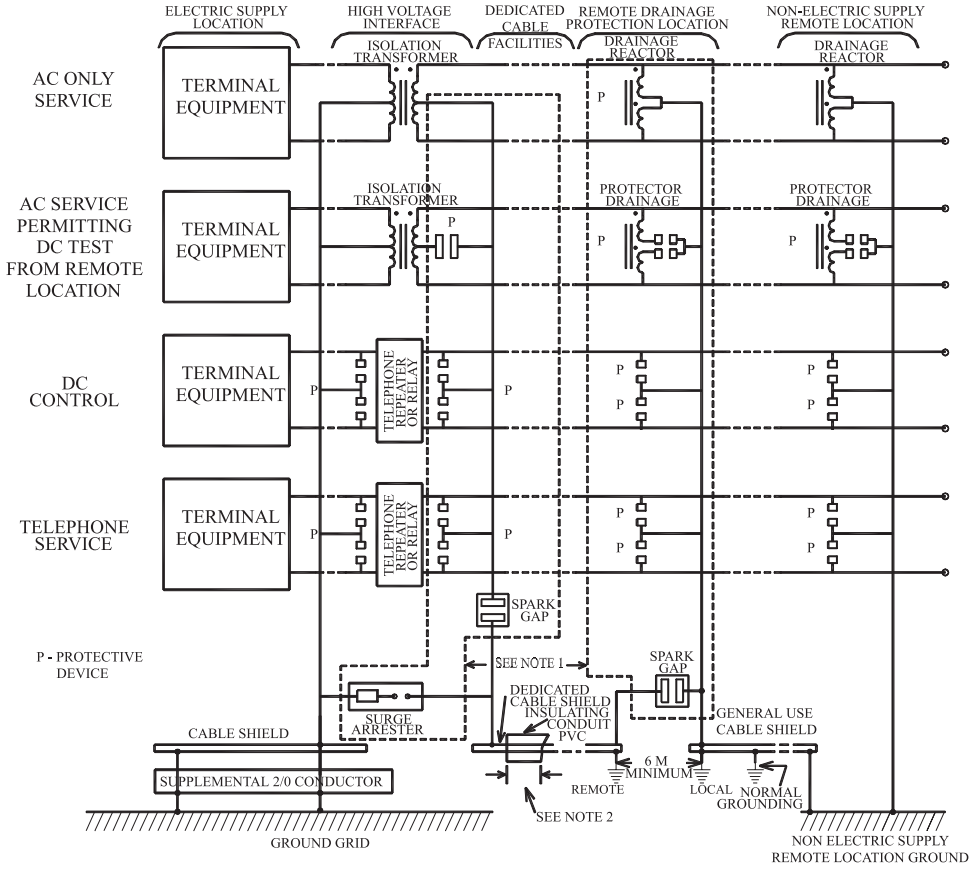

Figure 14—Composite protection system

NOTES:
1—Use of drainage device, spark gap, and surge arrester to be by mutual agreement between protective relay and communications engineer.
2—PVC Conduit, 3 m minimum from grid or fence, whichever is further out.

8.5 Protection configurations employing neutralizing transformers

Figure 15 is a schematic showing the three-winding-type neutralizing transformer and additional protection for an installation using cable pairs to form the exciting or primary circuit.

A surge arrester is shown connected across the transformer primary or exciting winding to protect the transformer against high surge voltages produced by lightning strokes to nearby station shield structures or microwave towers. In small stations, lightning strokes terminating anywhere in the station may produce high surge voltages across the transformer primary. When properly rated, the surge arrester provides surge protection as well as a design value for coordinating the transformer insulation level.

If a gap type arrester is chosen that has a rating much higher than the expected GPR, it will have a higher impulse sparkover, and the transformer impulse strength will have to be increased accordingly. The impulse protective levels of the arrester should be compared with the full-wave-withstand insulation strength of the transformer and impulse withstand strength for any shorter durations given by the manufacturer to determine the protective ratio. The arrester protective level should be a maximum of 80% of the insulation withstand strength of the neutralizing transformer.

Copyright © 2001 IEEE. All rights reserved.

Copyright The Institute of Electrical and Electronics Engineers, Inc.
Provided by IHS under license with IEEE
No reproduction or networking permitted without license from IHS
Not for Resale

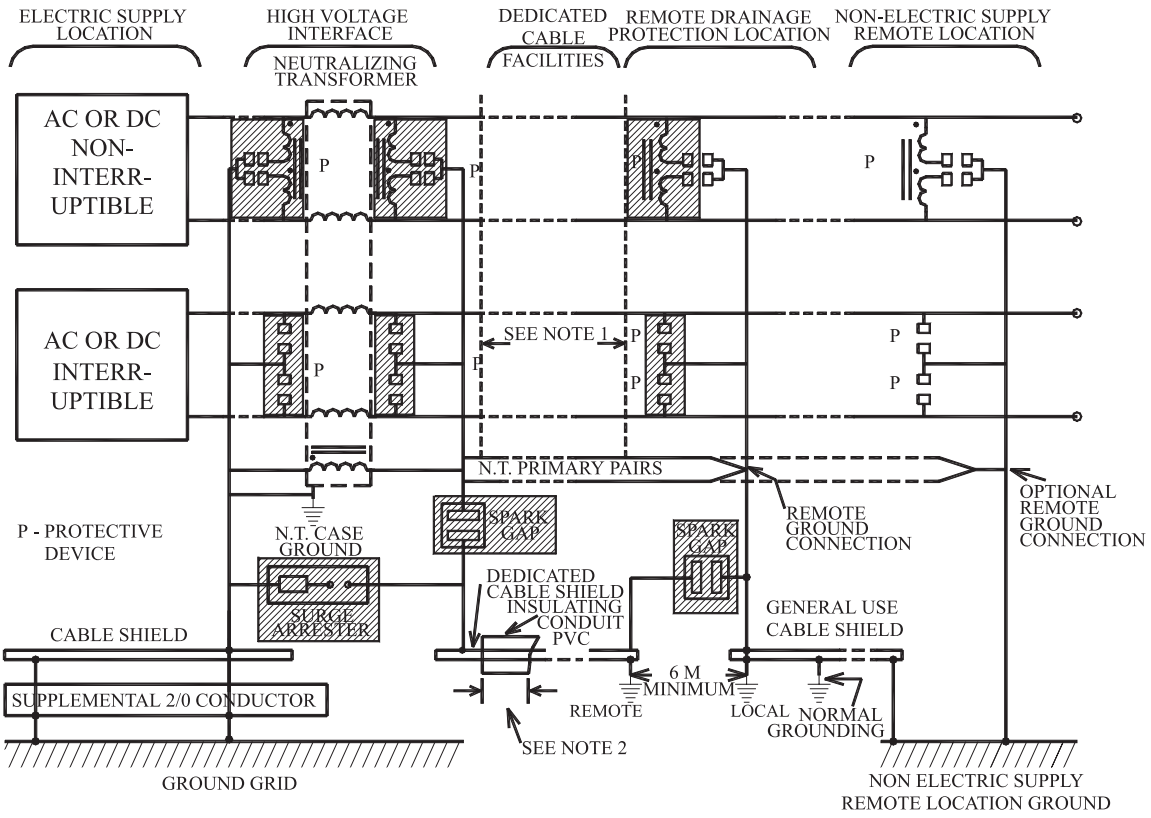

Figure 15—Neutralizing transformer installation protection

NOTES:
1—Use of drainage device, spark gap, and surge arrester to be by mutual agreement between protective relay and communications engineer.
2—PVC conduit, 3 m minimum from grid or fence, whichever is further out.

The impulse protective levels of the arrester are given numerically by the maximum of

a) Front-of-wave impulse sparkover voltage for gap-type arresters.

b) $1.2 \times 50\,\mu s$ sparkover voltage (full wave) for gap-type arresters.

c) Residual (discharge) voltage at a given discharge current. (For a well-shielded station, the discharge currents are considered to be low in magnitude for both metal oxide and gap-type arresters.)

For practical purposes, the full wave impulse sparkover voltage for gap-type arresters only is usually the controlling factor. A spark gap may be located between the cable core and shield on the remote side of the transformer. This gap should be coordinated with the core-to-shield dielectric of the cable and will operate to prevent cable breakdown. A second spark gap may be used between the dedicated cable shield and the general-use cable shield at the remote drainage protection location. This gap should be coordinated with the core-to-shield dielectric of the dedicated cable. Protector drainage may be used on Class A and Class B services to ensure symmetrical gap operation. In the case of ac services, it maintains a high bridging impedance while providing a low longitudinal impedance for drainage. Unassigned and unused dedicated cable pairs should be connected in parallel to one transformer secondary winding at the high-voltage interface and to ground at the remote drainage point to avoid possible pair-to-pair breakdown.

Copyright © 2001 IEEE. All rights reserved.
Copyright The Institute of Electrical and Electronics Engineers, Inc.
Provided by IHS under license with IEEE
No reproduction or networking permitted without license from IHS
Not for Resale

The shaded areas of Figure 15 show optional protection arrangements. The surge arrester and block protection are shown as separate options. In the general case, the arrester discharge currents should be limited, obviating the need for additional block protection. This additional protection would be needed for long lengths of external cable, high magnitude strokes with high rates of rise to the electric supply location shield system in the vicinity of the transformer, high ground resistivity, and relatively few ground conductor paths. At the high-voltage interface, secondary protection, if required for personnel safety, is shown on the electric supply location side of the neutralizing transformer (NT). With the use of a shielded cable, steel conduit, a ground conductor such as 2/0 AWG, and the relatively short distances involved, this protection may be located alternatively at the electric supply location building.

The introduction in recent years of the gapless metal oxide types of surge arresters has somewhat changed the impulse voltage withstand requirements for neutralizing transformers as well as for isolating and drainage transformers. Since there is no actual gap in this type of arrester, the selection of its appropriate voltage rating to coordinate with the dielectric withstand capabilities of transformers is based upon a different set of principles. This type of arrester offers superior protective characteristics over the older gap arresters while at the same time permitting a reduction in the required impulse voltage withstand characteristics of the transformers.

For a more detailed discussion of these characteristics and the dielectric coordination withstand requirements, see [B13], [B23], and [B26].

8.6 Protection configuration employing neutralizing in parallel with isolation on separate pairs

Sometimes it is desirable to use both neutralizing and isolating transformers, in parallel, to protect services in the same cable. Such a protection scheme can be designed to adequately protect service and facilities during faults on the power system. Care should be exercised, however, in the protection design to avoid excessive neutralizing transformer remanent voltage. If this occurs, protector block operation may occur and undesirable or possibly damaging voltage stresses may result between neutralized and isolated conductors.

The neutralizing transformer shown in Figure 16 is a multipair type protecting two types of services. One service type uses protector drainage at the station high-voltage interface, at the remote drainage protection location, and at the non-electric supply location remote location. This protection is designed to provide continuity of the ac portion of the service in the event that flashing of protector blocks occurs. Services that might utilize this type of channel are ac pilot wire with dc supervision or dc transfer trip relaying. The remaining neutralized pair is protected by carbon protector blocks at the four protection locations. Class C and some Class B services may utilize this type of channel.

Two optional spark gaps are shown at the high-voltage interface location. The shield gap provides a controlled breakdown path to prevent cable damage if voltage stress between the neutralizing transformer primary and secondary pairs and the shield becomes excessive. The service spark gap provides a controlled breakdown path if voltage stress between isolated and neutralized pairs becomes excessive. Remote drainage protection, drainage, protector blocks, spark gaps, and a surge arrester at the high-voltage interface location are shown as optional in Figure 16 (shaded areas), but are often considered by the telephone industry as even more important in this application than in the all-isolation case. These guard against plant damage to leased telephone facilities and interference with critical services in the event of excessive NT remanent voltage and lightning surges. In certain situations, the remote drainage location and the non-electric supply location remote location may be one and the same point.

--`,,`,,`-`-`,,`,,`,`,,`---

Copyright © 2001 IEEE. All rights reserved.

Copyright The Institute of Electrical and Electronics Engineers, Inc.
Provided by IHS under license with IEEE
No reproduction or networking permitted without license from IHS
Not for Resale

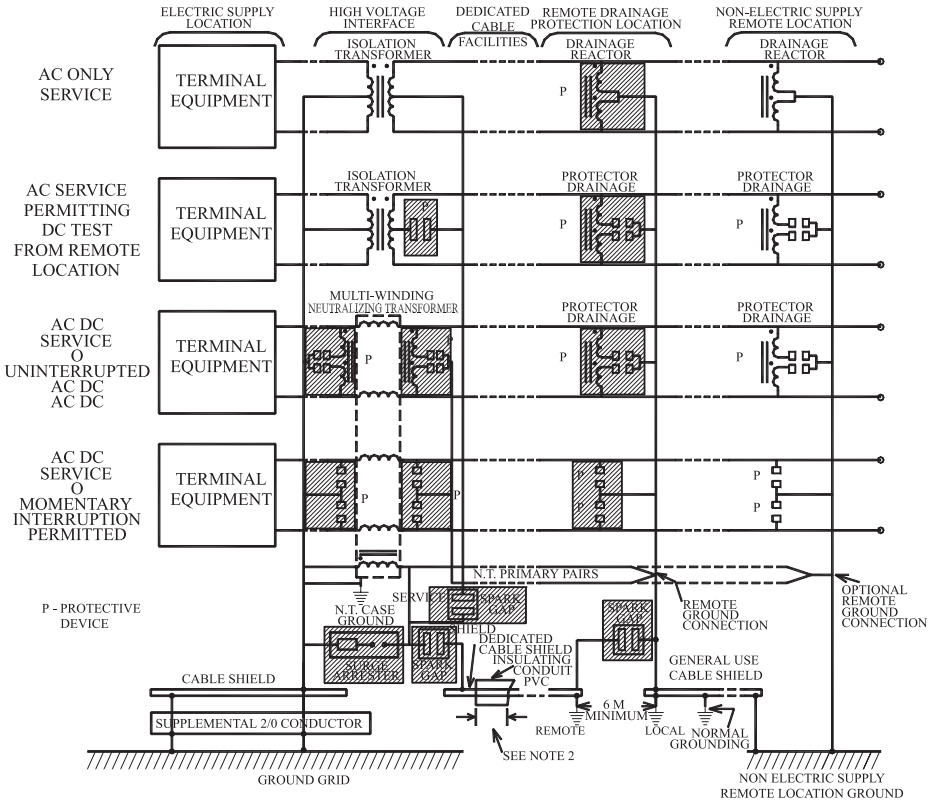

Figure 16—Typical isolated and neutralized services in parallel on separate pairs

NOTES:
1—Use of drainage device, spark gap, and surge arrester to be by mutual agreement between protective relay and communications engineer.
2—PVC conduit, 3 m minimum from grid or fence, whichever is further out.

8.7 Protection configuration employing neutralizing in tandem with isolation

The use of the three-winding neutralizing transformer with a tandem isolating transformer is a similar concept to the tandem operation of the two-winding neutralizing transformer or reactor with an isolating transformer, commonly used in pilot-wire protective-relaying schemes. In the case of the two-winding neutralizing reactor, excitation of the reactor is achieved by dependence upon cable capacitance to ground or upon some specific added capacitance connected between each line and ground, as shown in Figure 17. This scheme, in which a dc blocking capacitor is used between the two halves of the isolating transformer, permits dc supervision because the dc source feeding through each of the two halves of the isolating transformer primary complete the dc loop circuit through the neutralizing reactor to the other end of the line.

This scheme is limited in that

a) It is not usually suitable for interfering voltages above 4 kV rms simply because of the high cost of the exciting capacitors, if required. The reactors also can become quite costly because of the required high magnetizing impedance.

b) It does not lend itself naturally to the maintenance of longitudinal balance, if required, particularly where more than one pair is involved and primarily due to variations in the values of the exciting capacitors and the inductors, unless a multi-wound type unit is used.

Copyright © 2001 IEEE. All rights reserved.
Copyright The Institute of Electrical and Electronics Engineers, Inc.
Provided by IHS under license with IEEE
No reproduction or networking permitted without license from IHS
Not for Resale

c) Paralleling several protective relaying circuits within the same cable may result in noise or metallic voltages, or both, because of circuit unbalances.

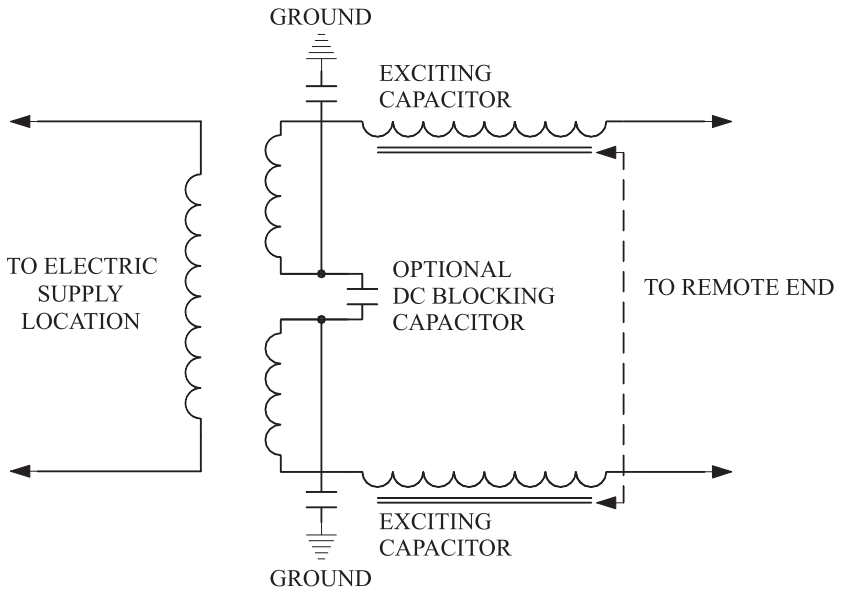

Figure 17—Two-winding capacitor-excited neutralizing reactor in tandem with an isolating transformer

Beyond the 4 kV rms level, a three-winding type of neutralizing transformer is generally more economical to use, either single-pair or multipair, either alone or in tandem with isolating transformer(s), as shown in Figure 18. A separate winding with highly insulated exciting conductor(s) is required, but this type of circuit has certain advantages:

a) The exciting capacitors are eliminated.

b) The neutralizing transformer can be designed for a lower longitudinal impedance, for much higher voltages, and at a lower per pair cost.

c) A single multipair neutralizing transformer can be used.

d) Where multi-use cables are involved, a lower cost neutralizing transformer can be used, which, under worst-case conditions, may result in a high remanent voltage. In this instance, only low-voltage-rated isolating transformers need be used in the tandem configuration, and only on the critical pairs, assuming that any sparking of protector blocks, if installed, would not interfere with the relaying scheme (i.e., some audio-tone schemes might be affected).

e) The basic scheme may be used for ac or dc pilot-wire schemes, audio-tone channels, supervisory control, telemetering and ordinary telephone, or any combination of these services.

8.8 Protection configuration employing modular high dielectric and optic isolators

High dielectric and optic isolators may be used either as a single-channel isolation device in the protection system described in 8.3, or as a cabinet specifically designed to mount a multiplicity of transformer and optic isolators which may be used to replace the entire high-voltage interface cabinet

Copyright © 2001 IEEE. All rights reserved.

Copyright The Institute of Electrical and Electronics Engineers, Inc.
Provided by IHS under license with IEEE
No reproduction or networking permitted without license from IHS
Not for Resale

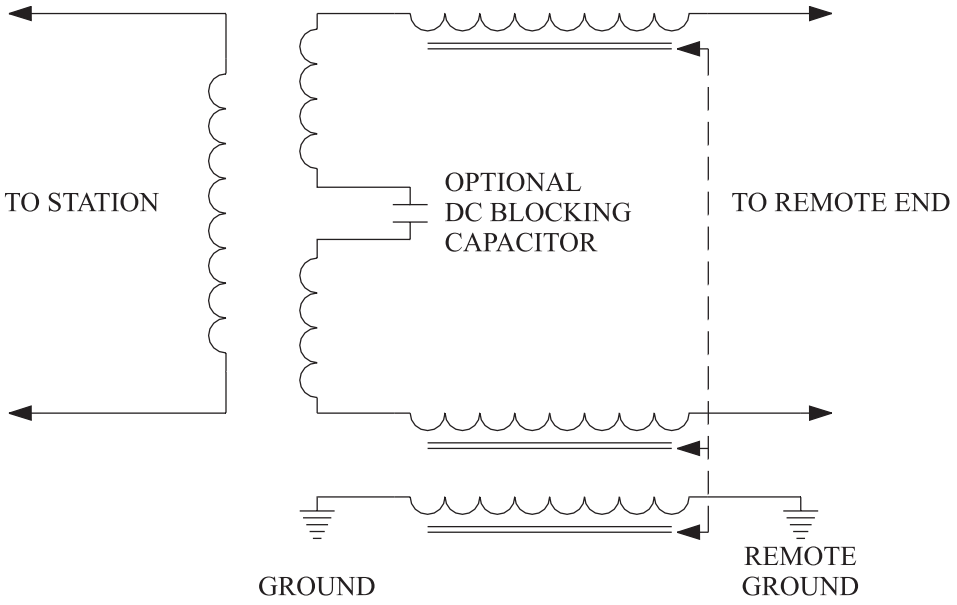

Figure 18—Three-winding neutralizing transformer in tandem with an isolating transformer

of such a system. In either case, the design criteria for placement of the cabinet, choice and treatment of the dedicated cable, choice of surge arrester, etc., should apply as described in 8.3. A location should be selected for the surge arrester to minimize the arrester to grid grounding conductor length.

Factory designed and constructed protection system cabinets are available that accept plug-in modular optic and transformer devices for various numbers of communication channels. Available optic and transformer devices can handle many forms of telecommunication signals used by the power and communications industries including regular telephone service, telemetry service, tone relaying service, dc relaying service, analog data service, high speed digital data (DS-1) service, etc. The major advantages of using a modular system based on high dielectric properties are the reduction of field engineering required to provide a safe and reliable system and the flexibility of being able to change communication service types and add or remove channels readily.

High dielectric and optic isolator devices require power for the circuitry on both the CO and the electric supply location sides of the device. Power for the CO side may be provided over the central office cable or from local power through a power distribution transformer. If a local distribution transformer is used, it should have a dielectric strength between the primary and the secondary windings (including the neutral) at least equal to the voltage for which the high-voltage interface cabinet is designed, and the same precautions should be observed for its wiring and for the associated power supply for ensuring that safety and voltage isolation as are specified for the communications pairs. A power transformer and power supply for the CO side power may be supplied as part of an optic coupling protection cabinet.

8.9 Protection practices for electric supply locations services

Table 1 and Figure 19 are used together to determine the various protection options available for typical service types. As mentioned elsewhere in this standard, views on protection of electric

Copyright © 2001 IEEE. All rights reserved.
Copyright The Institute of Electrical and Electronics Engineers, Inc.
Provided by IHS under license with IEEE
No reproduction or networking permitted without license from IHS
Not for Resale

supply locations services may vary, not only between power and telephone utility people, but also within their respective industries. Some of the options shown in Table 1 and Figure 19 are more common to leased services while other options are more common to services provided over power utility or user-owned facilities. This practice emphasizes that, in the case of leased facilities, mutual agreement upon the protection options selected is required between the responsible telephone and power utility engineers. In most cases, those options showing no protection at the electric supply locations or non-electric supply location (i.e., hard-wired) are not recommended for leased facilities.

There are other possible options than those indicated in Table 1 and Figure 19.

8.9.1 Description of protection table and protection schematic chart

The design configurations contained in Table 1 and Figure 19 are based on Level I = 300 V peak, Level II = 301–1000 V peak, Level III = higher than 1000 V peak. Table 1 and Figure 19 shall be amended by the user to accommodate other voltage levels.

8.9.2 Protection table for electric supply location services (Table 1)

This table is to be used in conjunction with the simplified protection schematic chart (Figure 19) to determine the various protection options available for any particular service type. A description of the various columns is given below.

a) *Service description*. Examples of the more common types of electric supply location services are listed in this column, grouped by transmission type (i.e., dc, ac, audio tone, etc.) and reliability importance.

b) *Service types*. Service types shown in this column are described and classified in 6.1 of this document.

c) *Reliability or service performance objective classification*. Service performance objective classification or reliability is described in 6.2. The responsible power utility engineer should specify the SPO classification regardless of whether the service is leased, power company owned, or user owned. Typical SPO classifications are shown in this column opposite each service type grouping. These could be specified differently, however, by the power company, depending on the circumstances.

d) *GPR plus induced voltage level columns*. These columns list the various figures and options that are permissible for each voltage level for each particular type of service listed. Instructions on how to use Table 1 are given in 8.9.4. As indicated by the general heading, a voltage level is established by adding the GPR voltage to that of any induced voltage that may appear during a fault on the power system. (See IEEE Std 367-1996.)

8.9.3 Simplified protection schematic chart (Figure 19)

This chart is intended to show the typical protective devices to be used with various service types depending upon the SPO class of service and the voltage range. There are five basic protection configurations. Configuration 1 involves no special protection (i.e., isolating or neutralizing devices). Configurations 2, 3, and 4 are various isolating arrangements. Configuration 5 is a neutralizing arrangement. These configurations are not intended to show the complete system protection layout, which is covered in detailed drawings elsewhere in this subclause.

Copyright © 2001 IEEE. All rights reserved.

Copyright The Institute of Electrical and Electronics Engineers, Inc.
Provided by IHS under license with IEEE
No reproduction or networking permitted without license from IHS
Not for Resale

Copyright The Institute of Electrical and Electronics Engineers, Inc.
Provided by IHS under license with IEEE
No reproduction or networking permitted without license from IHS

Table 1—Typical protection table for electric supply location services**

Service description	Service type (see 6.1)	Reliability or service performance classification (see 6.2)	GPR plus induced voltage level (see 8.1)		
			Level I (Column 1) Permissible configuration and options*	Level II (Column 2) Permissible configuration and options*	Level III (Column 3) Permissible configuration and options*
Basic telephone Alarm reporting telephone	1(a) 1(a)	B or C B	Configuration 1 with (*W*2 or *W*4) and *X*1and *Y*1	Configuration 1 with (*W*2 or *W*4) and *X*1 and (*Y*1 or *Y*2 or *Y*4) or Configuration and options in Column 3	Conf. 2 with (*W*2 or *W*4) and (*X*1 or *X*2) and (*Y*1 or *Y*2) Conf. 3 with (*W*1 or *W*4) and *X*1 and (*Y*1 or *Y*4) and *Z*4 Conf. 5 with (*W*2 or *W*4) and (*X*1 or *X*2) and (*Y*1 or *Y*2)
Teletype DC telemetry DC control FM mobile radio with dc control Alarm Operational voice with dc signaling	1(b)	B	Configuration 1 with (*W*2 or *W*4) and *X*1 and *Y*1	Configuration 1 with (*W*2 or *W*4) and *X*1 and (*Y*1 or *Y*2 or *Y*4) or Configuration and options in Column 3	Conf. 3 with (*W*1 or *W*4) and *X*1 and (*Y*1 or *Y*4) and *Z*4 Conf. 5 with (*W*2 or *W*4) and (*X*2 and *Y*2) or (*W*1 or *W*2 or *W*4) and *X*1 and *Y*1
DC telemetry with automatic load control Remote or other dc tripping	1(b) 2	A A	Configuration 1 with (*W*1 or *W*3) and *X*1 and *Y*1 or per column 3	Protect as per Column 3	Conf. 3 with (*W*1 or *W*4) and *X*1 and (*Y*1 or *Y*4) and *Z*4 Conf. 5 with *W*3 & *X*3 & *Y*3 & *Z*7 or *Z*8 or *W*3 and *X*1 and *Y*1 or *W*1 and *X*1 and *Y*1 or (*W*3 or *W*8) and *X*8 and *Y*8 and *Z*8
Pilot wire protective relaying (60 Hz ac with or without dc supervision)	2	A	Configuration 1 with (*W*1 or *W*8) and *X*1 and *Y*1 and *Z*1, or *Z*8 or *Z*12	Protect as per Column 3	Conf. 3 with (*W*1 or *W*4 or *W*9) and *X*1 and (*Y*1 or *Y*4 or *Y*9) and (*Z*4 or *Z*9) Conf. 5 with *W*8 and *X*8 and *Y*8 or (*W*1 or *W*8) and *X*1 and *Y*1 or (*W*1 or *W*8) and *X*5 and (*Y*1 or *Y*8)

Not for Resale

Copyright © 2001 IEEE. All rights reserved.

Telemetry, load control, and supervisory control with VF tones Operational data channels FM mobile radio with VF signaling Operational voice with VF signaling	3	B	Configuration 1 with (*W*1 or *W*2 or *W*4) and *X*1 and *Y*1	Configuration 1 with (*W*1 or *W*2 or *W*4) and *X*1 and (*Y*1 or *Y*2 or *Y*4) or Configuration and options in Column 3	Conf. 3 with (*W*1 or *W*4 or *W*6) and *X*1 and (*Y*1 or *Y*4 or *Y*6) and (*Z*1 or *Z*4 or *Z*6) Conf. 4 with *W*1 and *X*11 and *Y*1 or (*W*2 or *W*4) and *X*10 and (*Y*1 or *Y*2) or (*W*2 or *W*4) and *X*10 and (*Y*9 or *Y*12) and (*Z*9 or *Z*12 or *Z*7) Conf. 5 with (*W*2 or *W*4) and *X*1 and *Y*1
Telemetry, load control, supervisory control, and other critical services Audio tone protective relaying	3 4	A A	Configuration 1 with *W*6 and *X*1 and *Y*1 or Configuration 1 with *W*1 and *X*1 and *Y*1	Protect as per Column 3	Conf. 3 with (*W*1 or *W*4 or *W*6) and *X*1 and (*Y*1 or *Y*4 or *Y*6) and *Z*6 Conf. 4 with *W*6 and *X*11 and *Y*6 or *W*6 and *X*11 and *Y*1 Conf. 4 with *W*1 and *X*11 and *Y*1 Conf. 5 with *W*3 and *X*6 and *Y*6 or *W*3 and *X*1 and *Y*1 Conf. 5 with *W*1 and *X*1 and *Y*1
Idle and un-assignable pairs			See 8.9.5		

*Prefix letters *W*, *X*, *Y*, and *Z* represent protection location; see Figure 19. Suffix numbers 1–12 represent protection options; see Figure 19. Protection at location *Z* is normally the same as at location *W*.
**Table 1 should be used in relation to Figure 19.

Copyright © 2001 IEEE. All rights reserved.
Copyright The Institute of Electrical and Electronics Engineers, Inc.
Provided by IHS under license with IEEE
No reproduction or networking permitted without license from IHS
Not for Resale

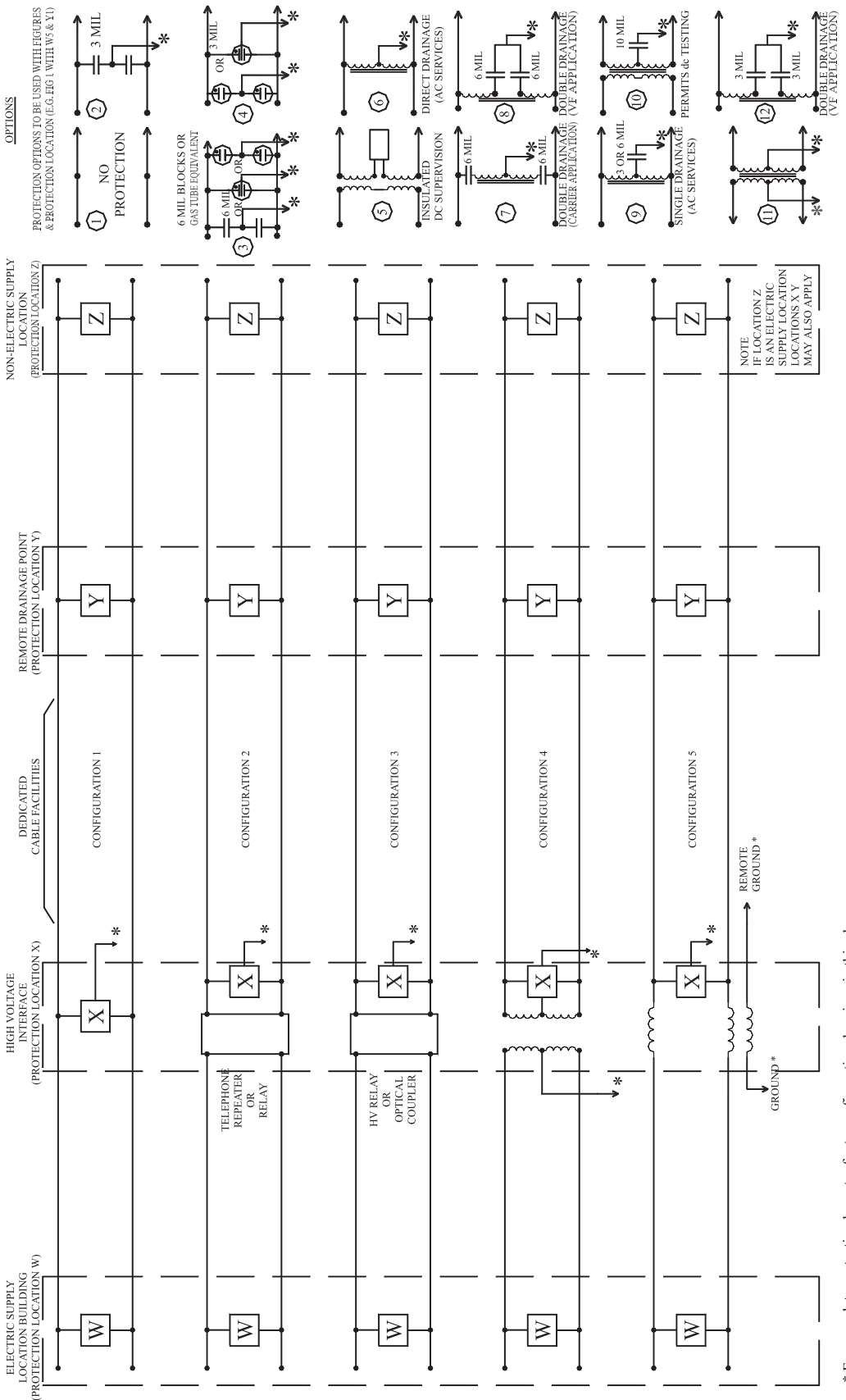

* For complete protection layout refer to configuration drawings in this clause.

Figure 19—Simplified protection schematic chart for an electric supply location

Copyright © 2001 IEEE. All rights reserved.
Copyright The Institute of Electrical and Electronics Engineers, Inc.
Provided by IHS under license with IEEE
No reproduction or networking permitted without license from IHS
Not for Resale

The chart shows four different protection locations:

a) The electric supply location building

b) High-voltage interface location (normally near the fence line of the electric supply location or at the control building)

c) Remote drainage point

d) Non-electric supply location

The protection options for the cable between the electric supply location building and the high-voltage interface are shown in the electric supply location building in this chart. This protection could be placed alternatively on the station side of the high-voltage interface as shown in Figure 12, Figure 13, Figure 14, Figure 15, and Figure 16; however, the question of safety at the terminal location should be addressed.

The protection options in the electric supply location building and at the non-electric supply location are the same, unless otherwise indicated.

If the cable between the electric supply location building and high-voltage interface is classified as exposed, then similar protection options are required at both locations, with consideration being given to ground loop currents.

In Figure 19 under Options are shown various protector arrangements (i.e., drainage, carbon blocks, gas tubes) to be used, depending upon service type and voltage level.

8.9.4 Use of protection table and schematic chart (Table 1 and Figure 19)

From the protection table, the protection options are identified in the appropriate voltage level column opposite the particular service type and SPO class.

The configuration specified and the options to be used at each location should first be selected. For example, configuration 1 with *W*3 and *X*1 and *Y*1.

a) Refer to configuration 1 on the simplified protection schematic chart.

b) The protection at an electric supply location building and non-electric supply location will be 6 mil carbon blocks or gas tube equivalent.

c) *X*1 and *Y*1 mean no protection at the high-voltage interface or remote drainage point. This means that there is no high-voltage interface and no remote drainage location.

d) For the sake of brevity, options may be shown as follows:

Configuration 2 with *W*2 and (*X*1 or *X*2) and (*Y*1 or *Y*2).

This equates to the following options:

1) Configuration 2 with *W*2 and *X*1 and *Y*1

2) Configuration 2 with *W*2 and *X*1 and *Y*2

3) Configuration 2 with *W*2 and *X*2 and *Y*1

4) Configuration 2 with *W*2 and *X*2 and *Y*2

Copyright © 2001 IEEE. All rights reserved.

Copyright The Institute of Electrical and Electronics Engineers, Inc.
Provided by IHS under license with IEEE
No reproduction or networking permitted without license from IHS
Not for Resale

8.9.5 Treatment of idle, and unassignable or spare pairs and equipment

Idle, and unassignable or spare pairs and/or equipment generally fall into one of the following categories:

a) *Idle cable pairs*. These pairs are electrically continuous from the central office to the electric supply location with all required equipment installed at the high-voltage interface (HVI). Additional protection devices particular to a specific service may be required at the central office and/or the station terminal, but the pairs are otherwise ready for assignment and use. All installations should conform with Figure 9, Figure 10, Figure 11, Figure 12, Figure 13, Figure 14, Figure 15, and Figure 16.

b) *Unassignable or spare cable pairs*. These cable pairs are unassignable because they do not have electrical continuity from the central office to the electric supply location terminal and are usually unterminated in at least one location: at the dedicated/general-use cable interface, at either side of the HVI, or at the inside terminal. One example would be a 100-pair dedicated cable brought to a 50-pair neutralizing transformer.

   If the unassignable cable pairs are in the station cable that is located wholly on the station ground grid, and the HVI is located on the station ground grid, then the pairs could be "cleared and capped," terminated at both ends, grounded at both ends, or any combination of these, based on local conditions. If the HVI is located outside the station fence, distant from station ground, then the station cable should be treated as if it were dedicated cable.

   For the case of unassignable cable pairs in a dedicated cable, whether or not they are spliced to pairs in a general-use cable, the unassignable cable pairs and the metallic cable shield should be totally isolated from local ground at the HVI. This applies regardless of the location of the HVI. Isolation should also be arranged such that accidental contact cannot be made across the HVI.

c) *Spare HVI equipment capacity*. HVI equipment capacity that is considered as spare is that capacity that cannot be readily accessed or that is not connected to assignable cable pairs. As an example, consider a 100-pair neutralizing transformer with only 75 cable pairs connected on the CO and/or station side, i.e., 25-pair spare capacity. Under normal conditions, no specific action is required with respect to this spare capacity because nothing is connected to it. If the spare capacity is in a neutralizing transformer, however, spare secondary windings should not be connected in parallel with the primary winding due to possible problems associated with difference in dielectric insulation levels.

d) *Unassignable cable pairs and spare HVI capacity*. In general, this scenario has two options:

   1) Connect through all facilities and equipment from the CO to the inside terminal on the electric supply location ground grid and treat as assignable or spare cable pairs.
   2) Treat the cable(s) and HVI spare capacity separately, as outlined above.

e) Spare pairs in a high-voltage neutralizing transformer, i.e., over 500 V, should *not* be connected in parallel with the transformer exciting winding since doing so would violate the secondary conductor-to-conductor dielectric withstand capability.

9. Installation and inspection considerations

9.1 Installation considerations related to neutralizing transformers

Installation of a neutralizing transformer (NT) involves both physical and electrical considerations to ensure both personnel safety and operating reliability. The NT may be the only protective device

Copyright © 2001 IEEE. All rights reserved.
Copyright The Institute of Electrical and Electronics Engineers, Inc.
Provided by IHS under license with IEEE
No reproduction or networking permitted without license from IHS
Not for Resale

applied at a particular installation, or it may be applied along with isolation-type devices protecting other parallel communication services provided to the electric supply location. A third application utilizes the NT connected in tandem with an isolation transformer.

The remote side primary terminal of the neutralizing transformer should be terminated outside the agreed zone of influence of GPR using

a) Cable pairs
b) Cable metallic shield
c) A combination of metallic shield and cable pairs
d) Separate external conductor, insulated from ground

The use of available cable pairs to complete the primary circuit has two advantages over the other methods and is usually used by telephone companies because it ensures that the NT primary circuit suffers the same exposure as the cable pairs in service and that the continuity of the primary circuit is not dependent on the integrity of the metallic shield.

In some instances, the remote ground location will be a considerable distance from the NT, even as far back as the CO. Cable pairs connected in parallel can be used, for the external primary circuit, to establish the desired external exciting resistance. The cost of these additional cable pairs compared to an external exciting conductor or a transformer with a lower exciting current, particularly in a case of leased telephone facilities where rental costs are imposed for the use of such pairs, should be considered.

For a transformer located on the electric supply location site, one side of the primary is connected to the station ground system and the other side of the primary is connected to a remote ground location. (See Figure 15, Figure 16, and Figure 20.) The shield of the dedicated cable should be insulated from the electric supply location ground, even if it is not used in the primary circuit, because all grounds to the cable shield in the GPR zone of influence will introduce a voltage stress from core to shield by direct contact or induction due to shield currents, or both.

A desirable location for the neutralizing transformer is on the station ground grid. Since the incoming cable extends to remote ground, it must be isolated from the electric supply location grounding system and insulated for the full GPR voltage. By placing the transformer at the edge of the ground grid, the length of remote side cable exposed to electric supply location potentials can be minimized. The station fence can be isolated or connected to the grounding grid, depending on local conditions. As a general rule, to avoid hazardous touch potentials, the transformer mounting pad (see Figure 20) should be located a minimum distance of 2.5 m from the fence or an open gate, unless that section of the fence is bonded to the grid at that point. Transformers also may be mounted indoors. Local fire regulations, however, may require that plastic or wax-type insulation be used. The oil-filled types are located outdoors, except for those installed in specially constructed vaults.

To avoid damage and to ensure the proper functioning of the neutralizing transformer, the remote-side wiring and cabling should be isolated from the station-side wiring and cabling and station ground. The transformer design, installation arrangement, and dielectric strength of connecting wire to remote ground should be such as to ensure an insulation withstand level equivalent to the combined GPR and induction value plus a safety factor; see IEEE Std 789-1988. The core, shield, and jacket of the cable extended to remote ground also should have adequate withstand capability. Periodic inspections should be made to check that the above requirements have not been violated by inadvertent cable grounds, guy wires, etc.

Figure 20 shows details of the foundation and grounding for a pad-mount installation. A well drained insulating conduit is used for mechanical protection and additional dielectric strength

Copyright © 2001 IEEE. All rights reserved.

Copyright The Institute of Electrical and Electronics Engineers, Inc.
Provided by IHS under license with IEEE
No reproduction or networking permitted without license from IHS
Not for Resale

for the remote-side cable jacket. The use of metallic conduit on the station side to provide additional shielding could be considered. A bare copper ground bus, such as 2/0 AWG, is buried around the mounting pad to reduce hazardous touch and step potentials, as discussed previously. The pad should be located at least 2.5 m from the station fence unless that section of the fence is bonded to the grid at that point. A bare copper conductor, such as 2/0 AWG, is run parallel to the station-side cable and is grounded at the terminal equipment and at the station side of the transformer primary. This conductor provides shielding against lightning and high-frequency transients and also ensures the integrity of the cable sheath circuit and station ground grid.

The transformer design shown has the station-side terminal box and the remote-side terminal box mounted on opposite sides of the transformer for isolation and personnel safety purposes. A 2/0 AWG copper conductor is recommended to bond the terminal boxes and transformer case to the transformer ring ground. This latter ground should be connected to the station ground but should not be near a lightning protection tower or a microwave tower because high lightning currents may enter the grounding system through these structures, thereby producing high GPR at the transformer case.

9.2 Periodic inspection

The protection techniques used for wire-line facilities serving electric supply locations are vastly different from those employed for general, business locations. This is particularly true with respect to location, separation and isolation of ground points and conductors, and to the provision of higher-than-usual insulation levels in cables, transformers, and other protection hardware.

Telephone or power company craftspersons may inadvertently do things that, to them, are almost second nature, but that will negate special protective measures. Two common examples of this activity include the disconnection of a neutralizing transformer's remote ground or primary circuit (either at a central office or during a cable transfer) or the connection of a dedicated cable shield to station ground. It is possible for connections to become loose or burn open, for transformer windings to fail, for insulation to fail or become faulty, etc. Since a protection system is quiescent, many such defects will not become apparent until the protection system fails to function properly under fault conditions, causing failure or damage, or both, to critical electric supply location communication equipment, and, possibly, injury or loss of life.

Periodic, usually annual, detailed inspections by both power utility and telephone company personnel of all aspects of protection facilities in and around electric supply locations and remote ground points are necessary to ensure that special protection requirements have not been violated or negated by conditions such as mentioned above i.e., the rating of the neutralizing transformer should be examined and the present ground potential rise evaluated to see if the neutralizing transformer is adequate to meet the present duty.

The period within which such inspection should be conducted should be worked out mutually by the power and telephone utilities in the case of leased facilities. In addition to planned, periodic tests, this practice recommends that a very thorough inspection of protection facilities be made following each case of faulty or questionable operation of such facilities, particularly if damage has resulted or false relaying has occurred.

Inspection of protection facilities should include all cable plant within the GPR zone, all transformers, remote ground circuits, protectors, and wiring at the electric supply location and at all non power station locations, including telephone company central offices in which special devices such as drainage reactors may be located.

Copyright © 2001 IEEE. All rights reserved.
Copyright The Institute of Electrical and Electronics Engineers, Inc.
Provided by IHS under license with IEEE
No reproduction or networking permitted without license from IHS
Not for Resale

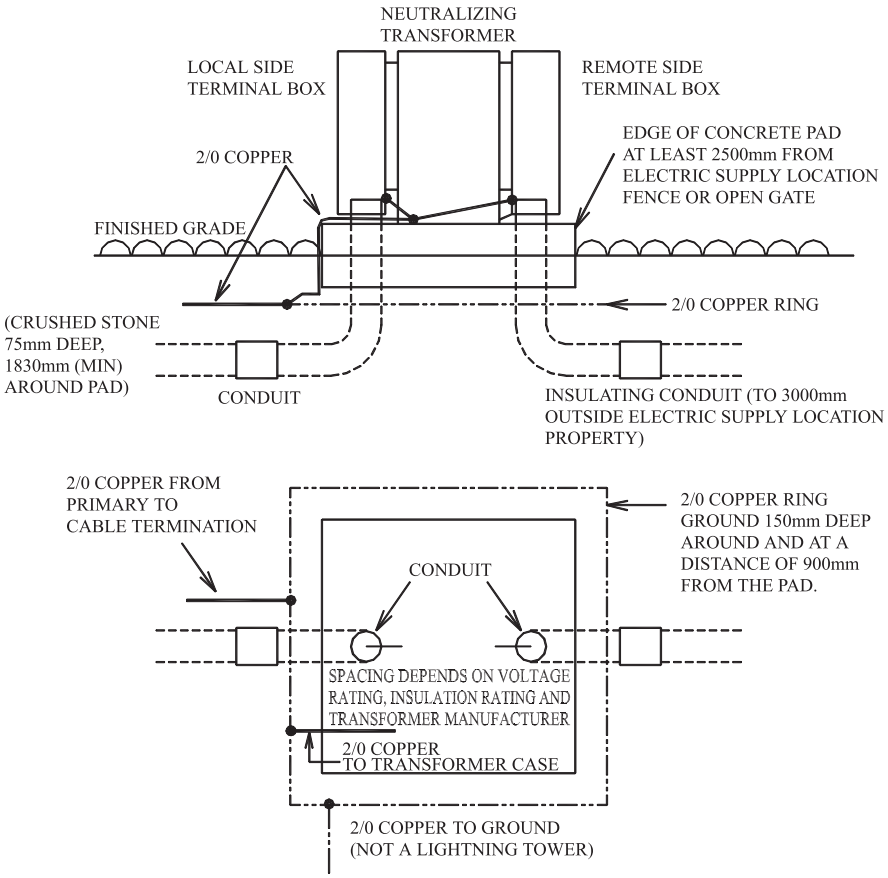

Figure 20—Foundation and grounding diagram

NOTE—It is important that the insulating conduits be sloped away from the concrete pad to ensure proper drainage.

Tests (continuity, polarity, insulation withstand, etc.) on major protection system components such as insulating and neutralizing transformers may also be considered. Such tests would be indicated at any location that has a history of equipment failures or damage. In the case of power utility owned facilities, the power utility usually has available a standard inspection procedure.

10. Safety

10.1 General safety considerations

Hazardous voltages may appear suddenly and without warning on cables (shields and pairs) and on associated protection hardware during fault conditions. The basic safety objective is to protect personnel from coming into contact with both remote and local grounds simultaneously. Therefore, safety consideration will be directed toward two goals:

a) Educating personnel regarding the special hazards of working on communication facilities serving electric supply locations

b) Minimizing the possibility of simultaneous contact with both remote and local grounds and reducing the length of time that personnel are required to work under conditions that may expose them to danger

Copyright © 2001 IEEE. All rights reserved.

Copyright The Institute of Electrical and Electronics Engineers, Inc.
Provided by IHS under license with IEEE
No reproduction or networking permitted without license from IHS
Not for Resale

This practice emphasizes that these exposed conditions include communications plants *external* to the electric supply location itself (including, in some cases, a plant not serving electric supply locations, when such a plant is within the zone of influence of a electric supply location). In the event of excessive neutralizing transformer remanent voltage or dielectric failure of cables or other components within the high-voltage interface, the exposed conditions may extend even further.

Care should be taken to separate the station and remote side terminals and hardware such that physical contact cannot be made simultaneously with both. Separation can be achieved either through distance or dielectric barriers. All exposed HVI metallic components should be bonded to the station or local ground, as appropriate. Special care should be exercised during HVI installation or maintenance activities by using rubber gloves and/or insulating blankets to maintain separation between local and remote grounds. No work should be undertaken on an HVI during an electrical storm. At all times, close cooperation between the power and telecommunications companies is required to ensure personal safety.

The periodic inspection (see 9.2) is also a vital component of the overall safety considerations. All components of the special protection system, including non-HVI location items such as remote ground or primary winding connections for neutralizing transformers and remote drainage reactors, should be verified periodically for proper connection and/or operation.

10.2 Safety considerations in equipment design

In the design of protective equipment for a communications plant serving electric supply locations, consideration of the following features or precautions is recommended:

a) A *dead-front* concept should be used for transformer cases or equipment cabinets, i.e., the external casing always remains at the potential of the local ground.

b) The physical design should protect against inadvertent simultaneous contact with electric supply location and remote location connections on protective apparatus. Barrier covers or other types of insulated closures should be used over all open terminals and exposed, non-grounded metallic parts of protection apparatus and its associated hardware and wiring. This practice highly recommends that as much protection apparatus as possible be housed in nonmetallic cabinets or grounded metallic cabinets that can be securely closed and locked.

c) A sign warning craftspersons of the hazards should be prominently displayed. A typical sign might read:

WARNING: *There is a possible 15 kV or more potential difference between local and remote ground conductors. Do not interconnect local and remote grounds. Refer questions to protection engineer.*

d) On-site wiring should be done prior to connecting communication and signal cable pairs and shield. Pre-wiring of protective equipment cabinets at the factory would minimize on-site activity.

e) If arresters, gaps, and drainage units are not used, the cable shield should be cut and isolated at a point removed from local ground to prevent craftspersons from inadvertently interconnecting local and remote grounds at the electric supply location.

f) Properly insulated wire and plastic shields should be used on the central office side of protection apparatus at the HVI, or on the electric supply location side at the remote drainage protection location, to protect craftspersons from contact with remote potential.

Copyright © 2001 IEEE. All rights reserved.
Copyright The Institute of Electrical and Electronics Engineers, Inc.
Provided by IHS under license with IEEE
No reproduction or networking permitted without license from IHS
Not for Resale

10.3 Safety related to installation and maintenance

All safety precautions, detailed in applicable safety practices, should be observed when installing or maintaining protective devices at or in the vicinity of electric supply locations, or when placing cables within the zone of influence of the GPR. The following precautions are of particular importance:

a) When installing a new cable, the station end should be connected first, while isolating the field end from ground. If used, high-voltage disconnect plugs at the high-voltage interface should then be removed to isolate the station end from station ground while connecting the field end to the cable going to the remote location. High-voltage disconnect plugs are reinserted after all pairs and shield connections have been made. The use of rubber gloves and insulating blankets is mandatory when working on or near protective equipment or communication cables serving the electric supply location.

b) In wiring protective transformers, wiring and equipment associated with the electric supply location side of the transformer shall be adequately separated from the central office side to withstand impulses up to the basic impulse level of the protection apparatus.

c) Bonding and grounding procedures in installing protective devices are extremely important. A faulty ground or failure to bond can make an expensive installation inoperative. Bonding and grounding procedures have been clearly defined and should be meticulously followed. Refer to IEEE Std 80-2000 for further information.

d) Consideration should be given to including telephone cable work at electric supply locations in the permit and tagging system used to protect personnel working on power circuits.

e) Work shall not be performed on communication circuits when electrical storms are occurring in the area through which the circuits pass. Furthermore, work should not be performed on equipment that has become wet from rain or other causes.

f) When both telephone and power company personnel are involved in an installation, close cooperation between the companies is required to ensure personnel safety.

11. Summary

The protection of wire-line communications facilities serving electric supply locations is a complex subject involving several disciplines. On one hand, there are the protection schemes and their hardware employed where the electric power utility alone is involved in protecting its own wire-line communication circuits. On the other hand, there are the leased telephone wire-line facilities that involve additional protection problems. In the first case, a question of satisfying only the operational, personnel safety, and reliability needs of the power utility itself is essential. Personnel and public safety is of utmost importance to both utilities, but the power utility personnel are more accustomed to working on or near high-voltage circuits. The use of the leased telephone facility involves all the problems of the power utility owned services plus the problems associated with the possible impairment to the general use telephone plant and wider exposure of non-power utility personnel. There are possible or even probable different treatments for the protection requirements for these two classes of facilities. Within the electric power utility industry itself, there are divergent opinions regarding protection schemes just as there are within the telephone industry. There are also different approaches, for example, around the world.

In the case of the electric power utility or user-owned circuits, the maximum permissible interfering voltage and time duration are often higher without the need for special protection than are permitted by many telephone utilities. Some telephone administrations also permit higher interfering voltage levels without special protection.

Copyright © 2001 IEEE. All rights reserved.

Copyright The Institute of Electrical and Electronics Engineers, Inc.
Provided by IHS under license with IEEE
No reproduction or networking permitted without license from IHS
Not for Resale

No matter which utility or utilities are involved, as accurate a prediction as possible should be made of the magnitude and time duration of the interfering voltage. The level of protection established and agreed upon should be consistent with the SPO class of the circuits involved. Safety questions should be considered in all cases.

Obviously, there will be economic considerations as to the basic protection schemes to be employed as well as to the hardware specifications. In the case of leased (rented) telephone facilities, the additional question of the use of a high dielectric dedicated cable from the electric supply location to a point outside the influence of the electric supply location ground grid should also be considered and agreed upon if the dielectric of a general-use type cable is determined to be inadequate. The effects on or from telephone subscribers' protection equipment within the zone of influence should also be considered.

Unfortunately, laying down hard and fast protection rules is very difficult. It is important, therefore, that this practice contains several options and acknowledges that not every option will necessarily be acceptable to all personnel involved. The determination of the electric supply location ground potential rise or induced voltage, or both, will usually involve several engineering departments within the power utility. The maximum GPR and induced voltage calculations and any derating factors used in protection design are critical to the success of any wire-line protection scheme. These voltages are essential for the design of the protective systems and devices. A reference on this subject is IEEE Std 367-1996. The relay and communication engineers will then design a protection system to suit their own service performance objectives and safety needs. Up to this point, there will have been a number of engineering judgements made. Where there is a leased telephone facility involved, however, the relay and communication engineers from the power utility should then come to a mutually acceptable agreement with the engineers from the telephone utility on a protection scheme and its hardware in order to achieve the desired results. In order to minimize difficulties, this cooperative consultation should begin at a very early stage in the life of a project and such cooperation should be an ongoing process. Essentially, an engineering solution should be employed that will result in the most economical solution to all concerned. Rigid positions, if taken by either utility without sound engineering evaluations, usually will not produce the most satisfactory solution. Consultation and cooperation are, therefore, paramount.

Copyright © 2001 IEEE. All rights reserved.
Copyright The Institute of Electrical and Electronics Engineers, Inc.
Provided by IHS under license with IEEE
No reproduction or networking permitted without license from IHS
Not for Resale

Annex A

(informative)

Characteristics of protection apparatus

A.1 Air gap protectors

Air gap protectors use air as the discharge medium. They are open-circuit devices that pass no significant current at normal operating potentials. Air gap protectors are normally connected to or closely associated with the protection of communications circuits, equipment, plant, and personnel.

Air gap protectors usually consist of a ground electrode and one or two line electrodes that are made of carbon or metal. If the potential between a line and ground electrode should rise to the point at which the sparkover rating of the gap is exceeded, an arc will be established, thereby grounding the line conductor. These devices are designed to be self-restoring within their rated limits. Unlike surge arresters, most types are not designed to interrupt power follow current. They will produce electrical noise when arcing.

Air gap protectors are described in more detail below.

Carbon block protectors. Two carbon blocks mounted with an air gap between them so that sparkover between them will occur at a particular voltage. These devices are connected so as to provide a path to ground or to bypass a piece of equipment and prevent dielectric stress in excess of the gap sparkover voltage. Usually, a carbon block protector is provided with an arrangement so that sustained current will melt a fusible pellet or soften a bonding material and permit a spring-loaded contact to permanently connect the protector terminals. This provides a *fail-short* feature. Repeated protector operation (flashover of the gap) tends to lower the breakdown voltage and may cause reduced gap resistance or complete short circuit.

Carbon block protectors are made in various configurations, with various flashover voltages and with various degrees of current carrying capacity. They are sometimes used in conjunction with fuses or other auxiliary equipment such as drainage reactors.

Spark gaps (fixed or adjustable). These gaps consist of air dielectric between two electrodes, in some types adjustable, which may be any combination of several basic shapes. Breakdown voltage will vary with several factors: gap spacing, rate of rise of applied voltage, electrode shape, air pressure and temperature, and the presence of humidity and dust. The gaps can be designed to coordinate with power frequency current magnitude by proper selection of electrode material and electrode shapes. Some characteristics are shown in Figure A.1.

Three-element horn gap arrester characteristics. A horn gap is an air gap metal electrode device consisting of a straight vertical round electrode, usually grounded, and an angular shaped round electrode, usually insulated from ground, whereby the apex of its included angle is placed alongside and towards the bottom of the vertical electrode with an air gap of usually less than 1 mm between them. A phenomenon exists whereby an arc struck across the air gap at the closest point between the two electrodes progressively climbs upwards between the two electrodes until the air gap becomes too long to sustain the arc. At that gap length, the arc is automatically quenched.

In the case of the three-element horn gap arrester, the common or center electrode should be a round smooth copper rod, at least 5 mm in diameter, which is solidly bonded to ground. The two angular side or line electrodes should be of similar material but well insulated from ground. They

Copyright © 2001 IEEE. All rights reserved.

Copyright The Institute of Electrical and Electronics Engineers, Inc.
Provided by IHS under license with IEEE
No reproduction or networking permitted without license from IHS
Not for Resale

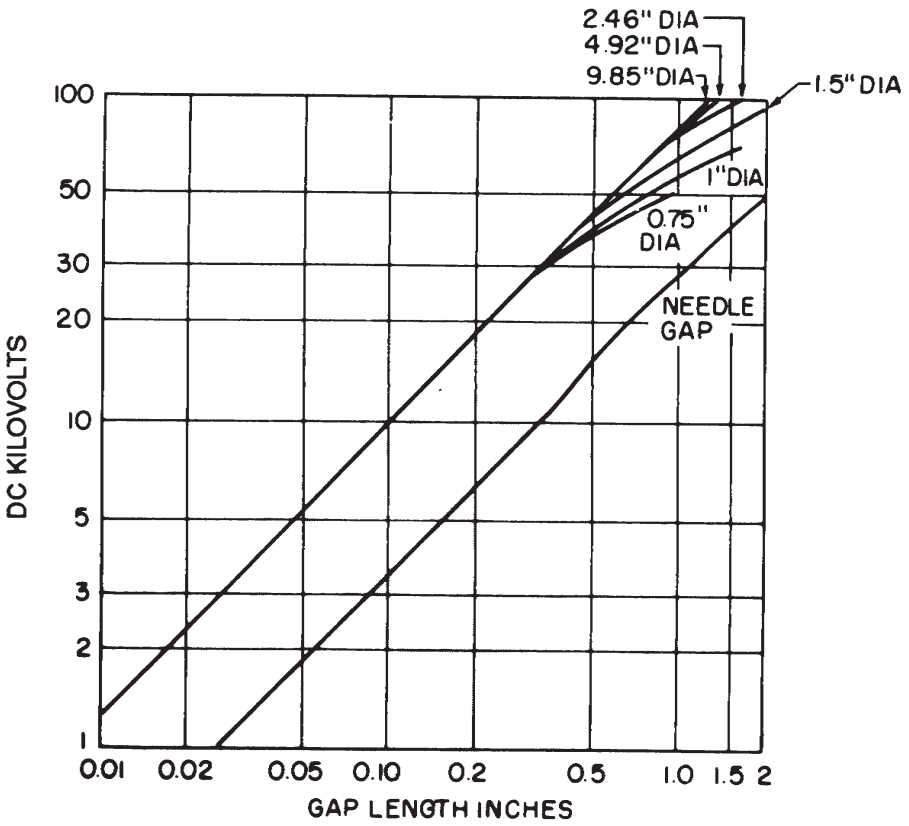

Figure A.1—Typical spark-gap breakdown voltages

must be so designed that their spacing to the center electrode can be varied. The included angle of the angular adjustable electrodes must be such that the air gap between the top of the center grounded electrode and the top of the angular electrode is at least 75 mm.

The air gap at the closest point between the electrodes should be adjustable from 0.2 mm to 10 mm. The adjustable line electrodes should be insulated from ground for at least 30 kV under frost or rain conditions and preferably should be mounted on porcelain insulators.

A.2 Gas tube characteristics

Gas tubes consist of metal electrodes encased in a glass or ceramic envelope that contains an inert gas or combination of gases. They may consist of two electrodes generally connected between one conductor of a circuit and ground (see Figure A.2) or of three electrodes generally connected between the two conductors of a circuit and ground (see Figure A.3). Low-pressure gas tubes (for example, 0.1 atmosphere) use relatively large spacing between electrodes. If air enters such a gas tube through loss of its seal, the sparkover voltage is substantially raised, and desired voltage coordination with the protected circuit may be lost. Backup protection against loss of seal is frequently provided by paralleling the gas tube with a carbon block protector of slightly higher sparkover voltage than that of the gas tube. Backup protection against the loss of seal is provided in some newer gas tubes by building an external air gap into the protector assembly or by designing the tube to operate at approximately atmospheric pressure so that loss of seal makes little change in sparkover voltage.

Copyright © 2001 IEEE. All rights reserved.
Copyright The Institute of Electrical and Electronics Engineers, Inc.
Provided by IHS under license with IEEE
No reproduction or networking permitted without license from IHS
Not for Resale

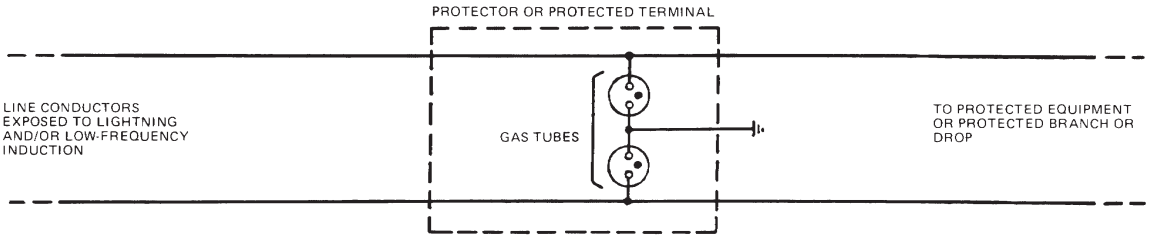

Figure A.2—Schematic of a typical fuseless protector or terminal equipped with two-element gas tube protectors only

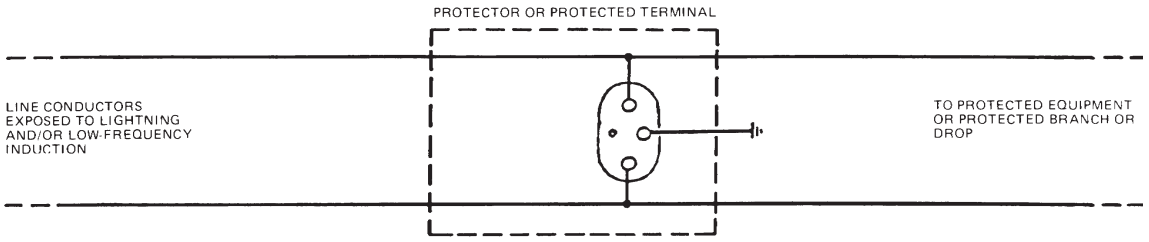

Figure A.3—Schematic of a typical fuseless protector or terminal equipped with a three-element gas tube protector only

The major difference between two-electrode and three-electrode gas tubes is that if one gap of the three-electrode tube is operated by a surge, the surge firing voltage of the other gap is lowered, and, generally, it also will operate within a few microseconds.

In many situations in which a longitudinal surge is present on both conductors of a circuit, the three-electrode tube will operate almost simultaneously on both sides, thus preventing large metallic surges through the protected equipment. This characteristic may be an advantage to the protection of some types of equipment. Typical operating characteristics of gas tubes are shown in Figure A.4. Performance criteria for gas tubes are found in references [B3], [B9], and [B17]. Two and three-electrode devices have similar characteristics and may be used interchangeably.

A.3 Solid-state protector (SSP) characteristics

New semiconducting devices have been developed for telecommunication line overvoltage protectors as an alternative to carbon block or gas tube protector units for central office, building entrances, and other applications. The solid-state units are comparable in physical size to carbon block or gas tube protectors. Reduced maintenance and longer service life than carbon block or gas tube "arc discharge" devices are predicted. However, further studies, including long-term field trials, are necessary to verify and quantify these claimed advantages.

Several improved features should be noted:

a) Lower power dissipation at current above the hold current due to low on-state voltage

b) Tighter control over the operating voltage

c) More stable operation with age

d) Lower generated noise during clamping

Copyright © 2001 IEEE. All rights reserved.

Copyright The Institute of Electrical and Electronics Engineers, Inc.
Provided by IHS under license with IEEE
No reproduction or networking permitted without license from IHS
Not for Resale

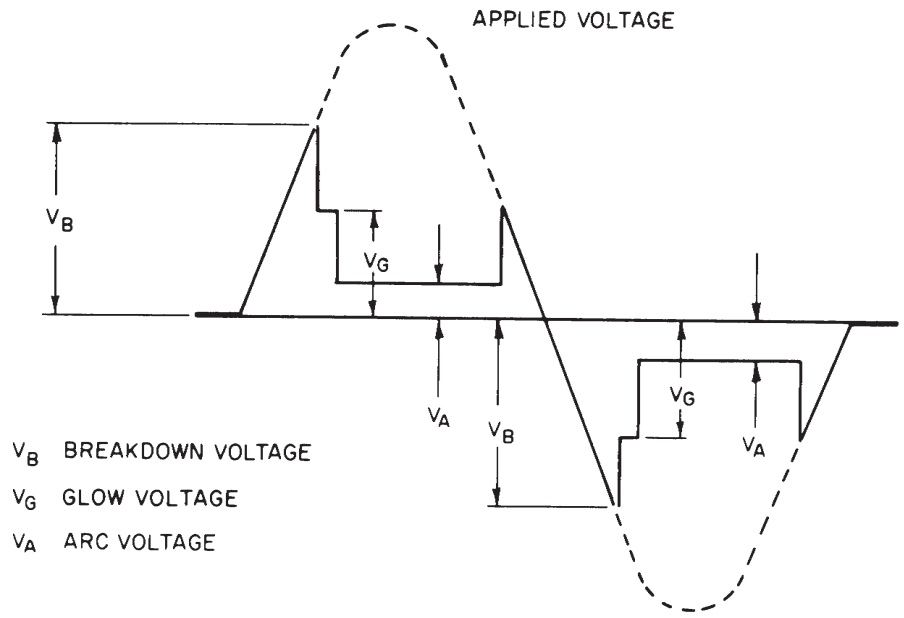

Figure A.4—Typical voltage characteristics of a two-element gas tube protector

The performance characteristics of SSP protector units are temperature dependent. The characteristics of gas tube and carbon block protector units are constant throughout the temperature range expected in the environment (from −40°C to 65°C). Thus, the SSP characteristics will vary with temperature changes above or below room temperature (20°C).

Some units have semiconductor elements between each conductor and ground. Other designs also have semiconductor elements between conductors. In the latter unit, when the designed breakdown voltage from conductor to conductor or from conductor to ground is exceeded, the unit clamps all three terminals to a low voltage state.

A.4 Isolating or combined isolating and drainage transformers

The communication-type isolating transformer is basically a two-winding transformer with appropriate insulation and impedance characteristics to allow its insertion into a communication pair between the line and terminal equipment serving an electric supply location. Ordinarily, this device does not have dc transmission capability and can be employed to transmit ac signals only.

NOTE—Special transformers using bypass relays can be used to pass dc pulses (see A.8). During periods of electric supply location ground potential rise or inductive interference, or both, these transformers will have a potential between the two windings and between the windings and case (ground).

Isolating transformers are manufactured in single units and in specially designed multiple configurations and are normally available with insulation or isolation values up to 50 kV rms. They are available either as one-to-one ratio or as impedance matching transformers, with primary and secondary impedances to match almost any type of wire or terminal equipment. Power ratings from a few milliwatts to several hundred watts are available, and frequency capability ranges from 17 Hz up to the megahertz range. In general, these transformers have a frequency loss characteristic considerably less than 0.5 dB throughout their pass band frequency range.

Copyright © 2001 IEEE. All rights reserved.
Copyright The Institute of Electrical and Electronics Engineers, Inc.
Provided by IHS under license with IEEE
No reproduction or networking permitted without license from IHS
Not for Resale

Often, isolating transformers are used in a combined isolating and drainage transformer configuration wherein the primary or line side winding can act as well as a center-tapped drainage coil. Drainage capabilities, if required, usually range from 0.25 A to more than 100 A. This type of transformer can be supplied with or without a 17 Hz ringing current capability. For example, on strictly audio tone circuits, a ringing current transmission capability would not be required; thus, the frequency range of such a transformer would range from 300 Hz upwards to specified limits.

Where isolating transformers or combined isolating and drainage transformers are used in situations in which the required secondary insulation withstand capability to ground is much less than that between the primary or line winding and ground (for example, where the transformer is mounted adjacent to the equipment it is protecting), the dielectric between secondary winding and ground can be greatly reduced while maintaining the high insulation between primary and secondary and between primary and ground.

The elimination of a drainage capability and the acceptance of a reduced secondary winding to ground insulation may lead to lower costs.

A.4.1 Typical specifications for a general purpose telephone-class combined isolating and drainage transformer

Typical specifications for telephone-class isolating and drainage transformers should basically reflect the following points:

a) Good frequency response over the desired bandwidth

b) Low insertion losses over a broad bandwidth

c) High dielectric strength

d) High common mode rejection ratio

e) Accurately longitudinally balanced split windings that can also be used for drainage or other purposes

f) Small size and good thermal shock resistance over a wide ambient temperature range

The bandwidth should be the voice frequency range plus the low carrier frequency range and should include the ringing frequency. A reasonably flat response is required over this frequency range, and the ringing voltage drop, if ringing is required, should be reasonably low, consistent with small physical size. Insertion loss over the bandwidth should not exceed 0.5 dB, at least in the bandwidth of interest.

Since the transformer could be used both outdoors, mounted in a protective cabinet, and indoors, it will be subjected to a wide ambient temperature range. Temperature rise of this type of telephone-class transformer is usually very small. Such transformers should usually be capable of operating as combined isolating and drainage transformers; therefore, the primary should be capable of draining at least 0.5 A continuously through the midpoint.

A dielectric withstand capability of 9 kV rms, 60 Hz covers virtually all applications. To avoid insulation degradation, dc equivalent testing is advisable. On the basis that a 9 kV gap-type arrester has a maximum impulse sparkover voltage of 29 kV, a BIL rating of 120% of the maximum sparkover voltage should be acceptable. Higher or lower values may be specified by the user to suit specific applications.

Copyright © 2001 IEEE. All rights reserved.

Copyright The Institute of Electrical and Electronics Engineers, Inc.
Provided by IHS under license with IEEE
No reproduction or networking permitted without license from IHS
Not for Resale

A.4.2 Typical specifications

Table A.1—Typical specifications

Bandwidth or frequency range (3 dB)	17 Hz to 20 kHz [see Notes 2 and 5]
Insertion loss	300 Hz to 4000 Hz — 0.5 dB maximum
Characteristic impedance	600 to 900 Ω range
Impedance ratio	600 to 600 Ω [see Note 1] (optional 600 to 900 Ω_)
Primary winding resistance	15 Ω maximum
Primary drainage capacity	0.5 A minimum [see Note 1]
Surge drainage capacity (primary & secondary)	400 A^2 s (1.2×50 μs test wave)
Secondary winding resistance	20 Ω maximum
Resistance unbalance	less than 1% between winding halves
Inductance unbalance	less than 0.2% between winding halves
Longitudinal balance	80 dB minimum, per IEEE Std 455-1985 [B18]
Common mode rejection ratio	80 dB minimum (17 Hz to 2 MHz)
Ringing frequency voltage drop at 20 Hz	with 90 to 110 V rms, 20 Hz applied to primary, the secondary voltage drop should not exceed 10 V rms with a secondary load of 500 Ω impedance
Insulation tests	dc dielectric test between windings and between both windings and mounting brackets or case—23 kV/3 s [see Note 4] BIL (1.2×50 μs test wave)—35 kV

NOTES:
1—Each half of both primary and secondary windings should be terminated separately so that optional external connections can be achieved.
2—If a ringing capability is not required, the lower limit of the frequency range can read 300 Hz.
3—The insulation test between secondary winding and ground can be reduced to 2500 V rms or 6.5 kV dc if the transformers are inside-mounted, for example, if mounted in a location that is unexposed to severe electrical environment, or if the transformers are located immediately outside the electric supply location fence and a high dielectric cable traverses the ground grid of the electric supply location. The remainder of the dielectric tests should remain as stated.
4—If only the voice frequency range is required, the upper frequency limit can be reduced to 4 kHz. If higher frequencies are to be transmitted, for example, up to 2 MHz, the bandwidth specification should be changed to read:

a) The transformer must pass only carrier frequencies from 3 kHz to 2 MHz.
b) The transformer must pass both voice and carrier frequencies and, therefore, the bandwidth must be 17 Hz to 500 kHz.
c) The characteristic impedance may also have to reflect 135 Ω terminations.

5—Isolating transformers for use on power utility owned circuits may have considerably higher dielectric withstand requirements as well as signal power handling requirements.

A.5 Neutralizing transformer and neutralizing reactors (theory and design concepts)

A.5.1 Neutralizing transformer and reactor operation

A.5.1.1 General

Protection of the telecommunications facility by a neutralizing transformer or reactor is accomplished by introducing a voltage of the proper magnitude and polarity into a cable pair to cancel or

Copyright © 2001 IEEE. All rights reserved.
Copyright The Institute of Electrical and Electronics Engineers, Inc.
Provided by IHS under license with IEEE
No reproduction or networking permitted without license from IHS
Not for Resale

neutralize undesirable common mode voltages arising from electric supply location GPR, longitudinal induction, or both.

A.5.1.2 The three-winding neutralizing transformer

A basic three-winding neutralizing transformer configuration is illustrated in Figure A.5. A primary or exciting circuit is established between the electric supply location ground grid and a remote ground point that is outside the zone of influence of the GPR and induction. During a power fault to ground, the current returning to the power system neutral through R_m, the resistance of the electric supply location ground grid with respect to reference ground, will produce an increase in potential on the electric supply location side of the neutralizing transformer with respect to remote ground. As long as primary reactance remains high relative to primary winding and external circuit resistance, the majority of the rise in ground potential will be developed across the primary winding and will be coupled into each secondary winding with the proper magnitude and polarity to neutralize the common mode voltage applied to the telecommunication conductors by the electric supply location GPR.

The telecommunication pairs are virtually grounded at the end distant from the electric supply location either through impedance to ground of connected equipment or through cable capacitance to ground. Figure A.5 shows that the instantaneous voltage polarities across R_m and the NT primary and secondary windings are in a direction to provide cancellation. Thus, negligible voltage is developed

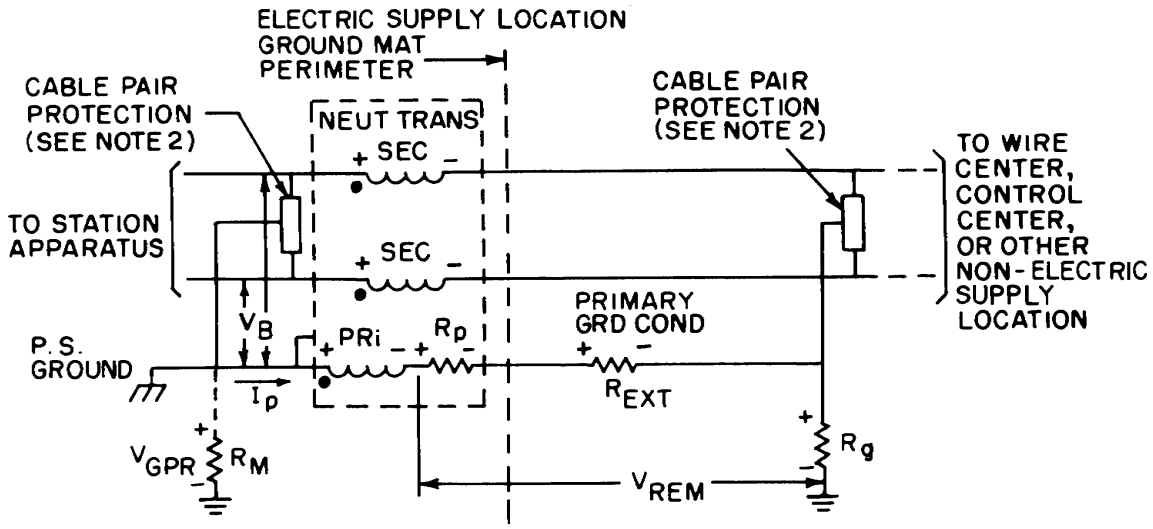

Figure A.5—Three winding neutralizing transformer

NOTES:
1—Instantaneous voltage polarities are shown.
2—Protection, such as carbon blocks or drainage reactors, is usually incorporated into leased telecommunications facilities to protect cable dielectric from damage due to excessive voltage stress. Such protection is usually eliminated on power utility owned cable relaying facilities and is often eliminated on leased telephone facilities.

$$V_{REM} = I_p(R_p + R_{EXT} + R_g) = \frac{V_{GPR}(R_p + R_{EXT} + R_g)}{Z_{PRI}}$$

where

$$Z_{PRI} = \left[(R_p + R_{EXT} + R_g)^2 + (\omega L_{PRI})^2\right]^{1/2}.$$

Copyright © 2001 IEEE. All rights reserved.

Copyright The Institute of Electrical and Electronics Engineers, Inc.
Provided by IHS under license with IEEE
No reproduction or networking permitted without license from IHS
Not for Resale

from telecommunication conductors to ground or across cable-pair protection devices at the electric supply location.

The NT functions in the same manner to neutralize longitudinally induced voltage. In this case, the undesirable common mode voltage arises from coupling with power lines and is distributed along the telecommunication wire pairs and NT primary circuit conductor(s). Neutralization will occur only if the NT primary conductors are exposed to the same magnetic induction as the telecommunications conductors. Thus, the NT primary conductor(s) must be within the same telecommunications cable or must follow the same routing as the telecommunication conductors.

Unlike the isolation transformer, in which the disturbing voltage is applied across the primary-to-secondary dielectric and no longitudinal (common mode) current flows through the transformer windings, the NT primary winding is placed in series with the disturbing voltage. Significant longitudinal current does not normally flow in the NT secondaries. Therefore, the primary winding may be viewed as a longitudinal choke or reactor.

Primary exciting current is a function of the applied voltage and the volt–time area accumulated under the applied voltage waveform. The excitation characteristic of a typical NT is a monotonically increasing relationship between exciting current and accumulated volt–time area. The characteristic may be varied, that is, the value of excitation current that results for a given accumulated volt–time area may be changed by altering either the number of turns, the core area, the air gap(s) within the core structure, the grade of core steel, or a combination of these parameters.

A.5.1.3 The two-winding neutralizing reactor

Neutralizing reactors or two-winding type neutralizing transformers are similar to three-winding type neutralizing transformers except that the primary or exciting winding is omitted. The theory of the two-winding type of neutralizing reactor, as used for neutralizing electric supply location ground potential rise and/or induction, is depicted in Figure A.6. A single-line representation is shown in Figure A.7 in which only one conductor is depicted.

The neutralizing reactor is self-excited through the cable capacitance, C_1, to ground and through exciting capacitance, C_3, and current limiting resistance, R_3, to ground on the station side of the reactor. The disturbing voltage caused by the rise in ground potential, V_{GPR}, and/or by induction is impressed across the circuits consisting of the reactor windings and the capacitances to earth of the external signal conductors and of C_3 and R_3. This disturbing voltage, which is induced directly into the signal conductors, is effectively canceled or neutralized because the exciting current through the reactor windings and external capacitance results in a voltage induced into the signal conductor by transformer action that is of opposite polarity to the disturbing voltage. In order for neutralizing reactor windings to magnetize, there must be a continuous 50/60 Hz path through each winding.

Since the magnitude of the exciting voltage appearing across the reactor coils is dependent upon the magnitude of the external signal conductor's capacitance to ground, C_1, and existing capacitance, C_3, it is often necessary to add additional capacitors, C_2, as shown in Figure A.6 and Figure A.7. In practice, commercially available neutralizing reactors usually require a minimum of 1 μF capacitance to ground for proper excitation. Therefore, if the signal conductor's capacitance to ground is less than 1 μF, it is necessary to add additional external exciting capacitors, C_2.

At the substation, the substation end of the neutralizing reactor is usually grounded through a mutual drainage device, such as the center tap of an isolating transformer, or by capacitors, or a protector. The remote end of the reactor circuit is usually grounded through a protective device.

Copyright © 2001 IEEE. All rights reserved.
Copyright The Institute of Electrical and Electronics Engineers, Inc.
Provided by IHS under license with IEEE
No reproduction or networking permitted without license from IHS
Not for Resale

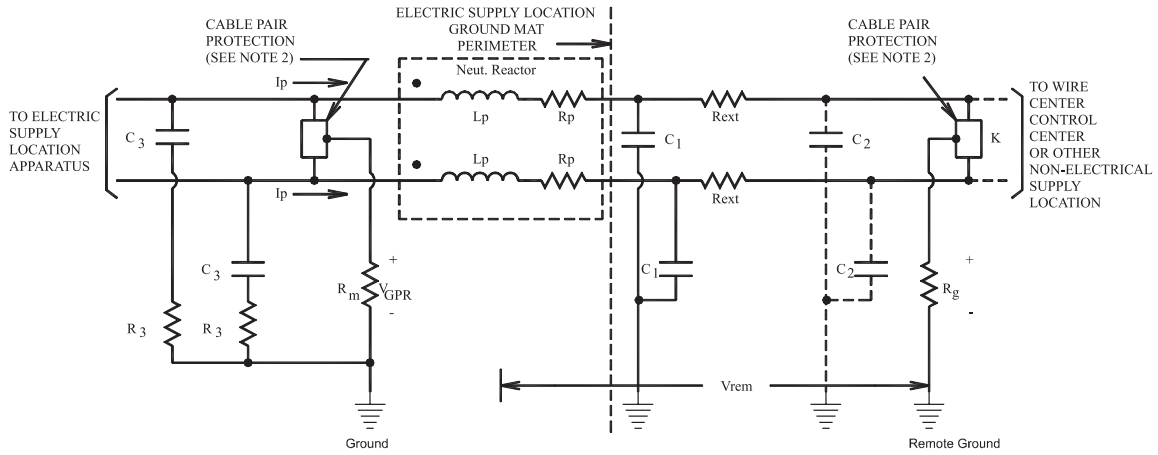

Figure A.6—Two-winding neutralizing reactor

NOTES:
1—Instantaneous voltage polarities are shown.
2—Protection *K*, such as carbon blocks combined with isolating and drainage transformers or drainage reactors, is usually incorporated on leased telecommunications facilities to protect cable dielectric from damage due to excessive voltage stress. Such protection is usually eliminated on power utility owned relaying cable facilities and is often eliminated on leased facilities involving protective relaying.

$$V_{REM} = I_p Z_c = I_p(R_p + R_{ext} + R_3 + Z_{cap})$$

where

Z_{cap} equals the impedance of C_1, C_2, and C_3.

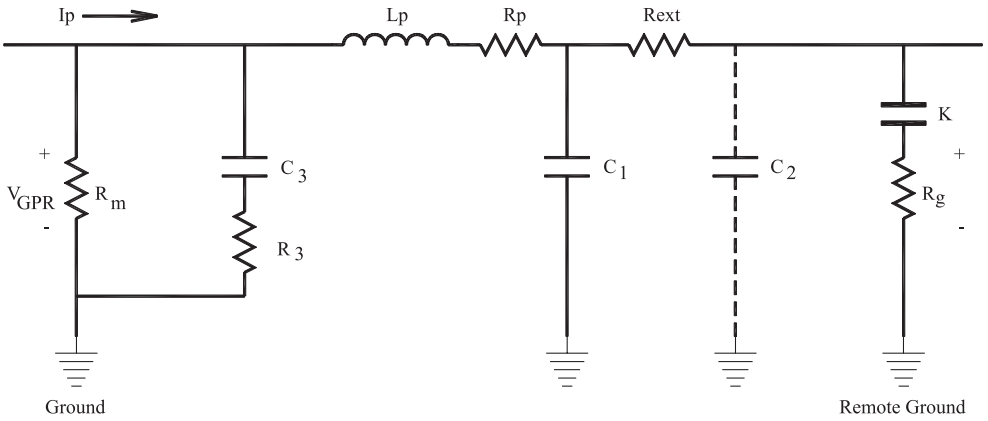

Figure A.7—Two-winding neutralizing reactor equivalent circuit

NOTE—Protector *K* removes R_g from the exciting circuit under normal circumstances.

Nomenclature for Figure A.6 and Figure A.7

R_p = neutralizing reactor winding reactance,
R_g = remote ground resistance,
R_m = substation ground resistance,
R_3 = current limiting resistor (optional),
R_{ext} = external signal conductor resistance,
C_3 = exciting capacitor,
V_{GPR} = substation ground potential rise,
Z_p = reactor impedance,

Copyright © 2001 IEEE. All rights reserved.

Copyright The Institute of Electrical and Electronics Engineers, Inc.
Provided by IHS under license with IEEE
No reproduction or networking permitted without license from IHS
Not for Resale

Z_{cap} = impedance of cable capacitance to earth, C_1, plus added capacitance, C_2, and exciting capacitance, C_3,
V_{rem} = remanent or unneutralized voltage,
I_p = exciting current of the neutralizing reactor,
K = protector gap,
L_p = neutralizing reactor winding inductance,
Z_c = exciting impedance given by the sum of the winding resistance, R_p, the external signal conductor resistance, R_{ext}, and the capacitive impedance, Z_{cap}.

Generally speaking, multipair types of neutralizing reactors are not practical for other than low voltages; however, for high voltages, e.g., 4000 V, external capacitors must be added for proper reactor excitation. In the case of a multipaired cable, the capacitance to ground is relatively the same for all pairs. Therefore, if the capacitance is high enough and the disturbing voltage low enough, no additional capacitors are necessary. However, if additional exciting capacitors are required, the number of circuits should be limited to two or three, particularly for the higher exciting voltages, simply because the normal tolerance on the value of the external exciting capacitors causes unbalanced currents in the signal conductors and, thus, high noise levels.

The neutralizing reactor generally is also limited to a practical maximum exciting voltage of about 4000 V because of the need to add external capacitors with their relative high cost factor for the required higher voltage ratings.

Because of the higher inherent losses in the neutralizing reactor circuit due to the necessary high magnetizing impedance, particularly for the higher voltages, the neutralizing reactor concept is generally limited to a maximum transmission frequency range of about 4 kHz. The greatest use for neutralizing reactors seems to be on dc loop circuits such as pilot wire relaying or supervisory control where the economics are favorable.

With reference to Figure A.6 and Figure A.7, the two signal conductors are considered paralleled so that the parallel impedances are used. The remanent voltage, V_{REM}, between the electric supply location terminal equipment and the remote ground is also the voltage from the signal conductors to the cable sheath. In practice, the neutralizing reactor exciting impedance is quite large when compared with the other impedances of the circuit. Therefore, the neutralizing reactor has almost the full disturbing voltage, V_{GPR}, impressed upon it. The remanent voltage, V_{REM}, is therefore the product of the exciting current, I_p, and the exciting circuit impedance, Z_c, as shown in Figure A.6 and Figure A.7.

A.5.1.4 Remanent voltage

In Figure A.5, the primary winding resistance, R_p, primary external conductor resistance, R_{ext}, and remote ground resistance, R_g, are shown along with cable-pair protection at the electric supply location and the remote ground location. Remote ground for the NT primary circuit should be established at a point well outside the influence of the electric supply location GPR and other power grounds.

That portion of the GPR that appears across R_p, R_{ext}, and R_g is not coupled into the secondary windings and, hence, is not neutralized. The unneutralized portion of the common mode voltage, or remanent voltage, is shown as V_{rem} in Figure A.5. If a remanent voltage is permitted to increase to a level sufficient to operate gas tubes, carbon protector blocks, or other protectors (if installed on the telecommunication conductors), or if remanent voltage exceeds cable dielectric voltage withstand capacity, service will be disrupted. This condition is not acceptable where protective relaying or other critical channels are involved.

The remanent voltage of a three-winding NT is the product of primary exciting current and the sum of the primary winding resistance plus total external primary circuit impedance.

Copyright © 2001 IEEE. All rights reserved.
Copyright The Institute of Electrical and Electronics Engineers, Inc.
Provided by IHS under license with IEEE
No reproduction or networking permitted without license from IHS
Not for Resale

The remanent voltage of each conductor of a two-winding neutralizing reactor is the product of its exciting current and the sum of its winding resistance and the total external exciting circuit impedance (refer to Figure A.6 and Figure A.7).

If the applied ground potential rise is too great, particularly with transient voltage considerations, the accumulated volt–time area may be sufficient to drive the NT or reactor into the saturation region. (The saturation region may be defined as that section of the operating characteristics of the NT or reactor that is above the so-called 10/50 point in Figure A.8, where incremental changes in the input voltage result in reduced incremental increases in the output voltage). In this region, primary winding reactance decreases, and primary excitation current and remanent voltage thereby increase.

A.5.1.5 Flux, remanent flux, and exciting current

The flux linkage present in the NT or reactor is equal to the volt–time area contained under the applied voltage waveform and is measured in volt-seconds or weber turns [1 V·s (volt-second) = 1 Wbt (Weber turn)]. The flux in the NT or reactor core is determined by dividing the flux linkage by the number of primary turns. Total core flux is the vector sum of the flux resulting from the applied voltage and any residual or remanent flux.

Sudden removal of a voltage may leave the core biased or set at some small level of remanent flux. The remanent flux, if any, may either add to or subtract from the flux resulting from an applied fault voltage, depending upon polarity. When the flux adds, there might be a reduction in the capability of the transformer to sustain the volt–time area under the newly applied voltage waveform. Conversely, greater volt–time area capability results when the remanent flux subtracts. Thus, a knowledge of the previous magnetic history is necessary to determine if the core is capable of supporting the volt–time area produced by an anticipated fault voltage. In the absence of this knowledge, and for worst-case assumptions, this practice assumes that the total flux is the sum of the remanence and flux resulting from an applied voltage. If less than worst-case conditions are assumed, remanent flux is usually neglected.

The remanent flux may be reduced to almost zero by the introduction of a series of small air gap(s) into the core structure of the NT or reactor, resulting in an increased exciting current for a given core, unless some compensation has been provided such as increased core area. More recent designs usually use a gapped core structure or increased core area, or both, to effect a compromise between remanent flux and excitation current. The relationship between exciting current, flux linkage, and remanent flux is:

$$i(t) = \frac{1}{L_{\mathrm{PRI}}}[\phi(t) + \phi_{\mathrm{REM}}]$$

where

ϕ_{REM} = the volt-second equivalent of the remanent flux,

$\phi(t)$ = the flux linkage resulting from the applied voltage (see [B7]).

The volt-second equivalent of ϕ_{REM} may be obtained by dividing ϕ_{REM} by the number of primary turns.

A.5.1.6 Saturation

Operation of the neutralizing transformer in the saturation region of the core steel occurs when the flux density or flux per unit core area becomes greater than that which the core material is capable of

Copyright © 2001 IEEE. All rights reserved.

Copyright The Institute of Electrical and Electronics Engineers, Inc.
Provided by IHS under license with IEEE
No reproduction or networking permitted without license from IHS
Not for Resale

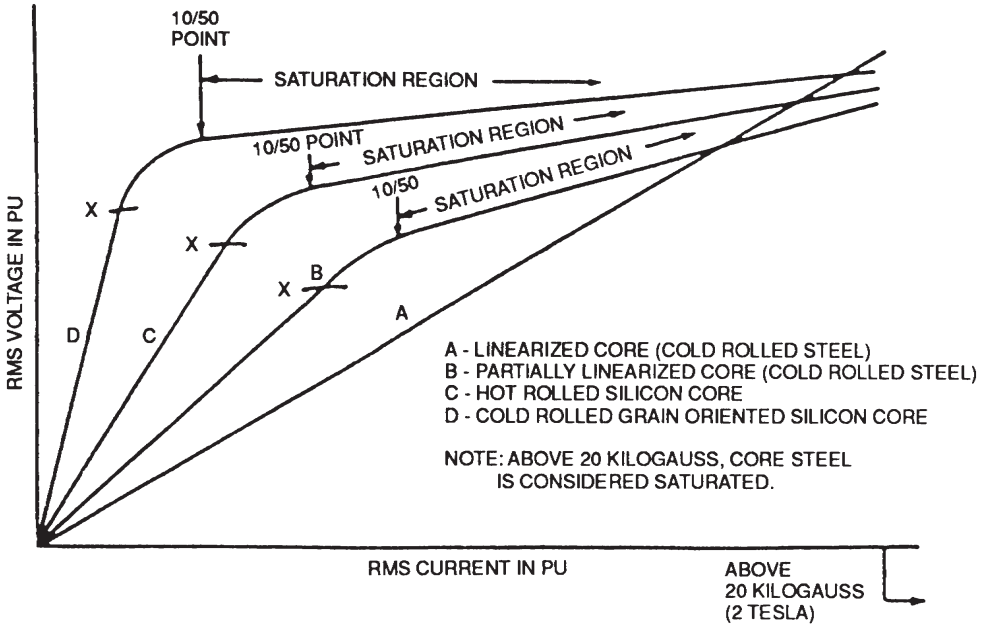

Figure A.8—Straight line approximation to a saturation characteristic for typical neutralizing transformers or reactors

NOTE—X is the point of maximum permeability of the core steel. 10/50 means the point at which, for a 10% increase in exciting voltage, the exciting current will increase by no more than 50%.

supporting. The transition between normal and saturation regions is not a precisely defined point on the excitation characteristic, but is rather a region in which exciting current and remanent voltage begin to increase more rapidly with the accumulation of volt–time area and applied voltage. A neutralizing transformer or reactor may be driven partially or even well into the saturation region by the applied voltage; however, the resulting increase in exciting current may still be insufficient to produce excessive remanent voltage. On the other hand, if excessive remanent voltage is produced, protector blocks, if used, may operate on the secondary telecommunication conductors. If blocks operate, primary and secondary windings effectively are placed in parallel, and the transformer impedance is reduced to the parallel combination of primary and secondary winding resistances in series with the reactance of a single winding. When completely saturated, a condition not encountered in practice, the permeability of the core is effectively that of air, and the inductive reactance is reduced by several orders of magnitude from the maximum inductive reactance. For example, a typical three-winding NT that has a primary impedance of 16 kΩ at rated voltage could have a net impedance as low as 0.5 Ω when completely saturated. Figure A.8 shows the saturation characteristics for two types of core steel frequently used for NTs. Common practice is to design a neutralizing transformer or reactor to operate at the point on the saturation curve that equates to the maximum permeability of the core steel. This allows for an overvoltage condition of at least 25% without going beyond the 10/50 point. Therefore, the neutralizing transformer or reactor does not enter the region of core steel saturation for such an overvoltage or a degree of dc offset.

A.5.1.7 Recovery

When a transformer operates well into the saturation region, there must be a recovery mechanism or the transformer will continue to operate in the saturated region until the applied voltage is removed. Circuit losses provide the recovery mechanism by absorbing volt-seconds. Such losses are copper losses, primary winding and external circuit resistance, and core losses. The losses generally are small,

Copyright © 2001 IEEE. All rights reserved.
Copyright The Institute of Electrical and Electronics Engineers, Inc.
Provided by IHS under license with IEEE
No reproduction or networking permitted without license from IHS
Not for Resale

and reduction of the volt–time area may take a number of cycles before the transformer no longer is operating in the saturated region and protector block operations (if used) on telecommunication conductors cease. Neglecting core losses, the net flux linkage applied to the neutralizing transformer or reactor, Vs_{NET}, may be represented mathematically as

$$V_{S_{\mathrm{NET}}} \left(\int_0^t V_{\mathrm{GPR}} \right)(t)\, dt + \phi_{\mathrm{REM}} - \int_0^t Ri(t)\, dt$$

where

$V_{\mathrm{GPR}}(t)$ = voltage applied to the transformer exciting circuit,

$i(t)$ = transformer exciting current,

R = total exciting winding and external circuit resistance ($R_{\mathrm{p}}+R_{\mathrm{ext}}+R_{\mathrm{g}}$) (see [B7]).

After a number of cycles, Vs_{NET} becomes constant for each cycle, and the transformer recovers. If the nature of the applied voltage is such that the resulting net flux density is continually greater than the capability of the transformer core, the transformer will not recover.

A.5.1.8 Worst case considerations—volt-seconds and the applied voltage

A transformer designed to steady-state specifications would be required to support the volt–time area under a quarter of a cycle of the applied ac voltage waveform. Assuming for simplicity that $R_{\mathrm{s}} = 0$ and $L_{\mathrm{s}} = 0$, this is equal to $|V_{\mathrm{pk}}/\omega|$ V·s or 3.75 V·s/1000 V rms of the applied waveform. When considering a fault voltage that is symmetrical about the zero axis, such as a longitudinally induced voltage or symmetrical GPR, the transformer might, as the worst case, be required to sustain the volt–time area under a half cycle of the applied voltage or $|2(V_{\mathrm{pk}}/\omega)|$.

If the GPR is nonsymmetrical (see Annex E), then, under the worst-case assumptions of large X/R and initial voltage phase angle approaching zero, it has been shown (see [B7]) that a good approximation to the theoretical maximum value of volt–time area that the transformer might be required to support is

$$Vs_{\mathrm{MAX}} = \frac{V_{\mathrm{pk}}}{\omega}\left(1 + \frac{X}{R}\right)$$

Figure A.9 is a plot of this expression and indicates the asymptotic value of volt–time area, i.e., the accumulated volt–time area that results if sufficient time has elapsed to permit the transient component of the GPR to decay to zero. The curve does not intersect the steady-state value at $X/R = 0$ because the NT must be sized to accommodate $2(V_{\mathrm{pk}}/\omega)$ for a half cycle of volt–time area. Figure A.9 is based upon the unusual condition of the fault occurring so as to produce maximum initial value of the transient component. If the values of α and θ are such that $\sin(\alpha - \theta)$ approaches zero, then the initial value of the transient term also approaches zero, and the dc offset is minimal.

In this case, for a large value of X/R, α must approach $\pi/2$ rad, which is the case for faults due to dielectric breakdown on peaks of the power line voltage. Figure A.10 shows, for various X/R ratios, volt–time area, as a function of initial phase angle, a, normalized to steady-state conditions. This figure may be used to determine a reduction factor to apply to the maximum accumulated volt–time area per 1000 V rms GPR of Figure A.9 for a given X/R ratio and initial phase angle. Since the phase angle at which a power fault initiates is generally unknown (although it is known that faults are initiated at close to V_{pk}), basing volt–time area requirements on other than a phase angle to produce maximum volt-seconds may result, as a calculated risk, in telecommunications service disruption and personnel

Copyright © 2001 IEEE. All rights reserved.

Copyright The Institute of Electrical and Electronics Engineers, Inc.
Provided by IHS under license with IEEE
No reproduction or networking permitted without license from IHS
Not for Resale

hazard (in leased facilities) during faults. Figure A.10 also shows that, for larger X/R ratios, flux values greatly exceeding steady-state levels are encountered as one moves away from the most favorable phase angle of 90°.

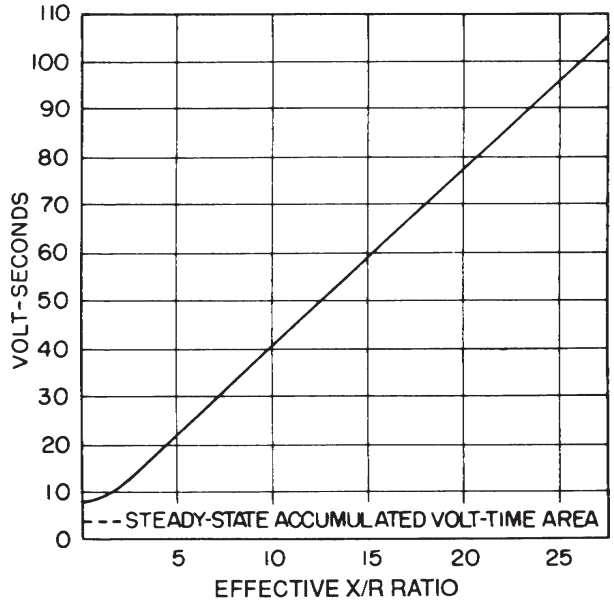

Figure A.9—Maximum worst case accumulated volt-seconds per 1000 V rms GPR as a function of the *X/R* ratio of the power system

A.5.1.9 Polarization of the neutralizing transformer or reactor core

A direct current applied to one or more NT windings in the same direction (i.e., not on a loop basis) may bias or polarize the core at a flux level that is proportional to the current magnitude. The net flux is the vector sum of the flux produced by the direct current and the additional flux resulting from an applied GPR or induced voltage, or both. The flux ϕ produced by the direct current may be determined as

$$\phi = \frac{NI\mu a}{l} \text{webers}$$

where

N = number of turns,

I = direct current in amperes,

μ, a, and l = core permeability, area, and mean length, respectively.

The capability of the transformer or reactor core to sustain the volt–time area under an applied GPR waveform may be reduced by this amount and, if significant, should be considered when determining the net flux to which the core will be subjected.

A.5.1.10 Reduction of volt–time requirements from worst case

The volt–time area that an NT or reactor will be required to sustain can be reduced significantly from the maximum for larger X/R ratios if signaling is accomplished rapidly, the assumed value of dc offset

Copyright © 2001 IEEE. All rights reserved.
Copyright The Institute of Electrical and Electronics Engineers, Inc.
Provided by IHS under license with IEEE
No reproduction or networking permitted without license from IHS
Not for Resale

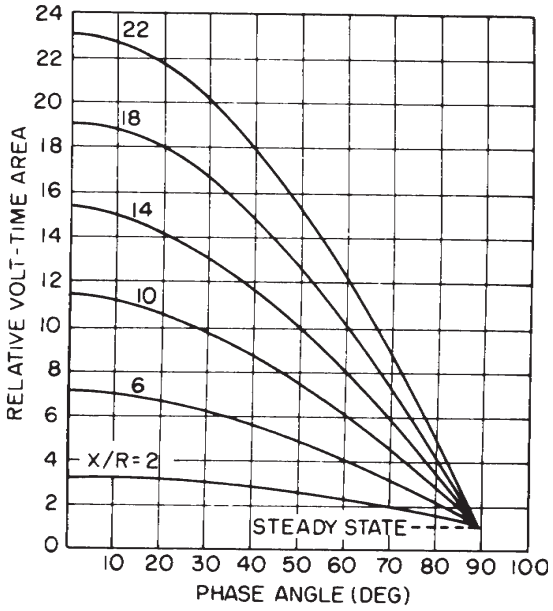

Figure A.10—Relative volt–time area (asymptotic value) for various *X/R* ratios as a function of power line voltage phase angle at initiation of fault

is low, and the power circuit is de-energized before sufficient volt-seconds have accumulated to drive the NT or reactor core well into the saturation region.

When this approach is taken, higher remanent voltages, which may be hazardous to personnel, could exist on the telecommunications facilities, but only if the circuit breakers do not operate as expected to re-energize the fault. The possible effects of this condition must be evaluated. Figure A.11 shows the relationship between accumulated V·s/1000 V rms GPR and the number of cycles from fault initiation for various X/R ratios. The particular shape of the family of curves of Figure A.11 results from the fact that the volt–time area is a sine wave superimposed upon a monotonic term. The sinusoidal term alternately adds to and subtracts from the monotonic term during each cycle. The NT or reactor is required to sustain the peak volt–time area that occurs during each cycle of the sinusoidal component. The negative portion of the sinusoidal volt–time area component during each cycle has been eliminated from Figure A.11.

A.5.1.11 Paralleling neutralizing transformers or reactors

When NTs are used in parallel, assuming that the *R* component of the NT exciting circuit remains the same (e.g., no increase in the number of exciting pairs), the rating of the protection installation is determined by the unit with the lowest volt–time area capability. Therefore, paralleled NTs should have, as near as possible, the same flux rating and remanent flux characteristic. For a given level of GPR and NT type (for example, electrical characteristics), the total exciting current and remanent voltage are directly proportional to the number of paralleled units. Paralleling NTs increases remanent voltage or, for a given remanent voltage, decreases the number of volt-seconds that may be applied to obtain a predetermined current and remanent voltage. To maintain remanent voltage within acceptable limits, NTs of greater volt–time capability may be required, or the gauge or wire size of the primary conductor to remote ground should be increased. The number of units that can be paralleled practicably should be determined on the basis of remanent voltage, NT volt-second capability, external impedance, and primary conductor size.

Copyright © 2001 IEEE. All rights reserved.

Copyright The Institute of Electrical and Electronics Engineers, Inc.
Provided by IHS under license with IEEE
No reproduction or networking permitted without license from IHS
Not for Resale

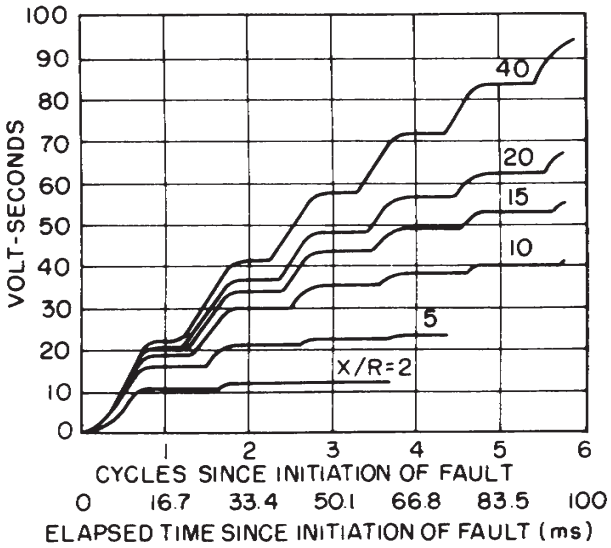

Figure A.11—Worst case accumulated volt-seconds per 1000 V rms GPR as a function of *X/R* ratio and elapsed time since fault initiation

A.5.2 Neutralizing transformer and reactor concept—Design alternatives

A.5.2.1 Preliminary considerations

A number of questions should be posed prior to choosing an NT or reactor for a particular installation.

a) Is the service to be protected critical or non-critical (that is, interruptible or non-interruptible) to the reliability of the power system?

b) Will the services to be protected by this unit be contained in the same telecommunications cable with other critical services?

c) Is continuity of the service throughout the fault interval a requirement?

d) Will carbon protector blocks be used; and if they are, will protector block operation on the telecommunications pair being protected interrupt service?

For critical, low-level signal circuits (i.e., audio-tone) the NT or reactor should not be driven to the point of excessive remanent voltage, and the relative merits of a protection device that provides longitudinal (common mode) isolation versus increased NT or reactor capability should be considered. Alternatives might be an isolation transformer, an isolation transformer in tandem with an NT or reactor, a high-voltage relay, a wire-line carrier system, an optical isolation system, or any other reliable and applicable isolation technique (see A.5.4).

There is a divided opinion regarding the merits of each of the following design alternatives. This practice recommends that the users should carefully weigh each of the following design approaches and select the approach that is most suitable for their needs. In the case of leased telephone facilities serving an electric supply location, the mutually satisfactory agreement concept is stressed.

A.5.2.2 Standardized design method

Neutralizing transformers of various sizes have generally been standardized for telephone companies. Standard design specifications have been prepared for 2.0, 2.5, 3.0, 4.5, 6, 7.5, 9.0, and 12 kV

Copyright © 2001 IEEE. All rights reserved.
Copyright The Institute of Electrical and Electronics Engineers, Inc.
Provided by IHS under license with IEEE
No reproduction or networking permitted without license from IHS
Not for Resale

neutralizing transformers. The voltage rating of neutralizing reactors is usually limited to 4.0 kV. These specifications mainly have been based on a V_{rem} requirement of 150 V at an R_{ext} of up to 35 Ω at nominal voltage rating. Also, the transformers are designed to operate at nominal voltage between the point of maximum permeability and the 10/50 point, which is at the knee of the saturation curve. Their maximum permissible voltage rating is 150% of the nominal voltage and is based on their thermal or dielectric withstand capabilities. The protection design engineer must select a standard neutralizing transformer with a nominal voltage that equals or exceeds the calculated impressed voltage. The nominal voltage is that point on the saturation curve at which the exciting current will result in a maximum of 100% of the design value of remanent voltage. Typical saturation curves for standardized neutralizing transformers or reactors are shown in Figure A.12.

In this design method, the external resistance permissible is calculated to meet the remanent voltage limitation, and the external circuit is designed accordingly. Examples of both a custom and standardized alternative design are included in A.5.2.3 and A.5.2.4.

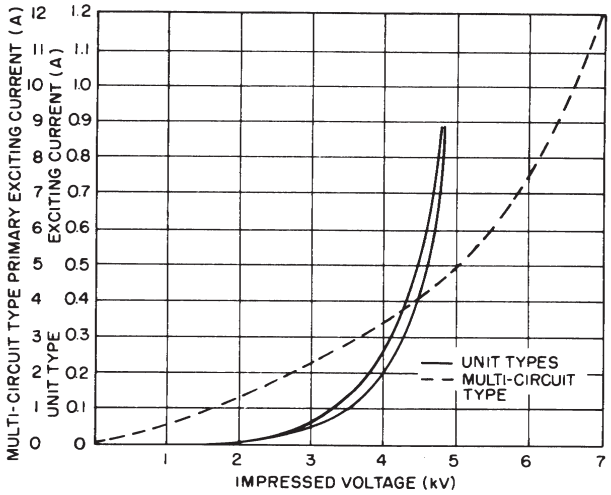

Figure A.12—Typical excitation characteristics

A.5.2.3 Custom design method

Most electric power companies order transformers to fit a specific application. Transformers are designed to meet an impressed voltage, whatever external ground resistance can be achieved, and a remanent voltage objective, which may vary depending upon the application.

One common example that may occur would be a generating station separated from its switchyard by some distance, with circuit breaker control, protective relaying, and telecommunication wiring linking them. In this case, it may be both feasible and economical to provide a very low R_{ext}, possibly 1 Ω or less. For such a situation, it is possible to drive a transformer much harder and still meet the same remanent voltage objective than if R_{ext} were, for example, 35 Ω.

A.5.2.4 Alternative simplified design

NT or reactor ratings derived from the worst case or number of good cycles design methods are intended to meet a 100% telecommunications reliability objective. An alternative simplified method of determining ratings for transformers has been used for many years by both power and telephone

Copyright © 2001 IEEE. All rights reserved.

Copyright The Institute of Electrical and Electronics Engineers, Inc.
Provided by IHS under license with IEEE
No reproduction or networking permitted without license from IHS
Not for Resale

companies. It is based upon the following two factors:

a) Remanent voltage should be maintained at or below a given objective. Historically, for many telephone companies, this has been 150 V rms, which ensures that, under fault conditions, 3 mil carbon protector blocks will not fire. Power utilities often allow up to 600 V rms for their own facilities.

b) The transformer should be designed to meet some maximum external ground resistance. Historically, in the telephone industry, this has been 35 Ω, whereas, in the power utility industry, this has been as low as 2 Ω.

From the basic formula

$$V_{REM} = i(R_p + R_{EXT} + R_g)$$

It can be seen that, for a given remanent voltage, a transformer can be driven harder (that is, greater exciting current permissible) if a low external resistance can be realized.

Alternatively, if it is not feasible or economical to obtain a low external resistance, then a lower exciting current is required to meet the remanent voltage objective. This can be achieved only by:

a) Increasing the number of turns in the transformer and R_p

b) Increasing the core area

c) Changing the grade of the core steel

The first step in this design procedure is to determine the impressed voltage, which is determined by multiplying the maximum symmetrical GPR by a factor varying generally between 1 and 1.2. A factor of as high as 1.5 has sometimes been used by utilities to account for asymmetrical fault flux requirements when critical circuits are involved. Once the impressed voltage is determined, procedures differ somewhat, depending upon whether the transformer is to be custom designed or whether a standardized transformer is to be used.

A.5.2.5 Number of good cycles approach

An alternative approach that can result in significant savings in transformer flux requirements is the number of good cycles method. When using this approach, the transformer needs only sufficient flux capability to sustain the volt–time area encountered for a stated offset GPR (phase angle at fault initiation) for the number of cycles necessary for signaling to be completed. The transformer may be permitted to enter the saturation region after the expiration of the number of good cycles, even if there are critical services involved.

When the number of good cycles approach is used, the following facts must be taken into account:

a) Voltages hazardous to personnel and plant may exist upon the telecommunications facilities if the number of good cycles has elapsed and prior to the instant of actual fault clearing.

b) Extensive use of time overcurrent relaying for ground faults, where tripping times are inversely proportional to the magnitude of the fault current, makes it very difficult to predict the number of good cycles needed.

c) Transformer breaker failure or bus backup relaying can have tripping times extending to 2 or 3 s on some classes of line, such as low-voltage distribution feeders; however, NTs are usually not required in these cases.

Copyright © 2001 IEEE. All rights reserved.
Copyright The Institute of Electrical and Electronics Engineers, Inc.
Provided by IHS under license with IEEE
No reproduction or networking permitted without license from IHS
Not for Resale

d) There may be one to three automatic reclosures into an uncleared fault with dead times between reclosures of 15 to 25 cycles up to 45 s. The recovery time of a neutralizing transformer is related to its primary circuit time constant and the magnitude of its exciting current and will be in the lower range of these dead times.

Complex protective relay systems could require the number of good cycles to be extended out to 3–45 s or longer. Normally, complex power system protection schemes operate at high speed, and the extended periods are not usually applicable. Similarly, slow backup protection schemes may not use telecommunication media. Consult the utility protective relay engineer for advice on timing coordination.

Design examples using the volt-second approach are included in A.5.6.1 and A.5.6.2.

A.5.2.6 Worst-case design considerations

Designing an NT installation from a worst-case approach is based upon choosing a transformer with sufficient flux capability to sustain the entire volt–time area accumulated under the applied voltage waveform. Worst-case designs are practicable when the combination of GPR voltage and X/R ratios provides NT volt-second requirements resulting in a transformer that is obtainable at a reasonable cost.

A.5.2.7 Considerations for other than worst-case design

Neutralizing transformers, if not suitably specified or designed, can be overdriven, resulting in excessive remanent voltage due to high transient offset component of fault currents, particularly with the assumption of worst-case conditions. However, little statistical data is available on the characteristics of fault current waveforms actually occurring in practice. This limited data does not necessarily preclude the design of a transformer installation from a worst-case approach. It does indicate, however, that a less stringent approach can be used if one is willing to accept that, on very rare occasions, factors may combine to overdrive the transformer, resulting in possible signal loss, interference to the telecommunications channel, and remanent voltage that is possibly hazardous to personnel.

If the objective is 100% telecommunications reliability, a transformer rating can be derived by using maximum fault current, maximum X/R ratios, and maximum transient fault currents to give a maximum desired remanent voltage. To establish transformer capability ratings resulting in less than 100% telecommunications reliability, and taking into account economic considerations, more statistical information is needed on fault waveforms.

One limited study conducted at several 230 kV stations showed that in no case was any degree of saturation evident nor was the full capability utilized for transformers rated on the basis of maximum symmetrical primary voltage. Offsets ranged up to 60% of the peak value of the GPR, but most were between 10% and 30%. The majority of the fault current offsets were in the order of 10% of the maximum calculated projected values. Only one case approached full capability (symmetrical rating) evaluated on the basis of volt-seconds produced by both ac and transient components of the voltage. Measurements were selected from only those station oscillograms that showed any evidence of significant dc offset and covered a span of one year's duration. Magnitude results are conservative for the 230 kV lines involved as the bank total neutral current was recorded. This is the station's contribution to the total fault current and would be reduced by the sky wire return current and contribution from the remainder of the system. The neutralizing transformer was assumed to be designed on a per unit basis of 3.75 V·s/kV rms equated to 100% capability. Further studies could be

Copyright © 2001 IEEE. All rights reserved.

Copyright The Institute of Electrical and Electronics Engineers, Inc.
Provided by IHS under license with IEEE
No reproduction or networking permitted without license from IHS
Not for Resale

required to establish telecommunications reliability factors that are related to the choice of NT capability in any particular case.

Extensive use has shown satisfactory transformer performance based on symmetrical values and a simple multiplication factor varying from 1 to 1.3 to accommodate dc offset. An appreciable number of power utilities do not, as a result of many years' experience, use any multiplication factors whatsoever. Such satisfactory performance is attributed to conservative power system design procedures and the unlikelihood that worst-case conditions will occur. Satisfactory transformer performance can be attributed to the following:

a) Electric supply location ground grid systems, particularly for higher voltage locations, sometimes are based on an objective ground rise of 3 kV, with a maximum of 5 kV. These can be conservative due to the use of maximum fault currents, return paths not considered (water pipes, neutrals, etc.), and calculated ground resistance.

b) Methods of calculating system short-circuit currents employ highest operating voltages, neglect resistance components (fault or arc, station ground, etc.), and consider maximum system conditions. Where faults are close to generating plants, the initial short-circuit current decay will probably be quite rapid during the first few cycles. The chance of the actual fault occurring at the point in the system to give maximum calculated values is small.

c) Determination of the system effective X/R ratio also is considered conservative. Generally, the exponentially decaying terms of multiple current sources are not evaluated. Although X/R ratios at generation stations can be high (75), with transformers (40) the magnitudes drop off quickly along the transmission lines (10). These values can be reduced substantially when fault resistance is considered.

d) From the oscillogram study reported, the least advantageous point on the voltage wave was approximately 55°. Automatic oscillograph records on actual faults show very few faults starting at more than 45° from voltage maximum. Studies show that flashovers due to lightning discharges or conductors swinging together normally occur near maximum voltage. The significance to the relative volt–time area required for the neutralizing transformer rating is evident in Figure A.11.

e) The usual assumption is that the station ground impedance is resistive. If a large part of the station ground return path is formed by overhead conductors (sky wires), where the fault is far out on the transmission line, there will be a reactive component that will reduce the ground rise offset component. This will not be the case for a bus or near-in (first tower out) fault.

f) Transmission line protective relay schemes that use telecommunications clear line faults within eight cycles 85–95% of the time. Ground fault back-up protection is provided by time overcurrent relays where the operating time of the relay is inversely proportional to the magnitude of the fault current. Back-up clearing time for these transmission lines can take up to 2 s or so for faults of lower current magnitudes. Distribution feeder faults are cleared by time overcurrent relays. Typical feeder fault clearing time is within 1 s with back-up clearing times of 2–3 s.

A good design approach would use realistic probabilities and would design to an acceptable functional failure rate, including economic and personnel safety considerations.

Usually, relay terminal equipment has dielectric withstand capabilities that are from 3 kV upwards (remote trip, pilot wire). For audio-tone installations, supplementary protection sometimes is provided by isolating transformers having dielectric withstand in the 2–2.5 kV range. In such cases, protectors are often omitted, and the tolerable remanent voltage may be increased, if this is acceptable to the power utility or to the telecommunications utility (in the case of leased facilities).

Copyright © 2001 IEEE. All rights reserved.
Copyright The Institute of Electrical and Electronics Engineers, Inc.
Provided by IHS under license with IEEE
No reproduction or networking permitted without license from IHS
Not for Resale

A.5.3 Typical specifications for neutralizing transformers

A.5.3.1 Introduction

The intent of design requirements is to ensure that the voltage applied to the primary is faithfully reproduced in magnitude and phase in the secondary windings. The numerical values specified in this annex apply to typical transformers. When special requirements are necessary, they apply to one or more of the following characteristics: rated voltage, rated flux capability, remanent voltage, external primary resistance, and rated primary exciting current. Typical voltage ratings for neutralizing transformers usually are in the range of 1.5–12 kV rms (in 1.5 kV increments), although higher voltage ratings are available. Transformers are available having from one to several hundred secondary pairs.

A.5.3.2 Rated voltage

The rated voltage is defined as the rms design value of 60 Hz, symmetrical voltage, expressed in kilovolts that will be applied to the transformer primary when the transformer is in service. This value is used to select the surge arrester rating and forms the basis of insulation test voltages.

A.5.3.3 Remanent voltage

The remanent voltage is defined as the product of the primary exciting current and the total primary circuit resistance (impedance) and does not usually exceed 150 V rms for most leased telephone applications. Some power and telephone utilities either accept higher or require lower values. A design value commonly used by telephone companies for the external primary resistance is 35 Ω, whereas power utilities commonly use a wide range of values.

A.5.3.4 Rated primary exciting current

The rated primary exciting current is defined as the maximum rms current at rated voltage.

A.5.3.5 Rated flux capability

Under fault conditions, transformers are subjected to both symmetrical and transient voltages for some period of time. The required flux capability is usually expressed on an rms basis that includes transient requirements.

For typical transformers, the minimum flux capability is 3.75 V·s/kV rms of rated voltage. This value corresponds to the steady state flux requirement when rated voltage is applied to the transformer primary and the rated primary exciting current is flowing.

Special transformers with higher flux capabilities may sometimes be required, and, in these instances, the volt-second requirement should be stipulated. The rated flux capability is then defined as the time integral of the applied primary voltage waveform. The limits of integration shall be from the time of application to the time at which the primary exciting current reaches the specified rated value. Sometimes it is acceptable to allow the transformer exciting current to go into the saturation region after a number of cycles of the power system frequency has elapsed. Transformers with lower flux capabilities are then specified, and, in that instance, the time to saturation, in terms of the number of

Copyright © 2001 IEEE. All rights reserved.

Copyright The Institute of Electrical and Electronics Engineers, Inc.
Provided by IHS under license with IEEE
No reproduction or networking permitted without license from IHS
Not for Resale

good cycles, as well as the volt-second or flux capability should be stipulated. The volt-second rating is based on an assumed initial condition of zero flux in the core at the time of fault initiation.

A.5.3.6 Exciting current characteristic

For typical standardized transformers, the primary exciting current is usually stated not to exceed the maximum value given in Figure A.13, for the stated percentage of rated voltage. For each special transformer with higher flux capability, a magnetization curve plotting flux (expressed in volt-seconds) from zero to 150% of rated flux capability versus rms exciting current should be detailed.

A.5.3.7 Leakage inductance

The leakage inductance between primary and secondary windings should not exceed 2% and preferably not 1% of the primary winding inductance under a maximum excitation of 125% of rated voltage.

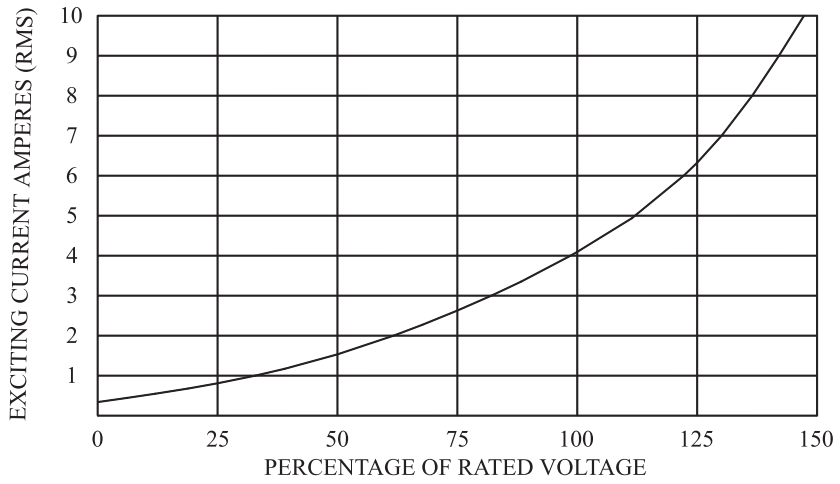

Figure A.13—Typical maximum exciting current versus percentage of rated voltage at 60 Hz

A.5.3.8 Overvoltage capability

All transformers should be capable of withstanding continuous excitation at 150% of rated voltage without dielectric or thermal damage. A transformer may be applied anywhere within its maximum voltage or flux capability rating, or both, provided that the resulting primary current and circuit resistance result in the given maximum remanent voltage objectives and that the dielectric and thermal capabilities of the transformer are not exceeded.

A.5.3.9 Mutual capacitance

The average mutual capacitance for No. 22 AWG gauge conductors is typically 52 pF/km. Where necessary, the maximum value of mutual capacitance should be stipulated in the requirement specification.

Copyright © 2001 IEEE. All rights reserved.
Copyright The Institute of Electrical and Electronics Engineers, Inc.
Provided by IHS under license with IEEE
No reproduction or networking permitted without license from IHS
Not for Resale

A.5.3.10 Capacitance unbalance

In every length of cable within the transformer, the 1000 ± 100 Hz average capacitance unbalance between adjacent pairs in the same unit should not exceed 74 pF/km.

A.5.3.11 Resistance unbalance

The resistance unbalance of any pair should be as low as possible, consistent with normal manufacturing practices. The average resistance unbalance of the cable length used in the transformer should not exceed 1.5%.

A.5.3.12 Secondary loop resistance

The loop resistance for standard transformers with No. 22 AWG gauge conductors typically should not exceed the following:

Rated voltage	Loop resistance
4500 V	80 Ω
9000 V	100 Ω

For special transformers, the secondary loop resistance requirement should be stipulated.

A.5.3.13 Secondary conductor cable length

The active length of secondary cable pairs should be furnished for the purchaser's information in order that he or she may consider any required loading coils in the overall transmission path.

A.5.3.14 Insertion loss

The typical insertion loss as measured between 600 Ω resistive terminations should not exceed 1.5 dB from 17 Hz to 3400 Hz.

A.5.3.15 Frequency response

Typically, the frequency response should be flat within ± 0.5 dB over the range of 17 Hz to 3400 Hz, as measured between 600 Ω resistive terminations.

A.5.3.16 Type and production insulation tests

Type acceptance testing should be performed for each transformer design. Routine production testing should be performed as per users' requirements. For the impulse test, the wave shape of the impulse wave should be 1.5 to 12×40 to 60 μs; for example, the front of the wave may vary from 1.5 μs to 12 μs rise time. The wave tail may vary from 40 μs to 60 μs at half value. The amplitude of the full impulse waveform should be at least 120% of the impulse sparkover voltage of an associated primary surge arrester. Routine production insulation tests using dc test voltages should be applied

Copyright © 2001 IEEE. All rights reserved.

Copyright The Institute of Electrical and Electronics Engineers, Inc.
Provided by IHS under license with IEEE
No reproduction or networking permitted without license from IHS
Not for Resale

for 3 s as follows:

a) Between all winding terminals and ground and between all secondaries connected in parallel with the primary grounded: test voltage should be equivalent to 1.4 times (twice the rated voltage rms plus 1 kV rms).

b) Between all secondary conductors: 2 kV dc for No. 22 AWG for protecting paper/pulp cable and 4 kV when protecting polyethylene-insulated conductor (PIC) cable.

NOTE—Higher test voltages may be necessary to ensure that the dielectric withstand capability of the secondary conductors exceeds that of the connecting cables.

A.5.3.17 Surge (lightning) arrester tests

Gapless metal oxide type arresters should be given a routine discharge voltage test using a discharge current of $8\times20\,\mu s$ wave shape with a crest amplitude of not less than 1500 A. All gap-type arresters should be routinely production tested using a 60 Hz withstand test voltage and should be impulse tested to ensure that they fire within the maximum stated impulse sparkover voltage.

A.5.4 Use of DC blocking or AC exciting capacitors, or both

It is frequently necessary to add additional capacitance between the signal conductors and ground for the purpose of exciting a two-winding type neutralizing transformer; and it should be understood that this exciting circuit represents a series resistance–inductance–capacitance (*RLC*) configuration. Similarly, a capacitor could be connected in series with the primary winding of the three-winding type with the object of blocking the dc transient component. This circuit also becomes a series *RLC* circuit.

In general, it is not desirable to use a dc blocking capacitor in series with the primary circuit of a three-winding type neutralizing transformer unless certain precautions are observed. Similarly, it is not desirable to use external capacitors in the excitation circuit of the two-winding type neutralizing transformer. For symmetrical faults, the remanent voltage will be increased in proportion to capacitive reactance and drastically increased if series resonance occurs near system frequency. The introduction of the capacitor can also result in circuit ringing or oscillations if the value of C is less than $4L/R^2$. These oscillations, ω_N, will result in transient secondary voltages at the natural frequency of the primary circuit:

$$\omega_N = \sqrt{\frac{R^2}{4L^2} - \frac{1}{LC}}$$

which bear no resemblance to the incident GPR waveform. Voltages that exceed the GPR and persist for long time periods, depending on circuit damping, can be produced. If the value of C is chosen to be much greater than $4L/R^2$, such that the primary circuit is highly overdamped, the capacitor then has little effect on the transient or steady-state response of the transformer. (For example, with $R = 35$ and $L = 4$, a value of approximately 0.6 F would produce a negligible effect damping ratio of approximately 7.)

The significance of the use of smaller values of capacitors connected in series to three-winding neutralizing transformer primary circuits, or connected in shunt between each of the signal conductors and ground of two-winding neutralizing reactors, is determined by the influence of the resulting voltage magnitude on the transformer core saturation or protector block operation. The voltage amplitudes produced are a function of the relative magnitudes of the R, C, and L components and the magnitude and wave shape of the applied GPR or induced voltage waveform, or both.

Copyright © 2001 IEEE. All rights reserved.
Copyright The Institute of Electrical and Electronics Engineers, Inc.
Provided by IHS under license with IEEE
No reproduction or networking permitted without license from IHS
Not for Resale

An additional constraint that must be considered when selecting the size of the capacitor is the possibility of ferroresonance, evaluated for the particular transformer exciting current characteristics. The use of capacitors as described above has resulted in some erroneous pilot-wire relay operations.

A.5.5 User information required for preparing a neutralizing transformer design specification

Various types and designs of neutralizing transformers are used to neutralize extraneous voltages, such as electric supply location GPRs or longitudinally induced voltages (or noise), or both. These appear in telecommunication cables or wires, or in certain types of power-conducting wires. Voltages may be symmetrical or asymmetrical with a large range in magnitude and a frequency range from low to high values, corresponding to very short duration transients.

An NT should be applied in terms of its exciting current characteristics, at a specified voltage, and within its maximum volt-second capability, to achieve a given remanent of unneutralized voltage. Although a standard type of NT often can be adapted for use in many cases, it may be more appropriate and economical to develop a suitable transformer design specification for a given installation. The following information will provide all the necessary data from which a specification may be written:

a) The number of signal pairs required in the NT, and their required wire gauge, if important (for example, 25 pairs, 22 gauge plus two video pairs).

b) Has power system growth been considered (for example, increased fault MVA, increased X/R ratio, communications-pair requirements)?

c) The frequency range of signal pairs (for example, 20 Hz to 4000 Hz or 10 kHz to 2.5 MHz).

d) The maximum insertion loss throughout the specified bandwidth, with signal level, source, and termination impedances to be specified (for example, 3 dB at 0 dBm, 600 Ω source, 600 Ω load).

e) The maximum permissible value of mutual capacitance of signal pairs (for example, 0.09 μF).

f) The maximum permissible value of capacitance unbalance of signal pairs (for example, 200 pF).

g) The maximum permissible dc loop resistance of the signal pairs (for example, 80 Ω loop).

h) The maximum permissible resistance unbalance of signal pairs (for example, 1.5%).

i) The maximum loop currents in signal pairs (for example, 20 pairs at 200 mA dc plus five pairs at 10 mA ac).

j) The maximum permissible pair open-circuit metallic voltage at full primary excitation (for example, 2 V).

k) The characteristic impedance of secondary pairs for specific frequency ranges (for example, 500 Ω to 700 Ω at 300 Hz to 3000 Hz).

l) Is the neutralizing transformer required for protection against electric supply location ground potential rise only or longitudinally induced voltage only, or a combination of both?

m) When the primary excitations of an NT are a combination of longitudinally induced voltage and a GPR voltage, determine the vector angle so that these voltages have been properly added to obtain total primary exciting voltage (for example, 66°).

n) Is the NT required to protect critical circuits such as protective relaying channels?

o) If the answer to question (n) is *YES*, can these circuits be interrupted momentarily during power system faults? If the answer to question (n) is *NO*, proceed with a non-critical NT design.

Copyright © 2001 IEEE. All rights reserved.

Copyright The Institute of Electrical and Electronics Engineers, Inc.
Provided by IHS under license with IEEE
No reproduction or networking permitted without license from IHS
Not for Resale

p) If the answer to question (o) is *YES*, determine the number of cycles of duration permissible for such an interruption and proceed to a design specification other than worst case.

q) If the answer to question (o) is *NO*, then proceed to a worst-case design specification or a design predicated on the number of good cycles required of the MT before it draws excessive exciting current, thus resulting in an excessive remanent voltage.

r) Will protector gaps be installed on the remote side of the NT? If *YES*, would the sparking of such gaps interfere with circuit operation? If *YES*, again, the user should reconsider the design specification.

s) What is the assumed X/R ratio of the power system, and what should be the assumed value of the dc offset to be applied to the NT design?

t) Are there any unidirectional or ground-return currents in any of the signal pairs?

u) If the answer to question (t) is *YES*, determine whether these currents are ac or dc, and note the value of current in each pair and whether they are intermittent or constant. (Note that such currents will polarize the NT core, resulting in a much larger core requirement.)

v) State the nominal or assumed rms asymmetric primary voltage and frequency (for example, 9000 V at 60 Hz, maximum GPR times derating factor). Has the assumed dc offset factor been evaluated? (Note that some users multiply the nominal rms voltage by the assumed dc offset factor to arrive at a new higher nominal transformer exciting voltage.)

w) State the maximum worst-case rms symmetric primary voltage and frequency (for example, 14 000 V at 60 Hz). Has the dc offset been considered? (Note the comment regarding the addition of dc offset in item (x).)

x) Decide whether the transformer exciting current design characteristics should be based on (v) nominal voltage or (w) maximum voltage.

NOTE—With respect to items (v) and (w) above, the worst-case GPR voltage should be determined. This voltage (w) could then be reduced by a judgment factor based upon many parameters and the experience of the user to a nominal value for transformer design specification purposes (v). The user also should determine by a judgment factor whether or not the specifications should be written from a fully-offset fault current wave point of view. Since this latter case is most unlikely, the user could reduce the dc offset requirements to a value more in keeping with experience. Generally, this dc offset value need only be 1.2 to 1.3. Then, the user will be in a position to compute an assumed transformer flux requirement (y). Reference is made to IEEE Std 367-1996 on the determining of worst-case GPR, longitudinal induction, derating factors, and channel time requirements. This will assist the user in determining a value of nominal neutralizing transformer rms exciting voltage and current.

y) State the desired total flux requirements in terms of volt-seconds, or, alternatively, apply a multiplication factor to rms values.

z) State the method of transformer excitation (for example, cable shield, cable pairs, a combination of both, or a special insulated conductor terminated at remote ground, also circuit length, i.e., cable shield plus three pairs, 22 gauge, 4800 ft).

aa) State the maximum permissible dc resistance of the NT primary (for example, 4 Ω).

bb) State the maximum permissible remanent or unneutralized voltage, rms, symmetric (for example, 150 V).

cc) State the maximum value of impedance external to transformer primary terminals (for example, 35 Ω).

dd) Obtain the maximum value of ground resistance at substation (for example, 0.5 Ω); see IEEE Std 81-1983 and IEEE Std 81.2-1991.

Copyright © 2001 IEEE. All rights reserved.
Copyright The Institute of Electrical and Electronics Engineers, Inc.
Provided by IHS under license with IEEE
No reproduction or networking permitted without license from IHS
Not for Resale

ee) Obtain the maximum value of ground resistance at telephone central office or a remote ground point (for example, 4 Ω).

ff) Has the effect of dc earth currents on NT design been considered (for example, solar-induced current, industrial rectifier loads, cathodic protection, HVDC systems, and railway traction)?

gg) Is a surge arrester required across the primary winding?

hh) Is an isolation gap required for use between the external cable shield and the remote ground terminal?

ii) Should carbon-block or gas-tube protectors be installed on either the central office (remote) side or on the substation side of the transformer secondary windings?

jj) If an additional transformer is planned for the site at some future date, has consideration been given to the total exciting current of the original and subsequent transformer to retain the original design value of remanent voltage?

A.5.6 Neutralizing transformer installation design examples

A.5.6.1 Worst-case or number of good cycles approach installation design, or both

To design a worst-case NT installation, the rms value of the GPR voltage and the X/R ratio of the power system should be accurately known. From these factors, the total volt–time area may be estimated using Figure A.9, if a worst-case design is to be used, or Figure A.11, if the number of good cycles approach is to be used.

To coordinate an NT with the volt-second requirement determined from Figure A.9 and Figure A.11, both the excitation characteristic or accumulated volt-seconds versus exciting current curve and the maximum equivalent remanence flux for the NT must be known. Figure A.14 shows such a characteristic for a transformer rated at approximately 52 V·s with negligible remanence.

Figure A.15 illustrates an NT rated at 4500 V rms (approximately 17 V·s) with approximately 50% remanence. The ordinate values for unfavorable remanence would be used for design. The primary

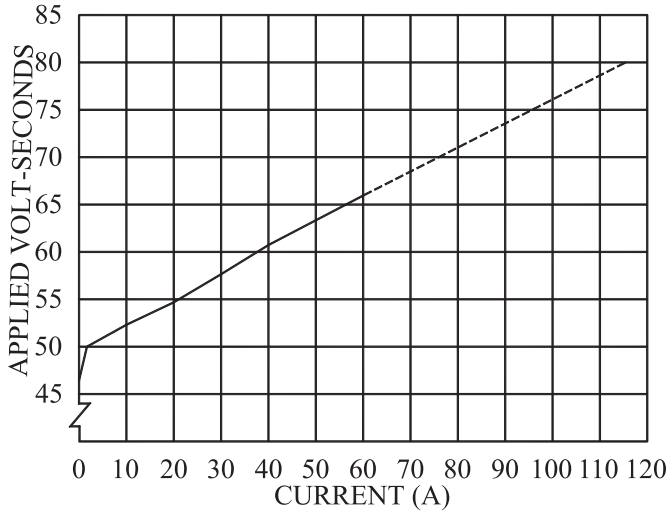

Figure A.14—A particular 52 volt-second rated transformer exciting current as a function of applied volt-seconds

Copyright © 2001 IEEE. All rights reserved.

Copyright The Institute of Electrical and Electronics Engineers, Inc.
Provided by IHS under license with IEEE
No reproduction or networking permitted without license from IHS
Not for Resale

winding resistance, resistance of primary pairs to remote ground, and remote ground resistance shown as R_p, R_{EXT}, and R_g, respectively, on Figure A.5 also must be known. Remanent voltage should remain below an acceptable level to coordinate with carbon protector blocks, gas tubes, other protective devices, or terminal equipment and cable dielectric if protective devices are not used.

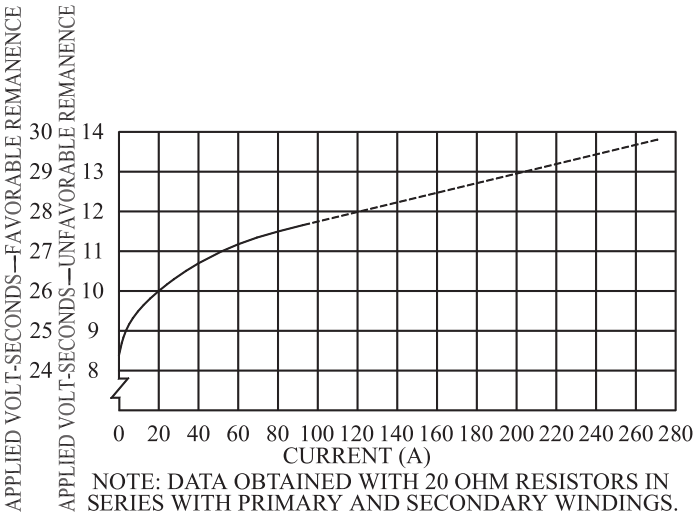

Figure A.15—A particular 4500 V rms rated transformer exciting current as a function of applied volt-seconds

Another consideration is local GPR at the location at which the NT primary conductor is grounded. This may be the backup protection location of Figure A.5. Local GPR is determined by the product of the local ground resistance, R_g, and the NT exciting current. Ground resistance or exciting current, or both, should be kept sufficiently low so that local GPR will not be sufficient to produce operation of protective devices, if used, at the backup protection location or cause cable damage due to excessive voltage stress.

The user should consider, as an example, a hypothetical electric supply location having a GPR of 3000 V rms and an X/R ratio at the point of fault of 3.

a) Referring to Figure A.9 for an X/R ratio of 3, the volt–time area is estimated to be 14V·s/1000 V rms GPR.

b) Since the station GPR is 3000 V rms, total volt–time area is $3 \times 14 = 42$ V·s.

c) An NT with characteristics as shown in Figure A.14 is chosen. Primary excitation current is approximately 0.5 A for 42 V·s applied.

d) Two 19 gauge pairs, approximately 1.6 km long, are used to obtain remote-ground (leased telephone facilities), resulting in a net conductor resistance $R_{EXT} = 10\,\Omega$, $R_p = 20\,\Omega$, and $R_g = 10\,\Omega$.

e) Remanent voltage is calculated as $V_{REM} = I_p\,(R_{EXT}+R_p+R_g) = 20$ Vpk.

f) For the circuit configuration of Figure A.5, the voltage, V_B, from conductor to ground or across protector blocks, if used at the electric supply location, is 20 Vpk.

g) Local GPR at the backup protection location is determined as $V_g = I_p R_g = 5$ Vpk. Both remanent voltage and local GPR are clearly acceptable in this example.

Copyright © 2001 IEEE. All rights reserved.
Copyright The Institute of Electrical and Electronics Engineers, Inc.
Provided by IHS under license with IEEE
No reproduction or networking permitted without license from IHS
Not for Resale

The user should now consider, for the purpose of illustration, the same physical arrangement of NT, primary conductors, backup protection location, and local ground resistance. The GPR remains at 3000 V rms, but the X/R ratio for this illustration is 4.

Referring to Figure A.9 for an X/R ratio of 4, the volt–time area is estimated to be 19 V·s/1000 V rms GPR.

Total volt–time area $= 3 \times 18 = 54$ V·s.

An NT with characteristics as shown in Figure A.14 is again chosen. Primary excitation current is 17 A for 54 V·s applied.

$$R_{EXT} = 10\,\Omega, \quad R_p = 20\,\Omega, \quad R_g = 10\,\Omega,$$

$$V_{REM} = I_p(R_{EXT} + R_p + R_g) = 680\ V_{pk},$$

$$V_B = V_{REM} = 680\ V_{pk},$$

$$V_g = I_p(R_g) = 170\ V_{pk}.$$

Remanent voltage, voltage from communication conductors to ground at the electric supply location, V_B, and local GPR at the backup protection location, V_g, have increased markedly for a small increase in X/R ratio. These voltage levels are in excess of those tolerable on leased telephone communication facilities. The solution here is to choose an NT of greater volt–time area capability to reduce excitation current. An alternative solution is to choose an NT with lower primary-winding resistance and use more pairs or a primary conductor of heavier gauge to provide remote ground, thereby lowering remanent voltage. Ground resistance at the backup protection location also should be reduced to keep local GPR within acceptable limits.

When GPRs or X/R ratios, or both, are large, it may become impossible to specify a practical NT for a protection application because the physical size to fulfill volt-second requirements would be economically prohibitive. In such situations, it may be assumed that, for most faults occurring at favorable phase angles to produce little offset, the NT will perform satisfactorily. Reductions in volt-second requirements effected by favorable phase angle may be evaluated from a combination of Figure A.10 and Figure A.11 that considers point on wave and good cycle approach. But, there will be occasional faults that occur at unfavorable phase angles, resulting in transformer saturation and possible signal loss, personnel hazard, or interference to the communications channel. The importance of this occurrence has to be evaluated considering actual fault statistics relating to point on wave and fault magnitudes. Other factors, such as frequency of the worst-case fault, economics, and equipment dielectric also must be considered. For example, with nonleased facilities, it may be the practice to eliminate protector blocks, thus permitting increased remanent voltage with satisfactory operation of all services including audio tone, provided that cable dielectric is not exceeded.

A.5.6.2 Alternative installation design approach

A.5.6.2.1 Custom design method

This design approach is used frequently by power companies to order an NT to fit a specific application. Given a known maximum symmetrical GPR, the number of pairs to be protected, the factor to be used, and the maximum remanent voltage, a specification may be submitted to the NT manufacturer.

Copyright © 2001 IEEE. All rights reserved.

Copyright The Institute of Electrical and Electronics Engineers, Inc.
Provided by IHS under license with IEEE
No reproduction or networking permitted without license from IHS
Not for Resale

The user should consider, as an example, an electric supply location with a maximum symmetrical GPR of 4.4 kV rms. There are five pairs to be protected, with a maximum remanent voltage of 500 V permitted.

A multiplication factor of 1.5 will be used.

Step 1. Determine impressed voltage: impressed voltage = 4.4×1.5 = 6.6 kV.

Step 2. Determine value of external resistance that can be achieved (including an estimate of the NT primary resistance). Use 1 Ω as an example.

Step 3. Determine, for the particular application, the point on the saturation curve at which the transformer is to be driven.

$$\text{ec} = \frac{\text{mrv}}{\text{er}} = \frac{500\,\text{V}}{1\,\Omega} = 500\,\text{A}$$

where

ec = exciting current,

mrv = maximum remanent voltage,

er = external resistance.

A transformer is ordered from the manufacturer to meet the above design criteria.

A.5.6.2.2 Standardized design method

This design approach uses one of the off-the-shelf standardized neutralizing transformers provided by a manufacturer. Given a known maximum symmetrical GPR, number of pairs to be protected, factor to be used, maximum remanent voltage, electric supply location ground resistance, and resistance to ground at the remote ground location, the maximum external resistance permissible may be calculated. The external primary circuit may be designed accordingly.

The user should consider a hypothetical electric supply location having a maximum symmetrical GPR of 4.4 kV and a electric supply location ground resistance of 0.5 Ω. The maximum remanent voltage permitted is 150 V, the resistance to ground at the remote ground location is 5 Ω, and the number of pairs to be protected is 6. A multiplication factor of 1.5 will be used.

Step 1. Selection of standard NT: impressed voltage = 4.4×1.5 = 6.6 kV. Therefore, use standard 9 kV, six-pair neutralizing transformer.

Step 2. Determine external resistance, R_{EXT}, such that remanent voltage does not exceed 150 V (see Figure A.5).

$$V_{REM} = I_p(R_{EXT}+R_p+R_g) = 150\,\text{V}$$

where

I_p = 9.7 A (from multicircuit-type excitation characteristics of Figure A.12),

R_p = 3.5 Ω (from NT specification),

Copyright © 2001 IEEE. All rights reserved.
Copyright The Institute of Electrical and Electronics Engineers, Inc.
Provided by IHS under license with IEEE
No reproduction or networking permitted without license from IHS
Not for Resale

$$R_{EXT} = \frac{150}{I_p} - (R_p + R_g)$$
$$= \frac{150}{9.7} - (3.5 + 5) \cong 7\,\Omega.$$

Step 3. Calculate the type, gauge, or number of remote-ground conductors.

Knowing that the maximum permissible resistance of the remote ground conductor(s) is 7 Ω, the type, gauge, and number of remote ground conductors can be calculated readily.

A.6 Telephone-type drainage units

A drainage unit, also called drainage reactor, mutual drainage reactor, mutual drainage transformer, mutual reactor, etc., consists of two coil windings on a single magnetic core. When the two coils are connected in series across the wires of a communication pair with the center point grounded, the drainage unit presents a high impedance to differential mode (metallic) signals on the communication pair, and a low impedance to ground for common mode (longitudinal) signals. Drainage units are designed for a wide range of drainage currents, voltages, insulation levels, and frequency and saturation characteristics. Several different types of drainage units are available for various applications. They may be specified for continuously draining currents resulting from longitudinal induction and for ensuring symmetrical protector block operation. Special units are available for low surge impedance and for low surge plus 50/60 Hz impedance applications. Continuous drainage units are made in a variety of current carrying capacities, from a few amperes up into the 50 A region. It is important that, regardless of what type of drainage unit may be selected for a specific purpose, the unit itself should have its two halves extremely well balanced inductively, capacitively, and resistively; otherwise, difficulties will be encountered in service.

There are two uses of drainage units: direct drainage, and protector drainage that forces simultaneous firing of carbon blocks. In the second type, it is important that any rise of voltage across one winding be followed by a rise of voltage in the other winding in a very short space of time, probably with a delay in the μs range. The voltage in the other winding is of opposite polarity and is approximately equal to 175% of the original disturbing voltage, resulting in almost zero time difference between firing of the two sets of carbon blocks.

A.6.1 Typical specifications for a telephone-type drainage unit

A typical specification for a telephone-class drainage unit, also designed to be used as a mutual drainage reactor associated with carbon blocks, should basically reflect the following points:

a) Drainage capacity should be equal to or greater than associated carbon blocks or gas tubes.

b) Winding resistances should be low.

c) Bridging impedance should be high.

d) Bridging loss should be low.

e) Transient and 60 Hz (including harmonics) response or surge transference capability from one half of the winding to the other should be high and fast.

f) Core steel remanence should be kept low.

g) Dielectric and BIL should be reasonably high.

Copyright © 2001 IEEE. All rights reserved.

Copyright The Institute of Electrical and Electronics Engineers, Inc.
Provided by IHS under license with IEEE
No reproduction or networking permitted without license from IHS Not for Resale

A.6.2 Typical specification for drainage unit

Table A.2—Typical specification for drainage unit

Drainage capacity	0.5 A continuous (400 A^2 s surge drainage rating) (1.2×50 μs test wave)
Winding resistance	15 Ω each winding [see Note 1]
Winding resistance unbalance	0.5% maximum
Inductance unbalance	1% maximum
Bridging impedance	100 V at 60 Hz—50 000 Ω minimum
Bridging loss	0.1 dB—20 Hz to 20 kHz
Transient response	75% of applied voltage across one half should be generated across other half within 5 μs (10×1000 μs test wave)
Longitudinal balance	80 dB per IEEE Std 455-1985 [B18]
Insulation tests	(1) DC dielectric test (a) between windings: 2 kV for 3 s (b) between windings and mounting brackets or case: 2 kV for 3 s [see Note 2] (2) BIL (1.2×50 μs test wave) (a) between windings: 5 kV (b) between windings and mounting bracket or case: 5 kV [see Note 2]

NOTES:
1—Each half of the winding should be terminated separately so that optional external connections can be achieved.
2—In certain applications, a higher dielectric withstand capability may be required.
3—Power utility applications usually require drainage units having much higher ratings.

A.7 Typical specifications for a high-voltage isolating relay

Table A.3—Typical specifications for a high-voltage isolating relay

Coil-operating currents	20–60 mA dc (24 V or 48 sV)
Contacts	SPST
Rating—maximum	50 W, 3.0 A, 1000 V breakdown
Contacts	SPDT
Rating—maximum	20 W, 1.5 A, 500 V breakdown

A.8 Isolating transformer with high-voltage isolating relay

A.8.1 Description

A transformer with split windings is incorporated in the design of the isolating transformer high-voltage relay assembly to provide connection of signaling equipment while maintaining balanced impedances. The relay coil is connected to the center taps of the electric supply location side (see Figure A.16).

In operation, an off-hook condition causes current from the locally supplied dc source to flow through the relay coil, closing the relay contacts; this, in turn, provides dc continuity in the isolated local loop to the telephone company central office actuating the switching equipment. In rotary dial applications, the relay follows dialing pulses of the local instrument, resulting in regeneration of these pulses by the relay contacts in the local loop circuit. These pulses are then transmitted to the switching equipment in the central office via the local loop.

Typical specifications are given in A.8.2.

Copyright © 2001 IEEE. All rights reserved.
Copyright The Institute of Electrical and Electronics Engineers, Inc.
Provided by IHS under license with IEEE
No reproduction or networking permitted without license from IHS
Not for Resale

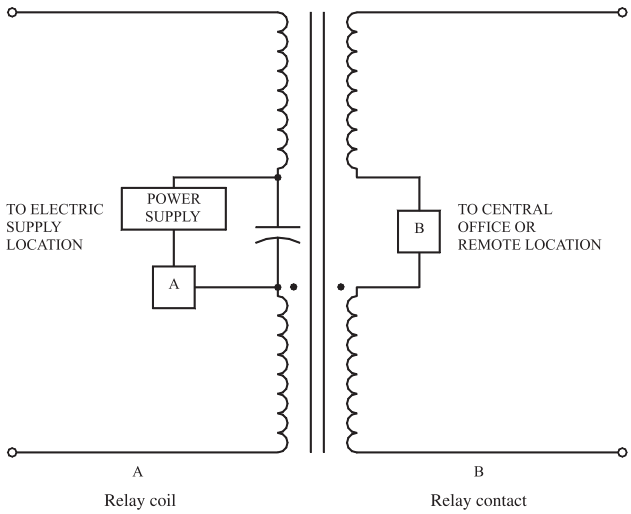

Figure A.16—Sample circuit diagram of an isolation device for telephone service

A.8.2 Typical specifications for isolating transformer and high-voltage repeating relay assembly

A.8.2.1 Requirements

Telephone service to the electric supply location is not generally required to be continuous during a power system fault. However, the following requirements do need to be satisfied.

a) *Noise*. The telephone service pair should not produce noise on adjacent pairs such that critical services are made inoperable during the disturbance.
b) *Restoration*. The telephone service should be operable immediately following a power system fault.

A.8.2.2 Protection

These requirements can be met by using an isolation transformer for protection of the circuit. A local power supply and a high-voltage relay also will be required for operation of the telephone instrument. See Figure A.16.

Table A.4—Typical specifications for isolating transformer and high-voltage repeating relay assembly

Transmission loss	300 Hz to 4000 Hz—0.5 dB maximum 20 Hz—less than 10 V drop with 500 Ω load
Impedance ratio	600 Ω to 600 Ω
Primary winding resistance	15 Ω maximum
Secondary winding resistance	20 Ω maximum
Power supply	30 mA minimum (optional noninterruptible with 8 h reserve)
Relay switching current	100 mA minimum at 10 pulses/second
Insulation test	9 kV rms—winding to winding and winding to ground
BIL	30 kV (1.2×50 μs test wave)
Ringer loading limitations	
Local loop resistance	1 kΩ 2 kΩ 3 kΩ
Number of ringers	3 2 1

Copyright © 2001 IEEE. All rights reserved.

Copyright The Institute of Electrical and Electronics Engineers, Inc.
Provided by IHS under license with IEEE
No reproduction or networking permitted without license from IHS
Not for Resale

A.9 Typical specification for optical coupler (optic coupling device)

Table A.5—Typical specification for optical coupler (optic coupling device)

Input to output breakdown voltage	25 kV
Line current rating	60 mA continuously
Phototransistor collector/emitter forward breakdown voltage	30 V minimum
Input impedance	1000 Ω balanced
Line circuit voltage	260 V maximum
Line circuit loop impedance	3000 Ω maximum

Figure A.17 is a basic schematic drawing of an optical coupler.

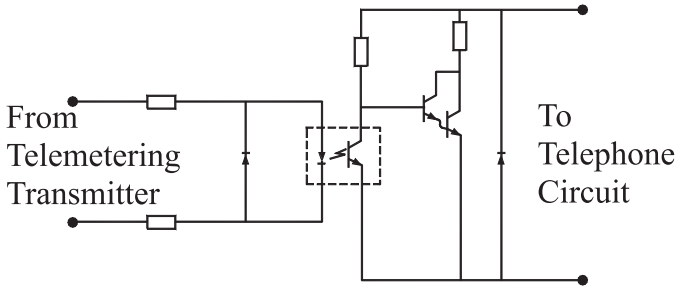

Figure A.17—The optical coupler

A.10 Typical specification for high-voltage disconnect jacks

Table A.6—Typical specification for high-voltage disconnect jacks

Number of circuits per panel	Varies by source
Protection	between line side and equipment side: 20 kV at 60 Hz between adjacent circuits within panel: 20 kV at 60 Hz at plug handle maximum leakage current: 0.5 mA at 20 kV

Figure A.18 depicts the various types of bantam plugs that are employed with high-voltage disconnect jacks.

A.11 Telecommunications cable in the electric supply location GPR zone of influence

A.11.1 General-use telecommunications cable in the electric supply location zone of influence

NOTE—The models and graph shown in the following paragraphs are for illustrative purposes only. Each illustration should be engineered to include all ground resistance customer drop (entrance wiring) impedances, as these can have a significant effect on pair and shield potentials. Conductor and shield voltage and current should be evaluated to determine possible cable damage and the need for special protective apparatus. A further consideration is the effect that current flow on the shield of the general-use cable might have on the electric supply location telecommunication services. Because shield and pair potentials can differ from that of surrounding earth in the zone of influence, safe working practices are required.

Copyright © 2001 IEEE. All rights reserved.
Copyright The Institute of Electrical and Electronics Engineers, Inc.
Provided by IHS under license with IEEE
No reproduction or networking permitted without license from IHS
Not for Resale

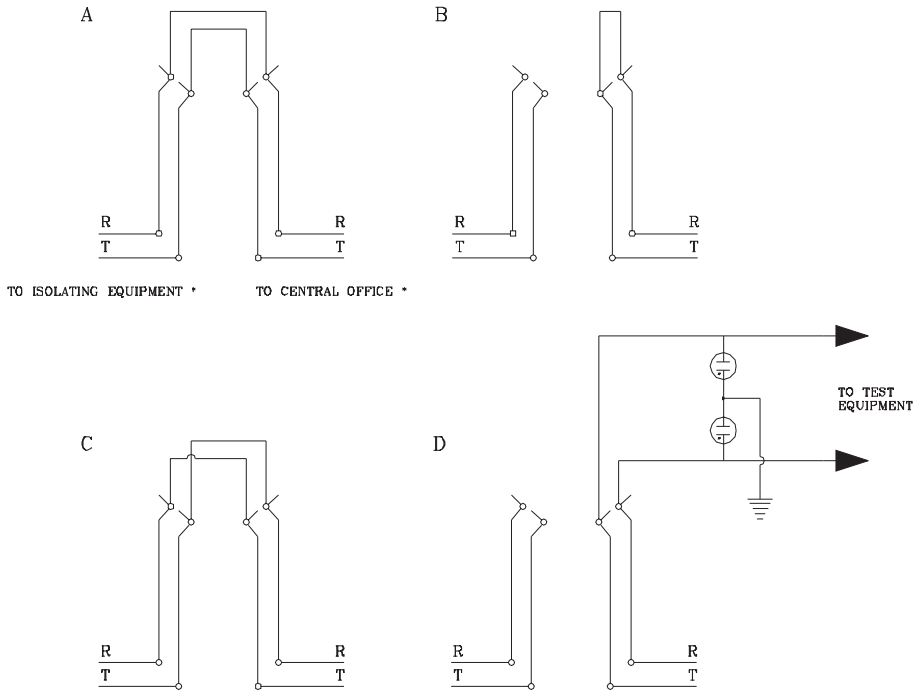

THIS NOTE APPLIES TO ALL FOUR PARTS
A. Insulated looping plug
B. Shorting plug
C. Polarity reversing plug
D. Permanently mounted plug, cord, and protection for testing

Figure A.18—Types of bantam plugs

All computations in this clause are done using a fundamental frequency of 60 Hz.

A telecommunications cable that has its metallic shield grounded in a GPR zone of influence will pick up current during the duration of the fault. The current will flow along the shield to remote ground and will cause a voltage on the shield. This phenomenon results in a transfer of potential from the GPR to the metallic shield.

An example of a cable shield grounded at a single point in a GPR zone of influence and extending to a remote ground is shown in Figure A.19.

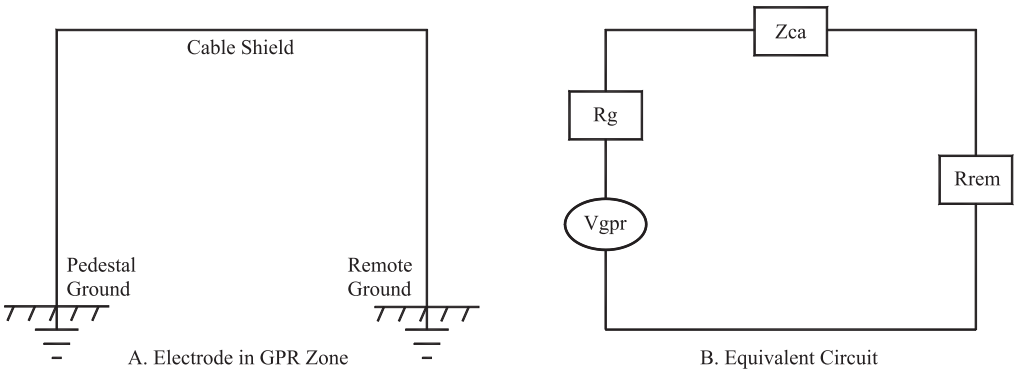

Figure A.19—Example of telecommunications cable grounded at one point in GPR zone of influence

Copyright © 2001 IEEE. All rights reserved.

Copyright The Institute of Electrical and Electronics Engineers, Inc.
Provided by IHS under license with IEEE
No reproduction or networking permitted without license from IHS
Not for Resale

The approximate current flow I, in amperes, on the telecommunications cable shield due to the GPR at the pedestal location is:

$$I \approx \frac{V_{gpr}}{(R_g + Z_{ca} + R_{rem})}$$

where

V_{gpr} = earth GPR at the pedestal with the cable shield open,

R_g = resistance of the pedestal to remote earth in ohms,

R_{rem} = resistance of the remote ground electrode in ohms,

Z_{ca} = the impedance of the cable shield in ohms.

In practical situations, the reactive component of the cable shield impedance is so small compared to the resistance of the pedestal ground that the absolute value of cable shield impedance can be used in calculating the current flow an the cable shield.

The approximate cable shield voltage, to remote earth, V_{ca}, at the pedestal is:

$$V_{ca} \approx I(Z_{ca} + R_{rem})$$

For a simple example, assume that a 200 pair, 24 gauge telecommunication cable is grounded by a single pedestal having 50 Ω resistance to remote earth at a 1000 V point in the GPR zone of influence. The cable extends outside the zone of influence for a distance of 5 kft (1.524 km), where it is connected to an electrode having 2 Ω resistance to remote earth. The self-impedance of this cable shield at 60 Hz is $0.53+j0.25$ $(0.587\angle 25.5^\circ)$ Ω/kft {$1.738 + j0.82$ $(1.926\angle 25.5^\circ)$ Ω/km}. For the duration of the fault, approximately 18.2 A would flow along the cable shield to remote ground. The transfer of potential from the 1000 V earth potential to the cable shield would be approximately 90 V.

The mutual impedance between the cable shield and 200 pairs in the core of the cable is $0.018+j0.253$ $(0.254\angle 85.9^\circ)$ Ω/kft {$0.0591+j0.83$ $(0.8333\angle 25.5^\circ)$ Ω/km}. The current on the shield, 18.2 A, will induce approximately 23.1 V in each of the pairs of the 200 pair cable.

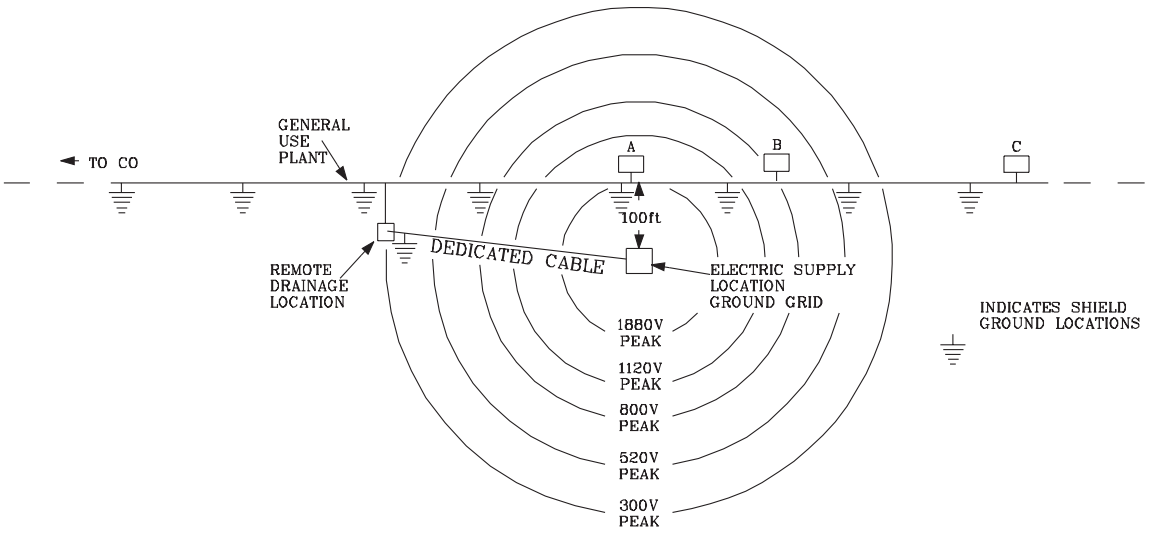

Figure A.20—Illustrative GPR gradient

Copyright © 2001 IEEE. All rights reserved.
Copyright The Institute of Electrical and Electronics Engineers, Inc.
Provided by IHS under license with IEEE
No reproduction or networking permitted without license from IHS
Not for Resale

When a dedicated cable carrying circuits to an electric supply location connects to a general-use telecommunication cable that continues through an area subject to a GPR, there are two general areas of concern. The first is a reduction in reliability of the circuits serving the electric supply location and the second is safety, service, and damage aspects of the general-use cable and the customers served by that cable. This situation is illustrated in the following example in which the circuits to the electric supply location are in a general-use cable that continues through the zone of influence.

In this example, a 900 pair, 26 gauge telecommunications cable extends from the central office through 6 sections of underground conduit and is then buried through a GPR zone of influence to a point 7.15 kft (2.18 km) from the central office. At that location, a 50 pair, 26 gauge cable extends to the end of the route, 11 kft (3.35 km) from the central office. The cable parameters are shown in Table A.7.

Table A.7—Cable parameters

Pairs & gauge	**Shield diameter (inches)**	**DC resistance (Ω/kft)**	**Self impedance (Ω/kft)** $R+jX$	$Z\angle$
900 26	1.80	0.39	$0.408+j0.242$ Ω/kft	$0.474\angle 30.6^\circ$ Ω/kft
50 26	0.37	0.96	$0.978+j0.278$ Ω/kft	$1.02\angle 15.9^\circ$ Ω/kft
Pairs & gauge	**Shield diameter (cm)**	**DC resistance (Ω/km)**	**Self impedance (Ω/km)** $R+jX$	$Z\angle$
900 26	4.57	1.28	$1.339+j0.794$ Ω/km	$1.553\angle 30.6^\circ$ Ω/km
50 26	0.94	3.15	$3.209+j0.912$ Ω/km	$3.347\angle 15.9^\circ$ Ω/km

At the 5.1 kft (1.55 km) location, a dedicated cable extends to the electric supply location but the pairs serving the electric supply location do not go past the 5.1 kft point in the general use cable. The 900 pair cable passes near the ground grid of the electric supply location where the GPR is 1880 V. The central office ground is assumed to be 0.75 Ω, each of the six manholes are 2 Ω and each of the 16 pedestals has a resistance of 50 Ω. The details of grounds to the cable shield and of the assumed GPR along the route are shown in Table A.8.

The purpose of this example is to calculate the current flowing on the cable shield, the voltage of the cable shield to remote ground along the route and the induced voltage in the pairs of the cable due to the current flowing on the cable shield. Calculations involved writing 22 loop equations and solving for loop current using a 22×22 matrix in a spreadsheet. The voltage of the cable shield to remote earth at each ground location was calculated on the same spreadsheet layout. The results of the current and voltage calculations are also shown in Table A.8. The current shown at each ground location is the current flow on the cable shield on the central office side of that location. A minus sign indicates an instantaneous current flow toward the CO; a plus sign indicates instantaneous current flow away from the CO.

The highest cable shield current, 107 A, flows in the section toward the central office side of the zone of influence. The highest voltage of the cable shield to remote earth is 143.8 V at the 6.20 kft (1.89 km) location where the earth GPR is 1250 V. The GPR voltage and cable shield voltage are plotted graphically in Figure A.21.

Another area of concern is the induced voltage on the pairs in the general-use cable due to the current flowing on the shield. The section of greatest concern is from the central office to the 5.1 kft (1.55 km) point, where the dedicated cable splices into the general-use cable. The mutual impedance for a 900 pair, 26 gauge cable is 0.242 Ω/kft. The calculation of this induced voltage is shown in Table A.9.

Copyright © 2001 IEEE. All rights reserved.

Copyright The Institute of Electrical and Electronics Engineers, Inc.
Provided by IHS under license with IEEE
No reproduction or networking permitted without license from IHS
Not for Resale

Table A.8—Shield grounds, GPR and spreadsheet results

Distance from CO (kft) (km)	GPR (V)	Shield grounds (Ω)	Cable shield (A)	Cable shield (V)
0.00 0.00	0	0.75		6.4
0.75 0.23	0	2	−8.5	9.4
1.50 0.46	0	2	−13.2	14.1
2.25 0.69	0	2	−20.3	21.4
3.00 0.91	0	2	−31.0	32.4
3.70 1.13	0	2	−47.2	48.0
4.40 1.34	0	2	−71.2	71.6
5.10 1.55	300	50	−107.0	107.1
5.20 1.59	400	50	−103.1	112.0
5.50 1.68	800	50	−97.4	125.9
5.80 1.77	1880	50	−83.9	137.8
6.00 1.83	1880	50	−49.1	142.5
6.20 1.89	1250	50	−14.3	143.8
6.55 2.00	520	50	+7.8	142.5
7.00 2.13	200	50	+15.4	139.2
7.15 2.18	100	50	+16.6	138.1
7.60 2.32	0	50	+15.8	130.8
8.20 2.50	0	50	+13.2	122.7
9.00 2.74	0	50	+10.8	113.9
9.50 2.90	0	50	+8.5	109.6
10.00 3.05	0	50	+6.3	106.4
10.50 3.20	0	50	+4.2	104.3
11.00 3.35	0	50	+2.1	103.25

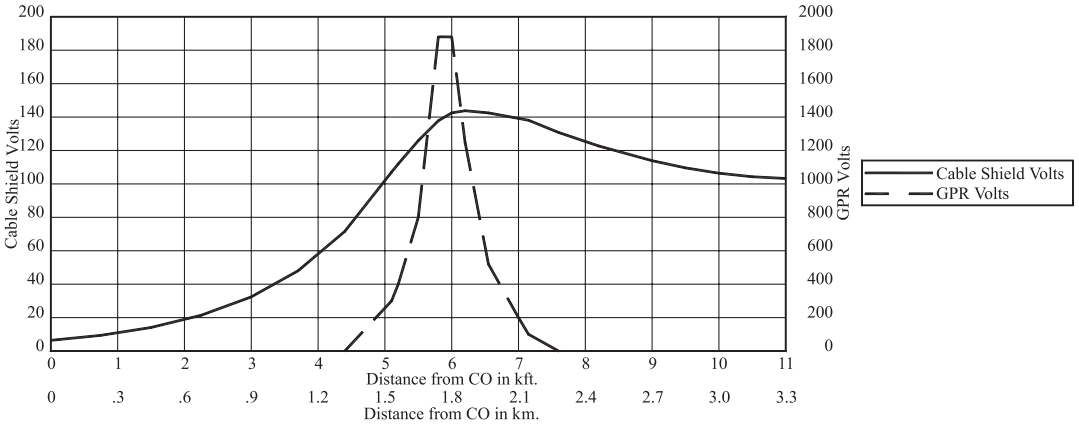

Figure A.21—Cable shield and GPR voltage

Copyright © 2001 IEEE. All rights reserved.
Copyright The Institute of Electrical and Electronics Engineers, Inc.
Provided by IHS under license with IEEE
No reproduction or networking permitted without license from IHS
Not for Resale

Table A.9—Calculation of induced voltage

Section	Length (kft) (km)	Shield current (A)	Z_m (Ω)	Induced voltage (V)
1	0.75 0.23	8.5	0.182	1.5
2	0.75 0.23	13.2	0.182	2.4
3	0.75 0.23	20.3	0.182	3.7
4	0.75 0.23	31.0	0.182	5.6
5	0.70 0.21	47.2	0.169	8.0
6	0.70 0.21	71.2	0.169	12.0
7	0.70 0.21	107.0	0.169	18.1
Total	5.1 1.55			51.3

The calculated value of 51.3 V induced in the first 7 sections of cable is well below a level that would cause circuit degradation.

A.11.2 Evaluation of calculated values

In this example, a telecommunications cable passed through a electric supply location zone of influence where the maximum GPR was 1880 V. The maximum current that was picked up through the pedestal grounds and flowed along the cable was 107 A. The maximum voltage transferred to the cable shield was calculated to be approximately 144 V. This current and voltage would be present only for a short time, usually less than a second.

The metallic elements of cable splice cases are typically designed to carry 1000 A rms current for 20 s. The dielectric strength of cable plant depends on the type of cable and condition of splicing locations. Many companies select several hundred volts as a minimum for cable dielectric in field applications.

If calculations, or experience, indicate that pair-to-shield voltages are excessive, full-count protection (all pairs protected) using gas tubes may be applied at an appropriate point. If protection is placed at the remote drainage location, mutual drainage reactors with gas tubes should be used on Class A circuits serving the electric supply locations.

Copyright © 2001 IEEE. All rights reserved.

Copyright The Institute of Electrical and Electronics Engineers, Inc.
Provided by IHS under license with IEEE
No reproduction or networking permitted without license from IHS
Not for Resale

Annex B

(informative)

Comparison of carbon blocks, gas tubes, and solid-state protectors

B.1 Comparison of gap-type protector characteristics

B.1.1 DC Breakdown

Gas tubes are available with dc breakdown levels as low as 70 V. With carbon blocks, however, the minimum practical level is approximately 500 V dc (3 mil). Clearances of less than 3 mil tend to fill with carbon dust quickly and lead to noisy circuit operation or complete short circuits.

B.1.2 Impulse breakdown

The impulse ratio of carbon blocks is typically lower than that of gas tubes. At low rates of rise, the gas easily fires ahead of the carbon because the dc breakdown can be set much lower. However, at high rates of rise, the carbon blocks may fire ahead of the gas tube (depending on the gas tube design).

B.1.3 Repeatability

The voltage at which the gaps break down depends upon the past history of the gaps. With carbon blocks the breakdown voltage tends to reduce with time. In addition, temperature, pressure, and humidity tend to effect dc breakdown voltage or lead to permanent shorts of carbon blocks.

Gas tubes tend to have more stable characteristics because they are sealed and have a constant gas environment. The magnitude and duration of current and the number of previous operations also have a tendency to reduce the breakdown voltage of gas tubes. The heating effect of large currents passed through the gas tube causes sputtering of the electrode metal, which coats the side walls of the tube. The number of operations leading to failure is larger for gas tubes.

Example: 6–15 operations for carbon blocks at 500 A using a 10×1000 μs wave compared to 600–2000 operations at 500 A and a 10×1000 μs wave for some gas tubes.

B.1.4 Maintenance

Because the gas tube is capable of a larger number of operations at a given current before breakdown, overall maintenance costs are lower than for carbon blocks.

B.1.5 Reliability

Failure of carbon blocks leads to a short-circuit condition, and the circuit becomes inoperative, thus providing an indication of failure.

Copyright © 2001 IEEE. All rights reserved.
Copyright The Institute of Electrical and Electronics Engineers, Inc.
Provided by IHS under license with IEEE
No reproduction or networking permitted without license from IHS
Not for Resale

Gas tubes, however, can develop leaks, and the resulting loss of gas can cause the breakdown voltage to increase. The tube may not provide protection in this condition, and no indication is given of the tube failure.

Some gas tubes are available with a shorting element device that can be activated on sustained currents to provide a claimed fail-short mode of operation. In other instances, carbon blocks, coordinated with the gas tube characteristics, can be used in parallel to provide backup protection.

B.1.6 Noise

Since both the gas tube and carbon blocks are arcing devices, they are not well adapted to low noise operation.

When operating, carbon blocks tend to be least noisy at discharge currents just above the point at which arcing begins, but become increasingly noisy as the current is increased, to the point where they are fully conducting.

Gas tubes have relatively low noise in the low current glow mode, but become very noisy as the current increases to the arcing condition. As current is increased further, the noise decreases until the tube is in the fully conducting state, at which the noise from the carbon blocks and the gas tube is approximately equal.

Carbon blocks are not as likely to extinguish on current zeros of induced power frequency noise. The gas tube will extinguish and restrike on each cycle, causing metallic voltage spikes to appear on the circuit.

B.1.7 Selection of gaps for the proposed protection scheme

One of the most significant factors in the overall protection scheme is the reduction of noise on audio-tone protective relaying circuits. Noise can appear either directly on the audio-tone circuit or as crosstalk from other circuits. In this respect, it is advantageous to use carbon blocks rather than gas tubes. Also, protector operations are expected to be infrequent so that carbon block protectors usually will be satisfactory. Caution should be exercised in the use of carbon blocks on protection relaying channels.

A spark gap may be used between the core and sheath of the dedicated cable. The spark gap coordinates with the high dielectric strength of the cable. Gaps with this voltage rating can be obtained with unity impulse ratios, facilitating insulation coordination.

Circulating currents that can create metallic noise and crosstalk are limited in direct drainage circuits until the breakdown voltage of this gap is exceeded.

B.2 Comparison of solid-state protectors with gas tubes and carbon blocks

B.2.1 DC breakdown

Solid-state protectors can be designed for lower breakdown voltages than carbon blocks or gas tubes. Generally, a protector for telecommunications use has a breakdown voltage greater than 265 V to

Copyright © 2001 IEEE. All rights reserved.

Copyright The Institute of Electrical and Electronics Engineers, Inc.
Provided by IHS under license with IEEE
No reproduction or networking permitted without license from IHS
Not for Resale

provide a margin above the signal (dc battery and 20 Hz ringing voltage) and 50 Hz or 60 Hz induced voltages that may be present on the telecommunications line.

B.2.2 Impulse breakdown

Solid-state protector units operate more precisely when subjected to surges with high rates of rise. It should be noted, however, that surge current in the ground lead of a protector produces an inductive voltage that may appear at an equipment terminal, even though the protector clamps at a relatively low voltage. Therefore, it is most important that the ground leads be kept as short as possible.

B.2.3 Repeatability

Solid-state protectors have more consistent breakdown characteristics than gap-type protectors at a specified test temperature of 20 °C.

B.2.4 Maintenance and reliability

The low on-state voltage and fast clamping operation minimizes damage from power dissipation. This improves reliability and reduces maintenance costs. However, with severe surge currents above 200 A driven by a $10 \times 1000\,\mu s$ waveshape, a typical solid-state protector will fail in a short-circuit mode sooner than a typical gap-type protector.

B.2.5 Noise

Because of manufacturing tolerances, two two-element solid-state protectors will operate in a more balanced mode than gap-type protectors, i.e., both line conductors are shorted to ground almost simultaneously. When operated, there is no noise generated from arcing discharge as in a gap-type unit. However, if any protector, gap type or solid state, is subjected to a periodic voltage waveform above the breakdown voltage of the protector, harmonic noise will be generated.

B.2.6 Temperature

Solid-state protectors have temperature dependence of insulation resistance, limiting voltage, and impulse life. Gap-type protectors are not affected by temperature changes to the same extent.

B.2.7 Capacitance

The capacitance of solid-state protectors increases as voltage decreases and is higher than that of gap-type protectors. Gap-type protectors have a capacitance that is independent of applied voltages.

Copyright © 2001 IEEE. All rights reserved.
Copyright The Institute of Electrical and Electronics Engineers, Inc.
Provided by IHS under license with IEEE
No reproduction or networking permitted without license from IHS
Not for Resale

Annex C

(informative)

Protection of isolating, drainage, and neutralizing transformers and other apparatus by surge arresters

C.1 Possible modes of applied voltage

a) Quiescent: stress—only low levels of 60 Hz steady state induction, if any

b) Lightning impulse only:

   1) GPR on station ground terminal
   2) Surge on remote side from exposed cable

c) Power frequency fault (GPR and induction only) could be symmetrical or asymmetrical

d) Lightning and power frequency coincident

C.2 Equipment insulation level

The insulation level for insulation between terminals is governed by the protective level of the surge arrester and should be adequate for:

a) Voltage developed when subjected to a surge having a wave front of 100 kV/μs per 12 kV of duty cycle voltage rating (front of wave sparkover); discharge voltages with 8/20 discharge currents with crests of varying magnitude for silicon carbide arresters and the front-of-wave; and discharge voltage protective levels for metal oxide surge arresters

b) Voltage developed during a power frequency fault condition (possibly asymmetrical) with adequate 60 Hz protective margin related to maximum applied voltage

The protection ratio between the insulation withstand strength and arrester protection level generally falls between 1.2 and 1.5.

It should be emphasized that, since the isolating or neutralizing transformer is not connected to a power transmission line, its insulation requirements are not directly related to system voltage insulation standards.

The in-service exposure of these transformers is distinctly different from that of power transformers:

a) They are not exposed to continuous 60 Hz service voltage (except for low levels of steady-state induction).

b) They are not, therefore, exposed to direct switching surges.

c) They are not exposed to the same stroke frequency as power equipment with the same nominal kilovolts rating.

Copyright © 2001 IEEE. All rights reserved.

Copyright The Institute of Electrical and Electronics Engineers, Inc.
Provided by IHS under license with IEEE
No reproduction or networking permitted without license from IHS
Not for Resale

C.3 Protection of the transformer or other apparatus

Surge arresters are designed and specified for repeated operation to limit transient surge overvoltages that can appear across insulation of the equipment and to interrupt power follow current. The arrester should not enter operation nor remain in operation following transient actuation during a 60 Hz fault condition.

C.4 Selection of the arrester

C.4.1 Types of arresters

In the past, the use of nonlinear resistor gap-type (valve) arresters for the protection of rotating machines (RM) (distribution type) was recommended. Advances in surge arrester technology have led to the development of gapless arresters using metal oxides for the nonlinear impedance element, and this type is currently recommended. For the sake of completeness, a description of the gap-type arresters is included.

C.4.1.1 Metal oxide surge arresters

Gapless metal oxide surge arresters are widely used on power systems to protect transformers and other apparatus. Finely crushed zinc oxide and small amounts of other selected metal oxides are mixed and pressed into discs that are sintered at a high temperature to obtain blocks or discs of dense ceramic material. The basic structure of these blocks consists primarily of zinc oxide grains that are surrounded and separated by intergranular layers of the metal oxide additives. The zinc oxide grains are highly conductive, while the boundary with the intergranular layers has a very high resistance at low electrical stresses. However, when the electrical stress across this layer boundary is increased sufficiently, its resistance falls very rapidly. This nonlinear characteristic limits surge voltages appearing across the arrester terminals.

Selection of the arrester for power system applications is based upon the maximum continuous operating voltage (MCOV) that can be applied to the arrester terminals on a continuous basis. Arresters can be damaged if the power frequency voltage exceeds the MCOV, unless such operation is within the limits of special application guidelines provided by the manufacturer for temporary overvoltage capability of the arrestors. Specifically, these guidelines define overvoltage–time curves below which the arrester will not be damaged.

At voltages below the MCOV rating, the arrester conducts very small currents in the microampere range. However, as the MCOV is exceeded, conducted currents will increase and can remain in the ampere range for short-time durations.

Surge arresters used in communications cable protection schemes are not exposed to continuous power frequency voltages of significant magnitudes; therefore, duty cycle and MCOV ratings are not directly relevant to this application.

C.4.1.2 Gap-type arresters

Gap-type arresters consist of internal and external spark gaps connected in series with either silicon carbide or metal oxide valve elements. The purpose of the valve element is to limit 60 Hz power follow currents to levels that can be interrupted by the series gap assembly.

Copyright © 2001 IEEE. All rights reserved.
Copyright The Institute of Electrical and Electronics Engineers, Inc.
Provided by IHS under license with IEEE
No reproduction or networking permitted without license from IHS
Not for Resale

It has been common practice to specify a rotating machine surge arrester based on the rated voltage of the transformers and to coordinate the insulation level to the protection level of the surge arrester. Since the actual impulse environment is unknown, rotating machine arresters were chosen because of their low impulse sparkover voltages. Therefore, an overly stringent requirement was not placed on designing transformer insulation.

RM arresters have lower impulse sparkover values than distribution-type arresters. The determining factor may be their cost or availability, or both.

C.4.2 Rating of arresters

C.4.2.1 Metal oxide arrester

a) Select an arrester that has an MCOV equal to or greater than the maximum power frequency voltage that will appear across the apparatus terminals on a continuous basis. Where applicable, dc offset effects and some design margin should be considered. Coordinate any power frequency voltage that may appear on equipment terminals due to transient conditions with the temporary overvoltage capabilities of the arrester. This will ensure that the arrester will not be damaged in service.

b) Confirm that the arrester-conducted current at the maximum transient overvoltage will have no significant adverse effects on the cable protection system. For example, in a neutralizing transformer installation that does not use a spark gap between the primary pairs and the arrester, the remanent voltage will be increased by the current conducted through the arrester. In this instance, the arrester must be selected to reduce its influence on the remanent voltage to an acceptable level.

c) For the selected arrester, refer to the maximum discharge voltages provided by the manufacturer. These values can be used to define the impulse test level of the transformer or other apparatus. The appropriate discharge current to be used will depend on the application and degree of lightning exposure (for well-shielded stations the discharge currents are considered to be low). It should be noted that, for communication protection purposes, the 0.5 μs front-of-wave discharge current is considered excessive.

C.4.2.2 Gap-type arresters

a) Select an arrester that has a duty cycle voltage rating equal to or greater than the maximum power frequency voltage that will appear across the transformer.

b) This standard procedure ensures that the arrester will interrupt power follow current (for example, proper arrester operation). Use of arresters with ratings that are too low may result in excessive failure rate of arresters in service. The principal cause of arrester damage in the field is a system condition that subjects the arrester to a sustained power frequency voltage in excess of its voltage rating. With the higher voltage, the follow current may not be interrupted because:

   1) Follow current is increased.
   2) The voltage the gap must interrupt is higher.

c) Not only will the arrester fail to function properly with power frequency voltages in excess of its rating, but an increasing risk of damage also exists as voltage exceeds the arrester rating up until a point at which it equals the power frequency sparkover voltage. (At this point on a

Copyright © 2001 IEEE. All rights reserved.

Copyright The Institute of Electrical and Electronics Engineers, Inc.
Provided by IHS under license with IEEE
No reproduction or networking permitted without license from IHS
Not for Resale

transmission or distribution system, damage is virtually certain.) The power frequency sparkover voltage is usually at least 1.5 times the rating. Although the asymmetrical magnitudes can be higher than symmetrical rated voltage, the duty cycle is less severe due to current limiting, decay, and duration of applied voltage.

d) However, if an arrester with a higher rating is chosen to ensure a greater safety factor during asymmetrical fault conditions, an increase in impulse sparkover voltage will result, requiring a corresponding increase in the impulse insulation strength of the transformer.

Compare the impulse protective level of the arrester with the full-wave impulse withstand insulation strength of the device, or the impulse withstand strength for any shorter durations for which higher values are given by the manufacturer, if applicable. The minimum protective ratio between insulation withstand strength and arrester protective level should be 1.2.

e) The impulse protective level is given numerically by the maximum of the following quantities:

1) Front-of-wave impulse sparkover voltage divided by 1.15
2) $1.2 \times 50\,\mu s$ sparkover voltage (full wave)
3) Residual (discharge) voltage at a given discharge current (for well-shielded stations the discharge currents are considered to be low in magnitude)

A surge arrester, if used, is connected across a neutralizing transformer primary winding or between isolating transformer windings, or both. (See Figure 16.)

C.4.3 Surge arrester characteristics

Typical characteristics for distribution class, metal oxide surge arresters are given in Table C.1. Typical characteristics for distribution class, low impulse sparkover type (RM) surge arresters are given in Table C.2.

Table C.1—Typical characteristics for distribution class, metal oxide type surge arresters

Unit rating[b] rms (kV)	MCOV[c] (kV)	Maximum front of wave[d] (kV)	Maximum *IR* discharge voltage[a]			
			1500 A (kV)	5000 A (kV)	10 000 A (kV)	20 000 A (kV)
3.0	2.55	14.0	9.7	10.9	12.0	13.7
4.5[e]	3.00	18.0	13.0	15.0	16.5	18.0
6.0	5.10	27.0	18.2	21.0	23.5	25.7
7.5[e]	5.70	29.0	21.0	24.0	26.0	29.0
9.0	7.65	35.3	25.5	28.7	31.5	35.9
10.0	8.40	43.0	29.0	35.0	39.0	45.0
12.0	10.20	51.0	35.0	42.0	47.0	54.0

[a]8/20 current wave.
[b]Standard duty cycle ratings.
[c]The maximum duty continuous operating voltage is the maximum designated rms value of power frequency voltage that may be applied continuously between the arrester terminals.
[d]Equivalent front-of-wave protection level is the discharge voltage for a 5 kA (normal duty) or 10 kA (heavy duty) impulse current wave cresting in 0.5 μs.
[e]These are not standard ANSI ratings and may not be readily available.

Copyright © 2001 IEEE. All rights reserved.
Copyright The Institute of Electrical and Electronics Engineers, Inc.
Provided by IHS under license with IEEE
No reproduction or networking permitted without license from IHS
Not for Resale

Table C.2—Typical characteristics for distribution class, low impulse sparkover type (RM) surge arresters

Maximum impulse sparkover voltage IEEE front-of-wave test[a]			Maximum *IR* discharge voltage[ab]				
Unit rating[c] rms (kV)	With external gap[d] (kV)	Without external gap[d] (kV)	1500 A (kV)	3000 A (kV)	5000 A (kV)	10 000 A (kV)	20 000 A (kV)
3.0	—	16	9.5	10.5	11.0	12	13.5
4.5[e]	—	18	15.0	17.0	17.5	19	21.5
6.0	—	24	19.0	21.0	22.0	24	27.0
7.5[e]	—	26	25.0	27.0	29.0	31	35.0
9.0	—	32	28.0	32.0	33.0	36	40.0
10.0	—	34	28.0	32.0	33.0	36	40.0
12.0	—	39	38.0	42.0	44.0	48	54.0

[a]All values listed are maximum values.
[b]8/20 current wave.
[c]Maximum permissible line-to-ground system frequency voltage on arrester.
[d]Rate of voltage application: 100 kV/μs per 12 kV of arrester rating or fraction thereof.
[e]These are not standard ANSI ratings and may not be readily available.

Copyright © 2001 IEEE. All rights reserved.

Copyright The Institute of Electrical and Electronics Engineers, Inc.
Provided by IHS under license with IEEE
No reproduction or networking permitted without license from IHS
Not for Resale

Annex D

(informative)

Transmission characteristics and SPO requirements for various communication channels

Table D.1—Transmission characteristics and SPO requirements for various communication channels

Type of communication channel	Typical SPO class	Transmission characteristics
Pilot wire—used for line relay protection. Tripping occurs as a result of the combined output of the communications channel and the end relays.	A	Certain pilot-wire schemes require a physical metallic path end-to-end. There are many different types of pilot-wire schemes, and the transmission limitations may vary widely. A typical pilot-wire system may operate at a maximum of 60 V with a 60 Hz current varying between 0 and 100 mA. In addition to the circulating 60 Hz current, a small circulating dc (usually 1 mA) may be employed to monitor cable pair continuity. Typically, the maximum loop resistance permissible may vary from 1000 Ω to 2800 Ω. This is influenced by the tap settings on the relay. The maximum permissible shunt capacitance is normally between 0.75 μF and 1.5 μF.
Remote or transfer trip—used to direct trip the far end of a line without permission of the far end for transformer protection, local backup breaker failure, etc.	A	(1) *DC tripping schemes*. Some power companies employ simple dc tripping schemes for short-haul applications. There are different types, but most require a metallic path end-to-end. A typical dc tripping scheme will operate at a voltage of 130 V dc isolated and a current of 0.35 A. The maximum loop resistance permissible may vary between 2000 Ω and 3000 Ω. There is no shunt capacitance limitation. (2) *Tripping schemes employing VF (audio) tones*. These channels have attenuation, gain-frequency, and steady-state noise limitations, all of which will vary widely depending upon the power system design criteria and the type of communication equipment to be used.
Audio-tone line relaying—used for line relaying protection. Tripping occurs as a result of the combined output of the communications channel and the end relays.	A	Same as for direct transfer trip [see item (2) above].
Telemetry and supervisory control.	B	(1) *DC telemetry*. Simple dc telemetry schemes are used for short-haul application. Normally, a physical metallic pair is provided. A possible limitation is dc resistance of the pair. (2) Schemes employing VF tone or analog signals. The communication channel normally has attenuation, gain, frequency, and steady-state noise limitations that vary widely depending upon the design criteria and the equipment used.
Remote-control channels associated with mobile radio transmitters.	B	(1) *Voice channel with a control scheme employing dc signals*. A typical channel may have a maximum 1000 Hz attenuation of 10 dB. This is normally the only transmission requirement, although dc resistance could be a limitation. (2) *Voice channel with a control scheme employing VF control tones*. These channels normally have attenuation, gain-frequency, and steady-state noise limitations.
Telephone and teletype channels	B or C	*Analog signal with dc or ac signaling*. A typical channel is one with an attenuation of 10 dB at 1000 Hz. Teletypewriter channels carry ON/OFF dc pulses at various baud rates, typically 30 or 57 baud. There is a typical background noise limitation of 70 dBrn (flat).

Copyright © 2001 IEEE. All rights reserved.
Copyright The Institute of Electrical and Electronics Engineers, Inc.
Provided by IHS under license with IEEE
No reproduction or networking permitted without license from IHS
Not for Resale

Annex E

(informative)

DC offset waveform development

E.1 Sine wave

All the ac circuits that are considered have current and voltages following a sine wave. A sine wave is generated by a revolving vector, i.e., inside a rotating machine (see Figure E.1).

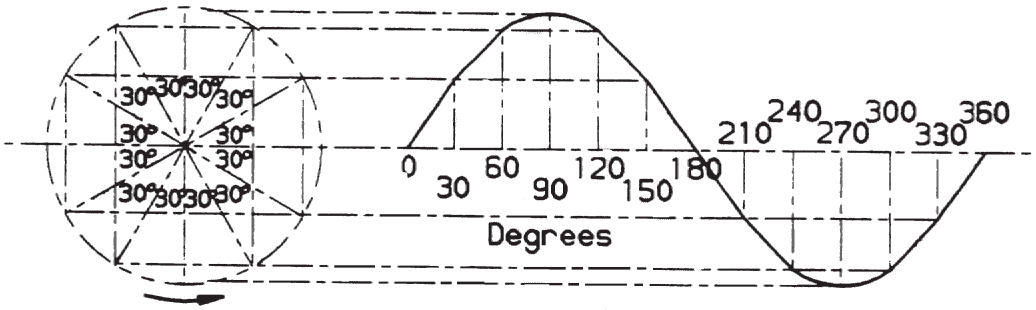

Figure E.1—Generation of sine wave

E.2 Sinusoidal wave

A sinusoidal wave is the same as a sine wave (see Clause E.1).

E.3 Effective current

Since an alternating current varies continuously from 0 to maximum to 0, first in one direction and then in the other, it is not readily apparent just what the true current value really is.

The current at any point on a sine wave is called the instantaneous current. It is also possible to determine the arithmetic average value of the alternating current, but none of these values correctly relate ac to dc. It is certainly desirable to have 1 A ac do the same work as 1 A dc. This current is called the effective current, and 1 A effective ac will have the same heating effect as 1 A dc.

E.4 Rms current

Effective current is more commonly called rms current. Root mean square (rms) is the square root of the average of all the instantaneous currents squared.

The rms value of a sine wave is readily determined by calculus but can perhaps be more easily understood by simple arithmetic. The user should consider a half sine wave having a 10 A maximum or peak value (see Figure E.2).

Copyright © 2001 IEEE. All rights reserved.

Copyright The Institute of Electrical and Electronics Engineers, Inc.
Provided by IHS under license with IEEE
No reproduction or networking permitted without license from IHS
Not for Resale

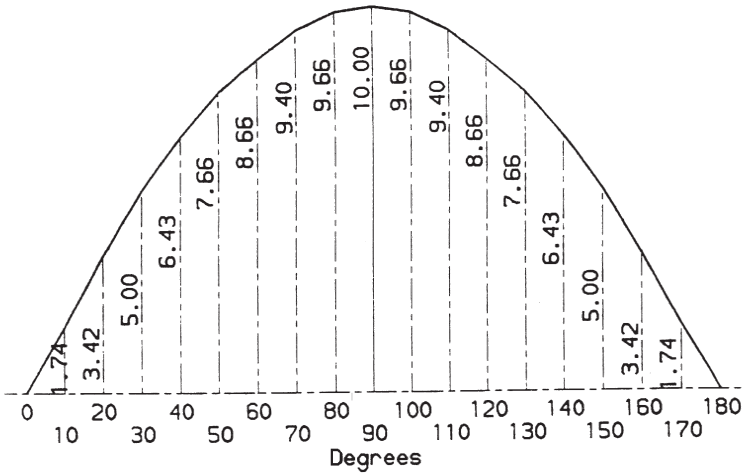

Figure E.2—Instantaneous current

Using instantaneous currents at 10° intervals, the value of the instantaneous currents can be easily measured. These values have been tabulated in Table E.1. These values have also been squared. The average instantaneous current and the average squared instantaneous current are found by dividing the totals by 18. The square root of the average squared instantaneous current is easily found and readily understood.

Table E.1—Calculation of Average and RMS Currents

Degrees	Instantaneous amperes	Instantaneous amperes squared
0	0	0
10	1.74	3.03
20	3.42	11.79
30	5.00	25.00
40	6.43	41.25
50	7.66	58.67
60	8.66	75.00
70	9.40	88.36
80	9.86	97.22
90	10.00	100.00
110	9.40	88.36
120	8.66	75.00
130	7.66	58.67
140	6.43	41.35
150	5.00	25.00
160	3.42	11.79
170	1.74	3.03
180	0	0
Total	114.34	900.0
Average	6.36	50.0
rms = $\sqrt{50.0} = 7.07$ A		

Copyright © 2001 IEEE. All rights reserved.
Copyright The Institute of Electrical and Electronics Engineers, Inc.
Provided by IHS under license with IEEE
No reproduction or networking permitted without license from IHS
Not for Resale

The average current of a sine wave is 0.636 of the peak current, and the effective or rms current is 0.707 of the peak current.

In other words, the peak is 1.4 times the rms value. Standard ac ammeters are marked in rms amperes, and, unless stated otherwise, all ac currents are considered rms currents.

When considering currents that flow for a few cycles or less, it is necessary to specify what kind of amperes are being considered, such as:

a) Rms (effective)

b) Peak (crest)

c) Average

d) Instantaneous

The two currents shown in Figure E.3 have the same effective value.

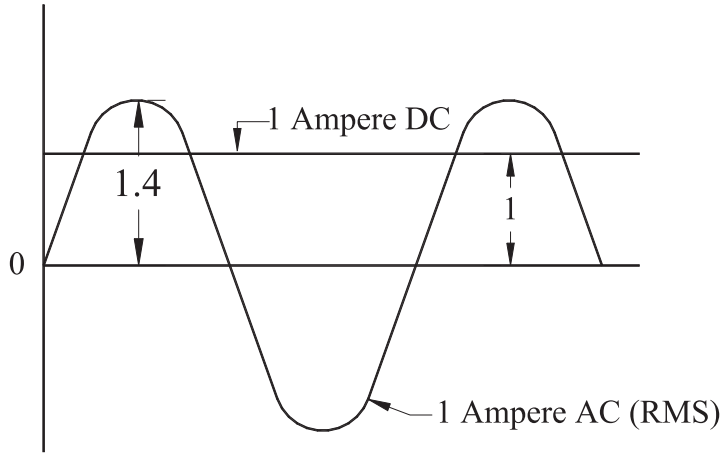

Figure E.3—Effective value of 1 ampere dc and ac

E.5 Symmetrical current

A symmetrical current wave is symmetrical about the zero axis of the wave. This wave has the same magnitude above and below the zero axis (see Figure E.4).

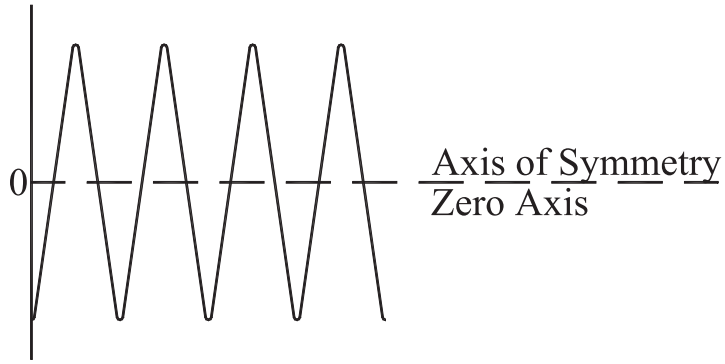

Figure E.4—Symmetrical current

Copyright © 2001 IEEE. All rights reserved.

Copyright The Institute of Electrical and Electronics Engineers, Inc.
Provided by IHS under license with IEEE
No reproduction or networking permitted without license from IHS
Not for Resale

E.6 Asymmetrical current

An asymmetrical current wave is not symmetrical about the zero axis. The axis of symmetry is displaced or offset from the zero axis, and the magnitudes above and below the zero axis are not equal.

E.7 Offset current

An asymmetrical wave can be partially offset or fully offset. Figure E.5 shows a fully offset wave. Offset waves are sometimes called displaced waves.

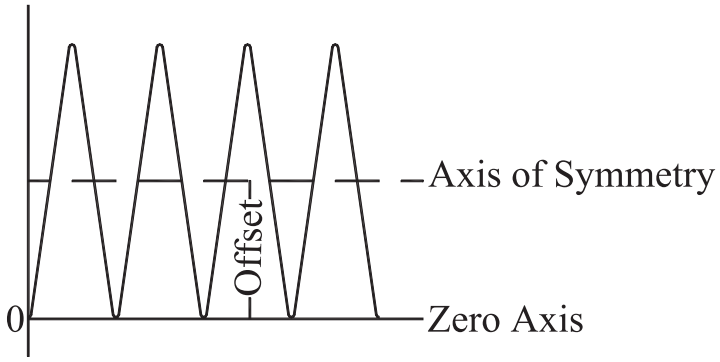

Figure E.5—Fully offset wave

E.8 DC component

The axis of symmetry of an offset wave resembles a dc current, and asymmetrical currents can be readily handled if they are considered to have an ac component and a dc component. Both of these components are theoretical. The dc component is generated within the ac system and has no external source.

Figure E.6 shows a fully offset asymmetrical current with a steady dc component as its axis of symmetry. The symmetrical component has the zero axis as its axis of symmetry. If the rms or effective value of the symmetrical current is 1, then the peak of the symmetrical current is 1.41. This is also the effective value of the dc component. By adding these two effective currents together and taking the square root of the sum of the squares, the effective or rms value of the asymmetrical current becomes

$$I_{asy} = \sqrt{I_{dc}^2 + I_{sym}^2}$$

$$I_{asy} = \sqrt{(1.41)^2} = \sqrt{3} = 1.73$$

The rms value of a fully offset asymmetrical current therefore is 1.73 times the symmetrical rms current. It is readily apparent that the peak asymmetrical current is twice the peak symmetrical current, i.e., $2 \times 1.41 = 2.82$.

E.9 Total current

The term total current is used to express the total sum of the ac component and the dc component of an asymmetrical current.

Copyright © 2001 IEEE. All rights reserved.
Copyright The Institute of Electrical and Electronics Engineers, Inc.
Provided by IHS under license with IEEE
No reproduction or networking permitted without license from IHS
Not for Resale

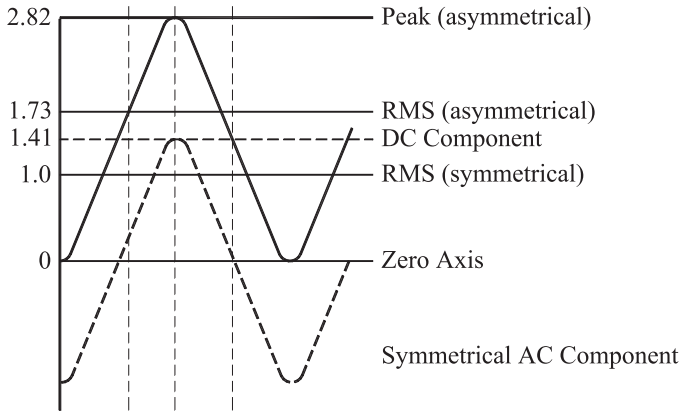

Figure E.6—Fully offset ac wave with dc component

Total current and total asymmetrical current have the same meaning and may be expressed in peak or rms amperes.

E.10 Decay

Unfortunately, fault currents usually are neither symmetrical nor fully asymmetrical, but rather somewhere in between. The dc component is usually short lived and is said to decay rapidly.

In Figure E.7, the dc component decays to zero in about four cycles. The rate of decay is called *decrement* and depends upon the circuit constants, i.e. the effective X/R of the circuit. The dc component would never decay in a circuit that has reactance but zero resistance, and would remain constant forever. In a circuit that has resistance but zero reactance, the dc component would decay instantaneously. These are theoretical conditions, and all practical circuits have some resistance and reactance. The dc component disappears in a few cycles, generally less than four cycles.

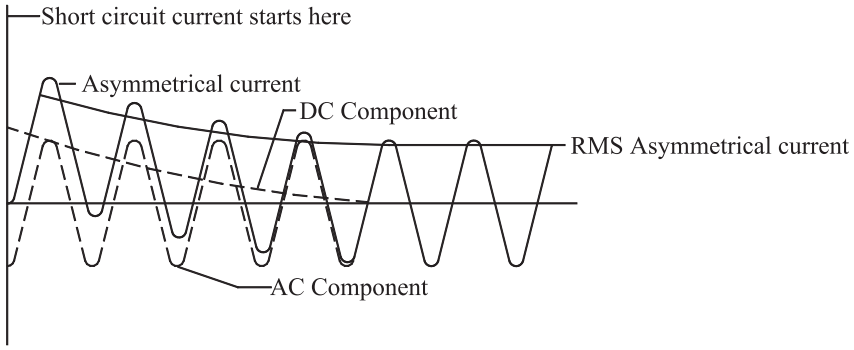

Figure E.7—DC component decay

E.11 Closing angle

A short-circuit fault can occur at any point on the voltage wave of a circuit; however, faults generally occur at or close to maximum voltage.

Copyright © 2001 IEEE. All rights reserved.

Copyright The Institute of Electrical and Electronics Engineers, Inc.
Provided by IHS under license with IEEE
No reproduction or networking permitted without license from IHS
Not for Resale

The voltage wave resembles the current wave. The two waves may be in phase or out of phase, and the magnitude and symmetry of the current wave on a short circuit depends on the point on the voltage wave at which the short occurs.

In laboratory tests, it is possible to pick the point on the voltage wave at which the fault occurs by closing the circuit at any desired angle on the voltage wave.

E.12 Random closing

Faults can occur at any and every point on the voltage wave and, in a laboratory, this can be duplicated by closing the circuit at random. This is known as random closing. The following is true of a short circuit that has negligible resistance:

a) If the fault occurs at zero voltage, the current wave is fully asymmetrical; thus, a maximum value of short-circuit current is obtained.

b) If the fault occurs at maximum voltage, the current wave is completely symmetrical, and a minimum value of short-circuit current is obtained.

Power system faults usually fall into one of two categories, depending on the cause of the fault and the power equipment and system involved. The first category would include slow acting phenomena relative to the power frequency voltage waveform. Examples include many forms of insulation breakdown, conductors swinging in the wind, the approach of animals or birds, and the slow contact closure of certain types of circuit breakers into an existing fault. These types of faults occur at or close to peak voltage; therefore, the dc offset will be at or near zero.

Faults due to certain fast acting phenomena fall into the second category. Faults due to the closing of some types of fast acting circuit breakers that do not involve the use of pre-insertion resistors or inductors, or faults due to lightning strokes to phase conductors where there are no overhead ground wires, may occur at points on the voltage waveform at or close to zero voltage. The resulting dc offset, depending upon other important criteria, may vary from zero upwards to some significant magnitude. Only in this case, the resulting dc offset may, although very infrequently, approach maximum based on the specific circuit parameters.

Copyright © 2001 IEEE. All rights reserved.
Copyright The Institute of Electrical and Electronics Engineers, Inc.
Provided by IHS under license with IEEE
No reproduction or networking permitted without license from IHS
Not for Resale

Annex F

(informative)

High dielectric optic isolation systems

Fiber-optic isolation systems utilize a length of either high dielectric plastic fiber or glass fiber to provide high-voltage isolation. Because the basic isolation is provided by a variable length of nonconductive fiber-optic cable, isolation voltages of 70.7 kV peak or more are achievable. Circuit arrangements on each side of the fiber-optic cable convert electrical signals to optical signals for transmission through the optical fiber(s), and then reconvert these signals back to standard telecommunication signals. Various circuit arrangements provide one-way or two-way transmission and permit transmission of various combinations of voice and/or dc signals. Fiber-optic isolation systems may be located entirely within the zone of GPR, entirely outside the zone of GPR, or may have one end outside the zone and the other end inside the zone. Optical transmission links may vary from a number of meters to a number of kilometers.

F.1 Protection configurations employing fiber-optic isolation systems

This fiber-optic equipment can provide high-voltage isolation for a single telecommunications line or for multiple lines (shelves with plug-in cards for each line). In either single-line or multi-line applications, the following design criteria should apply.

Such equipment provides high-voltage protection by isolating the telco CO exchange cable pairs (ground) from any source of high voltage by a section of nonconductive fiber optic cable. In order to maintain the integrity of this protective system, careful consideration should be given to the following areas:

a) Isolation requirements

b) Equipment placement

c) Powering requirements

F.1.1 Isolation requirements

When one end of a fiber-optic link is located outside the zone of GPR, the length of fiber-optic cable will usually provide more than enough isolation. Note that optical fiber cables used with isolation systems may be all-dielectric or may have metallic strength members. Where the optical fiber cables have metallic members, the members must be isolated from ground at the electric supply location and within the zone of influence in the same manner as the metallic shields of paired cables. When both ends of a fiber-optic cable are to be installed within the zone of GPR, special consideration must be given to the CO interface end. For this reason, most fiber-optic terminal equipment employs housings that are made of high-dielectric material and are designed to be installed on a plywood backplane. The thickness of the backplane will vary from 19 mm to 26 mm, depending upon the manufacturer's recommendations. However, care should be taken during backplane installation and location to minimize the possibility of moisture contamination, which can substantially reduce the isolation provided.

Copyright © 2001 IEEE. All rights reserved.

Copyright The Institute of Electrical and Electronics Engineers, Inc.
Provided by IHS under license with IEEE
No reproduction or networking permitted without license from IHS
Not for Resale

F.1.2 Equipment placement

This equipment package can increase flexibility in the design of an installation and reduce the space required. It can allow for the design of installations that will eliminate the possibility of personnel bridging the isolation protection with their hands or bodies during maintenance or use. To achieve this, the CO end equipment is located at least 2 m from the subscriber end equipment.

F.1.3 Powering requirements

Fiber-optic terminal equipment is an electronic-based system that requires power for both the CO end equipment and the subscriber end equipment. To preclude the possibility of bridging the isolation protection with a power supply or source, this equipment, installed within the zone of GPR, is designed to be powered from two isolated sources; i.e., via the cable pairs at the CO end and ac/dc rectifier with battery backup at the subscriber end. In those applications that use telco lines that have no power or where a CO battery is not available, there are a variety of options available, including solar power, to feed the CO end equipment.

Copyright © 2001 IEEE. All rights reserved.
Copyright The Institute of Electrical and Electronics Engineers, Inc.
Provided by IHS under license with IEEE
No reproduction or networking permitted without license from IHS
Not for Resale

Annex G

(informative)

Bibliography

[B1] AIEE S117-1960, Application and Protection of Pilot Wire Circuits for Protective Relaying.

[B2] Anderson, R. B. and Eriksson, A. J., "Lightning Parameters for Engineering Application," *Electra*, no. 69, pp. 65–102, Mar. 1980.

[B3] ANSI C62.61-1993, American National Standard for Gas Tube Surge Arrestors on Wire Line Telephone Circuits.

[B4] CEA 077D-184A, Application Guide for Surge Arresters on Distribution Systems, Canadian Electrical Association, Sep. 1988.

[B5] CIGRE Study Committee No. 36 (Interference) papers, 1976–1990.

[B6] Eriksson, A. J., "Lightning and Tall Structures," *Transactions of the AIEE*, Pt. 8, Vol. 69, pp. 238–252, Aug. 1978.

[B7] Geer, Jr., E. W. and Whatmough, J. R. "Staged Fault and Laboratory Tests on a Cable Pair Protection System Designed to Serve Power stations," *IEEE Transactions on Communications*, Vol. COM-22, No. 2, pp. 193–199, Feb. 1974.

[B8] GR-974 (1999) Generic Requirements for Telecommunications Line Protector Units (TLPUS), Telcordia (1999).

[B9] GR-1361 (1998) Generic Requirements for Gas Tube Protector Units, Telcordia (1998).

[B10] Grcev, L. D. "Computer Analysis of Transient Voltages in Large Grounding Systems," *IEEE Transactions on Power Delivery*, Vol. 11, No. 2, Apr. 1996, pp. 815–823.

[B11] IEC 555-1991, Disturbances in supply systems caused by household appliances and similar electrical equipment, Parts I–V inclusive.

[B12] IEEE C37.90.1-1989 (Reaff 1994), IEEE Standard Surge Withstand Capability (SWC) Tests for Protective Relays and Relay Systems.

[B13] IEEE C62.11-1993, IEEE Standard for Metal-Oxide Surge Arresters for AC Power Circuits (ANSI).

[B14] IEEE C62.32-1981 (Reaff 1998), IEEE Standard Test Specifications for Low-Voltage Air Gap Surge-Protective Devices (ANSI).

[B15] IEEE Committee Report, "Lightning Protection in Multi-Line Stations," *IEEE Transactions on Power Apparatus and Systems*, Vol. PAS-87, pp. 1514–1521, Jun. 1968.

[B16] IEEE Std 4-1995, IEEE Standard Techniques for High-Voltage Testing (ANSI).

[B17] IEEE Std 142-1991, Recommended Practice for Grounding of Industrial and Commercial Power Systems.

Copyright © 2001 IEEE. All rights reserved.

Copyright The Institute of Electrical and Electronics Engineers, Inc.
Provided by IHS under license with IEEE
No reproduction or networking permitted without license from IHS
Not for Resale

[B18] IEEE Std 455-1985 (Reaff 1992), IEEE Standard Test Procedure for Measuring Longitudinal Balance of Telephone Equipment Operating in the Voice Band (ANSI).

[B19] IEEE Std 1410-1997, Guide for Improving the Lightning Performance of Electric Power Overhead Distribution Lines.

[B20] ITU-T Directives concerning the protection of telecommunications lines against harmful effects from electric power and electrified railway lines.

[B21] ITU-T Recommendations for protection against interference, IX Plenary Assembly, Vol. IX, Series K (Blue Book).

[B22] Papalexopoulos, A. D. and Meliopoulos, A. P. "Frequency Dependent Characteristics of Grounding Systems," *IEEE Transactions on Power Delivery*, Vol. PWRD-2, Oct. 1987, pp. 1073–1081.

[B23] PES Paper 88 WM 032-5, Applying Metal-Oxide Surge Arresters on Distribution Systems, *IEEE Transactions on Power Delivery*, Vol. 4, No. 1, pp. 301–307, Jan. 1989.

[B24] Popovic, L. M. "Practical Method for Evaluating Ground Current Distribution in Station, Tower and Ground Wire," *IEEE Transactions on Power Delivery*, Vol. 13, No. 1, Jan. 1998, pp. 123–128.

[B25] Sargent, Michael A. The Frequency Distribution of Current Magnitudes of Lightning Strokes to Tall Structures. IEEE PAS-9, pp. 2224–2229, Sep./Oct. 1972.

[B26] Sargent, Michael A. Monte Carlo Simulation of the Lightning Performance of Overhead Shielding Networks of High-Voltage Stations. IEEE PAS, pp. 1651–1656, Jul./Aug. 1972.

[B27] Trueblood, H. M. and Sunde, E. D. Lightning Current Observations in Buried Cable, *Bell System Technical Journal*, Vol. 28, pp. 728–302, Apr. 1949.

[B28] Westinghouse Electric Corporation, *Electrical Transmission and Distribution Reference Book*, 1964.

[B29] Xiong, W. and Dawalibi, F. P. "Transient Performance of Substation Systems Subjected to Lightning and Similar Surge Currents," *IEEE Transactions on Power Delivery*, Vol. 9, Jul. 1994, pp. 1421–1427.

Copyright © 2001 IEEE. All rights reserved.
Copyright The Institute of Electrical and Electronics Engineers, Inc.
Provided by IHS under license with IEEE
No reproduction or networking permitted without license from IHS
Not for Resale