Recognized as an
American National Standard (ANSI)

IEEE Std 242-2001
(Revision of
IEEE Std 242-1986)

IEEE Recommended Practice for Protection and Coordination of Industrial and Commercial Power Systems

Sponsor

Industrial and Commercial Power Systems Department
of the
IEEE Industry Applications Society

Approved 14 June 2001
IEEE-SA Standards Board

Approved 25 October 2001
American National Standards Institute

Abstract: The principles of system protection and the proper selection, application, and coordination of components that may be required to protect industrial and commercial power systems against abnormalities that could reasonably be expected to occur in the course of system operation are presented in a in a simple, yet comprehensive, format. The principles presented apply to both new electrical system design and to the changing, upgrading, or expansion of an existing electrical distribution system.
Keywords: bus protection, cable protection, calibration, conductor protection, coordinating time intervals, current-limiting fuses, current transformers, fuse coordination, fuse selectivity, generator grounding, generator protection, high-voltage fuses, liquid preservation systems, low-voltage motor protection, medium-voltage motor protection, motor protection, overcurrent protection, potential transformers, power fuses, protective relays, relay application principles, relay operating principles, service protection, short-circuit protection, switchgear protection, system design, system protection, transformer protection, voltage transformers

--`,,`-`-`,,`,,`,`,,`---
Copyright The Institute of Electrical and Electronics Engineers, Inc.
Provided by IHS under license with IEEE
No reproduction or networking permitted without license from IHS
Not for Resale

Grateful acknowledgment is made to the following organizations for having granted permission to reprint material in this document as listed below:

Table 10-1 from National Electrical Manufacturers Assocation.

Reprinted from NEMA MG10-1994 by permission of the National Manufacturers Assocation. © Copyright 1997 by the National Electrical Manufacturers Assocation. All rights, including translation into other languages, reserved under the Universal Copyright Convention, the Berne Convention for the Protection of Literary and Artistic Works, and the International and Pan American Copyright Conventions.

Figure 10-14, Figure 10-15, and Figure 10-18 from Bentley-Nevada.

Figure 10-16 and Figure 10-17 from API 541-1995.

First Printing
17 December 2001
SH94930
SS94930

The Institute of Electrical and Electronics Engineers, Inc.
3 Park Avenue, New York, NY 10016-5997, USA

Copyright © 2001 by the Institute of Electrical and Electronics Engineers, Inc.
All rights reserved. Published 17 December 2001. Printed in the United States of America

ISBN 0-7381-2844-9

No part of this publication may be reproduced in any form, in an electronic retrieval system or otherwise, without the prior written permission of the publisher.

--`,-`-`,,`,,`,`,,`---

Copyright The Institute of Electrical and Electronics Engineers, Inc.
Provided by IHS under license with IEEE
No reproduction or networking permitted without license from IHS

Not for Resale

IEEE Standards documents are developed within the IEEE Societies and the Standards Coordinating Committees of the IEEE Standards Association (IEEE-SA) Standards Board. The IEEE develops its standards through a consensus development process, approved by the American National Standards Institute, which brings together volunteers representing varied viewpoints and interests to achieve the final product. Volunteers are not necessarily members of the Institute and serve without compensation. While the IEEE administers the process and establishes rules to promote fairness in the consensus development process, the IEEE does not independently evaluate, test, or verify the accuracy of any of the information contained in its standards.

Use of an IEEE Standard is wholly voluntary. The IEEE disclaims liability for any personal injury, property or other damage, of any nature whatsoever, whether special, indirect, consequential, or compensatory, directly or indirectly resulting from the publication, use of, or reliance upon this, or any other IEEE Standard document.

The IEEE does not warrant or represent the accuracy or content of the material contained herein, and expressly disclaims any express or implied warranty, including any implied warranty of merchantability or fitness for a specific purpose, or that the use of the material contained herein is free from patent infringement. IEEE Standards documents are supplied "**AS IS**."

The existence of an IEEE Standard does not imply that there are no other ways to produce, test, measure, purchase, market, or provide other goods and services related to the scope of the IEEE Standard. Furthermore, the viewpoint expressed at the time a standard is approved and issued is subject to change brought about through developments in the state of the art and comments received from users of the standard. Every IEEE Standard is subjected to review at least every five years for revision or reaffirmation. When a document is more than five years old and has not been reaffirmed, it is reasonable to conclude that its contents, although still of some value, do not wholly reflect the present state of the art. Users are cautioned to check to determine that they have the latest edition of any IEEE Standard.

In publishing and making this document available, the IEEE is not suggesting or rendering professional or other services for, or on behalf of, any person or entity. Nor is the IEEE undertaking to perform any duty owed by any other person or entity to another. Any person utilizing this, and any other IEEE Standards document, should rely upon the advice of a competent professional in determining the exercise of reasonable care in any given circumstances.

Interpretations: Occasionally questions may arise regarding the meaning of portions of standards as they relate to specific applications. When the need for interpretations is brought to the attention of IEEE, the Institute will initiate action to prepare appropriate responses. Since IEEE Standards represent a consensus of concerned interests, it is important to ensure that any interpretation has also received the concurrence of a balance of interests. For this reason, IEEE and the members of its societies and Standards Coordinating Committees are not able to provide an instant response to interpretation requests except in those cases where the matter has previously received formal consideration.

Comments for revision of IEEE Standards are welcome from any interested party, regardless of membership affiliation with IEEE. Suggestions for changes in documents should be in the form of a proposed change of text, together with appropriate supporting comments. Comments on standards and requests for interpretations should be addressed to:

Secretary, IEEE-SA Standards Board

445 Hoes Lane

P.O. Box 1331

Piscataway, NJ 08855-1331

USA

Note: Attention is called to the possibility that implementation of this standard may require use of subject matter covered by patent rights. By publication of this standard, no position is taken with respect to the existence or validity of any patent rights in connection therewith. The IEEE shall not be responsible for identifying patents for which a license may be required by an IEEE standard or for conducting inquiries into the legal validity or scope of those patents that are brought to its attention.

The IEEE and its designees are the sole entities that may authorize the use of the IEEE-owned certification marks and/or trademarks to indicate compliance with the materials set forth herein.

Authorization to photocopy portions of any individual standard for internal or personal use is granted by the Institute of Electrical and Electronics Engineers, Inc., provided that the appropriate fee is paid to Copyright Clearance Center. To arrange for payment of licensing fee, please contact Copyright Clearance Center, Customer Service, 222 Rosewood Drive, Danvers, MA 01923 USA; +1 978 750 8400. Permission to photocopy portions of any individual standard for educational classroom use can also be obtained through the Copyright Clearance Center.

--`,,`,,`-`-`,,`,,`,`,,`---

Copyright The Institute of Electrical and Electronics Engineers, Inc.
Provided by IHS under license with IEEE
No reproduction or networking permitted without license from IHS

Not for Resale

Introduction

(This introduction is not a part of IEEE Std 242-2001, IEEE Recommended Practice for Protection and Coordination of Industrial and Commercial Power Systems.)

IEEE Std 242-2001, the *IEEE Buff Book*™, has been extensively revised and updated since it was first published in 1975. The *IEEE Buff Book* deals with the proper selection, application, and coordination of the components that constitute system protection for industrial plants and commercial buildings. System protection and coordination serve to minimize damage to a system and its components in order to limit the extent and duration of any service interruption occurring on any portion of the system.

A valuable, comprehensive sourcebook for use at the system design stage as well as in modifying existing operations, the *IEEE Buff Book* is arranged in a convenient step-by-step format. It presents complete information on protection and coordination principles designed to protect industrial and commercial power systems against any abnormalities that could reasonably be expected to occur in the course of system operation.

Design features are provided for

— Quick isolation of the affected portion of the system while maintaining normal operation elsewhere
— Reduction of the short-circuit current to minimize damage to the system, its components, and the utilization equipment it supplies
— Provision of alternate circuits, automatic throwovers, and automatic reclosing devices

Participants

At the time this recomended practice was approved, the IEEE Working Group on Protection and Coordination of Industrial and Commercial Power Systems had the following members and contributors:

Carey Cook, *Chair*

Chapter 1: First principles—**Robert G. Hoerauf**, *Chair*; R. G. (Jerry) Irvine

Chapter 2: Short-circuit calculations—**Louie J. Powell**, *Chair*; David S. Baker, Chet Davis, John F. Witte

Chapter 3: Instrument transformers—**James D. Bailey** and **David S. Baker,** *Cochairs;* B. J. Behroon, Louie J. Powell, Marcelo Valdes

Chapter 4: Selection and application of protective relays—**Keith R. Cooper**, **N. T. (Terry) Stringer**, **John F. Witte**, *Cochairs*; Bruce G. Bailey, David S. Baker, James W. Brosnahan, Carey J. Cook, David D. Shipp, John F. Witte

Chapter 5: Low-voltage fuses—**Vincent J. Saporita**, *Chair*; Robert L. Smith, Alan F. Wilkinson

Chapter 6: High-voltage fuses—**John R. Cooper**, *Chair*; Carey J. Cook, Herb Pflanz, Kris Ranjan, John F. Witte

Copyright © 2001 IEEE. All rights reserved.

--`,,`-`-`,,`,,`,`,,`---

Copyright The Institute of Electrical and Electronics Engineers, Inc.
Provided by IHS under license with IEEE
No reproduction or networking permitted without license from IHS

Not for Resale

Chapter 7: Low-voltage circuit breakers—**George D. Gregory**, *Chair*; Bruce G. Bailey, John Chiloyan, Keith R. Cooper, R. G. (Jerry) Irvine, Steve Schaffer

Chapter 8: Ground-fault protection—**Shaun P. Slattery**, *Chair*; James P. Brosnahan, John Chiloyan, Edward Gaylon, Daniel. J. Love, Elliot Rappaport, Steven Schaffer, S. I. Venugopalan

Chapter 9: Conductor protection—**William Reardon**, *Chair*; John Chiloyan, George D. Gregory, Alan C. Pierce, Vincent J. Saporita

Chapter 10: Motor protection—**Daniel J. Love**, *Chair*; Al Hughes, Alan C. Pierce, Lorraine K. Padden, Joseph S. Dudor, R. G. (Jerry) Irvine

Chapter 11: Transformer protection—**Alan C. Pierce**, *Chair*; Carey J. Cook, John R. Cooper, Jerry Frank, Vincent J. Saporita, N. T. (Terry) Stringer, Ralph H. Young

Chapter 12: Generator protection—**Alan C. Pierce**, *Chairs*; Jay D. Fisher, Robert G. Hoerauf, Danial J. Love, Robert L. Simpson, Ralph H. Young

Chapter 13: Bus and switchgear protection—**Robert L. Smith, Jr.**, *Chair*; Edward Gaylon, Steve Schaffer, John Steele

Chapter 14: Service supply line protection—**Lorraine K. Padden**, *Chair*; Consumer Interface Protection and Relaying Practices Subcommittees of the IEEE Power Systems Relaying Committee

Chapter 15: Overcurrent coordination—**N. T. (Terry) Stringer**, *Chair*; Bruce G. Bailey, Keith R. Cooper, Joseph S. Dudor, Douglas Durand, Tim Fink, Jay D. Fisher, George D. Gregory, William M. Hall, Steve Schaffer, John F. Witte, Ralph H. Young

Chapter 16: Maintenance, testing, and calibration—**R. G. (Jerry) Irvine**, *Chair*; Donald J. Akers, Jerry S. Baskin, Roderic L. Hageman, Ted Olsen, Gabe Paoletti, Elliot Rappaport, David, L. Swindler, Neil H. Woodley

The following members of the balloting group voted on this standard. Balloters may have voted for approval, disapproval, or abstention:

Bruce G. Bailey
James D. Bailey
David S. Baker
Ray M. Clark
Carey J. Cook
John R. Cooper
Chet Davis
George D. Gregory
Robert G. Hoerauf
R. G. (Jerry) Irvine
Daniel J. Love
Lorraine K. Padden
Alan C. Pierce
Louie J. Powell
William Reardon
Vincent J. Saporita
David D. Shipp
Shaun P. Slattery
Robert L. Smith, Jr.
N. T. (Terry) Stringer
John F. Witte
Ralph H. Young

Copyright © 2001 IEEE. All rights reserved.

--`,,`,,`-`-`,,`,,`,`,,`---

Copyright The Institute of Electrical and Electronics Engineers, Inc.
Provided by IHS under license with IEEE
No reproduction or networking permitted without license from IHS
Not for Resale

When the IEEE-SA Standards Board approved this standard on 14 June 2001, it had the following membership:

Donald N. Heirman, *Chair*
James T. Carlo, *Vice Chair*
Judith Gorman, *Secretary*

Satish K. Aggarwal	James H. Gurney	James W. Moore
Mark D. Bowman	Richard J. Holleman	Robert F. Munzner
Gary R. Engmann	Lowell G. Johnson	Ronald C. Petersen
Harold E. Epstein	Robert J. Kennelly	Gerald H. Peterson
H. Landis Floyd	Joseph L. Koepfinger*	John B. Posey
Jay Forster*	Peter H. Lips	Gary S. Robinson
Howard M. Frazier	L. Bruce McClung	Akio Tojo
Ruben D. Garzon	Daleep C. Mohla	Donald W. Zipse

*Member Emeritus

Also included is the following nonvoting IEEE-SA Standards Board liaison:

Alan Cookson, *NIST Representative*
Donald R. Volzka, *TAB Representative*

Noelle D. Humenick
IEEE Standards Project Editor

IEEE Color Book Series and *IEEE Buff Book* are both registered trademarks of the Institute of Electrical and Electronics Engineers, Inc.

National Electrical Code and NEC are both registered trademarks of the National Fire Protection Association, Inc.

National Electrical Safety Code and NESC are both registered trademarks and service marks of the Institute of Electrical and Electronics Engineers, Inc.

Copyright © 2001 IEEE. All rights reserved.

--`,,`,,`-`-`,,`,,`,`,,`---

Copyright The Institute of Electrical and Electronics Engineers, Inc.
Provided by IHS under license with IEEE
No reproduction or networking permitted without license from IHS
Not for Resale

Contents

Chapter 1
First principles 1
1.1 Overview....1
1.2 Protection against abnormalities....3
1.3 Planning system protection 4
1.4 Preliminary design 5
1.5 Basic protective equipment....7
1.6 Special protection 8
1.7 Field follow-up 8
1.8 References....8

Chapter 2
Short-circuit calculations 11
2.1 Introduction....11
2.2 Types of short-circuit currents 12
2.3 The nature of short-circuit currents 13
2.4 Protective device currents 15
2.5 Per-unit calculations 19
2.6 Short-circuit current calculation methods 19
2.7 Symmetrical components....20
2.8 Network interconnections....28
2.9 Calculation examples 33
2.10 Specialized faults for protection studies 41
2.11 References....44
2.12 Bibliography 45

Chapter 3
Instrument transformers 47
3.1 Introduction....47
3.2 Current transformers (CTs)....47
3.3 Voltage (potential)transformers (VTs) 62
3.4 References....65
3.5 Bibliography 65

Chapter 4
Selection and application of protective relays 67
4.1 General discussion of a protective system 67
4.2 Zones of protection 9
4.3 Fundamental operating principles....70
4.4 Functional description .application and principles 71
4.5 References....119
4.6 Bibliography 119

Chapter 5
Low-voltage fuses 129
5.1 General discussion 129
5.2 Definitions....129
5.3 Documentation....133

Copyright © 2001 IEEE. All rights reserved.

Copyright The Institute of Electrical and Electronics Engineers, Inc.
Provided by IHS under license with IEEE
No reproduction or networking permitted without license from IHS
Not for Resale

5.4 Standard dimensions 138
5.5 Typical interrupting ratings 146
5.6 Achieving selectivity with fuses 147
5.7 Current-limiting characteristics 151
5.8 Special applications for low-voltage fuses 155
5.9 References 166
5.10 Bibliography 168

Chapter 6
High-voltage fuses (1000 V through 169 kV) 169
6.1 Definitions 169
6.2 Fuse classification 173
6.3 Current-limiting and expulsion power fuse designs 177
6.4 Application of high-voltage fuses 183
6.5 References 197
6.6 Bibliography 198

Chapter 7
Low-voltage circuit breakers 199
7.1 General 199
7.2 Ratings 200
7.3 Current limitation 202
7.4 Typical ratings 203
7.5 Trip unit 203
7.6 Application 216
7.7 Accessories 226
7.8 Conclusions 226
7.9 References 227
7.10 Bibliography 228

Chapter 8
Ground-fault protection 231
8.1 General discussion 231
8.2 Types of systems relative to ground-fault protection 232
8.3 Nature,magnitudes,and damage of ground faults 239
8.4 Frequently used ground-fault protective schemes 249
8.5 Typical applications 255
8.6 Special applications 269
8.7 References 281
8.8 Bibliography 281

Chapter 9
Conductor protection 285
9.1 General discussion 285
9.2 Cable protection 285
9.3 Definitions 287
9.4 Short-circuit current protection of cables 288
9.5 Overload protection of cables 307
9.6 Physical protection of cables 321
9.7 Code requirements for cable protection 324

Copyright © 2001 IEEE. All rights reserved.

Copyright The Institute of Electrical and Electronics Engineers, Inc.
Provided by IHS under license with IEEE
No reproduction or networking permitted without license from IHS
Not for Resale

9.8 Busway protection 325
9.9 References....336
9.10 Bibliography 337

Chapter 10
Motor protection 339
10.1 General discussion 339
10.2 Factors to consider in protection of motors 339
10.3 Types of protection....344
10.4 Low-voltage motor protection 350
10.5 Medium-voltage motor protection 358
10.6 References....389
10.7 Bibliography 390

Chapter 11
Transformer protection 393
11.1 General discussion 393
11.2 Need for protection 393
11.3 Objectives in transformer protection 394
11.4 Types of transformers....395
11.5 Preservation systems....395
11.6 Protective devices for liquid preservation systems 398
11.7 Thermal detection of abnormalities 408
11.8 Transformer primary protective device....415
11.9 Protecting the transformer from electrical disturbances 415
11.10 Protection from the environment 436
11.11 Conclusion 437
11.12 References....437
11.13 Bibliography 438

Chapter 12
Generator protection 441
12.1 Introduction....441
12.2 Classification of generator applications....441
12.3 Short-circuit performance 444
12.4 Generator grounding 451
12.5 Protective devices 454
12.6 References....512
12.7 Bibliography 512

Chapter 13
Bus and switchgear protection 515
13.1 General discussion 515
13.2 Types of buses and arrangements....516
13.3 Bus overcurrent protection....518
13.4 Medium-and high-voltage bus differential protection 519
13.5 Backup protection 525
13.6 Low-voltage bus conductor and switchgear protection 525
13.7 Voltage surge protection 526
13.8 Conclusion 528

Copyright © 2001 IEEE. All rights reserved.

Copyright The Institute of Electrical and Electronics Engineers, Inc.
Provided by IHS under license with IEEE
No reproduction or networking permitted without license from IHS
Not for Resale

13.9 References 528
13.10 Bibliography 529

Chapter 14
Service supply-line protection 531
14.1 General discussion 531
14.2 Service requirements 532
14.3 System disturbances 535
14.4 Supply-line protection 547
14.5 Examples of supply-system protective schemes 558
14.6 References 571
14.7 Bibliography 573

Chapter 15
Overcurrent coordination 575
15.1 General discussion 575
15.2 General considerations 576
15.3 Overcurrent protection guidelines 580
15.4 TCC plots 590
15.5 CTIs 596
15.6 Initial planning and data required for a coordination study 604
15.7 Procedure 607
15.8 Ground-fault coordination on low-voltage systems 626
15.9 Phase-fault coordination on substation 600 V or less 627
15.10 References 636
15.11 Bibliography 636

Chapter 16
Maintenance, testing, and calibration 639
16.1 Overview 639
16.2 Definitions 640
16.3 Safety of personnel 641
16.4 Safety provisions for maintenance operations 643
16.5 Frequency of maintenance operations 648
16.6 Maintenance of switchgear for voltages up to 1000 V ac and 1200 V dc 652
16.7 Maintenance of air-magnetic switchgear for voltages above 1000 V ac and 1200 V dc 659
16.8 Maintenance of oil switchgear 669
16.9 Maintenance of vacuum circuit breaker switchgear 675
16.10 Maintenance of sulfur hexafluoride (SF_6) circuit breaker and load-interrupter switchgear 679
16.11 Diagnostic testing 682
16.12 Maintenance of auxiliary items 689
16.13 Maintenance of protective apparatus 695
16.14 Maintenance and testing of insulation 696
16.15 Maintenance of industrial molded-case circuit breakers (MCCBs) 699
16.16 References 701
16.17 Bibliography 704

Index 711

Copyright © 2001 IEEE. All rights reserved.

Copyright The Institute of Electrical and Electronics Engineers, Inc.
Provided by IHS under license with IEEE
No reproduction or networking permitted without license from IHS
Not for Resale

IEEE Recommended Practice for Protection and Coordination of Industrial and Commercial Power Systems

Chapter 1
First principles

1.1 Overview

1.1.1 Scope

IEEE Std 242-2001, commonly known as the *IEEE Buff Book*™, is published by the Institute of Electrical and Electronics Engineers (IEEE) as a reference source to provide a better understanding of the purpose for and techniques involved in the protection and coordination of industrial and commercial power systems.

IEEE Std 242-2001 has been prepared on a voluntary basis by engineers and designers functioning as a working group within the IEEE, under the Industrial and Commercial Power Systems Department of the Industry Applications Society. This recommended practice is not intended as a replacement for the many excellent texts available in this field. IEEE Std 242-2001 complements the other standards in the *IEEE Color Book Series*™, and it emphasizes up-to-date techniques in power system protection and coordination that are most applicable to industrial and commercial power systems. Coverage is limited to system protection and coordination as it pertains to system design treated in IEEE Std 141-1993[1] and IEEE Std 241-1990. No attempt is made to cover utility systems or residential systems, although much of the material presented is applicable to these systems.

This publication presents in a step-by-step, simplified, yet comprehensive, form the principles of system protection and the proper application and coordination of those components that may be required to protect industrial and commercial power systems against abnormalities that could reasonably be expected to occur in the course of system operation. The principles presented are applicable to both new electrical system design and to the changing, upgrading, or expansion of an existing electrical distribution system.

[1]Information on references can be found in 1.8.

Copyright © 2001 IEEE. All rights reserved.

Copyright The Institute of Electrical and Electronics Engineers, Inc.
Provided by IHS under license with IEEE
No reproduction or networking permitted without license from IHS
Not for Resale

1.1.2 Objectives

The objectives of electrical system protection and coordination are to

— Limit the extent and duration of service interruption whenever equipment failure, human error, or adverse natural events occur on any portion of the system
— Minimize damage to the system components involved in the failure

The circumstances causing system malfunction are usually unpredictable; however, sound design and preventive maintenance can reduce the likelihood of system problems. The electrical system, therefore, should be designed and maintained to protect itself automatically.

1.1.2.1 Safety

Prevention of human injury is the most important objective when designing electrical systems. Interrupting devices should have adequate interrupting capability. Energized parts should be sufficiently enclosed or isolated to avoid exposing personnel to explosion, fire, arcing, or shock. Safety should always take priority over service continuity, equipment damage, or economics.

These fundamental principles of safety have always been adhered to by responsible engineers engaged in the design and operation of electrical systems. The National Electrical Code® (NEC®) (NFPA 70-1999), National Electrical Safety Code® (NESC®) (Accredited Standards Committee C2-2002), NFPA 70E-2000, and state and local codes all have prescribed practices intended to enhance the safety of electrical systems. In recent years, an increased concern about safety has led to many studies resulting in detailed recommendations [from the National Institute of Occupational Safety and Health (NIOSH)] and regulations relating to electrical systems. Prominent among these are the regulations of the Occupational Safety and Health Administration (OSHA) of the U.S. Department of Labor. Engineers and other personnel engaged in the design and operation of electrical system protection should be familiar with the most recent OSHA regulations, NIOSH Safely Alerts, and all other applicable codes and regulations relating to human safety.

The essential electrical infrastructure in industrial and commercial establishments employs protective devices, many of which are addressed in this recommended practice, that function to de-energize the electrical system in the event of a malfunction. However, electric shock can result in serious injury far more quickly than the available technology of interruption can perform its task. Therefore, the limitation of shock hazard, such as the step and touch potentials in electrical substations, depends upon the speed of interrupting the fault. Rapid fault isolation is important (see IEEE Std 80-2000). Therefore, the most efficient form of electrical shock protection is to avoid shock altogether, and such avoidance is best accomplished through proper system design and operation, and through effective maintenance.

1.1.2.2 Equipment damage versus service continuity

Whether minimizing the risk of equipment damage or preserving service continuity is the more important objective depends upon the operating philosophy of the particular industrial

 Copyright © 2001 IEEE. All rights reserved.

Copyright The Institute of Electrical and Electronics Engineers, Inc.
Provided by IHS under license with IEEE
No reproduction or networking permitted without license from IHS Not for Resale

plant or commercial business. Some operations can afford limited service interruptions to minimize the possibility of equipment repair or replacement costs, while others would regard such an expense as small compared with even a brief interruption of service.

In most cases, electrical protection should be designed for the best compromise between equipment damage and service continuity. One of the prime objectives of system protection is to obtain selectivity to minimize the extent of equipment shutdown in case of a fault. Therefore, many protection engineers would prefer that faulted equipment be de-energized as soon as the fault is detected.

However, for certain continuous process industry plants, high-resistance grounding systems that allow the first ground fault to be alarmed instead of automatically cleared are employed. These systems are described in Chapter 8.

1.1.2.3 Economic and reliability considerations

The cost of system protection determines the degree of protection that can be feasibly designed into a system. Many features may be added that improve system performance, reliability, and flexibility, but incur an increased initial cost. However, failure to design into a system at least the minimum safety and reliability requirements inevitably results in unsatisfactory performance, with a higher probability of expensive downtime. Modifying a system that proves inadequate is more expensive and, in most cases, less satisfactory than initially designing these features into a system.

The system should always be designed to isolate faults with a minimum disturbance to the system and should have features to give the maximum dependability consistent with the plant requirements and justifiable costs. Evaluation of costs should also include equipment maintenance requirements. In many instances, plant requirements make planned system outages for routine maintenance difficult to schedule. Such factors should weigh into the economic-versus-reliability decision process.

When costs of downtime and equipment maintenance are factored into the protection system cost evaluation, decisions can then be based upon total cost over the useful life of the equipment rather than simply the first cost of the system. In-depth coverage of reliability-versus-economic decisions can be found in IEEE Std 493-1997.

1.2 Protection against abnormalities

The principal electrical system abnormalities to protect against are short circuits and overloads. Short circuits may be caused in many ways, including failure of insulation due to excessive heat or moisture, mechanical damage to electrical distribution equipment, and failure of utilization equipment as a result of overloading or other abuse. Circuits may become overloaded simply by connecting larger or additional utilization equipment to the circuit. Overloads may also be caused by improper installation and maintenance, such as misaligned shafts and worn bearings. Improper operating procedures (e.g., too frequent starting,

Copyright © 2001 IEEE. All rights reserved.

--`,,`-`-`,,`,,`,`,,`---

Copyright The Institute of Electrical and Electronics Engineers, Inc.
Provided by IHS under license with IEEE
No reproduction or networking permitted without license from IHS
Not for Resale

extended acceleration periods, obstructed ventilation) are also a cause of equipment overload or damage.

Short circuits may occur between two-phase conductors, between all phases of a polyphase system, or between one or more phase conductors and ground. The short circuit may be solid (or bolted) or welded, in which case the short circuit is permanent and has a relatively low impedance. The extreme case develops when a miswired installation is not checked prior to circuit energization. In some cases the short circuit may burn itself clear, probably opening one or more conductors in the process. The short circuit may also involve an arc having relatively high impedance. Such an arcing short circuit can do extensive damage over time without producing exceptionally high current. An arcing short circuit may or may not extinguish itself. Another type of short circuit is one with a high-impedance path, such as dust accumulated on an insulator, in which a flashover occurs. The flashover may be harmlessly extinguished or the ionization produced by the arc may lead to a more extensive short circuit. These different types of short circuits produce somewhat different conditions in the system.

Electrical systems should be protected against the highest short-circuit currents that can occur; however, this maximum fault protection may not simultaneously provide adequate protection against lower current faults, which may involve an arc that is potentially destructive.

Ground faults comprise the majority of all faults that occur in industrial and commercial power systems. Ground-fault currents may be destructive, even though the magnitude may be reduced by a high impedance in the fault and return path. Several methods of grounding are available; and the appropriate selection for the particular voltage level, combined with proper detection and relaying, can help achieve the goals of reduced damage and service continuity. For this reason, Chapter 8 is devoted to ground-fault protection.

With the increasing use of nonlinear system loads and devices, harmonics have become an ever-increasing system abnormality to contend with. Electrical system design, whether new or through changes or additions to an existing system, should take into account the possible effects of harmonic current and voltages on system equipment and protective devices. In many cases, harmonics may cause excessive heating in system components; improper operation of control, metering, and protective devices; and other problems.

Other sources of abnormality, such as lightning, load surges, and loss of synchronism, usually have little or no effect on system overcurrent selectivity, but should not be ignored. These abnormalities usually can be best handled on an individual protective basis for the specific equipment involved (e.g., transformers, motors, generators).

1.3 Planning system protection

The designer of electrical power systems has available several techniques to minimize the effects of abnormalities occurring on the system or in the utilization equipment that the system supplies. One can design into the electric system features that

 Copyright © 2001 IEEE. All rights reserved.

Copyright The Institute of Electrical and Electronics Engineers, Inc.
Provided by IHS under license with IEEE
No reproduction or networking permitted without license from IHS Not for Resale

a) Quickly isolate the affected portion of the system and, in this manner, maintain normal service for as much of the system as possible. This isolation also minimizes damage to the affected portion of the system.
b) Minimize the magnitude of the available short-circuit current and, in this manner, minimize potential damage to the system, its components, and the utilization equipment it supplies.
c) Provide alternate circuits, automatic transfers, or automatic reclosing devices, where applicable, in order to minimize the duration or the extent of supply and utilization equipment outages.

System protection encompasses all of the above techniques; however, this text deals mainly with the prompt isolation of the affected portion of the system. Accordingly, the function of system protection may be defined as the detection and prompt isolation of the affected portion of the system whenever a short-circuit or other abnormality occurs that might cause damage to, or adversely affect, the operation of any portion of the system or the load that it supplies.

Coordination is the selection and/or setting of protective devices in order to isolate only the portion of the system where the abnormality occurs. Coordination is a basic ingredient of a well-designed electrical distribution protection system and is mandatory in certain health care and continuous process industrial systems.

System protection is one of the most basic and essential features of an electrical system and should be considered concurrently with all other essential features. Too often system protection is considered after all other design features have been determined and the basic system design has been established. Such an approach may result in an unsatisfactory system that cannot be adequately protected, except by a disproportionately high expenditure. The designer should thoroughly examine the question of system protection at each stage of planning and incorporate into the final system a fully integrated protection plan that is capable of, and is flexible enough, to grow with the system.

In planning electric power systems, the designer should endeavor to keep the final design as simple as would be compatible with safety, reliability, maintainability, and economic considerations. Designing additional reliability or flexibility into a system may lead to a more complex system requiring more complex coordination and maintenance of the protective system. Such additional complexity should be avoided except where the requisite personnel, equipment, and know-how are available to adequately service and maintain a complex electric power system.

1.4 Preliminary design

The designer of an electrical power system should first determine the load requirement, including the sizes and types of loads, and any special requirements. The designer should also determine the available short-circuit current at the point of delivery, the time-current curves and settings of the nearest utility protective devices, and any contract restrictions on ratings and settings of protective relays or other overcurrent protective devices in the user's system.

Copyright © 2001 IEEE. All rights reserved.

--`,,`-`-`,,`,,`,`,,`---

Copyright The Institute of Electrical and Electronics Engineers, Inc.
Provided by IHS under license with IEEE
No reproduction or networking permitted without license from IHS
Not for Resale

(See Figure 1-1.) The designer can then proceed with a preliminary system design and preparation of a one-line diagram.

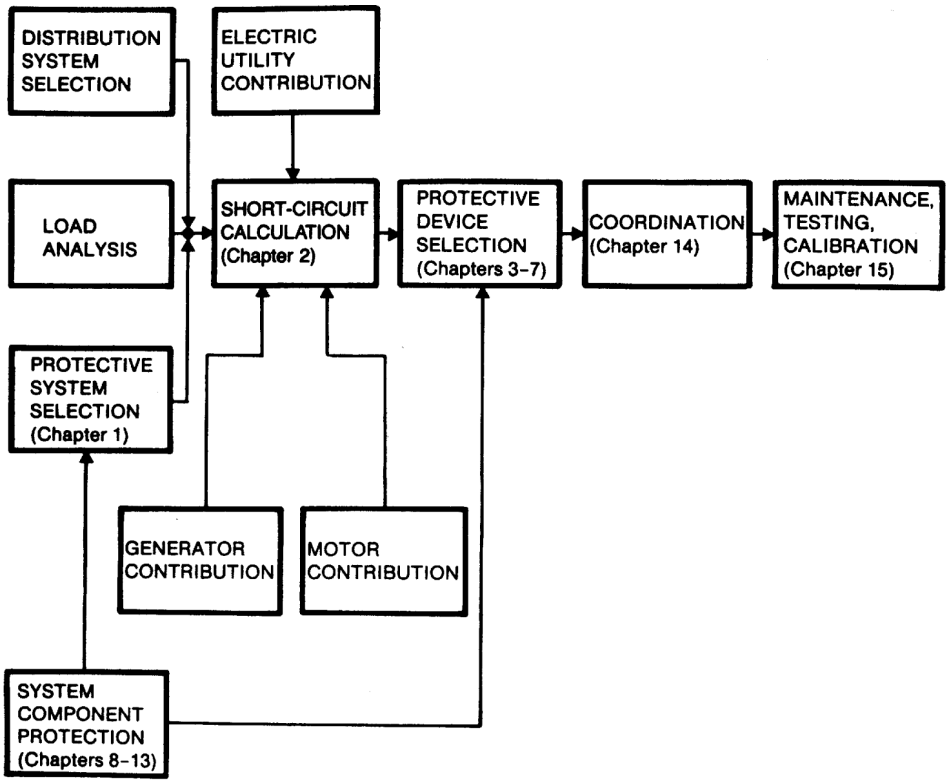

Figure 1-1—Sequence of steps in system protection and coordination

Chapter 2 covers the fundamentals of short-circuit analysis and the calculation of short-circuit duty requirements that permit evaluation of the preliminary design for compatibility with available ratings of circuit breakers, fuses, and other devices. At this point, some modification of the design may be necessary because of economic considerations or equipment availability, or both.

The preliminary design should be evaluated from the standpoint of system coordination, as covered in Chapter 15. If the protective devices provided in the preliminary design cannot be selectively coordinated with utility protective device settings and contractual restrictions on protective device settings, the design should be modified to provide proper selective coordination.

Ground-fault protection is an essential part of system protection and is given detailed coverage in Chapter 8 for two reasons. First, although many of the devices used to obtain ground-fault protection are similar to those covered in Chapter 3 through Chapter 7, the need for such protection and the potential problems of improper application of ground-fault protection are frequently not fully appreciated. Second, proper selective coordination of

 Copyright © 2001 IEEE. All rights reserved.

Copyright The Institute of Electrical and Electronics Engineers, Inc.
Provided by IHS under license with IEEE
No reproduction or networking permitted without license from IHS Not for Resale

ground-fault protection seldom causes any change to overall system selectivity, although its effect should be taken into consideration in the same general manner covered in Chapter 15. In-depth coverage of system grounding can also be found in IEEE Std 142-1991.

Throughout the preliminary and final design process, the personal computer has become an indispensable tool in power system planning, analysis, and simulation of day-to-day operations. A number of power system software programs are available to assist the designer in evaluating protective device application and to assist in the proper selection and coordination of protective devices. Available software includes programs to evaluate and perform short circuit, protective device coordination, load flow, harmonic analysis, system stability, motor starting, and grounding. In-depth coverage of power system analysis can be found in IEEE Std 399-1997.

The designer of the protective system should bear in mind that the design consumes two critical and limited resources, space and money, and should take practical steps to ensure that these needs are fully recognized by the overall project team.

1.5 Basic protective equipment

The isolation of short circuits and overloads requires the application of protective equipment that senses when an abnormal current flow exists and then removes the affected portion from the system.

The three primary protective equipment components used in the isolation of short circuits and overloads are fuses, circuit breakers, and protective relays.

A fuse is both a sensing and interrupting device, but not a switching device. It is connected in series with the circuit and responds to thermal effects produced by the current flowing through it. The fusible element is designed to open at a predetermined time depending upon the amount of current that flows. Different types of fuses are available having time-current characteristics required for the proper protection of the circuit components. Fuses may be noncurrent-limiting or current-limiting, depending upon their design and construction. Fuses are not resetable because their fusible elements are consumed in the process of interrupting the current flow. Fuses and their characteristics, applications, and limitations are described in detail in Chapter 5 and Chapter 6.

Circuit breakers are interrupting and switching devices that require overcurrent elements to fulfill the detection function. In the case of medium-voltage (1–72.5 kV) circuit breakers, the sensing devices are separate current transformers (CTs) and protective relays or combinations of relays. These devices are covered in Chapter 4. For most low-voltage (under 1000 V) circuit breakers, (molded-case circuit breakers or low-voltage power circuit breakers) the sensing elements are an integral part of the circuit breaker. These trip units may be thermal or magnetic series devices; or they may be integrally mounted, but otherwise separate electronic devices used with CTs mounted in the circuit breaker. Low-voltage circuit breakers, their applications, characteristics, and limitations are covered in Chapter 7.

Copyright © 2001 IEEE. All rights reserved.

Copyright The Institute of Electrical and Electronics Engineers, Inc.
Provided by IHS under license with IEEE
No reproduction or networking permitted without license from IHS
Not for Resale

Overcurrent relays used in conjunction with medium-voltage circuit breakers are available with a range of different functional characteristics. Relays may be either directional or nondirectional in their action. Relays may be instantaneous and/or time-delay in response. Various time-current characteristics (e.g., inverse time, very inverse time, extremely inverse time, definite minimum time) are available over a wide range of current settings. Overcurrent relays and their selection, application, and settings are covered in detail in Chapter 4. Numerous other types of protective relays, used for specific protective purposes, are also discussed throughout this publication. Relays generally are used in conjunction with instrument transformers, which are covered in Chapter 3.

1.6 Special protection

In addition to developing a basic protection design, the designer may also need to develop protective schemes for specific equipment or for specific portions of the system. Such specialized protection should be coordinated with the basic system protection. Specialized protection applications include

— Conductor protection (see Chapter 9)
— Motor protection (see Chapter 10)
— Transformer protection (see Chapter 11)
— Generator protection (see Chapter 12)
— Bus and switchgear protection (see Chapter 13)
— Service supply-line protection (see Chapter 14)

1.7 Field follow-up

Proper application of the principles covered in the first 15 chapters of this recommended practice should result in the installation of system protection capable of coordinated selective isolation of system faults, overloads, and other system problems. However, this capability will be useless if the proper field follow-up is not planned and executed. Field follow-up has three elements: proper installation, including testing and calibration of all protective devices; proper operation of the system and its components; and a proper preventive maintenance program, including periodic retesting and recalibration of all protective devices. A separate chapter, Chapter 16, has been included to cover testing and maintenance.

1.8 References

This recommended practice shall be used in conjunction with the following standards. When the following standards are superseded by an approved revision, the revision shall apply.

Copyright © 2001 IEEE. All rights reserved.

--`,,`-`-`,,`,,`,`,,`---

Copyright The Institute of Electrical and Electronics Engineers, Inc.
Provided by IHS under license with IEEE
No reproduction or networking permitted without license from IHS Not for Resale

ASC C2-2002, National Electric Safety Code® (NESC®).[2]

IEEE Std 80-2000, IEEE Guide for Safety in AC Substation Grounding.[3]

IEEE Std 141-1993 (Reaff 1999), IEEE Recommended Practice for Electric Power Distribution for Industrial Plants *(IEEE Red Book)*.

IEEE Std 142-1991, IEEE Recommended Practice for Grounding of Industrial and Commercial Power Systems *(IEEE Green Book)*.

IEEE Std 241-1990 (Reaff 1997), IEEE Recommended Practice for Electric Power Systems in Commercial Buildings *(IEEE Gray Book)*.

IEEE Std 399-1997, IEEE Recommended Practice for Industrial and Commercial Power Systems Analysis (*IEEE Brown Book*).

IEEE Std 493-1997, IEEE Recommended Practice for the Design of Reliable Industrial and Commercial Power Systems (*IEEE Gold Book*).

NFPA 70-1999, National Electrical Code® (NEC®).[4]

NFPA 70E-2000, Electrical Safety Requirements for Employee Workplaces.[5]

---

[2]The NESC is available from the Institute of Electrical and Electronics Engineers, 445 Hoes Lane, P.O. Box 1331, Piscataway, NJ 08855-1331, USA (http://standards.ieee.org/).

[3]IEEE publications are available from the Institute of Electrical and Electronics Engineers, 445 Hoes Lane, P.O. Box 1331, Piscataway, NJ 08855-1331, USA (http://standards.ieee.org/).

[4]The NEC is published by the National Fire Protection Association, Batterymarch Park, Quincy, MA 02269, USA (http://www.nfpa.org/). Copies are also available from the Institute of Electrical and Electronics Engineers, 445 Hoes Lane, P.O. Box 1331, Piscataway, NJ 08855-1331, USA (http://standards.ieee.org/).

[5]NFPA publications are published by the National Fire Protection Association, Batterymarch Park, Quincy, MA 02269, USA (http://www.nfpa.org/).

Copyright © 2001 IEEE. All rights reserved.

Copyright The Institute of Electrical and Electronics Engineers, Inc.
Provided by IHS under license with IEEE
No reproduction or networking permitted without license from IHS
Not for Resale

--`,,`-`-`,,`,,`,`,,`---

Copyright The Institute of Electrical and Electronics Engineers, Inc.
Provided by IHS under license with IEEE
No reproduction or networking permitted without license from IHS

Not for Resale

Chapter 2
Short-circuit calculations

2.1 Introduction

Short-circuit currents can create massive destruction to the power system. Short circuits typically have magnitudes many times greater than load currents. The consequences of these high-magnitude currents can be catastrophic to normal operation of the power system. First, the presence of short-circuit currents in system conductors results in additional heating, which the system is usually not designed to sustain continuously. These currents also introduce severe mechanical forces on conductors, which can break insulators, distort transformer windings, or cause other physical damage. The flow of high-magnitude short-circuit currents through system impedances may also result in abnormally low voltages, which in turn lead to otherwise healthy equipment being forced to shut down. Finally, at the point of the short circuit itself, generally the release of energy in the form of an arc, if left uncorrected, can start a fire, which may spread well beyond the point of initiation.

Much of the effort of power system engineers and planners is directed toward minimizing the impact of short circuits on system components and the industrial process the system serves. It has been said that the only part of a power system that actually works is the protective devices that are called upon to detect and react to short circuits—and they only do something when something else goes wrong! This has led to the observation that power system engineers focus only on catastrophes. It is true that a great deal of power system engineering is devoted to the analysis of undesirable events, and nowhere is that statement more correct than in the application of protective devices.

Lord Kelvin observed that knowledge of a subject is incomplete until the subject can be accurately quantified. Of all the demands placed upon the power system protection engineer, the most analytical is to determine the magnitude of voltages and currents that the system can produce under various short-circuit conditions. Only when these quantities are understood can the application of protective devices proceed with confidence that they will perform their intended function when short circuits occur.

The most fundamental principle involved in determining the magnitude of short-circuit current is Ohm's Law: the current that flows in a network of impedances is related to the driving voltage by the relationship

$$I = \frac{E}{Z} \tag{2-1}$$

The general procedure for applying this principle entails the three steps involved in Thevenin's Theorem of circuits.

a) Develop a graphical representation of the system, called a one-line (or single-line) diagram, with symbolic voltage sources and circuit impedances.

Copyright © 2001 IEEE. All rights reserved.

Copyright The Institute of Electrical and Electronics Engineers, Inc.
Provided by IHS under license with IEEE
No reproduction or networking permitted without license from IHS
Not for Resale

b) Calculate the total impedance from the source of current (i.e., the driving voltage) to the point at which a hypothetical short-circuit current is to be calculated. This value is the Thevenin equivalent impedance, sometimes called the driving point impedance.

c) Knowing the open circuit prefault voltage, use Ohm's Law to calculate the short-circuit current magnitude.

Of course, the actual application of these basic principles is more involved, and the remainder of this chapter is devoted to a treatment of the specific details of short-circuit current calculations.

2.2 Types of short-circuit currents

From the point of view of functional application, four or more distinct types of short-circuit current magnitudes exist. The current of greatest concern flows in the system under actual short-circuit conditions and could (at least theoretically) be measured using some form of instrumentation. In reality, it is not practical to attempt to predict by calculation the magnitude of actual current because it is subject to a great many uncontrollable variables. Power system engineers have developed application practices, some of which are discussed in the following paragraphs, that predict worst-case magnitudes of current sufficient for application requirements.

The analyst or engineer may have several objectives in mind when a short-circuit current magnitude is calculated. Obviously, the worst-case current should be appropriate to the objective, and a set of assumptions that leads to a worst-case calculation for one purpose may not yield worst-case results for another purpose.

Short-circuit current magnitudes often must be calculated in order to assess the application of fuses, circuit breakers, and other interrupting devices relative to their ratings. These currents have labels (e.g., interrupting duty, momentary duty, close and latch duty, breaking duty), which correlate those magnitudes with the specific interrupter rating values against which they should be compared to determine whether the interrupting device has sufficient ratings for the application. ANSI standard application guides define specific procedures for calculating duty currents for evaluating fuses and circuit breakers rated under ANSI standards. Likewise, the International Electrotechnical Commission (IEC) publishes a calculation guide for calculating duty currents for IEC-rated interrupting devices. In either case, the important thing is that the basis for calculating the current be consistent with the basis for the device rating current so that the comparison is truly valid.

Related to interrupter rating currents are the currents used to evaluate the application of current-carrying components. Transformers, for example, are designed to have a fault withstand capability defined in terms of current, and transformer applications should be evaluated to assure that these thermal and mechanical limitations are being observed. Likewise, bus structures should be designed structurally to withstand the forces associated with short circuits, and this requires knowledge of the magnitude of available fault currents. Similarly, ground grids under electrical structures should be designed to dissipate fault currents without

 Copyright © 2001 IEEE. All rights reserved.

Copyright The Institute of Electrical and Electronics Engineers, Inc.
Provided by IHS under license with IEEE
No reproduction or networking permitted without license from IHS Not for Resale

causing excessive voltage gradients. In each case, it is necessary to calculate a fault magnitude in a fashion that is consistent with the purpose for which it is needed.

Another type of short-circuit current magnitude is used by protection engineers to assess the time-current performance of protective devices. Here, again, consistency is needed between the calculated currents and the currents that the protective devices measure. No universally accepted standards define how protective devices make measurements, and in fact measurable differences exist among manufacturers, among technologies, and even among design vintages of the same manufacturer and technology. However, protection engineers have evolved a series of generally accepted guidelines for which currents apply to which kinds of protective devices, and these guidelines are detailed in subsequent chapters.

Other references in the *IEEE Color Book Series*™ treat the application of interrupting devices. Accordingly, this chapter discusses only the calculation of short-circuit currents for evaluating the time-current performance of relays, fuses, low-voltage circuit breaker trip devices, and other protective equipment.

Another way of looking at short circuits is to consider the geometry of faults. Most modern power systems are three-phase and involve three power-carrying conductors. A fourth conductor, the neutral, may or may not carry load current depending upon the nature of the loads on the system. The number of conductors involved in the short circuit has a bearing on the severity of the fault as measured by the magnitude of short-circuit current; normally, a fault involving all three-phase conductors (called the three-phase fault) is considered the most severe. Other geometries include single phase-to-ground faults, phase-to-phase faults, double phase-to-ground faults, and open conductors.

2.3 The nature of short-circuit currents

Under normal system conditions, the equivalent circuit of Figure 2-1 may be used to calculate load currents. Three impedances determine the flow of current. Z_s and Z_c are the impedances of the source and circuit, respectively, while Z_l is the impedance of the load. The load impedance is generally the largest of the three, and it is the principle determinant of the current magnitude. Load impedance is also predominantly resistive, with the result that load current tends to be nearly in phase with the driving voltage.

A short circuit may be thought of as a conductor that shorts some of the impedances in the network while leaving others unchanged. This situation is depicted in Figure 2-2. Because Z_s and Z_c become the only impedances that restrict the flow of current, the following observations may be made:

a) The short-circuit current is greater than load current.

b) Because Z_s and Z_c are predominately inductive, the short-circuit current lags the driving voltage by an angle approaching the theoretical maximum of 90°.

Copyright © 2001 IEEE. All rights reserved.

--`,,`-`-`,,`,,`,`,,`---

Copyright The Institute of Electrical and Electronics Engineers, Inc.
Provided by IHS under license with IEEE
No reproduction or networking permitted without license from IHS
Not for Resale

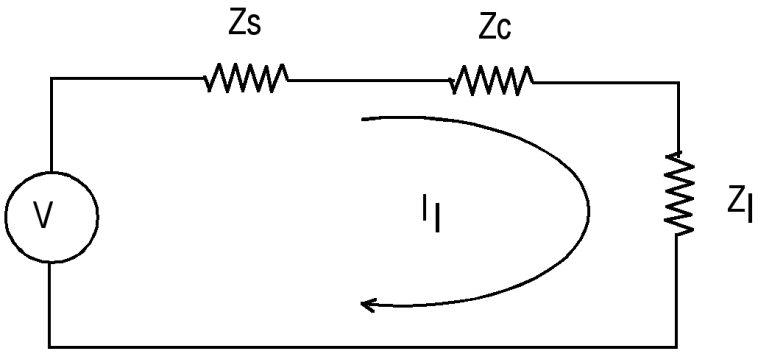

Figure 2-1—Equivalent circuit used to calculate load current in a normal circuit

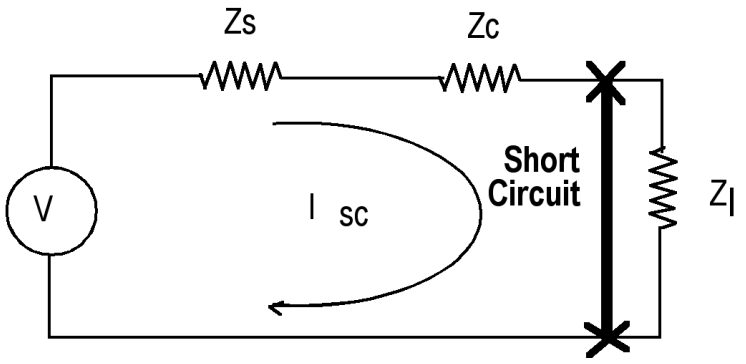

Figure 2-2—Equivalent circuit used to calculate short-circuit current

The change in state from load current to short-circuit current occurs rapidly. Fundamental physics demonstrate that the magnitude of current in an inductor cannot change instantaneously. This conflict can be resolved by considering the short-circuit current to consist of two components:

— A symmetrical ac current with the higher magnitude of the short-circuit current

— An offsetting dc transient with an initial magnitude that is equal to the initial value of the ac current, but which decays rapidly

The initial magnitude of the dc transient is directly controlled by the point on the voltage wave at which the short circuit occurs. If the short circuit occurs at the natural zero crossing of the driving voltage sinusoid, the transient is maximized. However, the transient is a minimum if the fault occurs at the crest of the voltage sinusoid. At any subsequent time, the magnitude of the dc transient is determined by the time constant of the decay of the dc, which is controlled by the ratio of reactance to resistance in the impedance limiting the fault. Equation (2-2) can be used to calculate the instantaneous magnitude of current at any time. For the protection engineer, the worst case initial current includes the full dc transient.

 Copyright © 2001 IEEE. All rights reserved.

Copyright The Institute of Electrical and Electronics Engineers, Inc.
Provided by IHS under license with IEEE
No reproduction or networking permitted without license from IHS Not for Resale

$$i(t) = \left(\frac{v}{Z_s + Z_c}\right)\left[\sin(wt + \varphi - \theta) - \sin(\varphi - \theta)e^{-\left(\frac{R}{L}\right)t}\right] \quad (2\text{-}2)$$

The driving voltage depicted in Figure 2-1 and Figure 2-2 is the Thevenin equivalent open-circuit voltage at the fault point prior to application of the short circuit. This voltage includes sources such as remote generators with voltage regulators that maintain their value regardless of the presence of a short circuit on the system as well as nearby sources whose voltages decay when the short circuit is present. The amount of decay is determined by the nature of the source. Nearby generators and synchronous motors with active excitation systems sustain some voltage, but because the short circuit causes their terminal voltage to drop, the current they produce is gradually reduced as the fault is allowed to persist. At the same time, induction motors initially participate as short-circuit current sources, but their voltages decay rapidly as the trapped flux is rapidly drained. Figure 2-3 shows the generic tendencies of various kinds of short-circuit current sources and a composite waveform for the symmetrical ac current decay. Figure 2-4 depicts the most realistic case of the decaying symmetrical ac current combined with the decaying dc transient. From this figure, a generalized short-circuit current may be described in the following terms:

— High initial magnitude dc transient component of current, which decays with time
— High initial magnitude symmetrical ac current, which diminishes gradually with time
— Symmetrical ac current lags driving voltage by a significant angle, approaching 90°

2.4 Protective device currents

It is the general practice to recognize three magnitudes of short-circuit current in applying protective devices. These magnitudes are fundamentally time-dependent and can be thought of as three points on the generic curve in Figure 2-4.

The first point is the initial magnitude and is considered by protection engineers to be the magnitude of current to which fast-acting protective devices respond. Instantaneous relays, fuses, and low-voltage circuit breaker trip devices are characterized as fast acting. In some instances this initial point includes the dc transient; in other instances, it does not. Whether the dc transient is recognized is determined by whether the protective device in question responds to dc quantities. For example, instantaneous relays operating on the induction principle, and static devices with dc filtering, respond only to the symmetrical ac component of this initial current, while fuses and plunger and hinged-armature relays sense the total magnitude of current. How the dc transient is treated is also subject to some interpretation. One traditional, conservative approach is to treat the initial current as though the magnitude

Copyright © 2001 IEEE. All rights reserved.

Copyright The Institute of Electrical and Electronics Engineers, Inc.
Provided by IHS under license with IEEE
No reproduction or networking permitted without license from IHS
Not for Resale

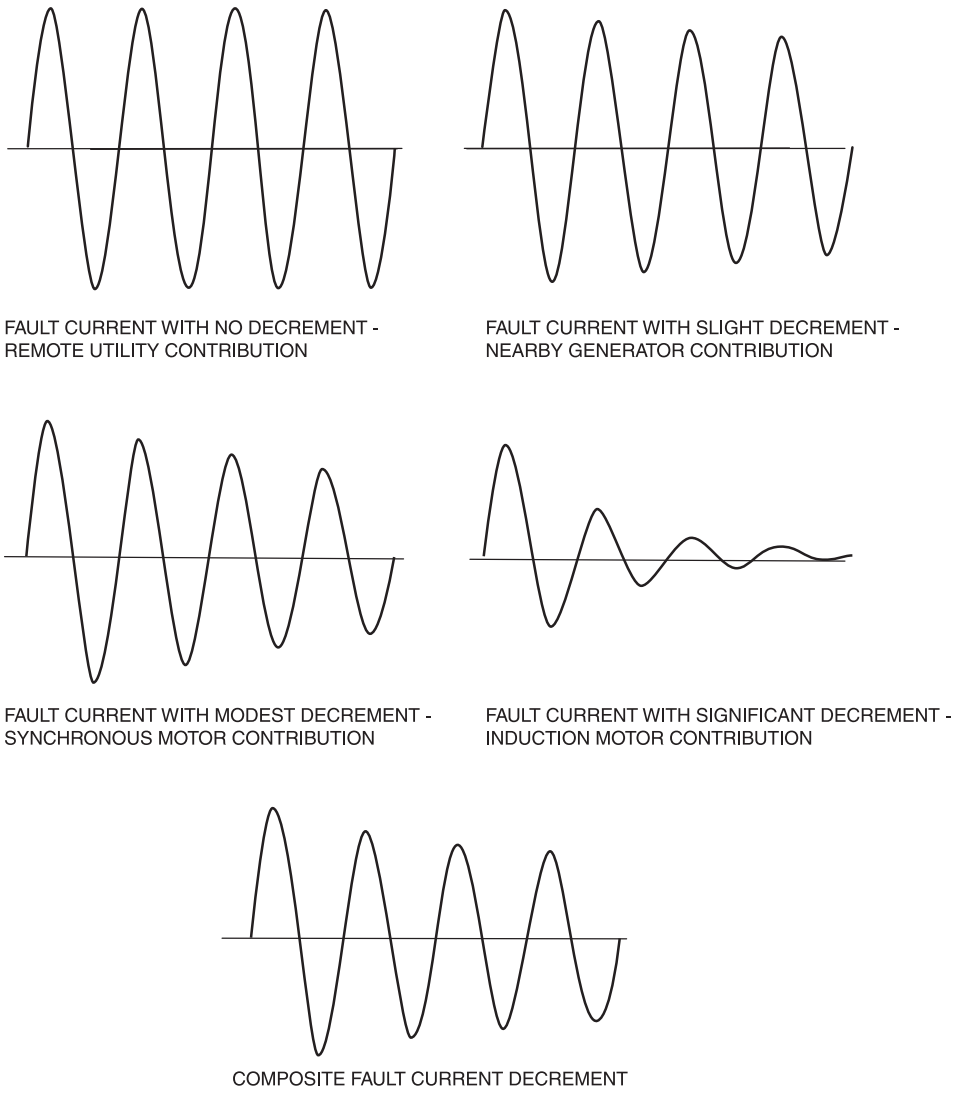

Figure 2-3—Generic components of fault current categorized according to decrement

Copyright © 2001 IEEE. All rights reserved.

Copyright The Institute of Electrical and Electronics Engineers, Inc.
Provided by IHS under license with IEEE
No reproduction or networking permitted without license from IHS
Not for Resale

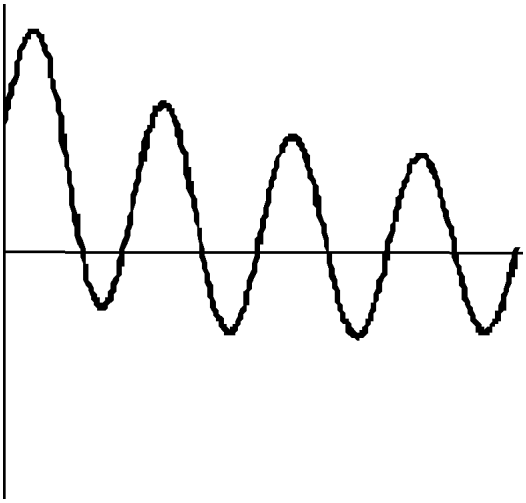

Figure 2-4—Typical fault current sinusoid with both ac and dc decrement

exists 0.5 cycle into the fault and, for typical systems where the *X*/*R* ratio is 25 or less, the root-mean-square (rms) total current does not exceed 1.6 times the symmetrical rms current. Some protection engineers choose instead to calculate an approximate asymmetry factor using the formula

$$\text{Asymmetry factor} = \sqrt{1 + 2e^{\frac{-2\pi}{X/R}}} \tag{2-3}$$

The second point is traditionally considered to be the magnitude of current at the time when time-delay overcurrent protective devices (e.g., overcurrent relays, delayed-action low-voltage trip devices) make their final measurement and operate. General practice assumes that the dc transient will have disappeared entirely by this time and to recognize only the rms symmetrical current.

The third current magnitude commonly calculated by protection engineers is the long-time current. Some protection engineers use the term “thirty (30) cycle current” because it is an estimate of the current that exists long after inception of the fault. This magnitude is used to evaluate performance of extremely long-time devices, such as generator backup overcurrent relays or second- or third-zone distance relays.

Determining the rates of decay of current to calculate these three time-based currents in exact form is difficult. The procedure that protection engineers have evolved is to represent the system using different impedances that result in short-circuit current magnitudes that are approximately close to the theoretically correct values. Table 2-1 summarizes common practices in this regard.

Copyright © 2001 IEEE. All rights reserved.

Copyright The Institute of Electrical and Electronics Engineers, Inc.
Provided by IHS under license with IEEE
No reproduction or networking permitted without license from IHS
Not for Resale

Table 2-1—Short-circuit impedances for protective device application and evaluation

Impedance	Instantaneous currents	Time-delay currents	Long-time currents
Remote system equivalent	R + **j**X	R + **j**X	R + **j**X
Local synchronous generators	R + **j**X"d	R + **j**X'd	R + **j**X
Synchronous motors	R + **j**X"d	R + **j**X'd	infinite
Induction motors	R + **j**X_{lr}	infinite	infinite
Passive components	R + **j**X	R + **j**X	R + **j**X

For conservatism, the usual practice is to employ saturated or rated-voltage reactances for rotating machines. These reactances are denoted by $_v$ on machine data sheets, e.g., $X \leq_{dv}$. Direct axis quantities are indicated by $_d$, while " and ' indicate subtransient and transient values, respectively. Full data sheets are not always available for induction machines, and in this instance using locked-rotor reactance X_{lr} is common practice.

While including both the resistive and reactive components of impedance is classically correct, protection engineers sometimes employ the shortcut of ignoring resistance because the *X*/*R* ratio of impedances is typically quite high. This shortcut is especially common in higher voltage applications and when hand calculations are employed to arrive at answers quickly. Analysts are cautioned that in lower voltage systems, however, *X*/*R* ratios are low and to ignore resistance may lead to calculation of unacceptably high current magnitudes.

Earlier, the distinction was made between short-circuit currents calculated to evaluate the application of interrupting devices against their ratings and calculations needed to assess protective device performance. Many engineers bring these calculations together, using so-called momentary application calculations instead of performing a separate instantaneous calculation. Likewise, 5-cycle-to-8-cycle interrupting duty calculations are frequently used instead of doing a separate calculation of time-delay currents.

NOTE—Some of the impedances given in Table 2-1 differ slightly from prevailing practices employed in calculating short-circuit currents for interrupting device evaluations. Such discrepancies suggest that the calculations are not exact and room for judgment exists.

In addition to time considerations, short circuits vary by topography. In some instances, all three phases of the power system are involved in the short circuit while, under other conditions, the fault may consist of only one phase shorting to ground. It is possible for phase-to-phase faults to occur; and, in yet other instances, the phase-to-phase fault may also involve a current flow to ground. Any of these four geometric variants may or may not be bolted faults, that is, short circuits in which the conductors are shorted together with essentially no external impedance. In the real world, most faults involve some external impedance (and in fact arcing introduces external resistance), but protection engineers usually consider bolted faults as the worst case for determining fault current magnitude.

Copyright © 2001 IEEE. All rights reserved.

Copyright The Institute of Electrical and Electronics Engineers, Inc.
Provided by IHS under license with IEEE
No reproduction or networking permitted without license from IHS Not for Resale

At times, determining the minimum currents available to system protective devices is necessary. No generally accepted procedure exists for determining minimum currents. One approach is to perform a system calculation considering only the electric utility source and any synchronous generators, with the latter represented by their synchronous reactance's (X_d), with allowance for presumed fault-point arcing represented by fault resistance.

In addition to short circuits, protection engineers may be called upon to evaluate performance of protective devices under other abnormal system conditions, such as open conductors.

2.5 Per-unit calculations

Power system calculations can be done using actual voltages and currents or using per-unit representations of actual quantities. While performing a calculation in actual quantities makes sense occasionally, the vast majority of calculations are done in per-unit. The discussion in this chapter assumes a familiarity with the per-unit method; but, to avoid confusion, definitions of important parameters are given in Table 2-2. The table presents strict (textbook) definitions and defines all per-unit values on a single-phase basis. Equivalent three-phase values are usually used in practice, but an understanding of the mathematics presented in Table 2-2 relies on a careful interpretation of base values as single-phase quantities.

Table 2-2—Per unit base parameters

Parameter	Strict definition (single-phase basis)	Common usage (three-phase basis)
Frequency	Steady state operating frequency	Nominal system frequency
Voltage	System line-to-neutral voltage at a chosen reference bus; voltage at other buses related by turns ratios of transformers	Nominal line-to-line voltage
MVA	Any defined arbitrary reference, per phase	10 or 100 MVA, 3ϕ
Base current	Base voltamperes divided by base voltage	Base 3ϕ kVA/(Line-to-line kV $\times \sqrt{3}$)
Base impedance	Base line to neutral voltage divided by base current	(Line-to-line kV)^2/Base 3ϕ MVA

2.6 Short-circuit current calculation methods

2.6.1 Symmetrical components method of analysis

A variety of methods are commonly used for calculating short-circuit current magnitudes. All of these methods are ultimately traceable to the method of symmetrical components, and an

Copyright © 2001 IEEE. All rights reserved.

Copyright The Institute of Electrical and Electronics Engineers, Inc.
Provided by IHS under license with IEEE
No reproduction or networking permitted without license from IHS
Not for Resale

understanding of symmetrical components permits a quick adoption of any of the short-hand procedures. The symmetrical components method of analysis is also completely general, can treat any form of fault or phase unbalance (with or without external impedances), and has become the one universal language among protection engineers. In the interest of exactness, only symmetrical components are treated in this chapter. The bibliography in 2.12 references papers and texts that discuss derivative approaches.

Almost all protective device short-circuit currents today are calculated by computer. It is well beyond the scope of this recommended practice to address the methods by which computers model electrical systems. Furthermore, each computer software program has unique features for which an adequate program users manual is the best reference text. A thorough understanding of symmetrical components should lead to comprehension of the intention of the computer software writer and maximize the functionality of most commercial programs.

2.6.2 Mathematical notation

Two mathematical symbols are used in this chapter. Most engineers recognize **j** as the square root of –1, but it also is used in power engineering as a mathematical operator that forces an angular shift of 90° upon whatever quantity to which it is applied. In treating three-phase power systems, also having an operator that introduces a 120° angular shift is convenient. This operator is conventionally known as ***a***.

With either operator, the convention considers the positive direction of phase rotation to be counterclockwise. This convention is depicted in Figure 2-5.

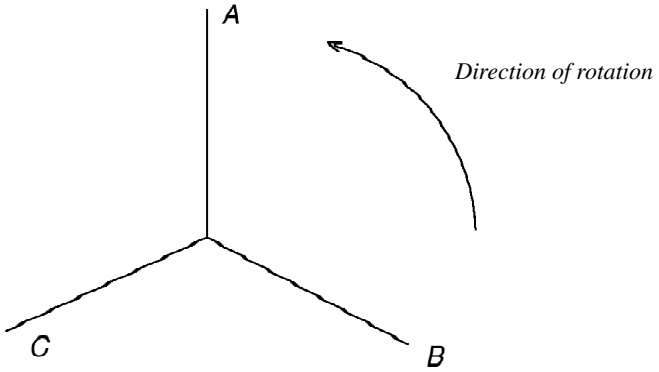

Figure 2-5—Phase designation and rotation conventions

2.7 Symmetrical components

The method of symmetrical components was first described in an AIEE paper by Fortescue [B5][1]. This paper proposed a general theory for analysis of multi-phase systems. Fortescue's

[1]The numbers in brackets correspond to the numbers of the bibliography in 2.12.

 Copyright © 2001 IEEE. All rights reserved.

Copyright The Institute of Electrical and Electronics Engineers, Inc.
Provided by IHS under license with IEEE
No reproduction or networking permitted without license from IHS Not for Resale

original thesis applied to a general ***n*** phase system, and its application on the more common three-phase systems is a simplification.

Phasors are complex time-dependent quantities used in analyzing linear systems that are described by both magnitude and angle. The voltage and current phasors on a three-phase power system can be represented by three sets of balanced three-phase symmetrical component phasors (voltage and current) when the symmetrical component phasors are defined according to a set of rules. Positive-sequence phasors (denoted by $_1$) are equal to each other in magnitude, are 120° apart, and have the same phase rotation sequence as the power system being represented. The negative-sequence phasors (indicated by $_2$) are equal to each other in magnitude and are 120° apart, but the phase rotation sequence is opposite to that of the power system under analysis. Zero-sequence phasors (which traditionally carry $_0$) are equal to each other in magnitude and are 360° apart; phase sequence rotation is the same as the power system.

For the three-phase application, phase-to-neutral voltages are defined in terms of the symmetrical components of voltage:

$$\begin{aligned} V_{ag} &= V_{a1} + V_{a2} + V_{a0} \\ V_{bg} &= \boldsymbol{a}^2 V_{a1} + \boldsymbol{a} V_{a2} + V_{a0} \\ V_{cg} &= \boldsymbol{a} V_{a1} + \boldsymbol{a}^2 V_{a2} + V_{a0} \end{aligned} \tag{2-4}$$

and conversely, the symmetrical components of voltage can be derived from the phase-to-neutral voltages,

$$\begin{aligned} V_{a1} &= \frac{1}{3}(V_{ag} + \boldsymbol{a} V_{bg} + \boldsymbol{a}^2 V_{cg}) \\ V_{a2} &= \frac{1}{3}(V_{ag} + \boldsymbol{a}^2 V_{bg} + \boldsymbol{a} V_{cg}) \\ V_{a0} &= \frac{1}{3}(V_{ag} + V_{bg} + V_{cg}) \end{aligned} \tag{2-5}$$

Similar equations can be written relating phase currents and the symmetrical components of current. The subscript convention used in Equation (2-4) and Equation (2-5) is that $_1$, $_2$, and $_0$ indicate positive, negative, and zero sequence, respectively, whereas $_{ag}$, $_{bg}$, and $_{cg}$ denote phase-to-ground.

Relating the sequence component current and voltage phasors are sequence component impedances. These impedances are not physical impedances, but as shown in 2.7.1, deriving values for them from known physical parameters of equipment is possible. Thus, for each of the three symmetrical components, drawing a system equivalent circuit is possible. By appropriately interconnecting these sequence impedance networks, making relatively simple network calculations, and then applying the fundamental relationships [Equation (2-4)],

Copyright © 2001 IEEE. All rights reserved.

--`,,`,,`-`-`,,`,,`,`,,`---

Copyright The Institute of Electrical and Electronics Engineers, Inc.
Provided by IHS under license with IEEE
No reproduction or networking permitted without license from IHS
Not for Resale

answers can be calculated for almost all unbalanced conditions on the original three-phase system.

When the base quantities are properly chosen, symmetrical components can be applied to a system of any frequency. However, using this analytical procedure in a single system to deal with multiple frequencies, as in harmonic or transient studies, is not strictly correct.

2.7.1 Sequence impedance representation of electrical apparatus

In order to use symmetrical components as a tool in analyzing systems and the performance of protective devices, constructing system models using symmetrical component representations is necessary. This step entails two considerations: It is necessary to determine, first, how each component of the actual power system should be represented in symmetrical component terms and, second, how these components are related together. Representation of system components is conceptually simple although some portions of the system may require time-consuming calculations.

The representation of electrical apparatus in symmetrical component terms involves determination of appropriate positive-, negative-, and zero-sequence impedances.

2.7.1.1 Generators

Positive-, negative-, and zero-sequence impedances are usually provided as identified values on the generator manufacturer's data sheet for the machine. If negative and zero are not readily available, a couple of guidelines may be used to approximate values.

The negative-sequence reactance of a synchronous generator is defined in Park's equations as the mean of the direct and quadrature axis subtransient reactances. For smooth rotor machines (i.e., 3600 r/min machines on 60 Hz systems), the direct and quadrature reactances are nearly equal; and in the absence of better data, the negative-sequence reactance may be assumed to be equal to the subtransient reactance.

Zero-sequence reactance is also defined in Park's equations, but the definition is more complex. For most machines, its value is on the order of one half of the subtransient reactance. When looking into the terminals of a generator (in the figurative sense), the actual zero-sequence impedance is a combination of the zero-sequence impedance of the generator plus the zero-sequence representation of the generator's neutral grounding device. Neutral grounding devices are treated separately.

Positive-sequence reactance is also usually available from the generator manufacturer's data sheet, but normally several values exist from which to choose. As noted in Table 2-1, the value to be used in a calculation of short-circuit currents depends upon the intended use of the result of that calculation.

The definitions given in Equation (2-5) for positive-, negative-, and zero-sequence voltage and current phasor sets also suggest another important consideration in the representation of synchronous machines in symmetrical component terminology. Positive-sequence voltages

 Copyright © 2001 IEEE. All rights reserved.

Copyright The Institute of Electrical and Electronics Engineers, Inc.
Provided by IHS under license with IEEE
No reproduction or networking permitted without license from IHS Not for Resale

correspond to actual system voltages and currents, whereas negative- and zero-sequence voltages are physically fictitious. Generators are a source of voltage on the power system, and the only sequence to include a voltage source is the positive sequence.

Induction generators are finding their way more commonly into both industrial and utility applications. Induction generators should be treated as induction motors for fault calculations.

2.7.1.2 Motors

Motors can be thought of as closely related to generators, and the impedances used to represent them in symmetrical components are derived similarly to those of generators. For synchronous motors, negative-sequence impedances values are readily available from manufacturer's data sheets; or if no better data are known, the value of the subtransient reactance may be used. For induction motors, however, negative-sequence values are harder to obtain. A common assumption, which is usually satisfactory, is that the negative-sequence reactance is equal to the locked-rotor reactance for induction motors.

As for generators, the zero-sequence impedance seen looking into the terminals of a motor is a combination of the zero-sequence impedance of the machine and the zero-sequence impedance of the neutral grounding devices. Consequently, because the neutral of motors is almost inevitably ungrounded, an infinite zero-sequence impedance for motors would be seen.

Table 2-1 also lists positive-sequence impedance values for motors. As for generators, the magnitude of impedance may vary depending on the use intended for the calculated values.

2.7.1.3 Transmission lines

Determining impedances for transmission lines is more challenging and generally involves making calculations from the physical parameters of the line and its conductors. The algorithm and equations given in this subclause describe the procedure, and experienced protection engineers find understanding the theoretical basis for this procedure helpful. All the equations given in this subclause are for 60 Hz systems; impedances for systems at other frequencies can be determined by ratio or by modifying the formulae. Alternatively, computer programs are available to calculate line impedances.

The first consideration is that the positive- and negative-sequence impedances of transmission lines are equal. A transmission line is a passive component that responds in the same way to positive- and negative-sequence excitation. Because sequence impedances are the relationships between respective sequence voltages and currents, calculation of one impedance suffices for both needs.

The positive-sequence reactance of a transmission line can be thought of as the impedance that would relate voltage and current when the three conductors or a transmission line are shorted together at one end, while excited by a positive-sequence source of voltages at the other end. This impedance can be calculated using the following equation:

Copyright © 2001 IEEE. All rights reserved.

Copyright The Institute of Electrical and Electronics Engineers, Inc.
Provided by IHS under license with IEEE
No reproduction or networking permitted without license from IHS Not for Resale

$$X_1 = \text{j}0.1737 \log_{10}\left[\frac{GMD}{GMR}\right]\Omega/\text{km} \quad (2\text{-}6)$$

where

GMD is the geometric mean spacing between phase conductors (e.g., the cube root of the product of the three-phase spacings) (m),
GMR is the geometric mean radius of the phase conductor (m).

GMD should be calculated for the specific spacings of the array of conductors making up the transmission line, while *GMR* is a parameter for the conductor that is available from the conductor manufacturer.

Positive-sequence resistance can be read directly from conductor tables.

Calculating the zero-sequence impedance of a transmission line is more challenging. The concept can be viewed as follows: All three phases of a transmission line are shorted together to ground at the source end, while all three conductors are shorted together and to both ground and the overhead ground wire (OHGW) at the other end. When a single phase source of voltage is then applied at the source end, a current flows. The ratio of the single-phase driving voltage to the resulting current flow is the zero-sequence impedance of the line.

Physically, current flows from the faulted conductor into both ground and the OHGW as depicted in Figure 2-6a; the current flows from the source out through the phase conductors and returns through a complex path consisting of the OHGW and the earth. From this physical picture, it is apparent that the zero-sequence impedance should, therefore, consist of three branches as indicated in Figure 2-6b: the zero-sequence impedance of the phase conductors, the zero-sequence impedance of the static wire return (OHGW), and the zero-sequence impedance of the earth return.

Values can be calculated for the various branches of Figure 2-6b using the following equations:

$$R_{a0} = \frac{1}{3}(R_a)\Omega/\text{km} \quad (2\text{-}7)$$

$$X_{a0} = \text{j}0.1737 \log_{10}\left[\frac{GMD_2}{GMR}\right]\Omega/\text{km} \quad (2\text{-}8)$$

$$R_m = 0.05928\ \Omega/\text{km} \quad (2\text{-}9)$$

$$X_m = \text{j}0.1737 \log_{10}\left[\frac{D_e}{GMD_2}\right]\Omega/\text{km} \quad (2\text{-}10)$$

$$D_e = 658.4\sqrt{\frac{r}{f}}\ \text{m} \quad (2\text{-}11)$$

Copyright © 2001 IEEE. All rights reserved.

Copyright The Institute of Electrical and Electronics Engineers, Inc.
Provided by IHS under license with IEEE
No reproduction or networking permitted without license from IHS
Not for Resale

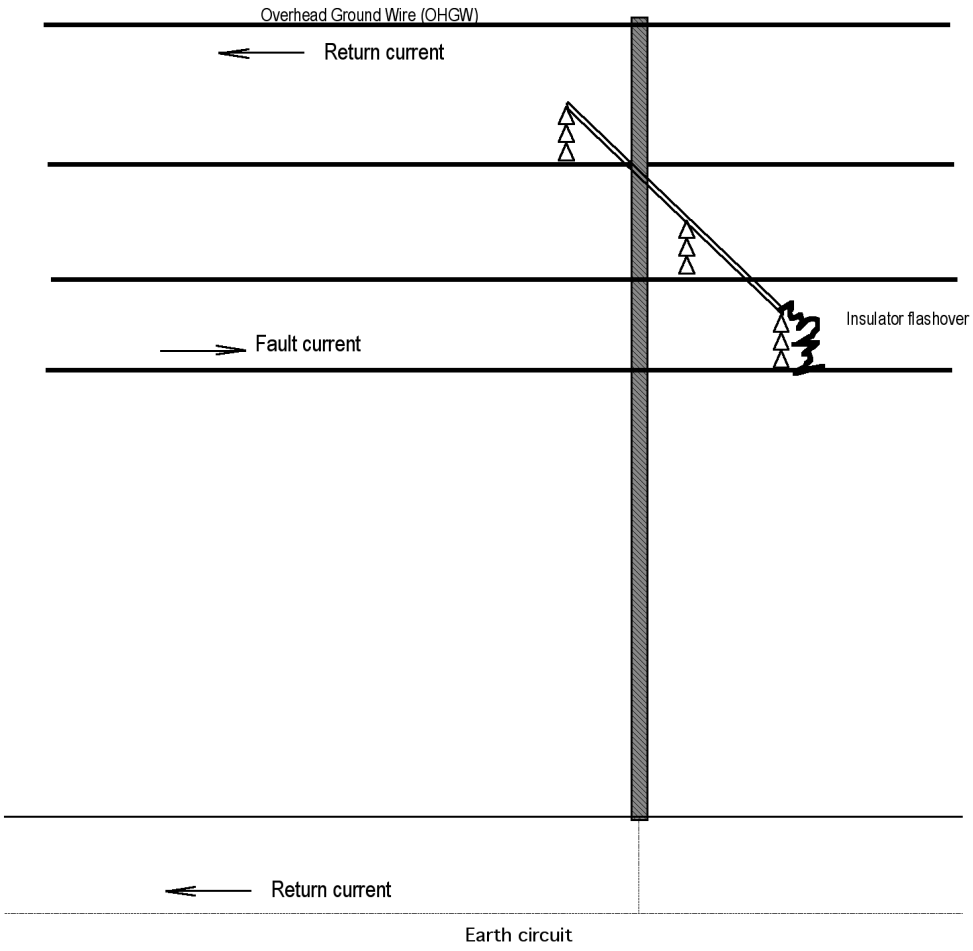

Figure 2-6a—Illustration of insulation flashover on open wire line showing return current flowing through OHGW of transmission line and through earth

$$R_g = \frac{R_{gw}}{k}\Omega/\text{km} \tag{2-12}$$

$$X_g = \text{j}0.1737 \log_{10}\left[\frac{GMD_2}{GMR_2}\right]\Omega/\text{km} \tag{2-13}$$

where

R_a is the resistance of the phase conductor (Ω/km),
GMD_2 is the geometric mean spacing of all conductors—phase and static (OHGW) wires (m),
GMR_2 is the geometric mean radius of k static (OHGW) wires (m),

Copyright © 2001 IEEE. All rights reserved.

Copyright The Institute of Electrical and Electronics Engineers, Inc.
Provided by IHS under license with IEEE
No reproduction or networking permitted without license from IHS
Not for Resale

k is the number of static (OHGW) wires,
r is the earth resistivity (typically 100) (Ω·m),
R_{gw} is the resistance of one ground wire (Ω/km),
f is the system frequency.

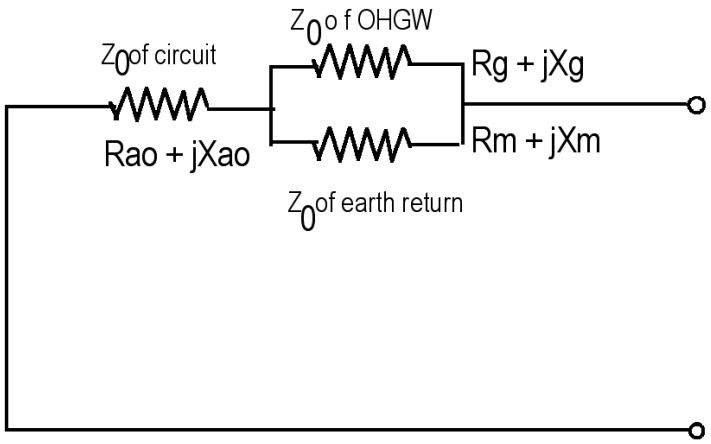

Figure 2-6b—Zero-sequence equivalent circuit that accounts for self impedance of transmission line and the impedances of earth and OHGW return paths

2.7.1.4 Cables, busway, and bus duct

Most analysts are satisfied to rely on the impedance data on cables, busway and bus duct that are provided by manufacturers. Two situations exist, however, where this reliance may not be adequate. For systems consisting of an array of single conductor cables, Equation (2-6) or Equation (2-7) should be used, with the spacing between individual conductors accounted for as the *GMD*. If multiple conductors exist per phase, care should be taken to evaluate the impact of the arrangement of conductors and to consider that the *GMR* of each phase is a composite of the true conductor *GMR* and the spacing of the conductors making up the phase.

Zero-sequence reactances for cables, bus, and busway are difficult to determine because they depend on the return path impedance as shown in Figure 2-6a and Figure 2-6b. Obviously, no OHGW return exists, but consideration should be given to the cable sheath, shield wire, conduit, cable tray, earth path, and other conducting paths involving building steel and fluid piping in the vicinity. An exact calculation is generally not possible. When low-resistance grounding is used in medium-voltage systems, determining the exact zero-sequence impedance of a cable or bus system is seldom necessary because it is negligible when compared to the grounding resistor.

2.7.1.5 Transformers

As a passive device, the positive- and negative-sequence impedance magnitudes for transformers are identical and are equal to the nameplate leakage reactance provided by the manufacturer. However, in modeling transformers in symmetrical components, recognizing

Copyright © 2001 IEEE. All rights reserved.

Copyright The Institute of Electrical and Electronics Engineers, Inc.
Provided by IHS under license with IEEE
No reproduction or networking permitted without license from IHS
Not for Resale

that an inherent phase shift is associated with delta-connected windings is sometimes necessary. Wye-delta and delta-wye transformers built under ANSI standards are designed so that high-voltage quantities always lead the corresponding low-voltage quantities by 30°. The complete positive-sequence model for a delta-wye or wye-delta transformer, therefore, should include a 30° phase shift. Negative-sequence quantities, however, are shifted in the opposite direction, and so the negative-sequence representation should include a phase shift opposite to the shift considered in positive sequence. These relationships are illustrated in Figure 2-7a. Inclusion of these phase shifts is important only if a rigorous calculation is needed to determine exact phase currents and voltages on both sides of the transformer, including phase angles. Analysts often take the shortcut of neglecting phase shifts if the calculations are restricted to determining information on only one side of the transformer. No inherent phase shift occurs in wye-wye transformers; therefore, the positive- and negative-sequence equivalent circuits for these transformers also do not require phase shifts.

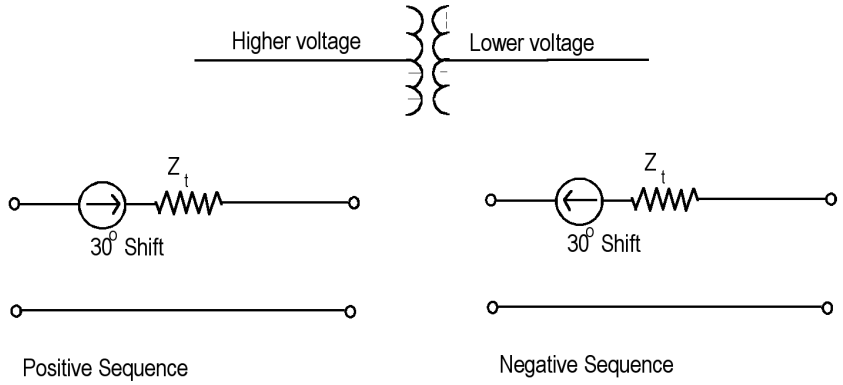

NOTES
1—The phase shift in positive sequence is in the same direction as in the physical transformer: high voltage leads low voltage by 30° for ANSI standard transformers.
2—The phase shift in the negative-sequence circuit is opposite in direction.

Figure 2-7a—Positive- and negative-sequence equivalent circuits for delta-wye or wye-delta transformer

The zero-sequence impedance of a transformer is controlled by a number of factors. The best way to determine a magnitude of this impedance is by an actual test, but the following comments, supplemented by information in some of the references, may be used to predict a value that is close enough for many applications. First, the zero-sequence impedance seen looking into a transformer depends upon the configuration of the winding. The zero-sequence impedance of a delta winding is infinite (an open circuit), whereas the zero-sequence impedance of a wye-connected winding is a series composite of the zero-sequence impedance of the transformer and the impedance of any neutral grounding devices that might be present. Thus, an ungrounded wye winding would present an infinite zero-sequence impedance because the absence of a neutral grounding connection appears as an open circuit in series with the zero-sequence impedance of the transformer winding itself (see Figure 2-7b). The impedance of the transformer itself depends upon several factors in the construction of the transformer. Three-phase transformers, which are constructed so that a closed, low-impedance

Copyright © 2001 IEEE. All rights reserved.

Copyright The Institute of Electrical and Electronics Engineers, Inc.
Provided by IHS under license with IEEE
No reproduction or networking permitted without license from IHS
Not for Resale

path exists for the flow of zero-sequence flux within the transformer, have a lower zero-sequence impedance than transformers without such a path. One such path is the transformer core. Transformers with core-form construction have lower zero-sequence impedances than units with shell-form cores. Three-phase transformers with delta windings have the lowest zero-sequence impedance, and in the absence of actual test data, it is often assumed that the zero-sequence impedance of core-form transformers with delta windings is about 0.85 times the positive-sequence leakage reactance of such transformers. The zero-sequence impedance of shell-form transformers has about the same magnitude as the positive-sequence leakage reactance of such transformers. Conversely, a three-phase transformer bank consisting of three, single-phase transformers connected wye-wye has a very high zero-sequence impedance.

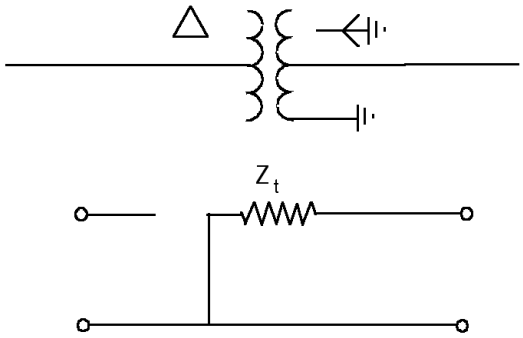

NOTE—The circuit is open on the side corresponding to the delta winding on the physical transformer.

Figure 2-7b—Zero-sequence equivalent circuit for delta-wye-grounded transformer

2.7.1.6 Neutral grounding devices

Neutral grounding devices such as resistors and reactors appear only in zero sequence. Figure 2-8 shows that if zero-sequence current I_0 is flowing in each phase conductor, then the current in the neutral device is $3I_0$. Representing the neutral device in zero sequence with a resistance or reactance equal to three times the actual device impedance accounts for the correct sequence voltage from neutral to ground.

2.8 Network interconnections

The most critical aspect of using symmetrical components is in interconnecting the system sequence impedance networks. The form that this interconnection should take is determined by the type of fault to be calculated. Many possible interconnections exist, and several of the references in 2.11 include extended discussions of how these interconnections are derived as well as tables of many of the possible combinations. For this recommended practice, however, presenting only the four interconnections representing the fault interconnections most commonly of interest is sufficient.

 Copyright © 2001 IEEE. All rights reserved.

Copyright The Institute of Electrical and Electronics Engineers, Inc.
Provided by IHS under license with IEEE
No reproduction or networking permitted without license from IHS Not for Resale

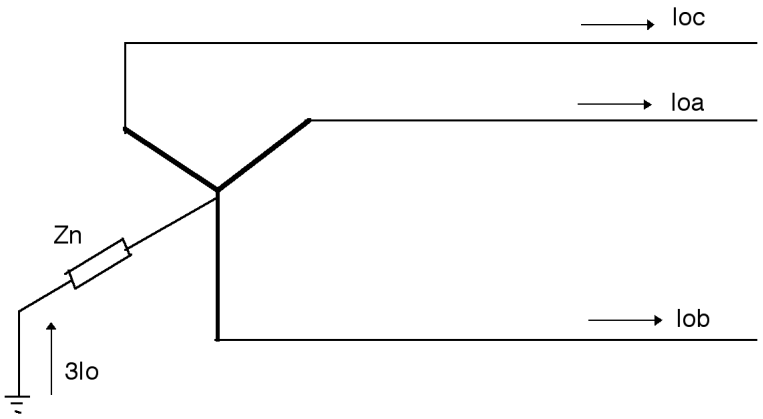

NOTE—Because zero sequence, by definition, is equal in magnitude and displaced 360° in the three phases, the current that shall flow in a neutral grounding circuit is $3I_0$. Therefore, to assure that the zero-sequence voltage drop in the equivalent circuit is correct, the physical impedance of the neutral circuit shall be multiplied by 3 in the zero-sequence equivalent circuit:

$$V_{drop} = 3I_0 \times Z_n = I_0 \times 3Z_n$$

Figure 2-8—Zero sequence representation of neutral grounding devices

Each of these interconnections relate how the positive-, negative-, and zero-sequence networks should be connected together to represent the desired system condition. The sequence impedance networks themselves are the one-line diagrams of the system showing the impedances of the respective sequence. An important concept is that positive sequence is defined as the balanced phasors rotating in the direction of rotation of the actual phase quantities on the power system; in the vast majority of cases, only the positive-sequence network includes voltage sources.

2.8.1 Balanced three-phase conditions

Balanced three-phase condition is by far the most common sequence interconnection because not only can it be used to analyze three-phase short circuits, it also is the correct representation for balanced three-phase load conditions.

Figure 2-9 is the interconnection for balanced three-phase conditions. Because the system condition of interest is balanced, nothing of interest takes place in the negative- and zero-sequence networks of the system and they may be ignored.

The impedance indicated Z_f is the fault impedance. In a true bolted fault situation, this impedance is negligibly small. In other cases, this impedance may be the impedance of a load, and the calculation would represent balanced three-phase load conditions.

Copyright © 2001 IEEE. All rights reserved.

Copyright The Institute of Electrical and Electronics Engineers, Inc.
Provided by IHS under license with IEEE
No reproduction or networking permitted without license from IHS
Not for Resale

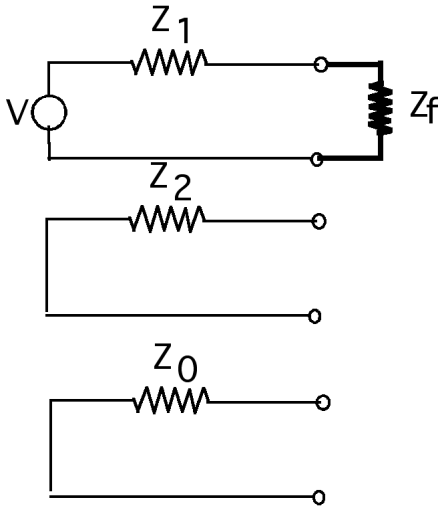

Figure 2-9—Sequence interconnections for a balanced three-phase fault, which involve only positive-sequence quantities

2.8.2 Phase-to-phase short circuits

Faults involving abnormal conduction from one phase to another without involving ground may be represented using the interconnection of Figure 2-10. The zero-sequence network is not involved and may be ignored.

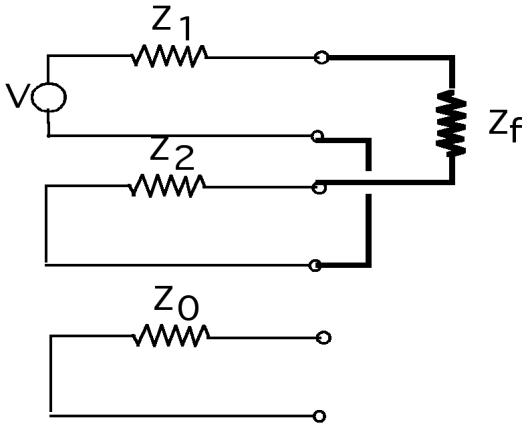

Figure 2-10—Sequence interconnections for a phase-to-phase fault not involving ground

As for the three-phase condition, Z_f would normally be the fault impedance, but it could also be a phase-to-phase load impedance if the problem of interest is the response of the system to a phase-to-phase-connected single-phase load.

Copyright © 2001 IEEE. All rights reserved.

Copyright The Institute of Electrical and Electronics Engineers, Inc.
Provided by IHS under license with IEEE
No reproduction or networking permitted without license from IHS
Not for Resale

An interesting and often useful relationship develops from Figure 2-10. In the special case of a zero-impedance phase-to-phase fault, if the negative-sequence impedance of nearby synchronous machines is approximately equal to the positive-sequence impedances of such machines or if no synchronous generators are nearby at all, then the phase-to-phase fault current will be $\sqrt{3}/2$, or 0.87 times the corresponding three-phase fault current. This relationship can be proven by calculating sequence currents in Figure 2-10 for the specified condition and then converting them to phase currents using Equation (2-4).

2.8.3 Phase-to-ground short circuits

The phase-to-ground short circuit is perhaps the most used interconnection because the line-to-ground fault is statistically the most common fault geometry. Figure 2-11 shows that to represent a single line-to-ground condition, the three sequence networks are connected in series at the point of the fault.

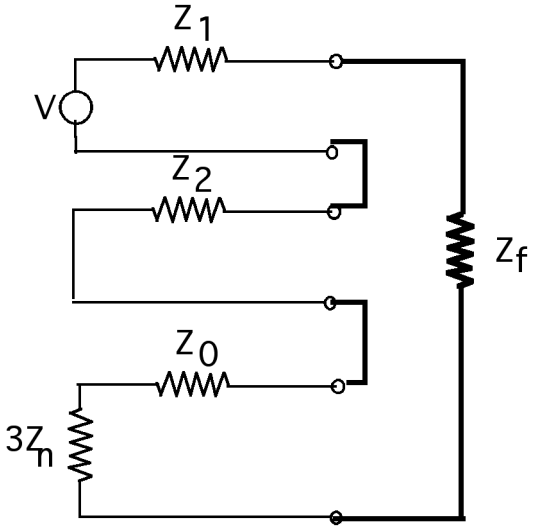

NOTE—To account for neutral grounding equipment, $3Z_n$ has been included. In a solidly grounded system, $Z_n = 0$.

Figure 2-11—Sequence interconnections for a single phase-to-ground fault

Several important observations exist about the use of this interconnection. First, because the zero-sequence network contains an open-circuit anywhere the actual system has a delta-connected or ungrounded-wye transformer winding, examining the zero-sequence network is necessary only for the portion of the system associated with the fault and bounded by delta-connected or ungrounded-wye transformer windings. Second, because the positive- and negative-sequence impedances are equal for almost every device, the negative-sequence network is often not represented in detail. Instead, once a value for the positive-sequence impedance at the point of fault is determined, this value is substituted for the negative sequence also. From this substitution, the current in the interconnected circuit becomes

Copyright © 2001 IEEE. All rights reserved.

Copyright The Institute of Electrical and Electronics Engineers, Inc.
Provided by IHS under license with IEEE
No reproduction or networking permitted without license from IHS
Not for Resale

$$I = \frac{V}{(2Z_1 + Z_0 + 3Z_n)} \tag{2-14}$$

$$I_{gf} = 3I_0 = \frac{3V]}{(2Z_1 + Z_0 + 3Z_n)} \tag{2-15}$$

A second consideration is that on systems where the neutral is grounded through a resistor designed to limit the fault current to a low value, the magnitude of the resistance in terms of zero sequence is so large that all other impedances in the network are insignificant by comparison. Thus, in these cases, calculating a formal symmetrical component to determine ground-fault current magnitudes is usually not necessary.

2.8.4 Open phase

Open phase is not a short-circuit condition, but it does fall under the generic definition of a fault. Figure 2-12 shows that interconnecting the positive- and negative-sequence networks at the point of the open phase, with the networks complete on both sides of the discontinuity, enables simplified calculations of the condition.

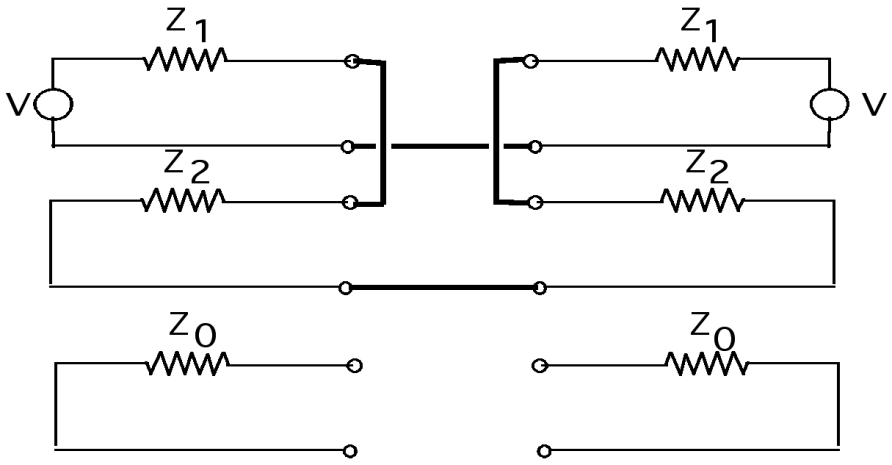

NOTE—The sequence networks on the right and left are the respective Thevenin equivalents looking in those directions.

Figure 2-12—Sequence interconnection used to model a single open-phase condition

Copyright © 2001 IEEE. All rights reserved.

Copyright The Institute of Electrical and Electronics Engineers, Inc.
Provided by IHS under license with IEEE
No reproduction or networking permitted without license from IHS
Not for Resale

2.9 Calculation examples

IEEE Std 399-1997[2] introduced a composite one-line diagram for a typical power system to illustrate a variety of analytical principles on a single system (see Figure 2-13 in this recommended practice).

The process of calculating protective device fault levels requires a series of steps. Today, most analysts choose to perform these calculations using computers, and the procedure outlined in Item a) through Item h) assumes that computers are used. However, the basic principles apply to manual calculations although the analyst in that instance should be more careful to decide up front precisely what information is needed in order to minimize the amount of tedious work to be done.

a) *State the problem to be solved*. The nature of the problem determines the type of calculation to be done and, in turn, dictates what specific data are required. In the present context, the calculation is of fault currents for protective devices. However, unlike fault calculations for breaker applications, protective device calculations generally are not done for every bus. For illustration, the following examples should be calculated:
   1) **Example A:** Maximum three-phase instantaneous relay current in the 2 Mvar 13.8 kV power factor capacitor feeder on Bus 4.
   2) **Example B:** Phase-to-ground-fault current at the receiving end of one of the 69 kV incoming circuits from the utility (i.e., a fault on the primary bushings of Transformer T-1).
   3) **Example C:** Phase-to-ground-fault current at the secondary terminals of 1.5 MVA Unit Substation T-5.

b) *Collect data*. This step entails understanding the interconnection of the various components that make up the system, as well as collecting data on each of the components. For example, Figure 2-13 includes information on transformer connection that is essential in determining ground fault levels. A one-line diagram is usually an essential tool in correlating system data, and some analysts choose to use the one-line diagram as the principal tool for recording all the data.

c) *Put aside information that does not apply to the immediate problem*. Generally, power factor capacitors, surge arresters, and surge capacitors do not contribute to the distribution of fault current as recognized by protection engineers, so these components may be ignored.

   More generally, however, some information may affect the magnitude of protective device currents, but not necessarily the currents of interest in the immediate problem; and in the interest of saving time, ignoring these data may be possible. A good example of this type of data is zero-sequence data. Delta-connected transformers establish boundaries for zero-sequence calculations; and, if the problem statement calls for ground-fault data in only one area of the system, entanglement with zero-sequence data in other areas may be avoided. In the illustration, ground-fault data are required at the 69 kV bus at the secondary of Substation T-5; therefore, the analyst may, if desired, choose to ignore zero-sequence data elsewhere in the system.

[2]Information on references can be found in 2.11.

Copyright © 2001 IEEE. All rights reserved.

Copyright The Institute of Electrical and Electronics Engineers, Inc.
Provided by IHS under license with IEEE
No reproduction or networking permitted without license from IHS
Not for Resale

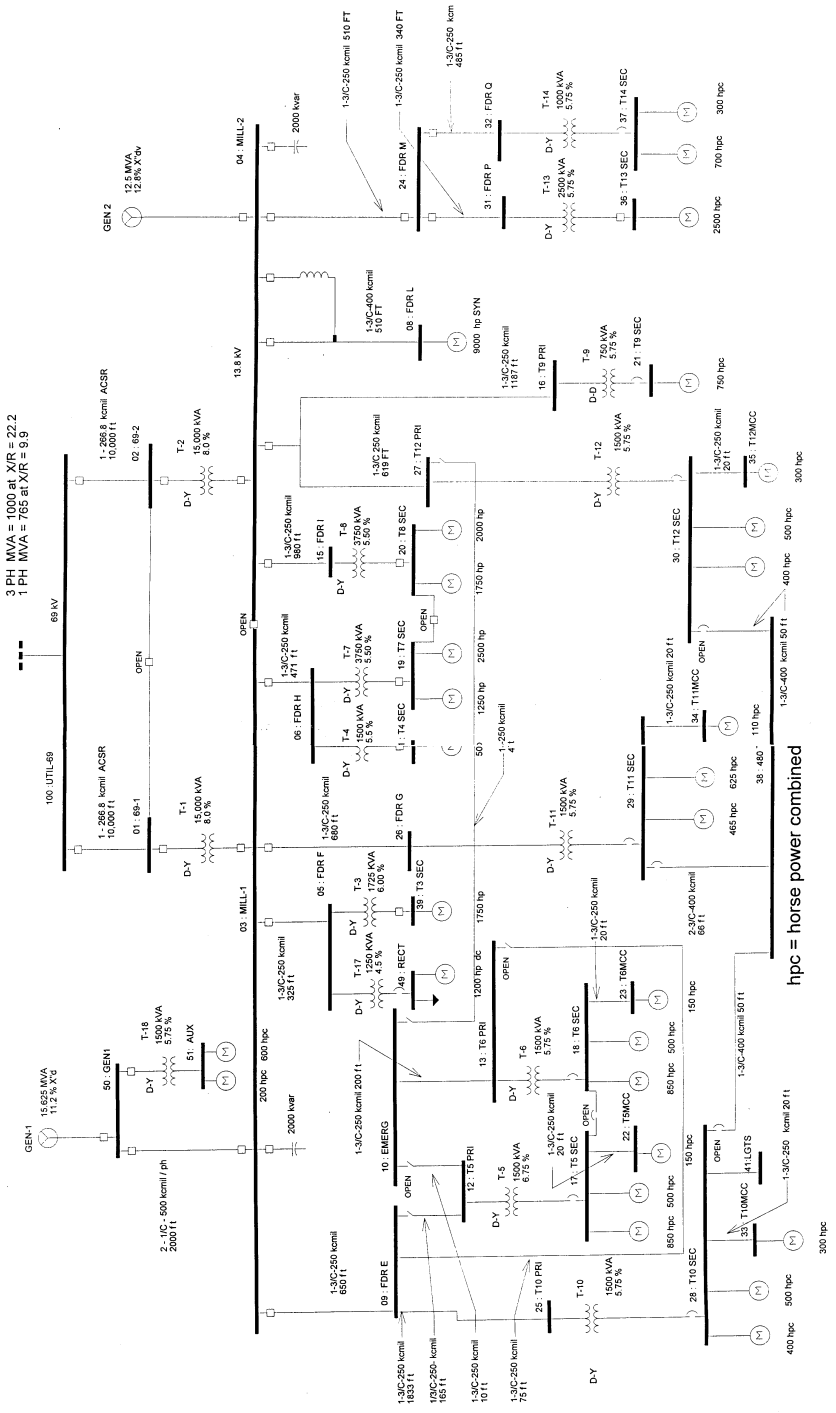
3 PH MVA = 1000 at X/R = 22.2
1 PH MVA = 765 at X/R = 9.9
69 kV
100: UTIL-69
13.8 kV
01: 69-1
02: 69-2
03: MILL-1
04: MILL-2
GEN-1
15.625 MVA
11.2 % X'd
GEN 2
12.5 MVA
12.8% X'dv
50: GEN1
51: AUX
T-1
T-2
T-18
1500 kVA
5.75 %
15,000 kVA
8.0 %
2000 kvar
1-266.8 kcmil ACSR
10,000 ft
2-1/C - 500 kcmil / ph
2000 ft
1-3/C-250 kcmil
325 ft
200 hpc
600 hpc
OPEN
05: FDR F
06: FDR H
07: FDR G
08: FDR L
09: FDR E
10: EMERG
1-3/C-250 kcmil
680 ft
1-3/C-250 kcmil
471 ft
1-3/C-250 kcmil
980 ft
1-3/C-400 kcmil
510 FT
1-3/C-250 kcmil
1187 ft
1-3/C-250 kcmil
619 FT
1-3/C-250 kcmil
200 ft
1-3/C-250 kcmil
650 ft
1-3/C-250 kcmil
1833 ft
1/3/C-250- kcmil
165 ft
1-3/C-250 kcmil
10 ft
1-3/C-250 kcmil
70 ft
1-250 kcmil
4 ft
T-3
T-4
T-5
T-6
T-7
T-8
T-9
T-10
T-11
T-12
T-13
T-14
T-17
1750 KVA
6.00 %
3500 kVA
5.5 %
1500 kVA
6.75 %
3750 kVA
5.50 %
750 kVA
5.75 %
2500 kVA
1000 kVA
1250 kVA
4.5 %
38: T3 SEC
39: RECT
1200 hp dc
1750 hp
1: T4 SEC
19: T7 SEC
20: T8 SEC
21: T9 SEC
2500 hp
1250 hp
1750 hp
2000 hp
12: T5 PRI
13: T6 PRI
16: T9 PRI
25: T10 PRI
27: T12 PRI
18: T6 SEC
17: T5 SEC
28: T10 SEC
29: T11 SEC
30: T12 SEC
23: TSMCC
33: T10MCC
34: T11MCC
35: T12MCC
14: LGTS
1-3/C-250 kcmil 20 ft
1-3/C-400 kcmil 50 ft
2-3/C-400 kcmil
66 ft
1-3/C-250 kcmil 20 ft
1-3/C-250 kcmil 20 ft
1-3/C-250 kcmil 20

d) *Decide on a common base for the per-unit calculations*. Base quantities selected for this sample system are as follows:

MVA base:	100 MVA three phase
KV Base:	69 kV line to line at 69 kV buses
	13.8 kV line to line at 13.8 kV buses
	4.16 kV line to line at 4.16 kV buses
	2.4 kV line to line at 2.4 kV buses
	0.480 kV line to line at 480 V buses
Frequency base:	60 Hz

e) *Convert component impedances to per-unit values on the appropriate base quantities*. These per-unit values should be arranged in the fashion required by the computer software. For a manual calculation, they should be recorded on a one-line diagram. Computer software usually accepts nominal nameplate parameters and performs this tedious and exacting task.

f) *Perform the network reduction calculations necessary to arrive at driving-point positive- and zero-sequence impedance values at each point of interest defined by the original statement of the problem*. Using these driving-point impedances, the sequence impedance network interconnections discussed in 2.8 should be set up to calculate per-unit magnitudes of sequence currents. Finally, these per-unit values should be converted into ampere values. Again, this tedious, time-consuming calculation is most often done with the computer today.

g) *Set up the sequence impedance connections needed for the desired currents*. Again, many computer programs can do this step automatically, but it is instructive to take raw driving-point impedances and perform this step by hand. For illustration, the phase-to-ground-fault current at the secondary of Transformer T-5 [see Example C in 2.9 a) Item 3)] is calculated manually in 2.9.1 and 2.9.2.

h) *Record the calculated currents*. This step is often overlooked although it is extremely important.

2.9.1 Computer model of the example system

For the sample one-line diagram in Figure 2-13, the system data were modeled using a computer program to calculate relay currents. The program used to develop these illustrations offers graphical output, showing relay currents and necessary system information directly on segments of the one-line diagram. The practice of displaying current magnitudes, and direction of flow, on the one-line diagram is especially useful to the protection engineer and was commonly done even when the primary tools for performing calculations were the pencil and a slide rule.

Rather than provide sample hand calculations, which are difficult to follow, subclause 2.9.2 indicates only the input data for the system of Figure 2-13. The system can then be modeled using a computer, and the sample problems can be calculated. Data for the sample system are presented in Table 2-3a through Table 2-3h.

Copyright © 2001 IEEE. All rights reserved.

Copyright The Institute of Electrical and Electronics Engineers, Inc.
Provided by IHS under license with IEEE
No reproduction or networking permitted without license from IHS
Not for Resale

Table 2-3a—Sample system input: utility data

Ident	Bus	kV	3f MVA	X/R	f -G MVA	X/R
UTIL-1	100:UTIL-6	69.000	1000.00	22.20	765.00	9.70

Table 2-3b—Sample system input: generator data

Ident	Bus	MVA	kV	RPM	pf	%X"	f-G %X	X/R
GEN-1	50: GEN-1	15.625	13.800	3600	0.80	11.2	5.70	35.7
GEN-2	04: MILL-2	12.5	13.800	3600	0.80	12.8	5.80	37.4

Table 2-3c—Sample system input: motor data

Ident	Bus	hp	kVA	Type	RPM	pF	kV	%X	X/R	EZ-Code
M-30	51: AUX	200	200	IND	1800		0.48	16.7	7.0	>50
M-31	51: AUX	600	600	IND	1800		0.48	16.7	12.0	<50
M-FDR-L	08: FDR L	9000	9000	SYN	1800	0.80	13.80	20.0	34.0	Synch
M-T10-1	28: T10 SEC	400	400	IND	1800		0.48	16.7	10.0	>50
M-T10-2	28: T10 SEC	500	500	IND	1800		0.48	16.7	5.0	>50
M-T1--3	33: T10MCC	300	300	IND	1800		0.48	16.7	12.0	<50
M-T11-1	29: T11 SEC	625	625	IND	1800		0.48	16.7	10.0	>50
M-T11-2	29: T11 SEC	465	465	IND	1800		0.48	16.7	5.0	<50
M-T11-3	34: T11MCC	110	110	IND	1800		0.48	16.7	7.0	<50
M-T12-1	30: T12 SEC	400	400	IND	1800		0.48	16.7	12.0	>50
M-T12-2	30: T12 SEC	500	500	IND	1800		0.48	16.7	5.0	<50
M-T12-3	35: T12MCC	300	300	IND	1800		0.48	16.7	12.0	<50
M-T13-1	36: T13 SEC	2500	2500	IND	1800		2.30	16.7	32.85	>50
M-T14-1	37: T14 SEC	700	700	IND	1800		0.48	16.7	12.0	>50
M-T14-2	37: T14 SEC	300	300	IND	1800		0.48	16.7	5.0	<50
M-T17-1	49: RECT	1200	1200	IND	1800		0.46	29.9	8.0	<50
M-T3-1	39: T3 SEC	1750	1662.5	IND	1800		4.16	16.7	29.74	Ind > 1000
M-T4-1	11: T4 SEC	500	475	IND	1800		2.4	16.7	12.0	>50

Copyright © 2001 IEEE. All rights reserved.

Copyright The Institute of Electrical and Electronics Engineers, Inc.
Provided by IHS under license with IEEE
No reproduction or networking permitted without license from IHS
Not for Resale

Table 2-3c—Sample system input: motor data (*Continued*)

Ident	Bus	hp	kVA	Type	R/min	pF	kV	%X	X/R	EZ-Code
M-T5-1	17: T5 SEC	850	824.2	IND	1800		0.48	16.7	10.0	<50
M-T5-2	17: T5 SEC	500	500	IND	1800		0.48	16.7	5.0	>50
M-T5-3	22: T5MCC	150	142.5	IND	1800		0.48	16.7	14.0	<50
M-T6-1	18: T6 SEC	850	824.2	IND	1800		0.48	16.7	10.0	<50
M-T6-2	18: T6 SEC	500	500	IND	1800		0.48	16.7	5.0	>50
M-T6-3	23: T6MCC	150	142.5	IND	1800		0.48	16.7	14.0	<50
M-T7-1	19: T7 SEC	1250	1125	IND	1800		2.4	16.7	26.10	Ind > 1000
M-T7-2	19: T7 SEC	2500	2375	IND	1800		2.4	16.7	15.0	Ind > 1000
M-T8-1	20: T8 SEC	1750	1662.5	IND	1800		2.4	16.7	15.0	Ind > 1000
M-T8-2	20: T8 SEC	2000	1800	IND	1800		2.4	28.0	26.0	Ind > 1000
M-T9-1	21: T9 SEC	750	727.3	IND	1800		0.48	16.7	12.0	<50

Table 2-3d—Sample system input: transformer data

Ident	kVA	$\%Z_1$	X/R	$\%Z_0$	X/R	From kV	To kV	Tap	From bus	To bus
T-1	15000	8.00	17.0	7.20	17.0	69	13.8	69.000	01: 69-1	03: MILL-1
T-10	1500	5.75	6.5	5.75	6.5	13.8	0.48	13.800	25: T10 PRI	28: T10 SEC
T-11	1500	5.75	6.5	5. 50	6.5	13.8	0.48	13.800	26: FDR G	29: T11 SEC
T-12	1500	5.75	6.5	5.50	6.5	13.8	0.48	13.800	27: T12 PRI	30: T12 SEC
T-13	2500	5.75	10.0	50.0	10.0	13.8	2.4	13.800	31: FDR P	36: T13 SEC
T-14	1000	5.75	5.50	50.0	10.0	13.8	0.48	13.800	32: FDR Q	37: T14 SEC
T-17	1250	4.50	6.0	4.50	6.0	13.8	0.48	13.800	05: FDR F	49: RECT
T-18	1500	5.75	5.91	5.75	5.91	13.8	0.48	13.800	50: GEN 1	51: AUX
T-2	15000	8.00	17.0	7.40	17.0	69	13.8	69.000	02: 69-2	04: MILL-2
T-3	1725	6.00	8.0	6.00	8.0	13.8	4.16	13.800	05: FDR F	39: T3 SEC
T-4	1500	5.75	6.5	5.50	6.5	13.8	0.48	13.800	06: FDR H	11: T4 SEC
T-5	1500	6.75	6.5	6.75	6.5	13.8	0.48	13.800	12: T5 PRI	17: T5 SEC
T-6	1500	5.75	6.5	5.75	6.5	13.8	0.48	13.800	13: T6 PRI	18: T6 SEC

Copyright © 2001 IEEE. All rights reserved.

Copyright The Institute of Electrical and Electronics Engineers, Inc.
Provided by IHS under license with IEEE
No reproduction or networking permitted without license from IHS
Not for Resale

Table 2-3d—Sample system input: transformer data (*Continued*)

Ident	kVA	%Z_1	X/R	%Z_0	X/R	From kV	To kV	Tap	From bus	To bus
T-7	3730	5.50	12.0	5.50	12.0	13.8	2.4	13.800	06: FDR H	19: T7 SEC
T-8	3730	5.50	12.0	5.50	12.0	13.8	2.4	13.800	15: FDR I	20: T8 SEC
T-9	750	5.75	5.0	5.50	5.0	13.8	0.48	13.800	16: T9 PRI	21: T9 SEC

Table 2-3e—Sample system input: cable data

Ident	Config	Cable/ϕ	Size	Mtl	Conduit	Length (m)	kV	From bus	To bus
C-E1	3/c	1	250 Kcmil	Cu	PVC	198.12	13.8	03: MILL-1	09: FDR-E
C-E2	3/c	1	250 Kcmil	Cu	PVC	558.6984	13.8	09: FDR-E	25: T10 PRI
C-E3	3/c	1	250 Kcmil	Cu	PVC	22.86	13.8	09: FDR-E	13: T6 PRI
C-E4	3/c	1	250 Kcmil	Cu	PVC	50.292	13.8	09: FDR-E	12: T5 PRI
C-F1	3/c	1	250 Kcmil	Cu	PVC	99.06	13.8	03: MILL 1	05: FDR-F
C-G1	3/c	1	250 Kcmil	Cu	PVC	207.264	13.8	03: MILL 1	26: FDR-G
C-H1	3/c	1	250 Kcmil	Cu	PVC	143.5608	13.8	03: MILL 1	06: FDR-H
C-I1	3/c	1	250 Kcmil	Cu	PVC	298.704	13.8	04: MILL 2	15: FDR-I
C-J2	3/c	1	250 Kcmil	Cu	PVC	188.6712	13.8	04: MILL 2	27: FDR-J
C-J3	3/c	1	250 Kcmil	Cu	PVC	361.7976	13.8	16: T9 PRI	04: MILL-2
C-J4	3/c	1	250 Kcmil	Cu	PVC	60.96	13.8	10: EMERG	13: T6 PRI
C-J5	3/c	1	250 Kcmil	Cu	PVC	3.048	13.8	10: EMERG	12: T5 PRI
C-J6	3/c	1	250 Kcmil	Cu	Steel	144.78	13.8	10: EMERG	27: T12 PRI
C-L1	3/c	1	250 Kcmil	Cu	PVC	155.448	13.8	04: MILL 2	08: FDR-L
C-M1	3/c	1	400 Kcmil	Cu	PVC	155.448	13.8	04: MILL 2	24: FDR-M
C-M2	3/c	1	250 Kcmil	Cu	PVC	103.632	13.8	24: FDR-M	31: FDR-P
C-M3	3/c	1	250 Kcmil	Cu	PVC	147.828	13.8	24: FDR-M	32: FDR-Q
C-T10-1	3/c	1	250 Kcmil	Cu	PVC	15.24	13.8	28: T10 SEC	38: 480 TIE
C-T10-2	3/c	2	400 Kcmil	Cu	PVC	6.096	0.48	33: T10 MCC	28: T10 SEC
C-T11-1	3/c	1	250 Kcmil	Cu	PVC	20.1168	0.48	29: T11 SEC	38: 480 TIE
C-T11-2	3/c	2	400 Kcmil	Cu	PVC	6.096	0.48	34: T11 MCC	29: T11 SEC

Copyright © 2001 IEEE. All rights reserved.

--`,,`-`-`,,`,,`,`,,`---

Copyright The Institute of Electrical and Electronics Engineers, Inc.
Provided by IHS under license with IEEE
No reproduction or networking permitted without license from IHS
Not for Resale

Table 2-3e—Sample system input: cable data (*Continued*)

Ident	Config	Cable/ϕ	Size	Mtl	Conduit	Length (m)	kV	From bus	To bus
C-T12-1	3/c	1	250 Kcmil	Cu	PVC	15.24	0.48	38: 480 TIE	30: T12 SEC
C-T12-2	3/c	1	400 Kcmil	Cu	PVC	6.096	0.48	35:T12 MCC	30: T12 SEC
C-T5-1	3/c	1	250 Kcmil	Cu	PVC	6.096	0.48	22: T5 MCC	17: T5 SEC
C-T6-1	3/c	1	250 Kcmil	Cu	PVC	6.096	0.48	23: T6 MCC	18: T6 SEC
C1A	1/c	2	500 Kcmil	Cu	PVC	609.60	13.8	50: GEN1	03: MILL-1

Table 2-3f—Sample system input: current-limiting reactor data

Ident	Thru kVA	Amps	Ohms	Mtl	kV	%Z	X/R	From bus	To bus
CLR-3	23903	1000	0.800	Cu	13.800	3.35	100	04: MILL-2	

Table 2-3g—Sample system input: busway data

Ident	Manuf	Length (m)	Amps	kV	R/100	X/100	Mtl	From bus	To bus
BWY-1	SQD-I-Li	15.24	1000	0.48	0.0016	0.0010	Cu	28: T10 SEC	41: LGTS

Table 2-3h—Sample system input: transmission line data

Ident	Cond/ phase	Size (Kcmil L)	Mtl	GMD (m)	Length (km)	kV	From bus	To bus
L-1	1	266.8	ACSR	2.1336	3.0474	69.000	100: UTIL-69	01: 69-1
L-2	1	266.8	ACSR	2.1336	3.0474	69.000	100: UTIL-69	02: 69-2

2.9.2 Computer analysis of the example system

A computer analysis of the sample system and areas of interest are presented and discussed from a protection viewpoint. Equipment duty verification and the application of ANSI or IEC multipliers are not considered.

In a computer analysis of a power system, the mathematical model of the system is developed from a bus or node structure describing the system. This relationship allows for easy

Copyright © 2001 IEEE. All rights reserved.

Copyright The Institute of Electrical and Electronics Engineers, Inc.
Provided by IHS under license with IEEE
No reproduction or networking permitted without license from IHS
Not for Resale

calculation of the fault current at any bus in the system. Unfortunately, bus currents are not the currents seen by protective devices; instead, these devices measure the current that flows in the circuit into which they are connected. The appropriate current for evaluating these devices is called, in the terminology of computer analysis, a branch current.

Protection engineers should be careful to evaluate protective devices using correct branch currents and not bus currents, which generally are much larger in magnitude. This distinction is extremely important and cannot be overemphasized.

Similarly, protection engineers are often concerned about the performance of ground relays or other protective devices that are designed to detect single phase-to-ground-fault conditions. In interpreting the output from a computer program, the analyst should keep in mind that what the program calculates and what the analyst's protective relay measures may be two different things. Many ground relays are wired to receive the residual current from a set of three-phase current transformers (CTs) and, as such, measure a physical current that can be described in the language of symmetrical components as three times the zero-sequence branch current. Often, computer programs produce the zero-sequence current distribution without the three multiplier.

Example A: Calculate the maximum three-phase current measured by an instantaneous relay, fuse, or series trip device on the 13.8 kV feeder serving the 2 Mvar power factor capacitor on Bus 4.

Figure 2-14 depicts a portion of the system one-line diagram and shows a fault in the 13.8 kV, 2 Mvar capacitor feeder on Bus 4. The calculated current magnitudes are

— 19 203 A, rms asymmetrical
— 12 410 A, rms symmetrical

A moderate asymmetrical offset (X/R = 15.65) is present due primarily to the close proximity of the generator, which contributes 4080 A of symmetrical current. The largest contributor, of course, is the utility, with other sources making up the difference. Because this figure is only a portion of the sample one-line diagram (in Figure 2-13), the details of all the source flows do not appear in the graphical representation. The capacitor itself does not contribute current to the fault. Present practice ignores any capacitor contribution to system short-circuit currents on the basis that it occurs so quickly and is out of phase with system currents. In this instance, also, a protective device in the capacitor feeder would detect currents flowing from the system to a fault on the feeder, or current flowing from the capacitor to the system, but not both, again illustrating that the analyst should carefully consider what constitutes the branch current measured by the protective device of interest.

Figure 2-15 shows this same fault condition, but with the impedances adjusted to calculate the long-time fault magnitude. The current has decayed to less than 9185 A symmetrical and the generator contribution is down to 2721 A. Also, the contributions from motors on the system have dropped to zero.

 Copyright © 2001 IEEE. All rights reserved.

Copyright The Institute of Electrical and Electronics Engineers, Inc.
Provided by IHS under license with IEEE
No reproduction or networking permitted without license from IHS Not for Resale

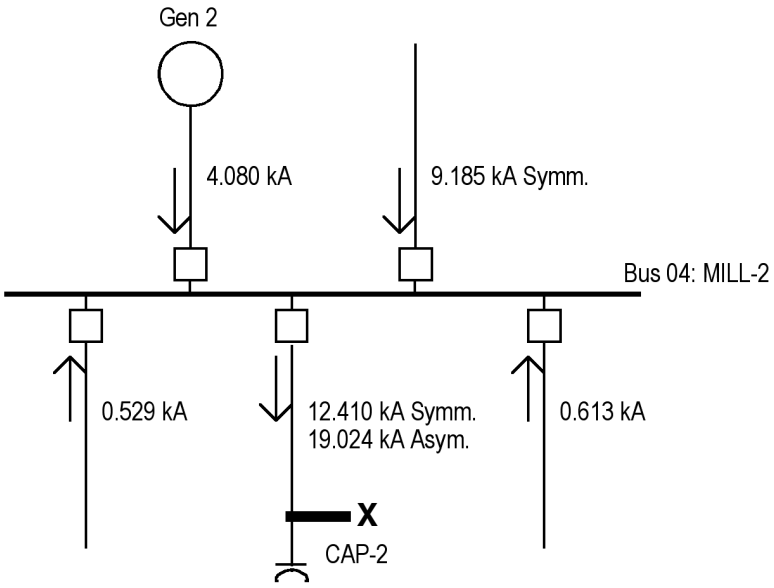

NOTE—A significant dc offset exists. (Asymmetrical current is 19.02 kA. The symmetrical current is 12.41 kA.)

Figure 2-14—Distribution of instantaneous currents for fault on capacitor feeder in sample system

Example B: Calculate the phase-to-ground fault on the primary of 69 kV Transformer T-1.

Figure 2-16 shows the phase-to-ground-fault current ($3I_0$) at the receiving end of tie line #1 (at Bus 1). The long-time fault current of 5468 A flows exclusively from the utility source because both transformers in the plant have delta-connected primary windings.

Example C: Calculate the phase-to-ground fault at the secondary of Transformer T-5.

For illustration, this problem is calculated the old fashioned way, by hand. Figure 2-17 depicts the sequence network interconnections for this problem.

Based on the observation that an open circuit exists in the zero-sequence equivalent circuit, no current flows for this fault condition; therefore, nothing is to be calculated.

2.10 Specialized faults for protection studies

For detailed protection studies, a simple bus fault, even with a full branch display, is not sufficient to meet the needs of the protection engineer. As noted in Example A, the analyst should know how much of the branch current the analyst's protective device actually measures. Because the mathematical model of a power system is developed in terms of buses, or nodes,

Copyright © 2001 IEEE. All rights reserved.

Copyright The Institute of Electrical and Electronics Engineers, Inc.
Provided by IHS under license with IEEE
No reproduction or networking permitted without license from IHS
Not for Resale

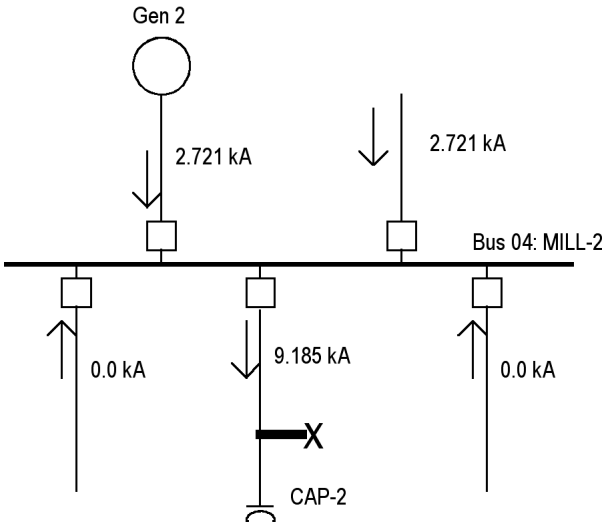

NOTE—The current is purely symmetrical and the contributions from sources other than the generator and utility have decayed away.

Figure 2-15—Calculated distribution of long-time relay current to fault on capacitor feeder in sample system

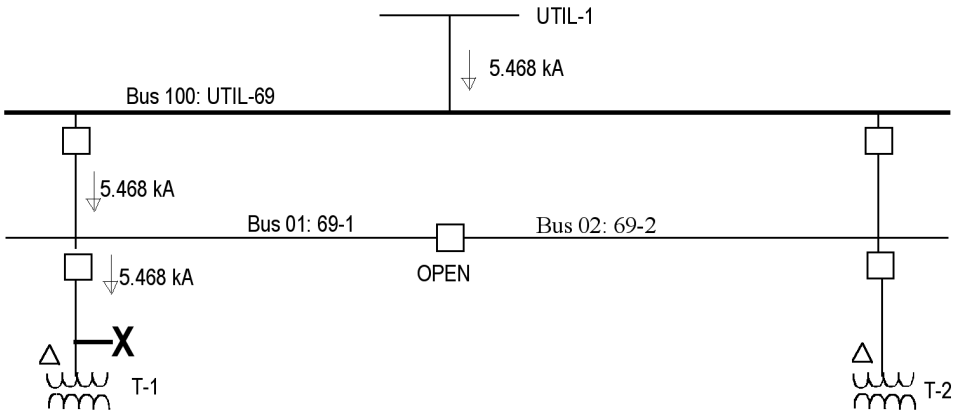

NOTE—This sketch shows the current that would be seen by a typical ground fault relay that measures $3 \infty I_0$.

Figure 2-16—Phase-to-ground fault on high-voltage bushings of Transformer T-1

evaluating faults at points other than buses can be difficult. For these reasons, protection engineers have developed additional computer methods that more realistically simulate exact real-world conditions.

Copyright © 2001 IEEE. All rights reserved.

Copyright The Institute of Electrical and Electronics Engineers, Inc.
Provided by IHS under license with IEEE
No reproduction or networking permitted without license from IHS
Not for Resale

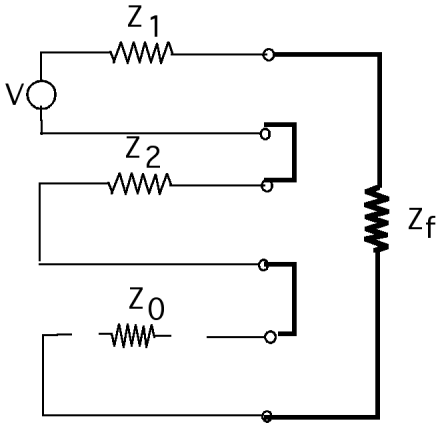

NOTE—Because this transformer is connected delta-delta, the zero-sequence network is open circuited.

Figure 2-17—Sequence interconnections for single-line-to-ground fault at secondary of Transformer T-5

The line-end fault is defined as the fault at the end of a line with that line end open. Normally applied to long transmission circuits where the line impedance may cause an appreciable difference between the near-end and far-end currents, line-end faults may also be used to examine faults inside transformers or reactors, to study minimum fault conditions with downed lines or other high-impedance returns, and, in more complex situations, to study mutual coupling between adjacent lines.

View (a) in Figure 2-18 shows a line fault at the end of a pair of parallel circuits. The magnitude of this fault can be determined by calculating a bus fault at the far-end bus and carefully determining the branch current flows. View (b) in Figure 2-18 shows a line-end fault at the same location. Obviously, both fault conditions are possible. In fact, a fault might begin as in View (a) and progress to the distribution of currents shown in View (b) when the circuit breaker at the far end of the faulted circuit trips.

The line-out fault illustrated in View (c) in Figure 2-18 is similar to the line-end fault except that the fault of interest is not at the end of the open line. Instead, faults are calculated at one or more locations for the special case of a circuit of interest being removed for such calculation. Running a sequence of line-out cases is the same as repeating the system calculation with various lines removed from service; the difference is that computer programs that are designed to calculate line-out faults do so automatically based on line-switching logic established prior to starting the computer. Line-out calculations are especially important when studying the performance of protective devices in network applications.

In evaluating the application of interrupting devices, taking a line out of service in either a line-end or line-out calculation normally reduces the magnitude of calculated bus fault cur-

Copyright © 2001 IEEE. All rights reserved.

Copyright The Institute of Electrical and Electronics Engineers, Inc.
Provided by IHS under license with IEEE
No reproduction or networking permitted without license from IHS
Not for Resale

rent. However, branch currents can actually increase when line-end or line-out contingencies are evaluated. This is especially true in determining branch residual ($3I_0$) relay currents.

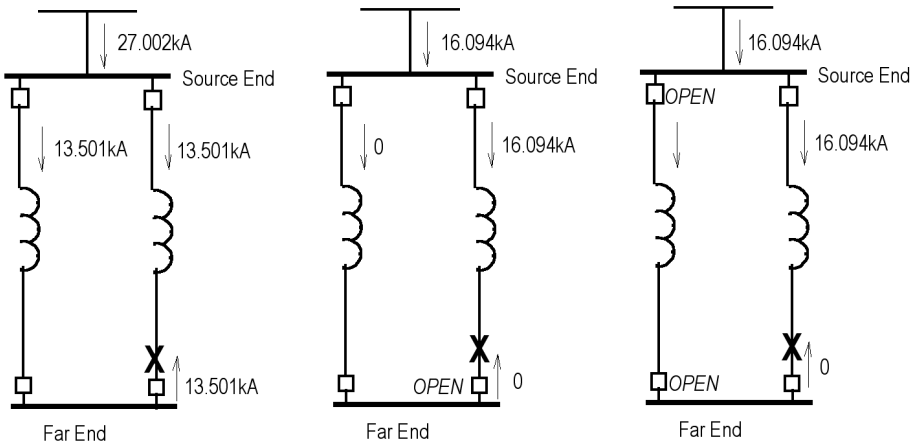

NOTE—These distinctions become important if sources of fault current exist at both the source end and the far end of the parallel circuits.

Figure 2-18—Distinctions between normal bus faults, line-end faults, and line-out fault conditions

2.11 References

This recommended practice shall be used in conjunction with the following standards. When the following standards are superseded by an approved revision, the revision shall apply.

IEEE Std 141-1993 (Reaff 1999), IEEE Recommended Practice for Electric Power Distribution for Industrial Plants (*IEEE Red Book*).[3]

IEEE Std 399-1997, IEEE Recommended Practice for Industrial and Commercial Power Systems Analysis (*IEEE Brown Book*).

IEEE Std C37.010-1999, IEEE Application Guide for AC High-Voltage Circuit Breakers Rated on a Symmetrical Current Basis.

IEEE Std C37.5-1979, IEEE Guide for Calculation of Fault Currents for Application of AC High-Voltage Circuit Breakers Rated on a Total Current Basis.

[3]IEEE publications are available from the Institute of Electrical and Electronics Engineers, 445 Hoes Lane, P.O. Box 1331, Piscataway, NJ 08855-1331, USA (http://standards.ieee.org/).

Copyright © 2001 IEEE. All rights reserved.

Copyright The Institute of Electrical and Electronics Engineers, Inc.
Provided by IHS under license with IEEE
No reproduction or networking permitted without license from IHS
Not for Resale

2.12 Bibliography

The following publications may provide information of interest to readers wishing to pursue the subject of this chapter in further detail. Many of the more classic books on this list are no longer in print, but may be found in well-stocked technical libraries.

[B1] Beeman, D. L., ed., *Industrial Power System Handbook*. New York: McGraw-Hill, 1955, Chapter 2.

[B2] Blackburn, J. L., *Symmetrical Components*. New York: Marcel Dekker, 1994.

[B3] Clarke, E, *Circuit Analysis of AC Power Systems*, Vol. 1, "Symmetrical and Related Components." New York: Wiley, 1943.

[B4] *Electrical Transmission and Distribution Reference Book*. East Pittsburgh, PA: Westinghouse Electric Corporation, 1964.

[B5] Fortescue, C. L., "Method of Symmetrical Coordinates Applied to the Solution of Polyphase Networks," *AIEE Transactions*, vol. XXXVII, part II, pp. 1027–1140, July-Dec. 1981.

[B6] Kerchner, R. M., and Corcoran, G. F., *Alternative-Current Components*, 4th ed. New York: Wiley, 1960, Chapter 12.

[B7] Ohlson, R. O., "Procedure for Determining Maximum Short-Circuit Values in Electrical Distribution Systems at Medium-Voltage Levels," *IEEE Transactions on Industry and General Applications*, vol. IGA-3, pp. 97-120, Mar./Apr. 1967.

[B8] Prabhakara, F. S., Smith, R. L., Jr., and Stratford, R. P., *Industrial and Commercial Power Systems Handbook*. New York: McGraw Hill, 1995.

[B9] Reed, M. B., *Alternating Current Circuit Theory*, 2nd ed. New York: Harper and Row, 1956.

[B10] Stevenson, W. D., Jr., *Elements of Power System Analysis*. New York: McGraw Hill, 1982.

[B11] Wagner, C. F., and Evans, R. D., *Symmetrical Components*. New York: McGraw-Hill, 1933.

Copyright © 2001 IEEE. All rights reserved.

Copyright The Institute of Electrical and Electronics Engineers, Inc.
Provided by IHS under license with IEEE
No reproduction or networking permitted without license from IHS
Not for Resale

--`,,`-`-`,,`,,`,`,,`---

Copyright The Institute of Electrical and Electronics Engineers, Inc.
Provided by IHS under license with IEEE
No reproduction or networking permitted without license from IHS

Not for Resale

Chapter 3
Instrument transformers

3.1 Introduction

This chapter discusses instrument transformers as they relate to protection. Design of these devices is discussed only to the extent that it relates to the application and use of instrument transformers in protection applications.

3.2 Current transformers (CTs)

A CT transforms line current into values suitable for standard protective relays and isolates the relays from line voltages. A CT has two windings, designated as primary and secondary, which are insulated from each other. The various types of primary windings are covered in 3.2.1. The secondary is wound on an iron core. The primary winding is connected in series with the circuit carrying the line current to be measured; and the secondary winding is connected to protective devices, instruments, meters, or control devices. The secondary winding supplies a current in direct proportion and at a fixed relationship to the primary current.

3.2.1 Types of CTs

The four common types of CTs are as follows:

a) A wound CT has a primary winding consisting of one or more turns mechanically encircling the core or cores. The primary and secondary windings are insulated from each other and from the core(s) and are assembled as an integral structure (see Figure 3-1).

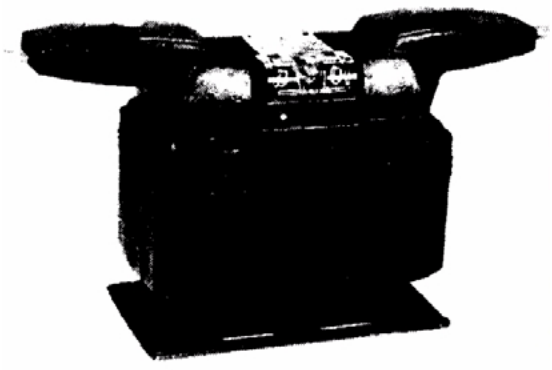

Figure 3-1—Wound CT

Copyright © 2001 IEEE. All rights reserved.

Copyright The Institute of Electrical and Electronics Engineers, Inc.
Provided by IHS under license with IEEE
No reproduction or networking permitted without license from IHS
Not for Resale

b) A bar CT has a fixed, insulated, straight conductor in the form of a bar, rod, or tube that is a single primary turn passing through the magnetic circuit and is assembled to the secondary, core and winding (see Figure 3-2).

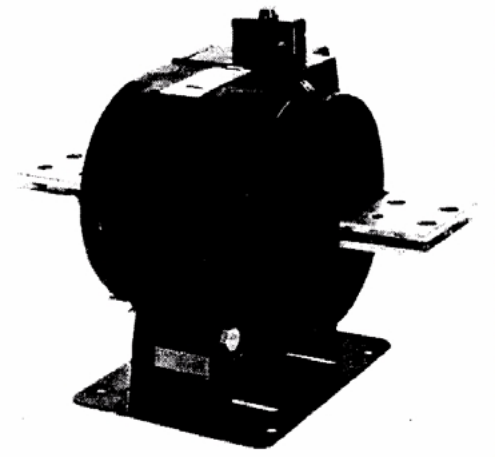

Figure 3-2—Bar CT

c) A window CT has a secondary winding insulated from and permanently assembled on the core, but has no primary winding as an integral part of the structure. Primary insulation is provided in the window through which one or more turns of the line conductor can be passed to provide the primary winding (see Figure 3-3).



Figure 3-3—Window CT

d) A bushing CT has an annular core and a secondary winding insulated from and permanently assembled on the core, but has no primary winding or insulation for a

Copyright © 2001 IEEE. All rights reserved.

Copyright The Institute of Electrical and Electronics Engineers, Inc.
Provided by IHS under license with IEEE
No reproduction or networking permitted without license from IHS
Not for Resale

primary winding. This type of CT is used with a fully insulated conductor as the primary winding and used typically in equipment where the primary conductor is a component part of other apparatus, for example, on bushings of a transformer or circuit breaker.

The secondary windings of bushing CTs are usually fully distributed around the core. Typically they are multiratio with each winding tap also being fully distributed.

3.2.2 Ratios

IEEE Std C57.13-1993[1] designates certain ratios as standard. These ratios are shown in Table 3-1 and Table 3-2. The standard rated secondary current in all instances is 5 A.

Table 3-1—CT ratings, multiratio bushing

Current ratings (A)	Secondary taps		Current ratings (A)	Secondary taps	
600:5	50:5	X2-X3	3000:5	300:5	X3-X4
	100:5	X1-X2		500:5	X4-X5
	150:5	X1-X3		800:5	X3-X5
	200:5	X4-X5		1000:5	X1-X2
	250:5	X3-X4		1200:5	X2-X3
	300:5	X2-X4		1500:5	X2-X4
	400:5	X1-X4		2000:5	X2-X5
	450:5	X3-X5		2200:5	X1-X3
	500:5	X2-X5		2500:5	X1-X4
	600:5	X1-X5		3000:5	X1-X5
1200:5	100:5	X2-X3	4000:5	500:5	X1-X2
	200:5	X1-X2		1000:5	X3-X4
	300:5	X1-X3		1500:5	X2-X3
	400:5	X4-X5		2000:5	X1-X3
	500:5	X3-X4		2500:5	X2-X4
	600:5	X2-X4		3000:5	X1-X4
	800:5	X1-X4		3500:5	X2-X5
	900:5	X3-X5		4000:5	X1-X5
	1000:5	X2-X5			
	1200:5	X1-X5			
2000:5	300:5	X3-X4	5000:5	500:5	X2-X3
	400:5	X1-X2		1000:5	X4-X5
	500:5	X4-X5		1500:5	X1-X2
	800:5	X2-X3		2000:5	X3-X4
	1100:5	X2-X4		2500:5	X2-X4
	1200:5	X1-X3		3000:5	X3-X5
	1500:5	X1-X4		3500:5	X2-X5
	1600:5	X2-X5		4000:5	X1-X4
	2000:5	X1-X5		5000:5	X1-X5

[1]Information on references can be found in 3.4.

Copyright © 2001 IEEE. All rights reserved.

Copyright The Institute of Electrical and Electronics Engineers, Inc.
Provided by IHS under license with IEEE
No reproduction or networking permitted without license from IHS
Not for Resale

Table 3-2—Ratings for CTs with one or two ratios

Single ratio (A)	Double ratio with series—parallel primary windings (A)	Double ratio with taps in secondary winding (A)
10:5	25 × 50:5	25/50:5
15:5	50 × 100:5	50/100:5
25:5	100 × 200:5	100/200:5
40:5	200 × 400:5	200/400:5
50:5	400 × 800:5	300/600:5
75:5	600 × 1200:5	400/800:5
100:5	1000 × 2000:5	600/1200:5
200:5	2000 × 4000:5	1000/2000:5
300:5		1500/3000:5
400:5		2000/4000:5
600:5		
800:5		
1200:5		
1500:5		
2000:5		
3000:5		
4000:5		
5000:5		
6000:5		
8000:5		
12 000:5		

3.2.3 Application

The general considerations for the application of CTs are as follows:

a) *Continuous-current rating*. The maximum continuous-current rating should be equal to or greater than the rating of the circuit in which the CT is used. The magnitude of inrush current should also be considered, particularly with respect to its effect upon meters, relays, and other connected devices. For example, a 600:5 CT would be recommended for use on a circuit with a full-load current of 400 A.

b) *Continuous-thermal-current rating factor*. The continuous-thermal-current rating factor is supplied by the CT manufacturer. It identifies the amount of current that can be carried continuously without exceeding the limiting temperature rise from 30 °C ambient air temperature. The continuous current is multiplied by the rating factor to determine the maximum current. (When a CT is incorporated internally as part of a larger transformer or power circuit breaker, it shall meet allowable average winding and hot-spot temperature limits under specific conditions of the larger apparatus.) The rating factors are 1.0, 1.33, 1.5, 2.0, 3.0, or 4.0: for example, a 100:5 CT with a rating factor equal to 1.5 may be operated up to current levels of 150:7.5 (150 A primary current: 7.5 A secondary current).

Copyright © 2001 IEEE. All rights reserved.

Copyright The Institute of Electrical and Electronics Engineers, Inc.
Provided by IHS under license with IEEE
No reproduction or networking permitted without license from IHS Not for Resale

The secondary devices should be checked for continuous load capability before a CT is operated above 5 A secondary current. Damage can occur in meters and relays if operated above their limits.

c) *Short-time thermal rating*. The short-time thermal rating is the symmetrical root-mean-square (rms) primary current that the CT can carry for 1 s with the secondary winding short-circuited, without exceeding the limiting temperature in any winding.

d) *Short-time mechanical rating*. The short-time mechanical rating is the maximum current the CT is capable of withstanding without damage with the secondary short-circuited. It is the rms value of the ac component of a completely displaced (asymmetrical) primary current wave.

e) *Nominal system voltage*. CTs are typically designed to operate continuously at 10% above rated nominal system voltage. Standard nominal system voltages for most industrial applications are 480 V, 600 V, 2400 V, 4160 V, 12 470 V, 13 800 V, and 14 400 V. It is common practice to apply window CTs rated 600 V to systems with higher voltages. This practice is done by passing fully insulated conductors through the window. The conductor insulation functions as the CT primary insulation providing a fully rated installation.

f) *Basic impulse insulation levels (BILs) versus nominal system voltage*. The values are given in Table 3-3.

Table 3-3—BILs for CTs

Nominal system voltage (kV)	Maximum line-to-ground voltage (kV)	BIL and full wave crest (kV)
0.6	0.38	10
2.4	1.53	45
5.0	3.06	60
8.7	5.29	75
15.0	8.9	110 or 95
25.0	16.0	150 or 125
34.5	22.0	200

3.2.4 Accuracy

Protective-relay performance depends on the accuracy of the CTs not only at load currents, but also at all fault current levels. Accuracy can be visualized as how closely the secondary wave shape resembles the primary wave shape. Wave shape and phase difference are both components of the accuracy classification. The CT accuracy at high overcurrents depends on the cross section of the iron core and the number of turns in the secondary winding. The greater the cross section of the iron core, the more flux can be developed before saturation. Saturation results in a rapid decrease in transformation accuracy. The greater the number of secondary turns, the less flux that is required to force the secondary current through the relay. This factor influences the burden the CT can carry without loss of accuracy.

Copyright © 2001 IEEE. All rights reserved.

--`,,`,,`,,,,,,,`,,`---

Copyright The Institute of Electrical and Electronics Engineers, Inc.
Provided by IHS under license with IEEE
No reproduction or networking permitted without license from IHS
Not for Resale

IEEE Std C57.13-1993 designates the relaying accuracy class by use of one letter, either C or T, and the classification number. C means that the percent ratio correction can be accurately calculated, and T means that it has been determined by test. The classification number indicates the secondary terminal voltage that the transformer delivers to a standard burden (as listed in Table 3-4) at 20 times normal secondary current without exceeding a 10% ratio correction. The ratio correction should not exceed 10% at any current from 1 to 20 times rated current at standard burden. The standard designated secondary terminal voltages are 10 V, 20 V, 50 V, 100 V, 200 V, 400 V, and 800 V. For instance, a transformer with a relaying accuracy class of C200 means that the percent ratio correction can be calculated and that it does not exceed 10% at any current from 1 to 20 times the rated secondary current at a standard burden of 2.0 Ω . (Maximum terminal voltage = 20×5 A $\times$ 2 Ω = 200 V.)

Table 3-4—Standard burdens for CTs with 5 A secondaries[a]

Burden[b] designation	Resistance (Ω)	Inductance (mH)	Impedance (Ω)	Volt-amperes (at 5 A)	Power factor
Metering burdens					
B-0.1	0.09	0.116	0.1	2.5	0.9
B-0.2	0.18	0.232	0.2	5.0	0.9
B-0.5	0.45	0.580	0.5	12.5	0.9
B-0.9	0.81	1.04	0.9	22.5	0.9
B-1.8	1.62	2.08	1.8	45	0.9
Relaying burdens					
B-1	0.5	2.3	1.0	25	0.5
B-2	1.0	4.6	2.0	50	0.5
B-4	2.0	9.2	4.0	100	0.5
B-8	4.0	18.4	8.0	200	0.5

[a]If a CT is rated at other than 5 A, ohmic burdens for specification and rating may be derived by multiplying the resistance and inductance in the table by $[5/(\text{ampere rating})]^2$, the voltamperes at rated current and the power factor remaining the same.
[b]These standard burden designations have no significance at frequencies other than 60 Hz.

Some industrial power systems may have relatively small individual loads that are connected to a bus with inherently high short-circuit currents. The CT ratio tends to be low because the maximum current for each load tends to be small. The low-ratio CTs typically chosen result in a low accuracy class (i.e., less than C100). A low ratio CT may provide satisfactory performance at moderate overloads, but is inadequate at the high short-circuit levels. The working group paper chaired by Linders [B3][2] and the article by Dudor and Padden [B3] discuss this problem and present some solutions.

[2]The numbers in brackets correspond to the numbers of the bibliography in 3.5.

Copyright © 2001 IEEE. All rights reserved.

Copyright The Institute of Electrical and Electronics Engineers, Inc.
Provided by IHS under license with IEEE
No reproduction or networking permitted without license from IHS Not for Resale

3.2.5 Burden

Burden, in CT terminology, is the load connected to the secondary terminals and is expressed as

— Voltamperes and power factor at a specified value of current,
— Total ohms impedance and power factor, or
— Ohms of the resistance and reactive components.

The term *burden* is used to differentiate the CT load from the primary circuit load. The power factor referred to is that of the burden and not of the primary circuit. To compare various transformers, ANSI has designated standard burdens to be used in the evaluation process (see Table 3-4).

3.2.6 Secondary excitation characteristics and overcurrent ratio curves

Secondary excitation characteristics, as published by the manufacturers, are in the form of excitation current versus secondary rms voltage (see Figure 3-4). The values are obtained either by calculation from the transformer design data and core-loss curves or by average test values from a sample of CTs. The test is an open-circuit excitation current test on the secondary terminals, using a variable rated frequency sine wave voltage and recording rms current versus rms voltage.

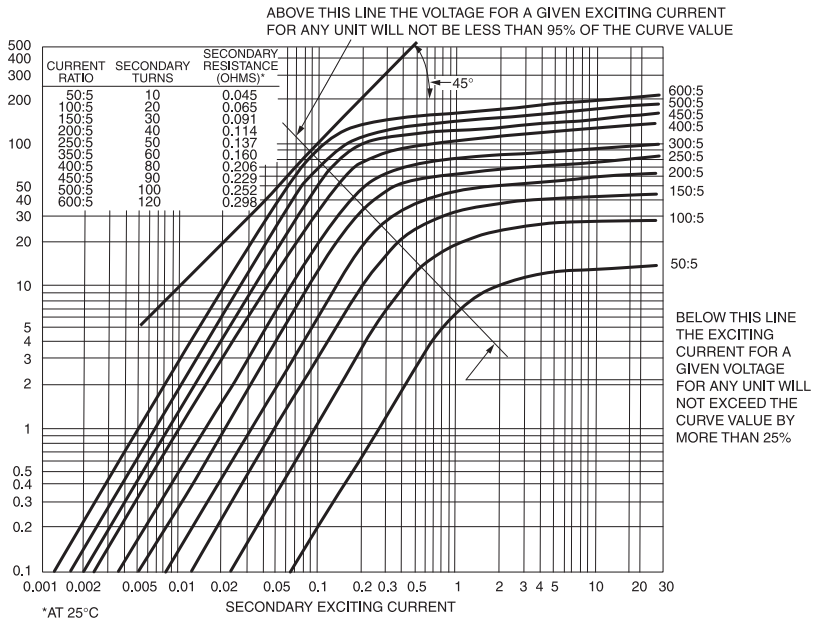

Figure 3-4—Secondary excitation curves for various turn ratios of a specific CT

Copyright © 2001 IEEE. All rights reserved.

Copyright The Institute of Electrical and Electronics Engineers, Inc.
Provided by IHS under license with IEEE
No reproduction or networking permitted without license from IHS
Not for Resale

For Class T transformers, typical overcurrent ratio curves are plotted between primary and secondary current over the range from 1 to 22 times normal primary current for all the standard burdens (except B-0.9 and B-1.8) up to the standard burden that causes a ratio correction of 50% (see Figure 3-5).

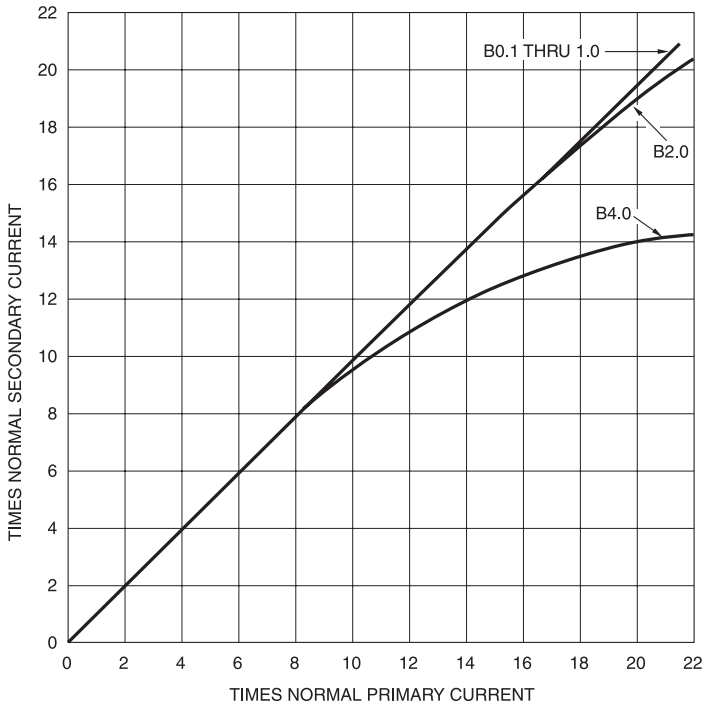

Figure 3-5—Typical overcurrent ratio curves for Class T transformers for burdens of 0.1 Ω through 8.0 Ω (except for B-0.9 and B-1.8)

3.2.7 Polarity

Polarity marks designate the relative instantaneous directions of currents. At the same instant that the primary current is entering the marked primary terminal, the corresponding secondary current is leaving the similarly marked secondary terminal, having undergone a magnitude change within the transformer (see Figure 3-6). The primary H_1 and secondary X_1 terminals are marked with white dots, or with a ± symbol, or with H_1 and X_1. As illustrated in Figure 3-6, the marked secondary conductor can be considered a continuation of the marked primary line as far as instantaneous current flow is concerned.

Copyright © 2001 IEEE. All rights reserved.

Copyright The Institute of Electrical and Electronics Engineers, Inc.
Provided by IHS under license with IEEE
No reproduction or networking permitted without license from IHS
Not for Resale

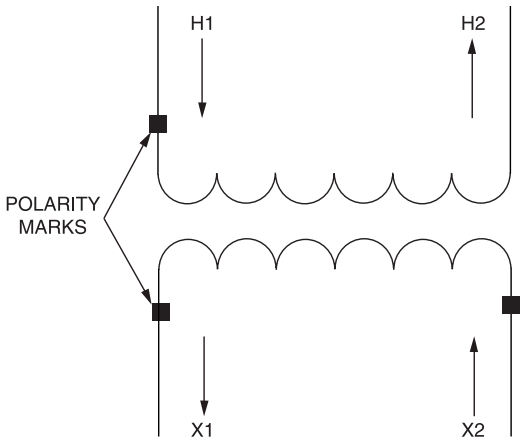

Figure 3-6—CT polarity diagram

3.2.8 Connections

CTs are usually connected on three-phase circuits in one of three ways, as follows:

a) *Wye connection*. In the wye connection, a CT is placed in each phase with time-overcurrent relays (Device 51) placed in either two or three CT secondaries to detect phase faults. On grounded four-wire systems, a time-overcurrent relay (Device 51N) in the CT common wire known as a residually connected relay detects any ground fault or neutral load currents. If neutral load currents are not to be detected by the Device 51N relay as ground-fault currents, a fourth CT is placed in the neutral conductor to cancel the neutral load currents. Secondary currents are in phase with primary currents (see Figure 3-7).

b) *Vee connection*. A vee connection is basically a wye with one leg omitted, using only two CTs. Applied as shown in Figure 3-8, this connection detects three-phase and phase-to-phase faults. A zero-sequence CT (window or bushing) and a ground overcurrent relay (Device 50GS or Device 51GS) are required to detect ground-fault currents. All three-phase conductors and the neutral (if present) shall pass through the CT.

c) *Delta connection*. A delta connection uses three CTs with the secondaries connected in delta before the connections are made to the relays. The delta connection shown in Figure 3-9 is typically used for power transformer differential relay protection schemes where the power transformer has delta-wye-connected windings. The CTs on the delta side are connected in wye, and the CTs on the wye side are connected in delta. This connection is described in detail in Chapter 4. The delta connection is also used for overcurrent protection of grounding transformers where filtering out the third-harmonic currents is desirable. When connected in delta, the current in the relays is equal to $\sqrt{3}$ times the CT secondary current. This fact should be considered when selecting the primary ratings of CTs and the secondary device ratings of delta-connected CTs.

Copyright © 2001 IEEE. All rights reserved.

Copyright The Institute of Electrical and Electronics Engineers, Inc.
Provided by IHS under license with IEEE
No reproduction or networking permitted without license from IHS
Not for Resale

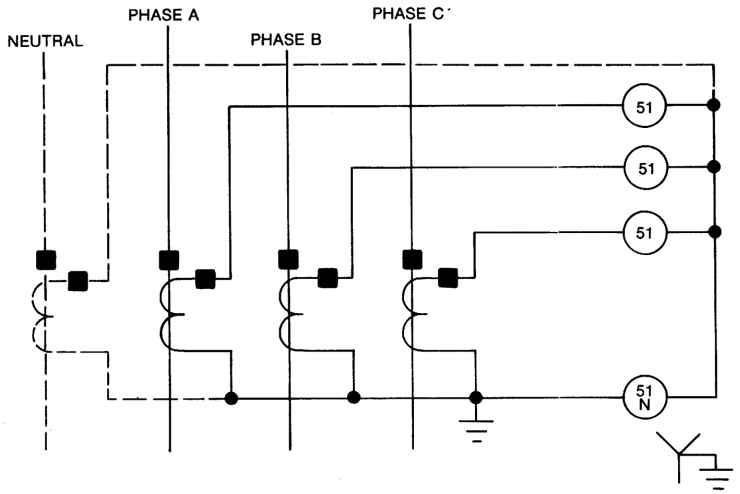

Figure 3-7—Wye-connected CTs

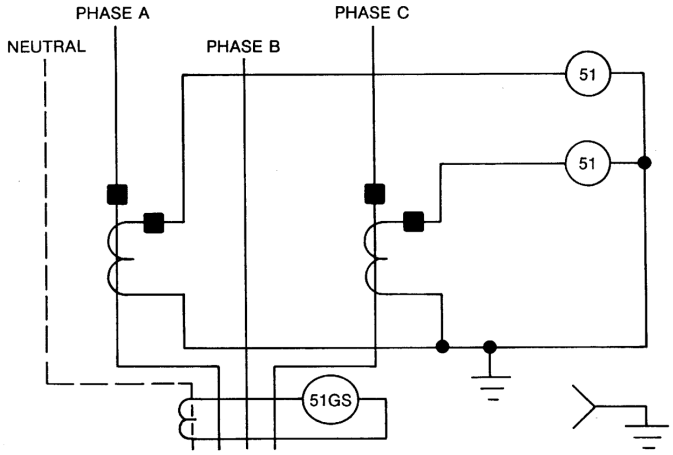

Figure 3-8—Vee- or open-delta-connected CTs

3.2.9 Examples of accuracy calculations

Example A and Example B illustrate the calculation technique for determining whether the CT provides satisfactory operation under short-circuit conditions with the burden of the connected devices. The devices used in the calculation are typical, and representative burden values are used. In specific situations, the number and burden of devices installed may vary, so the actual values of each device should be used. The examples assume no residually connected relay (Device 51N in Figure 3-7) present. Calculations to account for this relay are shown in Chapter 5 of *Protective Relaying* (see Blackburn [B2]).

 Copyright © 2001 IEEE. All rights reserved.

Copyright The Institute of Electrical and Electronics Engineers, Inc.
Provided by IHS under license with IEEE
No reproduction or networking permitted without license from IHS
Not for Resale

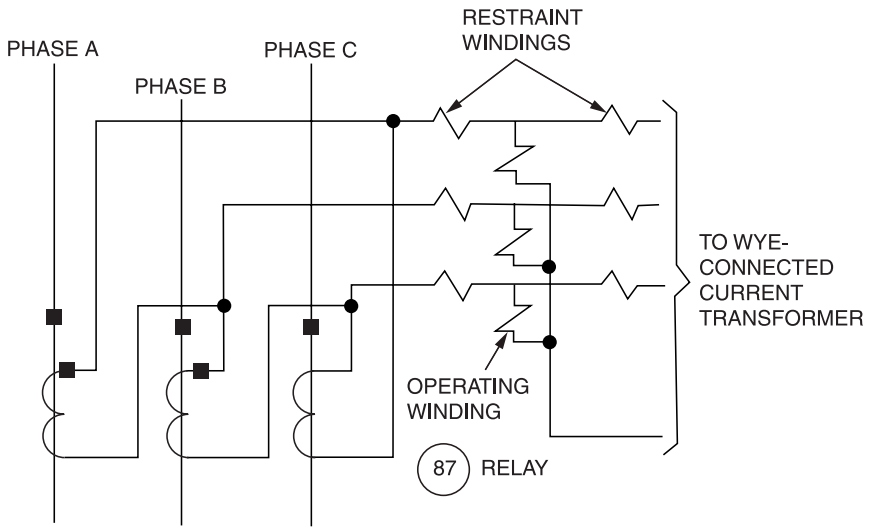

Figure 3-9—Delta-connected CTs

3.2.9.1 Example A: Calculation using a 600:5 multiratio bushing CT

Consider a 600:5 multiratio bushing CT with excitation characteristics as shown in Figure 3-4. It is connected for a 600:5 ratio (C200 accuracy class) and to a secondary circuit containing a phase overcurrent relay with an instantaneous element, a watthour meter, and an ammeter. The circuit contains approximately 50 ft of No. 12 wire, and the primary circuit has a capability of 24 000 A of fault current.

From instruction books for the devices and wire resistance tables, the following data are obtained:

- Phase relay, time unit, 1 A to 12 A, has a burden of 2.38 VA at 0.375 power factor at tap setting of 4 A (520 VA at 0.61 power factor at 100 A).
- Phase relay, instantaneous unit, 20 A to 80 A, has a burden of 4.5 VA at 20 A setting (150 VA at 0.20 power factor at 100 A).
- Watthour meter has a burden of 0.77 W at 0.54 power factor at 5 A.
- Ammeter has a burden of 1.04 VA at 0.95 power factor at 5 A.
- Wire resistance equals 1.72 Ω per 1000 ft at 25 °C and 1.0 power factor.
- CT secondary resistance equals 0.298 Ω at 25 °C and 1.0 power factor.

The steps for determining the performance of the CT for this application are as follows:

a) Determine the CT secondary burden.
b) Determine the voltage necessary to pass 100 A through the relay.
c) Determine whether the CT can develop this voltage and whether the excitation current from Figure 3-4 is less than 10% of the secondary current, as discussed in 3.2.4.

Copyright © 2001 IEEE. All rights reserved.

Copyright The Institute of Electrical and Electronics Engineers, Inc.
Provided by IHS under license with IEEE
No reproduction or networking permitted without license from IHS
Not for Resale

3.2.9.1.1 Step a)

As stated previously, the burden is expressed in voltamperes at a given power factor or as total ohms impedance given by its resistance and reactance components. Because most of the devices connected to CTs contain magnetic paths that become saturated, the burden should be calculated for the maximum current involved. In this example, operation is evaluated at 100 A secondary current (20 times rated) and at the actual fault current available.

Device 1, Relay, time unit	520 VA at 100 A at 52.4°	$Z = 520/(100)^2 = .052\ \Omega$ $= 0.052 < 52.4° = 0.0317 + j0.0412\ \Omega$
Device 2, Relay, instantaneous unit	150 VA at 100 A at 78.5°	$Z = 150/(100)^2 = 0.015\ \Omega$ $= 0.015 < 78.5° = 0.003 + j0.0147\ \Omega$
Device 3, Watthour meter	0.77 W at 5 A at 57.3°	VA = W/PF = 0.77/0.54 = 1.43 VA $Z = 1.43/(5)^2 = 0.057\ \Omega$ $= 0.057 < 57.3° = 0.031 + j0.048$ Because a watthour meter also has an iron-core magnetic circuit, the power factor at 20 times current is approximately 0.96. Thus, at 100 A, Z = resistance/power factor $= 0.031/0.96 = 0.0323\ \Omega$ $R + jX = 0.031 + j0.009$ $VA = (100)^2 \times 0.0323 = 323$ VA
Device 4, Ammeter	1.04 VA at 5 A at 18°	$Z = 1.04/(5)^2 = 0.042\ \Omega$ $= 0.042/18° = 0.040 + j0.013$ Because an ammeter applies basically an air-core magnetic circuit, no saturation is present at 20 times current. Thus, at 100 A, $VA = I^2Z = (100)^2 \times 0.042 = 420$ VA
Device 5, Wire	1.72 Ω per 1000 ft at 25 °C, 1.0 power factor	Thus, at 100 A, $VA = I^2R = (100)^2 \times (1.72 \times 50 \div 1000) = 860$ VA The one-way distance is used for a three-phase circuit, and the two-way distance is used for a single-phase circuit.
Device 6, CT secondary resistance	0.298 Ω at 1.00 power factor	Thus, at 100 A, $VA = I^2R = (100)^2 \times 0.298 = 2980$ VA

Copyright © 2001 IEEE. All rights reserved.

Copyright The Institute of Electrical and Electronics Engineers, Inc.
Provided by IHS under license with IEEE
No reproduction or networking permitted without license from IHS
Not for Resale

Totaling the burden for Device 1 through Device 6 at 100 A:

Device	Voltamperes	Impedance
1	520	0.0317 + j0.0412
2	150	0.003 + j0.0147
3	323	0.031 + j0.009
4	420	0.040 + j0.013
5	860	0.086
6	2980	0.298
	5253	0.4897 + j0.0779

Using the approximate VA Method, $Z_1 = 5253/(100)^2 = 0.5253\ \Omega$.

Using the accurate $R + jX$ Method, $Z_2 = 0.4897 + j0.0779 = 0.4952\ \Omega$.

NOTE—The approximate Z_1 compares favorably with the more accurate Z_2.

3.2.9.1.2 Step b) at 100 A

The CT voltage E_s necessary to produce a secondary current of 100 A through the burden in Step a) is IZ.

$IZ_1 = 100 \times 0.5253 = 52.5$ V

$IZ_2 = 100 \times 0.495 = 49.5$ V

3.2.9.1.3 Step c) at 100 A

From Figure 3-4, find the secondary excitation current I_e at the voltage of 52.5 V.

At $E_s = 52.5$ V, $I_e = 0.06$ A. This voltage is less than 10 A (10% of 100 A), and the relays should operate as expected.

3.2.9.1.4 Further consideration

If any doubt exists, Step b and Step c should be repeated using the maximum primary current of 24 000 A (200 A in secondary).

3.2.9.1.4.1 Step b) at 200 A

The CT voltage E_s necessary to produce a secondary current of 200 A through the burden in Step a) is IZ.

Copyright © 2001 IEEE. All rights reserved.

Copyright The Institute of Electrical and Electronics Engineers, Inc.
Provided by IHS under license with IEEE
No reproduction or networking permitted without license from IHS
Not for Resale

$IZ_1 = 200 \times 0.525 = 105$ V

$IZ_2 = 200 \times 0.495 = 99$ V

3.2.9.1.4.2 Step c) at 200 A

From Figure 3-4, find the secondary excitation current at the voltage of 105 V. At E_s = 105 V, I_e = 0.11 A. Again, this voltage is less than 10 A.

Thus, for this application the CT is more than adequate. The result, however, is essentially the same regardless of the calculation method used.

3.2.9.2 Example B: Using the 200:5 A tap on the 600:5 multiratio CT

Where the load current is small, selecting a lower ratio CT may be desirable. Using a 200:5 ratio tap provides the same pickup current when the time-overcurrent relay is set for 12 A. Figure 3-4 demonstrates that the accuracy class at 200:5 ratio is no longer C200, but closer to C20. The CT secondary resistance is lower, but all other burden values are assumed to be the same. From Figure 3-4, the CT secondary resistance is now only 0.114 Ω at 25 °C.

Recalculating the burden of the devices, but using the lower CT resistance:

Device	Impedance
1	0.0317 + j0.0412
2	0.003 + j0.0147
3	0.031 + j0.009
4	0.040 + j0.013
5	0.086
6	0.114
Total Z = 0.3057 + 0.0779 = 0.3155 Ω	

The voltage required for the 200:5 ratio tap is 0.3155 × 100 = 31.6 V.

From Figure 3-4 for 31.6 V, the excitation current I_e = 0.4 A is less than the maximum error current of 10 A (10% of 100 A).

For this application at 100 A secondary fault current (4000 A in the primary), the 200:5 ratio appears to be adequate with operation slightly above the knee of the excitation curve for the relaying involved. However, because the actual fault current is 24 000 A (120 times CT rating), the calculation should be repeated using this value.

I_{sec} = 24 000/200:5 = 600 A

Copyright © 2001 IEEE. All rights reserved.

Copyright The Institute of Electrical and Electronics Engineers, Inc.
Provided by IHS under license with IEEE
No reproduction or networking permitted without license from IHS Not for Resale

The voltage required by the burden for the 200:5 ratio is $0.3155 \times 600 = 189$ V. The CT goes into saturation because this voltage is beyond the ability of the 200:5 ratio. A higher CT ratio should be used.

3.2.10 Saturation

Abnormally high primary fault currents, primary fault currents having a dc offset, residual flux, high secondary burden, or a combination of these factors results in the creation of high flux density in the CT iron core. When this density reaches or exceeds the design limits of the core, saturation results. At this point, the accuracy of the CT becomes poor, and the output waveform may be distorted by harmonics. Saturation results in the production of a secondary current lower in magnitude than would be indicated by the CT ratio. The severity of this transformation error varies with the degree of saturation. With total saturation, virtually no secondary current flows past the first quarter cycle.

For example, selective coordination of protective devices may not occur if CTs on a branch circuit saturate. Tripping of the branch circuit breaker may be delayed or may not even occur. Such an event would result in the operation of the line-side main circuit breaker and result in an more extensive outage than should have occurred. Instantaneous overcurrent relays may not even trip (see Linders, et al. [B3]) where the fault currents are high, and bus differential relays may falsely trip on through faults.

To avoid or minimize saturation effects, the secondary burden should be kept as low as possible. Where fault currents of more than 20 times the CT nameplate rating are anticipated, a different CT, different CT ratio, or a lower burden may be required. A comprehensive review of saturation and its effect on the transient response of CTs is presented in IEEE Special Publication 76CH1130-4PWR.

3.2.11 Auxiliary CTs

Auxiliary CTs may be required to

— Match the winding ratio of another CT,
— Provide different ratios from those that are available,
— Provide a phase shift in the current, or
— Isolate the circuit

They should be used only to step-down the current, where possible, as this connection or action reflects a lower burden into the main CT. For a burden Z_B in the secondary of an auxiliary CT, the corresponding burden Z'_B in the secondary of the main CT (see Figure 3-10) is given by the expression,

$$Z'_B = \frac{Z_B}{N^2}$$

Copyright © 2001 IEEE. All rights reserved.

Copyright The Institute of Electrical and Electronics Engineers, Inc.
Provided by IHS under license with IEEE
No reproduction or networking permitted without license from IHS
Not for Resale

where

N is the ratio of the auxiliary CT.

Thus for a step-down ratio of 10:5, $N = 2$ and $Z'_B = 0.25\ Z_B$. However, for a step-up ratio of 5:10, $N = 0.5$ and $Z'_B = 4.0\ Z_B$. The step-down CT should be used whenever possible because it reduces the burden of the connected devices on the main CT (see Dudor and Padden [B3]).

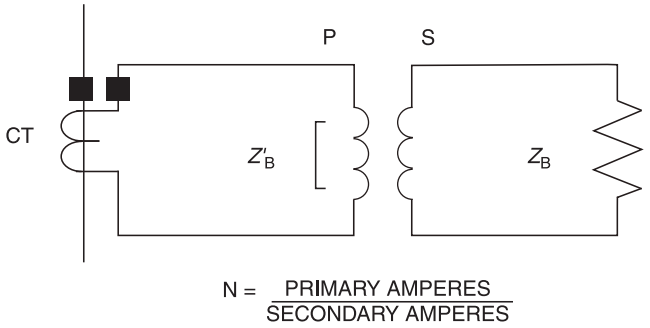

Figure 3-10—Auxiliary CTs

3.2.12 Safety precautions

An important precaution with respect to CTs is that they should never be operated with the secondary circuit open because hazardous voltages may result. Any CT that has been subjected to open secondary circuit operation should be examined for possible damage before being placed back in service. A voltage-limiting device may be installed to reduce the hazards of open secondary circuits.

3.3 Voltage (potential) transformers (VTs)

A VT is basically a conventional transformer with primary and secondary windings on a common core. Standard VTs are single-phase units designed and constructed so that the secondary voltage maintains a fixed relationship with primary voltage. The required rated primary voltage of a VT is determined by the voltage of the system to which it is to be connected and by the way in which it is to be connected (e.g., line to line, line to neutral). Most VTs are designed to provide 120 V at the secondary terminals when nameplate-rated voltage is applied to the primary. Standard ratings are shown in Table 3-5 and Table 3-6. Special ratings are available for applications involving unusual connections.

VTs are capable of continuous and accurate operation when the voltage applied across the primary is within ±10% of the rated primary voltage.

Copyright © 2001 IEEE. All rights reserved.

Copyright The Institute of Electrical and Electronics Engineers, Inc.
Provided by IHS under license with IEEE
No reproduction or networking permitted without license from IHS
Not for Resale

Table 3-5—Ratings and characteristics of VTs with 100% of rated primary voltage across the primary winding when connected line to line or line to ground

Rated primary voltage for rated voltage line to line (V)	Marked ratio	Basic impulse insulation level (kV crest)
120 for 208 Y	1:1	10
240 for 416 Y	2:1	10
300 for 520 Y	2.5:1	10
120 for 208 Y	1:1	30
240 for 416 Y	2:1	30
300 for 520 Y	2.5:1	30
480 for 832 Y	4:1	30
600 for 1040 Y	5:1	30
2400 for 4160 Y	20:1	60
4200 for 7280 Y	35:1	75
4800 for 8320 Y	40:1	75
7200 for 12 470 Y	60:1	110 or 95
8400 for 14 560 Y	70:1	110 or 95

Table 3-6—Ratings and characteristics of VTs primarily for line-to-line service[a]

Rated primary voltage for rated voltage line to line (V)	Marked ratio	Basic impulse insulation level (kV crest)
120 for 120 Y	1:1	10
240 for 240 Y	2:1	10
300 for 300 Y	2.5:1	10
480 for 480 Y	4:1	10
600 for 600 Y	5:1	10
2400 for 2400 Y	20:1	45
4800 for 4800 Y	40:1	60
7200 for 7200 Y	60:1	75
12 000 for 12 000 Y	100:1	110 or 95
14 000 for 14 000 Y	120:1	110 or 95
24 000 for 24 000 Y	200:1	150 or 125
34 500 for 34 500 Y	300:1	200 or 150

[a]May be applied line to ground or line to neutral at a winding voltage equal to the primary voltage rating divided by $\sqrt{3}$.

Copyright © 2001 IEEE. All rights reserved.

Copyright The Institute of Electrical and Electronics Engineers, Inc.
Provided by IHS under license with IEEE
No reproduction or networking permitted without license from IHS
Not for Resale

Standard accuracy classifications of VTs range from 0.3 to 1.2, representing percent ratio corrections to obtain a true ratio. These accuracies are high enough so that any standard transformer is adequate for most industrial protective relaying purposes as long as it is applied within its open-air thermal and voltage limits. Standard burdens for VTs with a secondary voltage of 120 V are shown in Table 3-7.

Table 3-7—Standard burdens for VTs

Characteristics on standard burdens[a]			Characteristics on 120 V basis		
Designation	**Volt-amperes**	**Power factor**	**Resistance (Ω)**	**Inductance (mH)**	**Impedance (Ω)**
W	12.5	0.10	115.2	3.04	1152
X	25	0.70	403.2	1.09	576
Y	75	0.85	163.2	0.268	192
Z	200	0.85	61.2	0.101	72
ZZ	400	0.85	30.6	0.0503	36
M	35	0.20	82.3	1.07	411

[a]These burden designations have no significance except at 60 Hz.

Thermal burden limits, as given by transformer manufacturers, should not be exceeded in normal practice because transformer accuracy and life will be adversely affected. Thermal burdens are given in voltamperes and may be calculated by simple arithmetic addition of the voltampere burdens of the devices connected to the transformer secondary. If the sum is within the rated thermal burden, the transformer should perform satisfactorily over the range of voltages from 0% to 110% of the nameplate voltage.

Polarity on VTs is normally identified by marking a primary terminal H_1 and a secondary terminal X_1. Alternatively, these points may be identified by distinctive color markings. The standard voltage relationship provides that the instantaneous polarities of H_1 and X_1 are the same.

Where balanced system load and, therefore, balanced voltages are anticipated, VTs are usually connected in open delta. Where line-to-neutral loading is expected, VTs are more often connected wye-wye, particularly where metering is required. Many protective devices require specific delta or wye voltages; therefore, specific requirements should be studied before choosing the connection scheme. Wye-delta or delta-wye connections are occasionally used with certain special relays, but these connections are infrequent in industrial use. Where ungrounded power systems are used, VTs connected wye-broken-delta are sometimes used for ground detection. When so connected, the transformers can seldom be used for any other purpose. Broken-delta connections used on ungrounded systems should normally include a loading resistor in the secondary to mitigate possible ferroresonance between the system capacitance and the VT. (See Fink and Beaty [B5] and Linders, et al.[B3])

Copyright © 2001 IEEE. All rights reserved.

--`,,`-`-`,,`,,`,`,,`---

Copyright The Institute of Electrical and Electronics Engineers, Inc.
Provided by IHS under license with IEEE
No reproduction or networking permitted without license from IHS Not for Resale

The application of fuses to VT circuits has been a subject of discussion for many years. The main purpose of a VT primary fuse is to protect the power system by de-energizing failed VTs. General practice now calls for a current-limiting fuse or equivalent in the system. Figure 3-11 shows a typical VT with fuses.

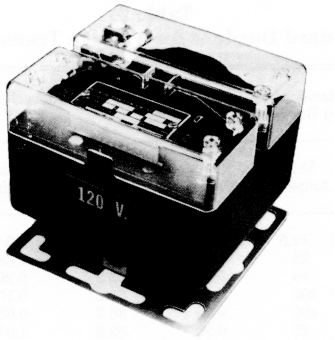

Figure 3-11—Typical VT

VT secondary fusing practices cannot be so clearly defined. It is usually impossible to select primary fuses that protect the transformer from most overloads or faults in the external secondary circuit. Secondary fuses selected to interrupt at loadings below the thermal burden rating can provide such protection. Where branch circuits are tapped from VT secondaries to supply devices located at a distance from the VT, it may be desirable to fuse the branch at a reduced rating.

3.4 References

This recommended practice shall be used in conjunction with the following standards. When the following standards are superseded by an approved revision, the revision shall apply.

IEEE Std C57.13-1993, IEEE Standard Requirements for Instrument Transformers.

3.5 Bibliography

[B1] *Applied Protective Relaying*. Newark, NJ: Westinghouse Electric Corporation, 1976.

[B2] Blackburn, J. L., *Protective Relaying, Principles and Applications*, 2nd ed. New York: Marcel Dekker, Inc., 1998.

[B3] Dudor, J. S., and Padden, L. K., "Protective Relay Applications for Generators and Transformers," *IEEE Industry Applications Magazine*, pp. 22–35, Jul./Aug. 1997.

[B4] *Electric Utility Engineering Reference Book: Vol. 3, Distribution Systems*. Trafford, PA: Westinghouse Electric Corporation, 1965.

Copyright © 2001 IEEE. All rights reserved.

Copyright The Institute of Electrical and Electronics Engineers, Inc.
Provided by IHS under license with IEEE
No reproduction or networking permitted without license from IHS
Not for Resale

[B5] Fink, D. G., and Beaty, H. W., *Standard Handbook for Electrical Engineers*. New York: McGraw-Hill, 1993.

[B1] IEEE Special Publication 76CH1130-4PWR, "Transient Response of Current Transformers," A summary report and discussion, *IEEE Transactions on Power Apparatus Systems*, PAS 96, pp. 1809–1814, Nov./Dec. 1977.[3]

[B2] *Instrument Transformer Burden Data*. Schenectady, NY: General Electric Company, GET-1725, 1961.

[B3] Linders, J. R., et al., "Relay Performance Considerations with Low-Ratio CT's and High-Fault Currents," *IEEE IAS Transactions on Industry Applications*, vol. 31, pp. 392–404, Mar./Apr. 1995.

[B4] *Manual of Instrument Transformers*. Schenectady, NY: General Electric Company, GET-97, 1975.

[B5] Mason, C. R., *The Art and Science of Protective Relaying*. New York: John Wiley & Sons, 1956. Reprinted by General Electric Company, GER-3738.

[B6] Powell, L. J., Jr., "Current Transformer Burden and Saturation," *IEEE IAS Transactions on Industry Applications*, vol. 15, pp. 294–303, May/June 1979.

[B7] West, D. J., "Current Transformer Application Guidelines," Conference Record, IAS-I&CPS Technical Conference, Pittsburgh, Paper 77CH1198-11A, May 1977.

[3]IEEE publications are available from the Institute of Electrical and Electronics Engineers, 445 Hoes Lane, P.O. Box 1331, Piscataway, NJ 08855-1331, USA (http://standards.ieee.org/).

 Copyright © 2001 IEEE. All rights reserved.

--`,,`,,`-`-`,,`,,`,`,,`---

Copyright The Institute of Electrical and Electronics Engineers, Inc.
Provided by IHS under license with IEEE
No reproduction or networking permitted without license from IHS Not for Resale

Chapter 4
Selection and application of protective relays

4.1 General discussion of a protective system

Power systems should be designed so that protective relays operate to sense and isolate faults quickly to limit the extent and duration of service interruptions. Protective relays are important in industrial power systems because they can prevent large losses of production due to unnecessary equipment outages or unnecessary equipment damage occurring as a result of a fault or overload. Other considerations are safety, property losses, and replacements. Protective relays have been called the watchdogs or silent sentinels of a power system.

Protective relays are classified by the variable they monitor or by the function they perform. For instance, an overcurrent relay senses current and operates when the current exceeds a predetermined value. Another example is a thermal overload relay that senses the temperature of a system component, either directly or indirectly (as a function of current), or both, and operates when the temperature is above a rated value.

The application of relays is often called an art rather than a science because judgment is involved in making selections. The selection of protective relays requires compromises between conflicting objectives, while maintaining the capability of operating properly for several system operating conditions. These compromises include providing

a) Maximum protection
b) Minimum equipment cost
c) Reliable protection
d) High-speed operation
e) Simple designs
f) High sensitivity to faults
g) Insensitivity to normal load currents
h) Selectivity in isolating a minimum portion of the system

Planning for the protection system should be considered in the power system design stage to ensure that a good system can be implemented. The cost of applying protective relays should be balanced against the potential costs of not providing protection.

Electromechanical relays have been used for over 60 years to provide power system protection. They are known for their reliability, low maintenance, and long life of operation. However, since the early 1960s, static relays have been used in an increasing number of applications. Static relays provide the advantages of lower burden, improved dynamic performance characteristics, high seismic withstand capability, self-monitoring, multifunctionality, system monitoring, and reduced panel space requirements.

Many of the protection functions can be accomplished equally well by either electromechanical or static relays. The specific application should dictate which type of relay is used.

Copyright © 2001 IEEE. All rights reserved.

Copyright The Institute of Electrical and Electronics Engineers, Inc.
Provided by IHS under license with IEEE
No reproduction or networking permitted without license from IHS
Not for Resale

The various protective relay functions have been given identifying device function numbers, with appropriate suffix letters when necessary. All of these numbers are listed in IEEE Std C37.2-1996[1] and are used in diagrams, instruction books, and specifications. Many possible numbers can be used; but, for convenience, only the ones most commonly used are listed in Table 4-1, along with the function that each number represents.

Table 4-1—Abbreviated list of commonly used relay device function numbers

Relay device function number	Protection function
21	Distance
25	Synchronizing
27	Undervoltage
32	Directional power
40	Loss of excitation (field)
46	Phase balance (current balance, negative-sequence current)
47	Phase-sequence voltage (reverse phase voltage)
49	Thermal (generally thermal overload)
50	Instantaneous overcurrent
51	Time-overcurrent
59	Overvoltage
60	Voltage balance (between two circuits)
67	Directional overcurrent
81	Frequency (under and overfrequency)
86	Lockout
87	Differential

Table 4-2 lists the commonly used suffix letters applied to each number denoting the circuit element being protected or the application. Each of the relay types listed in Table 4-1 is discussed in some detail in this chapter, along with their operating principles and applications.

[1]Information about references can be found in 4.5.

Copyright © 2001 IEEE. All rights reserved.

Copyright The Institute of Electrical and Electronics Engineers, Inc.
Provided by IHS under license with IEEE
No reproduction or networking permitted without license from IHS Not for Resale

Table 4-2—Commonly used suffix letters applied to relay function numbers

Suffix letter	Relay application[a]
A	Alarm only
B	Bus protection
G	Ground-fault protection [relay current transformer (CT) in a system neutral circuit] or generator protection
GS	Ground-fault protection (relay CT is toroidal or ground sensor)
L	Line protection
M	Motor protection
N	Ground-fault protection (relay coil connected in residual CT circuit)
T	Transformer protection
V	Voltage

[a]Examples:
(1) 87T, transformer differential relay
(2) 51G, time-overcurrent relay used for ground-fault protection
(3) 49M, motor winding overload (or over-temperature) relay
(4) 87B, bus differential relay or partial bus differential relay (also called summation differential)

4.2 Zones of protection

A separate zone of protection is normally established around each system element. This practice logically divides the system into protective zones for generators, transformers, buses, transmission lines, distribution lines or cable circuits, and motors. Any failure occurring within a protection zone sends a trip signal to circuit breakers serving that zone to isolate the faulted equipment from the rest of the system.

Protection zones are classified as primary and/or backup. The primary protective relays are the first line of defense against system faults and operate first to isolate the fault. Typically, high-speed relays (i.e., 1 cycle to 3 cycles exclusive of breaker operating time) with high drop-out rates are applied in these applications.

When a fault is not isolated after some time delay, backup protection clears the faulted equipment by retripping the primary circuit breakers or by tripping circuit breakers in adjacent zones. When adjacent zones are tripped by backup protective relays, more of the power system is removed from service.

Backup protection can be either local or remote. Local backup protection is located within the zone in which the fault occurs, and trips either the primary circuit breaker or circuit breakers in adjacent zones. Remote backup protection is located in adjacent zones and generally only trips circuit breakers in their zone.

Copyright © 2001 IEEE. All rights reserved.

Copyright The Institute of Electrical and Electronics Engineers, Inc.
Provided by IHS under license with IEEE
No reproduction or networking permitted without license from IHS
Not for Resale

The protection zones generally overlap to ensure no portion of the power system is left unprotected. Also, primary and backup protection systems should be selectively coordinated by current magnitude, time, fault type, direction, temperature, etc.

4.3 Fundamental operating principles

Protective relays generally operate in response to one or more electrical quantities to open or close contacts or to trigger thyristors. (An exception is a thermal relay, which operates in response to temperature levels.) Relays are constructed using either electromechanical or static principles.

4.3.1 Electromechanical relay operating principle

Electromechanical relays have only two operating principles:

— Electromagnetic attraction
— Electromagnetic induction

Electromagnetic attraction relays operate by having either a plunger drawn by a solenoid or an armature drawn to a pole of an electromagnet. This type of relay operates from either an ac or a dc current or voltage source and is used for instantaneous or high-speed tripping.

Electromagnetic induction relays use the principle of the induction motor, where torque is developed by induction into a rotor. This principle is used in an electromechanical watthour meter, where the rotor is a disk. The actuating force developed on the rotor is a result of the interaction of the electromagnetic fluxes applied and the flux produced by eddy currents that are induced in the rotor.

Induction relays can only be used in ac applications, and the rotor is normally a disk or a cylinder. Time-overcurrent, time-undervoltage, and time-overvoltage relays commonly are of the disk design, while cup (cylinder) structures are often found in high-speed overcurrent, directional, differential, and distance relays.

4.3.2 Static relay operating principle

Static relays are either analog or digital. Static analog relays were first introduced in the early 1960s and were typically designed to emulate the characteristics of their electromechanical counterparts. Soon, digital technology was implemented in relay design with characteristics available that were outside the capabilities of the electromechanical design.

Operation of the static design converts input signals to an appropriate magnitude for measurement within the relay, which is in direct proportion to the system signal. The measured value is then compared against a predetermined setting. Timing and other characteristics are derived from either the analog circuit design or algorithms within a microprocessor.

 Copyright © 2001 IEEE. All rights reserved.

Copyright The Institute of Electrical and Electronics Engineers, Inc.
Provided by IHS under license with IEEE
No reproduction or networking permitted without license from IHS Not for Resale

4.4 Functional description—application and principles

4.4.1 Distance relay (Device 21)

4.4.1.1 Application

Distance relays are widely used for primary and backup protection on subtransmission and transmission lines where high-speed relaying is desired, normally on circuits having voltages above 34.5 kV. Other applications include generator backup protection for faults on the system and startup of large motors with high inertia (see Chapter 10).

4.4.1.2 Operation principles

Distance relay is a generic term applied to impedance relays that use voltage and current inputs to provide an output signal if a fault is within a predetermined distance from the relay location. Distance to the fault is calculated from the voltage-to-current ratio as a measure of impedance, from the imaginary component of the voltage-to-current ratio as a measure of reactance, or from the current-to-voltage ratio as a measure of the admittance. The major advantage of a distance relay is that it responds to system impedance instead of the magnitude of current. Thus, the distance relay has a fixed distance reach as contrasted with overcurrent relays for which the reach varies as short-circuit levels and system configurations change.

Electromechanical distance relays utilize an induction cup construction to achieve operating times of 1 cycle to 1.5 cycles. Static distance relays have an inherent operating time of 0.25 cycle to 0.5 cycle. A fixed time delay is added when required for selectivity.

Distance relay characteristics can be shown graphically in terms of two variables, R and X (or Z and θ), where R is the resistance, X is the reactance, Z is the impedance, and θ is the angle by which current lags voltage. The relay characteristics and the line impedance can be plotted on the same R-X diagram for analysis. In examining R-X diagrams, it should be recalled that regions of positive R and X represent impedances in a defined tripping direction, while the third quadrant (negative R and X) contain impedance behind the relay, or in the nontripping direction. The origin of the R-X diagram is placed at the relay location, which is defined by the location of its CTs and voltage transformers (VTs).

4.4.1.3 Reactance distance relay

Reactance relays measure the reactive component of system complex impedance. A generic reactance relay characteristic appears on the R-X diagram as a straight line parallel to the R-axis, as shown in Figure 4-1.

Operation of the generic reactance relay occurs when the reactance from the relay to the point of fault, X_2 in Figure 4-1, is less than or equal to the reactance X_1. Reactance X_1 is the reactance setting of the relay. The relay also responds to any reactance in the negative direction. Reactance relays are inherently nondirectional. Operation is practically unaffected by arc resistance, but reactance relays may operate on load current and hence should be used in

Copyright © 2001 IEEE. All rights reserved.

--`,,`-`-`,,`,,`,`,,`---

Copyright The Institute of Electrical and Electronics Engineers, Inc.
Provided by IHS under license with IEEE
No reproduction or networking permitted without license from IHS
Not for Resale

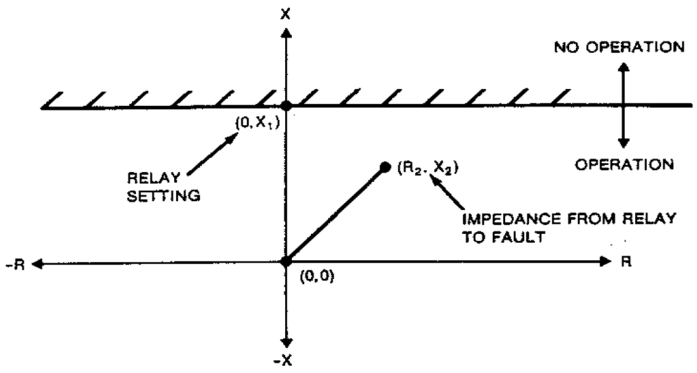

Figure 4-1—R-X diagram for the generic reactance relay

conjunction with other relays to restrict their reach along the *R*-axis and in the reverse, negative-reactance direction.

4.4.1.4 Impedance distance relay

The impedance relay measures the magnitude of the complex impedance. The generic impedance relay characteristic is a circle on the *R-X* diagram as shown in Figure 4-2.

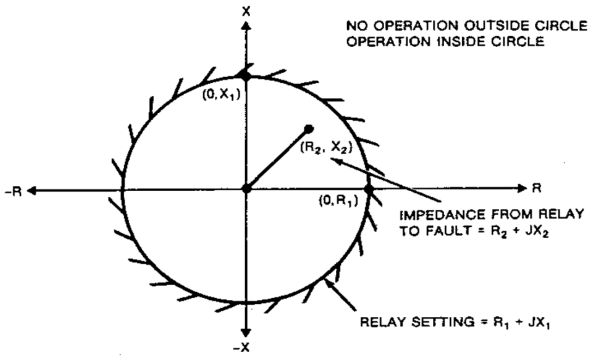

Figure 4-2—R-X diagram for the generic impedance relay

Operation of the generic impedance relay occurs when the resistance and reactance (impedance) from the relay to the point of fault, $Z_2 = R_2 + JX_2$ in Figure 4-2, lies within the circle having radius $\sqrt{R_1^2 + X_1^2}$, impedance $Z_1 = R_1 + JX_1$, is the setting on the relay.

To make the impedance relay directional, the generic impedance relay should be used in conjunction with other relays to restrict their reach in the reverse direction (i.e., third quadrant of the *R-X* diagram).

Copyright © 2001 IEEE. All rights reserved.

Copyright The Institute of Electrical and Electronics Engineers, Inc.
Provided by IHS under license with IEEE
No reproduction or networking permitted without license from IHS
Not for Resale

4.4.1.5 Mho distance relay

An mho relay measures complex admittance, but unlike impedance relays, mho relays are directional. The mho distance relay has a circular characteristic, as shown in Figure 4-3.

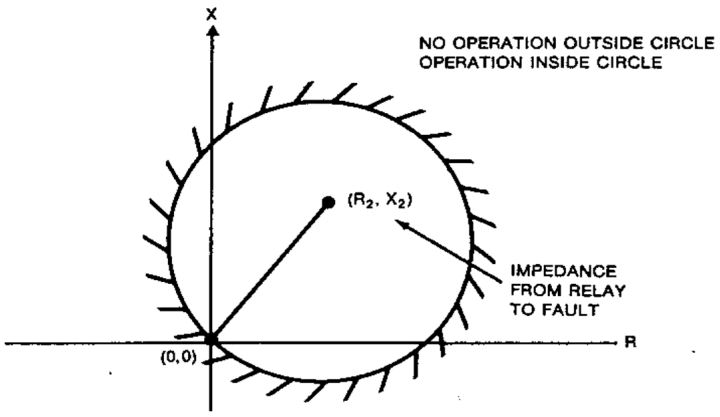

Figure 4-3—R-X diagram for the mho relay

Relay operation occurs when the impedance from the relay to the fault, $Z_2 = R_2 + JX_2$ in Figure 4-3, lies inside the mho characteristic. Because the circular characteristic falls mainly in the first quadrant of the *R-X* diagram, the mho relay is directional.

For special applications, a mho characteristic may be shifted in either forward or reverse directions. For loss of field applications (see 4.4.5), the mho relay characteristic is centered on the *X*-axis, with its center offset in the negative direction from the *R*-axis, as shown in Figure 4-4a.

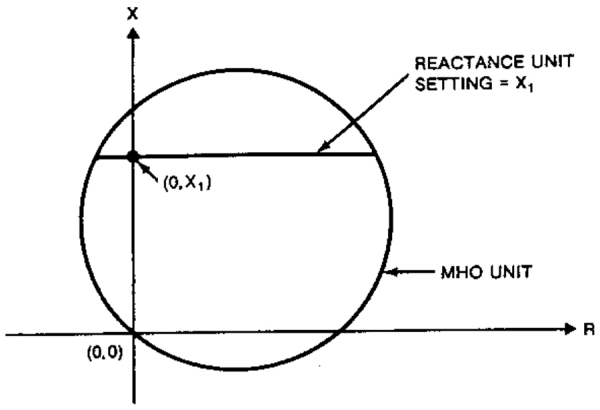

Figure 4-4a—R-X diagram for mho relay being applied as a loss-of-field relay for a synchronous generator

Copyright © 2001 IEEE. All rights reserved.

Copyright The Institute of Electrical and Electronics Engineers, Inc.
Provided by IHS under license with IEEE
No reproduction or networking permitted without license from IHS
Not for Resale

4.4.1.6 Mho-supervised reactance relay characteristic

For applications on short lines, a composite consisting of an ohm (reactance) unit and a mho unit in one case is often used. The mho unit, called the starting unit, provides a directional function. The tripping contacts of the mho unit and ohm unit are in series so that relay tripping is confined to the areas where both characteristics overlap (see Figure 4-4b).

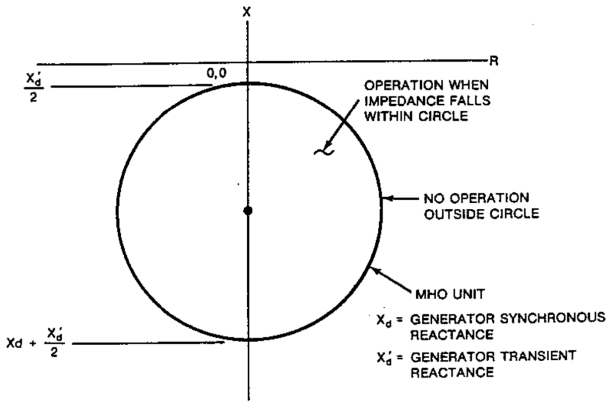

Figure 4-4b—R-X diagram for the mho-supervised reactance relay

A trip signal occurs if the reactance from the relay to the point of fault is less than or equal to X_1 and the impedance from the relay to the fault is within the mho characteristic.

4.4.1.7 Directional impedance relay characteristic

One type of directional impedance relay that is sometimes used is shown in Figure 4-5. The origin of the relay's circular characteristic is shifted into the first quadrant, and a directional element is added. Breaker tripping occurs when the impedance between the relay and the fault is within the relay's unshaded circular characteristic. Many other characteristic shapes have been used over the past several years. Many of these shapes are known by the name of the item that they resemble (e.g., ice cream cone, tomato). Each of these various characteristics were developed to more closely match the characteristics of the line to eliminate unwanted operations.

4.4.2 Synchronism check and synchronizing relays (Device 25)

4.4.2.1 Application

Synchronism check and automatic synchronizing relays are applied when two or more sources of power are to be connected to a common bus (see Figure 4-6a and Figure 4-6b). The success of connecting two sources together depends largely upon securing small and preferably diminishing differences in the voltage magnitudes, phase angles, and frequencies of the two sources at the time they are to be connected together.

Copyright © 2001 IEEE. All rights reserved.

--`,,`-`-`,,`,,`,`,,`---
Copyright The Institute of Electrical and Electronics Engineers, Inc.
Provided by IHS under license with IEEE
No reproduction or networking permitted without license from IHS
Not for Resale

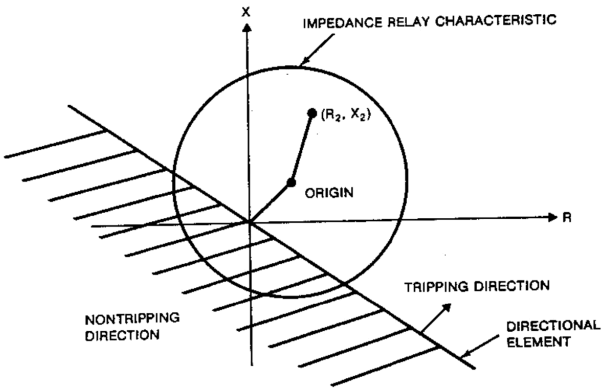

Figure 4-5—R-X diagram for a directional impedance relay

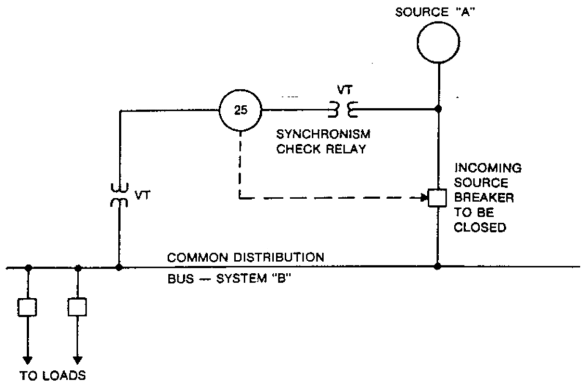

Figure 4-6a—Application of synchronism check relay to connect two systems together

Synchronism check (also called sync-check or syncro-verifier) relays permit automatic or manual closing of a circuit breaker or switches only when the systems on each side of the devices are within the setting criteria of the relay (see Figure 4-6a). Sync-check relays are typically applied for supervision of manual closing on small generators, as backup protection for automatic synchronizing of larger generators, and at locations where the system may become separated and loss of synchronism between the two resulting systems may occur.

Automatic synchronizing relays may be used to automatically close or supervise the closing of a circuit breaker whose function is to connect a generator to a system or to connect two separate systems (see Figure 4-6b). The same automatic synchronizing relay may be used to control more than one circuit breaker at a station by switching the relay wiring to the potential and control circuits of the unit being synchronized.

Copyright © 2001 IEEE. All rights reserved.

Copyright The Institute of Electrical and Electronics Engineers, Inc.
Provided by IHS under license with IEEE
No reproduction or networking permitted without license from IHS
Not for Resale

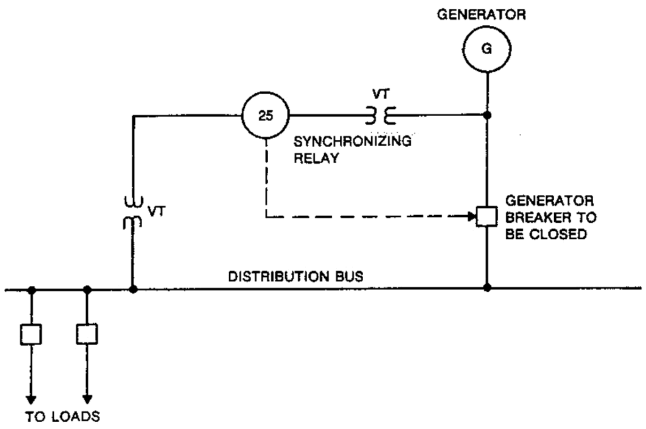

Figure 4-6b—Application of synchronizing relay to connect a generator onto a system bus

Manual synchronization requires training, use of good judgment, experience, and the careful attention of the operator. Switchgear and generating equipment have been damaged as a result of misjudgment by an operator. Bent shafts of industrial-size turbine generators occur all too often when operators close circuit breakers when the systems are too far out of phase. Therefore, manual synchronizing is not recommended unless it is supervised with a relay that performs a synchronizing verification.

4.4.2.2 Synchronism check (sync-check) relays

Recommended practice promotes the use of a sync-check relay as a permissive device to supervise manual or automatic closing of a circuit breaker or switch between two systems. In this scheme, as shown in Figure 4-6a, a normally open contact of a sync-check relay in series with the circuit breaker's or switch's closing circuit prohibits the closing of the device when system conditions are outside the setting criteria of the relay and minimizes the risk of equipment damage.

Relay supervision of manual synchronism is accomplished in the following way: The operator performs all the normal manual synchronizing functions, but cannot complete the circuit breaker close circuit until the relay senses that the systems are in synchronism. When the operator is satisfied that the systems are in synchronism, the device's closing switch is operated to connect the two sources together. The relay monitors the voltages on each side of the device; and when the phase-angle and voltage difference between the two systems are within the preset values for a defined period, the relay's normally open contact closes and allows closure of the device.

The period, which is adjustable on the relay, defines the allowable system slip rate. The shorter the period, the higher the slip rate allowed. High slip rates or a late closing signal could permit the sources to be connected at an angle greater than the desired closing angle. This situation can lead to possible equipment damage because the system may be out of

Copyright © 2001 IEEE. All rights reserved.

Copyright The Institute of Electrical and Electronics Engineers, Inc.
Provided by IHS under license with IEEE
No reproduction or networking permitted without license from IHS Not for Resale

synchronism by the time the device actually closes its contacts. Therefore, a longer period is normally used to require a lower slip rate between the two systems.

Sync-check relays are available with fixed and adjustable closing angles. Adjustable closing angles are typically set between 10° and 30° and are centered around 0° phase angle (i.e., a phase-angle setting of 20° would produce a total window of 40° centered about zero). However, static synch-check relays are available, which provide dynamic phase-angle window settings. In this case (Figure 4-6c), the phase angle can be selected from one of four options:

— Phase-angle window only on the fast side
— Phase-angle window only on the slow side
— Phase-angle window on either side with the window dynamically changing based on the rotational direction of the synchroscope needle
— The traditional method with the total phase-angle window centered about zero, regardless of rotational direction

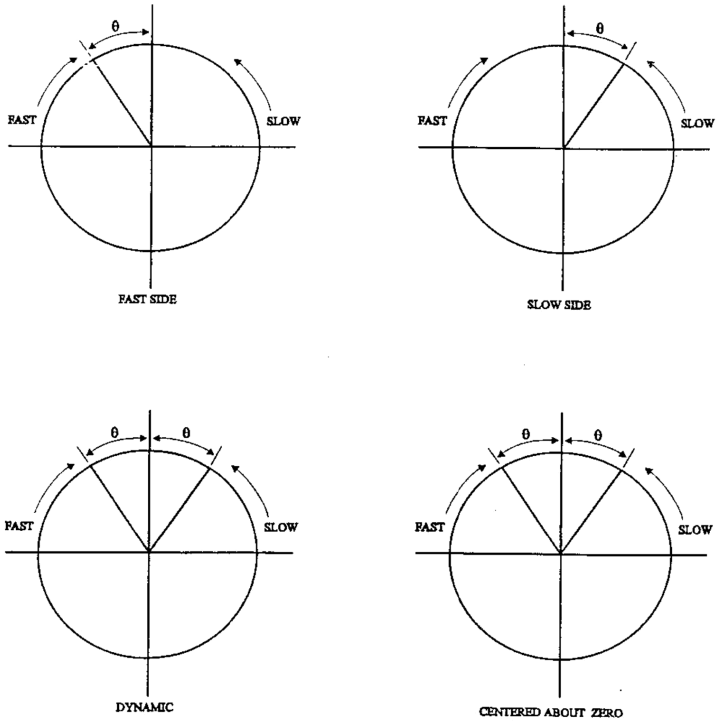

Figure 4-6c—Application of synchronizing relay dynamic characteristic

Limiting the phase-angle window to only one side of the synchroscope limits the possible damage caused as the result of a slow-closing device receiving a close signal just prior to exiting the trailing edge of the window. For example, in Figure 4-6d, the phase-angle setting is ±20° with a time-delay setting of 1.388 s. These parameters provide for a slip setting of 0.08 Hz, derived as follows:

Copyright © 2001 IEEE. All rights reserved.

Copyright The Institute of Electrical and Electronics Engineers, Inc.
Provided by IHS under license with IEEE
No reproduction or networking permitted without license from IHS
Not for Resale

$$T = \frac{40^{\circ} \times 60 \text{ s/min}}{360^{\circ} \times 4.8 \text{ rpm}}$$

$$T = 1.388$$

where

Slip (Hz) = Cycle/s = Rev/s

$$\frac{\text{Rev}}{\text{s}} \times \frac{60\text{s}}{\text{min}} = \frac{\text{Rev}}{\text{min}}$$

Slip × 60 = rpm (rev/min)

Assuming 0.08 Hz slip,

rpm = 0.08 × 60 = 4.8

and

$$\frac{360^{\circ}}{1 \text{ Rev}} \times \frac{\text{Rev}}{\text{min}} \times \frac{1 \text{ min}}{60 \text{ sec}} \times T = \text{Angle}(^{\circ})$$

Therefore,

$$360^{\circ} \times \frac{4.8}{60 \text{ s}} \times T = 40^{\circ}$$

$$T = \frac{40^{\circ} \times 60}{360^{\circ} \times 4.8} = 1.388 \text{ s}$$

These settings mean that the two systems should be no further than 20º apart with a slip of not more than 0.08 Hz.

Sync-check relays can also be programmed to provide automatic closing under certain conditions. Most sync-check relays have the capability of providing automatic closing when one or more of the following conditions occur:

— Live line/dead bus
— Dead line/live bus
— Live line/live bus
— Dead line/dead bus

If any of these condition switches are selected, and that condition occurs, the relay provides a close signal without the function of synchronism verification. These condition switches allow

Copyright © 2001 IEEE. All rights reserved.

--`,,`-`-`,,`,,`,`,,`---

Copyright The Institute of Electrical and Electronics Engineers, Inc.
Provided by IHS under license with IEEE
No reproduction or networking permitted without license from IHS Not for Resale

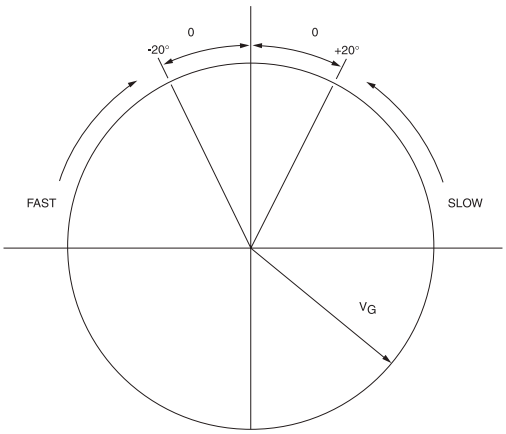

Figure 4-6d—Application of synchronizing relay

greater system flexibility to regain load quickly where no danger exists in closing without synchronization. Care should be taken when selecting these condition switches to ensure that proper synchronization is applied elsewhere when a dead line or bus is automatically energized.

4.4.2.3 Automatic synchronizing relays

An automatic synchronizing relay is used for synchronizing an incoming generator to a power system. Automatic synchronizing is applied to generating equipment where the station is unattended; where the element of human error should be ruled out in the start-up procedures of a generating unit; or where consistent, accurate, and rapid synchronization is preferred. The relays used are multifunctional devices that sense the differences in phase angle, voltage magnitude, and frequency of the sources on both sides of an incoming generator breaker and initiate corrective signals to the prime mover and field in order to adjust the generator frequency and voltage until the systems are in synchronism.

Most automatic synchronizing relays can anticipate an advance angle at which to initiate breaker closing so that, when the circuit breaker is closed, the systems are as close to exact synchronism as possible. A synchroscope is used to monitor the synchronizing process. From the time the relay initiates a close signal until the breaker's contacts actually close, the needle travels a certain distance (measured in degrees) around the scope. The distance traveled can be determined based on the speed of rotation and how long it was permitted to rotate. The scope's needle rotates at a speed that is directly proportional to the slip frequency between the generator and the system. Therefore, given the circuit breaker's closing time and the desired slip rate, the rotational distance traveled (or *advance closing angle*) can be determined.

Copyright © 2001 IEEE. All rights reserved.

--`,,`-`-`,,`,,`,`,,`---

Copyright The Institute of Electrical and Electronics Engineers, Inc.
Provided by IHS under license with IEEE
No reproduction or networking permitted without license from IHS
Not for Resale

When the generator is to be connected to the system, the appropriate synchronizing switch is selected and closed. The synchronizing equipment performs the following functions automatically:

a) A speed-matching relay element senses the frequency difference between the sources and adjusts the governor with raise or lower signals to control the speed of the incoming generator and thereby matches the frequency of the generator with the frequency of the running system bus.
b) A voltage-matching relay element compares the running system and incoming generator voltages and provides raise or lower signals to the excitation system of the incoming generator so that its voltage matches the running system voltage.
c) As the phase angle between the two systems approaches zero, the relay energizes the circuit breaker's closing circuit at an advance angle determined by the relay so that when the circuit breaker contacts close, the two systems are in synchronism. The synchronizing relay itself has at least two adjustable settings that should be made for correct performance. One adjustment permits the relay to accommodate breaker closing time, for example, 0.05 s to 0.4 s, and one adjustment sets the maximum phase-angle advance, from 0° to 30-40°. The advance closing angle is calculated by the following expression:

$$\theta = 360(st)$$

where

θ is advance angle (°),
s is slip frequency (cycles/s),
t is breaker closing time (s).

For example, for systems coming into synchronism rapidly, that is, $s = 0.5$ cycles/s, the closing circuit should be energized well in advance of synchronism. If the circuit breaker has a 0.15 s closing time, the advance angle required would be 27°. If the slip frequency is much lower, then the advance angle is much smaller. For a 0.1 cycle/s slip frequency, the closing angle is now 5.4°. Thus, precise control of the point of synchronism can be obtained.

Several different schemes for automatic synchronizing can be developed depending on economics, reliability, and operating system requirements. By using electromagnetic relays, several relays are required to perform all functions. Static relays provide all the functions in one unit.

4.4.3 Undervoltage relays (Device 27)

4.4.3.1 Application

An undervoltage relay is calibrated on decreasing voltage to close a set of contacts at a specified voltage. The typical uses for this relay function include

Copyright © 2001 IEEE. All rights reserved.

--`,,`-`-`,,`,,`,`,,`---

Copyright The Institute of Electrical and Electronics Engineers, Inc.
Provided by IHS under license with IEEE
No reproduction or networking permitted without license from IHS Not for Resale

a) *Bus undervoltage protection*. The undervoltage relay may either alarm or trip voltage-sensitive loads, such as induction motors, whenever the line voltage drops below the calibrated setting. A time-delay relay is normally used to enable it to ride through momentary sags and thus prevent nuisance operation. For electromechanical relays, to prevent the inertia (or overtravel) of the time-delay relay from tripping the circuit, an instantaneous undervoltage relay with its contacts connected in series with the time undervoltage relay contacts may also be used to provide a fast reset time.

b) *Source transfer scheme*. The undervoltage relay is used to initiate the transfer and, when desired, retransfer of a load from its normal source to a standby or emergency power source. Due to the possibility of a motor load, this relay has a time delay in order to preclude out-of-synchronism closures.

c) *Permissive functions*. An instantaneous undervoltage relay is used as a permissive device to initiate or block certain action when the voltage falls below the dropout setting.

d) *Backup functions*. A time-undervoltage relay may be used as a backup device following the failure of other devices to operate properly. For example, a long time-delay relay may be used to trip an isolated generator and its auxiliaries if the primary protective devices fail to do so.

e) *Timing applications*. A time-undervoltage relay can be used to insert a precise amount of time delay in an operating sequence. Certain protective functions, such as a negative-sequence overvoltage relay, may require a time delay to prevent nuisance tripping.

4.4.3.2 Operation principles

Undervoltage relays may be either electromechanical or static.

4.4.3.2.1 Electromechanical design

Time-undervoltage relays of the electromechanical design generally use the induction disk principle. When the applied voltage is above the pickup, the normally closed contacts open and are maintained open as long as the voltage remains above the dropout voltage. When the voltage is reduced to the dropout value and below, the relay contacts begin to close. The operating time is inversely related to the applied voltage, and several ranges of time delay are available. Typical operating characteristics are shown in Figure 4-7. Frequency-compensated models are available that maintain constant operating characteristics over a specified range of frequency variation.

Instantaneous undervoltage relays of the electromechanical design are built in two basic types. The first is a high-speed cylinder design that has a dropout time of less than 1.5 cycles and a dropout voltage that can be accurately set over a wide calibration range. In a three-phase design, the relay may also respond to a reverse phase-sequence condition. The second type consists of a dc hinged-armature telephone relay rectified by a full-wave bridge for ac operation. A Zener diode provides for an accurate operating point, the value of which is determined by a rheostat. The dropout voltage is adjustable over a specified range, and the operating time is approximately 1 cycle at 0 V.

Copyright © 2001 IEEE. All rights reserved.

Copyright The Institute of Electrical and Electronics Engineers, Inc.
Provided by IHS under license with IEEE
No reproduction or networking permitted without license from IHS
Not for Resale

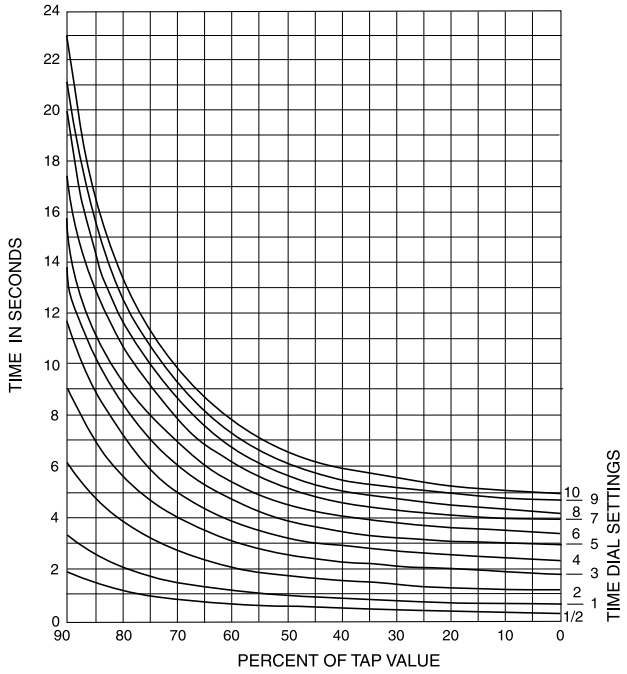

Figure 4-7—Typical time-voltage characteristic of an undervoltage relay

AC electromechanical hinged-armature relays cannot generally be used as undervoltage relays because they would have to remain continuously picked up when voltage is nominal. AC relays operated in this fashion would attempt to drop out every half-cycle (at voltage 0), and the resulting vibration could cause early relay fatigue failure.

The voltage setting for time-delay electromechanical relays is typically adjustable by discrete taps over a specified range. Various tap ranges are available depending on the application. The operating time is adjustable by a time-dial setting. In the induction disk design, it is continuously adjustable. Several ranges of time delay are available. The operating time is specified at zero applied voltage when set on the maximum time-dial setting.

Instantaneous relays have dropout settings that are adjustable over a specified voltage range depending on the application. The method of adjustment varies depending on the construction of the relay.

4.4.3.2.2 Static design

Time-undervoltage relays of the static design provide similar inverse time-operating characteristics as the electromechanical design. Definite time characteristic timing is also available with static relay designs. When the applied voltage is above the pickup (in the de-energized position), a normally open contact is open and remains open as long as the voltage remains above the pickup setting. When the voltage falls below the pickup setting, the relay begins its timing operation. When the time delay has elapsed, based on the time-voltage operating char-

Copyright © 2001 IEEE. All rights reserved.

Copyright The Institute of Electrical and Electronics Engineers, Inc.
Provided by IHS under license with IEEE
No reproduction or networking permitted without license from IHS
Not for Resale

acteristic, the output contacts close. Similar to the electromechanical design, the operating time is inversely related to the applied voltage with several ranges of time delay available. The typical operating characteristics shown in Figure 4-7 also apply to the static design. These relays are also frequency compensated and are capable of withstanding high levels of seismic stress without malfunction.

Voltage settings of static relays vary by manufacturer. They may be adjustable by discrete taps or continuously over a specified range. Various tap ranges may also be available for various applications. The operating time is adjustable by either a time-dial or definite time setting. The definite time setting is typically in units of cycles or seconds.

4.4.4 Directional-power relay (Device 32)

4.4.4.1 Application

As the name implies, a directional-power relay functions when the real power component (watts) flow in a circuit exceeds a preset level in a specified direction. Typical uses for this relay function include

a) *Source power flow control*. On systems having in-plant generation operating in parallel with the utility supply, a reverse-power relay sensing the incoming power from the utility can be set to detect (and alarm or trip) when the generator begins to supply power to the utility company. Plants designed to sell surplus power to the utility would not use a reverse-power relay for this purpose, unless it was blocked by an under-frequency relay.
b) *Antimotoring of generators*. This relay is used to detect the motoring power into a generator that has not been disconnected from the system following a shutdown of its driver. See Chapter 11 for further information.
c) *Reverse power flow*. A sensitive high-speed relay can be used to detect line-to-ground faults on the delta side of a transformer bank (see the examples in Figure 4-8 and Figure 4-9) by detecting the in-phase component of the transformer magnetizing current. This occurs when another relay in the system trips the transformer's primary breaker and the transformer is energized through its secondary circuit.

In applying this relay, the relay operation should be delayed to prevent undesired operations resulting from generator swings relative to the utility. The relay only need be fast enough to permit a successful reclosure from the remote end of the line.

4.4.4.2 Operation principles

Directional-power relays may be either electromechanical or static.

4.4.4.2.1 Electromechanical design

Electromechanical units are available in three types:

Copyright © 2001 IEEE. All rights reserved.

Copyright The Institute of Electrical and Electronics Engineers, Inc.
Provided by IHS under license with IEEE
No reproduction or networking permitted without license from IHS Not for Resale

a) A single-phase induction cup power directional unit with or without an auxiliary timing element
b) A single-phase induction disk power directional element that provides an inherent time delay
c) A polyphase directional unit consisting of three induction disk elements on a common vertical shaft

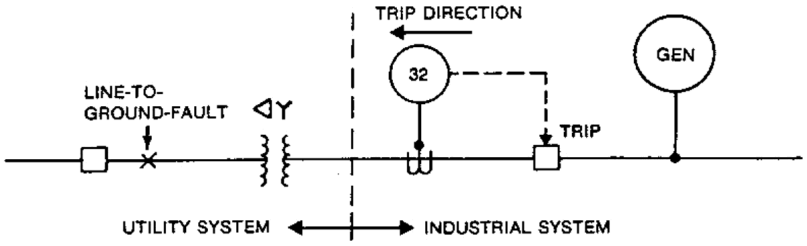

Figure 4-8—Application of directional power relay used to detect line-to-ground faults (Example 1)

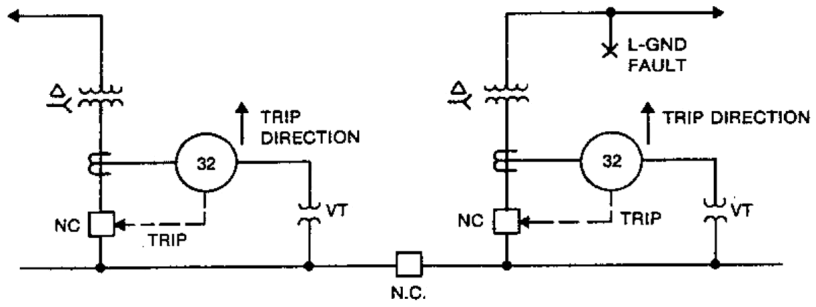

Figure 4-9—Application of directional power relay used to detect line-to-ground faults (Example 2)

Maximum torque on the relay element occurs when the relay current is at a designated angle relative to relay voltage; the maximum torque angle depends on the relay design. The relay is connected to the VTs and CTs so the maximum relay torque occurs at unity power factor of the load in the designated tripping direction. Figure 4-10 shows the proper connection for a directional-power relay having a maximum torque angle of 90°.

4.4.4.2.2 Static design

Static directional-power relays are also designed in single- and three-phase versions. Although a static relay does not develop rotational torque, the operating characteristics typically replicate that of the electromechanical design with the function of maximum relay

Copyright © 2001 IEEE. All rights reserved.

Copyright The Institute of Electrical and Electronics Engineers, Inc.
Provided by IHS under license with IEEE
No reproduction or networking permitted without license from IHS
Not for Resale

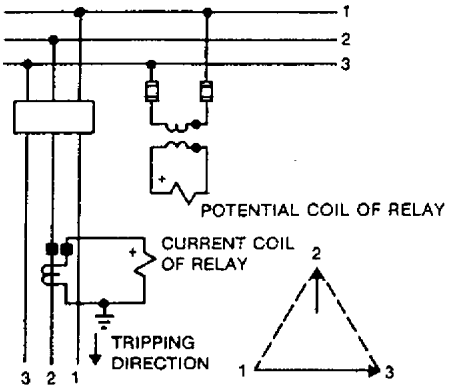

NOTE—*I* leads *E* by 90°.

Figure 4-10—Directional power relay connection diagram

torque occurring at unity power factor of the load in the designated tripping direction. Some designs have the capability of adjusting for different angles of maximum torque.

4.4.5 Loss-of-excitation relay (Device 40)

4.4.5.1 Application

The loss-of-excitation relay is used to protect a synchronous motor or generator against damage due to loss of excitation. Loss of excitation or severely reduced excitation can cause generator heating, large voltage drops, and unstable operation. In severe cases, loss of synchronism can occur. Common protection used for smaller motors consist of two types:

— An instantaneous dc undercurrent relay that monitors field current
— A relay that monitors the relative angle between voltage and current and thereby responds to power factor

On large synchronous motors (normally above 2200 kW) and most generators, an impedance-measuring or var-measuring relay operating from current and voltage at the machine stator terminals is used. The distance unit has either an impedance or mho characteristic. When excitation to the generator is lost, the apparent impedance seen by the relay traces a path into the relay's tripping zone. See Figure 4-4a for the type of mho unit characteristic used for protection of a generator. Additional discussion is given in Chapter 12.

The var relay provides an operating characteristic that is plotted in the complex power plane as shown in Figure 4-11. The characteristic is represented by a line that is shifted 8° from the horizontal axis. When converted to the impedance plane, this characteristic provides a mho characteristic that has its diameter shifted 8° from the *X* axis as shown in Figure 4-12. The relay is set in per-unit rated vars of the generator so that the characteristic falls above the steady state stability limit.

Copyright © 2001 IEEE. All rights reserved.

Copyright The Institute of Electrical and Electronics Engineers, Inc.
Provided by IHS under license with IEEE
No reproduction or networking permitted without license from IHS
Not for Resale

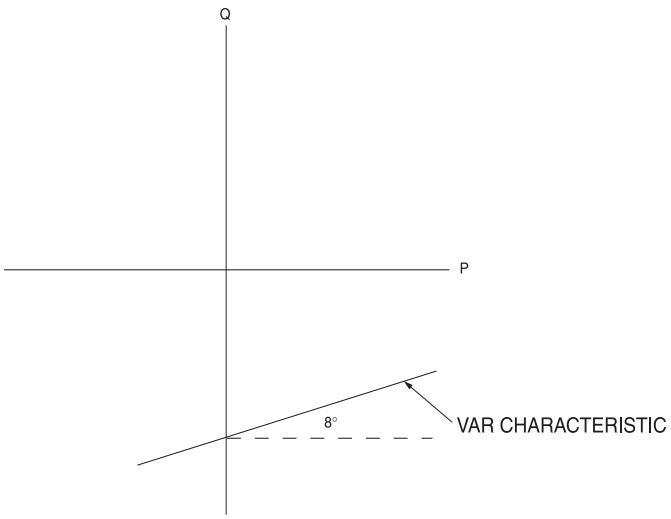

Figure 4-11—Var relay operating characteristic in the complex power plane

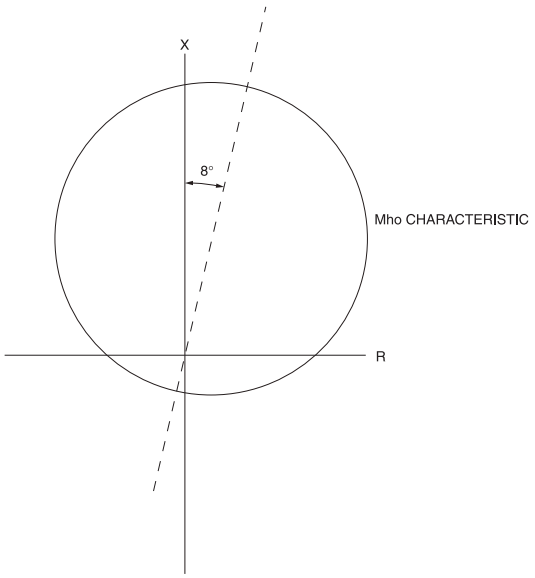

Figure 4-12—Var relay operating characteristic converted to the impedance plane

4.4.5.2 Construction

The undercurrent relay is a dc polarized relay or a highly sensitive D'Arsonval contact-making dc millivoltmeter. The power factor relay is static. The impedance-measuring

Copyright © 2001 IEEE. All rights reserved.

--`,,-`-`,,`,,`,`,,`---

Copyright The Institute of Electrical and Electronics Engineers, Inc.
Provided by IHS under license with IEEE
No reproduction or networking permitted without license from IHS Not for Resale

relay is an induction cylinder unit having directional characteristics. The var relay is also of static design.

4.4.6 Phase balance current relay (Device 46)

4.4.6.1 Application

Phase balance relays provide motor or generator protection against unbalanced phase currents. Unbalanced currents are caused by

- An open fuse or conductor in a motor branch circuit or in the primary of a delta-wye-connected transformer serving a group of motors,
- Unbalanced load conditions, or
- Single-phase switching in the distribution and transmission systems.

Two types of phase balance relays are normally applied: current balance and negative-sequence overcurrent. The current balance relay operates when the difference in the magnitude of root-mean-square (rms) currents in two phases exceeds a given percentage value. The negative-sequence current relay operates on magnitude of negative-sequence current, but is set in terms of I_2^2t, the thermal energy produced by this current. In order to set the negative-sequence relay, the I_2^2t characteristic (or K factor) of the machine should be specified.

4.4.6.2 Operation principles for a current balance relay

4.4.6.2.1 Electromechanical design

The electromechanical relay consists of two or three induction disk elements, each having two current coils, as shown in View (a) and View (b) of Figure 4-13. These coils are connected to different phases so that a closing torque is produced on the disk that is proportional to the difference or unbalance between the currents in the two phases. The amount of unbalance current required to close the contacts may be a fixed percentage, typically 25%, or it may be a variable percentage, as shown by the operating characteristic in Figure 4-14.

4.4.6.2.2 Static design

The static relay is designed as an individual unit for motor or generator protection or may be a part of an ac motor protective device that has several protective functions within the same unit. The relay determines the difference between line currents and trips when the difference exceeds a preset percentage of full-load current or when the difference exceeds a preset ampere value (depending on the relay manufacturer). Tripping time is either inversely proportional to the phase unbalance current or definite time.

Copyright © 2001 IEEE. All rights reserved.

Copyright The Institute of Electrical and Electronics Engineers, Inc.
Provided by IHS under license with IEEE
No reproduction or networking permitted without license from IHS
Not for Resale

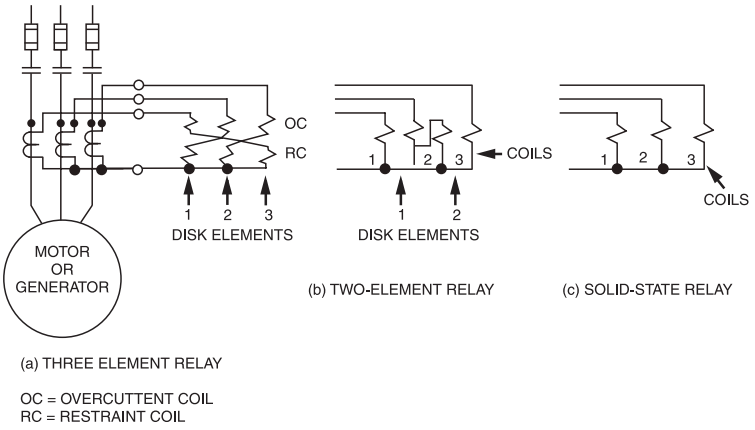

Figure 4-13—Current balance relay connection diagrams

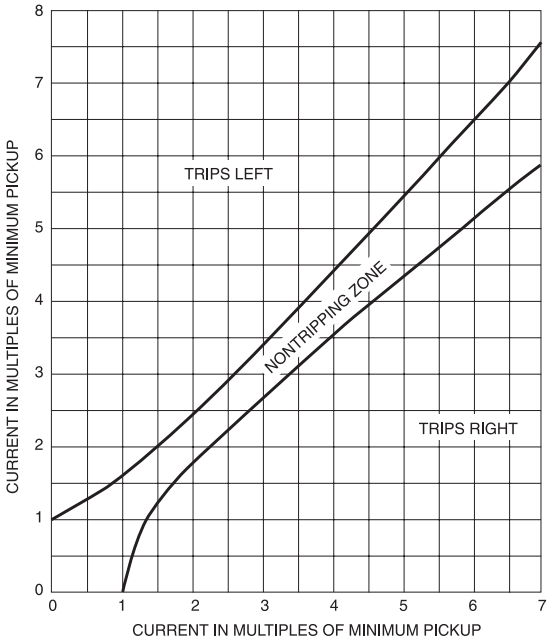

Figure 4-14—Typical current balance relay operating characteristic

4.4.6.3 Operation principles of a negative-sequence relay

4.4.6.3.1 Electromechanical design

The electromechanical relay consists of an induction disk overcurrent relay and a negative-sequence filter so that the relay responds only to negative-sequence currents. The relay characteristics are extremely inverse, which provide essentially a constant $I_2^2 t$ line. The typical operating characteristic is shown in Figure 4-15.

Copyright © 2001 IEEE. All rights reserved.

Copyright The Institute of Electrical and Electronics Engineers, Inc.
Provided by IHS under license with IEEE
No reproduction or networking permitted without license from IHS
Not for Resale

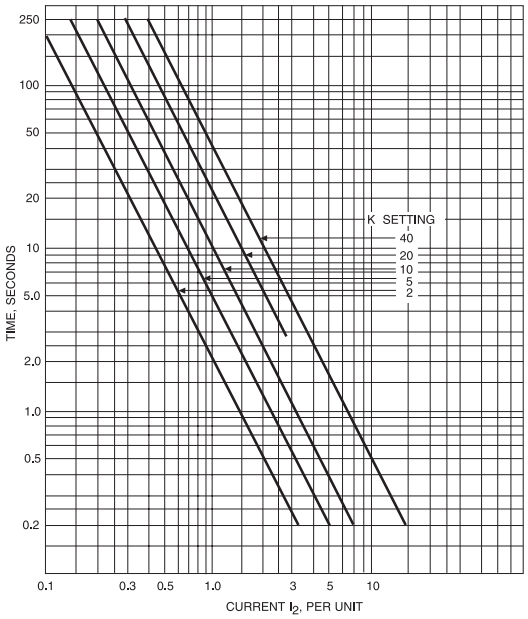

Figure 4-15—Typical n-s overcurrent relay operating characteristic

4.4.6.3.2 Static design

The static relay performs similarly to the electromechanical design. A typical connection diagram is shown in View (c) of Figure 4-13. This relay typically provides two set points, which allows an alarm signal at a sensitive, pretrip value of I_2^2t in addition to the trip setting. Figure 4-15 shows typical characteristics of this relay.

4.4.7 Phase-sequence voltage relay (Device 47)

4.4.7.1 Application

The phase-sequence relays are used to protect ac machines from undervoltage and to prevent starting on open or reverse phase sequence. Phase-sequence relays may also provide overvoltage protection. Some phase-sequence relays do not give single-phase protection once the motor is running because the dynamic action of the motor supports the open phase voltage at or near its rated value. Often, a phase-sequence relay monitors the bus voltage and thus protects a group of motors.

4.4.7.2 Operation principles

The electromechanical version is an induction disk polyphase voltage relay. All units normally have an undervoltage pickup tap setting; some units are also available with time-dial and overvoltage tap settings. Operating time is inversely related to applied voltage.

Copyright © 2001 IEEE. All rights reserved.

Copyright The Institute of Electrical and Electronics Engineers, Inc.
Provided by IHS under license with IEEE
No reproduction or networking permitted without license from IHS
Not for Resale

4.4.8 Machine or transformer thermal relay (Device 49)

4.4.8.1 Application

Thermal relays are used to protect motors, generators, and transformers from damage due to excessive long-term overloads.

4.4.8.2 Operation principles

Three types of thermal relays are available:

— Replica temperature relays, operating from CTs
— Bridge relays, operating from resistance temperature detectors (RTDs) located in the protected equipment
— A combination relay, operating from a current signal biased by an RTD signal

Replica temperature relays usually consist of a coiled thermostatic metal spring mounted on a shaft and a heater element that monitors the output of a CT in a power circuit. The characteristics of the heater element and metal spring approximate the heating curve of the machine or transformer. These relays may or may not be ambient compensated. This type of thermal relay is normally applied to small (less than 1100 kW) motors where motor RTDs are not generally included in the protected motor. However, if the motor is important, a more complex protection scheme, discussed in Chapter 10, should be used.

Bridge temperature relays operate on the Wheatstone bridge principle using an RTD as a sensor to precisely measure the temperature in a certain part of a motor or generator stator. This relay may be applied to larger, more important motors, generators, and transformers where monitoring the actual temperature in the windings is desirable. Static thermal relays, some using microprocessor technology, also generate the motor heating curves. In some cases, the heating curves are modified by inputs from winding RTDs; this provides precise protection for motors and combines the best features of both relay types. The relay is available either as an individual module or combined with other functions to provide complete motor protection in a multifunction module. See Chapter 10 on motor protection for more details.

4.4.9 Time-overcurrent and instantaneous overcurrent relays (Device 50, Device 51, Device 50/51, and Device 51V)

4.4.9.1 Application

By far, the most commonly used protective relays are the time-overcurrent and instantaneous overcurrent relays. They are used as both primary and backup protective devices and are applied in every protective zone in the system. Specific application information can be found in Chapter 8 through Chapter 15, which describe the protection of major system components.

The time-overcurrent relay is selected to give a desired time-delay tripping characteristic versus applied current, whereas instantaneous overcurrent relays are selected to provide high-speed tripping. The instantaneous unit may be applied by itself or included in the same

Copyright © 2001 IEEE. All rights reserved.

Copyright The Institute of Electrical and Electronics Engineers, Inc.
Provided by IHS under license with IEEE
No reproduction or networking permitted without license from IHS Not for Resale

enclosure as the time-overcurrent relay. For electromechanical relays, this is referred to as an instantaneous trip attachment.

4.4.9.2 Time-delay overcurrent relay

The most commonly used time-delay relays for system protection use the induction disk principle. Using the same principle as ac watthour meters, when applied to relay design, it provides many varieties of time-current characteristics.

4.4.9.2.1 Electromechanical design

The principal component parts of an electromechanical induction disk overcurrent relay are shown in Figure 4-16.

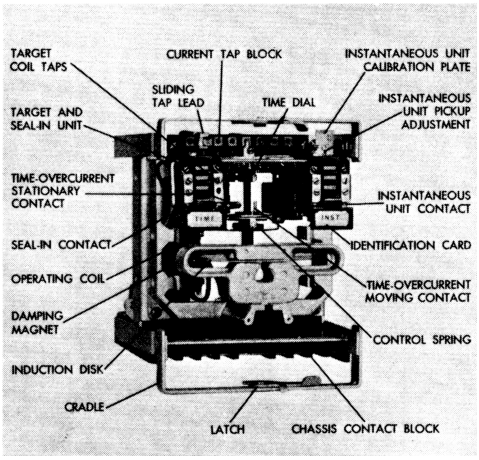

Figure 4-16—Induction disk overcurrent relay with instantaneous attachment (relay removed from drawout case)

The elements of an induction disk relay are shown in Figure 4-17. The disk is mounted on a rotating shaft, restrained by a spring. The moving contact is fastened to the shaft. The operating torque on the disk is produced by an electromagnet having a main (or operating current) coil and a lag coil, which produce the out-of-phase magnetic flux. A damping magnet provides restraint after the disk starts to move and contributes to the desired time characteristic. Two adjustments exist: the pickup current tap and the time dial. The pickup current is determined by a series of discrete taps that are furnished in several current ranges. The time-dial setting determines the initial position of the moving contact when the coil current is less than the tap setting. Its setting controls the time necessary for the relay to close its contact. A relay constructed on these principles has an inverse time characteristic. As a result, the relay operates slowly on small values of current above the tap setting. As the current increases, the time of operation decreases. When the primary current is above the knee of the CT saturation curve, the secondary current becomes less proportional to the primary current. The effect is further complicated when the relay magnetic circuit also saturates; thus, the time delay remains constant as a result. Different time-current curves can be obtained by modifications of electromagnetic design; some of these typical curves are shown in Figure 4-18.

Copyright © 2001 IEEE. All rights reserved.

Copyright The Institute of Electrical and Electronics Engineers, Inc.
Provided by IHS under license with IEEE
No reproduction or networking permitted without license from IHS
Not for Resale

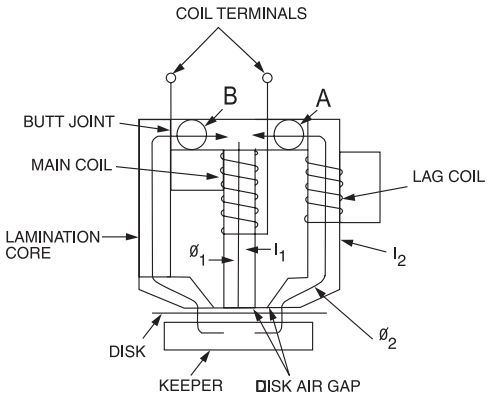

Figure 4-17—Elementary induction disk relay

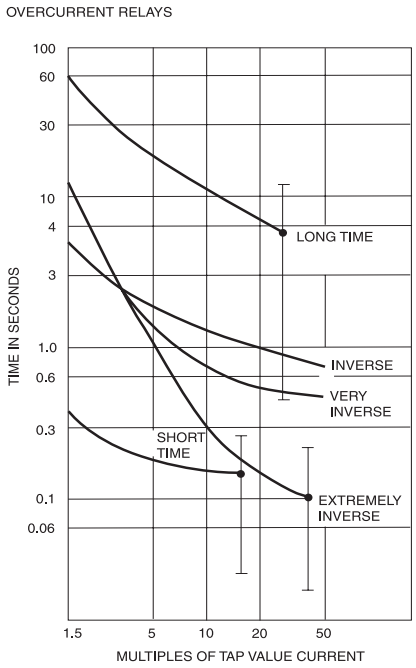

Figure 4-18—Comparison of typical curve shapes for overcurrent relays

An auxiliary seal-in relay is incorporated into the relay case to lighten the current-carrying duty of the moving contact. It also operates the target indicator.

An inherent characteristic with induction disk relay design is that of disk overtravel. As the disk rotates, it develops an inertia. As such, when the fault current is removed, the disk

Copyright © 2001 IEEE. All rights reserved.

Copyright The Institute of Electrical and Electronics Engineers, Inc.
Provided by IHS under license with IEEE
No reproduction or networking permitted without license from IHS
Not for Resale

continues to rotate for some distance. Referred to as overtravel, the continued travel distance is dependent on the torque and inertia developed during operation. Depending on the distance the disk has traveled and the magnitude of the disk inertia when the fault current is removed, it is possible the inertia will cause sufficient rotation to result in the contact closure. Thus, an unnecessary trip operation is produced. Typically, an additional 0.1 s is added to the time separation between the electromechanical relay time-current curve and the adjacent upstream device time-current curve. The purpose of this additional separation is to avoid unnecessary tripping of the upstream device after the primary device has cleared the fault.

4.4.9.2.2 Static design

Time-current characteristic curves for static relays are obtained through the use of analog or digital circuits. Time-current characteristic curves and tap ranges are similar to the curves and ranges provided in induction disk relays. Static overcurrent relays have the same application as induction disk relays and are particularly useful where severe vibration specifications or seismic shock is imposed. In addition, static overcurrent relays can provide faster reset times and have no significant overtravel.

4.4.9.3 Instantaneous overcurrent relay

Instantaneous overcurrent relays are designed to operate without any intentional time delay. Typical operating times are in the range of 0.5 cycle to 2 cycles. In the electromechanical design, the reset of the unit integrates over a specific time and is dependent upon dynamics within the design of the relay. Static designs typically provide instantaneous reset capabilities. Newer static designs provide the user with a selection of either instantaneous or integrating reset. This design gives the user the flexibility to utilize this relay in various applications.

4.4.9.3.1 Electromechanical design

Two types of electromechanical instantaneous relays exist and use the principle of electromagnetic attraction: solenoid (or plunger) and clapper (or hinged-armature) (see Figure 4-19 and Figure 4-20, respectively). The basic elements of the solenoid relay are a solenoid and a movable plunger of soft iron. The pickup current is determined by the position of the plunger in the solenoid. A calibration screw may be provided to adjust the position of the plunger. These relays are of single-phase design with up to three relays mounted in a common enclosure.

In a clapper relay, a hinged armature that is held open by a restraining spring is attracted to the pole face of an electromagnet. The magnetic pull of the electromagnet is proportional to the coil current. The pickup current is the coil current required to overcome the tension of the spring, and it may be calibrated over a specified range. In some applications, the pickup current can be varied by adjusting the position of a slug in the pole. The clapper relay is normally the one found in an induction relay case when a “50/51” (i.e., time-overcurrent with instantaneous) function is specified. For some electromechanical relays, separate Device 50 relays may be required when low pickup settings (e.g., 0.5 A) are desired because these low pickup settings may not be available in a combination Device 50/51 relay.

Copyright © 2001 IEEE. All rights reserved.

Copyright The Institute of Electrical and Electronics Engineers, Inc.
Provided by IHS under license with IEEE
No reproduction or networking permitted without license from IHS
Not for Resale

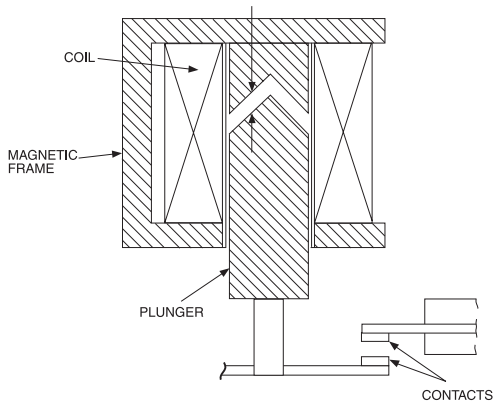

Figure 4-19—Solenoid (or plunger) instantaneous relay

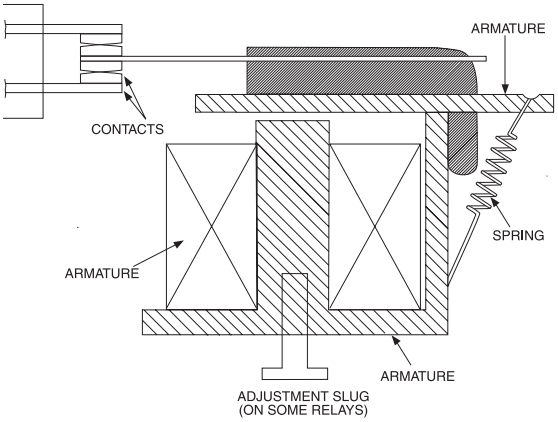

Figure 4-20—Clapper (or hinged-armature) instantaneous relay

4.4.9.3.2 Static design

In static designs, instantaneous overcurrent functions are normally combined with the time-overcurrent units and provided with all three phases in one enclosure. This configuration provides space savings and is generally more cost efficient. Individual instantaneous units are available where applications do not warrant the additional functions of time-overcurrent.

4.4.9.4 Overcurrent relay types and their characteristic curves

Time-overcurrent relays are available with many different current ranges and tap settings. The range of tap settings that are typically available are shown in Table 4-3.

The relays can be specified to have either single or double circuit closing contacts.

Copyright © 2001 IEEE. All rights reserved.

Copyright The Institute of Electrical and Electronics Engineers, Inc.
Provided by IHS under license with IEEE
No reproduction or networking permitted without license from IHS
Not for Resale

Table 4-3—Typical tap ranges and settings of time-overcurrent relays

Tap range	Tap settings
0.5-2.5 (or 0.5-2)	0.5, 0.6, 0.8, 1.0, 1.2, 1.5, 2.0, 2.5
0.5-4	0.5, 0.6, 0.7, 0.8, 1.0, 1.2,
	1.5, 2.0, 2.5, 3.0, 4.0
1.5-6 (or 2-6)	1.5, 2, 2.5, 3, 3.5, 4, 5, 6
4-16 (or 4-12)	4, 5, 6, 7, 8, 10, 12, 16
1-12	1.0, 1.2, 1.5, 2.0, 2.5, 3.0,
	3.5, 4, 5, 6, 7, 8, 10, 12

Figure 4-18 compares the basic shapes of five typical relay curves at the No. 5 time dial. Manufacturer's published time-current curves show the relay operating times for a full range of time-dial settings and multiples of tap current applied to the relay.

4.4.9.5 Special types of overcurrent relays

By adding different elements to the basic overcurrent relay, special types of overcurrent relays are derived, in particular, the voltage-dependent overcurrent relay.

Voltage-dependent overcurrent relays are used in generator circuits for backup during external faults. When an external fault occurs, the system voltage collapses to a relatively low value; but when an overload occurs, the voltage drop is relatively small. These relays utilize the voltage to modify the time-current characteristics so that the relay rides out permissible power swings, but gives fast response when tripping due to faults. This overcurrent relay has two variations: voltage-controlled and voltage-restrained. Electromechanical and static relays use the same principles in the design of voltage-dependent overcurrent relays. The main difference is in the methods used to accomplish this task.

4.4.9.5.1 Electromechanical design

In the voltage-controlled overcurrent relay, an auxiliary undervoltage element controls the operation of the induction disk element. When the applied voltage drops below a predetermined level, an undervoltage contact is closed in a shaded pole circuit, permitting the relay to develop torque and operate as a conventional overcurrent relay. Thus, the undervoltage unit supervises the operating coil and permits it to operate only when the voltage is below a preset value.

The voltage-restrained relay has a voltage element that provides restraining torque proportional to voltage and thus actually shifts the relay pickup current. Hence, the relay becomes more sensitive the larger the voltage drop (during faults), but is relatively insensitive at nominal voltage. The relay is set so it rides through permissible power swings at nominal voltage.

Copyright © 2001 IEEE. All rights reserved.

--`,,`-`-`,,`,,`,`,,`---
Copyright The Institute of Electrical and Electronics Engineers, Inc.
Provided by IHS under license with IEEE
No reproduction or networking permitted without license from IHS
Not for Resale

See Chapter 12 for additional discussion on the application of this relay for generator protection.

4.4.9.5.2 Static design

The characteristics of the static voltage-dependent relays are similar to the characteristics described in 4.4.9.5.1 for electromechanical devices. These functions are accomplished through either analog or digital circuits. Voltage-controlled relays inhibit the overcurrent function from producing an output based on the voltage magnitude. If the voltage drops below the setpoint of the relay, the overcurrent function operates as normal. If the current increases above the setpoint without a decrease in voltage below its setpoint, the relay does not operate. This voltage supervision prevents nuisance tripping for any power swings that may cause the current to rise momentarily above the relay's overcurrent setpoint.

The voltage-restrained relay similarly reduces the overcurrent pickup setting proportional to the voltage drop. If the voltage drops to 50% of nominal, the overcurrent pickup point also decreases to 50% of its original value.

4.4.10 Overvoltage relay (Device 59)

4.4.10.1 Application

Overvoltage relays are typically used to monitor voltage levels on buses or generators to initiate switching or tripping operations. Other applications for this relay are as follows:

a) *Simple overvoltage bus protection*. The relay may either alarm or trip voltage-sensitive loads or circuits in order to protect them against sustained overvoltage conditions.

b) *Ground-fault detection*. Two methods are currently used to detect ground faults:

   1) One method measures the zero-sequence voltage across the corner of a broken delta secondary of three VTs that are connected grounded wye-broken delta. A low-pickup relay is used because normally no voltage exists across the relay. During a ground fault on a high-resistance grounded-neutral or ungrounded system, the applied voltage causes the relay to operate in a predetermined period. A resistor may be required across the relay to prevent damage to the VT due to ferroresonance.

   2) The second method measures the actual voltage across a high ohmic value resistance that is connected between the system neutral and ground. The voltage appearing across the relay (and the resistor) during a ground fault may be several times the pickup voltage so that the relay can be set to operate in a specific time. The maximum continuous operating voltage limit of the relay should not be exceeded. In medium-voltage systems, a stepdown transformer is used with windings rated 120 V or 240 V. Using a 240 V secondary of a 4160 V/240 V transformer produces a maximum of 139 V on the secondary during a ground fault. Often, a 150 V meter is used with this relay.

 Copyright © 2001 IEEE. All rights reserved.

Copyright The Institute of Electrical and Electronics Engineers, Inc.
Provided by IHS under license with IEEE
No reproduction or networking permitted without license from IHS Not for Resale

4.4.10.2 Operation principles

An overvoltage relay is designed to operate on voltage magnitude. When the voltage rises above the pickup setting of the relay, output contacts close to provide a trip signal. Overvoltage relays may be either electromechanical or static.

The pickup (or tap) voltage is adjustable by discrete taps over a specified range. Various tap ranges are available depending on the relay design. In addition, some static relays provide continuous adjustment of the voltage pickup across the specified tap range.

4.4.10.2.1 Electromechanical design

Time-overvoltage relays of the electromechanical design generally use the induction disk principle. When the applied voltage is above the pickup voltage, the normally open contacts begin to close at a rate dependent on the percentage of voltage above the pickup value. This action results in a typical inverse operating characteristic. Frequency-compensated models are available that maintain constant operating characteristics over a specified range of frequency variation.

The low-pickup relays used in ground-fault applications have filters in the coil circuits tuned to filter out third harmonic voltages when applied to generator neutrals. This makes them less sensitive to third harmonic voltages that may be present under normal conditions.

Instantaneous overvoltage relays are typically plunger relays where the armature is adjustable on the plunger rod to vary the pickup over the adjustment range. The operating time is approximately 1 cycle for voltage greater than 1.5 times the pickup setting. This type of relay may be used either as an overvoltage or an undervoltage relay simply by calibrating the relay at the desired pickup or dropout voltage, although operation in the undervoltage mode is not normally recommended. Many of these relays have a dropout-to-pickup ratio of 90% to 98%. Care should be taken in applying these plunger relays because of the possibility of contact chatter when the pickup setting is near the normal voltage. Relays experience increased wear under those conditions.

4.4.10.2.2 Static design

Time-overvoltage relays of the static design provide similar inverse operating characteristics to the electromechanical design. These relays are frequency compensated and are capable of withstanding high levels of seismic stress without malfunction. The capability to filter third harmonic current is also available in the static design relays.

4.4.11 Voltage balance relay (Device 60)

A voltage balance relay may be used to block relays or other devices that operate incorrectly when a VT fuse blows. Two sets of VTs are required that are normally connected to the same primary source during the time when blown fuse protection is required. The relay is connected as shown in Figure 4-21. Normally, open contacts are used to ring an alarm, and normally closed contacts are used to open trip circuits of relays subject to misoperation, such

Copyright © 2001 IEEE. All rights reserved.

--`,,`-`-`,,`,,`,`,,`---

Copyright The Institute of Electrical and Electronics Engineers, Inc.
Provided by IHS under license with IEEE
No reproduction or networking permitted without license from IHS
Not for Resale

as voltage-restrained relays, synchronizing relays, impedance relays, negative-sequence relays, and in general any relay that operates from both current and voltage inputs. Typical examples include to prevent incorrect operation of the loss-of-excitation relay (Device 40) or the backup overcurrent relay (Device 51V) in a generator circuit because of loss of voltage on a VT. Another application may be to inhibit the operation of a voltage regulator on a generator. The operating time is adjusted at the factory (e.g., 200 ms is typical), and it is sufficiently fast to disable these relays before they have a chance to trip the circuit breaker.

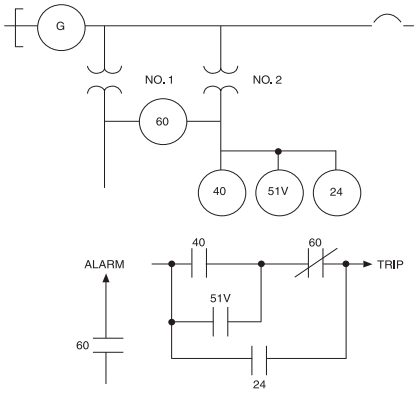

Figure 4-21—Typical application of voltage balance relay

A voltage balance relay may also be used to detect a small voltage unbalance in a three-phase system. The principal application of this relay is to protect three-phase motors from the damage that may be caused by single-phase operation. The relay can detect single-phase conditions for light loads as well as heavy loads by detecting the negative-sequence component of voltage. Typically, an external timer relay is also required.

4.4.12 Directional overcurrent relay (Device 67)

4.4.12.1 Application

Directional overcurrent relays are used to provide sensitive tripping for fault currents in one (tripping) direction and not trip for load or fault currents in the reverse (normal) direction. Typical applications of this relay include

a) Protection of a network of distribution lines (not radial feeders) where tripping in a given direction to provide selective operation is required. In View (a) of Figure 4-22, the tripping direction is for faults within the line section that are above the pickup setting of the relay. For faults on other lines from the bus at Substation A, the operating current in the relay at Substation A reverses, and the relay does not operate. Both phase and ground relays are normally used.
b) Detection of uncleared faults on the utility line where fault current can be back-fed through the industrial system from in-plant generation or a second utility line, as illustrated in View (b) of Figure 4-22. The fault current magnitude fed from in-plant

Copyright © 2001 IEEE. All rights reserved.

--`,,`,,`,,`,,`,,`,,`---

Copyright The Institute of Electrical and Electronics Engineers, Inc.
Provided by IHS under license with IEEE
No reproduction or networking permitted without license from IHS
Not for Resale

generators and motors to the utility line normally is smaller than when it is fed from the utility line to the plant; therefore, a sensitive relay setting is required to respond to faults on the utility system.

c) Sensitive high-speed ground-fault protection of transformers and generators, as shown in View (c) and View (d) of Figure 4-22. The directional control gives the relay the characteristics of the differential protective scheme described in 4.4.15 and makes it particularly useful. Product directional relays may be used for this application.

d) Applications required by Article 450 of the National Electrical Code® (NEC®) (NFPA 70-1999) [B66][2], where transformers are applied in parallel with a closed secondary bus tie circuit breaker.

e) Other applications where the desired objectives can be achieved by distinguishing between the direction of current flow.

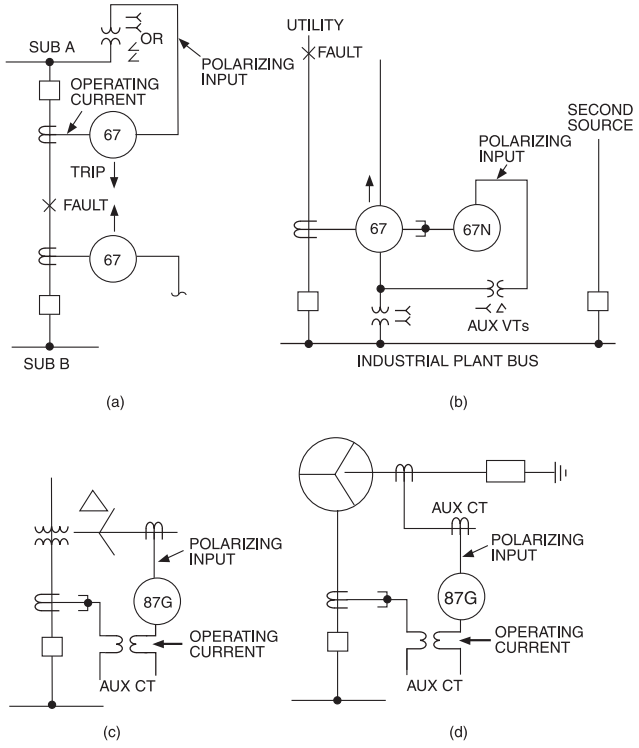

(a) Line protection using directional phase relays
(b) Protection of industrial plant bus from uncleared utility line faults
(c) Directional ground-fault protection of transformer using product relays
(d) Directional ground-fault protection of generator using product relays

Figure 4-22—Typical applications for directional current relays

[2]The numbers in brackets correspond to the numbers of the bibliography in 4.6.

Copyright © 2001 IEEE. All rights reserved.

Copyright The Institute of Electrical and Electronics Engineers, Inc.
Provided by IHS under license with IEEE
No reproduction or networking permitted without license from IHS
Not for Resale

In all applications, a reference or polarizing input is required to provide the directional control. The polarizing input may be a current or voltage, or both. Current polarizing input is obtained from a CT in the neutral-grounding conductor of a generator or transformer, as shown in View (c) and View (d) of Figure 4-22. An auxiliary CT may be required to match the CT ratio of the operating current when the relay is connected for differential protection. The auxiliary CT is used to provide sufficient operating current during faults within the protection zone and sufficient restraint for faults outside the protection zone. Potential polarizing input for phase relays is obtained from VTs, either two units connected line to line in open delta or three units connected line to ground in wye-wye, as shown in View (a) of Figure 4-22. The zero-sequence potential required for polarizing ground relays is obtained using three VTs connected wye-delta, with the potential coil connected in series with the secondary windings. This configuration is referred to as the broken delta or corner-of-the-delta connection. Three auxiliary VTs may be used, connected as shown in View (b) of Figure 4-22, or fully rated VTs may be used.

4.4.12.2 Operation principles

Directional overcurrent relays consist of an overcurrent function and a directional function. Operation of the overcurrent function is controlled by the directional function, which determines its direction of operation from a polarizing input. The polarizing input can be current or voltage, or both. The directional overcurrent relay shown in Figure 4-23 comprises an electromechanical induction disk element and an instantaneous directional power element. When the current is flowing in the tripping direction, the directional function enables the overcurrent function to operate when the current exceeds its tap setting. If the fault current is flowing in the reverse direction, the directional function inhibits the overcurrent function and prevents operation.

4.4.12.2.1 Electromechanical design

The electromagnetic relay consists of a conventional induction disk time-overcurrent element and an instantaneous power directional element arranged as shown in Figure 4-23. The various time-delay characteristics may be selected as described in 4.4.9.4.

The directional element has an operating current coil and a polarizing coil. The latter is energized by either voltage or current in order to determine the direction of current flow. Some units are dual polarized, having both a voltage and current coil. Maximum positive torque is produced (in tripping direction) when the angle between the operating coil current and the polarizing coil quantity is equal to the maximum torque angles of the relay. This characteristic of the directional element is shown in Figure 4-24.

For example, maximum torque may be produced when the operating current leads the voltage by 45°. In a current-polarized relay, maximum torque may occur when the two currents are in-phase (i.e., zero-phase angle). The angles of maximum torque vary; therefore, manufacturers' data should be obtained. The relay is then connected to the CT and VT circuits so that during the fault conditions being protected, the relay produces maximum torque for tripping.

 Copyright © 2001 IEEE. All rights reserved.

--`,,`-`-`,,`,,`,`,,`---

Copyright The Institute of Electrical and Electronics Engineers, Inc.
Provided by IHS under license with IEEE
No reproduction or networking permitted without license from IHS Not for Resale

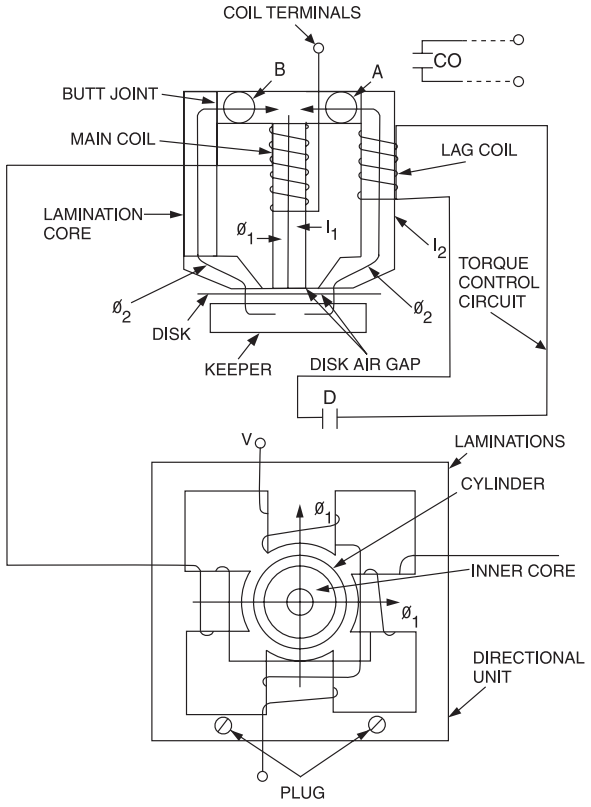

Figure 4-23—Directionally controlled overcurrent relay

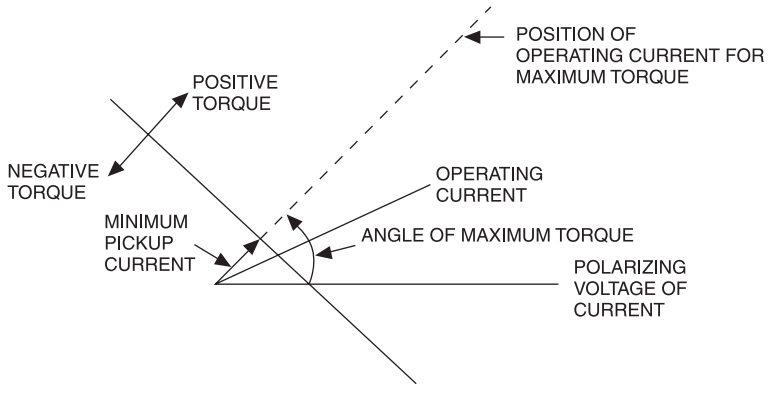

Figure 4-24—Characteristics of a directional element

Copyright © 2001 IEEE. All rights reserved.

Copyright The Institute of Electrical and Electronics Engineers, Inc.
Provided by IHS under license with IEEE
No reproduction or networking permitted without license from IHS
Not for Resale

A directional instantaneous overcurrent element is optionally available for mounting within the enclosure. Its operation is supervised by the same directional element used for the time-overcurrent element.

4.4.12.2.2 Static design

The static relay functions similarly to its electromechanical counterpart using analog or digital circuit designs similar to the design shown in Figure 4-25. The relay has a current input for the overcurrent and current-polarizing circuit and a voltage input for the voltage-polarizing circuit. The input quantities are generally supplied to a comparator or microprocessor, which determines whether the measured values are above the pickup settings and in the tripping direction. If both conditions are satisfied for the preset time delay, then a signal is sent to the output to provide contact closure.

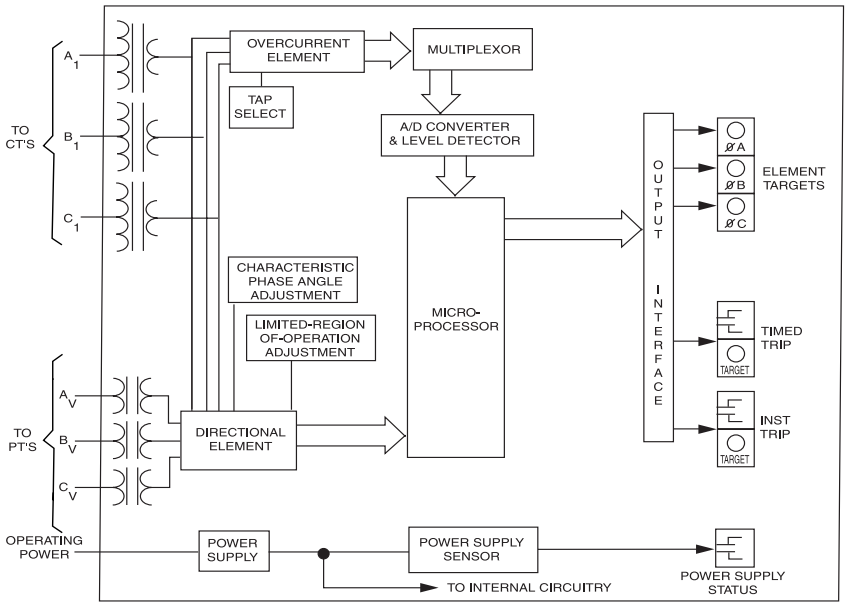

Figure 4-25—Block diagram of a static directional overcurrent relay

The directional operating characteristic for the static relay is also adjustable over a range to allow matching to the line and system conditions. Because no torque is developed to turn a disk, the characteristic setting is referred to as the angle of sensitivity. Similarly, maximum sensitivity is produced (in tripping direction) when the angle between the current and the polarizing quantity is equal to the maximum angle setting of the relay.

The directional characteristic of a static relay is also depicted by a line (180° angle) through the origin of an *R-X* diagram that is perpendicular to the angle of maximum sensitivity. Some static relays have the capability to reduce the angle of the characteristic line (or region of operation) to something less than 180°, as shown in Figure 4-26. This capability helps prevent false tripping for certain power system conditions, such as mutual coupling on adjacent lines.

Copyright © 2001 IEEE. All rights reserved.

Copyright The Institute of Electrical and Electronics Engineers, Inc.
Provided by IHS under license with IEEE
No reproduction or networking permitted without license from IHS
Not for Resale

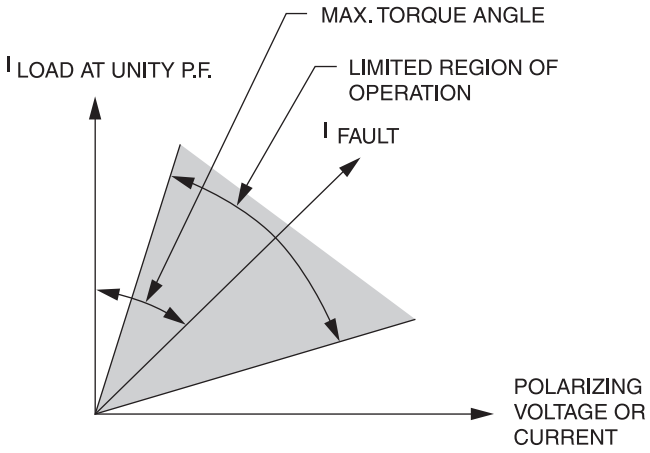

Figure 4-26—Region of operation characteristic for a static direction overcurrent relay

Static relays also typically have an option available for an instantaneous overcurrent function controlled by the directional function.

The time-delay characteristics are similar to the electromechanical as described in 4.4.9.4

4.4.12.3 Instantaneous directional overcurrent relay

An electromagnetic relay has an instantaneous induction cup element that is controlled by an instantaneous power directional element, as described in 4.4.12.2. The operating current is adjustable over a selected range, and the directional characteristics should be identified and applied in the same manner as described in 4.4.12.2.

4.4.12.4 Product directional ground relay

The product directional ground relay operates on the product of the current in the operating coil and the voltage or current in the polarizing coil. It provides sensitive protection in the desired direction of current flow. The operating element of an electromagnetic relay may be either an induction disk element having an adjustable time delay for selectivity or an induction cup element for high-speed operation. The directional characteristics of the relay should be determined in order to assure correct application. The application of product relays in directional applications on a network system is generally complex; this kind of relay is normally reserved for use in ground-fault protection of wye-connected generator and transformer windings.

Copyright © 2001 IEEE. All rights reserved.

--`,,`-`-`,,`,,`,`,,`---

Copyright The Institute of Electrical and Electronics Engineers, Inc.
Provided by IHS under license with IEEE
No reproduction or networking permitted without license from IHS
Not for Resale

4.4.13 Frequency relays (Device 81)

4.4.13.1 Application

A frequency relay is a device that operates at a predetermined value of frequency: either under or over normal system frequency or rate of change of frequency. When it is used to operate on a predetermined value below nominal frequency, it is generally called an underfrequency relay. When it operates on a predetermined value above nominal, it is called an overfrequency relay. Both functions are often included in the same case, but are utilized for different purposes.

Underfrequency relays should be applied when the loads are supplied either by local generators exclusively or by a combination of local generation and utility tie (see Figure 4-27a, Figure 4-27b, and Figure 4-27c). When a major generator drops off line unexpectedly in a system supplied only by local generation (see Figure 4-27a), the underfrequency relays automatically open plant load circuit breakers so the load matches, or is less than, the remaining generation. Otherwise, moderate to severe overloads on the remaining generators could plunge the plant into a blackout before the operator can react. This application also applies when the utility disconnects a plant system that has local generation (see Figure 4-27b). When the utility does not disconnect the plant during an underfrequency condition, the plant's generators begin to supply the utility system loads, causing overloading of the local generators. To prevent this event from happening, an underfrequency relay may be used to supervise an extremely sensitive directional power relay (see Figure 4-27c). The underfrequency and reverse-power relay trip contacts are connected in series in the trip circuit of the incoming circuit breaker so that both relays would have to operate together in order to trip the incoming circuit breaker.

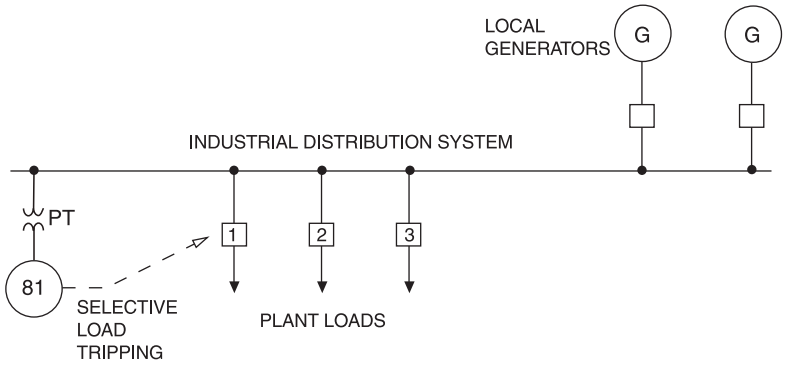

Figure 4-27a—Load-shedding scheme for system with only local generation

Copyright © 2001 IEEE. All rights reserved.

Copyright The Institute of Electrical and Electronics Engineers, Inc.
Provided by IHS under license with IEEE
No reproduction or networking permitted without license from IHS
Not for Resale

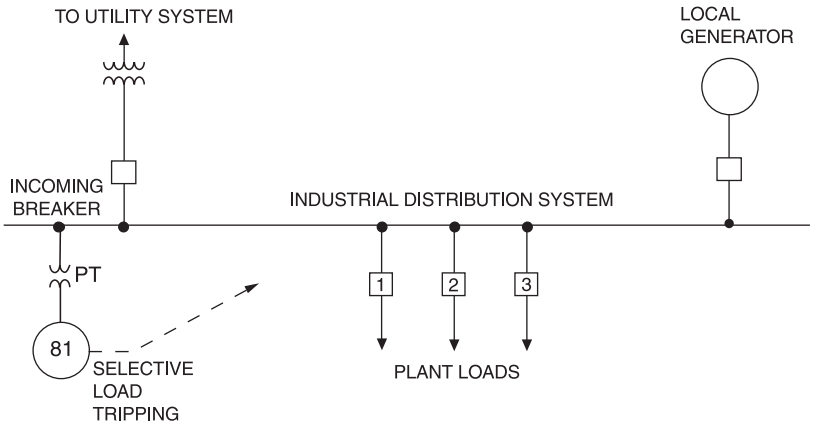

Figure 4-27b—Load-shedding scheme for loss of an external system

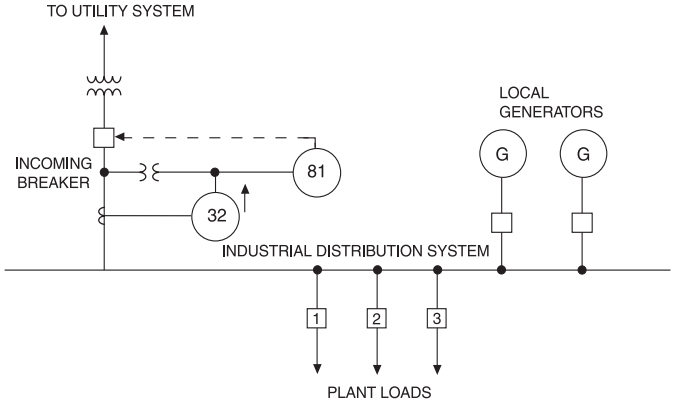

Figure 4-27c—Tripping incoming breaker for power outflow to external loads

When an overload exists (i.e., the load exceeds the available generation), the generators begin to slow down and the frequency drops. The underfrequency relay operates at a specific (i.e., preset) frequency below nominal to trip off a predetermined amount of load so the most critical load remains running with the available generation. More than one underfrequency relay may be used to permit a number of steps of load shedding, depending on the severity of the overload. For instance, *X*% of the load may be removed at 59.5 Hz, *Y*% of the load removed at 59 Hz, and *Z*% of the load removed at 58.5 Hz, for a three-step load-shedding scheme. The number of load-shedding steps, the amount of load shed at each step, and the frequency settings for each step should be determined by a system study. Also, assigning a priority to each load is necessary so that the loads are removed on a priority basis, with the lowest priority loads being removed first.

Overfrequency relays are often applied to generators. These relays protect against overspeed during startup or when the unit is suddenly separated from the system with little or no load.

Copyright © 2001 IEEE. All rights reserved.

Copyright The Institute of Electrical and Electronics Engineers, Inc.
Provided by IHS under license with IEEE
No reproduction or networking permitted without license from IHS
Not for Resale

Relay contacts either sound an alarm or remove fuel input to the prime mover. In other words, for gas or diesel engines or turbines, the fuel line supply would be closed; for steam turbines or steam engines, the steam supply valves would be closed; and for hydro turbines, the wicket gates would be closed and the water supply would then be closed off.

4.4.13.2 Operation principles

4.4.13.2.1 Electromechanical design

Two types of electromechanical frequency relays are available: induction disk and induction cup (or cylinder).

The induction disk relay is subjected to two ac fluxes whose phase relationship changes with frequency to produce contact-opening torque above the frequency setting and closing torque below it. A time dial is used to adjust the initial contact separation that determines the operating time for a given applied frequency. The greater the rate at which the frequency drops, the faster the relay operates for a given time-dial setting. The induction disk underfrequency relay is accurate to within 0.1 Hz to 0.2 Hz and is designed for applications where high tripping speed is not essential.

The induction cup underfrequency relay is more accurate and faster than the induction disk model. The operating principle is the same as the induction disk relay. Two ac fluxes, whose phase relationship changes with frequency, produce contact-closing torque in the cup unit when the frequency drops below the setting. The contacts have a fixed initial separation; the greater the rate of frequency decline, the faster the contacts close. The contacts may close in as little as 5 cycles to 6 cycles after application of the underfrequency potential. Because phase shifts in the ac potential supply due to faults or fault clearing may cause incorrect operation, at least 6 cycles of intentional delay should be added before tripping.

The frequency accuracy of this relay is about ±0.1 Hz. Induction disk and induction cup underfrequency relays usually may be adjusted at 90% to 100% of rated frequency; overfrequency relays, from 100% to 110%.

Electromechanical frequency relays are typically available with only one set point per relay. In applications where multiple setpoints are required, additional relays would be necessary for each set point.

4.4.13.2.2 Static design

Some static or microprocessor relays operate on a specific frequency with definite or inverse characteristic operating times. Another static relay design operates on the rate of change of frequency. Static relays typically measure once each cycle at a zero crossing on the input voltage waveform. The relay calculates the frequency based on the time between measurement points each cycle. If the frequency is outside the set range of operation for the set time delay, the output contacts close and provide a trip signal.

Copyright © 2001 IEEE. All rights reserved.

--`,,`-`-`,,`,,`,`,,`---

Copyright The Institute of Electrical and Electronics Engineers, Inc.
Provided by IHS under license with IEEE
No reproduction or networking permitted without license from IHS Not for Resale

Static frequency relays can also inhibit operation when the voltage falls below a preset value. This action reduces the probability of operation under fault conditions when the voltage, and possibly the frequency, may drop.

In addition, static frequency relays are available with multiple set points (up to four set points) in one relay, each selectable to operate for underfrequency or overfrequency conditions.

4.4.14 Lockout relay (Device 86)

Although a lockout relay is not a protective relay, it is included in this chapter because it is used widely in conjunction with relaying schemes. This relay is a high-speed, multicontact, manually or electrically reset auxiliary relay for multiplying contacts, increasing contact rating, isolating circuits, and tripping and locking out circuit breakers. The relay is operated by differential relays, such as a transformer or bus differential, and other protective relays. The lockout relay in turn trips all the source and feeder circuit breakers as required to isolate the fault. The relay must be reset before any of the circuit breakers can be reenergized. The manual reset prevents reclosing the breakers before the fault is repaired.

In general, the contacts can carry and interrupt higher values of control power current than the protective relay can. In addition to tripping functions with the normally open (NO) contacts, the relay normally closed (NC) contacts are opened when tripped, and these NC contacts prevent any automatic reclosure until Device 86 has been manually reset.

4.4.15 Differential and pilot wire relays (Device 87)

4.4.15.1 Application of differential relays

A differential relay operates by summing the current flowing into and out of a protected circuit zone. Normally, the current flowing into a circuit zone equals the current flowing out, and no differential current flows in the relay. If a fault occurs in the circuit zone, part of the current flowing in is diverted into the fault; and the current flowing out of the circuit element is less than the current flowing in. As a result, a differential current flows in the relay. If this differential current is above a preset value, the relay operates. Differential protection may be applied to any section of a circuit and is used extensively to detect and initiate the isolation of internal faults in large motors, generators, lines or cables, transformers, and buses. It detects these faults immediately and is designed to be insensitive to overloads or faults outside the differentially protected section.

Differential relays generally do not detect turn-to-turn coil failures on motors, generators, or transformers.

Differential relays provide high-speed, sensitive, and inherently selective protection. The types of relays are

a) Overcurrent differential
b) Percentage differential

Copyright © 2001 IEEE. All rights reserved.

Copyright The Institute of Electrical and Electronics Engineers, Inc.
Provided by IHS under license with IEEE
No reproduction or networking permitted without license from IHS
Not for Resale

1) Fixed percentage (restraint) differential
2) Variable percentage (restraint) differential
3) Harmonic-restraint percentage differential

c) High-impedance differential relay
d) Pilot wire differential

The correct selection and application of CTs used in differential protection schemes are critical to the proper operation of these schemes. The proper matching of relay and CT characteristics is a prime design requirement (see Chapter 3).

4.4.15.2 Overcurrent differential relays (Device 87)

An overcurrent differential relay operates on a fixed current differential and can be easily affected by CT errors. It is the least expensive form of differential relaying, but it has the least sensitive settings compared to other forms, especially for detecting low-level ground faults.

Figure 4-28a shows differential protection applied on one phase. (Three relays—one per phase—are required.) Both ends of the protection zone should be available for the installation of the CTs. Under normal conditions, the current flowing in each CT secondary winding is the same, and the differential current flowing through the relay operating winding is zero. For an internal fault in the zone, the CT currents are no longer the same, and the differential current flows through the relay operating circuit. When the current through the relay's operating circuit exceeds its pickup setting, the relay provides an output to trip the circuit breakers.

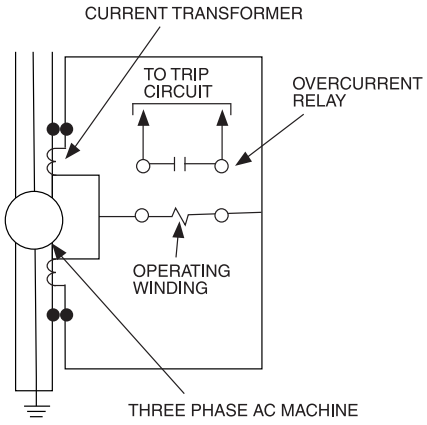

Figure 4-28a—Overcurrent relay used for differential protection, one phase shown

Under normal operating conditions, circumstances may produce a differential current to flow through the operating winding of the relay. One example of this situation is CT performance.

CTs do not always perform exactly in accordance with their ratios. This difference is caused by minor variations in manufacture, differences in secondary loadings, and differences in magnetic history. Where a prolonged dc component exists in the primary fault current, such

Copyright © 2001 IEEE. All rights reserved.

--`,-`-`,,`,,`,`,,`---

Copyright The Institute of Electrical and Electronics Engineers, Inc.
Provided by IHS under license with IEEE
No reproduction or networking permitted without license from IHS Not for Resale

as invariably occurs close to generators, the CTs do not saturate equally, and a substantial relay operating current can be expected to flow. Hence, if overcurrent differential relays are used, they have to be set so that they do not operate on the maximum error current, which can flow in the relay during an external fault. Because of the sensitiveness of this circuit, the overcurrent relay pickup should be set high enough to allow for these minor variations. However, while increasing its security, the higher pickup settings reduce the sensitivity of this circuit.

To address this problem without sacrificing sensitivity, the percentage differential relay is usually used. A high-speed, economical overcurrent differential relay can be applied to motor protection for phase-to-phase and phase-to-ground faults. Figure 4-28b shows how one toroidal CT per phase measures the phase current and produces a differential current to the relay for a fault. Fault currents as low as 2 A may be detected, and this application should follow the manufacturer's recommendations concerning the CTs and the relay.

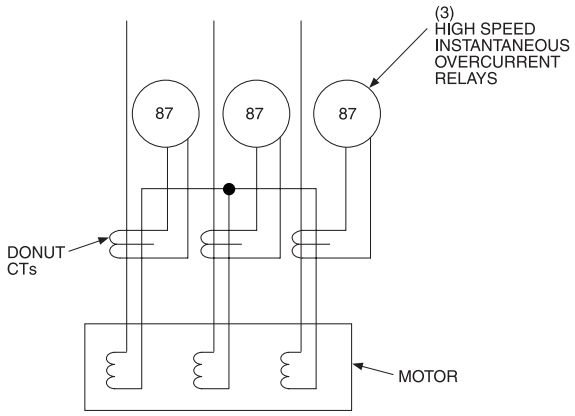

Figure 4-28b—Differential protection of a motor using donut CTs and overcurrent relays

4.4.15.3 Percentage differential relays (Device 87T, Device 87B, Device 87M, and Device 87G)

4.4.15.3.1 Application

Percentage differential relays are generally used in transformer, bus, motor, or generator applications. The advantage of this relay is its insensitivity to high currents flowing into faults outside its protection zone when CT errors are more likely to produce erroneous differential currents. However, the relay is highly sensitive to faults within its zone of protection.

The three types of percentage differential relays are fixed percentage, variable percentage, and harmonic-restraint percentage. The fixed percentage and variable percentage relays are used for all the applications mentioned in the previous paragraph, but the harmonic-restraint percentage differential relay is used primarily for transformer applications.

Copyright © 2001 IEEE. All rights reserved.

Copyright The Institute of Electrical and Electronics Engineers, Inc.
Provided by IHS under license with IEEE
No reproduction or networking permitted without license from IHS
Not for Resale

The variable percentage differential relay is more sensitive and can detect low-level faults within its protection zone and is less likely to have nuisance tripping for severe faults outside its protection zone than the fixed percentage relay. Generator protection relays are usually variable percentage. Less sensitive variable percentage differential relays should be selected for transformer protection compared with the fixed percentage differential relays used for bus, motor, or generator applications. This distinction is made to prevent nuisance tripping due to magnetizing inrush current that flows through only the power transformer's primary circuit CTs during energization. For transformers, the standard sensitivities of these relays approach current values that may be as high as 50% of the transformer's full load current.

The harmonic-restraint percentage differential relay has the feature of offering more restraint to tripping when transformer inrush currents are present compared to the standard percentage differential relay. Hence, the relay can achieve fault current sensitivities (or slope settings) of between 15% and 60% of the transformer's rated current. Because the inrush currents are rich in harmonics, with second harmonic predominant, a combination of the second and higher order harmonic currents is used to restrain the relay on inrush.

Because of the different voltage levels and CT ratios, matching the secondary currents from the transformer into the relay becomes necessary when applying percentage differential protection to power transformers. The relay accomplishes this task by providing a range of taps that scale the current into each input to the desired magnitude for internal comparison. The current from the input circuits should be matched typically to within 5%. This normally can be accomplished by selecting the appropriate combination of relay taps. However, in cases where the range of tap settings is too limited, tapped auxiliary CTs are required. Figure 4-29 shows a connection diagram for a fixed percentage differential relay applied to protect a transformer.

Electromechanical percentage differential relays used for bus protection applications typically do not have taps. Therefore, all CTs should have the same ratio and characteristics. Static relays, however, are available with taps for use with CTs that have different ratios.

4.4.15.3.2 Operating principles

4.4.15.3.2.1 Electromechanical design

The electromechanical differential relay uses the induction principle. It is connected as shown in Figure 4-30. Under normal conditions, current circulates through the CTs and relay-restraining coils R_1 and R_2; no current flows through the operating coil O. The current in the relay-restraining coils produces a restraining or contact-opening torque. An internal fault in the protected machine unbalances the secondary currents and forces a differential current I_0 through the relay-operating coil.

For a fixed percentage differential relay, the amount of differential or operating current required to overcome the restraining torque and close the relay is a fixed (or constant) percentage of the restraining current. The operating characteristic for this relay is shown in Figure 4-31a. As an example, for a setting of 10% on a fixed percentage differential relay, the relay would trip if the operating current were greater than or equal to 10% of the restraint

 Copyright © 2001 IEEE. All rights reserved.

Copyright The Institute of Electrical and Electronics Engineers, Inc.
Provided by IHS under license with IEEE
No reproduction or networking permitted without license from IHS Not for Resale

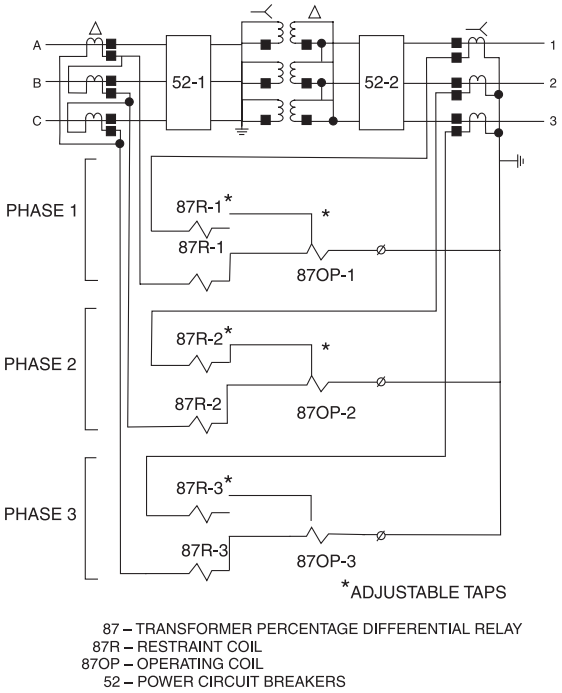

Figure 4-29—Basic relay connections (one phase) for fixed percentage restraint differential relay

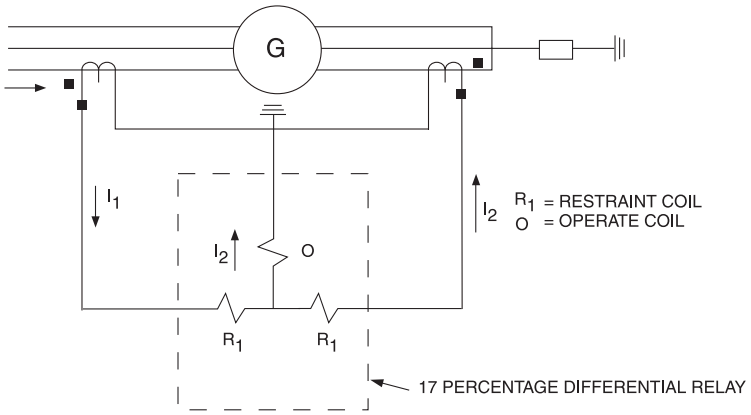

Figure 4-30—Basic relay connections (one phase) for fixed percentage restraint differential relay

current. In a variable percentage relay, the operating current required to operate the relay is a variable percentage of the restraining current, having a higher percentage at high fault-current levels. The operating characteristic for this relay is shown in Figure 4-31b.

Copyright © 2001 IEEE. All rights reserved.

Copyright The Institute of Electrical and Electronics Engineers, Inc.
Provided by IHS under license with IEEE
No reproduction or networking permitted without license from IHS
Not for Resale

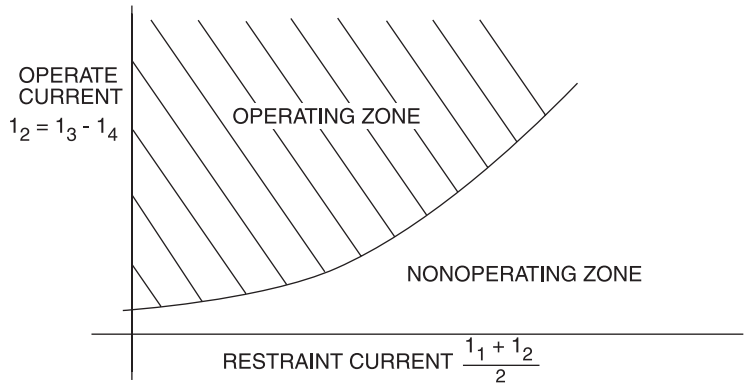

Figure 4-31a—Typical operating characteristic of a fixed percentage restraint differential relay

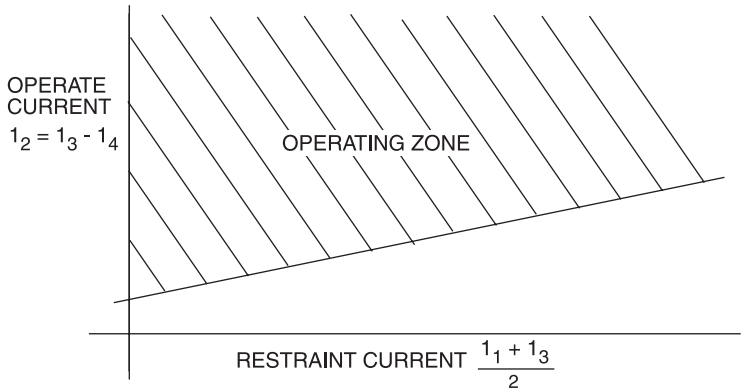

Figure 4-31b—Typical operating characteristic of a variable percentage restraint differential relay

The number of restraint elements in the relay is a function of application for which the relay is designed. A generator or motor differential relay contains two restraint elements, where a relay intended for bus or transformer protection may have multiple restraint elements. All relays are single-phase units and thus require three relays for a complete installation.

4.4.15.3.2.2 Static design

The static percentage differential relay consists of various functions, as shown in the block diagram of Figure 4-32. Because of the flexibility of the static technology, these functions can be configured for a single-phase unit or connected together to provide a three-phase relay. The relay generally consists of restraint, operating, sensing, trip, and indicating functions. If the relay is a microprocessor-based design, the restraint and operating functions are accomplished with the microprocessor.

Copyright © 2001 IEEE. All rights reserved.

Copyright The Institute of Electrical and Electronics Engineers, Inc.
Provided by IHS under license with IEEE
No reproduction or networking permitted without license from IHS
Not for Resale

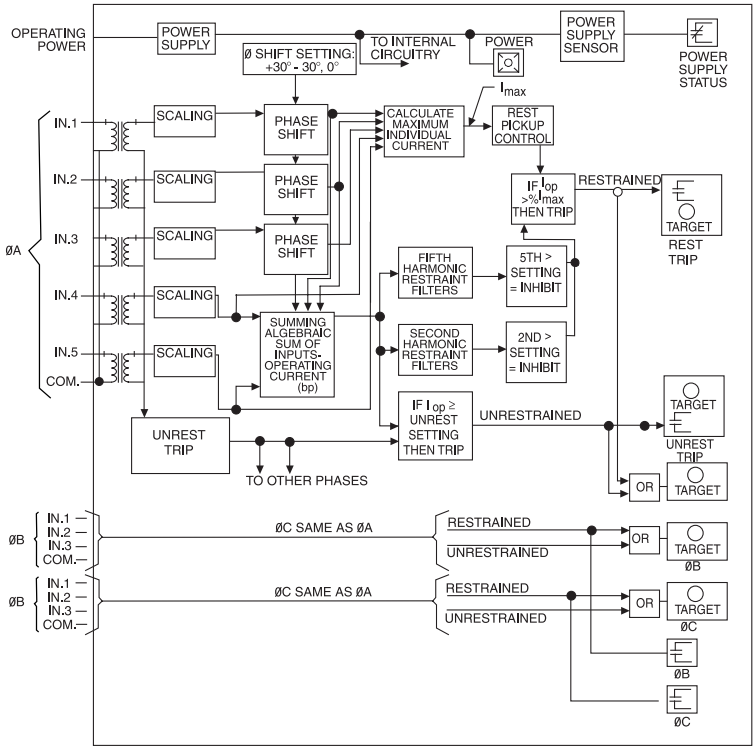

Figure 4-32—Functional block diagram for a static percentage differential relay

The input current is normally scaled to the appropriate magnitude based on the tap setting of each input circuit. Depending on relay design, these scaled quantities are then input to a phase-shifting circuit or directly into the restraining functions. The restraint function senses the phase current and selects its reference value. The restraint reference level, typically a function of the input current, may vary between different manufacturers. The operating current for each phase is then compared to the percentage slope setting and the restraint reference levels. If the magnitude of current in the operating circuit is in excess of the set percentage restraint, the relay closes its contact to trip the circuit breakers.

4.4.15.3.3 Harmonic-restraint percentage differential relays (Device 87T)

The connection diagram for delta-wye transformer protection using a harmonic-restraint percentage differential relay is shown in Figure 4-33. Harmonic-restraint relays use the harmonic content of transformer energization current to inhibit differential operation. When a transformer is energized, the current on one side increases, producing a difference current that would cause the differential relay to operate. This energization current contains a significant magnitude of certain harmonic currents. The relay measures the magnitude of various harmonic currents and, when above a preset percentage of fundamental, inhibits operation. Protection for faults during transformer energization is provided by an unrestrained overcurrent function.

Copyright © 2001 IEEE. All rights reserved.

Copyright The Institute of Electrical and Electronics Engineers, Inc.
Provided by IHS under license with IEEE
No reproduction or networking permitted without license from IHS
Not for Resale

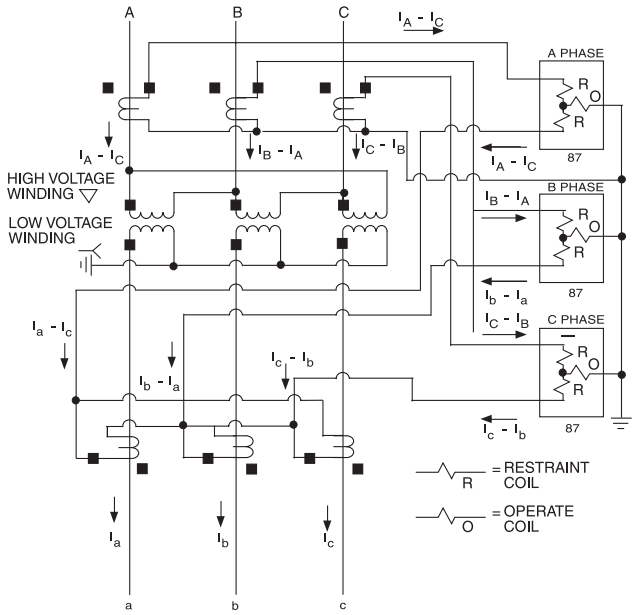

Figure 4-33—Harmonic-restraint percentage differential relay connection diagram for a delta-wye connected transformer

The electromechanical relay consists of transformer and rectifier units connected in restraint and operating configurations. The output of these units is applied to the differential unit and causes it to close its trip contact when the operating current exceeds the restraint current by an amount greater than the relay characteristic.

The harmonic-restraint element is constructed similarly, except that filters block the fundamental frequency current to the restraint unit while directing harmonic current to the restraint unit. The operating unit of this element receives only fundamental frequency current, while harmonics are blocked, causing the relay to be insensitive to the harmonic current that flows during transformer energization. An instantaneous trip unit is included in the operating circuit to provide fast operating times on very high internal fault currents. These relays have current taps that are used to correct for mismatch between the currents from the CTs in the power transformer's primary and secondary circuits. Relay sensitivity can be adjusted by selecting an appropriate slope tap unless the relay has a variable percentage characteristic. Tap changers should be considered in the selection of the slope. A tap changer range of ±5% would add 10% to the slope of whatever else is considered.

The overall relay operating time is between 1 cycle and 2 cycles.

Static relays similarly filter the input currents to the relay for various harmonic currents. The output is then compared to the reference setting and, if in excess, provides a signal to inhibit relay operation during transformer energization. This situation is shown in Figure 4-32.

Copyright © 2001 IEEE. All rights reserved.

--`,,`-`-`,,`,,`,`,,`---

Copyright The Institute of Electrical and Electronics Engineers, Inc.
Provided by IHS under license with IEEE
No reproduction or networking permitted without license from IHS
Not for Resale

4.4.15.4 High-impedance differential relays (Device 87B)

The high-impedance differential relay, used primarily for bus protection, avoids the problem of unequal CT performance by loading transformers with a high-impedance relay unit. For faults outside the protected zone (i.e., external faults), there is a high degree of error in the CTs in the faulted circuit. A higher-than-normal voltage is developed across the relay (typically having an impedance of 1700 Ω to 2600 Ω), and hence a higher voltage is impressed across the CT, which increases the CT excitation current. As a result, CT error currents are forced through the equivalent magnetizing impedance of the CTs rather than through the high impedance of the relay. However, for faults within the protected zone, the CT error currents are small, the CT magnetizing impedances appear to be almost infinite, and the current flows through the relay coil.

The connection diagram for the high-impedance differential relay, designed to operate on bus circuits, is shown in Figure 4-34. The electromechanical relay consists of an overvoltage unit and an instantaneous overcurrent unit (either plunger or clapper). The overvoltage unit is connected across the paralleled secondaries of the CTs. The magnitude of voltage across the relay is a function of the fault location (i.e., internal or external to the protected zone), the resistance of the CT secondary leads and CT, the CT performance, the CT ratio, and the magnitude of fault current. The overvoltage unit operates when the voltage exceeds the pickup setting. When a fault occurs in the relay's protection zone, the CT current is directed to the high-impedance relay. A nonlinear resistor in the relay limits the voltage developed across the relay to a value that does not overstress the relay's insulation. This nonlinear element limits the voltage by permitting a large current to flow through it. The instantaneous overcurrent unit in the relay is connected in series with the nonlinear resistor and operates when the current exceeds its pickup setting. This relay provides fast tripping times of 0.5 cycle to 1.5 cycles on very severe faults within its protection zone.

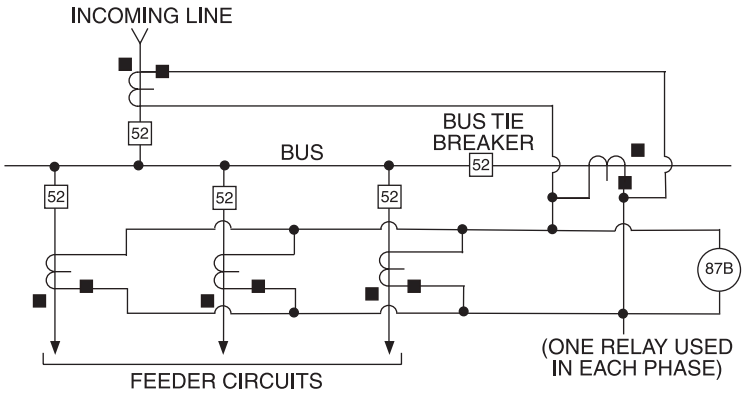

Figure 4-34—High-impedance differential relay used in bus protection, one phase shown

Copyright © 2001 IEEE. All rights reserved.

Copyright The Institute of Electrical and Electronics Engineers, Inc.
Provided by IHS under license with IEEE
No reproduction or networking permitted without license from IHS
Not for Resale

4.4.15.5 Pilot wire differential relays (Device 87L)

4.4.15.5.1 Application

The differential relays discussed thus far in 4.4.15 cannot be used to protect long lines or cables because of the distances required to bring CT leads and breaker tripping wires to the relay from both ends of the line. Therefore, a special type of relay called a pilot wire differential relay is used to protect lines.

The pilot wire differential relay is a high-speed relay designed for phase and ground protection for two- and three-terminal transmission and distribution lines. They are generally applied on short lines, normally less than 40 km long. Their operating speed is approximately 20 ms. One of the typical pilot wire relays is discussed in 4.4.15.5.2.

4.4.15.5.2 Operating principles of a current pilot wire relay

Pilot wire differential relaying is a relay system consisting of two identical relays located at each end of a line (see Figure 4-35). The relays are connected together with a two-conductor pilot wire. The output from three individual phase CTs is applied to a sequence network that produces a composite current that is proportional to the line current and has a polarity related to line current flow direction. Each relay contains a restraint element and an operate element. The restraint elements are in series with the pilot wire, while the operate elements of each relay are in parallel with the pilot wire. The circuit is basically that of the percentage (restraint) differential relay with the operating circuit broken into parallel circuits separated by pilot wires. This relay is available in both electromechanical and static designs.

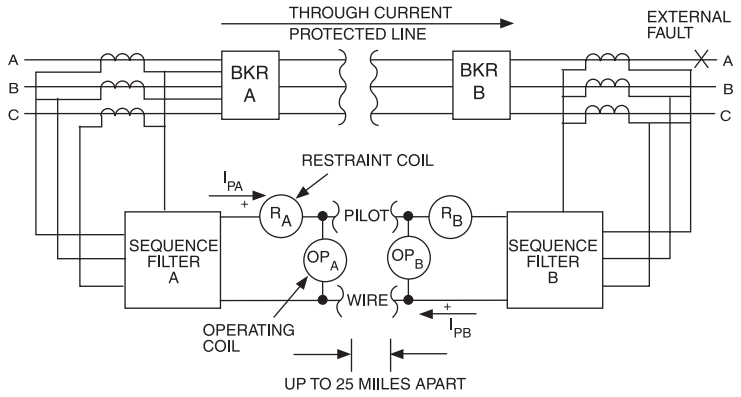

Figure 4-35—Simplified connections for a pilot wire differential relay

When the fault is external to the relay's protective zone (see Figure 4-35), current flows in the pilot wire through each relay's restraint coils, but not through the relay's operating coil. If the fault is within the relay's protective zone and current is flowing into the fault from both directions, the direction of pilot wire current I_{PA} remains the same; but the direction of current I_{PB}

Copyright © 2001 IEEE. All rights reserved.

Copyright The Institute of Electrical and Electronics Engineers, Inc.
Provided by IHS under license with IEEE
No reproduction or networking permitted without license from IHS
Not for Resale

reverses and forces current to flow into each relay's operating coil. If the fault current flows through circuit breaker *A* only, the relay at *A* still passes sufficient current through the pilot wire to operate the relay at circuit breaker *B*.

The relay is designed to give complete phase and ground-fault protection. The ground protection is derived from the residual connection of the line CTs, and its sensitivity depends on the CT ratio. A static pilot wire relay is available that accepts an input from a low-ratio zero-sequence CT. This feature allows for a sensing low-level ground current that is useful when applied on a low-resistance grounded system.

Compliance with the manufacturer's application instructions is necessary to provide a total system of protection.

4.4.15.5.3 Pilot wire specifications

To insure the pilot relay system is reliable, details should be specified on the construction and installation of the pilot wires. Construction requirements should include wire size, insulation, twist length, shielding, and jacketing. Installation instructions should include whether overhead or underground (if overhead, include spacing below any power lines), splicing, where to ground the shield, protection of pilot wire shield against excessive currents, protection of cable and relays from overvoltages, and how to treat spare wires that are in the same conductor bundle as the pilot wires.

Much controversy exists on what the exact specifications should be because many variations have worked successfully.

A sample specification that has proved satisfactory at a number of industrial sites, for both overhead and underground applications, is given in 4.4.15.5.3.1 and 4.4.15.5.3.2.

4.4.15.5.3.1 Pilot wire construction requirements

a) *Wire size*. Six pairs of AWG No 19 solid annealed copper conductors shall be used. (Maximum pilot wire loop resistance should be less than 2000 Ω and maximum capacitance is 1.5 μF for a two-terminal system.)
b) *Insulation*. Each conductor shall be insulated with 0.381 mm polyethylene. The conductor shall be bound with a nonhydroscopic binder tape, over which shall be extruded a high-dielectric polyethylene inner jacket. The jacket shall have a nominal thickness of 1.143 mm.
c) *Twist length*. The pairs shall be twisted with a minimum twist length of 178 mm. The twist length of each pair shall be different.
d) *Shield*. Over the inner jacket shall be applied a spiral-wound shield tape with a minimum overlap of 20% of the tape width. The tape shall be 0.127 mm thick copper or 0.203 mm thick aluminum.
e) *Overall jacket*. An overall jacket shall be applied over the shield tape. The thickness of the jacket over the shield tape shall be 0.152 mm. The overall jacket shall encompass the cable and messenger in a Figure-8 configuration. The jacket compound shall be applied so that it completely floods the interstices of the messenger. The outer

Copyright © 2001 IEEE. All rights reserved.

Copyright The Institute of Electrical and Electronics Engineers, Inc.
Provided by IHS under license with IEEE
No reproduction or networking permitted without license from IHS
Not for Resale

jacket material shall be pigmented for protection from radiation and may be either polyvinyl chloride or polyethylene.

f) *Messenger.* The messenger shall be 6.35 mm, 7-strand, extra strength steel (minimum breaking strength, 30 kN) with Class A zinc coating. Messenger shall comply with ASTM A-475-69.

g) *Cable*. The cable shall comply with the requirements of ICEA S-61-402 for Type D control cable for pilot wire duty.

h) *DC high-potential test.* In addition to the testing required by the reference specifications, the completed cable shall be subjected to a 20 000 V dc high-potential test in accordance with IEEE standards between conductors and shield and between shield and the messenger.

4.4.15.5.3.2 Pilot wire installation instructions

a) Ground the messenger wire at each pole.

b) Ground the shield at each terminal.
   1) Connect shield to station ground.
   2) Shield should be continuous end to end.
   3) Protect shield from possible transient overcurrent during system faults with parallel power conductor. Because potential differences in grounds may exist during fault conditions, a conductor should be connected in parallel with the shield to carry the current that may flow between grounds rather than permit the current to flow through the shield.

c) Splices (if required) shall be in line using Scotchmold Epoxy splice kits or equal.

d) Insulating transformers shall not have a midpoint grounded on a high-voltage side.

e) Neutralizing transformers shall not be used.

f) Carbon gaps shall not be used.

g) Mutual drainage reactors or gas discharge tubes, or both, shall not be used.

h) If any pair in cable is used for purposes other than pilot wire, it shall be
   1) Twisted pair with twist length different from pilot wire pair,
   2) Ungrounded,
   3) Terminated at each end in 10 kV (minimum) insulating transformers or equivalent.

i) Unused pairs in cable shall be short-circuited and grounded at only one end.

j) Terminal blocks are acceptable only if they are mounted on suitable standoff insulators and only if suitable clearances to ground and to shields are maintained.

k) Line clearances shall comply with the National Electrical Safety Code® (NESC®) (ASC C2-2002).

4.4.15.5.4 Application guidelines

Other devices are required and applied with each relay terminal to provide a complete system. These devices include a milliammeter, switch, and auxiliary transformer for testing; insulating transformer for pilot wire isolation; and pilot wire supervision relays for detection and alarm of pilot wire problems. An optional neutralizing reactor is applied where the difference between station ground and remote ground can exceed 600 V rms during power system faults. This rise in ground potential appears across the neutralizing transformer inserted in the

 Copyright © 2001 IEEE. All rights reserved.

Copyright The Institute of Electrical and Electronics Engineers, Inc.
Provided by IHS under license with IEEE
No reproduction or networking permitted without license from IHS Not for Resale

pilot wire. In addition, an optional drainage reactor is applied to drain off longitudinally induced voltages that may occur by lightning surges (not a direct stroke) or the parallel association of the pilot wire with faulted power circuits. By forcing equal current flow from the two wires into ground, it minimizes wire-to-wire voltages.

4.4.15.5.5 Taps

Current taps are provided to give adjustable minimum trip selection and sequence filter circuit taps that permit phase and ground sensitivity selection.

4.5 References

This recommended practice shall be used in conjunction with the following standards. When the following standards are superseded by an approved revision, the revision shall apply.

ASC C2-2002, National Electrical Safety Code® (NESC®).[3]

ASTM A-475-69, Specification for Zinc-Coated Steel Wire Strand.[4]

ICEA S-61-402, Thermalplastic-Insulated Wire and Cable for the Transmission and Distribution of Electrical Energy.[5]

IEEE Std 141-1993 (Reaff 1999), IEEE Recommended Practice for Electric Power Distribution for Industrial Plants (*IEEE Red Book*).[6]

IEEE Std C37.2-1996, IEEE Standard Electrical Power System Device Function Numbers and Contact Designations.

4.6 Bibliography

[B1] AIEE Committee Report, “Bibliography of Industrial System Coordination and Protection Literature, *IEEE Transactions on Industry Applications*, vol. IA-82, pp. 1–2, Mar. 1963.

[B2] Anderson, P. M., *Analysis of Faulted Power Systems*. Ames, IA: Iowa State University Press, 1973.

[B3] Andrichak, J. G., “Polarizing Sources for Directional Ground Relays,” Presented to the Electric Council of New England, South Portland, ME, Oct. 11, 1973.

[3]The NESC is available from the Institute of Electrical and Electronics Engineers, 445 Hoes Lane, P.O. Box 1331, Piscataway, NJ 08855-1331, USA (http://standards.ieee.org/).

[4]ASTM publications are available from the American Society for Testing and Materials, 100 Barr Harbor Drive, West Conshohocken, PA 19428-2959, USA (http://www.astm.org/).

[5]ICEA publications are available from ICEA, P.O. Box 20048, Minneapolis, MN 55420, USA (http://www.icea.org).

[6]IEEE publications are available from the Institute of Electrical and Electronics Engineers, 445 Hoes Lane, P.O. Box 1331, Piscataway, NJ 08855-1331, USA (http://standards.ieee.org/).

Copyright © 2001 IEEE. All rights reserved.

Copyright The Institute of Electrical and Electronics Engineers, Inc.
Provided by IHS under license with IEEE
No reproduction or networking permitted without license from IHS
Not for Resale

[B4] *Applied Protective Relaying*. Newark, N.J.: Westinghouse Electric Corporation, 1976.

[B5] "The Art of Protective Relaying," General Electric Company, Philadelphia, 1957, Bulletin GET-1768.

[B6] Barkle, J. E., and Glassburn, W. E., "Protection of Generators Against Unbalanced Currents," *AIEE Transactions*, vol. 72, pt III, pp. 282–286, 1953.

[B7] Berdy, J., "Loss of Excitation Protection for Modern Synchronous Generators," *IEEE Transactions on Power Apparatus and Systems*, vol. PAS-94, pp. 1457–1463, 1481–1483, 1975.

[B8] Blackburn, J. L., "Ground Relay Polarization," *AIEE Transactions on Power Apparatus and Systems*, vol. PAS-71, pt III, pp. 1088–1095, Dec. 1952.

[B9] Blackburn, J. L., *Protective Relaying, Principles and Applications*, 2nd ed. New York: Mercel Dekker, Inc., 1998.

[B10] Blackburn, J. L., "Voltage Induction in Parallel Transmission Circuits," *IEEE Transactions on Power Apparatus and Systems*, vol. PAS-81, pt III, pp. 921–929, 1962.

[B11] Boothman, D. R., Elgar, E. C., Rehder, R. H., and Wooddall, R. J., "Thermal Tracking—A Rational Approach to Motor Protection," *IEEE Transactions on Power Apparatus and Systems*, vol. PAS-93, no. 5, pp. 1335–1344, Sept./Oct. 1974.

[B12] Bottrell, G. W., and Yu, L. Y., "Motor Behavior Through Power System Disturbances," *IEEE Transactions on Industry Applications*, vol. IA-16, no. 5, pp. 600–605, Sept./Oct. 1980.

[B13] Brightman, F. P., "More About Setting Industrial Relays," *AIEE Transactions on Power Apparatus and Systems*, vol. PAS-73, pt. III-A, pp. 397–406, 1954.

[B14] Brightman, F. P., "Selecting AC Overcurrent Protective Device Settings for Industrial Plants," *AIEE Transactions on Industry Applications*, vol. IA-71, pt. II, pp. 203–211, Sept. 1952.

[B15] Burke, J. J., Koch, R. F., and Powell, L. J., "A Comparison of Solid-state and Electromechanical Time-Overcurrent Relay Characteristics, Application and Testing," Paper presented at the Pennsylvania Electric Association Relay Committee Meeting, Philadelphia, Feb. 14, 1975.

[B16] Calhoun, H. J., and Hoinowski, E. R., "Solid-State CO Past and Present," Presented at the Pennsylvania Electric Association Relay Committee Meeting, Hershey, PA, May 27, 1976.

[B17] Chumakov, W. V., and Downs, C. L., "Solid-State Relaying Applied to High-Voltage Distribution in Mining," Conference Record, IEEE IAS Mining Industry Technical Conference, Pittsburgh, pp. 136–153, June 7-8, 1979.

 Copyright © 2001 IEEE. All rights reserved.

--`,,`-`-`,,`,,`,`,,`---

Copyright The Institute of Electrical and Electronics Engineers, Inc.
Provided by IHS under license with IEEE
No reproduction or networking permitted without license from IHS Not for Resale

[B18] Clark, H. K., "Load Shedding for Industrial Plants," Conference Record, IEEE IAS Annual Meeting, pp. 725–733, Oct. 8–11, 1973.

[B19] Coffman, A. W., "Transient Voltage Phenomena in Relay and Control Circuits," Presented at the Pennsylvania Electric Association Relay Committee Meeting, Reading, PA, pp. 72–79, Feb. 25, 1977.

[B20] Cooke, J. L., "Fundamentals of Symmetrical Components," Paper presented to 19th Annual Conference for Protective Relay Engineers, Texas A&M University, Apr. 25–27, 1966.

[B21] Dalziel, C. F., and Steinback, E. W., "Underfrequency Protection of Power Systems for System Relief—Load Shedding—System Splitting," *AIEE Transactions on Power Apparatus and Systems*, vol. PAS-78, pt. III, pp. 1227–1238, Dec. 1959.

[B22] Dodds, G. B., and Marter, W. E., "Reactance Relays Discriminate Between Load-Transfer Currents and Fault Currents on 2300 V Station Service Generator Bus," *AIEE Transactions*, vol. 71, pt. III, pp. 1124–1128, Dec. 1952.

[B23] Dudor, J. S., and Padden, L. K., "Protective Relaying on Medium- and High-Voltage Systems," *Industry Applications Magazine*, pp. 27–34, Mar./Apr. 1996.

[B24] Dudor, J. S., and Padden, L. K., "Problems and Solutions for Protective Relay Applications in Petroleum Facilities—Some Protection Applications for Generators and Transformers," IEEE IAS PCIC Conference Record, pp. 131–144, 1995.

[B25] Einvall, C. H., and Linders, J. R., "A Static Directional Overcurrent Relay with Unique Characteristics and Its Applications," IEEE PES Winter Meeting, New York, Conference Paper A76-073-7, Jan. 25–30, 1976.

[B26] *Electrical Transmission and Distribution Reference Book*. East Pittsburgh, PA: Westinghouse Electric Corporation, 1964.

[B27] Estwick, C. F., "Real Power and Imaginary Power in AC Circuits," *AIEE Transactions*, vol. 72, pt. III, pp. 27–35, Feb. 1953.

[B28] Fawcett, D. V., "How to Select Overcurrent Relay Characteristics," *IEEE Transactions on Industry Applications*, vol. IA-82, pp. 94–104, May 1963.

[B29] Fawcett, D. V., "The Tie Between a Utility and an Industrial When the Industrial Has Generation," *AIEE Transactions on Industry Applications*, vol. IA-77, pt. II, pp. 136–143, July 1958.

[B30] Gilbert, M. M., and Bell, R. N., "Directional Relays Provide Differential Type Protection on Large Industrial Plant Power System," *AIEE Transactions on Industry Applications*, vol. IA-74, pt. II, pp. 220–227, Sept. 1955.

Copyright © 2001 IEEE. All rights reserved.

Copyright The Institute of Electrical and Electronics Engineers, Inc.
Provided by IHS under license with IEEE
No reproduction or networking permitted without license from IHS
Not for Resale

[B31] Glassburn, W. E., and Sharp, R. L., "A Transformer Differential Relay with Second-Harmonic Restraint," *AIEE Transactions*, vol. 77, pt. III, pp. 913–918, 1958.

[B32] Glassburn, W. E., and Sonnemann, W. K., "Principles of Induction Disk Relay Design," *AIEE Transactions*, vol. 72, pt. III, pp. 23–27, 1953.

[B33] Gleason, L. L., and Elmore, W. A., "Protection of 3-Phase Motors Against Single-Phase Operation," *AIEE Transactions*, vol. 77, pt. III, pp. 1112–1120, 1958.

[B34] Goff, L. E., Rook, M. J., and Powell, L. J., "Pilot-Wire Relay Applications in Industrial Plants Utilizing a New Static Pilot Wire Relay," Conference Record, IEEE IAS Annual Meeting, pp. 1195–1203, 1979.

[B35] Graham, D. J., Brown, P. G., and Winchester, R. L., "Generator Protection with a New Static Negative Sequence Relay," *IEEE Transactions on Power Apparatus and Systems*, vol. PAS-94, no. 4, pp. 1208–1213, July/Aug. 1975.

[B36] Griffin, C. H., "Development of Fault-Withstand Standards for Power Transformers," Presented to the Pennsylvania Electric Association Relay Committee Meeting, Erie, PA, May 23, 1980.

[B37] Griffin, C. H., and Pope, J. W., "Generator Ground Fault Protection Using Overcurrent, Overvoltage and Undervoltage Relays," Presented at IEEE PES 1982 Winter Meeting, New York, Paper 82WM171-7, Jan. 31-Feb. 5, 1982.

[B38] Harder, E. L., Klemmer, E. H., Sonnemann, W. K., and Wentz, E. C., "Linear Couplers for Bus Protection," *AIEE Transactions*, vol. 61, pp. 241–248, 1942.

[B39] Harder, E. L., and Marter, W. E., "Principles and Practices of Relaying in the United States," *AIEE Transactions*, vol. 67, pt. II, pp. 1005–1023, 1948.

[B40] Heidbreder, J. F., "Induction Motor Temperature Characteristics," *AIEE Transactions*, vol. 77, pt. III, pp. 800–804, 1958.

[B41] Hogrebe, L. F., "Switching Motor Loads in Emergency Power Systems," *Specifying Engineer*, May 1979.

[B42] Horowitz, S. H., and Phadke, A. G., *Power System Relaying*. New York: John Wiley & Sons, 1992.

[B43] IEEE Committee Report 76CH-1130-4PWR, "Transient Response of Current Transformers," Jan. 1976.

[B44] IEEE Committee Report 81WM-122-1, "Bibliography of Relay Literature, 1978-1979," Presented at IEEE PES Winter Meeting, Atlanta, GA, Feb. 1-6, 1981.

 Copyright © 2001 IEEE. All rights reserved.

--`,,`,,`-`-`,,`,,`,`,,`---

Copyright The Institute of Electrical and Electronics Engineers, Inc.
Provided by IHS under license with IEEE
No reproduction or networking permitted without license from IHS Not for Resale

[B45] IEEE Committee Report 81WM-121-3, “Review of Recent Practices and Trends in Protective Relaying,” IEEE PES Winter Meeting, Atlanta, GA, Feb. 1-6, 1981.

[B46] IEEE Project P490, Generator Ground Protection Guide (in preparation: PES Power System Relay Committee).

[B47] IEEE Special Publication S-117, Application and Protection of Pilot-Wire Circuits for Protective Relaying, 1960.

[B48] IEEE Std 241-1990 (Reaff 1997), IEEE Recommended Practice for Electric Power Systems in Commercial Buildings (*IEEE Gray Book*).

[B49] IEEE Std C37.90-1978, IEEE Relays and Relay Systems Associated with Electric Power Apparatus.

[B50] IEEE Std C37.91-1985, IEEE Guide for Protective Relay Applications to Power Transformers.

[B51] IEEE Std C37.95-1973, IEEE Guide for Protective Relaying of Utility-Consumer Interconnections.

[B52] IEEE Std C37.96-1976, IEEE Guide for AC Motor Protection.

[B53] IEEE Std C37.97-1979, IEEE Guide for Protective Relay Applications to Power System Buses.

[B54] IEEE Std C37.99-1980, IEEE Guide for Protection of Shunt Capacitor Banks.

[B55] IEEE Std C37.103 (in preparation: P815), IEEE Guide for Differential and Polarizing Relay Circuit Testing.

[B56] IEEE Std C57.13-1978, IEEE Standard Requirements for Instrument Transformers.

[B57] IEEE Std C57.105-1978, IEEE Guide for Application of Transformer Connections in Three-Phase Distribution Systems.

[B58] IEEE Working Group Report, “Application Considerations of Static Overcurrent Relays,” 1997.

[B59] Kelly, A. R., “Relay Response to Motor Residual Voltage During Automatic Transfers,” *AIEE Transactions on Industry Applications*, vol. IA-74, pt. II, pp. 245–252, Sept. 1955.

[B60] Kotheimer, W. C., and Mankoff, L. L., “Electromagnetic Interference and Solid-State Protective Relays,” *IEEE Transactions on Power Apparatus and Systems*, vol. PAS-96, no. 4, pp. 1311–1317, July/Aug. 1977.

Copyright © 2001 IEEE. All rights reserved.

Copyright The Institute of Electrical and Electronics Engineers, Inc.
Provided by IHS under license with IEEE
No reproduction or networking permitted without license from IHS Not for Resale

[B61] Lathrop, C. M., and Schleckser, C. E., "Protective Relaying on Industrial Power Systems," *AIEE Transactions*, vol. 70, pt. II, pp. 1341–1345, 1951.

[B62] Lazar, I., "Protective Relaying for AC Generators," *Power Engineering*, vol. 83, no. 2, pp. 70–73, Feb. 1979.

[B63] Lazar, I., "Protective Relaying for Motors," *Power Engineering*, vol. 82, no. 9, pp. 66–69, Sept. 1978.

[B64] Lazar, I., "Transformer Protection and Relaying in Industrial Power Plants," *Power Engineering*, vol. 83, no. 5, pp. 56–61, May 1979.

[B65] Lensner, H. W., "Protective Relaying Systems Using Pilot-Wire Channels," *AIEE Transactions on Power Apparatus and Systems*, vol. PAS-52, pp. 1107–1120, Feb. 1961.

[B66] Linders, J. R., "Characteristics of Industrial Power Systems as They Affect Protective Relaying," Conference Record, IEEE IAS Annual Meeting, pp. 825–831, Oct. 8-11, 1973.

[B67] Linders, J. R., "Electric Wave Distortions: Their Hidden Costs and Containment," *IEEE Transactions on Industry Applications*, vol. IA-15, no. 5, pp. 458–471, Sept./Oct. 1979.

[B68] Little, D. W., Potochney, G. J., and Pinkley, R. A., "A Time-Overcurrent Relay with Solid-State Circuitry," IEEE PES Winter Meeting, New York, Paper C75-061-7, Jan. 26-31, 1975.

[B69] Love, D. J., "Ground Fault Protection for Electric Utility Generating Station Medium Voltage Auxiliary Power System," Presented at IEEE PES Summer Meeting, Mexico City, Paper F77-693-5, July 1977. Also in *IEEE Transactions on Power Apparatus and Systems*, Mar./Apr. 1978.

[B70] Mason, C. R., *The Art and Science of Protective Relaying*. New York: John Wiley & Sons, 1956. Reprinted by General Electric Company, GER-3738.

[B71] Martiny, W. T., McCoy, R. M., and Margolis, H. B., "Thermal Relationships in an Induction Motor Under Normal and Abnormal Operation," *AIEE Transactions*, vol. 80, pt. III, pp. 66–76, 1961.

[B72] Mathur, Bal K., "A Closer Look at the Application and Setting of Protective Devices," IEEE I&CPS Technical Conference, Paper 79CH1460-51A, pp. 107–118, 1979.

[B73] Mentler, S., "A Half-Cycle Static Bus Protection Relay Using Instantaneous Voltage Measurement," *IEEE Transactions on Power Apparatus and Systems*, vol. PAS-94, no. 3, pp. 939–944, May/June 1975.

[B74] NFPA 70-1999, National Electrical Code® (NEC®).[7]

 Copyright © 2001 IEEE. All rights reserved.

--`,,`-`-`,,`,,`,`,,`---

Copyright The Institute of Electrical and Electronics Engineers, Inc.
Provided by IHS under license with IEEE
No reproduction or networking permitted without license from IHS Not for Resale

[B75] Nochumson, C. J., and Schwartzburg, W. E., "Transfer Considerations in Standby Generator Application," Conference Record, IEEE IAS Annual Meeting, pp. 1190–1198, Oct. 1-5, 1978.

[B76] Oakes, P. A., "Special Circuits for Ground Relay Current Polarization from Autotransformers Having Delta Tertiary," *AIEE Transactions on Power Apparatus and Systems*, vol. 78, pt. III, pp. 1191–1196, Dec. 1959.

[B77] Pope, J. W., "PURPA and the Customer-Utility Interconnections," Presented at the Conference for Protective Relay Engineers, Texas A&M University, Apr. 13-15.

[B78] Powell, L. J., "Current Transformer Burden and Saturation," Conference Record, IEEE IAS Annual Meeting, pp. 127–137, 1977.

[B79] "Power System Protection—Use of *R-X* Diagram," General Electric Company, Philadelphia, 1966, Bulletin GET-2230B.

[B80] *Protective Relays Application Guide*. Stafford, England: GEC Measurements Ltd, 1975.

[B81] Rook, M. J., Goff, L. E., Potochney, G. J., and Powell, L. J., "Application of Protective Relays on a Large Industrial-Utility Tie with Industrial Cogeneration," Presented at IEEE PES Winter Meeting, Atlanta, GA, Paper 81WM158-5, Feb. 1-6, 1981.

[B82] Rothe, F. S., and Concordia, C., "Transient Characteristics of Current Transformers During Faults—II," *AIEE Transactions*, vol. 66, pp. 731–734, 1947.

[B83] Seeley, H. T., Von Roeschlaub, F., "Instantaneous Bus-Differential Protection Using Bushing Current Transformers," *AIEE Transactions*, vol. 67, pp. 1709–1718, 1948.

[B84] Shulman, J. M., Elmore, W. A., and Bailey, K. D., "Motor Starting Protection by Impedance Sensing," *IEEE Transactions on Power Apparatus and Systems*, vol. PAS-97, no. 5, pp. 1689–1695, Sept./Oct. 1978.

[B85] Smith, D. H., "Problems Involving Industrial Plant-Utility Power System Interties," *IEEE Transactions on Industry Applications*, vol. IA-11, no. 6, Nov./Dec. 1975.

[B86] Sonnemann, W. K., "Phasors for Directional Relays," Presented at 21st Annual Conference for Protective Relay Engineers, Texas A&M University, Apr. 22-24, 1968.

[B87] Sonnemann, W. K., "A Study of Directional Element Connections for Phase Relays," *AIEE Transactions*, vol. 69, pp. 1438–1451, 1950.

[7]The NEC is published by the National Fire Protection Association, Batterymarch Park, Quincy, MA 02269, USA (http://www.nfpa.org/). Copies are also available from the Institute of Electrical and Electronics Engineers, 445 Hoes Lane, P.O. Box 1331, Piscataway, NJ 08855-1331, USA (http://standards.ieee.org/).

Copyright © 2001 IEEE. All rights reserved.

--`,,`-`-`,,`,,`,`,,`---
Copyright The Institute of Electrical and Electronics Engineers, Inc.
Provided by IHS under license with IEEE
No reproduction or networking permitted without license from IHS
Not for Resale

[B88] Stoller, S., "In-Plant Generator-Design Considerations for Industrial Facilities," *IEEE Transactions on Industry Applications*, vol. IA-12, no. 3, pp. 226–231, May/June 1976.

[B89] Tremaine, R. L., and Blackburn, J. L., "Loss-of-Field Protection for Synchronous Machines," *AIEE Transactions*, vol. 73, pt. III-A, pp. 765–777, 1954.

[B90] UL 1053-1976, Safety Standard for Ground-Fault Sensing and Relaying Equipment.[8]

[B91] Wagner, C. F., and Evans, R. D., *Symmetrical Components*. New York: McGraw-Hill, 1933.

[B92] Waldron, J. E., "Motor Characteristics and Protection," Presented at 29th Conference for Protective Relay Engineers, Texas A&M University, Apr. 12-14, 1976.

[B93] Waldron, J. E., "Innovations in Solid-State Protective Relays," *IEEE Transactions on Industry Applications*, vol. IA-14, no. 1, pp. 39–47, Jan./Feb. 1978.

[B94] Waldron, J. E., and Zocholl, S. E., "Design Considerations for a New Solid-State Transformer Differential Relay with Harmonic Restraint," Presented at 5th Annual Western Protective Relay Conference, Sacramento, CA, Oct. 15-18, 1978.

[B95] Walsh, G. F., "The Effects of Reclosing on Industrial Plants," *Proceedings of the American Power Conference*, vol. 23, pp. 768–778, 1961.

[B96] Warrington, A. C., "Application of the OHM and MHO Principle to Protective Relaying," *AIEE Transactions*, vol. 65, pp. 378–386, 490, 1946.

[B97] Warrington, A. C., *Protective Relays—Their Theory and Practice*. New York: Wiley, 1968.

[B98] Wentz, E. C., and Sonnemann, W. K., "Current Transformers and Relays for High-Speed Differential Protection, with Particular Reference to Offset Transient Currents," *AIEE Transactions*, vol. 59, pp. 481–488, 1144–1148, Aug. 1940.

[B99] West, D. J., "Current Transformer Application Guidelines," Conference Record, IEEE IAS Annual Meeting, pp. 110–126, 1977.

[B100] Wilson, J. R., "Power-Reactive Versions of R-X Diagrams," Presented at the 21st Annual Conference for Protective Relay Engineers, Texas A&M University, Apr. 22-24, 1968.

[B101] Zocholl, S. E., "Solid-State Overcurrent Relay with Conventional Time Current Curves," IEEE PES Winter Meeting, New York, Paper C72-042-5, Jan. 30-Feb. 4, 1972.

[8]UL standards are available from Global Engineering Documents, 15 Inverness Way East, Englewood, CO 80112, USA (http://global.ihs.com/).

 Copyright © 2001 IEEE. All rights reserved.

Copyright The Institute of Electrical and Electronics Engineers, Inc.
Provided by IHS under license with IEEE
No reproduction or networking permitted without license from IHS Not for Resale

[B102] Zocholl, S. E., and Pencinger, C. J., “Analysis of Overcurrent Relay Testing,” Presented at Pennsylvania Electric Association Relay Committee Meeting, Wilkes-Barre, PA, Oct. 6, 1977.

[B103] Zocholl, S. E., and Waldron, J. E., “Solid-State Relays for Generator Protection,” Presented at 6th Annual Western Protective Relay Conference, Spokane, WA, Oct. 16-18, 1979.

Copyright © 2001 IEEE. All rights reserved.

Copyright The Institute of Electrical and Electronics Engineers, Inc.
Provided by IHS under license with IEEE
No reproduction or networking permitted without license from IHS
Not for Resale

Copyright The Institute of Electrical and Electronics Engineers, Inc.
Provided by IHS under license with IEEE
No reproduction or networking permitted without license from IHS
Not for Resale

Chapter 5
Low-voltage fuses

5.1 General discussion

A low-voltage fuse is a device that protects a circuit by opening its current-responsive element when an overcurrent passes through it. A fuse, as defined in *The Authoritative Dictionary of IEEE Standards,* Seventh Edition,[1] is an overcurrent protective device with a circuit-opening fusible part that is heated and severed by the passage of the overcurrent through it.

NOTE—A fuse comprises all the parts that form a unit capable of performing the prescribed functions. It may or may not be the complete device necessary to connect it into an electric circuit.

A fuse has these functional characteristics:

a) It combines both the sensing and interrupting elements in one self-contained device.
b) It is direct acting in that it responds to a combination of magnitude and duration of circuit current flowing through it.
c) It normally does not include any provision for manually making and breaking the connection to an energized circuit, but requires separate devices (e.g., a disconnect switch) to perform this function.
d) It is a single-phase device. Only the fuse in the phase or phases subjected to overcurrent responds to de-energize the affected phase or phases of the circuit or equipment that is faulty.
e) After having interrupted an overcurrent, it is renewed by the replacement of its current-responsive element before restoration of service.

5.2 Definitions

The following terms may be found in other industry publications on fuses, but are included in this recommended practice for convenience.

5.2.1 ampere rating: The root-mean-square (rms) or dc current that the fuse carries continuously without deterioration and without exceeding temperature rise limits specified for that fuse.

5.2.2 arcing time: The time elapsing from the melting of the current-responsive element (e.g., the link) to the final interruption of the circuit. This time is dependent upon such factors as voltage and reactance of the circuit. (See Figure 5-1.)

[1]Information on references can be found in 5.9.

Copyright © 2001 IEEE. All rights reserved.

Copyright The Institute of Electrical and Electronics Engineers, Inc.
Provided by IHS under license with IEEE
No reproduction or networking permitted without license from IHS
Not for Resale

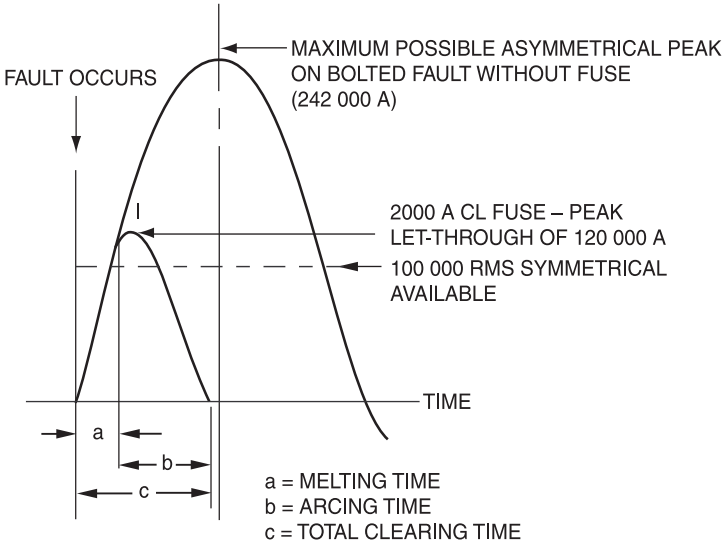

Figure 5-1—Typical current limitation showing peak let-through current and total clearing time

5.2.3 bridge: The narrowed portion of a fuse link that is expected to melt first. One link may have two or more bridges in parallel and in series as well. The shape and size of the bridge is a factor in determining the fuse characteristics under overload and fault current conditions.

5.2.4 current limiter: A device intended to function only on fault currents and not on lesser overcurrents regardless of time. Such a device is often used in series with a circuit breaker, which protects against overloads and low-level short circuits. However, cable limiters are types of current limiters that are used to provide short-circuit protection for cables, without being in series with another type of device.

5.2.5 current-limiting fuse: A fuse that interrupts all available currents above its threshold current and below its maximum interrupting rating, limits the clearing time at rated voltage to an interval equal to or less than the first major or symmetrical loop duration, and limits peak let-through current to a value less than the peak current that would be possible with the fuse replaced by a solid conductor of the same impedance. Only Class G, Class J, Class L, Class R, Class CC, and Class T may be marked "current limiting." Class K fuses are, in fact, current limiting, but may not be marked "current limiting." Article 240-60b of the National Electrical Code® (NEC®) (NFPA 70-1999) prohibits fuse clips for current-limiting fuses from accepting noncurrent-limiting fuses. (See Figure 5-1.)

5.2.6 delay: A term usually applied to the opening time of a fuse when in excess of 1 cycle, where the time may vary considerably between types and manufacturers and still be within established standards. This word, in itself, has no specific meaning other than in manufacturers' claims unless published standards specify delay characteristics. *See:* **time delay**.

Copyright © 2001 IEEE. All rights reserved.

--`,,`-`-`,,`,,`,`,,`---

Copyright The Institute of Electrical and Electronics Engineers, Inc.
Provided by IHS under license with IEEE
No reproduction or networking permitted without license from IHS
Not for Resale

5.2.7 dual-element fuse: A cartridge fuse having two or more current-responsive elements of different fusing characteristics in series in a single cartridge. The dual-element design is a construction technique frequently used to obtain a desired time-delay response characteristic. Labeling a fuse as dual-element means this fuse meets Underwriters Laboratories (UL) time-delay requirements (i.e., can carry five times rated current for a minimum of 10 s for Class J, Class H, Class K, and Class R, except for the 0 A to 30 A, 250 V case size Class H, Class K, and Class R fuses, where minimum opening time can be reduced to 8 s for five times the rated current).

5.2.8 ferrule: The cylindrical-shaped fuse terminal that also encloses the end of the fuse. In low-voltage fuses, the design is only used in fuses rated up to and including 60 A. The ferrule may be made of brass or copper and may be plated with various materials.

5.2.9 fuse-link: [British Standards Association (BSA) terminology] A complete enclosed cartridge fuse. The addition of a carrier, or holder, completes the fuse. [In the United States] A replaceable part or assembly that comprises entirely or principally the conducting element and is required to be replaced after each circuit interruption to restore the fuse to operating conditions. *See:* **link**.

5.2.10 high rupturing capacity (HRC): [British Standards Association (BSA) and Canadian Standards Association (CSA) terminology] A term equivalent to National Electrical Manufacturers Association (NEMA) high interrupting rating and generally indicating capability of interruption of at least 100 000 A root-mean-square (rms) for low-voltage fuses.

5.2.11 I^2t (ampere-squared seconds): A factor of heat energy developed within a circuit during the fuse's melting or arcing. The sum of melting and arcing I^2t is generally stated as total clearing I^2t. Actual energy is I^2rt, but r (resistance) is assumed as a constant for comparison (see Figure 5-2).

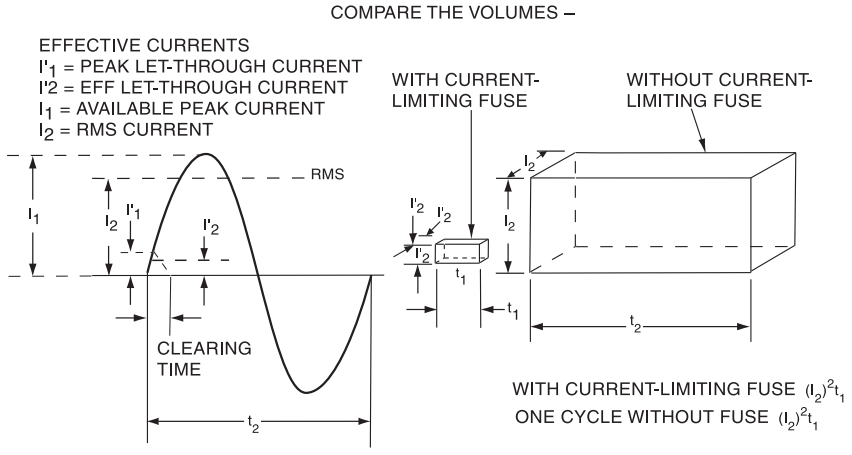

Figure 5-2—Graphic representation of I^2t

Copyright © 2001 IEEE. All rights reserved.

Copyright The Institute of Electrical and Electronics Engineers, Inc.
Provided by IHS under license with IEEE
No reproduction or networking permitted without license from IHS
Not for Resale

5.2.12 interrupting rating: The rating based upon the highest root-mean-square (rms) ac or dc current that the fuse is tested to interrupt under the conditions specified. The interrupting rating, in itself, has no direct bearing on any current-limiting effect of the fuse.

5.2.13 link: The current-responsive element in a fuse that is designed to melt under overcurrent conditions and interrupt the circuit. A renewal link is one intended for use in Class H low-voltage renewable fuses.

5.2.14 melting time: The time required to melt the current-responsive element on a specified overcurrent. Where the fuse is current limiting, the melting time may be approximately half or less of the total clearing time. (Sometimes referred to as pre-arcing time.) (See Figure 5-1.)

5.2.15 NEC® dimensions: Dimensions once stated in the National Electrical Code® (NEC®) (NFPA 70-1999), but now found in Underwriters Laboratories (UL) and Canadian Standards Association (CSA) standards. These dimensions are common to Class H and Class K fuses and provide interchangeability between manufacturers for fuses and fusible equipment of a given ampere and voltage range.

5.2.16 one-time fuse: Strictly speaking, any nonrenewable fuse, but generally accepted and used to describe any Class H or Class K nonrenewable cartridge fuse, with a single (as opposed to dual) fusing element.

5.2.17 overload: An overcurrent, or more current than normal, that stays in the normal current path.

5.2.18 peak let-through current (I_P): The maximum instantaneous current through a current-limiting fuse during the total clearing time. Because this value is instantaneous, it exceeds the root-mean-square (rms) available current, but is less than the peak current available without a fuse in the circuit if the fault level is high enough for it to operate in its current-limiting mode. (See Figure 5-1.)

5.2.19 plug fuses: Fuses that are rated 125 V and available with current ratings up to 30 A. Their use is limited to circuits rated 125 V or less. However, they may also be used in circuits supplied from a system having a grounded neutral and in which no conductor operates at more than 150 V to ground. The National Electrical Code® (NEC®) (NFPA 70-1999) requires Type S fuses in all new installations of plug fuses because they are tamper resistant and size limiting and thus make overfusing difficult.

5.2.20 pre-arcing time: *See:* **melting time**.

5.2.21 renewable fuse: A fuse in which the element, usually a zinc link, may be replaced after the fuse has opened. Once a popular item, this fuse is gradually losing popularity due to the possibility of using higher ampere-rated links or multiple links in the field.

5.2.22 selectivity: A general term describing the interrelated performance of protective devices. Complete selectivity is obtained when a minimum amount of equipment is removed from service for isolation of a fault or other abnormality.

Copyright © 2001 IEEE. All rights reserved.

Copyright The Institute of Electrical and Electronics Engineers, Inc.
Provided by IHS under license with IEEE
No reproduction or networking permitted without license from IHS Not for Resale

5.2.23 short-circuit current: An overcurrent, or more current than normal, that goes outside the normal current path when it is shunted around the load. *See:* **overload**.

5.2.24 threshold current: The magnitude of current at which a fuse becomes current limiting, specifically, the symmetrical root-mean-square (rms) available current at the threshold of the current-limiting range, where the fuse total clearing time is less than 0.5 cycle at rated voltage and rated frequency, for a symmetrical closing, at a power factor of less than 20%. The threshold ratio is simply the ratio of the threshold current to the fuse's continuous-current rating.

5.2.25 time delay: A term now used by National Electrical Manufacturers Association (NEMA), American National Standards Institute (ANSI), Underwriters Laboratories (UL), and Canadian Standards Association (CSA) to mean, in Class H, Class K, Class J, and Class R cartridge fuses, a minimum opening time of 10 s on an overload current five times the ampere rating of the fuse, except for Class H, Class K, and Class R, 0 A to 30 A, 250 V case size where the minimum opening time can be reduced to 8 s for five times the rated current. Such time-delay is particularly useful in allowing the fuse to pass the momentary starting overcurrent of a motor, yet not hindering the opening of the fuse should the overload persist. In Class G, Class CC, and plug fuses, the phrase *time-delay* requires a minimum opening time of 12 s on an overload of twice the fuse's ampere rating. The time-delay characteristic does not affect the fuse's short-circuit current clearing ability. Time-delay is in contrast with the term *nontime-delay* or *fast-acting* as applied to other fuse types.

5.2.26 total clearing time: The total time between the beginning of the specified overcurrent and the final interruption of the circuit, at rated voltage. It is the sum of the minimum melting time plus tolerance and the arcing time. For clearing times in excess of 0.5 cycle, the clearing time is substantially the maximum melting time for low-voltage fuses. (See Figure 5-1.)

5.2.27 tube: The cylindrical enclosure of a fuse. It may be made of laminated paper, special fiber, melamine impregnated glass cloth, bakelite, ceramic, glass, plastic, or other materials.

5.2.28 voltage rating: The root-mean-square (rms) ac (or the dc) voltage at which the fuse is designed to operate. All low-voltage fuses function on any lower voltage, but use on higher voltages than rated is hazardous. For high short-circuit currents, increasing the voltage increases the arcing and clearing times and the clearing I^2t values.

5.3 Documentation

The various electrical industry standards about fuses are highlighted in this clause. Each is available from its source and should be studied for detailed requirements.

5.3.1 Standards from Underwriters Laboratories (UL) and Canadian Standards Association (CSA)

UL 248-1-2000 and CSA C22.2 No. 248.1-2000 provide general requirements for low-voltage fuses (1000 V or less). Subsequent, detailed parts, along with the general

Copyright © 2001 IEEE. All rights reserved.

Copyright The Institute of Electrical and Electronics Engineers, Inc.
Provided by IHS under license with IEEE
No reproduction or networking permitted without license from IHS
Not for Resale

requirements, are described in 5.3.1.1 through 5.3.1.8. Figure 5-3 shows the classification of low-voltage fuses covered by the standards.

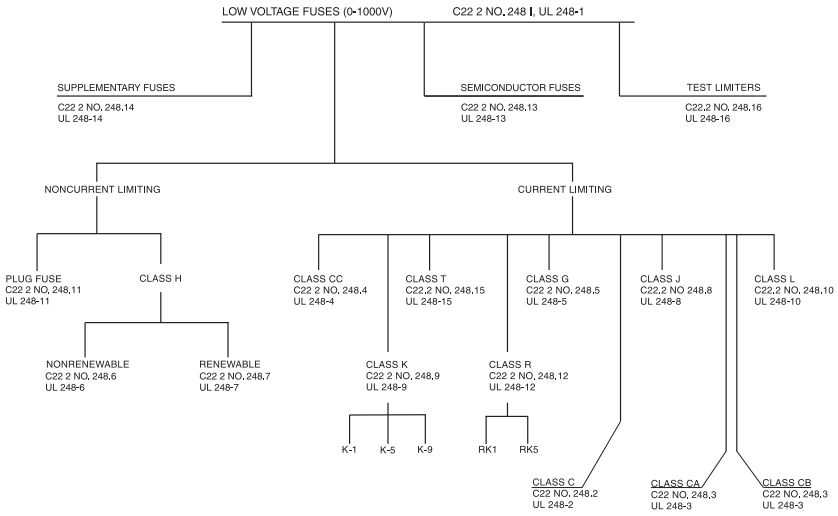

Figure 5-3—Low-voltage fuses covered by UL and CSA

5.3.1.1 Class H fuses

UL 248-6-2000 and CSA C22.2 No. 248.6-2000 cover nonrenewable Class H fuses. UL 248-7-2000 and CSA C22.2 No. 248.7-2000 cover standard renewable Class H fuses. These fuses are rated 250 V or 600 V, 600 A or less, and are in accordance with the National Electrical Code® (NEC®) (NFPA 70-1999). These fuses are not recognized as being current limiting. They shall not bear a marking that states or implies that they are current limiting. Neither a fuse nor its carton may be marked “direct current” or “dc” unless found suitable for use on both ac and dc. (See 5.3.1.8.) Fuses marked “time-delay,” “D,” “dual element,” or any phrase of similar significance should not open in less than 10 s at five times their rating, except for the 250 V, 30 A case size, which has a minimum 8 s opening time at five times their rating.

The principal requirements are dimension, design, construction, performance, and markings. Under performance, the fuses are tested for the following:

a) Continuous-current-carrying ability and temperature rise.
b) Overload operation within prescribed maximum times at 135% and 200% of the fuse’s continuous-current rating.
c) Time-delay test (optional) for a minimum opening time of 10 s at five times the continuous-current rating, except for fuses of 0 A to 30 A, 250 V, minimum clearing time may be reduced to 8 s at 500%. A fuse may be labeled “time delay,” “dual element,” etc. only if it passes this test.
d) Short-circuit interrupting capability at 10 000 A root mean square (rms) (ac). DC testing is optional.

Copyright © 2001 IEEE. All rights reserved.

--`,-`-`,,`,,`,`,,`---

Copyright The Institute of Electrical and Electronics Engineers, Inc.
Provided by IHS under license with IEEE
No reproduction or networking permitted without license from IHS
Not for Resale

5.3.1.2 Class G, Class J, Class L, Class CC, Class C, Class CA, and Class CB

The following standards cover the indicated fuses:

Fuse class	Standard
G	UL 248-5-2000 and CSA C22.2 No. 248.5-2000
J	UL 248-8-2000 and CSA C22.2 No. 248.8-2000
L	UL 248-10-2000 and CSA C22.2 No. 248.10-2000
CC	UL 248-4-2000 and CSA C22.2 No. 248.4-2000
C	UL 248-2-2000 and CSA C22.2 No. 248.2-2000
CA and CB	UL 248-3-2000 and CSA C22.2 No. 248.3-2000

These requirements cover nonrenewable cartridge fuses that limit the peak let-through current and the total I^2t and that exhibit current-limiting characteristics above specified values of current. These fuses have different dimensional characteristics than Class H and Class K fuses to meet noninterchangeability requirements of current-limiting fuses. (See NEC Article 240-60b and Figure 5-2.)

Class G fuses have an ac rating to interrupt 100 000 A rms. They are labeled as "current-limiting," have an ac rating of 480 V (25–60 A) and 6000 V (0–20A), and may have an additional optional dc rating up to 480 V. Their dimensions are not interchangeable with other classes of fuses. Class G fuses may be either fast-acting or time-delay. Class G fuses are available up through 60 A in four different body sizes (0–15 A, 20 A, 25 and 30 A, and 35–60 A).

Class J fuses have an ac rating to interrupt 200 000 A rms. They are labeled as "current-limiting," have an ac rating of 600 V, and may have an additional optional dc rating up to 600 V. Their dimensions are not interchangeable with other classes of fuses. Class J fuses may be either fast-acting or time-delay. Class J fuses that have a time delay of at least 10 s at five times rated current may have "time delay" or the equivalent written on the label.

Class L fuses have ratings in the range of 601 A to 6000 A, have an ac rating to interrupt 200 000 A, have an ac rating of 600 V, and have specified dimensions larger than those of other fuses rated 600 V (or less). They are intended to be bolted to bus bars and are not used in clips. UL has no definition of time delay for Class L fuses; however, many Class L fuses have substantial overload time-current carrying capability. Class L fuse standards do not include 250 V ratings.

Class CC fuses have an ac rating to interrupt 200 000 A rms. They are labeled as "current-limiting," have an ac rating of 600 V, and may have an additional optional dc rating up to 600 V. Rejection features in fuse clips for Class CC fuses reject all but Class CC fuses. They

Copyright © 2001 IEEE. All rights reserved.

Copyright The Institute of Electrical and Electronics Engineers, Inc.
Provided by IHS under license with IEEE
No reproduction or networking permitted without license from IHS
Not for Resale

may be either fast-acting or time-delay. Class CC fuses are available up through 30 A in one case size.

Class C fuses have an ac rating to interrupt 200 000 A rms. They may be marked "current-limiting" if they pass a threshold current test. Class C fuses have an ac rating of 600 V and may have an additional optional dc rating up to 600 V. Class C fuses are available up through 1200 A in four case sizes (0–100 A, 101–200 A, 201–800 A, and 801–1200 A).

Class CA and Class CB fuses have an ac rating to interrupt 200 000 A rms. They are labeled as "current-limiting," have an ac rating of 600 V, and may have an additional optional dc rating up to 600 V. Class CA fuses are available up through 30 A and have mounting holes in their end blades. Class CB fuses are available up through 60 A, without mounting holes in their end blades. Class CB fuses have two body sizes (0–30 A and 35–60 A).

5.3.1.3 Class K

UL 248-9-2000 and CSA C22.2 No. 248.9-2000 cover fuses made in the same dimensions as Class H fuses, but which have an ac rating to interrupt 50 000 A, 100 000 A, or 200 000 A rms. Class K fuses have prescribed values of peak let-through current and I^2t for each case size (0–30 A, 31–60 A, 61–100 A, 101–200 A, 201–400 A, and 401–600 A). Because they have no required threshold ratio and are interchangeable with Class H fuses, they are not labeled as current limiting. See NEC Article 240-60(b). They are rated up to 600 A in both 250 V and 600 V sizes. Class K fuses are tested for continuous-current-carrying ability, temperature rise, overload opening, and an optional time-delay test of 10 s (8 s for 250 V, 30 A case size) at five times the current rating in order to be labeled as "time delay," "dual element," etc. They are also tested at various short-circuit levels up to their maximum interrupting rating and for compliance with prescribed maximum values of peak let-through current and I^2t for each of the three divisions: K-1, K-5, and K-9 . K-1 fuses are required to have the lowest I^2t and I_P let-through values. K-5 fuses are allowed to have higher values, and K-9 fuses have the highest I^2t and I_P limits. They are labeled for the class subdivision, interrupting rating, amperes, and maximum voltage.

NOTE—Any one manufacturer may produce two or three Class K-5 fuses with different interrupting ratings or with the same interrupting rating and differing peak let-through and I^2t values distinguished by catalog numbers, but all within the requirements of that class.

5.3.1.4 Class R

UL 248-12-2000 and CSA C22.2 No. 248.12-2000 cover Class R fuses. They have ac ratings to interrupt 200 000 A. The standard has prescribed values for maximum peak let-through currents, I^2t and threshold current, with subclass RK-1 having the lowest (or most restrictive) values as compared to subclass RK-5. Fuseholders designed to accept Class R fuses do not accept Class H or Class K fuses or any other class. However, Class R fuses do fit into Class H or Class K fuseholders. Class R fuses are available with or without time delay. If marked "time delay" or similarly, they are required to have a minimum opening time of 10 s when subjected to a load of five times rated current, except for the 0 A to 30 A, 250 V case size, where minimum opening time can be reduced to 8 s for five times the rated current.

 Copyright © 2001 IEEE. All rights reserved.

--`,,`-`-`,,`,,`,`,,`---
Copyright The Institute of Electrical and Electronics Engineers, Inc.
Provided by IHS under license with IEEE
No reproduction or networking permitted without license from IHS Not for Resale

5.3.1.5 Plug fuses

UL 248-11-2000 and CSA C22.2 No. 248.11-2000 cover Edison base and Type S base plug fuses, which may or may not be provided with time-delay characteristics. Type S base plug fuses have rejection features that limit the ampere rating of fuses that may be installed in a particular fuseholder.

5.3.1.6 Supplemental fuses

UL 248-14-2000 and CSA C22.2 No. 248.14-2000 cover glass, miniature, micro, and other miscellaneous fuses for supplementary protection. These standards do not pertain to branch circuit fuses.

5.3.1.7 Class T

UL 248-15-2000 and CSA C22.2 No. 248.15-2000 cover Class T current-limiting fuses. These fuses have characteristics similar to Class J fuses, but are dimensionally smaller. They are available in ac ratings up to 1200 A at both 300 V and 600 V. As current-limiting fuses, they are not dimensionally interchangeable with any other class of fuse. Class T fuses have an ac rating to interrupt 200 000 A rms.

5.3.1.8 DC fuses

Optional requirements for dc are found in UL 248-1-2000, CSA C22.2 No. 248.1-2000, and UL 198L-1995. Preferred dc voltage ratings are 60 V, 125 V, 160 V, 250 V, 300 V, 400 V, 500 V, and 600 V. Preferred dc interrupting ratings are 10 000 A, 20 000 A, 50 000 A, 100 000 A, 150 000 A, and 200 000 A. These requirements cover Class C, Class CA, Class CB, Class CC, Class G, Class H, Class J, Class K, Class L, Class R, and Class T fuses. UL 198M-1995 covers requirements for Class K and Class R fuses intended for use in protecting trailing cables in dc circuits in mines. The standard follows the requirements of the US Department of Labor's Mine Safety and Health Administration (MSHA). These fuses have a maximum rating of 600 A, with a voltage rating of 300 V or 600 V. The maximum dc interrupting rating is 20 000 A.

5.3.2 NEMA FU-1-1986

NEMA FU-1-1986 covers low-voltage cartridge fuses with requirements that are similar to the requirements found in the UL and CSA standards given in 5.3.1.

5.3.3 The NEC

NEC articles that apply to fuses include

— 110-9, Interrupting Rating Requirements

— 110-10, Circuit Impedance and Other Characteristics

— 240-02, List of Articles Covering Overcurrent Protection for Specific Equipment

Copyright © 2001 IEEE. All rights reserved.

Copyright The Institute of Electrical and Electronics Engineers, Inc.
Provided by IHS under license with IEEE
No reproduction or networking permitted without license from IHS
Not for Resale

— 240-6, Standard Ampere Ratings

— 240-11, Definition of Current-Limiting Protective Device

— 240-50, Plug Fuses, Fuseholders, and Adapters

— 240-51, Edison Base Fuses

— 240-53, Type S Fuses

— 240-54, Types S Fuses, Adapters, and Fuseholders

— 240-60b, Noninterchangeability

— 240-60c, Marking on Fuses

— 240-61, Fuse Classification

5.4 Standard dimensions

UL and CSA have established the dimensional requirements for the various classifications of low-voltage fuses. Figure 5-4 through Figure 5-10 show typical dimensions (see fuse manufacturer's data for actual dimensions) for Class H, Class K, Class L, Class G, Class J, Class T, Class CC, and Class R fuses.

Copyright © 2001 IEEE. All rights reserved.

Copyright The Institute of Electrical and Electronics Engineers, Inc.
Provided by IHS under license with IEEE
No reproduction or networking permitted without license from IHS Not for Resale

FERRULE-TYPE CARTRIDGE FUSE – 0-60 A

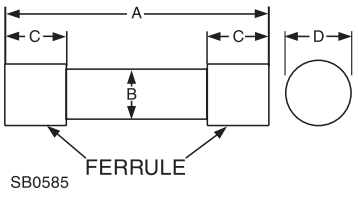

KNIFE-BLADE TYPE CARTRIDGE FUSE – 61-600 A

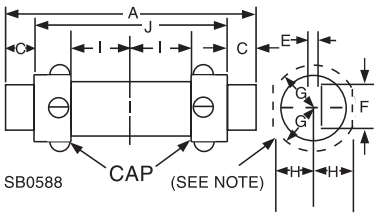

NOTE—The dashed line represents the limit of the maximum projection of a screw, rivet head, or the like. It becomes a circle for a fuse rated more than 200

A.DIMENSIONS OF KNIFE-BLADE TYPE FUSES IN INCHES (mm)

Rating		Overall Length of Fuse[a]	Maximum Outside Diameter of Tube	Minimum Length of Ferrule or Blade	Outside Diameter of Ferrule[b]	Thickness of Blade[c]	Width of Blade[d]	Maximum Dimensions Over Projections[e]		Minimum Distance From Midpoint of Fuse to Nearest Live Part	Minimum Overall Length of Cylindrical Body[f]
								Measured Parallel to Blade	Measured at Right Angles to Blade		
Volts	Amperes	A	B	C	D	E	F	G	H	I	J
250	0–30	2.00 (50.8)	0.53 (13.5)	0.50 (12.7)	0.562 (14.27)						
	31–60	3.00 (76.2)	0.78 (19.8)	0.625 (15.9)	0.812 (20.62)						
	61–100	5.87 (149.2)		1.00 (25.4)		0.125 (3.18)	0.750 (19.05)	0.66 (16.7)	0.59 (15.1)	1.03 (26.2)	
	101–200	7.12 (181.0)		1.37 (34.9)		0.188 (4.78)	1.125 (28.58)	0.94 (23.8)	0.84 (21.4)	1.19 (30.2)	4.12 (104.8)
	201–400	8.62 (291.1)		1.87 (47.6)		0.250 (6.35)	1.625 (41.28)	1.20 (30.6)	1.20 (30.6)	1.19 (30.2)	4.62 (117.5)
	401–600	10.37 (263.5)		2.25 (57.1)		0.250 (6.35)	2.000 (50.80)	1.45 (36.9)	1.45 (36.9)	1.53 (38.9)	5.19 (131.8)
600	0–30	5.00 (127.0)	0.78 (19.8)	0.50 (12.7)	0.812 (20.62)						
	31–60	5.50 (139.7)	1.03 (26.2)	0.62 (15.9)	1.062 (26.97)						
	61–100	7.87 (200.0)		1.00 (25.4)		0.125 (3.18)	0.750 (19.05)	0.78 (19.8)	0.72 (18.3)	1.75 (44.4)	
	101–200	9.62 (244.5)		1.37 (34.9)		0.188 (4.78)	1.125 (28.58)	1.06 (27.0)	0.98 (25.0)	2.25 (57.1)	6.12 (155.6)
	201–400	11.62 (295.3)		1.87 (47.6)		0.250 (6.35)	1.625 (41.28)	1.45 (36.9)	1.45 (36.9)	2.50 (63.5)	7.12 (181.0)
	401–600	13.37 (339.7)		2.25 (57.1)		0.250 (6.35)	2.000 (5.08)	1.72 (43.7)	1.72 (43.7)	2.69 (68.3)	8.18 (208.0)

[a]Tolerances: 0–60 A, ±0.03 in (±0.8 mm); 61–200 A, ±0.06 in (±1.6 mm); 201–600 A, ±0.09 in (±2.4 mm).

[b]Column D tolerance: ±0.020 in (±0.020 mm).

[c]Column E tolerance: ±0.003 in (±0.08 mm).

[d]Column F tolerance: ±0.035 in (±0.89 mm).

[e]The maximum overall dimension of a screw ring for a renewable fuse, the position of which with respect to the position of the knife blad cannot be predetermined, shall be no more than the value specified for dimension H.

[f] The length of the cylindrical body may be less than the indicated value if other acceptable interference means, pins through the blades collars, and the like, are provided to prevent mounting the fuse in a fuseholder that will accommodate a fuse rated in the next lower bracke of current ratings.

Figure 5-4—Class H and Class K dimensions

Copyright © 2001 IEEE. All rights reserved.

Copyright The Institute of Electrical and Electronics Engineers, Inc.
Provided by IHS under license with IEEE
No reproduction or networking permitted without license from IHS

Not for Resale

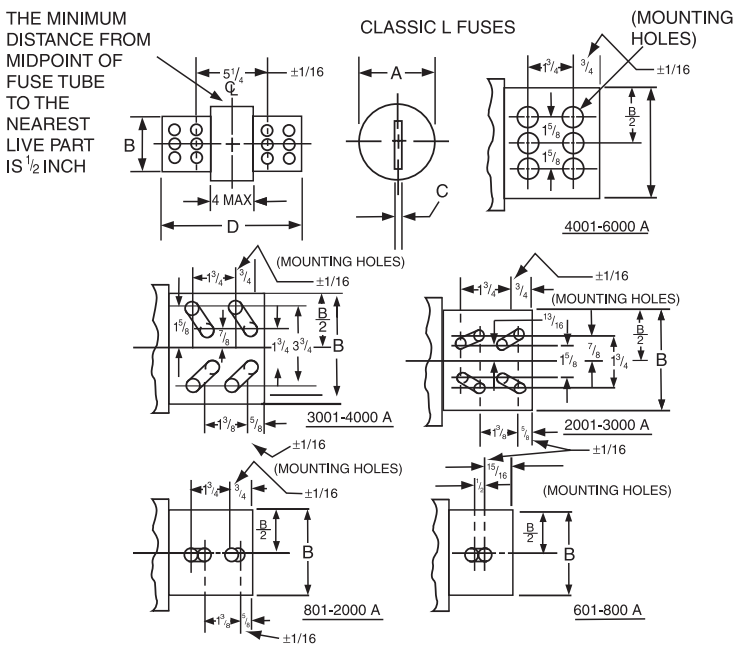

ALL DIMENSIONS ARE IN INCHES
ALL TOLERANCES ARE ±1/64 INCH UNLESS OTHERWISE NOTED
5/8 ± 1/32 INCH SLOTS OR HOLES MAY BE USED. SHADED HOLES INDICATE DRILLING REQUIRED FOR CLASS "L" FUSE MOUNTING.

Inches	1/64	1/32	1/16	1/2	5/8	3/4	13/16	7/8	15/16	1 3/8	1 5/8	1 3/4	3 1/4	4	5 3/4
mm	0.4	0.8	1.6	12.7	15.9	19.0	20.6	22.2	23.8	34.9	41.3	44.4	82.6	101.6	146.0

DIMENSIONS OF CLASS L FUSES IN INCHES (mm)[a]

Cartridge Size in Amperes	Maximum Diameter A	Width of Blades B	Thickness of Blades C	Overall Length D
601–800	2.53 (64.3)	2.0 (50.8)	0.375 (9.5)	8.63 (219.1)
801–1200	2.78 (70.6)	2.0 (50.8)	0.375 (9.5)	10.75 (273.0)
1201–1600	3.03 (77.0)	2.38 (60.3)	0.44 (11.1)	10.75 (273.0)
1601–2000	3.53 (89.7)	2.75 (69.8)	0.50 (12.7)	10.75 (273.0)
2001–2500	5.03 (127.8)	3.50 (88.9)	0.75 (19.0)	10.75 (273.0)
2501–3000	5.03 (127.8)	4.0 (101.6)	0.75 (19.0)	10.75 (273.0)
3001–4000	5.78 (146.8)	4.75 (120.6)	0.75 (19.0)	10.75 (273.0)
4001–5000	7.16 (181.8)	5.25 (133.4)	1.0 (25.4)	10.75 (273.0)
5001–6000	7.16 (181.8)	5.75 (146.0)	1.0 (25.4)	10.75 (273.0)

[a]Tolerances: B, ±0.06 in (±1.6 mm); C, ±0.03 in (±0.8 mm); D, ±0.09 in (±2.4 mm).

Figure 5-5—Class L fuse dimensions

Copyright © 2001 IEEE. All rights reserved.

Copyright The Institute of Electrical and Electronics Engineers, Inc.
Provided by IHS under license with IEEE
No reproduction or networking permitted without license from IHS
Not for Resale

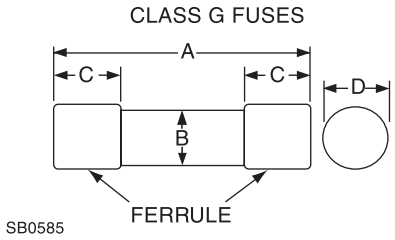

DIMENSIONS OF CLASS G FUSES IN INCHES (mm)[a]

Rating		Overall Length of Fuse	Maximum Outside Diameter of Tube	Minimum Length of Ferrule	Outside Diameter of Ferrule
Volts	Amperes	A	B	C	D
300	0–15	1.31 (33.3)	0.38 (9.5)	0.28 (7.1)	0.406 (10.31)
300	16–20	1.41 (35.7)	0.38 (9.5)	0.28 (7.1)	0.406 (10.31)
300	21–30	1.62 (41.3)	0.38 (9.5)	0.28 (7.1)	0.406 (10.31)
300	31–60	2.25 (57.1)	0.38 (9.5)	0.50 (12.7)	0.406 (10.31)

[a]Tolerances: A, ±0.03 in (±0.8 mm); D, ±0.006 in (±0.15 mm).

Figure 5-6—Class G fuse dimensions

Copyright © 2001 IEEE. All rights reserved.

Copyright The Institute of Electrical and Electronics Engineers, Inc.
Provided by IHS under license with IEEE
No reproduction or networking permitted without license from IHS
Not for Resale

FERRULE-TYPE CLASS J FUSES —
0-60 AMPERES

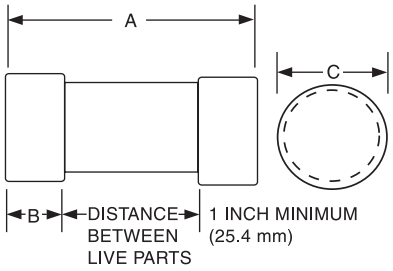

DIMENSIONS OF FERRULE-TYPE CLASS J FUSES IN INCHES (mm)[2]

Cartridge Size in Amperes	Overall Length	Minimum Length of Ferrule	Outside Diameter of Ferrule
	A	B	C
0–30	2.25 (57.1)	0.50 (12.7)	0.812 (20.62)
31–60	2.37 (60.3)	0.63 (15.9)	1.062 (26.97)

[a]Tolerances: A, ±0.03 in (±0.8 mm); C, ±0.008 in (±0.20 mm).

KNIFE-BLADE TYPE CLASS J FUSES—61–600 AMPERES

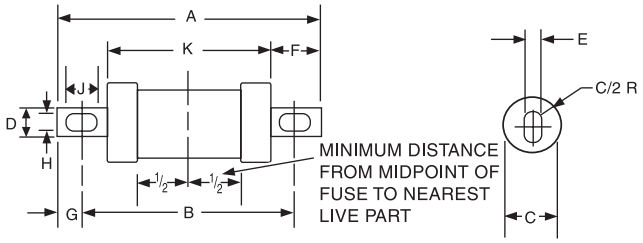

DIMENSIONS OF KNIFE-BLADE TYPE CLASS J FUSES IN INCHES (mm)[a]

Cartridge Size in Amperes	Overall Length	Distance Between Centers of Slot	Maximum Diameter[b]	Width of Blades	Thickness of Blades	Length of Blades	Distance From End of Blade to Center of Slot	Width of Slot	Length of Slot	Length of Tube
	A	B	C	D	E	F	G	H	J	K
61–100	4.62 (117.5)	3.62 (92.1)	1.13 (28.6)	0.750 (19.05)	0.125 (3.18)	1.00 (25.4)	0.50 (12.7)	0.281 (7.14)	0.375 (9.52)	2.62 (66.7)
101–200	5.75 (146.0)	4.38 (111.1)	1.63 (41.3)	1.125 (28.58)	0.188 (4.78)	1.37 (34.9)	0.69 (17.5)	0.281 (7.14)	0.375 (9.52)	3.00 (76.2)
201–400	7.12 (181.0)	5.25 (133.4)	2.13 (54.0)	1.625 (41.28)	0.250 (6.35)	1.87 (47.6)	0.94 (23.8)	0.406 (10.32)	0.531 (13.49)	3.37 (85.7)
401–600	8.00 (203.2)	6.00 (152.4)	2.63 (66.7)	2.000 (50.80)	0.375 (9.52)	2.12 (54.0)	1.00 (25.4)	0.531 (13.49)	0.688 (17.48)	3.75 (95.2)

Tolerances: A, ±0.09 in (±2.4 mm); B, ±0.06 in (±1.6 mm); D, ±0.035 in (±0.89 mm); E, ±0.003 in (±0.08 mm); F, ±0.03 in (±0.8 mm); G, ±0.03 in (±0.8 mm); H, ±0.005 in (±0.13 mm); J, plus 0.062, minus 0.000 in (plus 1.57 mm, minus 0.00 mm); K, ±0.03 in (±0.08 mm).

C/2 includes maximum dimension over projection.

Figure 5-7—Class J fuse dimensions

Copyright © 2001 IEEE. All rights reserved.

Copyright The Institute of Electrical and Electronics Engineers, Inc.
Provided by IHS under license with IEEE
No reproduction or networking permitted without license from IHS
Not for Resale

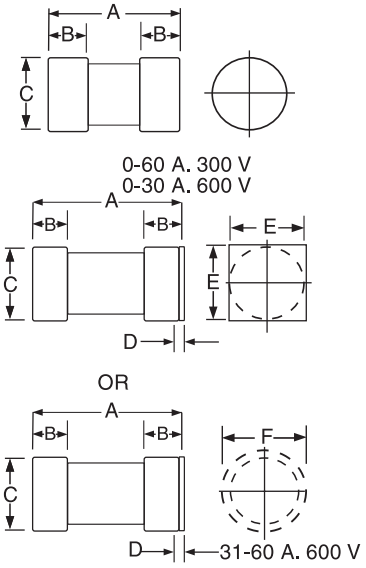

DIMENSIONS OF FERRULE-TYPE FUSES IN INCHES (mm)

Rating		Overall Length of Fuse[a]	Length of Ferrule[b]	Outside Diameter of Ferrule[c]	Thickness of Rejection Feature[d]	Width of Rejection Feature[d,e]	Diameter of Rejection Feature[e,f]
Volts	Amperes	A	B	C	D	E	F
300	0–30	0.880 (22.35)	0.280 (7.11)	0.406 (10.31)	—	—	—
	31–60	0.880 (22.35)	0.280 (7.11)	0.563 (14.30)	—	—	—
600	0–30	1.500 (38.10)	0.280 (7.11)	0.563 (14.30)	—	—	—
	31–60	1.560 (39.62)	0.410 (10.41)	0.812 (20.62)	0.062 (1.57)	0.812 (20.62)	0.994 (25.25)

[a]Tolerances: 0–60 A, 300 V, ±0.020 in (±0.51 mm); 0–60 A, 600 V, ±0.40 in (±1.02 mm).
[b]Column B tolerance: ±0.020 in (±0.51 mm).
[c]Column C tolerance: ±0.006 in (±0.15 mm). Diameter of tube is less than ferrules.
[d]Columns D and E tolerance: ±0.006 in (±0.15 mm).
[e]Rejection feature may be either square or round.
[f]Column F tolerance: minus 0.006 in plus 0.016 in (minus 0.15 mm plus 0.41 mm).

KNIFE-BLADE TYPE FUSES

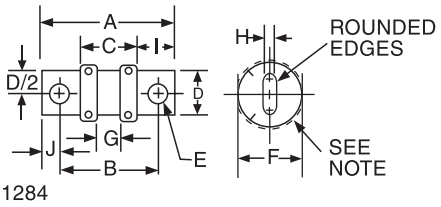

SB 1284

DIMENSIONS OF KNIFE-BLADE TYPE FUSES IN INCHES (mm)

Rating		Overall Length of Fuse[a]	Distance Between Mounting Centers[b]	Maximum Length of Body	Width of Blade[c]	Diameter of Mounting Holes[d]	Maximum Diameter of Fuse	Minimum Length of Insulated Body	Thickness of Blade[e]	Minimum Length of Blade	Distance of Mounting Holes from End[c]
Volts	Amperes	A	B	C	D	E	F	G	H	I	J
300	61–100	2.156 (54.76)	1.556 (39.52)	0.850 (21.59)	0.750 (19.05)	0.281 (7.14)	0.828 (21.03)	0.250 (6.35)	0.125 (3.18)	0.646 (16.41)	0.300 (7.62)
	101–200	2.438 (61.93)	1.895 (43.05)	0.850 (21.59)	0.875 (22.22)	0.344 (8.74)	1.078 (27.38)	0.250 (6.35)	0.188 (4.78)	0.787 (19.99)	0.372 (9.45)
	201–400	2.750 (69.85)	1.844 (46.84)	0.860 (21.84)	1.000 (25.40)	0.406 (10.31)	1.344 (34.14)	0.250 (6.35)	0.250 (6.35)	0.926 (23.52)	0.453 (11.51)
	401–600	3.063 (77.80)	2.031 (51.59)	0.880 (22.35)	1.250 (31.75)	0.484 (12.29)	1.625 (41.28)	0.250 (6.35)	0.312 (7.92)	1.074 (27.28)	0.516 (13.11)
	601–800	3.375 (85.73)	2.219 (56.36)	0.891 (22.63)	1.750 (44.45)	0.547 (13.89)	2.078 (52.78)	0.250 (6.35)	0.375 (9.53)	1.222 (31.04)	0.578 (14.68)
	801–1200	4.000 (101.6)	2.531 (64.29)	1.078 (27.38)	2.000 (50.8)	0.609 (15.48)	2.516 (63.90)	0.250 (6.35)	0.438 (11.11)	1.441 (36.60)	0.735 (18.67)
600	61–100	2.953 (75.01)	2.352 (59.74)	1.640 (41.66)	0.750 (19.05)	0.281 (7.14)	0.828 (21.03)	0.500 (12.70)	0.125 (3.18)	0.646 (16.41)	0.300 (7.62)
	101–200	3.250 (82.55)	2.507 (63.67)	1.660 (42.16)	0.875 (22.22)	0.344 (8.74)	1.078 (27.38)	0.500 (12.70)	0.188 (4.78)	0.787 (19.99)	0.372 (9.45)
	201–400	3.625 (92.08)	2.719 (69.06)	1.730 (43.94)	1.000 (25.40)	0.406 (10.31)	1.625 (41.28)	0.500 (12.70)	0.250 (6.35)	0.926 (23.52)	0.453 (11.51)
	401–600	3.984 (101.19)	2.953 (75.01)	1.780 (45.21)	1.250 (31.75)	0.484 (12.29)	2.094 (53.19)	0.500 (12.70)	0.312 (7.92)	1.074 (27.28)	0.516 (13.11)
	601–800	4.328 (109.93)	3.172 (80.57)	1.875 (47.63)	1.750 (44.45)	0.547 (13.89)	2.516 (63.91)	0.500 (12.70)	0.375 (9.53)	1.207 (30.66)	0.578 (14.68)

[a]Tolerances: 61–200 A, 300 V, ±0.020 in (±0.51 mm); 201–1200 A, 300 V and 61–800 A, 600 V, ±0.40 in (±1.02 mm).
[b]Column B tolerance: ±0.015 in (±0.38 mm).
[c]Columns D and J tolerance: ±0.020 in (±0.51 mm), except J tolerance ±0.028 in (±0.71 mm) for 801–1200 A, 300 V.
[d]Tolerances: minus 0.000 in (minus 0.00 mm); 61–100 A, plus 0.005 in (plus 0.13 mm); 101–200 A, plus 0.006 in (plus 0.15 mm); 201–400 A, plus 0.007 in (plus 0.18 mm); 401–1200 A, plus 0.008 in (plus 0.20 mm).
[e]Column H tolerance: ±0.006 in (±0.15 mm).

Figure 5-8—Class T fuse dimensions

Copyright © 2001 IEEE. All rights reserved.

Copyright The Institute of Electrical and Electronics Engineers, Inc.
Provided by IHS under license with IEEE
No reproduction or networking permitted without license from IHS

Not for Resale

CLASS CC FUSE

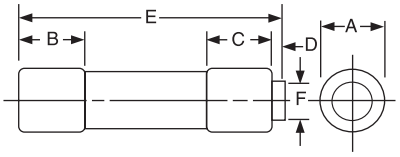

DIMENSIONS OF CLASS CC FUSES IN INCHES (mm)

Rating		Ferrule Diameter[a]	Ferrule Length[a]	Ferrule Length[a]	Rejection Length[a]	Overall Length[b]	Rejection Diameter[a]
Volts	Amperes	A	B	C	D	E	F
600	0–30	0.405 (10.29)	0.375 (9.53)	0.375 (9.53)	0.125 (3.18)	1.500 (38.10)	0.250 (6.35)

[a]Tolerance: ±0.005 in (±0.13 mm).

[b]Tolerance: ±0.31 in (±0.79 mm).

Figure 5-9—Class CC fuse dimensions

Copyright © 2001 IEEE. All rights reserved.

--`,,-`-`,,`,,`,`,,`---

Copyright The Institute of Electrical and Electronics Engineers, Inc.
Provided by IHS under license with IEEE
No reproduction or networking permitted without license from IHS
Not for Resale

CLASS R FUSES
FERRULE TYPE 0-60 A

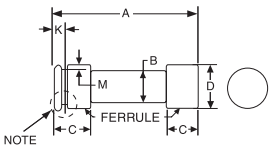

CLASS R FUSES — FERRULE TYPE REJECTION GROOVE DETAILS

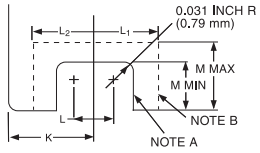

KNIFE-BLADE TYPE CARTRIDGE FUSE – 61-600 A

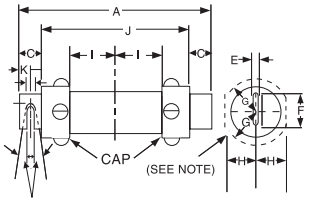

NOTE A — SOLID LINE INDICATES LOCATION, SHAPE AND DIMENSIONS FOR MINIMUM REJECTION GROOVE.

NOTE B — DASHED LINE INDICATES LOCATION, SHAPE AND DIMENSIONS FOR MAXIMUM REJECTION GROOVE

DIMENSIONS OF BLADE-TYPE CLASS R FUSES IN INCHES (MM)

Rating		Overall length of fuse[a]	Minimum length of blade[b]	Thickness of blade[c]	Width of blade[d]	Maximum dimensions over projections		Minimum distance from midpoint of fuse to nearest live part	Minimum maximum overall length of cylindrical body[e]	Distance of rejection feature from end[f]	Width of rejection feature[g]	Web width of blade at rejection feature[h]
Volts	Amperes					Measured parallel to blade	Measured at right angles to blade					
		A	C	E	F	G	H	I	J	K	L	N
250	61–100	5.875 (149.22)	1.000 (25.40)	0.125 (3.18	0.750 (19.05)	0.656 (16.66)	0.594 (15.09)	1.031 (26.19)	3.376–3.781 (85.72–96.04)	0.500 (12.70)	0.281 (7.14)	0.250 (6.38)
	101–200	7.125 (180.98)	1.375 (34.92)	0.188 (4.78)	1.125 (26.58)	0.938 (26.83)	0.844 (21.44)	1.188 (30.18)	4.125–4.281 (104.78–108.74)	0.688 (17.48)	0.281 (7.14)	0.438 (11.13)
	201–400	8.625 (219.08)	1.875 (47.62)	0.250 (6.35)	1.625 (41.28)	1.203 (30.56)	1.203 (30.56)	1.188 (30.18)	4.625–4.813 (117.48–122.25)	0.938 (22.83)	0.406 (10.31)	0.625 (15.68)
	401–600	10.375 (263.52)	2.250 (57.15)	0.250 (6.35)	2.000 (50.80)	1.453 (36.91)	1.453 (36.91)	1.531 (38.69)	5.188–5.813 (131.78–147.55)	1.125 (28.68)	0.531 (13.49)	0.750 (19.06)
600	61–100	7.875 (200.02)	1.000 (25.40)	0.125 (3.18)	0.750 (19.05)	0.781 (19.84)	0.719 (18.26)	1.750 (44.45)	5.375–5.781 (136.52–146.84)	0.500 (12.70)	0.281 (7.14)	0.250 (6.35)
	101–200	9.625 (244.48)	1.375 (34.92)	0.188 (4.78)	1.125 (28.58)	1.062 (26.97)	0.984 (24.99)	2.250 (57.15)	6.125–6.781 (155.58–172.24)	0.688 (17.48)	0.281 (7.14)	0.438 (11.13)
	201–400	11.625 (295.28)	1.875 (47.62)	0.250 (6.35)	1.625 (41.28)	1.453 (36.91)	1.453 (36.91)	2.500 (63.50)	7.125–7.831 (180.98–198.90)	0.938 (23.83)	0.406 (10.31)	0.625 (15.88)
	401–600	13.375 (339.72)	2.250 (57.15)	0.250 (6.35)	2.000 (50.80)	1.719 (43.66)	1.719 (43.66)	2.688 (68.28)	8.188–8.844 (207.98–224.64)	1.125 (28.58)	0.531 (13.49)	0.750 (19.05)

[a]Tolerances: 61–200 A, ±0.062 in (±1.57 mm); 201–600 A, ±0.094 in (±2.39 mm).
[b]The length of one blade shall not be more than 0.062 in (1.57 mm) longer than the other blade.
[c]Column E tolerance: ±.003 in (0.08 mm).
[d]Column F tolerance: ±0.035 in (0.89 mm).
[e]The length of the cylindrical body may be less than the indicated value if other acceptable interference means (pins through the blades, collars, or the like) are provided to prevent mounting the fuse in a fuseholder that will accomodate a fuse rated in the next lower bracket of current rating.
[f]Column K tolerance: ±0.008 in (±0.20 mm).
[g]Column L tolerance: –0.005, +0.025 in (–0.13, +0.64 mm). Dimension is diameter of slot at semicircle. Maximum rounding of corner at end of slot 0.125 in (3.18 mm) radius.
[h]Column N tolerance: ±0.031 in (±0.79 mm).

Figure 5-10—Class R fuse dimensions

Copyright © 2001 IEEE. All rights reserved.

Copyright The Institute of Electrical and Electronics Engineers, Inc.
Provided by IHS under license with IEEE
No reproduction or networking permitted without license from IHS

Not for Resale

DIMENSIONS OF FERRULE-TYPE CLASS R FUSES IN INCHES (MM)										
Rating		Overall length of fuse[a]	Maximum outside diamter of tube	Minimum length of ferrule	Outside diameter of ferrule[b]	Distance of rejection feature from end[c]	Minimum width of rejection feature[d]	Minimum-maximum depth of rejection feature	Maximum width toward end	Maximum width toward body
Volts	Amperes									
		A	B	C	D	K	L	M	L_2	L_1
250	0–30	2.000 (50.80)	0.531 (13.49)	0.500 (12.70)	0.562 (14.27)	0.156 (3.96)	0.070 (1.78)	0.085–0.130 (2.16–3.30)	0.115 (2.92)	0.150 (3.81)
	31–60	3.000 (72.60)	0.781 (19.84)	0.625 (15.88)	0.812 (20.62)	0.188 (4.78)	0.086 (2.18)	0.085–0.130 (2.16–3.30)	0.123 (3.12)	0.170 (4.32)
600	0–30	5.000 (127.00)	0.781 (19.84)	0.500 (12.70)	0.812 (20.62)	0.188 (4.78)	0.086 (2.18)	0.085–0.130 (2.16–3.30)	0.123 (3.12)	0.170 (4.32)
	31–60	5.500 (139.70)	1.031 (26.19)	0.625 (15.88)	1.062 (26.97)	0.250 (6.35)	0.086 (2.18)	0.085–0.130 (2.16–3.30)	0.154 (3.91)	0.180 (4.57)

[a]Column A tolerance: ±0.031 in (±0.79 mm).
[b]Column D tolerance: ±0.008 in (±0.20 mm). To provide proper contact, the diameter of rejection ferrule end shall be equal to or not more than 0.050 in (1.27 mm) smaller than actual diameter of main contact area for any fuse, and no part of rejection ferrule end shall protrude beyond the diameter of the main part of the ferrule.
[c]Column K tolerance: +0.008, –0.016 in (+0.20, –0.41 mm).
[d]Dimension column L: Distance between centers of 0.031 in (0.79 mm) radius fillets. Shape of rejection groove is not specified but shall be completely within solid and dashed lines regardless of shape.

Figure 5-10—Class R fuse dimensions *(continued)*

5.5 Typical interrupting ratings

Interrupting ratings of low-voltage fuses expressed in rms symmetrical amperes are as follows:

Fuse	Typical interrupting rating (kA)
Class H	10
Class K	50, 100, or 200
Class RK-1 and Class RK-5	200
Class J, Class CC, Class T, and Class L	200
Class G	100
Plug fuses	10

Some fuses that meet the dimensional and performance requirements of Class RK-1, Class J, and Class L fuses have been listed or certified as “special purpose” with interrupting ratings of 300 000 A.

Copyright © 2001 IEEE. All rights reserved.

Copyright The Institute of Electrical and Electronics Engineers, Inc.
Provided by IHS under license with IEEE
No reproduction or networking permitted without license from IHS
Not for Resale

5.6 Achieving selectivity with fuses

5.6.1 Basic considerations

Because the electrical distribution system is the heart of most industrial, commercial, and institutional installations, preventing any unnecessary shutdowns of electrical power is imperative. Such incidents can be avoided by the proper selection of overcurrent protective devices. Selectivity (often referred to as selective coordination) is obtained when a minimum amount of equipment is removed from service for isolation of an overcurrent condition. Figure 5-11 shows a selective system. Figure 5-12 illustrates the general principle by which current-limiting fuses coordinate for any value of short-circuit current sufficient for them to operate in the current-limiting mode. For selectivity, the total clearing I^2t of Fuse B should be less than the minimum melting I^2t of Fuse A. In low-voltage fuse applications, coordination may sometimes be determined through the use of selectivity ratio tables (see 5.6.3).

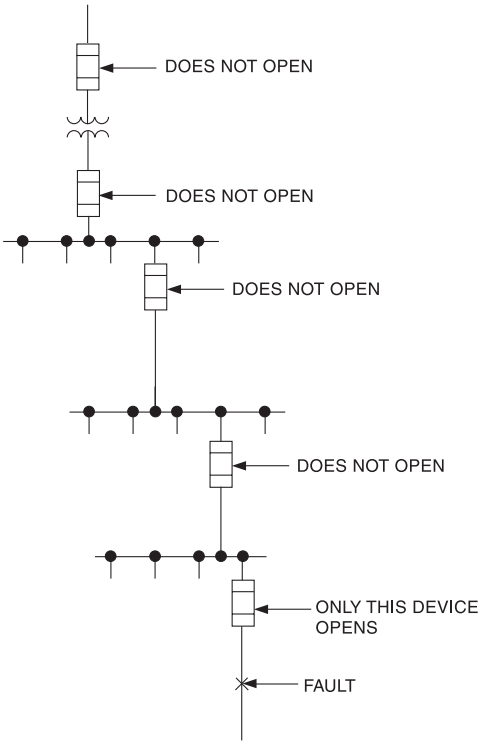

Figure 5-11—Selective operation of overcurrent protective devices

5.6.2 Time-current characteristic (TCC) curves

TCC curves of fuses show the relationship between various overcurrrent values and their respective opening times. They are plotted on transparent log-log paper so they may be easily traced. The current values are normally represented on the abscissa (or bottom of the curve). The time values are shown on the ordinate (or vertical side) and may represent the minimum

Copyright © 2001 IEEE. All rights reserved.

Copyright The Institute of Electrical and Electronics Engineers, Inc.
Provided by IHS under license with IEEE
No reproduction or networking permitted without license from IHS
Not for Resale

melting time, average melting time, or total clearing time, as specified on the curve. The average melting time is assumed to be represented unless otherwise stated. It represents an opening characteristic having a maximum tolerance of ±15% in current for any given time. Thus the –15% boundary represents the minimum melting characteristic, and the +15% boundary usually represents the total clearing time. For times greater than 0.1 s, the maximum melting time is essentially the same as the total clearing time. For times less than 0.01 s, the arcing time may be equal to or greater than the maximum melting time. In these short periods, the I^2t (or fault energy) becomes of increasing importance. The curves in Figure 5-13 and Figure 5-14 show the average melting time characteristics for RK-5 time-delay fuses (30–600 A) and Class L current-limiting fuses (800–6000 A), respectively.

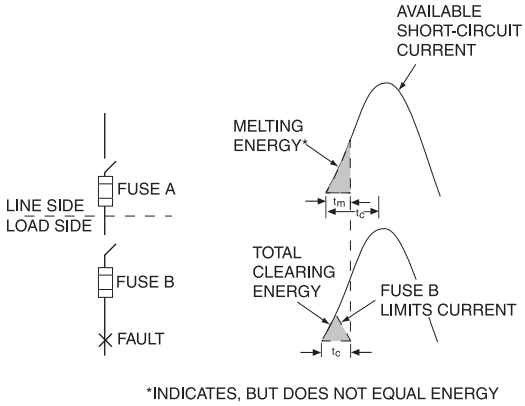

Figure 5-12—Selectivity of current-limiting fuses

5.6.3 Selectivity ratio tables

Table 5-1 shows a typical selectivity schedule for various combinations of fuses. This schedule is general and is different for each fuse manufacturer. Specific data are available from the fuse manufacturers. An example of using Table 5-1 is found in Figure 5-15, where a 1200 A Class L fuse is to be selectively coordinated with a 400 A Class J current-limiting fuse.

Selectivity schedules or tables are used as a simple check for selectivity, assuming that identical or reduced fault currents flow through the circuits in descending order, that is, from main, to feeder, to branch. Where closer fuse sizing than indicated is desired, the fuse manufacturer should be consulted as the ratios may be reduced for lower values of short-circuit current. A coordination study may be desired when the simple check as outlined is not sufficient and can be accomplished by plotting fuse TCC curves on standard log-log graph paper. If fuse ratios for high- or medium-voltage fuses to low-voltage fuses are not available, it is recommended that the fuse curves in question be plotted on log-log paper. Also, fuse ratios cannot be used with fuses at different voltages or from different manufacturers. Fuse manufacturers can furnish selectivity tables showing actual ampere ratings.

Copyright © 2001 IEEE. All rights reserved.

Copyright The Institute of Electrical and Electronics Engineers, Inc.
Provided by IHS under license with IEEE
No reproduction or networking permitted without license from IHS
Not for Resale

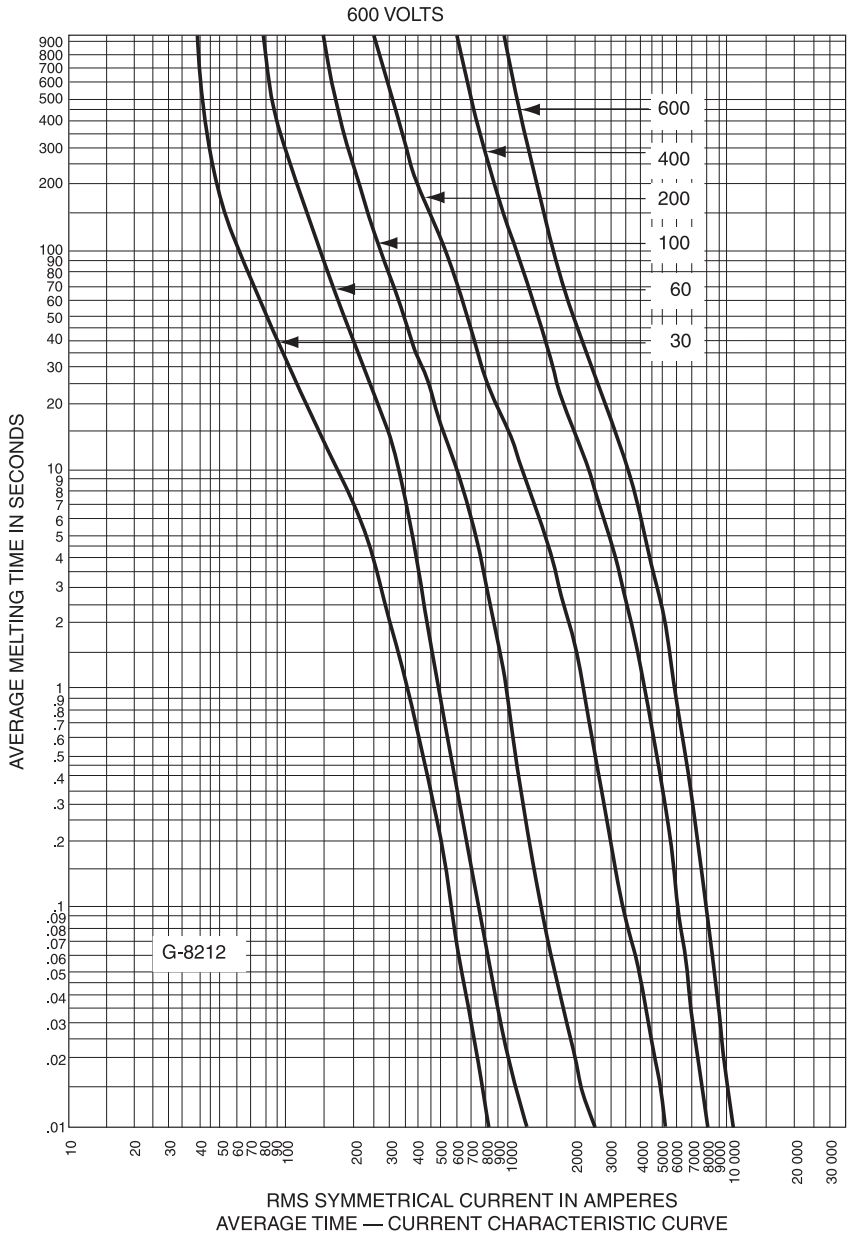

NOTE: FOR ILLUSTRATION PURPOSES ONLY. REFER TO FUSE MANUFACTURER FOR SPECIFIC AND UP-TO-DATE DATA.

Figure 5-13—Time-delay fuses, Class RK-5

Copyright © 2001 IEEE. All rights reserved.

Copyright The Institute of Electrical and Electronics Engineers, Inc.
Provided by IHS under license with IEEE
No reproduction or networking permitted without license from IHS
Not for Resale

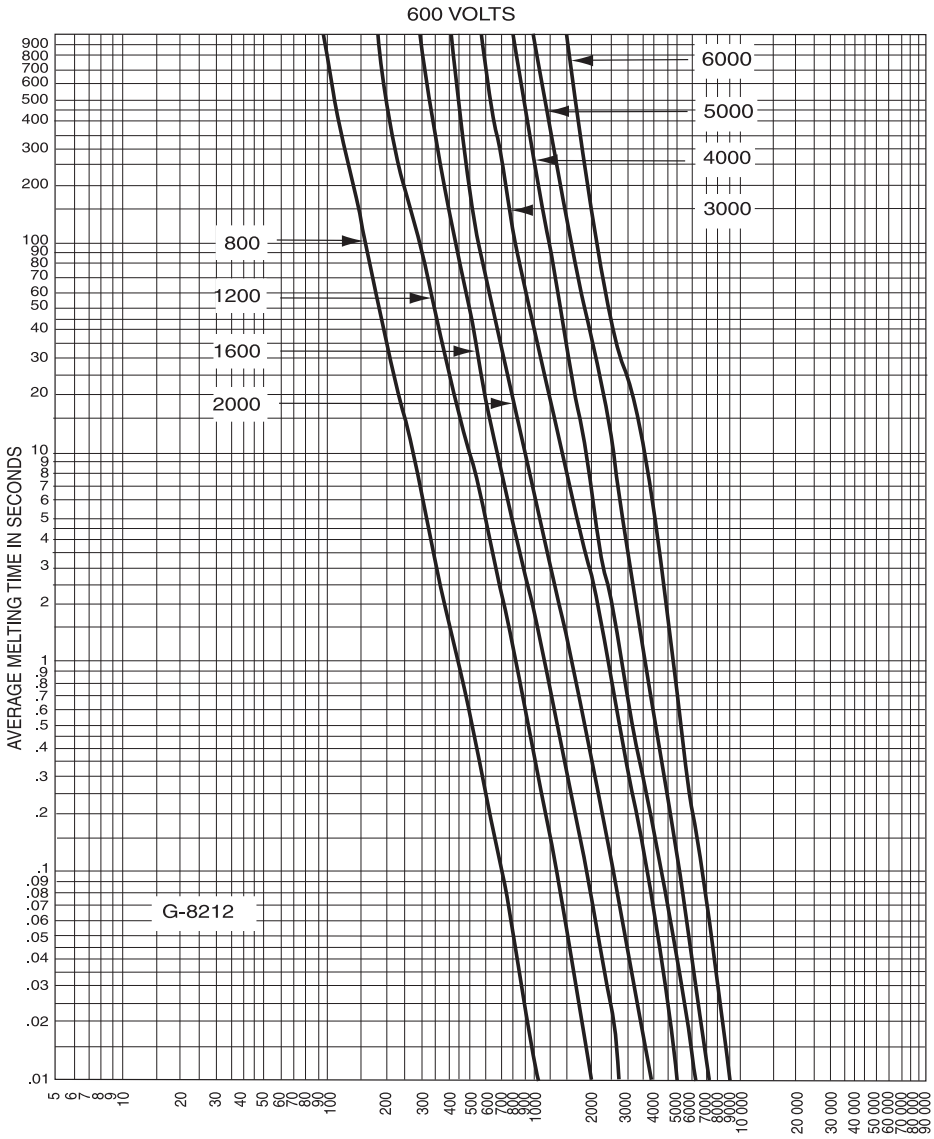

NOTE: FOR ILLUSTRATION PURPOSES ONLY. REFER TO FUSE MANUFACTURER FOR SPECIFIC AND UP-TO-DATE DATA.

Figure 5-14—Current-limiting fuse, Class L

Copyright © 2001 IEEE. All rights reserved.

Copyright The Institute of Electrical and Electronics Engineers, Inc.
Provided by IHS under license with IEEE
No reproduction or networking permitted without license from IHS
Not for Resale

Table 5-1—Typical selectivity schedule[a] for low voltage fuses

Line side	Load side					
	Class L fuse 601–6000 A	**Class K1 fuse 0–600 A**	**Class J fuse 0–600 A**	**Class K5 time-delay fuse 0–600 A**	**Class J time-delay fuse 0–600 A**	**Class G fuse 0–60 A**
Class L fuse 601–6000 A	2:1	2:1	2:1	6:1	2:1	
Class K1 fuse 0–600 A		2:1	3:1	8:1	4:1	4:1
Class J fuse 0–600 A		3:1	3:1	8:1	4:1	4:1
Class K5 time-delay current-limiting fuse 0–600 A		1.5:1	1.5:1	2:1	1.5:1	2:1
Class J time-delay fuse 0–600 A		1.5:1	1.5:1	8:1	2:1	2:1

NOTE—For illustration only. Refer to fuse manufacturer for specific and up-to-date data.

[a]Exact ratios vary with ampere ratings, system voltage, and short-circuit current.

NOTE—At short-circuit power factors greater than 15%, peak and equivalent rms let-through currents are less than the values that can be determined from a let-through chart. However, no acceptable method has been developed to determine these lower values. Therefore, the line with a slope of 2.3 may not be moved to the right or left to account for power factors other than 15%. These charts then provide worst case values for power factors of 15% or greater.

5.6.4 Example selectivity study

A typical example showing selectivity between a high-voltage and a low-voltage fuse using this graphic analysis is shown in Figure 5-16. The total clearing curve of the 1200 A low-voltage fuse and the minimum melting curve of the 125E-rated 5 kV fuse are separated by clear space and thus are said to be selective. The curves are referred to 240 V because this study is of secondary faults.

5.7 Current-limiting characteristics

Due to the speed of response to short-circuit currents, current-limiting fuses have the ability to cut off the current before it reaches its full prospective short-circuit value. Figure 5-1, Figure 5-2, and Figure 5-12 show the current-limiting action of fuses. The available short-circuit current would flow if no fuse were in the circuit or if a noncurrent-limiting protective device were in the circuit. In its current-limiting range, a current-limiting fuse limits the peak current to a value less than the available value; opens in 0.5 cycle or less in its current-limiting range; and, therefore, lets through only a portion of the available short-circuit energy.

Copyright © 2001 IEEE. All rights reserved.

Copyright The Institute of Electrical and Electronics Engineers, Inc.
Provided by IHS under license with IEEE
No reproduction or networking permitted without license from IHS
Not for Resale

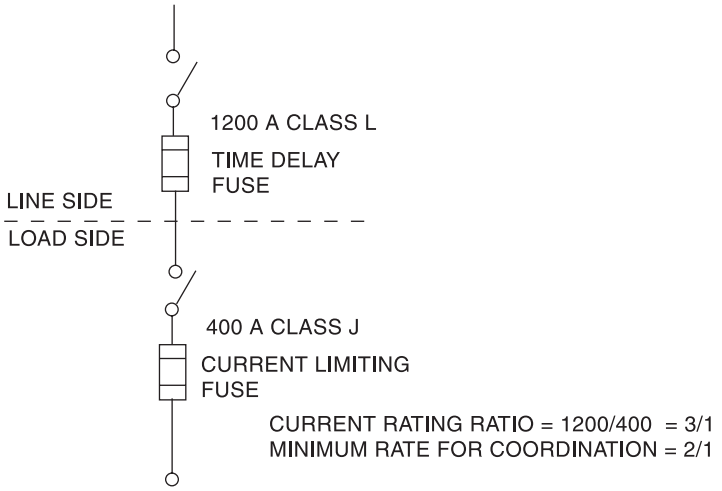

NOTE: CHECK SPECIFIC MANUFACTURER FOR EXACT DATE

Figure 5-15—Typical application of selective coordination (see Table 5-1)

The degree of current limitation is usually represented in the form of peak let-through current charts.

5.7.1 Peak let-through current charts

Peak let-through current charts (sometimes referred to as current-limiting effect curves) are useful for determining the degree of short-circuit protection that a current-limiting fuse provides to the equipment beyond it. These charts show fuse peak let-through current as a function of available symmetrical rms current, as shown in Figure 5-17. The straight line running from the lower left to the upper right shows a 2.3 relationship (based on a 15% power factor; see UL 248-1-2000 and CSA C22.2 No. 248-1-2000) between the peak current that would occur without a current-limiting devise in the circuit and the available symmetrical rms current. Peak let-through current and apparent equivalent rms let-through current can be determined from the let-through current charts and are useful in relating to equipment withstandability.

Let-through data may be compared to short-circuit ratings of the fixed components that are static and have a time rating of 0.5 cycle or longer at a test circuit power factor of 15% or greater. Examples include wire, cable, and bus. An example showing the application of the let-through current charts is represented in Figure 5-18, where the load-side component is protected by an 800 A current-limiting fuse.

Example: Determine the fuse let-through current values with 40 000 A rms symmetrical available at the line side of the fuse. Enter the let-through current chart of Figure 5-17 at an available current of 40 000 A rms symmetrical, and find a fuse peak let-through current of

 Copyright © 2001 IEEE. All rights reserved.

--`,,`-`-`,,`,,`,`,,`---
Copyright The Institute of Electrical and Electronics Engineers, Inc.
Provided by IHS under license with IEEE
No reproduction or networking permitted without license from IHS Not for Resale

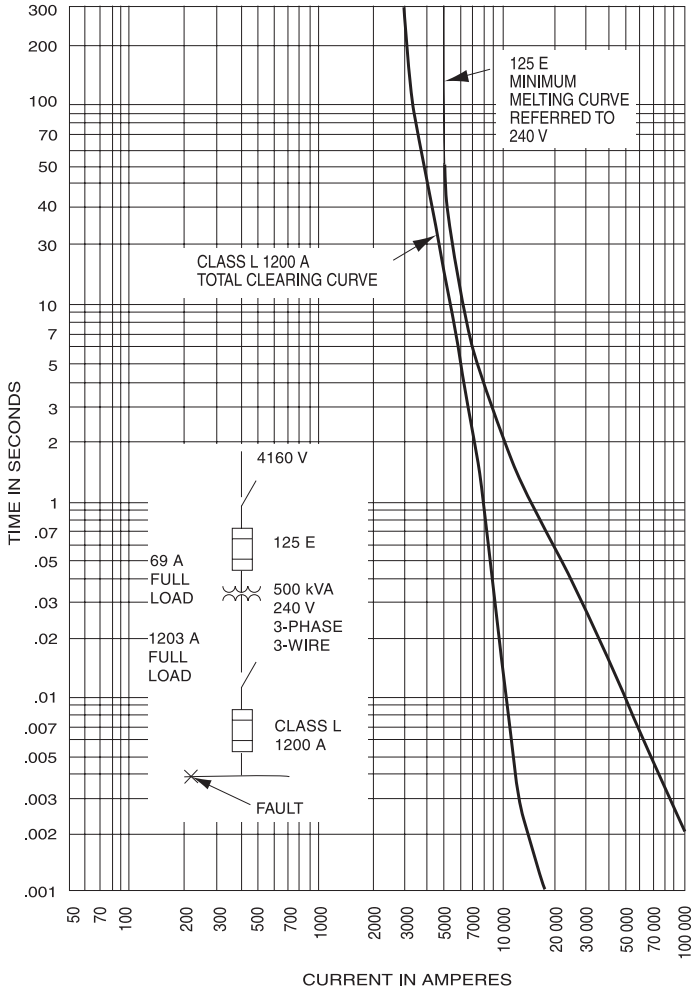

NOTE: FOR ILLUSTRATION PURPOSES ONLY. REFER TO FUSE MANUFACTURER FOR SPECIFIC AND UP-TO-DATE DATA.

Figure 5-16—Typical coordination study of primary and secondary fuses showing selective system

38 000 A and an effective rms current of 16 500 A. The clearing time is less than 0.5 cycle. The load-side circuit components is not subjected to an I^2t duty greater than the total clearing let-through I^2t of the fuse.

Magnetic forces vary with the square of the peak current I_P^2 and can be severe. These forces can be reduced considerably when current-limiting fuses are used.

Copyright © 2001 IEEE. All rights reserved.

Copyright The Institute of Electrical and Electronics Engineers, Inc.
Provided by IHS under license with IEEE
No reproduction or networking permitted without license from IHS
Not for Resale

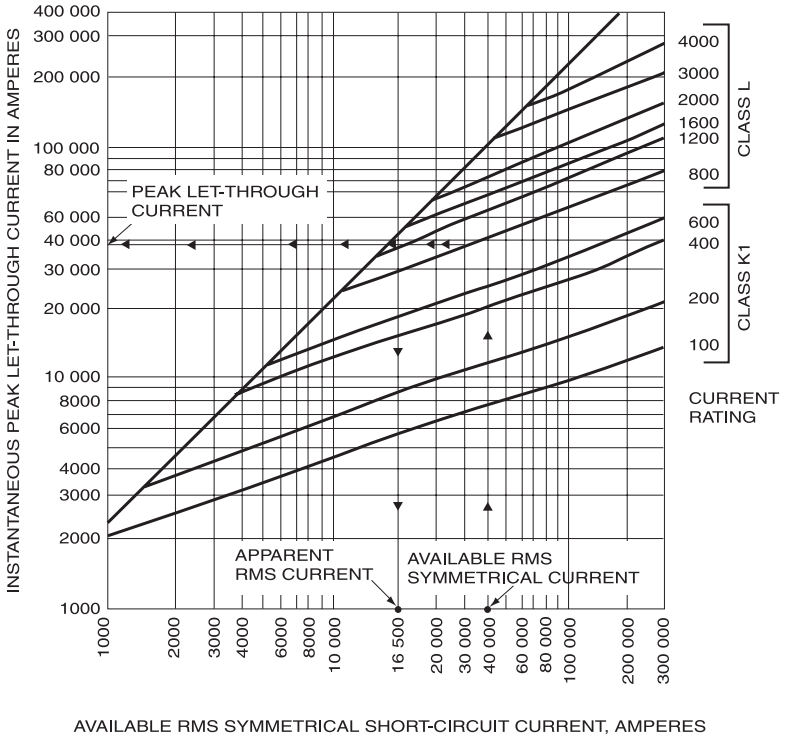

NOTE: FOR ILLUSTRATION PURPOSES ONLY. REFER TO FUSE MANUFACTURER FOR SPECIFIC AND UP-TO-DATE DATA.

Figure 5-17—Typical 60 Hz peak let-through current as a function of available rms symmetrical current (15% power factor)

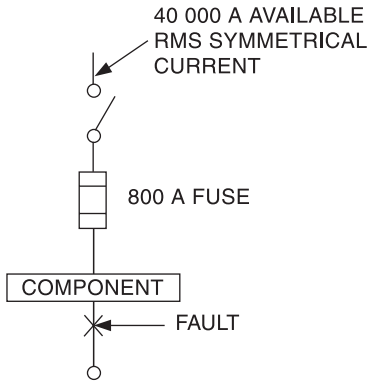

Figure 5-18—Example for applying fuse let-through charts

Copyright © 2001 IEEE. All rights reserved.

Copyright The Institute of Electrical and Electronics Engineers, Inc.
Provided by IHS under license with IEEE
No reproduction or networking permitted without license from IHS
Not for Resale

5.7.2 Maximum clearing I^2t

I^2t is a measure of the energy that a fuse lets through while clearing a fault. Every piece of electrical equipment is limited in its capability to withstand energy. The equipment I^2t withstand rating can be compared with maximum clearing I^2t values for fuses. These maximum clearing I^2t values are available from fuse manufacturers.

5.8 Special applications for low-voltage fuses

5.8.1 Bus-bracing requirements

Reduced bus-bracing requirements may be attained when current-limiting fuses are used. Figure 5-19 shows an 800 A motor-control center being protected by 800 A Class L fuses. The maximum available fault current to the motor-control center is 40 000 A rms symmetrical. If a noncurrent-limiting device were used ahead of the motor-control center, the bracing requirement would be a minimum of 40 000 A rms symmetrical, with a peak value of 92 000 A (2.3 × 40 000 A). For this example with current-limiting fuses, the maximum peak current has been reduced from 92 kA to 38 kA with a corresponding reduction in effective rms available current from 40 kA to 16.5 kA. As a result, bus bracing of 16.5 kA or greater is possible rather than requiring the full 40 kA bracing. Most bus is now listed for maximum short-circuit currents with specific types and sizes of current-limiting fuses. The bus manufacturer should be consulted for these specific combination ratings.

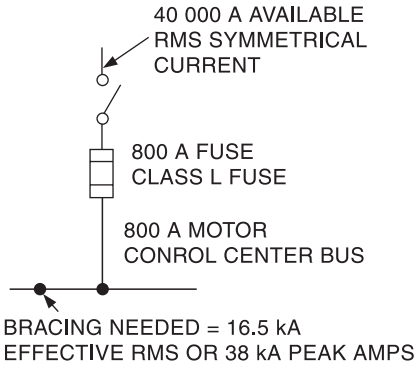

Figure 5-19—Example for determining bus-bracing requirements of 800 A motor-control center

5.8.2 Circuit breaker protection

Molded case, insulated case, and power circuit breakers protected by current-limiting fuses may be applied in circuits where the available short-circuit current exceeds the interrupting rating of the circuit breakers alone. The short-circuit interrupting rating for older style

Copyright © 2001 IEEE. All rights reserved.

Copyright The Institute of Electrical and Electronics Engineers, Inc.
Provided by IHS under license with IEEE
No reproduction or networking permitted without license from IHS
Not for Resale

nondynamic impedance circuit breakers can be compared to fuse let-through current values to determine the degree of protection provided. Using present methods, engineering protection for modern circuit breakers exhibiting dynamic impedance through the use of repulsion (or blow-apart) contacts is not possible.

However, nationally recognized testing laboratories have developed a set of tests that do establish that a particular fuse and circuit breaker combination will successfully clear a fault. These successful combinations are given a series rating and are typically published in recognized component directories. These recognized combinations should be specified for use in load centers, panelboards, and switchboards that have been tested, listed, and marked for their use. The circuit breaker and fuse manufacturers should be consulted for proper applications.

An example of applying fuses to protect molded-case circuit breakers is given in Figure 5-20, where an older 225 A lighting panel has circuit breakers with an interrupting rating of 14 000 A rms symmetrical. The available fault current at the line side of the lighting panel is 40 000 A rms symmetrical. A 400 A RK-1 fuse would reduce the current at the circuit breakers to an effective 8000 A rms available. With this significant level of current limitation by the fuse ahead of the circuit breaker, the circuit breaker will interrupt an effectively lower short circuit that is within its interrupting rating.

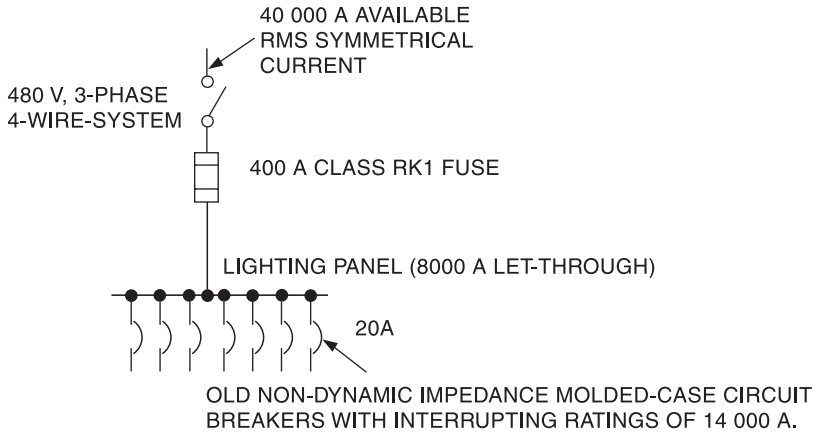

WARNING—The use of circuit breakers with repulsion contact designs must be limited to systems listed for the fuse/circuit breaker combination.

Figure 5-20—Application of fuses to protect molded-case circuit breakers

5.8.3 Wire and cable protection

Fuses should be sized for conductor protection according to the NEC. When noncurrent-limiting overcurrent protective devices are used, reference should be made to the insulated cable thermal damage charts for short-circuit withstands of copper and aluminum cable in ICEA P-32-382-1999. (Also, see Chapter 9.)

Copyright © 2001 IEEE. All rights reserved.

Copyright The Institute of Electrical and Electronics Engineers, Inc.
Provided by IHS under license with IEEE
No reproduction or networking permitted without license from IHS
Not for Resale

When current-limiting fuses are used, small conductors are protected from high-magnitude short-circuit currents even though the fuse may be 300% to 400% of the conductor ampacity rating as allowed by the NEC for nontime-delay fuses for motor branch circuit protection.

5.8.4 Motor starter short-circuit protection

UL tests motor starters under short-circuit conditions (see UL 508-1999). The short-circuit test performed may be used to establish a withstand rating for motor starters. UL tests motor starters of 50 hp 37 kW and under with a minimum of 5000 A of available short-circuit current. Starters over 50 hp 37 kW in size are tested in similar fashion, except with greater available fault currents.

When applying motor starters in systems with high available fault currents, current-limiting fuses are often used to reduce the let-through energy to a value within the withstand of the motor starter. The motor starter manufacturer should be contacted for proper applications.

Figure 5-21 is a typical one-line diagram of a motor circuit, where the available short-circuit current has been calculated to be 40 000 A rms symmetrical at the motor-control center and the fuses are to be selected so that short-circuit protection is provided. The fuse selected should limit the fault current to within the withstand rating of the motor starter. In this case the starter has been investigated and found acceptable for fault levels through 100 000 A when protected by Class J fuses. IEC 60947-4-1 describes two types of motor controller protection in terms of the extent of damage to which the motor controller is subjected during a short circuit. Type 1 is similar to the requirements for listing in UL 508-1999, but the controller may still need to be replaced because of the significant amount of damage allowed. Type 2 is much more restrictive and allows no permanent damage to the controller. Many motor controller manufacturers have had UL verify their controllers with Class J, Class RK-1, and Class CC fuses for Type 2 protection in compliance with IEC 60947-4-1. The motor controller manufacturers or fuse manufacturers should be consulted for lists of specific fuses to use with specific controllers.

5.8.5 Transformer protection

Low-voltage distribution transformers are often equipped on the primary side (above 600 V) with medium-voltage fuses sized for short-circuit protection. Transformer overload protection may be provided by fusing the low-voltage secondary with appropriate fuses sized at 100% to 125% of the transformer secondary full-load amperes. Figure 5-22 shows a proper size of low-voltage fuse for a 1000 kVA transformer to provide overload protection.

Transformers are frequently used in low-voltage electrical distribution systems to transform 480 V to 208Y/120 V. For these types of transformers, appropriate time-delay fuses should be provided, sized at 100% to 125% of the primary full-load current. Consideration should be given to the magnetizing inrush current because dry- and liquid-immersed transformers have inrush currents equivalent to about 12, or even as high as 18, times full-load rating with a duration of 0.1 s (also about 20 to 25 times rating for 0.01 s).

Copyright © 2001 IEEE. All rights reserved.

Copyright The Institute of Electrical and Electronics Engineers, Inc.
Provided by IHS under license with IEEE
No reproduction or networking permitted without license from IHS
Not for Resale

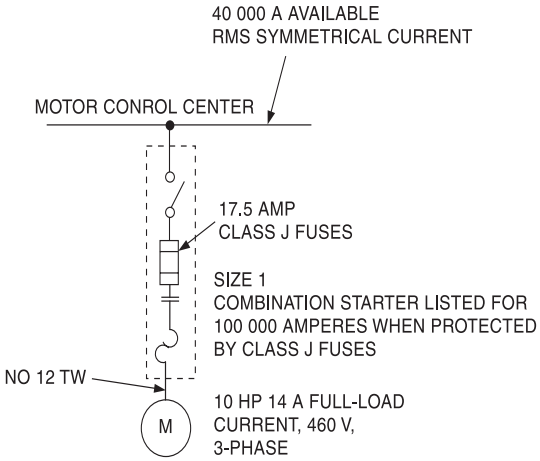

Figure 5-21—Application of fuses to provide short-circuit protection and backup protection for motor starters

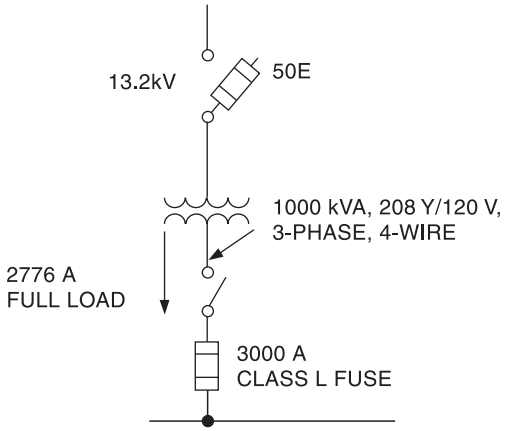

Figure 5-22—Sizing of low-voltage fuses for transformer secondary protection

Inrush currents can be easily checked against the minimum melting curve so that needless opening may be avoided. If necessary, a larger size time-delay fuse may need to be selected. Figure 5-23 shows a 225 kVA lighting transformer with time-delay fuses. See Chapter 11 for transformer protection.

Copyright © 2001 IEEE. All rights reserved.

Copyright The Institute of Electrical and Electronics Engineers, Inc.
Provided by IHS under license with IEEE
No reproduction or networking permitted without license from IHS
Not for Resale

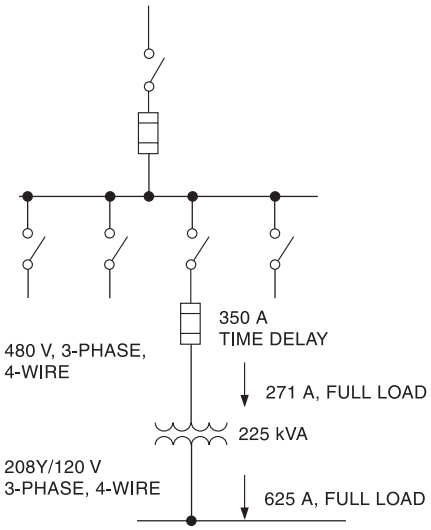

Figure 5-23—Application of time-delay fuses for transformer protection

5.8.6 Motor overcurrent protection

Single- and three-phase motors can be protected by specifying time-delay fuses for motor-running overload protection according to the NEC. These ratings depend on service factor, temperature rise, and application (e.g., jogging). Where motor overload relays are used in motor starters, a larger size time-delay fuse may be used to coordinate with the motor overload relays and provide short-circuit protection.

Combination motor starters that employ overload relays sized for motor-running protection (maximum of 115% for 1.0 service factor and 125% for 1.15 service factor) can incorporate time-delay fuses sized at 115% (1.0 service factor) or 125% (1.15 service factor) or the next larger size to serve as backup protection. (Larger time-delay fuses, sized up to 175%, may be used for branch circuit protection only.) A combination motor starter with backup fuses provides excellent protection, motor control, and flexibility. Figure 5-24 illustrates the use of fuses for protection of a typical motor circuit.

When motors are operated near full-load, single-phasing protection may be provided by time-delay fuses sized at approximately 125% of the motor full-load current. Loss of one phase, either primary or secondary, results in an increase in the line current to the motor. This change is sensed by the motor fuses because they are sized at 125%, and the single-phasing current opens the fuses. If the motors are operated at less than full load, the overload relays and time-delay fuses should be sized to the actual running amperes of the motor. For example, if a motor with a full-load rating of 10 A is being used in a situation where it is drawing only 8 A, the time-delay fuses should be sized at 10 A instead of 12 A. Another option is to utilize antisingle-phasing motor overload relays.

Copyright © 2001 IEEE. All rights reserved.

Copyright The Institute of Electrical and Electronics Engineers, Inc.
Provided by IHS under license with IEEE
No reproduction or networking permitted without license from IHS
Not for Resale

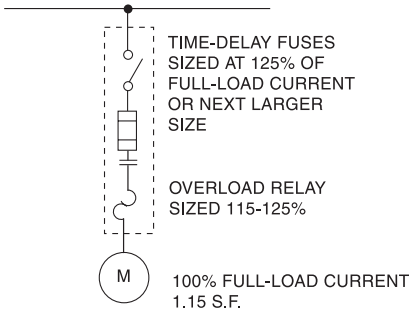

Figure 5-24—Application of time-delay fuses for typical motor circuit

5.8.7 DC applications

Most dc systems require some form of overcurrent and/or short-circuit protection (see Brozek). These systems include dc motor drives and controllers, semiconductor components, telecommunication switching stations (both power and signal), electrical relay and control circuits for medium-voltage circuit breakers, and transit substations. Battery-powered applications from automobiles and factory warehouse vehicles to more sophisticated loads such as uninterruptible power supply (UPS, or battery backup) systems also require dc overcurrent protection. As with any fuse selection, the three elements of system voltage, normal load current, and available short-circuit current should be considered. For proper application, the fuse's ratings should equal or exceed the system parameters. The user should always obtain the proper dc data from the manufacturer.

Furthermore, the manufacturer's dc test data may not necessarily apply to the dc system at hand. Factors including circuit time constant, voltage, and available short-circuit current may preclude the use of certain dc-rated fuses.

A common misconception is that all published ac fuse data may be used for those same fuses on dc systems. Time-current curves that predict a fuse's opening time under overload conditions can be used for ac and sometimes dc current. These curves are typically based on rms current, which is thermally equivalent to dc current. However, dc applications have an added twist in that the time constant of the system should also be considered. The dc time constant affects the melting and clearing time of the fuse under overload and short-circuit conditions. The net result is typically a lower voltage rating for the fuse. For a better understanding of how fuses are rated for dc, see UL 198L-1995.

5.8.7.1 UL 198L-1995

UL 198L-1995 defines the requirements and test procedures for dc-rated fuses for industrial use in accordance with the NEC. Fuses that are tested to UL 198L-1995 should first meet the requirements of their respective ac standard.

Copyright © 2001 IEEE. All rights reserved.

Copyright The Institute of Electrical and Electronics Engineers, Inc.
Provided by IHS under license with IEEE
No reproduction or networking permitted without license from IHS
Not for Resale

5.8.7.2 Overload test

Fuse selection for the overload test is based on internal construction and case size (see UL 198L-1995). The largest ampere rating for each internal design and/or case size is sampled. These fuses should open a circuit adjusted to obtain 200% of the current rating at rated dc voltage. For fuses with current ratings greater than 600 A, the test circuit can deliver 200% to 300% of the current rating at rated dc voltage. The time constant for this test cannot be less than the value given by

$$T = \frac{I^{0.3}}{2} \tag{5-1}$$

where

T is the time constant (ms),
I is the test current (A).

The time constant is the time required for the current to reach 63.2% of the test current and is shown in Figure 5-25.

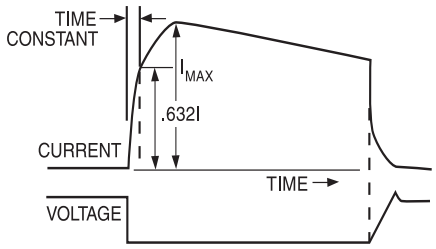

Figure 5-25—Time constant for dc circuits per UL 198L-1995

Additionally, fuses marked with "D," "time delay," "dual element" or similar designations and in compliance with time-delay fuse requirements are to be tested on a circuit adjusted to 900% of the fuse rating at rated dc voltage. (This test is not required for Class L fuses.) For both the 200% and 900% test, the test voltage is maintained for 1 min after circuit interruption to insure that the fuse has permanently cleared the circuit. To pass the test, the fuse casing cannot char or rupture, and external solder connections cannot melt. The time required for the fuse to clear is not specified.

5.8.7.3 Interrupting ability test

To establish the short-circuit interrupting rating, fuses are tested at one of the following dc voltage levels: 60 V, 125 V, 160 V, 250 V, 300 V, 400 V, 500 V, or 600 V (see UL 198L-1995). A Class H fuse has a maximum dc interrupting rating of 10 000 A. All other classes rated 600 A or less have maximum dc interrupting ratings of 10 000 A, 20 000 A, 50 000 A, or 100 000 A. Class L and Class T fuses greater than 600 A have maximum interrupting

Copyright © 2001 IEEE. All rights reserved.

Copyright The Institute of Electrical and Electronics Engineers, Inc.
Provided by IHS under license with IEEE
No reproduction or networking permitted without license from IHS
Not for Resale

ratings of 20 000 A, 50 000 A, or 100 000 A. The time constant for these heavy short-circuit tests cannot be less than 10 ms. As in the overload test, the largest ampere rating for each internal design and/or case size is sampled. To pass, the fuse should remain intact and permanently clear the circuit. The overall length of the cylindrical portion of the fuse cannot be deformed more than 3.2 mm, and molten solder cannot be emitted. After interruption, the recovery voltage is continuously applied for 30 s to ensure that the fuse has become quiescent. Evidence of smoking, unusual heating, or internal arcing during this period is unacceptable. When the interrupting ability test is conducted above 10 000 A, the peak let-through current and clearing I^2t cannot exceed the established ac values for the respective fuse class. DC listed Class L fuses have a minimum interrupting rating of 20 kA. However, UL 248-10-2000 and CSA C22.2 No. 248.10-2000 have 50 kA as the lowest fault level for which maximum clearing I^2t and I peak are defined. Table 5-2 indicates these values for 50 kA available short-circuit current.

Table 5-2—Short-circuit values for Class L fuses

Amperage range	Clearing $I^2t \times 10^{6}$ [a]	$I_P \times 10^{3}$ [b]
601–800	10	80
801–1200	12	80
1201–1600	22	100
1601–2000	35	110

[a]Units are rms amperes^{2}seconds $\times 10^6$
[b]Units are peak amperes $\times 10^3$

Maximum values taken from various fuse classes are shown in Table 5-3. The clearing values shown in Table 5-2 and Table 5-3 are the maximum allowable to meet UL 198L-1995. Actual values of clearing I^2t and Ip may be much less than the maximums and can be obtained from the fuse manufacturer.

5.8.7.4 Maximum energy test

The final short-circuit test for fuse types with interrupting ratings greater than 10 000 A is the maximum energy test (see UL 198L-1995). These fuses should interrupt short-circuit current of at least 10 000 A and limit the peak let-through current to 60% to 80% of the peak available. The largest amperage size of each fuse case size is sampled. Before testing, fuses are preconditioned in a high-humidity environment for 5 days.

Fuses listed to UL 198L-1995 typically are rated at a dc voltage level lower than the ac rating. The lower voltage rating is a direct result of the time constant requirement within the standard.

Copyright © 2001 IEEE. All rights reserved.

Copyright The Institute of Electrical and Electronics Engineers, Inc.
Provided by IHS under license with IEEE
No reproduction or networking permitted without license from IHS Not for Resale

Table 5-3—Maximum clearing I^2t and Ip for various fuse classes: available short-circuit current between threshold and 50 kA rms

Amperage range	Class CC		Class J		Class RK5	
	Clearing $I^2t \times 10^3$ [a]	$Ip \times 10^3$ [b]	Clearing $I^2t \times 10^3$ [a]	$Ip \times 10^3$ [b]	Clearing $I^2t \times 10^3$ [a]	$Ip \times 10^3$ [b]
0–20	2	3	7	6	50	11
21–30	7	6	7	6	50	11
31–60	–	–	30	8	200	20
61–100	–	–	60	12	500	22
101–200	–	–	200	16	1600	32
210–400	–	–	1000	25	5000	50
401–600	–	–	2500	35	10 000	65
601–800	–	–	–	–	–	–
801–1200	–	–	–	–	–	–

Amperage range	Class RK1		Class T (600 V)		Class T (300 V)	
	Clearing $I^2t \times 10^3$ [a]	$Ip \times 10^3$ [b]	Clearing $I^2t \times 10^3$ [a]	$Ip \times 10^3$ [b]	Clearing $I^2t \times 10^3$ [a]	$Ip \times 10^3$ [b]
0–20	10	6	7	6	3.5	5
21–30	10	6	7	6	3.5	5
31–60	40	10	30	8	15	7
61–100	100	14	60	12	40	9
101–200	400	18	200	16	150	13
210–400	1200	33	1000	25	550	22
401–600	3000	43	2500	35	1000	31
601–800	–	–	4000	50	1500	37
801–1200	–	–	–	–	3500	50

[a]Units are rms amperes^{2}seconds$\times 10^3$
[b]Units are peak amps $\times 10^3$

5.8.7.5 Mine duty fuses

UL 198M-1995 is an additional procedure to list Class K and Class R fuses intended for use in protecting trailing cables in dc circuits in mines. The standard follows MSHA requirements. Fuses tested to UL 198M-1995 should first comply with their respective ac standard. The dc voltage ratings for UL 198M-1995 are 300 V or 600 V. The largest ampere rating for each internal design and/or case size is sampled after temperature and humidity conditioning. The overload and short-circuit requirements are given in Table 5-4.

The minimum time constants for this test are shown in Table 5-5. The time constants required for UL 198M-1995 are greater than the time constants in UL 198L-1995. Fuses are tested both in open fuse clips and in trolley-tap fuseholders. After the fuse interrupts the circuit, the test voltage is applied for 30 s. Performance is acceptable if the fuse clears without excessive smoking or excessive venting of gases.

Copyright © 2001 IEEE. All rights reserved.

Copyright The Institute of Electrical and Electronics Engineers, Inc.
Provided by IHS under license with IEEE
No reproduction or networking permitted without license from IHS
Not for Resale

Table 5-4—Tests of fuses

200% clearing at rated voltage[a]
300% clearing at rated voltage[b]
900% overload at rated voltage
Interrupting ability at 10 000 A
Interrupting ability at 20 000 A
Source: UL 198M-1995.

[a]For fuses with a rating 200 A or less
[b]For fuses with a rating greater than 200 A

Table 5-5—Circuit time constants

Test current (A)	Time constant (ms)
0–99	2
100–999	6
1000–9999	8
+10 000	16

Superficial damage to the fuse is allowable, that is, a maximum of 1.588 mm hole in any metal part of fuse or a maximum of one 3.175 mm opening in any nonmetal part of the fuse. Restrike is allowable within 30 ms of initial current interruption. If a restrike occurs, the test voltage is again applied for 30 s, and no further restriking is allowable. Fuses tested in the trolley tap fuseholder cannot damage the fuseholder. UL 198M-1995 does not specify peak allowable let-through current or maximum I^2t values. It is exceedingly difficult for fuses to just survive this test because of the voltage constraints and relatively long time constants. For a better understanding of how these parameters affect the fuse, an explanation of circuit time constant is given in 5.8.7.6.

Copyright © 2001 IEEE. All rights reserved.

Copyright The Institute of Electrical and Electronics Engineers, Inc.
Provided by IHS under license with IEEE
No reproduction or networking permitted without license from IHS
Not for Resale

5.8.7.6 DC time constant

The circuit time constant is the time required for the current to reach 63.2% of the peak current and may be stated as

$$I = (1 - e^{-1})I_P \quad (5\text{-}2)$$

where

I is current at one time constant,
I_p is maximum peak current.

The time constant can be calculated by taking the ratio of inductance to resistance L/R in the circuit. In simple terms, magnetic energy is stored in the inductance (in henrys) and opposes any change in current. The relationship between energy and inductance is shown in Equation (5-3).

$$U = \left(\frac{1}{2}\right)Li^2 \quad (5\text{-}3)$$

where

U is magnetic energy,
L is inductance,
i is current.

For a circuit with a given resistance, a large inductance causes a slow rate of current rise, and negligible inductance has a fast current rise. The maximum value to which the current rises is limited by the circuit resistance. As a rule of thumb, fuses applied at rated voltage on dc circuits, having time constants less than 2 ms, have short-circuit melting and clearing characteristics similar to fuses applied on ac circuits with short-circuit power factors of 15% or greater. This assumption can be made because the current rise time di/dt is comparable.

5.8.7.7 DC voltage ratings

To meet the requirements in UL 198L-1995 or UL 198M-1995, the dc voltage ratings of industrial power fuses are typically derated to about one half of the ac voltage rating. The voltage derating decreases the arcing time needed to equalize to the system voltage, decreases the arcing I^2t, and maintains clearing I^2t to below the allowable levels. Semiconductor fuses that are designed primarily for dc systems typically have voltage derating charts for a given time constant. One manufacturer's voltage derating table is shown in Table 5-6.

For most battery protection applications, fuse operation is straightforward and reliable. Batteries contain little inductance and, as stated by one large UPS manufacturer, a shorted battery is similar to a fault through a resistor. A shorted battery drains rapidly and gives rise to high di/dt. Fuses listed to UL 198L-1995 (and certainly UL 198M-1995) are generally

Copyright © 2001 IEEE. All rights reserved.

Copyright The Institute of Electrical and Electronics Engineers, Inc.
Provided by IHS under license with IEEE
No reproduction or networking permitted without license from IHS
Not for Resale

Table 5-6—Voltage derating vs time constant[a]

Time constant (L/R) ms	Percentage of rated voltage (rms)	
	700 V fuses	1000 V fuses
5	80–90%	85–95%
10	70–80%	80–90%
20	60–70%	70–85%
30	55–70%	65–80%
40	50–65%	60–75%
50	50–65%	55–70%
60	45–60%	50–65%

[a]Based on fuse opening time of 25–300 ms

applicable for UPS battery protection. Proper placement of the fuse in a battery circuit is beyond the scope of this recommended practice (see Nailen). For applications where inductive loads are present (e.g., in motors, solenoids, any other coil loads), the circuit time constant should be determined to ensure proper application of the fuse. By specifying fuses with a rated dc voltage beyond the system voltage, the user incorporates more leeway into the allowable time constants. If the dc voltage capability in a particular fuse application is uncertain, the fuse manufacturer should be consulted.

5.9 References

This recommended practice shall be used in conjunction with the following standards. When the following standards are superseded by an approved revision, the revision shall apply.

CSA C22.2 No. 248.1-2000, Low Voltage Fuses—Part 1: General Requirements.[2]

CSA C22.2 No. 248.2-2000, Low Voltage Fuses—Part 2: Class C Fuses.

CSA C22.2 No. 248.3-2000, Low Voltage Fuses—Part 3: Class CA and CB Fuses.

CSA C22.2 No. 248.4-2000, Low Voltage Fuses—Part 4: Class CC Fuses.

CSA C22.2 No. 248.5-2000, Low Voltage Fuses—Part 5: Class G Fuses.

CSA C22.2 No. 248.6-2000, Low Voltage Fuses—Part 6: Class H Fuses, Nonrenewable.

[2]CSA publications are available from the Canadian Standards Association (Standards Sales), 178 Rexdale Blvd., Etobicoke, Ontario, Canada M9W 1R3 (http://www.csa.ca/).

Copyright © 2001 IEEE. All rights reserved.

--`,-`-`,,`,,`,`,,`---

Copyright The Institute of Electrical and Electronics Engineers, Inc.
Provided by IHS under license with IEEE
No reproduction or networking permitted without license from IHS
Not for Resale

CSA C22.2 No. 248.7-2000, Low Voltage Fuses—Part 7: Class H Fuses, Renewable.

CSA C22.2 No. 248.8-2000, Low Voltage Fuses—Part 8: Class J Fuses.

CSA C22.2 No. 248.9-2000, Low Voltage Fuses—Part 9: Class K Fuses.

CSA C22.2 No. 248.10-2000, Low Voltage Fuses—Part 10: Class L Fuses.

CSA C22.2 No. 248.11-2000, Low Voltage Fuses—Part 11: Plug Fuses.

CSA C22.2 No. 248.12-2000, Low Voltage Fuses—Part 12: Class R Fuses.

CSA C22.2 No. 248.14-2000, Low Voltage Fuses—Part 14: Supplemental Fuses.

CSA C22.2 No. 248.15-2000, Low Voltage Fuses—Part 15: Class T Fuses.

ICEA P-32-382-1999, Short-Circuit Characteristics of Insulated Cable.[3]

IEC 60947-4-1, Low-Voltage Switchgear and Controlgear, Part 4: Contactors and Motor-Starters, Section One—Electromechanical Contactors and Motor-Starters.[4]

NEMA FU 1-1986, Standard for Low-Voltage Cartridge Fuses 600 Volts or Less.[5]

NFPA 70-1999, National Electrical Code® (NEC®).[6]

UL 198L-1995, Safety Standard for DC Fuses for Industrial Use.[7]

UL 198M-1995, Safety Standard for Mine-Duty Fuses.

UL 248-1-2000, Safety Standards for Low Voltage Fuses—Part 1: General Requirements.

UL 248-2-2000, Safety Standard for Class C Fuses.

UL 248-3-2000, Safety Standard for Class CA and CB Fuses.

UL 248-4-2000, Safety Standard for Class CC Fuses.

---

[3]ICEA publications are available from ICEA, P.O. Box 20048, Minneapolis, MN 55420, USA (http://www.icea.org).

[4]IEC publications are available from the Sales Department of the International Electrotechnical Commission, Case Postale 131, 3, rue de Varembé, CH-1211, Genève 20, Switzerland/Suisse (http://www.iec.ch/). IEC publications are also available in the United States from the Sales Department, American National Standards Institute, 11 West 42nd Street, 13th Floor, New York, NY 10036, USA.

[5]NEMA publications are available from Global Engineering Documents, 15 Inverness Way East, Englewood, CO 80112, USA (http://global.ihs.com/).

[6]The NEC is published by the National Fire Protection Association, Batterymarch Park, Quincy, MA 02269, USA (http://www.nfpa.org/). Copies are also available from the Institute of Electrical and Electronics Engineers, 445 Hoes Lane, P.O. Box 1331, Piscataway, NJ 08855-1331, USA (http://standards.ieee.org/).

[7]UL standards are available from Global Engineering Documents, 15 Inverness Way East, Englewood, CO 80112, USA (http://global.ihs.com/).

Copyright © 2001 IEEE. All rights reserved.

Copyright The Institute of Electrical and Electronics Engineers, Inc.
Provided by IHS under license with IEEE
No reproduction or networking permitted without license from IHS
Not for Resale

UL 248-5-2000, Safety Standard for Class G Fuses.

UL 248-6-2000, Safety Standard for Class H Nonrenewable Fuses.

UL 248-7-2000, Safety Standard for Class H Renewable Fuses.

UL 248-8-2000, Safety Standard for Class J Fuses.

UL 249-9-2000, Safety Standard for Class K Fuses.

UL 248-10-2000, Safety Standard for Class L Fuses.

UL 248-11-2000, Safety Standard for Plug Fuses.

UL 248-12-2000, Safety Standard for Class R Fuses.

UL 248-14-2000, Fuses for Supplementary Overcurrent Protection.

UL 248-15-2000, Safety Standard for Class T Fuses.

UL 508-1999, Safety Standard for Industrial Control Equipment.

5.10 Bibliography

[B1] Brozek, J. P., "DC Overcurrent Protection—Where We Stand," IEEE Conference Paper, I&CPS 92-20 IEEE Log Number 9212380.

[B2] IEEE 100, *The Authoritative Dictionary of IEEE Standards Terms,* Seventh Edition.[8]

[B3] Nailen, R. L., "Battery Protection—Where Do We Stand?" *IEEE Transactions*, vol. 27, no. 4, pp. 658–667, Jul./Aug. 91.

[8]IEEE publications are available from the Institute of Electrical and Electronics Engineers, 445 Hoes Lane, P.O. Box 1331, Piscataway, NJ 08855-1331, USA (http://standards.ieee.org/).

 Copyright © 2001 IEEE. All rights reserved.

Copyright The Institute of Electrical and Electronics Engineers, Inc.
Provided by IHS under license with IEEE
No reproduction or networking permitted without license from IHS Not for Resale

Chapter 6
High-voltage fuses (1000 V through 169 kV)

6.1 Definitions

Except for definitions specifically referring to low-voltage fuses, the general discussion in 5.1 and definitions in 5.2 apply to high-voltage fuses. In addition, the terms in 6.1.1 through 6.1.10 apply to high-voltage fuses:

6.1.1 applicable standards: Standards from the American National Standards Institute (ANSI) and Institute of Electrical and Electronics Engineers (IEEE) define high-voltage fuses as fuses rated above 1000 V. High-voltage fuses are available in voltages through 169 kV maximum rating. ANSI C84.1-1989 [B1][1] defines medium-voltage systems as having a nominal voltage greater than 1000 V and less than 100 000 V. High-voltage systems are defined as having a nominal voltage equal to or greater than 100 000 V and equal to or less than 230 000 V. High-voltage fuses are, therefore, used on both medium- and high-voltage systems up to their maximum voltage ratings. The following standards apply to high-voltage fuses:

- IEEE Std C37.40-1993[2]
- IEEE Std C37.41-2000
- ANSI C37.42-1996
- ANSI C37.44-1981
- ANSI C37.46-1981
- ANSI C37.47-1981
- IEEE Std C37.48-1987
- ANSI C37.53.1-1989

6.1.2 backup current-limiting fuse: A fuse capable of interrupting all currents from its maximum rated interrupting current down to its rated minimum interrupting current. (IEEE Std C37.40-1993) The rated minimum interrupting current for backup current-limiting fuses may be obtained from the manufacturer.

The backup current-limiting fuse requires another device in series (e.g., an expulsion fuse, a relayed-controlled motor contractor) capable of interrupting currents below its minimum interrupting current. The characteristics of both devices should be coordinated so that the series device and the backup current-limiting fuse protect each other at currents above or below their interrupting capabilities.

6.1.3 current-limiting fuse: A fuse unit that, when its current-responsive element is melted by a current within the fuse's specified current-limiting range, abruptly introduces a high resistance to reduce current magnitude and duration resulting in subsequent current interruption. (IEEE Std C37.40-1993) This fuse interrupts the circuit at a natural current zero for all

[1]Numbers in brackets correspond with the numbers in the bibliography in 6.6.

[2]Information on references can be found in 6.5.

Copyright © 2001 IEEE. All rights reserved.

Copyright The Institute of Electrical and Electronics Engineers, Inc.
Provided by IHS under license with IEEE
No reproduction or networking permitted without license from IHS
Not for Resale

currents below the specified current-limiting range. However, the fuse interrupts in less than half a cycle in its current-limiting mode by producing a high arc voltage across its terminals. The specified current-limiting range normally occurs above approximately 25 times the rating of the fuse and limits the let-through energy as well as the available peak current.

6.1.4 expulsion fuse: A vented fuse (unit) in which the expulsion effect of the gases produced by internal arcing, either alone or aided by other mechanisms, results in current interruption. (IEEE Std C37.40-1993) Expulsion fuses interrupt the circuit at a natural current zero, without limiting the peak of the available fault current or the available energy. Expulsion fuses do not produce high arc voltages during fault interruption.

6.1.5 full-range current-limiting fuse: A fuse capable of interrupting all currents from its rated interrupting current down to the minimum continuous current that causes melting of the fusible element(s), with the fuse applied at the maximum ambient temperature specified by the fuse manufacturer. (IEEE Std C37.40-1993)

6.1.6 general purpose current-limiting fuse: A fuse capable of interrupting all currents from the rated interrupting current down to the current that causes melting of the fusible element in no less than 1 h. (IEEE Std C37.40-1993) Care should be exercised to ensure that no circuit conditions exist to cause melting of the fusible element from a current less than the fuse's 1 h melting current.

6.1.7 I^2t (ampere-squared seconds) or let-through energy: In fuse terminology, a representation for energy because, for most cases, I^2t has approximately a linear relationship to energy. Current-limiting fuse manufacturers publish minimum-melting and maximum total-clearing I^2t values for their products. In fuse application considerations where the user wants to minimize damage to protected equipment, a fuse with the lowest let-through I^2t is generally chosen.

6.1.8 peak arc voltage: When a current-limiting fuse interrupts a current, a voltage that appears across its terminals during the arcing interval. For expulsion fuses, this voltage is normally substantially lower than the system voltage regardless of the fault current magnitude and, therefore, is not a consideration in their application. However, when a current-limiting fuse is interrupting a current in its current-limiting mode, the voltage across the fuse exceeds the system voltage. However, modern current-limiting fuse elements, such as perforated ribbon, hold the arc voltage to within the levels defined by standards. ANSI C37.46-1981 and ANSI C37.47-1981 specify the maximum for these voltages for current-limiting power fuses, and Table 6-1 shows these values. In some designs, the current-limiting fuse's peak arc voltage is dependent on the system voltage. If such a fuse is applied in a system whose voltage is less than the fuse's rated voltage, the peak arc voltage is lower than its published value. The manufacturer should be consulted for these peak arc voltages.

The peak arc voltage resulting from the operation of current-limiting fuses should be considered when applying these fuses. The voltages are transitory. As such, they mimic other transient voltages such as those produced by lightning strokes or switching surges. Even though they exceed the nominal system voltage, the voltages typically are within normal equipment voltage withstand levels. Experience has shown that current-limiting fuses can be

 Copyright © 2001 IEEE. All rights reserved.

Copyright The Institute of Electrical and Electronics Engineers, Inc.
Provided by IHS under license with IEEE
No reproduction or networking permitted without license from IHS Not for Resale

Table 6-1—Maximum permissible overvoltages for current-limiting power fuses

Rated maximum voltage (kV, rms)	Maximum peak overvoltages (kV, crest)	
	0.5 A to 12 A	Over 12 A
2.8	13	9
5.5	25	18
8.3	38	26
15.0	68	47
15.5	70	49
22.0	117	70
25.8	117	81
27.0	123	84
38.0	173	119

used with other equipment on the electric power distribution systems, such as metal oxide varistor or silicon carbide surge arresters. See 6.4.2.6 for further discussion of current-limiting fuses and peak arc voltage.

6.1.9 peak let-through current: For expulsion fuses, the prospective peak value of current based on the fault impedance of that system. For a current-limiting fuse, the same definition is true for all currents below its specified current-limiting range. However, in the specified current-limiting range, the fuse limits the peak value of the available fault current to a lower value depending on the fuse size.

The mechanical forces in a system are proportional to the square of the peak current, hence, the peak let-through current may be an important consideration in certain applications. Peak let-through currents for typical current-limiting fuses are shown in Figure 6-1.

6.1.10 time-current characteristics (TCCs): Specifically, minimum-melting and total-clearing TCCs of fuses, which are plotted on a log-log scale with time on the *Y* axis and current on the *X* axis. The fuse operates within the area between the two curves. Minimum-melting curves are used for selecting fuses to provide maximum protection without operating unnecessarily. The total-clearing curves are used when upstream device coordination is required. Figure 6-2 and Figure 6-3 show typical minimum-melting and total-clearing characteristics for high-voltage fuses. The fuse characteristics are different for each fuse type and design and for each manufacturer. Thus, in a coordinated protective scheme, fuses cannot be substituted without first matching their characteristics, conducting a coordination study, or consulting the fuse manufacturer.

Copyright © 2001 IEEE. All rights reserved.

Copyright The Institute of Electrical and Electronics Engineers, Inc.
Provided by IHS under license with IEEE
No reproduction or networking permitted without license from IHS
Not for Resale

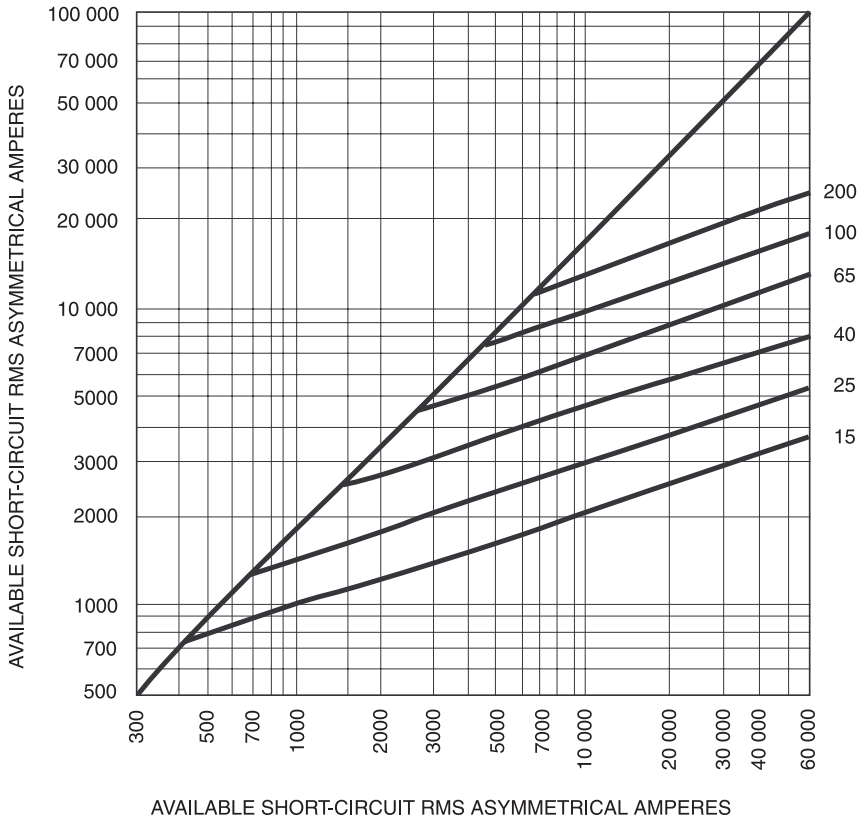

Figure 6-1—Peak let-through currents for medium-voltage current-limiting fuses

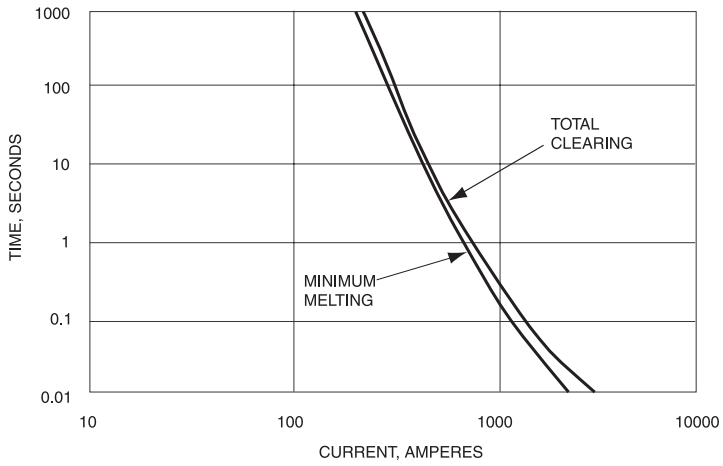

Figure 6-2—Typical TCC curves for a current-limiting fuse

Copyright © 2001 IEEE. All rights reserved.

Copyright The Institute of Electrical and Electronics Engineers, Inc.
Provided by IHS under license with IEEE
No reproduction or networking permitted without license from IHS
Not for Resale

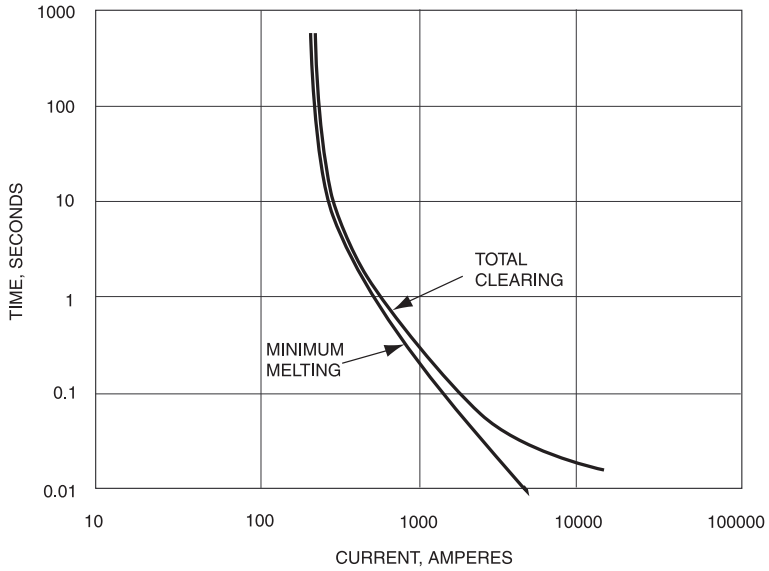

Figure 6-3—Typical TCC curves for an expulsion fuse

6.2 Fuse classification

IEEE Std C37.40-1993 defines high-voltage fuses as above 1000 V; therefore, the definition covers fuses used in both medium- and high-voltage systems. It also classifies fuses as power fuses and distribution fuses, depending on the intended location of the fuses in the power system. In addition, fuses may be classified for

— Outdoor application only, or
— Application indoors or in enclosures

Additionally, fuses using new technologies have been available since the early 1980s, but have not yet been addressed by standards.

6.2.1 Power fuses

According to ANSI C37.42-1996, a power fuse is identified by the following characteristics:

— Dielectric withstand [i.e., basic impulse insulation level (BIL)] strengths at power levels
— Application primarily in stations and substations
— Mechanical construction basically adapted to station and substation mountings

Power fuses have other characteristics that differentiate them from distribution fuses in that they are available in higher voltage ratings, higher continuous-current ratings, higher interrupting-current ratings, and in forms suitable for indoor and enclosure application and for all types of outdoor applications.

Copyright © 2001 IEEE. All rights reserved.

--`,,-`-`,,`,,`,`,,`---

Copyright The Institute of Electrical and Electronics Engineers, Inc.
Provided by IHS under license with IEEE
No reproduction or networking permitted without license from IHS
Not for Resale

A power fuse consists of a fuse support (commonly called a mounting) plus a fuse unit or, alternately, a fuse holder that accepts a refill unit or fuse link.

Power fuses are rated as E or R depending on their melting characteristics. They are defined as follows:

— *E rating*. The current-responsive element for ratings 100 A or below shall melt in 300 s at a root-mean-square (rms) current within the range of 200% to 240% of the continuous-current rating of the fuse unit, refill unit, or fuse link. The current-responsive element for ratings above 100 A shall melt in 600 s at an rms current within the range of 220% to 264% of the continuous-current rating of the fuse unit, refill unit, or fuse link.
— *R rating*. The fuse shall melt in the range of 15 s to 35 s at a value of current equal to 100 times the R number.

When interchanging E-rated fuses of one manufacturer with another, coordination should be carefully checked because the time-current characteristics (TCCs) may be different. The same guidance applies to R-rated fuses. E-rated fuses are available as both expulsion and current-limiting, and R-rated fuses are available only as current-limiting.

6.2.1.1 New designs of fuses

Power fuses employing new technology, such as vacuum or sulfur hexafluoride (SF_6) as the interrupting medium, have recently been developed. In general, these fuses have melting and clearing characteristics similar to expulsion fuses. Other new technology fuses feature built-in sensing and electronics to develop special melting characteristics. These fuses ordinarily carry current through a bus bar. When the built-in sensing calls for operation, current is transferred almost instantaneously to a current-limiting fuse section for interruption by physically separating the bus bar element sufficiently to prevent restrike from the system voltage and the transient impulse created during the current-limiting interruption process. Some designs can take a command from other protective systems located remotely from the fuse.

6.2.2 Distribution fuses

6.2.2.1 Distribution current-limiting fuses

According to IEEE Std C-37.40-1993, a distribution current-limiting fuse contains a fuse support and a current-limiting fuse unit and is identified by the following characteristics:

a) Dielectric withstand (BIL) strengths at distribution levels
b) Application primarily on distribution feeders and circuits
c) Operating voltage limits corresponding to distribution system voltages

The specification for current-limiting distribution fuses is detailed in ANSI C37.47-1981. Depending on the melting time characteristics, they may be given a C rating, which is defined as follows: The current-responsive element shall melt in 1000 s at an rms current within the range of 170% to 240% of the continuous-current rating of the fuse unit.

 Copyright © 2001 IEEE. All rights reserved.

Copyright The Institute of Electrical and Electronics Engineers, Inc.
Provided by IHS under license with IEEE
No reproduction or networking permitted without license from IHS Not for Resale

The C rating specifies but one point on the TCC curve. While interchanging a C-rated fuse of one manufacturer with another, coordination should be carefully checked because the TCCs may be different.

The current-limiting fuse unit may be a disconnecting type or it may fit into a set of clips. Some fuses rated up to 15.5 kV also have circuit interrupters so they can be used to disconnect a live circuit. The principle application is in underground distribution systems and they are used for the protection of pad-mounted transformers supplying residential areas or small commercial or industrial plants. Another application is in small, enclosed capacitor banks. Both the clip and disconnecting styles may be used to provide an open point on loop feeds.

Backup fuses and some general purpose and full range fuses are also used in overhead systems where current limitation is desired. These types are also applied as under-oil fuses in distribution transformers for the same reason. Because current-limiting fuses do not emit any exhaust, they are also used in enclosures or vaults. Special types are used for the protection of individual capacitors in outdoor capacitor banks.

6.2.2.2 Distribution fuse cutouts

According to IEEE Std C37.40-1993, a distribution fuse cutout is defined by the following characteristics:

a) Dielectric withstand (BIL) strength at distribution levels
b) Application primarily on distribution feeders and circuits
c) Mechanical construction basically adapted to pole or crossarm mounting, except for distribution oil-fused cutouts
d) Operating voltage limits corresponding to distribution system voltages

Characteristically, a distribution fuse cutout consists of a special insulating support and a fuse holder. The fuse holder, normally a disconnecting type, engages contacts supported on the insulating support and is fitted with a simple inexpensive fuse link (see Figure 6-4). This type of fuse is normally an expulsion fuse; the holder is lined with a gas-evolving material, historically bone fiber. Interruption of an overcurrent takes place within the fuse holder by the action of deionizing gases liberated when the lining is exposed to the heat of the arc established when the fuse link melts in response to an overcurrent.

Distribution fuse cutouts were developed many years ago for use in overhead distribution circuits. They are commonly applied on such circuits along with distribution transformers supplying residential areas or small commercial or industrial plants. Fuse cutouts provide protection to the distribution circuit by de-energizing and isolating a faulted transformer. They are also used for protecting pole-mounted capacitor banks used for power factor correction or voltage regulation.

ANSI C37.42-1996 details the specifications for the distribution cutouts and fuse links. Distribution fuse cutouts are available up to a continuous current of 200 A at 15 kV and up to 100 A at 38 kV. The maximum interrupting ratings, expressed in rms symmetrical amperes, are given in Table 6-2.

Copyright © 2001 IEEE. All rights reserved.

--`,,`-`-`,,`,,`,`,,`---

Copyright The Institute of Electrical and Electronics Engineers, Inc.
Provided by IHS under license with IEEE
No reproduction or networking permitted without license from IHS
Not for Resale

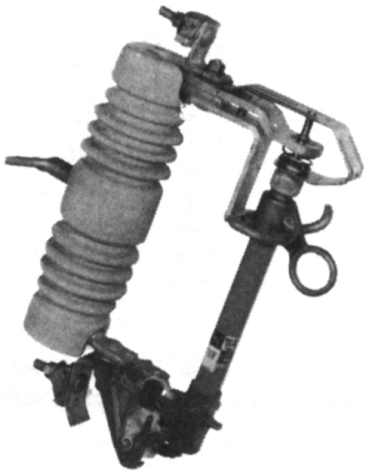

Figure 6-4—Open distribution fuse cutout, rated 100 A

Table 6-2—Maximum short-circuit interrupting ratings for distribution fuse cutouts

Nominal rating (kV)	Short-circuit interrupting rating (A, rms symmetrical)
4.8	12 500
7.2	15 000
14.4	13 200
25.0	8 000
34.5	5 000

ANSI C37.42-1996 also specifies TCCs for Type K and Type T (i.e., fast and slow, respectively) fuse links by means of three points on their time-current characteristic curves. Nonetheless, fuses of the same type, but from different manufacturers, cannot be used interchangeably from a time-current equivalency.

Overhead distribution cutouts, traditionally fitted with an expulsion fuse link, can now also be fitted with full-range current-limiting dropout fuses. These fuses are designed for mounting in an industry-recognized interchangeable cutout while offering all of the features of a current-limiting fuse and the visual indication of operation with the drop open design.

Copyright © 2001 IEEE. All rights reserved.

Copyright The Institute of Electrical and Electronics Engineers, Inc.
Provided by IHS under license with IEEE
No reproduction or networking permitted without license from IHS
Not for Resale

6.3 Current-limiting and expulsion power fuse designs

6.3.1 Current-limiting power fuses

Current-limiting power fuses generally consist of an insulating support (or mounting) and a fuse unit. Their principal applications are for protecting voltage (or potential) transformers (VTs), auxiliary transformers, power transformers, and capacitor banks, and in other applications where their high interrupting ratings and current-limiting properties are beneficial. Because current-limiting fuses do not emit any expulsion gases, they can be used in enclosures or vaults. At present, the application of these types of fuses is in areas where the voltage is between 2.4 kV and 34.5 kV nominal. The ratings for this style of fuse are given in Table 6-3.

Table 6-3—Maximum continuous-current and short-circuit interrupting rating for current-limiting power fuses

Rated maximum voltage (kV)	Continuous-current ratings (A) (maximum)	Short-circuit maximum interrupting ratings (kA, rms symmetrical)
2.75	225, 450,[a] 750,[a] 1350[a]	50.0, 50.0, 40.0, 40.0
2.75/4.76	450[a]	50.0
5.5	225, 400, 750,[a] 1350[a]	50.0, 62.5, 40.0, 40.0
8.25	125, 200[a]	50.0, 50.0
15.5	65, 100, 125,[a] 200[a]	85.0, 50.0, 85.0, 50.0
25.8	50, 100[a]	35.0, 35.0
38.0	50, 100[a]	35.0, 35.0

[a]Parallel fuses

Current-limiting power fuses have three features that have led to their extensive usage on medium-voltage power distribution circuits having high fault currents:

— Interruption of overcurrents is accomplished quickly without the expulsion of arc products or gases, as all the arc energy of operation is absorbed by the sand filler of the fuse and subsequently released as heat at relatively low temperatures. This feature enables the current-limiting fuse to be used indoors or in enclosures of small size. Furthermore, because no hot gases are discharged, only normal electric clearances need to be provided. The absence of expulsion by-products also permits the fuse to be immersed in dielectric fluid.
— The operation of a current-limiting fuse causes a reduction in the peak current through the fuse to a value less than the current available from the power system if the fault current greatly exceeds the continuous-current rating of the fuse. Such a

Copyright © 2001 IEEE. All rights reserved.

Copyright The Institute of Electrical and Electronics Engineers, Inc.
Provided by IHS under license with IEEE
No reproduction or networking permitted without license from IHS
Not for Resale

reduction in current reduces the stresses and possible damage to the circuit up to the fault or to the faulted equipment itself. For a current-limiting fuse used with a motor starter, the contractor is required only to have momentary current and to make current capabilities equal to the maximum let-though current of the largest current rating of the fuse that is used in the starter.

— Very high interrupting ratings are achieved by virtue of current-limiting action so that current-limiting power fuses can be applied on medium-voltage distribution circuits having very high short-circuit capacity. It should be noted that current-limiting fuses limit the let-through current by producing an arc voltage in excess of system voltage. This arc voltage may affect insulation coordination and the application of surge arresters (see Table 6-1 and 6.4.2.6).

Current-limiting power fuses are typically clip-mounted. Also available are current-limiting fuses that mount in industry-recognized fiber-lined and solid-material mountings used for power expulsion fuses described in 6.3.2.

6.3.2 Fiber-lined and solid-material expulsion power fuses

Expulsion power fuses generally consist of an insulating support (i.e., mounting) plus a fuse unit or, alternately, a fuse holder that accepts a refill unit or a replaceable fuse link.

One form of medium-voltage power fuses is the fiber-lined expulsion fuse, employing longer and heavier fuse holders (compared to fuse cutouts) to cope with higher circuit voltages and short-circuit interrupting requirements. Their operating characteristics are similar to the characteristics of a distribution fuse cutout except that the noise and emission of exhaust gases are greatly magnified as the design evolved to handle higher voltages and fault currents. Therefore, this type of fuse has been restricted to outdoor applications in substations. Fiber-lined expulsion power fuses are still used for protection of small and medium power transformers or substation capacitor banks. Table 6-4 gives the rating for fiber-lined expulsion power fuses.

The solid-material boric acid fuse was developed in the 1930s to improve the interrupting capacity of early expulsion fuses and for application inside buildings or enclosures. In this design, the deionizing action necessary to interrupt the fault current was not due to organic material, but solid boric acid molded into a dense lining for the interrupting chamber. The advantages of this design are listed below:

— For identical dimensions compared to fiber-lined fuse, the boric acid design can interrupt higher currents and be applied at higher voltages and with lower arc energies to reduce emission of gases.
— Because the gas liberated from the boric acid is noncombustible and highly deionized, the fuse design advantageously uses normal clearance distances required in air.
— During the interruption process, the heat of the arc liberates steam from the boric acid crystals. This steam can be condensed by an exhaust control device (commonly called an exhaust filter, condenser silencer, or snuffler). This feature allows use indoors and in small enclosures up to 34.5 kV.

Copyright © 2001 IEEE. All rights reserved.

--`,,`-`-`,,`,,`,`,,`---

Copyright The Institute of Electrical and Electronics Engineers, Inc.
Provided by IHS under license with IEEE
No reproduction or networking permitted without license from IHS Not for Resale

Table 6-4—Maximum continuous-current and short-circuit interrupting ratings for fiber-lined expulsion fuses

Rated maximum voltage (kV)	Continuous-current ratings (A) (maximum)	Maximum interrupting rating[a] (kA, rms symmetrical)
8.3	100, 200, 300, 400	12.5
15.5	100, 200, 300, 400	16.0
25.8	100, 200, 300, 400	20.0
38.0	100, 200, 300, 400	20.0
48.3	100, 200, 300, 400	25.0
72.5	100, 200, 300, 400	20.0
121.0	100, 200	16.0
145.0	100, 200	12.5
169.0	100, 200	12.5

[a]Applies to all continuous-current ratings.

These fuses are available in two styles:

— The fuse-unit style in which the fusible element, interrupting media, and arc-elongating spring assembly are all combined in an insulating tube and the entire unit being replaceable

— The fuse-holder and refill-unit style of which only the refill unit is replaced after operation

The fuse-unit style is principally used outdoors at transmission and subtransmission voltages (see Figure 6-5). However, fuses in this style are also available for use at distribution voltages up to 34.5 kV, in current ratings up to 400 A. The fuse units are specifically designed for outdoor pole-top or station mountings and for indoor mountings installed in metal-enclosed interrupter switchgear, indoor vaults, and pad-mounted gear. Indoor mountings incorporate an exhaust control device that contains most of the arc-interruption products and virtually eliminates noise accompanying a fuse operation. These exhaust control devices do not require a reduction of the fuse's interrupting rating.

Indoor mountings for use with fuse units up to 25 kV can be furnished with an integral hook-stick-operated load-current-interrupting device, thus providing single-pole live switching in addition to the fault-interrupting function provided by the fuse.

The ratings of the fuse-unit style are given in Table 6-5. The refill-unit style of fuse is used either indoors or outdoors at medium voltage, and its ratings are given in Table 6-6.

Copyright © 2001 IEEE. All rights reserved.

--`,,`-`-`,,`,,`,`,,`---
Copyright The Institute of Electrical and Electronics Engineers, Inc.
Provided by IHS under license with IEEE
No reproduction or networking permitted without license from IHS
Not for Resale

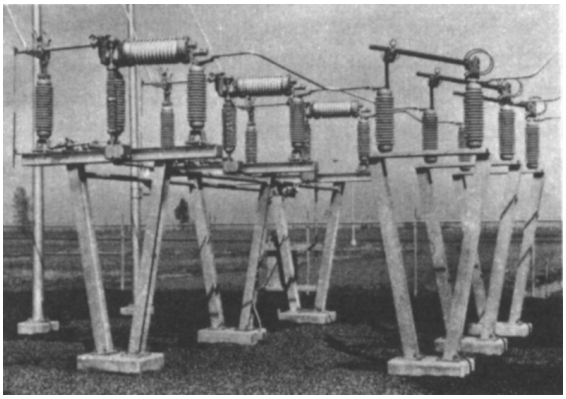

NOTE—The combination of interrupter switch with shunt trip device and solid-material power fuses provides three-phase protection for the power transformer.

Figure 6-5—Substation serving large industrial plant at 69 kV

Table 6-5—Maximum continuous-current and short-circuit interrupting ratings for solid-material power fuses (fuse units)

Rated maximum voltage (kV)	Continuous-current ratings (A) (maximum)	Short-circuit maximum interrupting ratings (kA, rms symmetrical)
5.5	400	25.0
17.0	200,400	14.0, 25.0
27.0	200	12.5
29.0	400	20.0
38.0	100, 200, 300	6.7, 17.5, 33.5
48.3	100, 200, 300	5.0, 13.1, 31.5
72.5	100, 200, 300	3.35, 10.0, 25.0
121.0	100, 250	5.0, 10.5
145.0	100, 250	4.2, 8.75

6.3.3 Newer types of fuses

Demands on electrical circuits have increased over the years with the growth of industrial and utility systems. In many instances fuse ratings covered by standards are no longer adequate. In some cases, the continuous-current requirements exceed existing fuse ratings. In other

Copyright © 2001 IEEE. All rights reserved.

Copyright The Institute of Electrical and Electronics Engineers, Inc.
Provided by IHS under license with IEEE
No reproduction or networking permitted without license from IHS
Not for Resale

Table 6-6—Maximum continuous-current and short-circuit interrupting ratings for solid-material power fuses (refill units)

Rated maximum voltage (kV)	Continuous-current ratings (A) (maximum)	Short-circuit maximum interrupting ratings (kA, rms symmetrical)
2.8	200, 400, 720[a]	19.0, 37.5, 37.5
4.8	200, 400, 720[a]	19.0, 37.5, 37.5
5.5	200, 400, 720[a]	19.0, 37.5, 37.5
8.3	200, 400, 720[a]	16.6, 29.4, 29.4
14.4	200, 400, 720[a]	14.4, 29.4, 29.4
15.5	200, 400, 720[a]	14.4, 34.0, 29.4
17.0	200, 400, 720[a]	14.0, 34.0, 25.0
25.8	200, 300, 540[a]	10.5, 21.0, 21.0
27.0	200, 300	12.5, 20.0
38.0	200, 300, 540[a]	8.45, 17.5, 16.8

[a]Parallel fuses

cases, the short-circuit interrupting capabilities of the fuses is insufficient. In still other instances, the low-current interrupting performance of fuses is a problem.

Fuse manufacturers responded to these needs in the early 1980s by combining or integrating new technologies with existing fuse designs. Thus, a variety of modern fuse-like devices have been developed, which make use of one or more of the following technologies: electronic sensing and triggering, pyrotechnics to increase the speed of interruption, and vacuum and magnetically enhanced SF_6 interruption. The use of analog and digital circuitry provides for a wide variety of TCC curves, and the inherent flexibility of these curves can result in improved selectivity in tight coordination schemes. These newer devices are described in 6.3.3.1 through 6.3.3.3.

6.3.3.1 Power fuses using vacuum and SF_6 interruption technology

6.3.3.1.1 Vacuum power fuses

Vacuum power fuses are an extension of vacuum power interrupters. A short fuse wire is held axially between two electrodes; hence there is a low arc voltage when the fuse wire is melted by the overcurrent. Thus the total-clearing characteristic is similar to an expulsion fuse. Interruption takes place at a current zero, and dielectric recovery is in high vacuum.

Copyright © 2001 IEEE. All rights reserved.

Copyright The Institute of Electrical and Electronics Engineers, Inc.
Provided by IHS under license with IEEE
No reproduction or networking permitted without license from IHS
Not for Resale

6.3.3.1.2 SF_6 power fuses

This type of fuse has an E characteristic. As the relatively short fuse wire melts, an arc is formed within an SF_6 chamber. This arc is commutated from the lower electrode to the housing. A coaxial coil is series-connected to the housing. The coil produces an axial magnetic field. It causes the arc to rotate radially between the housing as the first electrode and a central arc runner at the second electrode until a current zero is reached, at which point interruption takes place.

6.3.3.2 Self-triggering fuses that carry high continuous currents

In principle, this fuse design consists of two parallel fuses. The first has a short fusible element in series with a heavy copper conductor. This combination carries the continuous current. On overcurrents the fusible element melts and ignites a cutting charge, which cuts and folds back the copper conductor at several predetermined reduced sections. The arcs formed at these sections aid in the commutation of the overcurrent into the parallel current-limiting fuse. This fuse, in turn, melts quickly and interrupts the current in a manner consistent with the principle of a current-limiting fuse. The parallel fuse may be a full range, a general purpose, or a backup current-limiting fuse.

These fuses can carry high continuous currents up to 600 A. Their features are low continuous-current losses, current limitation with low let-through currents, and an ability to interrupt substantially lower currents than their continuous-current rating.

6.3.3.3 Triggerable fuses that interrupt upon command

In this category several novel fuse types can be distinguished. Their common denominator is a heavy copper conductor in parallel with a current-limiting fuse. The copper conductor carries the continuous current anywhere from 600 A to 3000 A.

In one design, upon command from the sensing or firing logic, which may be integral or remote, the conductor is severed by a chemical charge at predetermined sections. The arcs formed at these gaps aid in commutation of the current to the parallel fuse. Its element is designed to melt quickly and then interrupt the current like a current-limiting fuse.

In another design the fuse consists of a circuit interrupter in parallel with a current-limiting fuse in one body. The interrupter is actuated to open the circuit by a chemical actuator. While the interrupter is opening, the current is shunted to the parallel current-limiting fuse, which interrupts the current in a manner consistent with the principle of a current-limiting fuse. The interrupter contacts in the meantime move farther apart isolating the circuit. The interrupter assembly is replaced after each interruption.

These types of fuses are combined typically with a built-in current transformer (CT), an electronic sensing logic, which may respond to a predetermined current level, rate of rise of current, an integrated logic, or any combination of these, to provide a trigger signal for the opening of the copper conductor.

 Copyright © 2001 IEEE. All rights reserved.

Copyright The Institute of Electrical and Electronics Engineers, Inc.
Provided by IHS under license with IEEE
No reproduction or networking permitted without license from IHS Not for Resale

Some of these logic circuits are combined with additional elements that can delay or shift or even change the shape of the TCCs and thus form a family of TCCs, much like the functions of modern protective relays. The accuracy of these TCCs, along with fast clearing times, provides a narrow band between the minimum operating and total-clearing time, greatly enhancing the coordination possible with these devices.

The power for these logic devices may be derived from the CT or transmitted from ground by a small isolation transformer. The trigger signal may also be transmitted from ground to one or more phases by simple pulse transformers, if the sensing and firing logic is located at ground potential.

6.4 Application of high-voltage fuses

IEEE Std C37.48-1987 is a guide for the application, operation, and maintenance of high-voltage fuses, distribution enclosed single-pole air switches, fuse disconnecting switches, and accessories. It is an extensive document that details the procedures for fuse selection for both power and distribution systems. IEEE Std C37.40-1993 defines the fuse's current, voltage, frequency, and interrupting ratings. In selecting a fuse for a specific application, these ratings are used frequently and, therefore, are discussed in 6.4.1 and 6.4.2.

6.4.1 Fuse selection

6.4.1.1 Voltage ratings

In industrial applications, where the three-phase load is often delta connected, the maximum design voltage of the fuse should exceed the maximum line-to-line voltage of the system, regardless of the system grounding conditions.

For three-phase applications in grounded-wye-grounded-wye systems, some utilities make a practice of using current-limiting fuses rated for the line-to-ground voltage. This practice allows use of a smaller fuse that produces a lower arc voltage. Before using fuses with such ratings, a thorough evaluation is recommended based on the possible malfunction of these fuses in the event of an ungrounded phase-to-phase fault on a transformer secondary.

The current-limiting fuse functions by developing a back electromotive force, and in fuse designs using wire elements, this electromotive force is a function of its maximum rated voltage rather than the system voltage. In other words, care should be used in selecting the wire element current-limiting fuse voltage rating while considering the possible overvoltages (see Table 6-1) to match the system voltage insulating levels. If necessary, the fuse manufacturer should be consulted on the application of specific fuse types.

Both fiber-lined and solid-material expulsion power fuses are not voltage critical in that they can safely be applied at voltages less than their rated voltage with no detrimental effects. These fuses have a constant current-interrupting ability or, at best, a slightly increased current-interrupting ability when applied to systems operating one or more voltage levels below the fuse ratings.

Copyright © 2001 IEEE. All rights reserved.

Copyright The Institute of Electrical and Electronics Engineers, Inc.
Provided by IHS under license with IEEE
No reproduction or networking permitted without license from IHS
Not for Resale

6.4.1.2 Current ratings

In selecting a fuse, the continuous-current capability of the fuse should be equal to or higher than the maximum continuous current that might be expected to pass through the fuse. Therefore, in applications where the equipment being protected by the fuse may be overloaded (such as when a transformer is operated above its continuous rating, but within published short-time loading limits), the fuse's continuous-current rating should be selected on the basis of maximum anticipated overload current, not the rated current. Solid-material power fuses have continuous-overload capabilities, and the manufacturer should be consulted if using a fuse with a continuous-current rating less than the maximum continuous current required for the application is desired. Fuses of a higher current rating may be required for other reasons, such as to obtain coordination with other protective devices or to carry higher currents for shorter periods of time.

The continuous-current capability of fuses is determined at 25 ßC or 30 ßC and can be increased or decreased in applications where the ambient temperature is above or below these values. The fuse manufacturer should be contacted for information.

Transient currents of duration approaching the fuse melting time may physically damage some fuse types and cause a reduction in melting time characteristics. Therefore, when selecting these fuses for particular installations, proper allowance should be made for expected short-term conditions. The fuse manufacturer may be consulted for providing the rules for the "no-damage" boundary for its design (if any).

In the more sophisticated distribution systems, continuity of service is achieved by automatically switching the loads from a faulted circuit or transformer to another circuit or transformer until repairs or replacement can be made. It is imperative to consider the effect of such overloads on the melting TCC of the fuse as it affects selectivity with other overcurrent protective devices.

Tools for use in selection of the various fuse types are available from fuse manufacturers. TCC curves, preloading adjustment, and ambient temperature adjustment factors are provided for each fuse type. In addition, overload capability data for expulsion fuses, and peak let-through current curves, total-clearing I^2t charts, and peak arc voltage data are provided for current-limiting fuses.

6.4.1.3 Interrupting rating

The interrupting rating of a fuse is expressed in rms symmetrical amperes. Standards call for testing power fuses at an *X*/*R* ratio not less than 10, so the asymmetrical rating is 1.55 times the symmetrical rating. (Some manufacturers test at an *X*/*R* ratio greater than 10, for an asymmetry factor of 1.6.) If a power fuse is to be applied in the unusual case where the *X*/*R* ratio exceeds 15 (or 20), the manufacturer should be consulted for derating factors. Some manufacturers also publish higher interrupting ratings at lower *X*/*R* ratios.

Distribution fuse cutouts are applied on overhead lines where the *X*/*R* ratio is lower than for cable systems or large substation applications. Therefore, they are tested at an *X*/*R* ratio of 8

Copyright © 2001 IEEE. All rights reserved.

--`,,`-`-`,,`,,`,`,,`---

Copyright The Institute of Electrical and Electronics Engineers, Inc.
Provided by IHS under license with IEEE
No reproduction or networking permitted without license from IHS Not for Resale

or 12 (corresponding to an asymmetry factor of 1.4 or 1.5) depending on the voltage and interrupting ratings. Most manufacturers publish data for increasing or decreasing the rms symmetrical interrupting ratings of distribution cutouts for lower or higher *X*/*R* ratios.

Equivalent three-phase symmetrical interrupting ratings in MVA are given as a reference for comparison with circuit breaker capabilities. Also, simplified short-circuit duty requirements can be calculated in these terms.

In selecting a fuse for proper interrupting rating, one requirement, of course, is that the fuse be adequate for the short-circuit duty required. Generally, however, other requirements such as high load current or a desire for current limitation ensure that the fuses used have inherently more interrupting capability than the system requires.

6.4.2 Special application considerations

The application considerations of high-voltage fuses differ depending on whether they are used for system protection or protection of equipment such as power transformers, distribution transformers, motors, and capacitors.

6.4.2.1 System protection

6.4.2.1.1 General

From the basic concept of overcurrent protection applicable to medium- and high-voltage distribution systems used in industrial plants and commercial buildings, it becomes apparent that the principle functions of overcurrent protective devices are to detect fault conditions and interrupt these high values of overcurrent quickly. Fuses provide fast clearing of high-magnitude fault currents, usually on the order of one cycle or less. Their secondary function is to act as backup overcurrent protection if the next overcurrent device closer to the fault either fails to operate due to a malfunction or operates too slowly due to incorrect (i.e., higher) rating or settings.

High-voltage power fuses have the capabilities and characteristics to provide this vital overcurrent protection for virtually all types and sizes of distribution systems ranging from a simple radial circuit where power is supplied at medium voltage with a transformer to provide utilization voltage, up to complex primary-selective circuits supplying feeders connected to a number of transformer-primary substations (see Figure 6-6 and Figure 6-7). Such fuses, used with load-interrupter switches, may be applied outdoors, in vaults, or in metal-enclosed switchgear.

The use of more economical fuses (as compared to circuit breakers) allows segmentation of radial systems and protection of individual loads. This feature can improve service reliability by interrupting the least amount of load in order to remove a faulted segment. Fuses are widely used in switchgear buses where their fast operating times (less than 0.5 cycle for current-limiting and newer technology fuses when operating in their current-limiting range or 1 cycle for power fuses on high-current faults) reduce damage to faulted equipment and stresses on the system feeding the fault, including motors. Current-limiting fuses produce

Copyright © 2001 IEEE. All rights reserved.

Copyright The Institute of Electrical and Electronics Engineers, Inc.
Provided by IHS under license with IEEE
No reproduction or networking permitted without license from IHS
Not for Resale

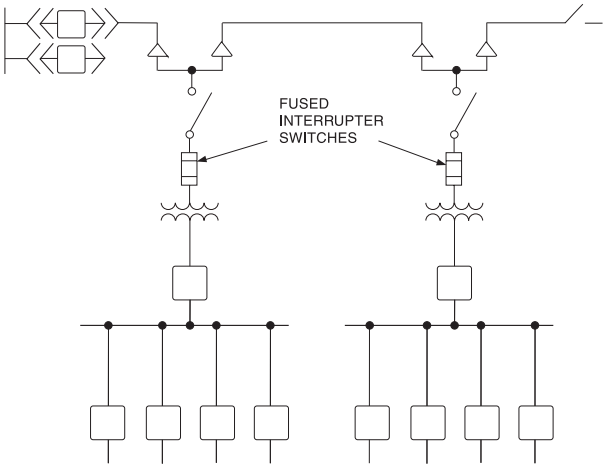

Figure 6-6—One-line diagram of simple radial system

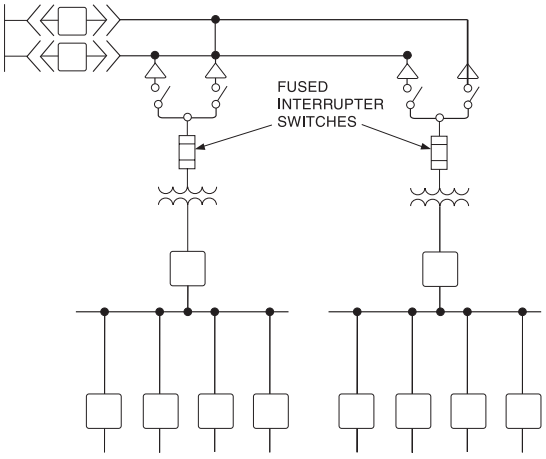

Figure 6-7—One-line diagram of typical primary-selective system

lower voltage dips (e.g., in magnitude and duration) due to their current-limiting operation and, as a result, may allow equipment connected to adjacent circuits to ride through the fault-clearing operation. Fuses discussed in 6.3.3 are especially suitable for main-bus application because of their high continuous-current ratings and the coordination achievable with their inverse curves and fast clearing times.

6.4.2.1.2 Selectivity

The minimum-melting TCC curve indicates the time that a fuse carries a designated current before operating (assuming no initial load). Figure 6-8 illustrates a typical family of minimum-melting TCCs for current-limiting power fuses. Figure 6-9 shows the minimum-

 Copyright © 2001 IEEE. All rights reserved.

Copyright The Institute of Electrical and Electronics Engineers, Inc.
Provided by IHS under license with IEEE
No reproduction or networking permitted without license from IHS Not for Resale

melting TCCs for a representative line of solid-material power fuses. These curves should indicate the tolerance in terms of time or current. These curves should further indicate whether the fuse is non-damageable, that is, whether it can carry without damage the designated current for a time that immediately approaches the time indicated by the curve. Total-clearing TCC curves for these two types of fuses are shown in Figure 6-10 and Figure 6-11, respectively.

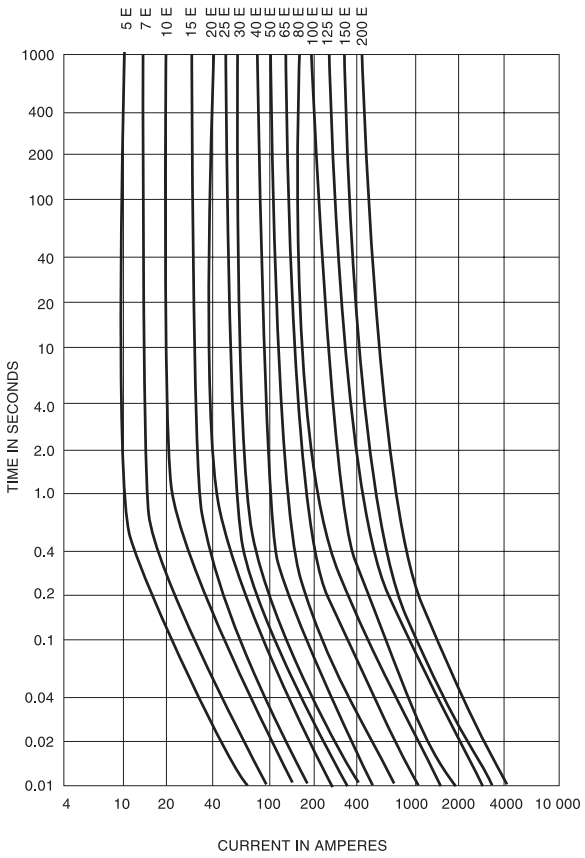

Figure 6-8—Typical minimum-melting TCC curves for high-voltage current-limiting power fuses

Because the minimum-melting TCC curve is based on no initial load current through the fuse, this curve should be modified to recognize the reduction in melting time due to load current. This modification permits more precise coordination with other overcurrent protective devices nearer the load. Further aids are available in the form of curves that show the temporary reduction in melting characteristics if the fuse has been carrying a heavy emergency overload, or if the fuse has been applied in a location with an exceptionally high ambient temperature.

Copyright © 2001 IEEE. All rights reserved.

Copyright The Institute of Electrical and Electronics Engineers, Inc.
Provided by IHS under license with IEEE
No reproduction or networking permitted without license from IHS
Not for Resale

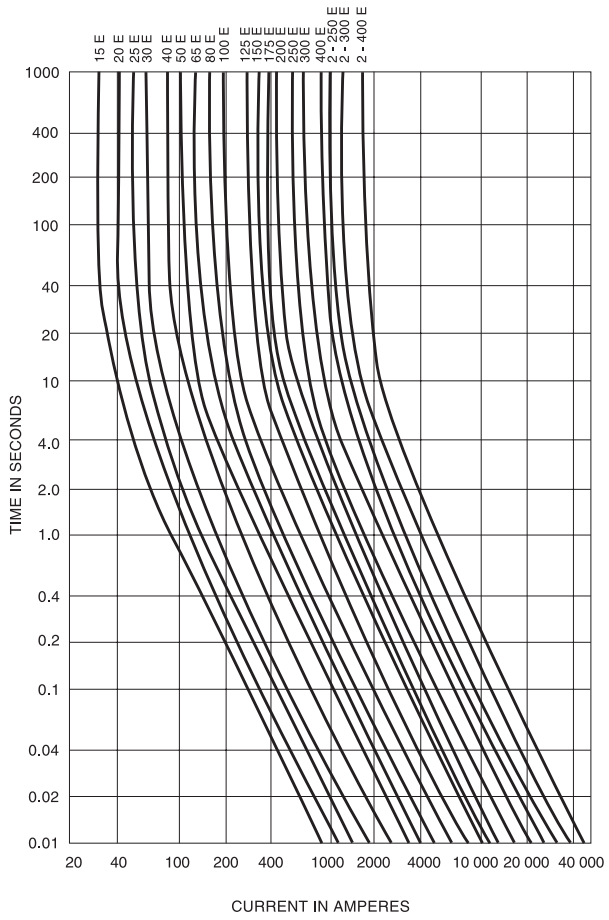

Figure 6-9—Typical minimum-melting TCC curves for medium and high-voltage solid-material power fuses

If the fuse is susceptible to a permanent change in melting TCC when exposed to currents for times less than the minimum-melting time, the manufacturer's published "safety-zone" allowance or "setback curve" should be used in any coordination scheme.

Fuses discussed in 6.3.3.3, which can interrupt upon command, have small tolerances, are fast-acting at high fault currents, are nondamageable, and do not require modification of the curves due to pre-loading or ambient temperature. Nonetheless, they should not be installed in locations where the ambient temperature exceeds 55 ßC without consulting the manufacturer.

Maximum system protection and maximum backup protection for load-side devices require use of the smallest ampere rating of fuse that meets the requirements stated in 6.4.1.2. In addition, the cumulative transformer magnetizing inrush of all transformers downstream of the fuse should be considered. Fuses having a small tolerance and utilizing nondamageable

Copyright © 2001 IEEE. All rights reserved.

Copyright The Institute of Electrical and Electronics Engineers, Inc.
Provided by IHS under license with IEEE
No reproduction or networking permitted without license from IHS
Not for Resale

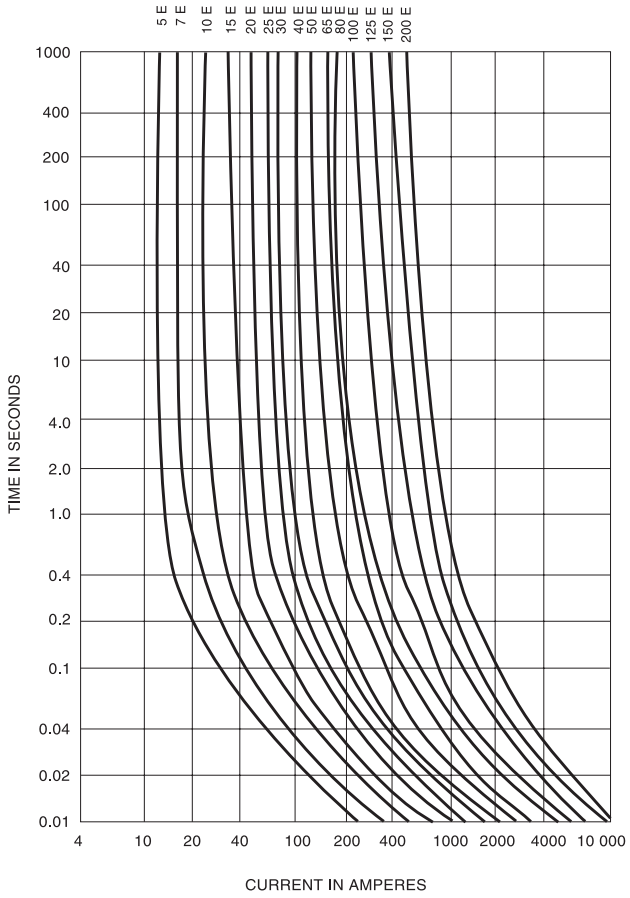

Figure 6-10—Typical total-clearing TCC curves for high-voltage current-limiting power fuses (see Figure 6-8)

elements are best suited to accurate selective application. The effort required to make a precise selection of fuse ampere rating and speed characteristics is small compared to the benefits obtained in overall system overcurrent protection.

6.4.2.2 Transformer protection

6.4.2.2.1 Inrush points

In selecting fuses for transformer protection, the following practices are recommended to avoid nuisance fuse operation:

a) When a transformer is energized, magnetizing inrush current flows through the fuses. When selecting the current rating, the minimum-melting TCC (adjusted for pre-load, ambient temperature, and, if applicable, damageability) should lie to the right of the magnetizing inrush points. The rules of thumb for these points are 12 times the full-

Copyright © 2001 IEEE. All rights reserved.

Copyright The Institute of Electrical and Electronics Engineers, Inc.
Provided by IHS under license with IEEE
No reproduction or networking permitted without license from IHS
Not for Resale

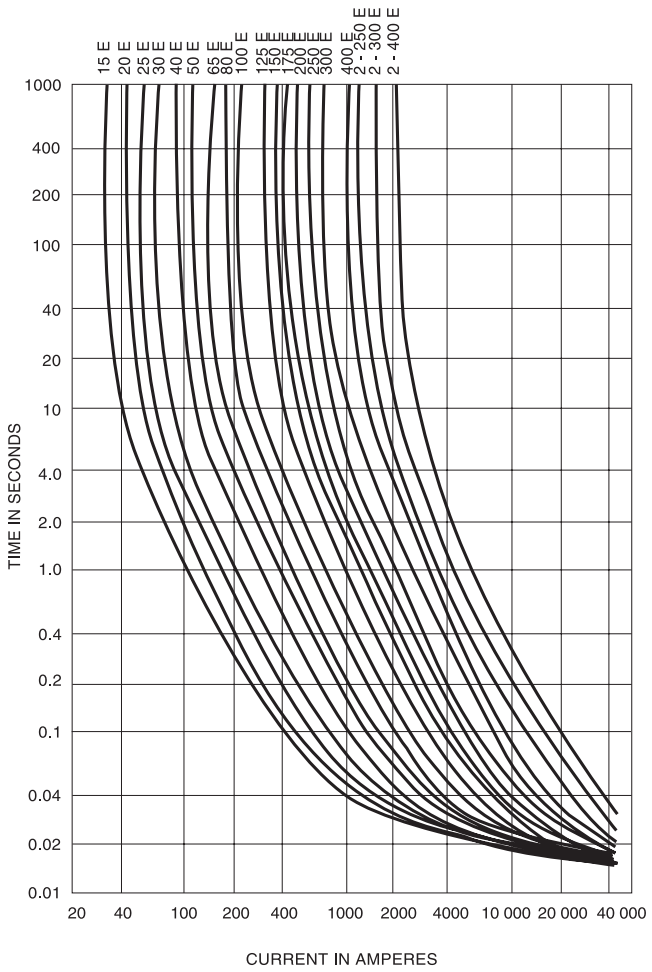

Figure 6-11—Typical total-clearing TCC curves for high-voltage solid-material power fuses (see Figure 6-9)

load current of the transformer at 0.1 s and 25 times at 0.01 s for unloaded transformers.

b) Magnetizing inrush currents may be slightly higher when transformers carrying load current are subjected to a momentary interruption. In addition, under these circumstances, fuses will have been carrying the load and will melt slightly faster than when at room temperature. As a rule of thumb, the integrated heating effect of this inrush should be considered as that of a current having a magnitude of 10 to 14 times the full-load current for a duration of 0.1 s and 25 to 28 times the full-load current for a duration of 0.01 s. This effect is referred to as hot-load pickup.

c) Cold-load pickup can be a concern if fuses are sized based on load diversity, i.e., the utility practice of sizing transformers, conductors, and protective devices such as fuses to handle the highest normal load current to be expected, rather than the entire

Copyright © 2001 IEEE. All rights reserved.

Copyright The Institute of Electrical and Electronics Engineers, Inc.
Provided by IHS under license with IEEE
No reproduction or networking permitted without license from IHS
Not for Resale

connected load. This practice can cause problems in re-energizing a circuit after a prolonged (e.g., 4 h) interruption. In this case, all air conditioners or all electric heating devices start up at the same time rather than randomly. This condition may result in a current profile that is equivalent to six times the transformer full-load current for 1 s, three times for 10 s, and two times for 15 min. It is unusual for cold-load pickup to be a problem on industrial and commercial power systems where the diversity of many small air conditioners is not a factor and where large loads are energized one at a time following a prolonged power interruption. However, if all load on a transformer is picked up at once by closing the primary or main secondary switching device, a similar inrush will occur. If this event is expected, the fuse should be selected so that its minimum-melting curve is to the right of the points mentioned in 6.4.2.2, plus any allowances recommended by the manufacturer for a safety zone.

d) For proper coordination, the secondary protection system's total-clearing characteristics (e.g., secondary fuses or breakers) converted to the primary side should also lie to the left of the primary fuse's minimum-melting curve.

e) Considering the above inrush points, comparison of the steep minimum-melting TCC of a current-limiting fuse and the curves of an expulsion fuse shows which one should give better protection than the other for faults on the secondary side of the transformer. This comparison is particularly true for arcing phase-to-ground faults where the fault current may be as low as 40% of the current for a bolted fault.

6.4.2.2.2 Through-fault protection

A primary fuse selected for transformer protection should be able to carry overload currents safely. In addition, it should be large enough to coordinate with secondary-side devices. The upper limit for the size of fuse selected is a function of the NEC rule that the rating not exceed three times the transformer's full-load rating. Fuses can provide excellent protection to the transformer for such faults when properly selected. Chapter 11 discusses transformer protection in detail. Because its zone of protection extends only through secondary-side protective devices, the primary fuse should be selected on the basis of the infrequent fault protection curve. Frequent faults on the lines emanating from the secondary bus are to be cleared by feeder protective devices.

6.4.2.2.3 Overload protection

Precise transformer overload protection is commonly required. One means is the use of internal circuit breakers. Another method for overload protection is available for pad-mounted transformers, which commonly use bayonet expulsion fusing. Rather than using conventional copper and tin bayonet fuse elements, which do not react to the transformer oil temperature, optional eutectic elements may be used to provide both overcurrent and overload protection. Unlike conventional fuse elements, the eutectic element senses both the thermal effect of current flow and the oil temperature rise. The oil temperature is due to core and coil losses combined with ambient temperature conditions. The eutectic element melts at a predetermined temperature and opens the circuit. Thus, the transformer insulation system is protected from extreme temperatures that significantly reduce its operating life.

Copyright © 2001 IEEE. All rights reserved.

Copyright The Institute of Electrical and Electronics Engineers, Inc.
Provided by IHS under license with IEEE
No reproduction or networking permitted without license from IHS
Not for Resale

6.4.2.2.4 Two-fuse concept protection

The two-fuse concept is commonly applied to pad-mounted transformers. This protection scheme consists of a partial-range current-limiting fuse in series with an expulsion fuse housed in a bayonet through-wall holder. The partial-range current-limiting fuse is sized to clear high-current, low-impedance internal faults, and its field accessibility is optional. Conversely, the field accessible expulsion fuse is sized to clear lower current, external secondary faults and/or sustained overloads. Using the two-fuse concept provides assurance that transformers with internal faults remain permanently isolated and allows differentiation between internal and external faults. Typically, overcurrent conditions that transformers experience are of lower magnitude and only involve replacement of the accessible expulsion fuse element assembly.

6.4.2.3 VT protection

The fuses applied for voltage transformer (VT) protection should withstand inrush currents during the transformer energization. The VT manufacturer provides these data in the form of I^2t for their products. Fuses are chosen for protection, depending on the method of transformer connection. Figure 6-12 shows two widely used methods of connection: Class I and Class II. For Class I connections, the inrush current of one transformer passes through the fuse, and hence the fuse's melting I^2t should be greater than 1.5 times the I^2t of the inrush of the transformer. For Class II connections, the inrush currents of two transformers pass through the fuse. In this case, the fuse's melting I^2t should be greater than 4.5 times the I^2t of the inrush of the transformer. With this method of selection, nuisance blowing of fuses can be avoided.

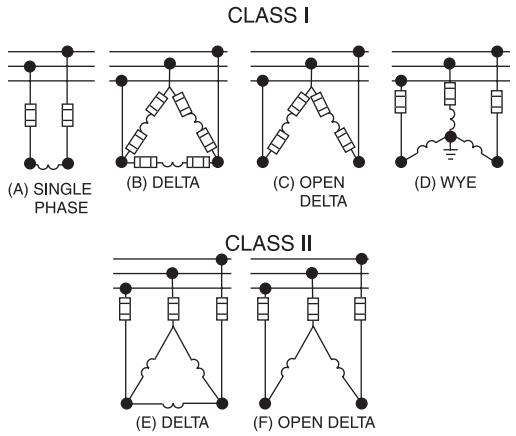

NOTE—Class I connections are preferred; Class II connections are sometimes employed.

Figure 6-12—Various methods of connecting VTs to bus, showing fuse positions

When possible damage to other equipment or injury to personnel, due to delayed clearing of a failed transformer, is an important consideration, Class II connection should be avoided if

Copyright © 2001 IEEE. All rights reserved.

Copyright The Institute of Electrical and Electronics Engineers, Inc.
Provided by IHS under license with IEEE
No reproduction or networking permitted without license from IHS
Not for Resale

this connection gives rise to a higher fuse ampere rating than the Class I connection. The inrush I^2t for the transformers varies rapidly with increases in applied voltage; in requesting the I^2t from the transformer manufacturer, the voltage specified should be the maximum expected in service.

In some applications, particularly cable circuits, the inherent capacitance of the circuit may give rise to a discharge current through the primaries of the connected VTs when the circuit is disconnected from the bus. The magnitude and duration of this discharge current may be calculated from the circuit constants and, in some instances, may result in blowing the primary fuse. This possibility is a particular concern where the VTs can be suddenly isolated from the ac source along with long cable runs or capacitor banks.

6.4.2.4 Capacitor protection

Ordinarily, fuses used for the protection of capacitor banks and individual capacitor units are furnished by the manufacturer of the capacitor bank. Selection of these fuses is complex and involves consideration of the possibility of capacitor-unit rupture, inrush currents during switching operations, use of a continuous-current rating large enough to accommodate higher-than-expected currents due to harmonics and overvoltages, and the amount of energy that may be fed into a faulted capacitor unit from adjacent units on the same phase. If replacing these fuses with fuses of a different manufacture or type is necessary, all these factors should be carefully considered when selecting the new fuse.

6.4.2.5 Motor-circuit protection

6.4.2.5.1 Design and selection

Fuses specifically designed for motor-circuit protection are different from the other types of fuses. These motor-circuit fuses are subjected to inrush currents constantly during the start and stop of the motors. Hence the element design is different and takes the mechanical stresses produced by the inrush currents. They are usually R-rated backup power fuses. They are applied in series with low-interrupting-capacity contactors or vacuum interrupters located in motor controllers. These series interrupters are controlled by thermal overload relays or other motor protection relays (see Figure 6-13). The fuse size selected should allow for short-circuit protection provided by the fuse and overload protection provided by the motor overload relays. The following data are required for proper application:

— Motor full-load current rating
— Motor locked-rotor current
— Overload relay TCCs
— R-rated fuse's minimum-melting characteristics

6.4.2.5.2 Coordination of fuses and motor starters

In applying fuses for motor protection circuits, the fuse and motor-starter components should be coordinated so that the fuse is protected against unnecessary operation during motor starting or expected overload conditions. A typical motor branch circuit, and the connected protective devices, is shown in Figure 6-14. In this example, a 2300 V, 500 Hp, 370 kW,

Copyright © 2001 IEEE. All rights reserved.

Copyright The Institute of Electrical and Electronics Engineers, Inc.
Provided by IHS under license with IEEE
No reproduction or networking permitted without license from IHS
Not for Resale

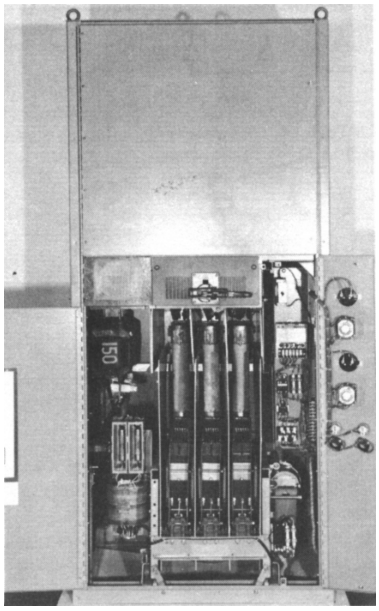

Figure 6-13—High-voltage R-rated fuses in drawout motor starter, rated 180 A

three-phase motor is assumed with a full-load current of 125 A and a locked-rotor current of 750 A. It is being started with a suitable contactor having thermal overload relays. The overload relay is to be sized at 125% of motor full-load current, and system voltages could vary enough to cause a 10% increase in locked-rotor current. Taking these percentages into consideration, the overload relays were selected at a rated value of 155 A in terms of the primary current in the CTs, and the adjusted locked-rotor current is 825 A. The coordination of the fuse and relay characteristics is shown in Figure 6-15. In this example, the thermal relay characteristic crosses the minimum-melting characteristic of a 6R fuse at 620 A, 9R fuse at 980 A, and a 12R fuse at 1350 A. Because the 9R and 12R fuses have the crossover current greater than the 825 A of adjusted locked-rotor current for this motor, both are suitable for this condition. Because 9R is the smallest fuse that coordinates with the relay, it is selected to limit the energy let-through to faults and minimize the damage to the protected circuit.

6.4.2.6 Coordination of fuses and surge arresters

Surge arresters are overvoltage devices that present a low resistance when the voltage exceeds a predetermined value, and a high resistance during normal operation. Thus they clamp the overvoltage to a desired level by diverting the excess energy to earth. Because the arresters do not have large mass, a thermal limit absorbs the energy during the overvoltage period.

The current-limiting fuse limits the peak let-through current by producing a high arc voltage across its terminals (as high as three times the voltage rating of the fuse). This peak arc voltage, lasting about 100 μs to 500 μs, is in excess of the system peak voltage and may cause

Copyright © 2001 IEEE. All rights reserved.

Copyright The Institute of Electrical and Electronics Engineers, Inc.
Provided by IHS under license with IEEE
No reproduction or networking permitted without license from IHS
Not for Resale

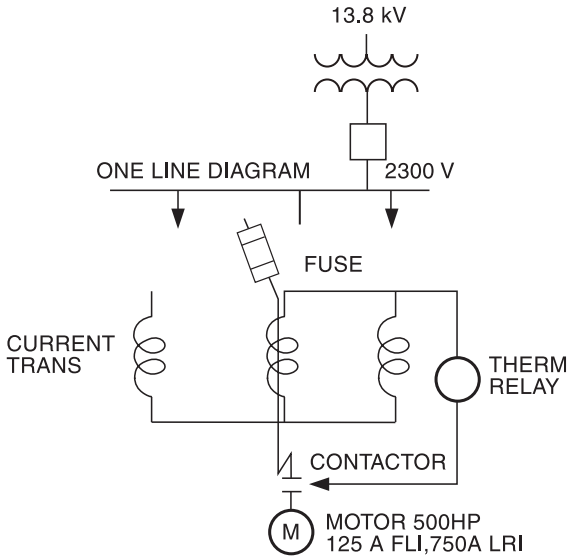

Figure 6-14—One-line diagram of motor branch circuit and connected devices

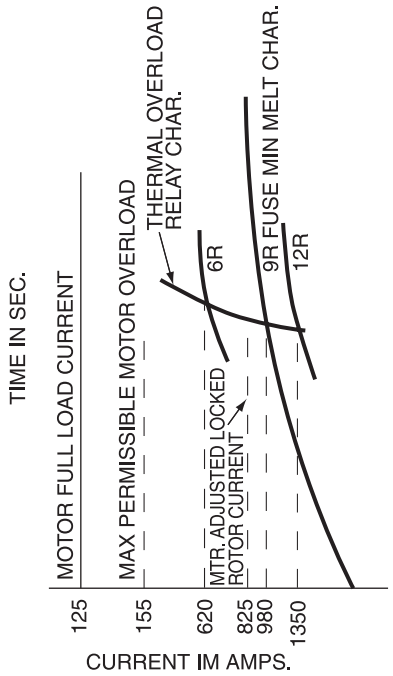

Figure 6-15—Illustration of a method of checking coordination of current-limiting fuses and motor overload relays in a motor branch circuit

Copyright © 2001 IEEE. All rights reserved.

Copyright The Institute of Electrical and Electronics Engineers, Inc.
Provided by IHS under license with IEEE
No reproduction or networking permitted without license from IHS
Not for Resale

surge arresters on the source side to operate. ANSI C37.46-1981 and ANSI C37.47-1981 specify the limits on peak arc voltages for current-limiting fuses (see Table 6-1).

6.4.2.6.1 Coordination of surge arresters and current-limiting fuses

When current-limiting fuses and surge arresters are used adjacent to each other, care should be taken to prevent failure of either device.

When the arrester is on the source side of a current-limiting fuse, the high arc voltage caused by an operation in the current-limiting mode on some types of fuses may cause the arrester to go into the conducting mode. Some concern exists that energy that the arrester needs to absorb during operation, if it occurs, is large enough that eventful (or catastrophic) arrester failure could occur. However, based on fuse and arrester standards and characteristics, thorough reviews of the application, and numerous tests, it has been concluded that the use of arresters in this location may be done without undue risk. The probability of damage is low as long as devices that conform to present standards are used. If a concern exists for a particular application, the fuse and arrester manufacturers should be consulted.

When the surge arrester is located on the load side of a current-limiting fuse, the fuse operation under current-limiting mode should not affect the surge arrester. But this method may lead to fuse operation due to surge arrester operation because the I^2t of the lightning current discharged by the arrester also flows through the fuse. The fuse operates if the I^2t content in the surge current is greater than the fuse's minimum-melt I^2t. In some instances, when the I^2t is just below the fuse's minimum-melt I^2t, element damage may occur that might cause the fuse to fail subsequently. The fuse selected using this method should have a melting I^2t higher than the maximum estimated lightning surge value at this location. Thus, nuisance fuse operation can be minimized.

6.4.2.6.2 Coordination of surge arresters and expulsion fuses

Solid-material power fuses and fiber-lined cutouts do not produce high arc voltages, so no need exists for coordination with surge arresters on the source side. Due to the inversity of their melting curves, fuses rated 15E or larger normally do not operate due to current through a surge arrester on the load side of the fuse.

6.4.2.7 Special application of new technologies

Some of the new designs of power fuses are unique in combining many of the features of both triggered relays and fuses. Like relays, they can be furnished with a variety of response characteristics including instantaneous, time delay, inverse, and combinations of these characteristics. At high current levels, they interrupt in a current-limiting mode within a fraction of a cycle. They are available with high continuous-current ratings of 400 A, 600 A, 1200 A, 2000 A, and 3000 A. This combination makes them especially suitable for a number of applications not attainable with other devices:

— *Service entrance protection*. The accuracy and special response characteristics allow coordination with line-side and load-side devices not achievable with other forms of

 Copyright © 2001 IEEE. All rights reserved.

Copyright The Institute of Electrical and Electronics Engineers, Inc.
Provided by IHS under license with IEEE
No reproduction or networking permitted without license from IHS Not for Resale

protection. In addition, they are available in higher continuous ratings than other fuses.

— *Feeder protection*. The accuracy and special response characteristics allow coordination with line-side and load-side devices not achievable with other forms of protection.

— *Bus tie protection*. The high continuous-current rating and fast response allow paralleling two sources without subjecting feeder protective equipment to excessive fault currents.

— *Reactor bypass*. Reactors used to limit fault current introduce losses and voltage regulation problems to the system. A triggerable power fuse can be used to bypass a reactor, carrying normal load current and transferring fault current to the reactor for limitation.

— *Protection of underrated equipment*. The addition of capacity to electrical systems sometimes results in raising the available fault-current level above the rating of equipment. Triggerable power fuses can reduce the potential let-through current to levels within the equipment ratings.

6.5 References

This recommended practice shall be used in conjunction with the following standards. When the following standards are superseded by an approved revision, the revision shall apply.

ANSI C37.42-1996, American National Standard Specification for High Voltage Expulsion Type Distribution Class Fuses, Cutouts, Fuse Disconnectin Switches, and Fuse Links.[3]

ANSI C37.44-1981 (Reaff 1992), American National Standard Specification for Special Distribution Oil Cutouts and Fuse Links.

ANSI C37.46-1981 (Reaff 1992), American National Standard Specifications for Power Fuses and Fuse Disconnecting Switches.

ANSI C37.47-1981 (Reaff 1992), American National Standard Specifications for Distribution Fuse Disconnecting Switches, Fuse Supports, and Current-Limiting Fuses.

ANSI C37.53.1-1989 (Reaff 1996), American National Standard Specification for Switchgear—High-Voltage Current Motor-Starter Fuses.

[3]ANSI publications are available from the Sales Department, American National Standards Institute, 11 West 42nd Street, 13th Floor, New York, NY 10036, USA (http://www.ansi.org/).

Copyright © 2001 IEEE. All rights reserved.

Copyright The Institute of Electrical and Electronics Engineers, Inc.
Provided by IHS under license with IEEE
No reproduction or networking permitted without license from IHS
Not for Resale

IEEE Std C37.40-1993, IEEE Standard Service Conditions and Definitions for High-Voltage Fuses, Distribution Enclosed Single-Pole Air Switches, Fuse Disconnecting Switches, and Accessories.[4]

IEEE Std C37.41-2000, IEEE Standard Design Tests for High-Voltage Fuses, Distribution Enclosed Single-Pole Air Switches, Fuse Disconnecting Switches, and Accessories.

IEEE Std C37.48-1997, IEEE Guide for Application, Operation, and Maintenance of Hi-Voltage Fuses, Distribution Enclosed Single-Pole Air Switches, Fuse Disconnecting Switches, and Accessories.

6.6 Bibliography

[B1] ANSI C84.1-1995, American National Standard for Electric Power Systems And Equipment—Voltage Ratings.

[B2] IEC 291-1969, Fuse Definitions.[5]

[B3] IEEE Std C37.100-1992, IEEE Standard Definitions for Power Switchgear.

[B4] NEMA SG 2-1981, High-Voltage Fuses.[6]

[B5] NFPA 70-1999, National Electrical Code® (NEC®).[7]

[4]IEEE publications are available from the Institute of Electrical and Electronics Engineers, 445 Hoes Lane, P.O. Box 1331, Piscataway, NJ 08855-1331, USA (http://standards.ieee.org/).

[5]IEC publications are available from the Sales Department of the International Electrotechnical Commission, Case Postale 131, 3, rue de Varembé, CH-1211, Genève 20, Switzerland/Suisse (http://www.iec.ch/). IEC publications are also available in the United States from the Sales Department, American National Standards Institute, 11 West 42nd Street, 13th Floor, New York, NY 10036, USA.

[6]NEMA publications are available from Global Engineering Documents, 15 Inverness Way East, Englewood, CO 80112, USA (http://global.ihs.com/).

[7]The NEC is published by the National Fire Protection Association, Batterymarch Park, Quincy, MA 02269, USA (http://www.nfpa.org/). Copies are also available from the Institute of Electrical and Electronics Engineers, 445 Hoes Lane, P.O. Box 1331, Piscataway, NJ 08855-1331, USA (http://standards.ieee.org/).

 Copyright © 2001 IEEE. All rights reserved.

--`,,`,,`,,`,,`,,`,,`---

Copyright The Institute of Electrical and Electronics Engineers, Inc.
Provided by IHS under license with IEEE
No reproduction or networking permitted without license from IHS Not for Resale

Chapter 7
Low-voltage circuit breakers

7.1 General

National Electrical Code® (NEC®) (NFPA 70-1999)[1] defines a circuit breaker as "a device designed to open and close a circuit by non-automatic means and to open the circuit automatically on a predetermined overcurrent without damage to itself when properly applied within its rating." Low-voltage circuit breakers are further classified by IEEE Std C37.100-1992 as

— Molded-case circuit breakers (MCCBs) (each assembled as an integral unit in a supporting and enclosing housing of insulating material)
— Low-voltage power circuit breakers (LVPCBs) (used on circuits rated 1000 V ac and below or rated 3000 V dc and below, but not including MCCBs)

Figure 7-1a and Figure 7-1b illustrate typical constructions.

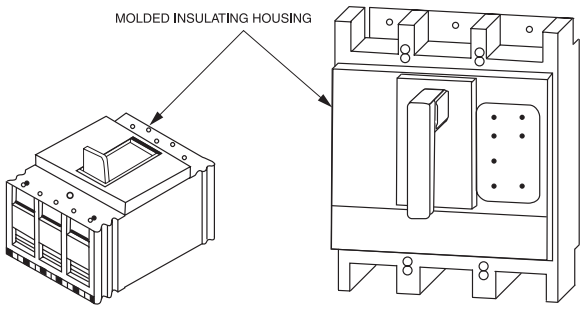

Figure 7-1a—MCCB

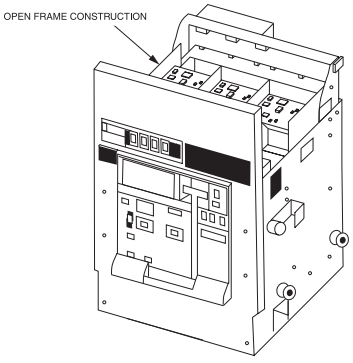

Figure 7-1b—LVPCB

[1]Information on references can be found in 7.9.

Copyright © 2001 IEEE. All rights reserved.

Copyright The Institute of Electrical and Electronics Engineers, Inc.
Provided by IHS under license with IEEE
No reproduction or networking permitted without license from IHS
Not for Resale

UL 489-1991 further specifies that MCCBs are specifically intended to provide service entrance, feeder, and branch circuit protection in accordance with the NEC. Present Underwriters Laboratories (UL) requirements cover MCCBs rated through 600 V and 6000 A.

ANSI C37.16-2000 includes information on ratings, application, and operating conditions applicable to LVPCBs.

When specifying MCCBs or LVPCBs, the circuit breaker should be applied within its ratings for circuit protection.

The term *insulated-case circuit breaker* (ICCB) is commonly used to designate a circuit breaker with a supportive and enclosing housing of insulating material and with a stored energy mechanism. ICCBs are typically available in frame sizes of 800 A and above. They are generally listed under UL 489-1991.

The term *air circuit breaker* is often used in speaking of LVPCBs. Because the arc interruption takes place in air in both MCCBs and LVPCBs, this term really applies to both types.

The material in this chapter is limited to general purpose applications of circuit breakers that provide overcurrent protection on ac power systems through 600 V. Circuit breakers intended for special purpose applications, such as instantaneous trip only, are not covered. For circuit breaker ratings, requirements, and recommendations in mining applications, transit systems, or other special purpose applications, the standards in 7.9 or the manufacturers' literature should be consulted.

7.2 Ratings

The ratings that apply to circuit breakers and their assigned numerical values reflect the mechanical, electrical, and thermal capabilities of the circuit breakers and generally comply with industry standards published by the National Electrical Manufacturers Association (NEMA), Underwriters Laboratories (UL), or the American National Standards Institute (ANSI). A brief description of the basic ratings is given in 7.2.1 through 7.2.7.

7.2.1 voltage: Circuit breakers are designed and marked with the maximum voltage at which they can be applied. They can be used on any system where the voltage is lower than the breaker's voltage rating. Voltage ratings distinguish between delta-connected, three-phase, three-wire systems and wye-connected, three-phase, four-wire systems, which are more common. Refer to IEEE Std 141-1993 for system voltages and nomenclature. The NEC provides the following guideline in Article 240-85(e)(FPN):

> A circuit breaker with a straight voltage rating, e.g., 240 V or 480 V may be applied in a circuit in which the nominal voltage between any two conductors does not exceed the circuit breaker's voltage rating; except that a two-pole circuit breaker is not suitable for protecting a 3-phase corner-grounded delta circuit unless it is marked 1-phase/3-phase to indicate such suitability.

 Copyright © 2001 IEEE. All rights reserved.

Copyright The Institute of Electrical and Electronics Engineers, Inc.
Provided by IHS under license with IEEE
No reproduction or networking permitted without license from IHS Not for Resale

A circuit breaker with a slash rating, e.g., 120/240 V or 480Y/277 V, may only be applied in a circuit in which the nominal voltage to ground from any conductor does not exceed the lower of the two values of the circuit breaker's voltage rating and the nominal voltage between any two conductors does not exceed the higher value of the circuit breaker's voltage rating.

LVPCBs are all marked, rated, and tested only for the straight voltage system requirements as are all larger MCCBs. MCCBs rated 250 A or below are rated for either straight or slash voltage systems.

7.2.2 frequency: Circuit breakers are normally suitable for use in 50 Hz and 60 Hz electrical distribution systems. DC ratings are marked on the circuit breaker when they apply.

7.2.3 continuous-current: Standard MCCBs are calibrated to carry 100% of their current rating in open air at a given ambient temperature (usually 40 °C). In accordance with NEC Article 210-19, these breakers, as installed in individual enclosures or in other equipment, should not be continuously loaded over 80% of their current rating.

LVPCBs and certain ICCBs and MCCBs are specifically rated for 100% continuous duty. These circuit breakers can be continuously loaded to 100% of their current rating in a 40 °C ambient when installed in their proper enclosures.

7.2.4 poles: Circuit breakers are available in one-, two-, and three-pole versions. Outside North America, four-pole MCCBs are also available as IEC-rated units for systems in which the neutral is switched with the disconnect device. Switching neutral circuit breakers are available in the United States for classified applications such as in gasoline stations.

7.2.5 control voltage: The control voltage rating is the ac or dc voltage designated to be applied to control devices intended to open or close a circuit breaker. These devices can normally be supplied with a voltage rating needed to meet a particular control system.

7.2.6 interrupting: As defined in the NEC, interrupting rating is "The highest current at rated voltage that a device is intended to interrupt under standard test conditions." The interrupting rating (or short-circuit current rating, when referring to LVPCBs) is commonly expressed in root-mean-square (rms) symmetrical amperes. It may vary with the applied voltage and is established by testing per UL or ANSI standards.

Where the interrupting ratings of conventional MCCBs or LVPCBs are not sufficient for a particular system application, other options are available, such as current-limiting circuit breakers, integrally fused circuit breakers, and series-rated combinations. In series-rated combinations, the load-side circuit breaker is used in a system with a short-circuit availability above its nameplate interrupting rating while a supply-side circuit breaker or fuse rated at or above the available short-circuit current is present to protect the load-side circuit breaker. Certified series ratings are tested and marked on listed equipment in which they are used in accordance with the NEC.

Copyright © 2001 IEEE. All rights reserved.

Copyright The Institute of Electrical and Electronics Engineers, Inc.
Provided by IHS under license with IEEE
No reproduction or networking permitted without license from IHS
Not for Resale

7.2.7 short-time current: The short-time current rating, sometimes referred to as withstand rating, specifies the maximum capability of a circuit breaker to withstand the effects of short-circuit current flow for a stated period, typically 0.5 s or less, without opening. This capability provides time for load-side protective devices closer to the fault to operate and isolate the circuit.

The short-circuit current rating of an LVPCB without instantaneous trip characteristics is equal to the circuit breaker's short-time interrupting rating. Most MCCBs are not provided with a short-time current rating; however, some higher current rated MCCBs (presently 1200 A and above) are provided with a short-time current rating in addition to the short-circuit interrupting rating.

To achieve selective coordination, circuit breakers equipped only with long-time and short-time delay may be used on the supply side of the load protective device.

7.3 Current limitation

Current limitation using circuit breakers can be provided by two types of circuit breakers: current-limiting and integrally fused. Each type is discussed in 7.3.1 and 7.3.2, respectively.

7.3.1 Current-limiting circuit breakers

Current-limiting circuit breakers are special MCCBs that not only provide high interrupting capabilities, but also limit let-through current and energy to load-side devices. UL 489-1996 defines a current-limiting circuit breaker as "a circuit breaker that does not employ a fusible element and that when operating within its current-limiting range, limits the let-through I^2t to a value less than the I^2t of a half-cycle wave of the electrical prospective current."

I^2t, as used in the definition, is an expression related to the energy resulting from current flow. It is defined as $I^2t = \int i^2(t)dt$ over the period of consideration (i.e., usually from initiation of short circuit to clearing). Specific manufacturers' literature should be consulted for information on the current-limiting characteristics of their circuit breakers. Current-limiting circuit breakers provide the system designer with a means of reducing fault-current energy levels to load-side system components while still retaining the advantages of circuit breaker construction, such as common trip and reusability. These breakers can be reset and service restored in the same manner as conventional thermal-magnetic circuit breakers. Nothing needs to be replaced, even after clearing maximum rated fault currents. After interruption at high fault levels, it is required that the faulted equipment including the circuit breaker be checked and replaced if necessary before being put back into service. Figure 7-2 illustrates the current waveform resulting from current-limiting operation.

7.3.2 Integrally fused circuit breakers

Integrally fused circuit breakers provide high interrupting capability through the use of current-limiting fuses that are assembled into the housing of the circuit breaker. The fuses in these devices are designed to operate and require replacement only after a high-level fault.

Copyright © 2001 IEEE. All rights reserved.

--`,,`-`-`,,`,,`,`,,`---

Copyright The Institute of Electrical and Electronics Engineers, Inc.
Provided by IHS under license with IEEE
No reproduction or networking permitted without license from IHS Not for Resale

The circuit breaker mechanism is interlocked so that when any fuse opens, the circuit breaker automatically opens.

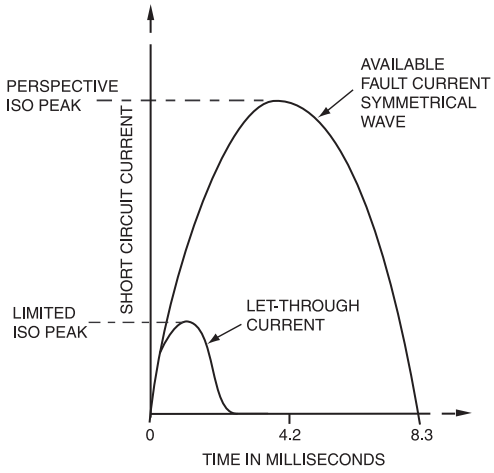

Figure 7-2—Current-limiting waveform (fault initiation at t = 0 and V maximum)

7.4 Typical ratings

Table 7-1 and Table 7-2 list typical ratings of MCCBs for commercial and industrial applications. Table 7-1 covers ratings of standard and high interrupting capacity units at several typical levels, while Table 7-2 covers current-limiting and fused breakers. Table 7-3 and Table 7-4 show standard ratings for LVPCBs with and without instantaneous overcurrent trip characteristics, respectively. Although the ratings in Table 7-3 and Table 7-4 are preferred ratings, most commercially available circuit breakers carry higher interrupting ratings. Also, 225 A and 600 A frame sizes are generally no longer manufactured. Table 7-5 covers integrally fused LVPCBs.

7.5 Trip unit

The trip unit continually senses current and initiates tripping according to its time-current trip curve to provide the automatic overcurrent protection function of the circuit breaker. Depending on the magnitude of the current, the trip unit initiates an inverse-time response or an instantaneous response. When tripping is initiated, a direct acting mechanism inside the circuit breaker opens the primary contacts and interrupts the current flow. The trip unit considered here is an integral part of the circuit breaker. It may be electromechanical [thermal-magnetic (see Figure 7-3 and Figure 7-4) or mechanical dashpot] or electronic (see Figure 7-5).

Copyright © 2001 IEEE. All rights reserved.

Copyright The Institute of Electrical and Electronics Engineers, Inc.
Provided by IHS under license with IEEE
No reproduction or networking permitted without license from IHS
Not for Resale

Table 7-1—Typical interrupting ratings of MCCBs for commercial and industrial applications[a]

Frame size (A)	Number of poles	Interrupting rating at ac voltage (kA, rms symmetrical)				
		120	240	277	480	600
100	1	10 65		14 65		
100, 150	2, 3 2, 3		18 65 100		14 25 65	14 18 25
225, 250	2, 3 2, 3		25 65 100		22 25 65	22 22 25
400, 600	2, 3 2, 3		42 65 100		30 65	22 25 35
800, 1000			42 65 200		30 50 100	22 25 65
1200			42 65 200		30 50 100	22 25 65
1600, 2000			65 125		50 100	42 65
3000, 4000			100 200		100 150	85 100

NOTE—Ratings in this table are typical. Variations among manufacturers or product changes may result in actual ratings that differ from the table. Specific manufacturers' literature should be consulted for guidance.

[a]Does not include MCCBs intended primarily for residential applications. Specific manufacturers should be consulted for rating information on those residential circuit breakers.

Trip units may be considered in five basic configurations:

— *Nonadjustable*. Nonadjustable trip units are most commonly available on smaller MCCBs. All characteristics are fixed.

— *Adjustable instantaneous*. Many thermal-magnetic MCCBs are fitted with an instantaneous (or magnetic trip) adjustment as shown in Figure 7-4. All other characteristics are fixed. The adjustment may be a single adjustment for all poles or an individual adjustment for each pole of the circuit breaker.

Copyright © 2001 IEEE. All rights reserved.

Copyright The Institute of Electrical and Electronics Engineers, Inc.
Provided by IHS under license with IEEE
No reproduction or networking permitted without license from IHS
Not for Resale

Table 7-2—Typical interrupting current ratings of current-limiting MCCBs and fused circuit breakers

Frame size (A)	Number of poles	Interrupting rating at ac voltage (kA, rms symmetrical)		
		240 V	480 V	600 V
		Current-limiting circuit breakers		
100–150	2, 3	200	200	100
225–250	2, 3	200	200	100
400–600	2, 3	200	200	100
		Fused circuit breakers[a]		
100–150	2, 3	200	200	200
400–600	2, 3	200	200	200
800–1000	2, 3	200	200	200
1600–2000	2, 3	200	200	200

NOTE—Ratings in this table are typical. Variations among manufacturers or product changes may result in actual ratings that differ from the table. Specific manufacturers' literature should be consulted for guidance.

[a]Includes circuit breakers with integral fuses within the enclosure or current-limiting fuses within an approved load-side add-on device.

— *Mechanical dashpot*. A mechanical dashpot trip unit is found on many older LVPCBs now in service. This trip unit is rare on newer ac products with the advent of electronic trips. It is found on larger dc-rated circuit breakers. It is not discussed in detail in this chapter.

— *Electronic*. Electronic trip units are found as standard on most LVPCBs and ICCBs and as an option on many MCCBs. They are equipped with adjustments for some or all of the characteristic adjustments listed in 7.5.1. Not all of the adjustments are used or required in all installations. In many cases the continuous-current rating is selected by installing or replacing a rating plug, which is a part identified with a specific current rating. An adjustment in addition to the rating plug may be made to achieve finer adjustment. Other adjustments are made using dials such as indicated in Figure 7-5 or simple programming steps. Additional functions, such as ground-fault protection, or combinations of functions that further influence circuit breaker time-current response are available from specific manufacturers. Ammeters and other visual displays are optionally available for monitoring the condition of the circuit and circuit breaker.

— *Communicating electronic*. In addition to the adjusting of the trip characteristic, some trip units provide communication with each other, with interfacing electronic systems and with the systems operators. Features may include selective interlocking for fast

Copyright © 2001 IEEE. All rights reserved.

Copyright The Institute of Electrical and Electronics Engineers, Inc.
Provided by IHS under license with IEEE
No reproduction or networking permitted without license from IHS
Not for Resale

Table 7-3—Preferred ratings for low-voltage ac power circuit breakers with instantaneous direct-acting phase trip elements[a]

System nominal voltage (V)	Rated maximum voltage (V)	Insulation (dielectric) withstand (V)	Three-phase short-circuit current rating (symmetrical A)[b]	Frame size (A)	Range of trip-device current ratings (A)[c]
600	635	2200	14 000	225	40–225
600	635	2200	22 000	600	40–600
600	635	2200	22 000	800	100–800
600	635	2200	42 000	1600	200–1600
600	635	2200	42 000	2000	200–2000
600	635	2200	65 000	3000	2000–3000
600	635	2200	65 000	3200	2000–3200
600	635	2200	85 000	4000	4000
480	508	2200	22 000	225	40–225
480	508	2200	30 000	600	100–600
480	508	2200	30 000	800	100–800
480	508	2200	50 000	1600	400–1600
480	508	2200	50 000	2000	400–2000
480	508	2200	65 000	3000	2000–3000
480	508	2200	65 000	3200	2000–3200
480	508	2200	85 000	4000	4000
240	254	2200	25 000	225	40–225
240	254	2200	42 000	600	150–600
240	254	2200	42 000	800	150–800
240	254	2200	65 000	1600	600–1600
240	254	2200	65 000	2000	600–2000
240	254	2200	85 000	3000	2000–3000
240	254	2200	85 000	3200	2000–3200
240	254	2200	130 000	4000	4000

[a]See IEEE Std C37.13-1990 and ANSI C37.16-2000.
[b]Ratings in this column are rms symmetrical values for single-phase (two-pole) circuit breakers and three-phase average rms symmetrical values of three-phase (three-pole) circuit breakers. When applied on systems where rated maximum voltage may appear across a single pole, the short-circuit current ratings are 87% of these values. See 5.6 in IEEE Std C37.13-1990.
[c]The continuous-current-carrying capability of some circuit-breaker-trip-device combinations may be higher than the trip-device current rating. See 10.1.3 in IEEE Std C37.13-1990.

but orderly shutdown, phase balance protection, power monitoring, waveshape monitoring, and remote monitoring and control. These features vary by product and manufacturer. Basic trip unit functions are the same as in the electronic trip unit.

Copyright © 2001 IEEE. All rights reserved.

--`,,`-`-`,,`,,`,`,,`---

Copyright The Institute of Electrical and Electronics Engineers, Inc.
Provided by IHS under license with IEEE
No reproduction or networking permitted without license from IHS
Not for Resale

Table 7-4—Preferred ratings for low-voltage ac power circuit breakers without instantaneous direct-acting phase trip elements (short-time delay element or remote relay)[a]

System nominal voltage (V)	Rated maximum voltage (V)	Insulation (dielectric) withstand (V)	Three-phase short-circuit current rating (symmetrical A)[b,c]	Frame size (A)	Range of trip-device current ratings (A)[d]		
					Setting of short-time-delay trip element		
					Minimum time band	Intermediate time band	Maximum time band
600	635	2200	14 000	225	100–225	125–225	150–225
600	635	2200	22 000	600	175–600	200–600	250–600
600	635	2200	22 000	800	175–800	200–800	250–800
600	635	2200	42 000	1600	350–1600	400–1600	500–1600
600	635	2200	42 000	2000	350–2000	400–2000	500–2000
600	635	2200	65 000	3000	2000–3000	2000–3000	2000–3000
600	635	2200	65 000	3200	2000–3200	2000–3200	2000–3200
600	635	2200	85 000	4000	4000	4000	4000
480	508	2200	22 000	225	100–225	125–225	150–225
480	508	2200	30 000	600	175–600	200–600	250–600
480	508	2200	30 000	800	175–800	200–800	250–800
480	508	2200	50 000	1600	350–1600	400–1600	500–1600
480	508	2200	50 000	2000	350–2000	400–2000	500–2000
480	508	2200	65 000	3000	2000–3000	2000–3000	2000–3000
480	508	2200	65 000	3200	2000–3200	2000–3200	2000–3200
480	508	2200	85 000	4000	4000	4000	4000
240	254	2200	25 000	225	100–225	125–225	150–225
240	254	2200	42 000	600	175–600	200–600	250–600
240	254	2200	42 000	800	175–800	200–800	250–800
240	254	2200	65 000	1600	350–1600	400–1600	500–1600
240	254	2200	65 000	2000	350–2000	400–2000	500–2000
240	254	2200	85 000	3000	2000–3000	2000–3000	2000–3000
240	254	2200	85 000	3200	2000–3200	2000–3200	2000–3200
240	254	2200	130 000	4000	4000	4000	4000

[a]See IEEE Std C37.13-1990 and ANSI C37.16-2000.

[b]Short-circuit ratings for breakers without direct-acting trip devices, opened by a remote relay, are the same as ratings listed in this column.

[c]Ratings in this column are rms symmetrical values for single-phase (two-pole) circuit breakers and three-phase average rms symmetrical values of three-phase (three-pole) circuit breakers. When applied on systems where rated maximum voltage may appear across a single pole, the short-circuit current ratings are 87% of these values. See 5.6 in IEEE Std C37.13-1990.

[d]The continuous-current-carrying capability of some circuit-breaker-trip-device combinations may be higher than the trip-device current rating. See 10.1.3 in IEEE Std C37.13-1990.

Copyright © 2001 IEEE. All rights reserved.

Copyright The Institute of Electrical and Electronics Engineers, Inc.
Provided by IHS under license with IEEE
No reproduction or networking permitted without license from IHS
Not for Resale

Table 7-5—Preferred ratings for integrally fused low-voltage ac power circuit breakers with instantaneous direct-acting phase trip elements[a]

Circuit breaker frame size (A)[b]	Rated maximum voltage (V)[c]	Insulation (dielectric) withstand (V)	Three-phase short-circuit current rating (A, sym)[d]	Range of continuous-current rating (A)	
				Range of trip-device current ratings (A)[e]	Maximum fuse rating[f]
600	600	2200	200 000	125–600	[g]
800	600	2200	200 000	125–800	[g]
1600	600	2200	200 000	200–1600	[g]

[a]See IEEE Std C37.13-1990 and ANSI C37.16-2000.
[b]Two circuit-breaker fram ratings are used for integrally fused circuit breakers. The continuous-current rating of the integrally fused circuit breaker is determined by the rating of either the direct-acting trip device or the current-limiting fuse applied to a particular circuit-breaker frame rating, whichever is smaller.
[c]Listed values are limited by the standard voltage rating of the fuse.
[d]Ratings in this column are rms symmetrical values for single-phase (two-pole) circuit breakers and three-phase average rms symmetrical values of three-phase (three-pole) circuit breakers. When applied on systems where rated maximum voltage may appear across a single pole, the short-circuit current ratings are 87% of these values. See 5.6 in IEEE Std C37.13-1990.
[e]The continuous-current-carrying capability of some circuit-breaker-trip-device combinations may be higher than the trip-device current rating. See 10.1.3 in IEEE Std C37.13-1990. Lower rated trip-device current ratings may be used when the fuse size is small or the available current is low, or both. The manufacturer should be consulted.
[f]Fuse current ratings may be 300 A, 400 A, 600 A, 800 A, 1000 A, 1200 A, 1600 A, 2000 A, 2500 A, and 3000 A. Fuses are current-limiting.
[g]Values have not yet been determined; the manufacturer should be consulted.

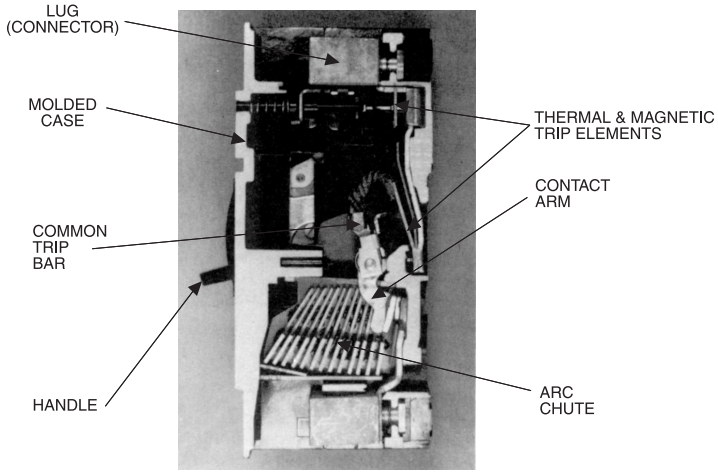

Figure 7-3—Thermal-magnetic trip MCCB

Copyright © 2001 IEEE. All rights reserved.

Copyright The Institute of Electrical and Electronics Engineers, Inc.
Provided by IHS under license with IEEE
No reproduction or networking permitted without license from IHS
Not for Resale

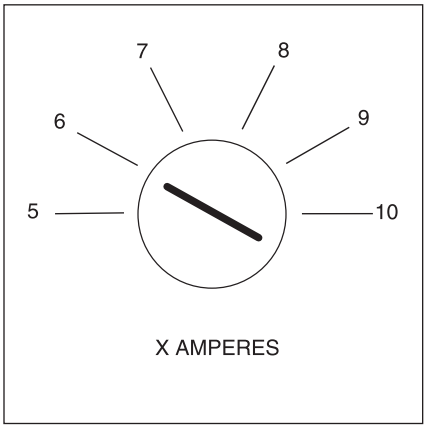

Figure 7-4—Instantaneous (magnetic) current adjustment provided on thermal-magnetic circuit breakers

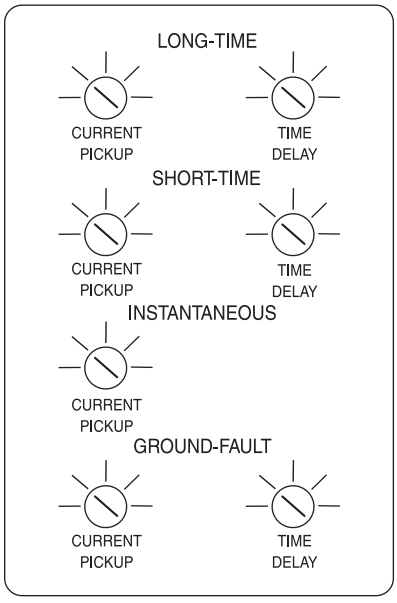

Figure 7-5—Electronic trip unit with long-time, short-time, instantaneous, and ground-fault adjustments

Zone selective interlocking (ZSI) is defined as a function provided for rapid clearing while retaining coordination. The function is a communication interconnection between the electronic trip units of two or more circuit breakers connected in series on multiple levels. By means of intercommunication between the short-time delay and/or ground-fault elements, the

Copyright © 2001 IEEE. All rights reserved.

Copyright The Institute of Electrical and Electronics Engineers, Inc.
Provided by IHS under license with IEEE
No reproduction or networking permitted without license from IHS
Not for Resale

breaker nearest the fault trips with minimum time delay while signaling the supply-side circuit breakers to delay for a predetermined period. Synonyms are zone interlocking and selective interlocking.

Contrasted with traditional systems in which short-time delay is set for selective coordination and should time out before tripping occurs, the selectively interlocked system substantially reduces the potentially damaging energy delivered to a fault because delay in tripping is not introduced beyond any setting present on the circuit breaker closest to the fault.

When harmonics or other nonlinear conditions are potentially present, the sensing systems in the various trip unit types react in different ways. Bimetals and similar thermal elements in thermal magnetic trip units react directly to I^2R heating and provide true rms current sensing. Some electronic trip units provide high accuracy in sensing true rms current by combining high frequency current sampling with internal software that calculates rms values. Such devices may be preferred where overload protection is a concern. Analog and peak-sensing digital electronic trip units may not provide an accurate rms measurement where a high power content of harmonics or other disturbances are present, but may be quite suitable when high fault protection is of concern. Manufacturers' specifications may help in identifying the capability of a particular trip unit. Trip units that are less accurate in rms sensing are likely to trip at lower-than-expected 60 Hz fundamental current values due to nonsinusoidal conditions.

7.5.1 Time-current characteristic (TCC) curves

The TCC curve depicts the time required for a circuit breaker to open automatically versus the current through it. The curve is principally a function of the type of trip unit and its settings. The inverse-time characteristic is intended to protect conductors. The inverse-time characteristic derives its name from the inverse proportionality of time to operate versus magnitude of current flowing through the circuit breaker. In other words, opening is faster when the overcurrent condition is higher.

The curve (see Figure 7-6, Figure 7-7a, and Figure 7-7b) may conveniently be separated into three regions:

— *Long-time*, in which opening is timed in minutes up to a maximum of 1 hour or 2 hour—depending on the circuit breaker size and the degree of overcurrent—to provide an inverse-time characteristic. The provided time delay allows intermittent or cyclical loads above the pickup current to be carried without causing an interruption. It trips on sustained overcurrent to protect conductors and other equipment.
— *Short-time*, in which opening is timed in seconds or tenths of seconds. Overcurrents might be in the range expected in the case of a motor locked rotor or an arcing ground fault. Time delay in this region allows for starting and inrush transient currents or for selective coordination with supply-side or load-side devices.
— *Instantaneous*, in which opening is not intentionally delayed and is timed in milliseconds. Typical operation is a result of short circuit from a bolted fault.

 Copyright © 2001 IEEE. All rights reserved.

Copyright The Institute of Electrical and Electronics Engineers, Inc.
Provided by IHS under license with IEEE
No reproduction or networking permitted without license from IHS Not for Resale

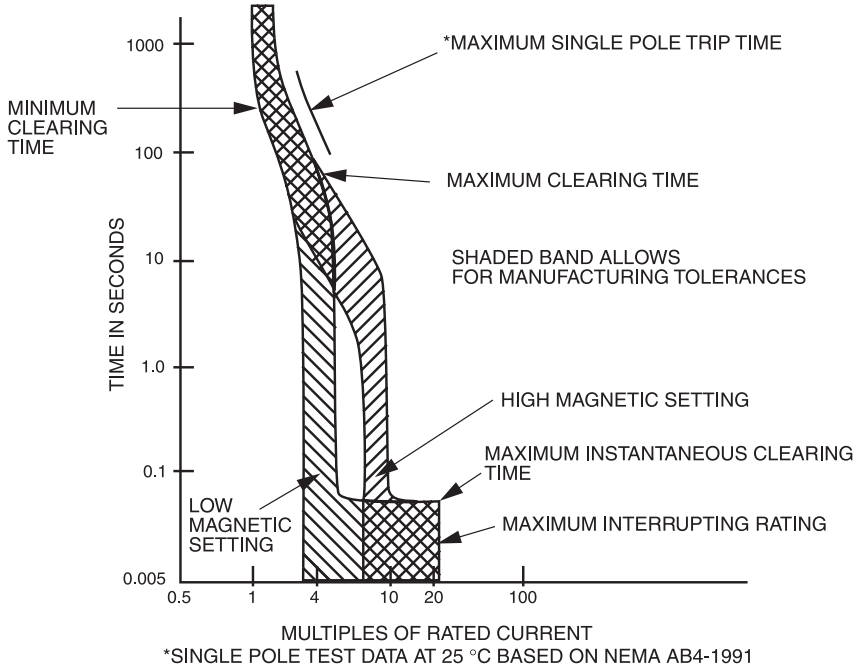

Figure 7-6—Typical TCC curve for a three-pole 600 A frame size MCCB in open air at rated temperature, usually 40 °C

Time current curves are excellent engineering tools when time and current are the primary factors. In the short-circuit region, other factors (e.g., power factor, instant of fault initiation, number of poles or phases in the fault, behavior of other equipment in the circuit) can also affect reaction and clearing time. Commonly available curves drawn in accordance with NEMA AB 1-1986 show a wide band of clearing time for multiple pole interruption that includes the effect of these factors.

The continuous-current rating may be fixed or adjustable. Some designs may require replacing all or part of the trip unit to change the continuous rating. Overcurrent trip characteristics are a function, multiple, or percentage of the continuous-current rating.

7.5.1.1 Thermal-magnetic trip unit characteristic

A typical TCC curve for a thermal-magnetic MCCB is depicted in Figure 7-6. This particular curve is for a 600 A frame in ratings of 125 A to 600 A at the typical rated operating temperature of 40 °C. It indicates the operating time from a cold (40 °C) start at initiation of an overcurrent to clearing. The operating time varies inversely with current level. The shaded band covers manufacturing tolerances and other variables of a typical installation.

Regarding operating temperature, NEMA AB 3-1991 states “Molded-case circuit breakers are calibrated at 100 percent of rated current in open air for a given ambient temperature usually 25 °C or 40 °C. Where the ambient temperature is known to differ significantly from the

Copyright © 2001 IEEE. All rights reserved.

Copyright The Institute of Electrical and Electronics Engineers, Inc.
Provided by IHS under license with IEEE
No reproduction or networking permitted without license from IHS
Not for Resale

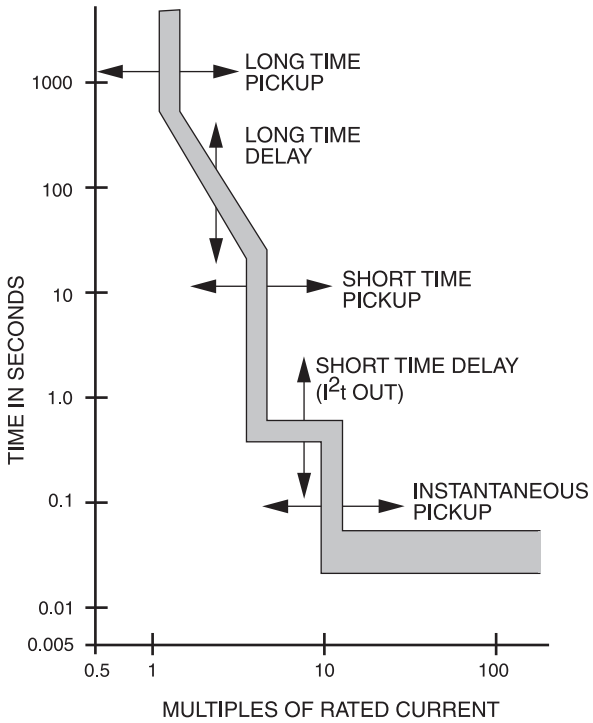

Figure 7-7a—Typical TCC curve for electronic trip circuit breaker (I^2t OUT); adjustable functions identified

calibration temperature, the breaker used should be specifically calibrated for that ambient or be re-rated accordingly. When the expected range of ambient air temperature around the circuit breaker is lower than –5 °C or higher than 40 °C, breaker operation may be affected."

The long-time region at the upper end of the curve is determined by deflection of a bimetal or similar thermal element reacting to I^2R heating caused by the overcurrent condition. The long-time band is fixed, and adjustments are not provided for thermal-magnetic circuit breakers.

In the instantaneous region at the bottom of the curve, operation is with no intentional delay. Tripping action of the mechanism is typically caused by an electromagnet in the trip unit energized by the fault current. The operating time includes mechanical reaction and arc clearing time and is a maximum at the line so labeled on the curve. Contacts of current-limiting circuit breakers open directly due to forces caused by fault current and are independent of the multipole operating mechanism. The operating mechanism responds several milliseconds after the contacts of poles carrying fault current are forced open so that the mechanism opens all poles of the circuit breaker and holds contacts open after clearing the fault. The mechanism operating time is not a factor in clearing time for these rapidly operating circuit breakers.

Copyright © 2001 IEEE. All rights reserved.

--`,,`-`-`,,`,,`,`,,`---

Copyright The Institute of Electrical and Electronics Engineers, Inc.
Provided by IHS under license with IEEE
No reproduction or networking permitted without license from IHS
Not for Resale

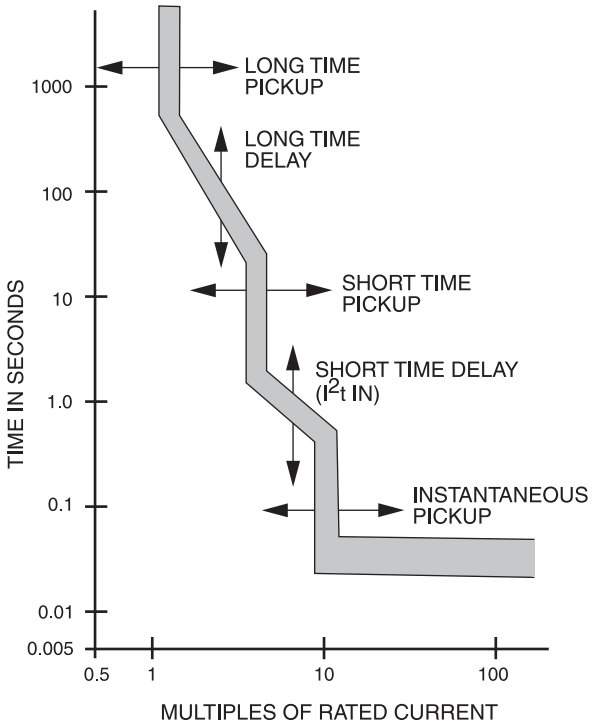

Figure 7-7b—Typical TCC curve for electronic trip circuit breaker (I^2t IN); adjustable functions identified

For the thermal-magnetic circuit breaker, no true short-time region exists as does for circuit breakers with electronic trip units. For many thermal-magnetic circuit breakers such as the one in Figure 7-6, the instantaneous tripping current level (or magnetic tripping level) can be adjusted higher or lower. A typical adjustment is pictured in Figure 7-4. In Figure 7-6, two curves are shown, one with adjustment at low (minimum) setting and the second with the adjustment at high (maximum) setting. This adjustment helps to set instantaneous tripping above starting or inrush transients.

Some magnetic instantaneous elements are peak sensitive even though rms calibrated. Where harmonics are present, care should be used.

7.5.1.2 Electronic trip unit characteristic

Figure 7-7a and Figure 7-7b depict typical TCC curves for electronic trip units with the five most common adjustments: long-time current pickup, long-time delay, short-time pickup, short-time delay, and instantaneous pickup.

— For a given frame rating, the long-time current pickup (sometimes called current setting), in addition to the rating plug selected, determines the current rating of the circuit breaker. This function determines the current at which the tripping function

Copyright © 2001 IEEE. All rights reserved.

Copyright The Institute of Electrical and Electronics Engineers, Inc.
Provided by IHS under license with IEEE
No reproduction or networking permitted without license from IHS
Not for Resale

picks up and begins timing. The means of pickup setting adjustment should be located behind a sealable cover or otherwise restricted to qualified personnel in order to be considered the rating under NEC Article 240-6.

— The long-time delay can be adjusted to enable the system to withstand temporary overloads before tripping. This setting varies the time that the circuit breaker carries a given overload.

— The short-time pickup determines the current level at which the short-time tripping function begins timing.

— The short-time delay setting determines the time delay for any current level above the pickup before tripping. The short-time characteristic is provided primarily for selective coordination with load-side circuit breakers or fuses. The short-time (or withstand) rating establishes the capability of the circuit breaker to withstand forces and heat associated with the time delay with currents above the short-time pickup current level.

— The instantaneous pickup sets the current level at which the trip unit initiates instantaneous tripping. The instantaneous feature may not be provided or may be switched off on some circuit breakers to make full use of the short-time feature for selective coordination. Although instantaneous tripping has no intentional delay, time to pickup is typically .033 s within the instantaneous trip band and .011 s for higher short-circuit currents. Clearing time is in addition to the pickup time.

Further refinement of the electronic trip unit's short-time delay characteristic for overcurrent protection or the ground-fault time-delay characteristic may be obtained by shaping part of the response curve as an inverse function of the I^2t, illustrated by the sloping portion of Figure 7-7a and Figure 7-7b. This response curve provides greater selectivity with load-side thermal-magnetic circuit breakers or fuses that have a similarly sloping response curve.

The most full-featured trip units may include the five most common adjustments plus ground-fault pickup and delay adjustments plus communication features described for the communicating electronic trip unit (see 7.5). Specifications should call out the functions that are necessary on a particular installation. Specific manufacturers' literature should be consulted for guidance on individual units.

7.5.1.3 Ground-fault TCC

Electronic trip units in low-voltage circuit breakers may also provide TCCs illustrated by Figure 7-8a and Figure 7-8b for equipment ground-fault protection to meet the requirements of NEC Article 215-10 and Artcile 230-95. NEC requirements establish the maximum current setting of the ground-fault device at 1200 A and, in addition, limit the maximum time delay to 1 s for fault currents equal to or greater than 3000 A. Selectivity is enhanced by the presence of an optional trip unit adjustment that provides inverse ground-fault TCCs illustrated by the sloping portion of the curve in Figure 7-8b. While this chapter refers to ground-fault protection with regard to circuit breaker application, Chapter 8 gives a more complete treatment of the subject.

Copyright © 2001 IEEE. All rights reserved.

--`,,`,,`-`-`,,`,,`,`,,`---

Copyright The Institute of Electrical and Electronics Engineers, Inc.
Provided by IHS under license with IEEE
No reproduction or networking permitted without license from IHS Not for Resale

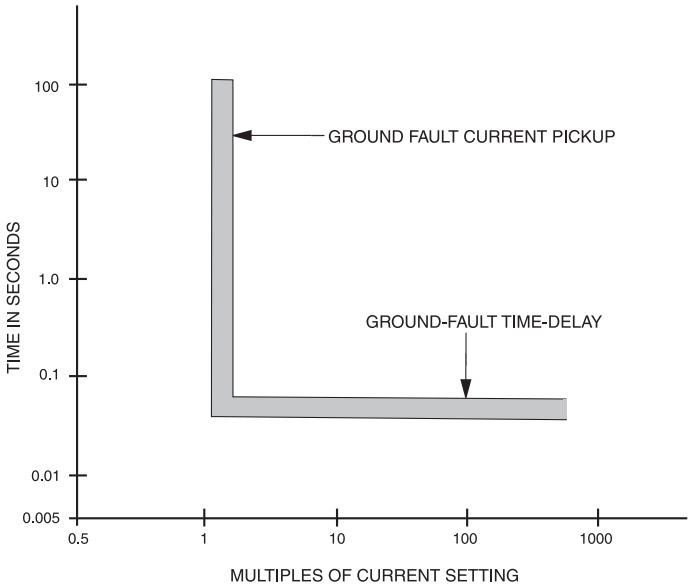

Figure 7-8a—Ground-fault TCC curve (I^2t OUT) for electronic trip circuit breaker

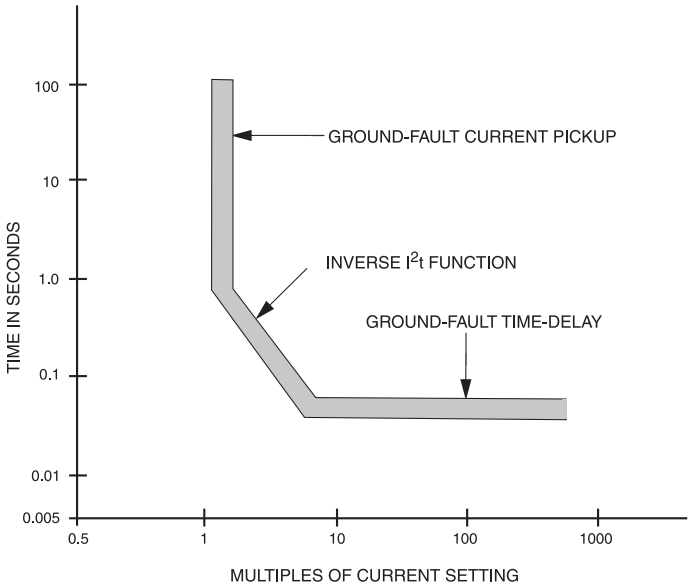

Figure 7-8b—Ground-fault TCC curve (I^2t IN) for electronic trip circuit breaker

Typical adjustments are ground-fault current pickup and time delay. Neutral current sensors are available as an external accessory for most circuit breakers with ground-fault protection so that neutral current can be summed vectorially with phase current.

Copyright © 2001 IEEE. All rights reserved.

Copyright The Institute of Electrical and Electronics Engineers, Inc.
Provided by IHS under license with IEEE
No reproduction or networking permitted without license from IHS
Not for Resale

7.5.1.4 Separate protective relays

LVPCBs are also applied with shunt trip devices and separate protective relays, both for overcurrent and ground-fault protection. These applications are identical to the applications covered in Chapter 4 and Chapter 8 and are not discussed further in this chapter.

7.6 Application

Consideration of all the factors related to proper application of a low-voltage circuit breaker goes beyond voltage, current, and interrupting rating. The performance of a specific type of circuit breaker may be influenced by nonelectrical factors related to the installation environment, such as ambient temperature, humidity, elevation, or presence of contaminants. Enclosure type and size, service conditions, loads and their characteristics, outgoing conductors, characteristics of the electrical distribution system, other protective devices on the line side and load side of the circuit breaker under consideration, and even frequency of operation and maintenance should all be taken into account. For this chapter, application considerations are limited to conditions involving abnormal current and to providing protection and selective coordination under these conditions.

7.6.1 Protection

The function of system protection may be defined as the detection and prompt isolation of the affected portion of the system when a short circuit or other abnormality occurs that might cause damage to, or adversely affect, the operation of any portion of the system or the load that it supplies.

Treatment of the overall problem of system protection and coordination of electrical power systems is restricted to the selection, application, and coordination of devices and equipment whose primary function is the isolation and removal of short circuits from the system. Short circuits may be phase-to-ground, phase-to-phase, phase-to-phase-to-ground, three-phase, or three-phase-to-ground. Short circuits may range in magnitude from extremely low-current faults having high-impedance paths to extremely high-current faults having very low-impedance paths. However, all short circuits produce abnormal current flow in one or more phase conductors or in the ground path. Such disturbances should be detected and safely isolated .

Two types of overcurrent protection are emphasized: phase-overcurrent and ground-fault. At the present state of the art, phase-overcurrent conditions are detected on the basis of their magnitudes. Response time is dependent upon the particular overcurrent TCC curve. Ground-fault currents of a sufficient magnitude may be detected by phase-overcurrent devices. Currents below the minimum current sensitivity of phase-overcurrent devices, such as arcing ground faults, are not cleared. A separate means (either internal to the circuit breaker or externally mounted) should be provided to detect these low-level arcing ground faults. This means of detection commonly consists of current sensors that monitor each phase and the grounding conductor separately or one current sensor that monitors all phase conductors. A single current sensor that monitors the ground-fault current in a transformer or generator

 Copyright © 2001 IEEE. All rights reserved.

Copyright The Institute of Electrical and Electronics Engineers, Inc.
Provided by IHS under license with IEEE
No reproduction or networking permitted without license from IHS Not for Resale

neutral grounding conductor may be used. Refer to NEMA PB 2.2-1988 for the application of ground-fault protective devices for equipment. Circuit breakers have the advantage of providing a convenient means for opening all phase conductors in response to a signal from either the phase-overcurrent or ground-fault detection device. They have the additional advantage of having the current sensors and logic circuitry located internally within the breaker. This location minimizes the need to make external connections to control components.

A fundamental rule necessary for system protection is to apply circuit breakers within their interrupting or short-circuit current ratings. The determination of available short-circuit current at the various levels throughout the electrical distribution system is a necessary step to be completed prior to selecting circuit breakers for system protection. (Chapter 2 discusses methods of calculating available short-circuit current.) MCCBs are available with various interrupting ratings in the same physical frame size. Selection by frame size or continuous-current rating alone is not sufficient; the interrupting rating should also be considered.

Current-limiting fuses, integrally fused circuit breakers, or current-limiting circuit breakers may be provided to lower the let-through short-circuit current. Curves depicting let-through current and I^2t are available from manufacturers to assist in the application of these circuit breakers as shown in Figure 7-9a and Figure 7-9b.

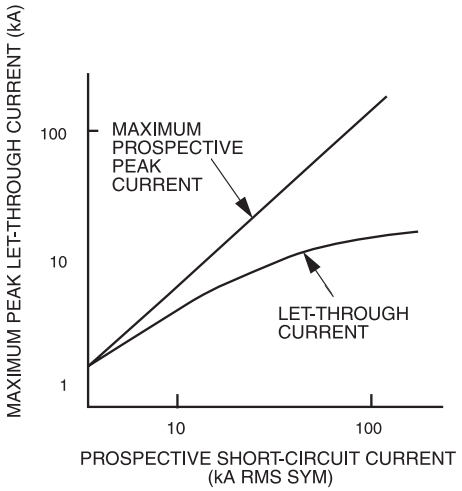

Figure 7-9a—Limited peak let-through current characteristics

An alternate method is the series connection of MCCBs, that is, two MCCBs electrically in series sharing fault interruption duties. This protection scheme is viable, provided performance is verified by testing. UL presently recognizes series-connected short-circuit ratings and prescribes test procedures to verify performance. Series ratings are a consequence of certain tests that are defined by UL standards, and only combinations of devices that have been appropriately tested should be used in series applications. See Figure 7-10 for an example of a test setup. Selectivity is not provided at any current level where the breaker trip characteristic curves overlap, that is, both circuit breakers trip. Series-connected ratings should be based

Copyright © 2001 IEEE. All rights reserved.

Copyright The Institute of Electrical and Electronics Engineers, Inc.
Provided by IHS under license with IEEE
No reproduction or networking permitted without license from IHS
Not for Resale

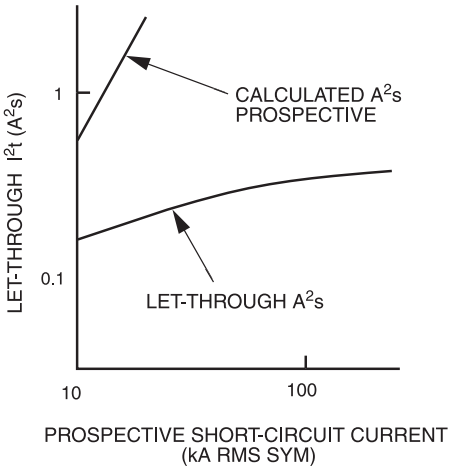

Figure 7-9b—Limited let-through *I* ^{2}*t* characteristics

on tests and are only valid for the specific circuit breaker types listed in the test reports. Individual manufacturer's series-connected ratings may be found in the *UL Recognized Component Directory.* Fuse and breaker coordinated combinations are also tested by UL and are applicable within their established ratings.

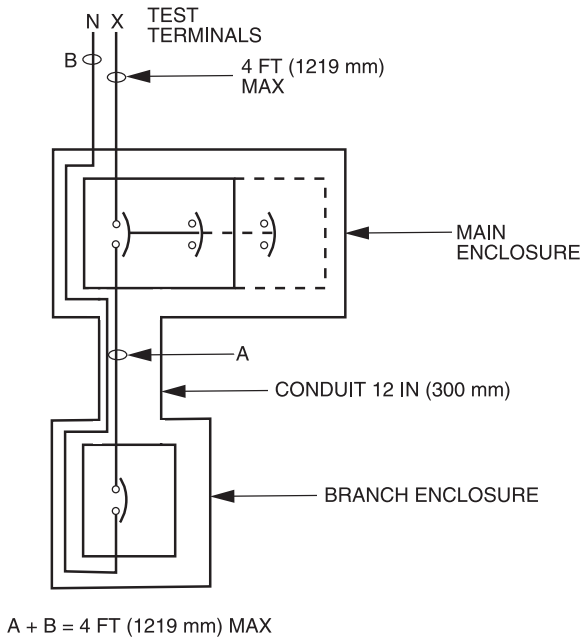

Figure 7-10—Series connection test circuit from UL 489-1996

Copyright © 2001 IEEE. All rights reserved.

--`,,`-`-`,,`,,`,`,,`---
Copyright The Institute of Electrical and Electronics Engineers, Inc.
Provided by IHS under license with IEEE
No reproduction or networking permitted without license from IHS
Not for Resale

Determination of available fault-current levels, specification of circuit breakers and associated equipment rated for those levels, and inspection to verify that properly rated equipment has been installed satisfy the basic requirement of providing adequately rated equipment for system protection.

Selection of appropriate trip unit functions and their settings to provide protection and coordination is the next consideration. Basic rules applicable to phase overcurrent protection are as follows:

a) Select continuous-current ratings and pickup settings of long-time delay characteristics, where adjustable, that are no higher than necessary without causing nuisance tripping and that meet applicable code requirements. The amount of time delay provided by the long-time delay characteristics should be selected to be no higher than necessary to override transient overcurrents associated with the energizing of load equipment and to coordinate with downstream protection devices.
b) Take advantage of the adjustable instantaneous trip characteristic on MCCBs and LVPCBs. Set the instantaneous trip no higher than necessary to avoid nuisance tripping. Be sure that instantaneous trip settings do not exceed the maximum available short-circuit current at the location of the circuit breaker in the system. This point is frequently overlooked, particularly in service entrance applications.
c) Provide ground-fault protection in accordance with the NEC, where required. Ground-fault current settings should be set to minimize hazard to personnel and damage to equipment. Time-delay adjustments of ground-fault protective devices should be set so that ground faults are cleared by the nearest device on the supply side of the ground fault.

7.6.2 Selective coordination

When protection is being considered, the performance of a circuit breaker with respect to the connected conductors and load is a primary concern. To achieve coordination, consideration is also given to the performance of a circuit breaker with respect to other protective devices on the supply side or load side of it. The objective in coordinating protective devices is to make them selective in their operation with respect to each other. In so doing, the effects of short circuits on a system are reduced to a minimum by disconnecting only the affected part of the system. Stated another way, only the circuit breaker nearest the short circuit should open, leaving the rest of the system intact and able to supply power to the unaffected parts. Chapter 15 covers the general subject of coordination in detail.

Generally, coordination is demonstrated by plotting the TCC curves of the circuit breakers involved and by making sure that the curves of adjacent circuit breakers do not overlap, as illustrated in Figure 7-11. Often selective coordination is possible only when circuit breakers with short-time delay characteristics are used in all circuit positions except the one closest to the load. This setting arrangement is particularly true when little or no circuit impedance exists between successive circuit breakers. This condition often exists in a main switchboard or load center unit substation between the main and feeder circuit breakers. In these cases, for all levels of possible short-circuit current beyond the load terminals of the feeder circuit breakers selectivity requires that the main circuit breaker be equipped with a combination of

Copyright © 2001 IEEE. All rights reserved.

Copyright The Institute of Electrical and Electronics Engineers, Inc.
Provided by IHS under license with IEEE
No reproduction or networking permitted without license from IHS
Not for Resale

long-time delay and short-time delay trip characteristics. The withstand rating of associated circuit components and assemblies should not be exceeded. Moving toward the load, on many feeder circuits sufficient impedance exists in the distribution system to appreciably lower the available short-circuit current at the next load-side level circuit breaker. If the available short-circuit current at this circuit breaker is less than the instantaneous trip setting of the feeder circuit breaker, then selectivity is achieved (see Figure 7-12).

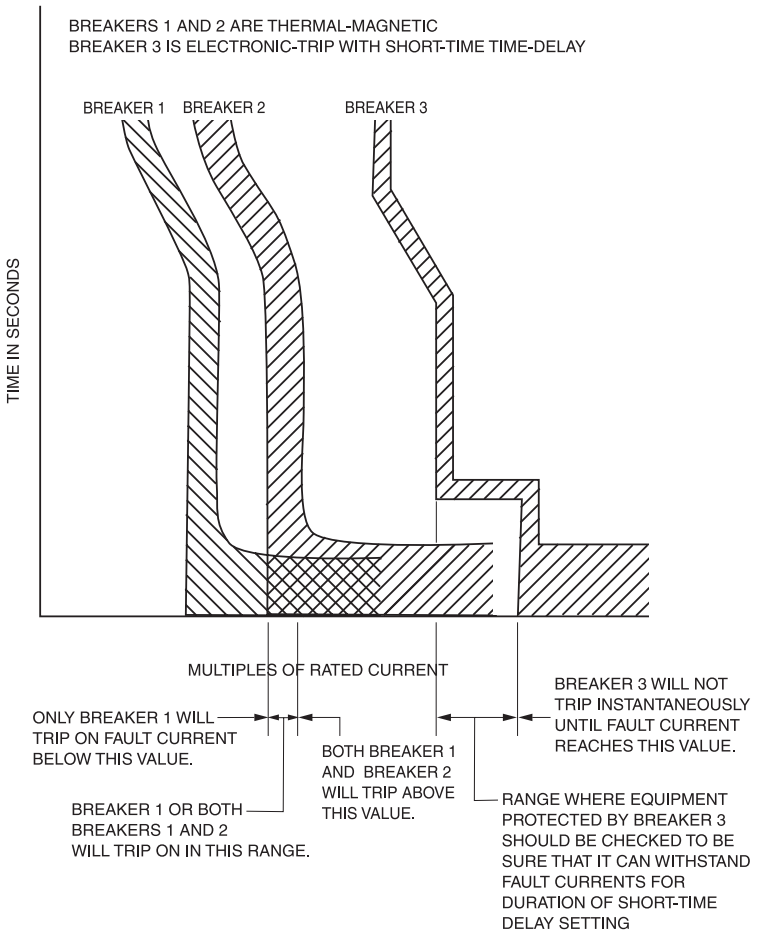

Figure 7-11—Coordinated tripping by overlapping TCC curves

The preceding discussion forms the basis for judging selective coordination between two circuit breakers in series. If the fault current being interrupted by a circuit breaker flows through the line-side circuit breaker for a period equal to or greater than its tripping time, the line-side circuit breaker trips. Under these conditions, the circuit breakers are not selective. However, if because of impedance between the circuit breakers, the maximum current that can flow during short-circuit conditions is insufficient to initiate tripping of the line-side circuit breaker, selectivity exists. An alternate method of achieving selective coordination is

Copyright © 2001 IEEE. All rights reserved.

Copyright The Institute of Electrical and Electronics Engineers, Inc.
Provided by IHS under license with IEEE
No reproduction or networking permitted without license from IHS
Not for Resale

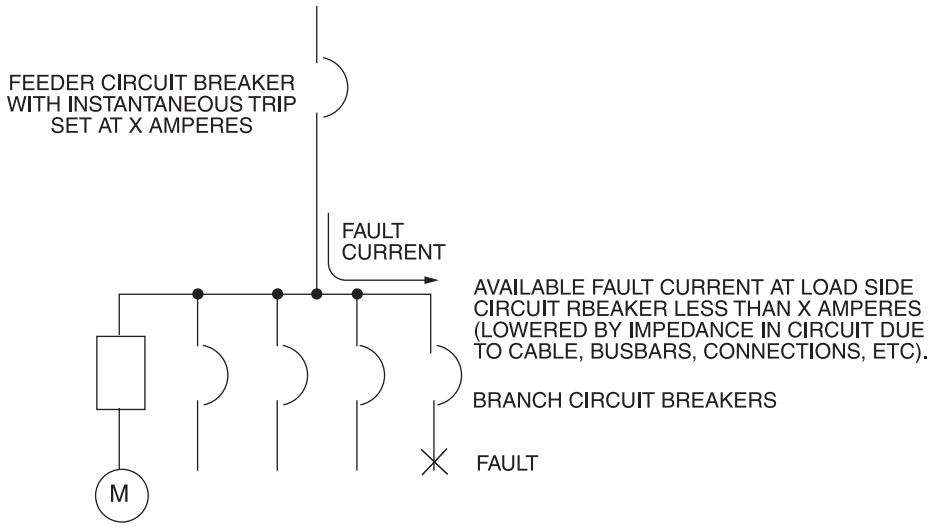

Figure 7-12—Coordinated tripping due to impedance in circuit

by selective interlocking of two or more levels of electronic trip units in a system. In a selectively interlocked system, the circuit breaker nearest to and toward the supply side of the fault senses the fault and signals other line-side circuit breakers that it is tripping. That signal restrains circuit breakers farther to the line-side from reacting until they time out according to their settings. Because it does not receive such a restraining signal from a load-side circuit breaker, the circuit breaker nearest the fault continues to trip with minimum delay. This method significantly limits the damaging energy delivered to a fault by permitting the circuit breaker nearest the fault to react without the short-time delay that is necessary to provide coordination by the time and pickup level method. The limitation of fault energy is even greater when the circuit breakers involved are current-limiting. Some circuit breakers with electronic trip units incorporate an instantaneous override set above their tripping characteristic for self protection. If fault current through the circuit breaker reaches this level, the circuit breaker trips with no intentional delay even in selectively interlocked systems. This feature should be considered in selectivity studies.

7.6.3 Power factor considerations

Normally the short-circuit power factor of a system need not be considered when applying either LVPCBs or MCCBs. This practice is based on the fact that the test circuit power factors on which ratings have been established are considered low enough to cover most applications. Test circuits with lagging power factors no greater than in Table 7-6 are used to establish interrupting ratings.

Where the power factor or *X*/*R* ratio for a specific system has been determined and is more inductive than the power factor used to establish the interrupting rating, the multiplying factor tabulated in Table 7-7 may be applied to the calculated, available short-circuit current. These

Copyright © 2001 IEEE. All rights reserved.

Copyright The Institute of Electrical and Electronics Engineers, Inc.
Provided by IHS under license with IEEE
No reproduction or networking permitted without license from IHS
Not for Resale

Table 7-6—Test circuit power factors

Available short-circuit current (A, rms symmetrical)	Lagging power factor (%)		
	MCCB[a]	LVPCB	
		Unfused[b]	Fused[b]
10 000 or less	50	15	20
10 001–20 000	30	15	20
over 20 000	20	15	20

[a]UL 489-1991.
[b]ANSI C37.50-1989.

multiplying factors adjust the short-circuit current to a value equal to the maximum transient offset in the initial half-cycle of short-circuit current flow using the relation in *Elements of Power System Analysis* (see Stevenson[B7]), as follows:

$$i(t) = \frac{V_{max}}{Z}\left[\sin(\omega t + \alpha - \theta) - \varepsilon^{\frac{-Rt}{L}}\sin(\alpha - \theta)\right]$$

where

t is time and is 0 when voltage is applied,
α is the electrical angle after $t = 0$ at which point the circuit is closed,
θ is the power angle and equals $\tan^{-1}(\omega L / R)$,
Z is $\sqrt{(R^2 + (\omega L)^2)}$.

By making the simplifying assumption that the circuit is closed at a time $t = 0$ when the instantaneous voltage is zero, the following multiplier is derived:

$$MULT = \frac{\left(1 + \varepsilon^{\frac{-\pi R}{X}}\right)CIRC}{\left(1 + \varepsilon^{\frac{-\pi R}{X}}\right)TEST}$$

where

CIRC is the circuit under consideration,
TEST is the circuit used to test the circuit breaker.

Copyright © 2001 IEEE. All rights reserved.

Copyright The Institute of Electrical and Electronics Engineers, Inc.
Provided by IHS under license with IEEE
No reproduction or networking permitted without license from IHS
Not for Resale

Table 7-7—Short-circuit current multiplying factor for circuit breakers

Power factor (%)	*X*/*R* ratio	MCCB interrupting rating (rms symmetrical A)			LVPCB	
		10 000 or less	10 001 to 20 000	over 20 000	Unfused	Fused
		Short circuit current multiplying factor				
4	24.98	1.62	1.37	1.23	1.16	1.23
5	19.97	1.59	1.35	1.22	1.14	1.22
6	16.64	1.57	1.33	1.20	1.12	1.20
7	14.25	1.55	1.31	1.18	1.11	1.19
8	12.46	1.53	1.29	1.16	1.10	1.18
9	11.07	1.51	1.28	1.15	1.09	1.15
10	9.95	1.49	1.26	1.13	1.07	1.14
11	9.04	1.47	1.24	1.12	1.05	1.12
12	8.27	1.45	1.23	1.10	1.04	1.11
13	7.63	1.43	1.21	1.09	1.02	1.10
14	7.07	1.41	1.20	1.08	1.01	1.08
15	6.59	1.39	1.18	1.06	1.00	1.06
16	6.17	1.38	1.17	1.05	1.00	1.05
17	5.8	1.36	1.15	1.04	1.00	1.04
18	5.49	1.35	1.14	1.02	1.00	1.03
19	5.17	1.33	1.13	1.01	1.00	1.02
20	4.9	1.31	1.11	1.00	1.00	1.00
21	4.86	1.31	1.11	1.00	1.00	1.00
22	4.43	1.28	1.09	1.00	1.00	1.00
23	4.23	1.27	1.08	1.00	1.00	1.00
24	4.05	1.26	1.06	1.00	1.00	1.00
25	3.87	1.24	1.05	1.00	1.00	1.00
26	3.71	1.23	1.04	1.00	1.00	1.00
27	3.57	1.22	1.03	1.00	1.00	1.00
28	3.43	1.20	1.02	1.00	1.00	1.00
29	3.3	1.19	1.01	1.00	1.00	1.00
30	3.18	1.18	1.00	1.00	1.00	1.00
35	2.68	1.13	1.00	1.00	1.00	1.00
40	2.29	1.08	1.00	1.00	1.00	1.00
45	1.98	1.04	1.00	1.00	1.00	1.00
50	1.73	1.00	1.00	1.00	1.00	1.00

Copyright © 2001 IEEE. All rights reserved.

Copyright The Institute of Electrical and Electronics Engineers, Inc.
Provided by IHS under license with IEEE
No reproduction or networking permitted without license from IHS
Not for Resale

These multiplying factors are based on calculated values for peak currents rather than on laboratory tests. Individual manufacturers may have additional information.

For example, consider a 225 A MCCB with an interrupting rating of 35 000 A to be applied on a circuit with a short-circuit availability of 24 000 A and a power factor of 10%. Select the multiplying factor of 1.13 and multiply the 24 000 A short circuit by it to arrive at the new short circuit of 27 100 A. In this case, the MCCB is suitable for the 27 100 A short circuit because of its 35 000 A rating.

7.6.4 Voltage considerations

The most common industrial and commercial utilization voltage by far is the solidly grounded 480Y/277 V system. Yet, a number of 600 V and 480 V delta systems are in service of both ungrounded and corner-grounded configurations. Further, a growing number of industrial systems are using resistance-grounded 480Y/277 V systems.

Special attention should be given to resistance-grounded wye systems and delta systems with respect to ground faults and single-pole interrupting performance. Consider the single fault to ground in View (a) of Figure 7-13 and the double fault to ground in View (b) of Figure 7-13 in delta systems. In each case, the voltage across the interrupting pole is just below line-to-line voltage. The magnitude of the fault depends on the prospective current and the value of the impedances to ground at the respective faults.

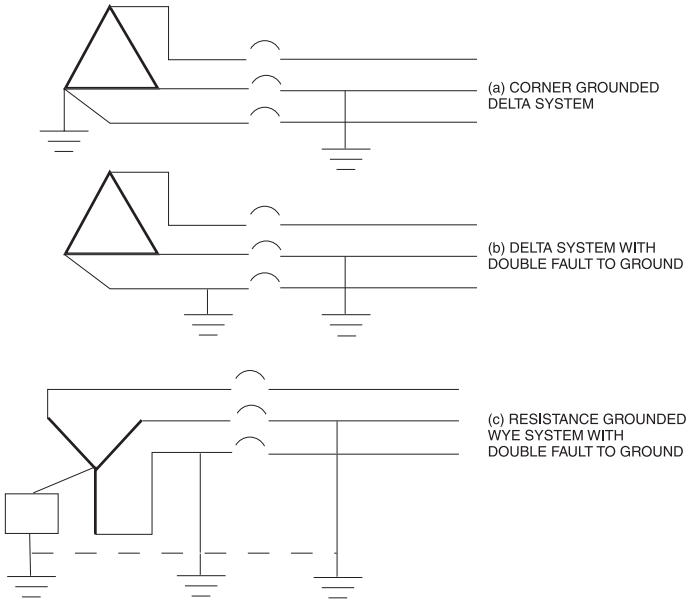

Figure 7-13—Systems requiring special consideration for single-pole faults

Then, consider the resistance-grounded wye system in View (c) of Figure 7-13. With a single fault to ground, the fault current is severely limited by the resistance grounding connection. With two faults to ground, voltage across the interrupting pole is at some value between

Copyright © 2001 IEEE. All rights reserved.

--`,,`-`-`,,`,,`,`,,`---

Copyright The Institute of Electrical and Electronics Engineers, Inc.
Provided by IHS under license with IEEE
No reproduction or networking permitted without license from IHS
Not for Resale

phase voltage and line voltage. Again, the magnitude of the fault depends on the prospective current and the value of the impedances to ground at the respective faults.

For the systems shown in Figure 7-13, straight-rated (or delta-rated) circuit breakers should be used. Referring to Table 7-8 and testing standards, it is known that each circuit breaker pole is tested at phase voltage at full prospective current as part of the three-phase test. Also, each pole is tested individually at line voltage with test currents indicated in Table 7-8. When system conditions are beyond these test values, use of MCCBs tested specifically for corner-grounded delta systems and use of LVPCBs are options.

Table 7-8—Single-pole short-circuit test values for MCCBs[a]

Frame rating	Individual pole short-circuit test values			
	Two-pole circuit breaker		Three-pole circuit breaker	
	(A, rms sym)	Voltage	(A, rms sym)	Voltage
100 A maximum 250 V maximum	5 000	L–L	4 330	L–L
100 A maximum 251–600 V Delta	10 000	L–L	8 660	L–L
101–800 A Delta voltage	10 000	L–L	8 660	L–L
800 A maximum 480Y/277 V or 600Y/347 V	10 000	L–N	10 000	L–N
801–1200 A Delta voltage	14 000	L–L	12 120	L–L
801–1200 A 480Y/277 V or 600Y/347 V	14 000	L–N	14 000	L–N
1201–2000 A Delta voltage	14 000	L–L	14 000	L–L
2001–2500 A Delta voltage	20 000	L–L	20 000	L–L
2501–3000 A Delta voltage	25 000	L–L	25 000	L–L
3001–4000 A Delta voltage	30 000	L–L	30 000	L–L
4001–5000 A Delta voltage	40 000	L–L	40 000	L–L
5001–6000 A Delta voltage	50 000	L–L	50 000	L–L

[a]These test values are the minimum required for certification to UL 489-1991. They are not marked ratings and are printed here to aid the system designer who may need them for single-phase short-circuit analysis. Single-pole circuit breakers are tested at values equal to their interrupting ratings.

Copyright © 2001 IEEE. All rights reserved.

--`,,`-`-`,,`,,`,`,,`---
Copyright The Institute of Electrical and Electronics Engineers, Inc.
Provided by IHS under license with IEEE
No reproduction or networking permitted without license from IHS
Not for Resale

Table 7-9 is provided as a guide for applying the appropriate voltage rating of the MCCB to each system.

Table 7-9—MCCB voltage rating by system configuration

System configuration		Three-pole MCCB voltage rating			
Voltage	**Grounding**	**480Y/277**	**480**	**600Y/347**	**600**
480Y/277	Solid	•	•	•	•
480Y/277	Resistance		• [a]		•
480	Ungrounded		•		•
480	Corner ground		• [a]		•
600Y/347	Solid			•	•
600	Ungrounded				•
600	Corner ground				•

[a]Codes and standards allow 480 V rated MCCBs in these applications. Some manufacturers provide MCCBs specially rated for the corner-grounded delta system to satisfy user preference. These ratings may also be applied to resistance-grounded wye systems. LVPCBs are also an option.

Individual poles of multipole MCCBs are tested at short-circuit levels indicated in Table 7-9 for all values of multipole interrupting ratings. These tests are in addition to multipole tests in which the individual poles are required to interrupt under transient conditions that are more demanding than single-phase tests of the same pole at phase voltage.

7.7 Accessories

Accessories most commonly available are the shunt trip, undervoltage trip, alarm switch, and auxiliary contacts. Ratings and operating characteristics are specific by manufacturer. Some accessories are provided for field installation by qualified electricians. Accessories should be specified by the manufacturer for the specific circuit breaker.

7.8 Conclusions

The following considerations apply to low-voltage circuit breakers for system protection:

a) They combine a switching means with an overcurrent protective device in a compact, generally self-contained unit.

Copyright © 2001 IEEE. All rights reserved.

Copyright The Institute of Electrical and Electronics Engineers, Inc.
Provided by IHS under license with IEEE
No reproduction or networking permitted without license from IHS Not for Resale

b) No exposure to live parts is involved during operation when installed in an approved enclosure.

c) They are resettable. Normally after tripping (and removal of the fault or overload that caused tripping), service may be restored without replacing any part of the assembly. Inspection of the circuit breaker assembly after fault current interruption is required to verify suitability to return the circuit breaker and/or other parts of the system to service. Inspection of the circuit breakers may require replacement of fuses or fuse assemblies after interruption of high-magnitude fault currents. In LVPCBs, most designs allow for replacing components, such as contacts or arc chutes, using instructions from the manufacturer.

d) They provide simultaneous disconnection of all phase conductors.

e) High short-circuit interrupting ratings, the availability of current-limiting circuit breakers, and series-connected interrupting ratings permit application on systems with high available fault currents.

f) The advent of highly complex and technologically advanced electronic trip units has increased circuit breaker versatility and made selective coordination easier.

g) Selection of MCCBs should include consideration of interrupting rating because more than one interrupting rating may be available in the same frame size.

h) Selective coordination of ground-fault protective devices requires time-delay and pickup adjustments and may be enhanced by the presence of adjustments that provide inverse TCCs.

7.9 References

This recommended practice shall be used in conjunction with the following standards. When the following standards are superseded by an approved revision, the revision shall apply.

ANSI C37.13-1990 Low Voltage AC Power Circuit Breakers Used in Enclosures.[2]

ANSI C37.16-2000, American National Standard Preferred Ratings, Related Requirements, and Application Recommendations for Low-Voltage Power Circuit Breakers and AC Power Circuit Protectors.

ANSI C37.50-1989, American National Standard for Switchgear—Low-voltage AC Power Circuit Breakers Used in Enclosures—Test Procedures.

IEEE Std 141-1993, IEEE Recommended Practice for Electric Power Distribution for Industrial Plants *(Red Book)*.

[2]ANSI publications are available from the Sales Department, American National Standards Institute, 11 West 42nd Street, 13th Floor, New York, NY 10036, USA (http://www.ansi.org/).

Copyright © 2001 IEEE. All rights reserved.

--`,,`-`-`,,`,,`,`,,`---
Copyright The Institute of Electrical and Electronics Engineers, Inc.
Provided by IHS under license with IEEE
No reproduction or networking permitted without license from IHS
Not for Resale

IEEE Std C37.100-1992, IEEE Standard Definitions for Power Switchgear.[3]

NEMA AB l-1986, Molded-Case Circuit Breakers.[4]

NEMA AB 3-1991, Molded-Case Circuit Breakers and Their Application.

NEMA PB 2.2-1988, Application Guide for Ground Fault Protective Devices for Equipment.

NFPA 70-1999, National Electrical Code® (NEC®).[5]

UL Recognized Component Directory (Yellow Book), 2001.[6]

UL 489-1996, Molded-Case Circuit Breakers, Molded-Case Switches, and Circuit-Breaker Enclosures, Ninth Edition.

7.10 Bibliography

[B1] ANSI C37.17-1979 (Reaff 1988), American National Standard for Trip Devices for AC and General-purpose DC Low-Voltage Power Circuit Breakers.

[B2] IEC 947-2, Low-Voltage Switchgear and Controlgear, Part 2: Circuit Breakers.[7]

[B3] IEEE Std C37.13-1990, IEEE Standard for Low-Voltage AC Power Circuit Breakers Used in Enclosures.

[B4] NEMA AB 4-1996, Guidelines for Inspection and Preventive Maintenance of Molded Case Circuit Breakers Used in Commercial and Industrial Applications.

[B5] NEMA FU 1-1986, Standard for Low-Voltage Cartridge Fuses 600 Volts or Less.

[B6] NEMA SG 3-1990, Low-Voltage Power Circuit Breakers.

---

[3]IEEE publications are available from the Institute of Electrical and Electronics Engineers, 445 Hoes Lane, P.O. Box 1331, Piscataway, NJ 08855-1331, USA (http://standards.ieee.org/).

[4]NEMA publications are available from Global Engineering Documents, 15 Inverness Way East, Englewood, CO 80112, USA (http://global.ihs.com/).

[5]The NEC is published by the National Fire Protection Association, Batterymarch Park, Quincy, MA 02269, USA (http://www.nfpa.org/). Copies are also available from the Institute of Electrical and Electronics Engineers, 445 Hoes Lane, P.O. Box 1331, Piscataway, NJ 08855-1331, USA (http://standards.ieee.org/).

[6]UL standards are available from Global Engineering Documents, 15 Inverness Way East, Englewood, CO 80112, USA (http://global.ihs.com/).

[7]IEC publications are available from the Sales Department of the International Electrotechnical Commission, Case Postale 131, 3, rue de Varembé, CH-1211, Genève 20, Switzerland/Suisse (http://www.iec.ch/). IEC publications are also available in the United States from the Sales Department, American National Standards Institute, 11 West 42nd Street, 13th Floor, New York, NY 10036, USA.

 Copyright © 2001 IEEE. All rights reserved.

Copyright The Institute of Electrical and Electronics Engineers, Inc.
Provided by IHS under license with IEEE
No reproduction or networking permitted without license from IHS Not for Resale

[B7] Stevenson, W. D., Jr., *Elements of Power System Analysis*. New York: McGraw-Hill, 1982.

[B8] UL 1066-1985, Low-Voltage AC and DC Power Circuit Breakers Used in Enclosures.

Copyright © 2001 IEEE. All rights reserved.

Copyright The Institute of Electrical and Electronics Engineers, Inc.
Provided by IHS under license with IEEE
No reproduction or networking permitted without license from IHS
Not for Resale

Copyright The Institute of Electrical and Electronics Engineers, Inc.
Provided by IHS under license with IEEE
No reproduction or networking permitted without license from IHS
Not for Resale

Chapter 8
Ground-fault protection

8.1 General discussion

In recent years, interest has been increasing in the use of ground-fault protection in electric distribution circuits. One reason for this intensified interest is that ground-fault protection is required by the National Electrical Code® (NEC®) (NFPA 70-1999)[1] on certain service-entrance equipment (see Article 230-95), feeders (see Article 215-10), and remote structures (see Article 240-13) and recommended in NEMA PB 2.2-1999. Further evidence of this interest can be found in the number of feature articles dealing with this subject in today's electrical indoor distribution, construction, and consulting engineering press. These articles and the unusual interest in ground-fault protection are a reaction to a disturbing number of electric failures. One editor reports the cost of arcing faults as follows: "One five-year estimate places the figure between $1 billion and $3 billion annually for equipment loss, production downtime, and personal liability" (see O'Connor [B35]). Manufacturers of ground-fault protection devices have improved the devices and increased the range of devices available so that designers can now confidently apply the devices to isolate damage and avoid unnecessary outages. This chapter explores the need for better ground-fault protection, pinpoints the areas where that need exists, and discusses the solutions that are being applied today.

Distribution circuits that are solidly grounded or grounded through low impedance require fast clearing of ground faults. This need for speed is especially true in low-voltage grounded wye circuits that are connected to busways or long runs of metallic conduit. The problem involves sensitivity in detecting low ground-fault currents as well as coordination between main and feeder circuit protective devices.

The concern for ground-fault protection is based on four factors:

— The majority of electric faults involve ground. Even faults that are initiated phase to phase spread quickly to any adjacent metallic housing, conduit, or tray that provides a return path to the system grounding point. Ungrounded systems are also subject to ground faults and require careful attention to ground detection and ground-fault protection.
— The ground-fault protective sensitivity can be relatively independent of continuous-load current values and, therefore, have lower pickup settings than phase protective devices.
— Because ground-fault currents are not transferred through system power transformers that are connected delta-wye or delta-delta, the ground-fault protection for each system voltage level is independent of the protection at other voltage levels. This configuration permits much faster relaying than can be afforded by phase-protective devices that require coordination using pickup values and time delays that extend

[1]Information on references can be found in 8.7.

Copyright © 2001 IEEE. All rights reserved.

Copyright The Institute of Electrical and Electronics Engineers, Inc.
Provided by IHS under license with IEEE
No reproduction or networking permitted without license from IHS
Not for Resale

from the load to the source generators and often result in considerable time delay at some points in the system.

— Arcing ground faults that are not promptly detected and cleared can be destructive.

Much of the present emphasis on ground-fault protection centers on low-voltage circuits, 600 V or less. Low-voltage circuit protective devices have usually involved fused switches or circuit breakers with integrally mounted series tripping devices. These protective elements are termed *overload* or *fault overcurrent devices* because they carry the current in each phase and clear the circuit only when the current reaches a magnitude greater than full-load current. To match insulation damage curves of conductors and to accommodate motor and transformer inrush currents, phase-overcurrent devices are designed with inverse characteristics that are slow at overcurrent values up to about five times rating. For example, a 1600 A low-voltage circuit breaker with conventional phase protection clears a 3200 A fault in about 100 s, although it can be adjusted in a range of roughly 30 s to 200 s at this fault value. A 1600 A fuse may require 10 min or more to clear the same 3200 A fault. These low values of fault currents are associated predominantly with faults to ground and generally have received little attention in the design of low-voltage systems until the occurrence of a number of serious electric failures in recent years. Arcing fault phenomena surfaced in the late 1940s and early 1950s with the advent of 480Y/277 V systems. In contrast, on grounded systems of 2400 V and above, applying some form of ground-fault protection has long been standard practice.

This chapter is primarily directed to ground-fault protection of major portions of circuits and equipment. The discussions relate to various forms of ground-fault protection to prevent excessive damage to electrical equipment with current sensitivity in the order of amperes to hundreds of amperes.

Although its purpose is to disconnect faulty parts of an electric system, to preserve service continuity in other parts, and to limit ejection of gases and molten metal or to localize faults, ground-fault protection does not satisfy rigid requirements regarding employee flash hazard protection, shock hazards, or touch potentials that are designed for protection of people and necessitate milliampere sensitivity and may only be feasible for small loads.

The action initiated by ground-fault sensing devices should vary depending on the installation. In some cases, such as services to dwellings, immediately disconnecting the faulted circuit may be necessary to prevent loss of life or property. However, the opening of some circuits in critical applications may in itself endanger life or property. Therefore, each particular application should be studied carefully before selecting the action to be initiated by the ground-fault protective devices.

8.2 Types of systems relative to ground-fault protection

A comprehensive discussion of grounded and ungrounded systems is given in Chapter 1 of IEEE Std 142-1991. When considering the choice of grounding, determining the types of ground-fault protection available and their effect on system performance, operation, and safety are important.

 Copyright © 2001 IEEE. All rights reserved.

Copyright The Institute of Electrical and Electronics Engineers, Inc.
Provided by IHS under license with IEEE
No reproduction or networking permitted without license from IHS Not for Resale

An ungrounded system has no intentional connection to ground except through potential-indicating or potential-measuring devices or through surge protective devices. While a system is called ungrounded, it is actually coupled to ground through the distributed capacitance of its phase windings and conductors.

A grounded system is intentionally grounded by connecting its neutral or one conductor to ground, either solidly or through a current-limiting impedance. Various degrees of grounding are used ranging from solid to high impedance, usually resistance.

Figure 8-1 shows ungrounded and grounded systems and their voltage relationships. The terms solidly grounded and direct grounded have the same meaning, that is, no intentional impedance is inserted in the neutral-to-ground connection.

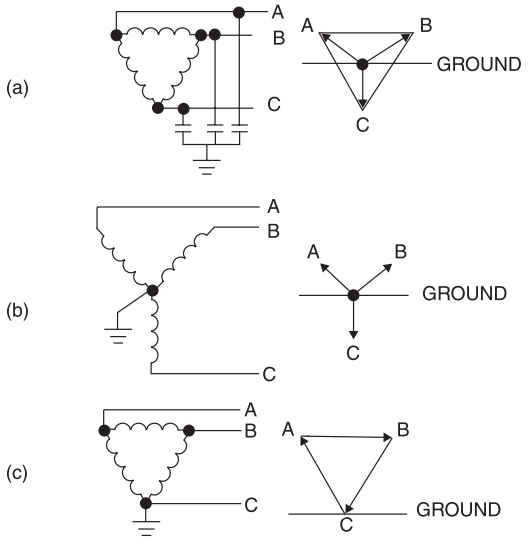

a) Ungrounded system, showing system capacitance to ground
b) Grounded wye-connected system
c) Grounded delta-connected system

Figure 8-1—Voltages to ground under steady-state conditions

8.2.1 Classification of system grounding

The types of system grounding normally used in industrial and commercial power systems are

— Solid grounding
— Low-resistance grounding
— High-resistance grounding
— Ungrounded

Copyright © 2001 IEEE. All rights reserved.

Copyright The Institute of Electrical and Electronics Engineers, Inc.
Provided by IHS under license with IEEE
No reproduction or networking permitted without license from IHS
Not for Resale

Each type of grounding has advantages and disadvantages, and no one method is generally accepted. Factors that influence the choice include

a) Voltage level of power system
b) Transient overvoltage possibilities
c) Type of equipment on the system
d) Required continuity of service
e) Caliber and training of operating and maintenance personnel
f) Methods used on existing systems
g) Availability of convenient grounding point
h) The NEC
i) Cost of equipment, including protective devices and maintenance
j) Safety, including fire and shock hazard
k) Tolerable fault damage levels
l) Effect of voltage dips during faults
m) Availability of high enough single-pole interrupting ratings on protective devices (see NEMA PB 2.2-1999)

Many factors are involved in selecting grounding methods for the different voltage levels found in power distribution systems. IEEE Std 142-1991 discusses many of these factors in detail, while the following discussion mentions only the reasons that relate to ground-fault protection.

8.2.2 Solid grounding

Most industrial and commercial power systems are supplied from electric utility systems that are solidly grounded (see Figure 8-2). If the user must immediately convert to lower voltage, the power transformers typically have a delta-connected primary and a wye-connected secondary that can again be connected solidly to ground. This configuration results in a system that can be conveniently protected against overvoltages and ground faults. The system has flexibility because the neutral can be carried with the phase conductors, and this feature permits connecting loads from phase to phase and from phase to neutral.

a) *Systems above 600 V.* Ground relaying of medium-voltage and high-voltage systems that are solidly grounded has been successfully accomplished for many years using residually connected ground relays or zero-sequence sensing. The circuit breakers normally have current transformers (CTs) to provide the signal for the phase-overcurrent relays, and the ground-overcurrent relay is connected in the wye point (i.e., residual) to provide increased sensitivity for ground faults. Ground-fault magnitudes usually are comparable to phase-fault magnitudes and are, therefore, easily detected by relays or fuses unless they occur in equipment windings near the neutral point.
b) *Systems 600 V and below.* All 208 V systems are solidly grounded so that loads can be connected from line to neutral to provide 120 V service. Similarly, all 480 V systems that are to serve 277 V lighting should also be solidly grounded. As a result of this requirement, 480 V systems in most commercial buildings and many industrial plants are solidly grounded. Even where 277 V lighting is not used, 480 V systems in

 Copyright © 2001 IEEE. All rights reserved.

Copyright The Institute of Electrical and Electronics Engineers, Inc.
Provided by IHS under license with IEEE
No reproduction or networking permitted without license from IHS Not for Resale

many industrial plants are solidly grounded to limit overvoltages and to facilitate clearing ground faults.

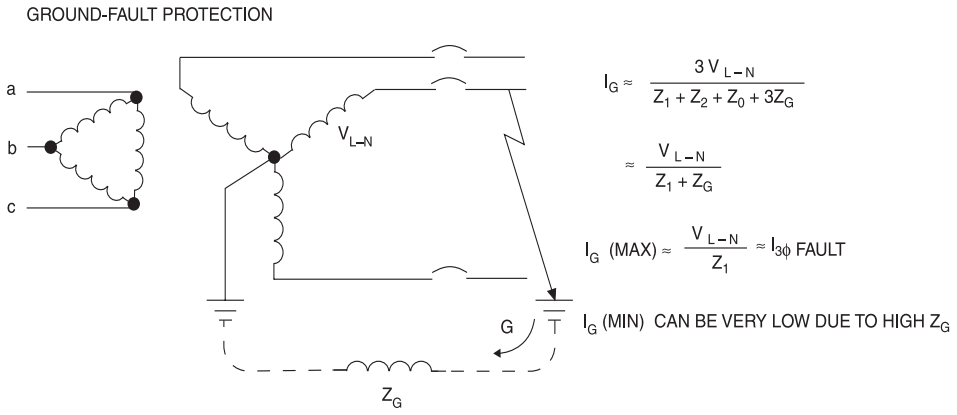

Figure 8-2—Direct or solid grounding (uses ground relays to trip)

While higher voltage systems normally use relays with sensitive ground-fault elements, low-voltage systems usually use circuit breakers with integrally mounted trip devices in the phases or fusible switches with relays and shunt trips. Because solidly grounded low-voltage systems can experience relatively low ground-fault currents, sensitive ground-fault relays and trip devices have been developed for use with low-voltage circuit breakers and bolted pressure switches.

One disadvantage of the solidly grounded 480 V system involves the high magnitude of destructive, arcing ground-fault currents that can occur. However, if these currents are promptly interrupted, the equipment damage is kept to acceptable levels. While low-voltage systems can be resistance-grounded, resistance grounding restricts the use of line-to-neutral loads.

Another characteristic of solidly grounded 480 V systems is that the ground fault may cause immediate forced outages. If such outages cannot be tolerated, then either the high-resistance-grounded systems (without ground-fault tripping) or the ungrounded systems are used to delay the required outage for repairs. On the other hand, immediate removal of a faulty circuit is usually desirable.

8.2.3 Low-resistance grounding

The low-resistance-grounded system (see Figure 8-3) is similar to the solidly grounded system in that transient overvoltages are not a problem. Low-resistance grounding is used on medium-voltage systems, but not on low-voltage systems. The resistor is selected to limit ground-fault current magnitudes, but leave the current high enough to be detected by sensitive relays. The resistor is normally selected to limit ground fault in the range of 200 A to 500 A and is rated for approximately 10 s. Higher rated resistors are necessary when a

Copyright © 2001 IEEE. All rights reserved.

Copyright The Institute of Electrical and Electronics Engineers, Inc.
Provided by IHS under license with IEEE
No reproduction or networking permitted without license from IHS
Not for Resale

number of relaying steps exist. Multisource system ground faults as high as 800 A to 1600 A can be anticipated. The magnitude of the grounding resistance is selected to allow sufficient current for ground-fault relays to detect and clear the faulted circuit. This type of grounding is used mainly in 2.4 kV to 13.8 kV systems, which often have motors directly connected.

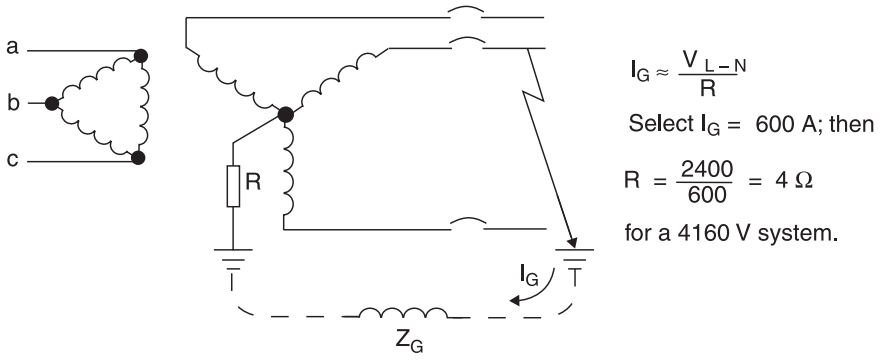

Figure 8-3—Low-resistance grounding (uses ground relays to trip)

The value of resistance also relates to the type of relaying and the percentage of motor windings that can be protected. Ground faults in wye-connected motors have reduced driving voltage as the neutral of the motor winding is approached; thus, ground-fault current magnitudes are reduced.

8.2.4 High-resistance grounding

High-resistance grounding (see Figure 8-4a and Figure 8-4b) limits first fault-to-ground currents to very low values. The fault current magnitude is predictable regardless of the location of the fault because the grounding resistor inserted in the neutral is large compared to the impedance of the remainder of the ground-fault path. High-resistance grounding schemes, especially at medium voltages, connect a distribution transformer between the neutral and ground, with a resistor on the transformer secondary. The transformer primary is rated for line-to-line voltage, and a 240 V secondary limits the secondary voltage to a convenient 139 V maximum.

High-resistance grounding helps ensure a ground-fault current of known magnitude, making it possible to identify the faulted feeder with sensitive ground-fault relays, which are available with fault sensitivity in the range of small fractions of an ampere. If the resistance is chosen so that the fault current is equal to or slightly larger than the charging current of the system, transient overvoltages are reduced. Charging current can be calculated or measured and is usually under 2 A for low-voltage systems and up to 5 A or 10 A for medium-voltage systems.

Ground-fault currents of this magnitude seldom require immediate tripping. Thus high-resistance grounding can often maintain continuity of service under first ground-fault conditions

 Copyright © 2001 IEEE. All rights reserved.

Copyright The Institute of Electrical and Electronics Engineers, Inc.
Provided by IHS under license with IEEE
No reproduction or networking permitted without license from IHS Not for Resale

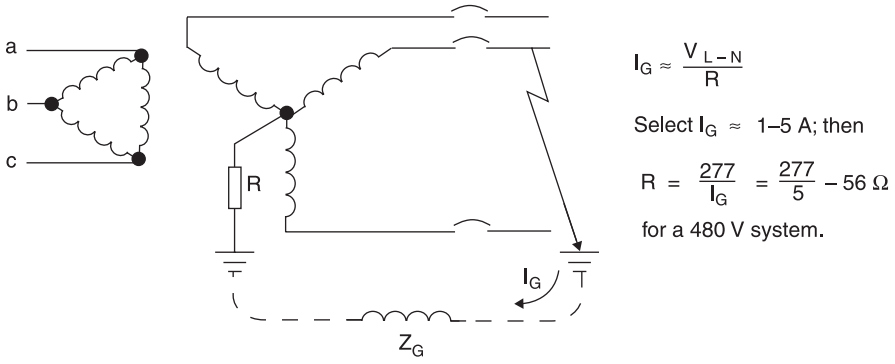

Figure 8-4a—High-resistance grounding (may use ground relays to alarm on first fault, trip on second fault)

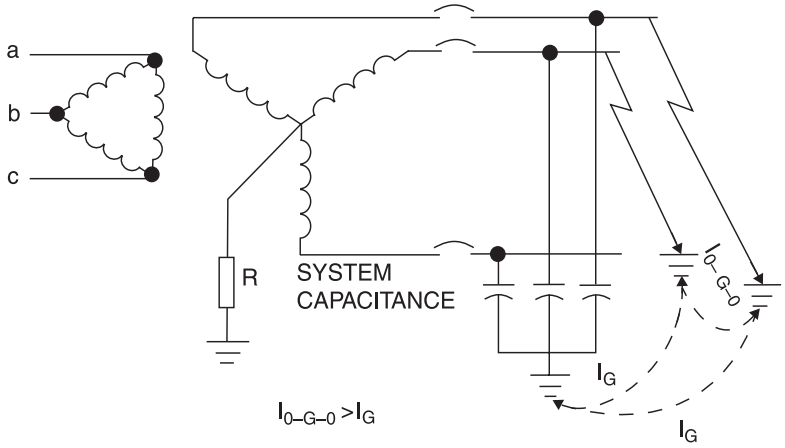

Figure 8-4b—High-resistance grounding with phase-to-ground-to-phase fault

until a favorable time for an outage to clear the fault, provided the cable carrying the fault is rated 173% of the voltage level. If a second ground fault occurs on another phase before the first fault is cleared, a phase-to-ground-to-phase fault occurs that is not limited by the neutral grounding resistor (see Figure 8-4b). The second fault may be an arcing fault, whose magnitude is limited by the ground-path impedance to a value high enough to cause severe arcing damage, but too low to activate the overcurrent devices quickly enough to prevent or limit this damage. For this reason, systems of 13.8 kV and higher generate too much heat to justify a delay in tripping. Two-level relays are available that alarm on first (or low) fault, but trip on second (or high) fault in time to prevent arcing burndowns. One final consideration for resistance-grounded systems is the necessity to apply overcurrent devices based on their single-pole

Copyright © 2001 IEEE. All rights reserved.

Copyright The Institute of Electrical and Electronics Engineers, Inc.
Provided by IHS under license with IEEE
No reproduction or networking permitted without license from IHS
Not for Resale

short-circuit interrupting rating, which can be equal to, or in some cases less than, their normal rating (see IEEE Std 141-1993).

8.2.5 Ungrounded systems

Ungrounded low-voltage systems (see Figure 8-5a and Figure 8-5b) employ ground detectors (e.g., lamps or voltmeters connected from each phase to ground) to indicate a ground fault. These detectors show the existence of a ground on the system and identify the faulted phase, but do not locate the ground, which could be anywhere on the entire system. The system operates with the ground fault acting as the system ground point. The ground-fault current that flows is the capacitive charging current of the system, generally only a few amperes.

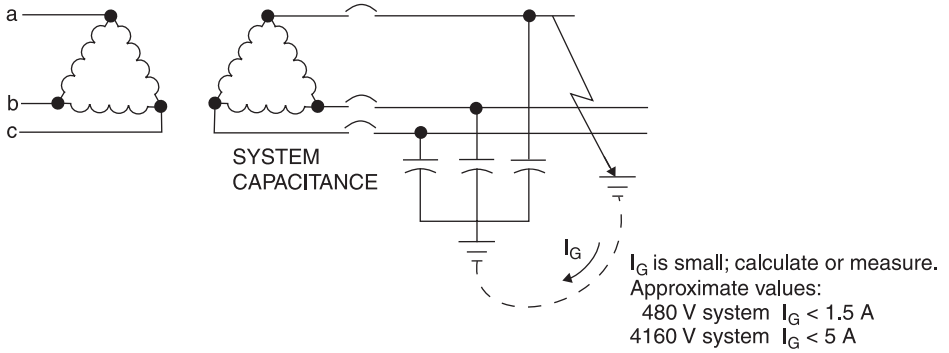

Figure 8-5a—Ungrounded system (uses bus ground detector to alarm and has potential for possible overvoltage problem)

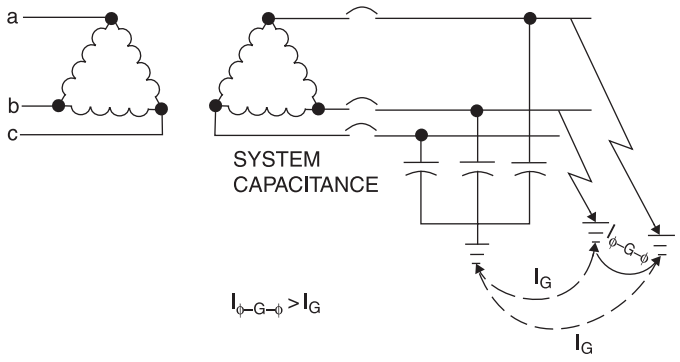

Figure 8-5b—Ungrounded system with phase-to-ground-to phase fault

If this ground fault is intermittent or allowed to continue, the system could be subjected to possible severe overvoltages to ground, which can be as high as six or eight times phase

Copyright © 2001 IEEE. All rights reserved.

Copyright The Institute of Electrical and Electronics Engineers, Inc.
Provided by IHS under license with IEEE
No reproduction or networking permitted without license from IHS
Not for Resale

voltage. Such overvoltages can puncture insulation and result in additional ground faults. These overvoltages are caused by repetitive charging of the system capacitance or by resonance between the system capacitance and the inductances of equipment in the system.

A second ground fault occurring before the first fault is cleared results in a phase-to-ground-to-phase fault, usually arcing, with current magnitude large enough to do damage, but sometimes too small to activate the overcurrent devices in time to prevent or minimize damage.

Ungrounded systems offer no advantage over high-resistance-grounded systems in terms of continuity of service and have the disadvantages of transient overvoltages, difficulty in locating the first ground fault, and burndowns from a second ground fault. For these reasons, they are being used less frequently today than high-resistance-grounded systems, and existing ungrounded systems are often converted to high-resistance-grounded systems by resistance-grounding the neutral if it exists or, if the system is fed from a delta source, by creating a neutral point with a zigzag or other transformer and then resistance-grounding it.

Once the system is high-resistance-grounded, overvoltages are reduced; and modern, highly sensitive ground-fault protective equipment can identify the faulted feeder on first fault and open one or both feeders on second fault before an arcing burndown does serious damage. One final consideration for ungrounded systems is the necessity to apply overcurrent devices based upon their single-pole short-circuit interrupting rating, which can be equal to, or in some cases less than, their normal rating (see IEEE Std 141-1993).

8.3 Nature, magnitudes, and damage of ground faults

Ground faults on electric systems can originate in many ways, have a wide range of magnitudes, and cause varying amounts of damage. The most serious faults from the standpoint of rate of eroded material are arcing faults, both phase to phase and phase to ground.

8.3.1 Origin of ground faults

Ground faults originating from insulation breakdown can be classified, roughly, as follows:

a) Reduced insulation (e.g., due to moisture, atmospheric contamination, foreign objects, insulation deterioration)
b) Physical damage to insulation system (e.g., due to mechanical stresses, insulation punctures)
c) Excessive transient or steady-state voltage stresses on insulation

Good installation and maintenance practices ensuring adequate connections and the integrity of the insulation of the equipment have a significant effect in reducing the probability of ground faults. However, insulation breakdowns to ground can occur at any point in the system where phase conductors are in close proximity to a grounded reference. The contact between the phase conductor and ground is usually not a firm metallic contact, but rather usually includes an arcing path in air or across an insulating surface, or a combination of both. In

Copyright © 2001 IEEE. All rights reserved.

--`,,`-`-`,,`,,`,`,,`---

Copyright The Institute of Electrical and Electronics Engineers, Inc.
Provided by IHS under license with IEEE
No reproduction or networking permitted without license from IHS
Not for Resale

addition to these arcing ground faults, certain bolted faults occur, usually during installation or maintenance, when an inadvertent firm metallic connection is made from phase to ground.

8.3.2 Magnitude of ground-fault currents

Ground-fault current magnitudes can vary greatly. Using the method of symmetrical components (see Chapter 2), the single line-to-ground fault current I_{GF} is calculated by the formula:

$$I_{GF} = \frac{3V_{L-N}}{Z_1 + Z_2 + Z_0 + 3Z_G}$$

where

Z_1 is the positive-sequence impedance,
Z_2 is the negative-sequence impedance,
Z_0 is the zero-sequence impedance.
Z_G is the combined impedance of the ground return circuit, including the fault arc impedance, the grounding circuit impedance, and the intentional neutral impedance, when present.

To illustrate how ground-fault currents can vary greatly in magnitude, consider a solidly grounded system with a bolted ground fault close to the generator terminals. In this example, Z_G could approach zero; and, assuming $Z_1 = Z_2 = Z_0$, then,

$$I_{GF} = \frac{V_{L-N}}{Z_1}$$

which is actually the formula for a bolted three-phase fault. In fact, with many generators, because Z_0 is smaller than Z_1, it is necessary to add an intentional neutral impedance Z_N to reduce the bolted ground-fault current to the magnitude of the bolted three-phase fault current.

For a ground fault in a high-resistance-grounded system, the neutral resistance R_N is large compared to Z_1, Z_2, Z_0, and the remainder of Z_G. Then, I_{GF} is approximately equal to $V_{L–N}$ divided by R_N.

For example, in a high-resistance-grounded 480 V system with a neutral resistance of 20 Ω, the ground-fault current is

$$I_{GF} = \frac{480/\sqrt{3}}{20} = 14 \text{ A}$$

This approximation is true because the fault arc impedances and the ground-circuit impedances are negligible when compared to 20 Ω.

Copyright © 2001 IEEE. All rights reserved.

Copyright The Institute of Electrical and Electronics Engineers, Inc.
Provided by IHS under license with IEEE
No reproduction or networking permitted without license from IHS Not for Resale

Precise calculation of low-voltage ground-fault current magnitudes in solidly grounded systems is much more difficult than the previous example. The reason is that the circuit impedances, including the fault arc impedance, that were negligible in the high-resistance example play an important part in reducing ground-fault current magnitudes. This applies even in most cases where a sizable grounding conductor is carried along with phase conductors.

The primary consideration in applying ground-fault protection is whether a selectively coordinated system can be achieved and, if not, to establish the extent to which lack of selectivity is acceptable.

The two main setting characteristics that need to be determined for ground-fault relays are

— Minimum operating current
— Speed of operation

Selection of the minimum operating current (or pickup) setting is based primarily on the characteristics of the circuit being protected. If the circuit serves an individual load (e.g., a motor, transformer, heater circuit), then the pickup setting can be low, such as 5 A to 10 A. If the protected circuit feeds multiple loads, each with individual overcurrent protection [e.g., a panelboard, feeder duct, motor control center (MCC)], the pickup settings are higher. These higher settings (in the order of 200 A to 1200 A) are selected to allow the branch phase-overcurrent devices to clear low-magnitude ground faults in their respective circuits, if coordination is possible. Furthermore, low-level faults in some parts of the system may be self-extinguishing and, therefore, allow uninterrupted operation of other equipment.

8.3.3 Damage due to arcing faults

The arcing fault causes a large amount of energy to be released in the arcing area. The ionized products of the arc spread rapidly. Vaporization at both arc terminals occurs, and the erosion at the electrodes is concentrated when the arc does not travel. While the arc tends to travel away from the source, this movement does not necessarily occur at low levels of fault current or at higher levels of current in circuits with insulated conductors. If an arcing fault is allowed to persist indefinitely, it is a potential fire hazard, causes considerable damage, may result in a more extended power outage, and subjects nearby employees to burns from arc flash.

Shunt trip fusible switches can be equipped with antisingle-phasing provisions that consist of installing small actuator fuses in parallel with the line fuses in the switch. When a line fuse opens, these fuses also open and subsequently close a contact to actuate a signal or switch-opening circuit to open all three poles of the switch. Figure 8-6 shows this particular scheme, which can also be used in conjunction with ground-fault protective relaying. Other equipment utilizes voltage relays in place of the actuator fuses to trip interrupter switches. These antisingle-phasing devices are often specified to clear a ground fault that may cause only one fuse to open. If the fault remains and is of such high impedance that it does not open any fuses in any other phases, the opening of the first fuse causes all three poles of the switch to open and the fault is cleared.

Copyright © 2001 IEEE. All rights reserved.

Copyright The Institute of Electrical and Electronics Engineers, Inc.
Provided by IHS under license with IEEE
No reproduction or networking permitted without license from IHS Not for Resale

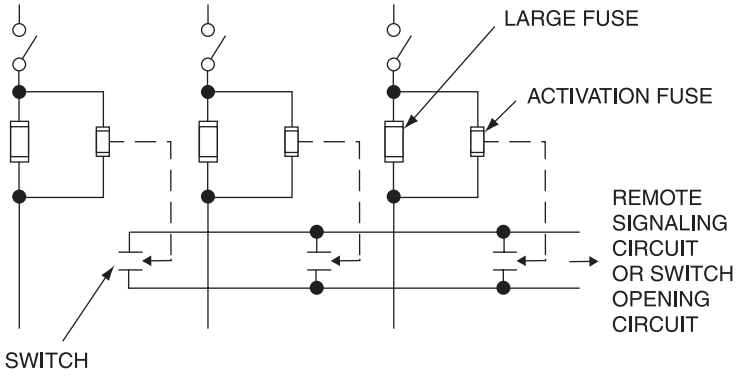

Figure 8-6—Antisingle-phasing provisions for fusible switches

Fused circuit breakers and service protectors, as well as circuit breakers, have antisingle-phasing devices incorporated in their basic designs.

The basic need for ground-fault protection in low-voltage grounded systems is illustrated in Figure 8-7a and Figure 8-7b. A 1000 kVA transformer, with a 1600 A main circuit breaker and typical long-time and short-time characteristics, optionally with a fused switch, is shown.

A 1500 A ground fault (Point I) on the 480Y/277 V grounded neutral system would not be detected by the main circuit breaker or fuse. A ground relay set at 0.2 s time delay would cause the circuit breaker or bolted pressure switch to clear the fault in about 0.33 s. A 4000 A ground fault (Point II) could persist for about 33 s, even if the circuit breaker's minimum long-time band were used. The fuse would require up to 5 min to clear this fault. The ground-relayed circuit breaker or bolted pressure switch would clear the fault in about 0.25 s. An 8000 A ground fault (Point III) would be cleared within about 0.2 s to 0.4 s by the circuit breaker short-time device, assuming it is present; otherwise, between 8 s to 20 s would elapse before the long-time device clears the fault.

Arc energies for these assumed faults are tabulated in Table 8-1. Arc voltages are assumed to be 100 V. Because the arc voltage tends to have a flat top characteristic (nonlinear arc resistance), the energy of the arc in watts per second can be estimated by obtaining the product of the current in rms amperes, the arc voltage in volts, and the clearing time in seconds. Approximate calculation of the energy required to erode a certain amount of electrode material shows that 50 kWs of energy divided equally between conductor and enclosure vaporizes about 2.05 cm^3 of aluminum or 0.82 cm^3 of copper. The calculation assumes that most of the arc energy goes into the electrodes, while the energy lost to the surrounding air is neglected. Comparisons were made from several arcing fault tests (see Conrad and Dalasta [B10]; Fisher [B14]), and good correlation was obtained between calculated energy from test data and measured conductor material eroded.

Copyright © 2001 IEEE. All rights reserved.

Copyright The Institute of Electrical and Electronics Engineers, Inc.
Provided by IHS under license with IEEE
No reproduction or networking permitted without license from IHS
Not for Resale

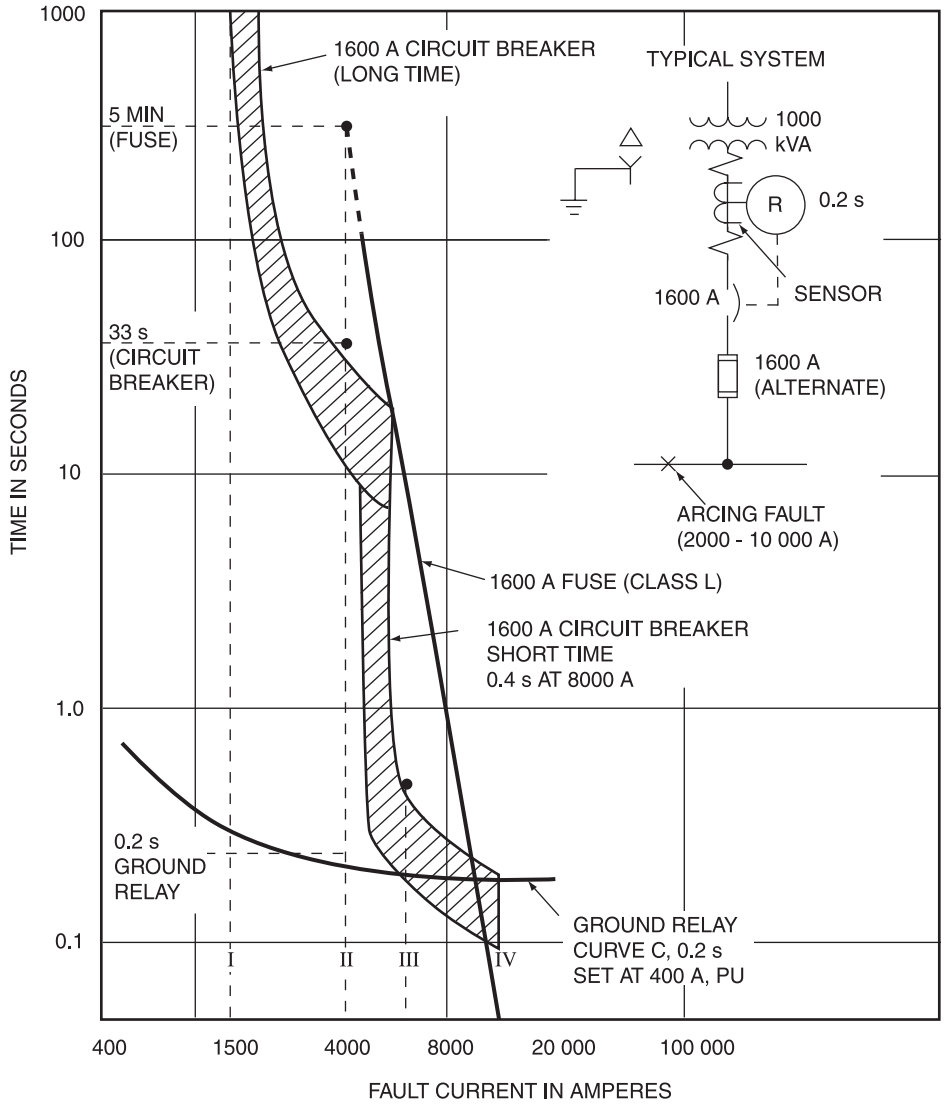

Figure 8-7a—Time-current plot showing slow protection provided by phase devices for low-magnitude arcing ground faults

Copyright © 2001 IEEE. All rights reserved.

Copyright The Institute of Electrical and Electronics Engineers, Inc.
Provided by IHS under license with IEEE
No reproduction or networking permitted without license from IHS
Not for Resale

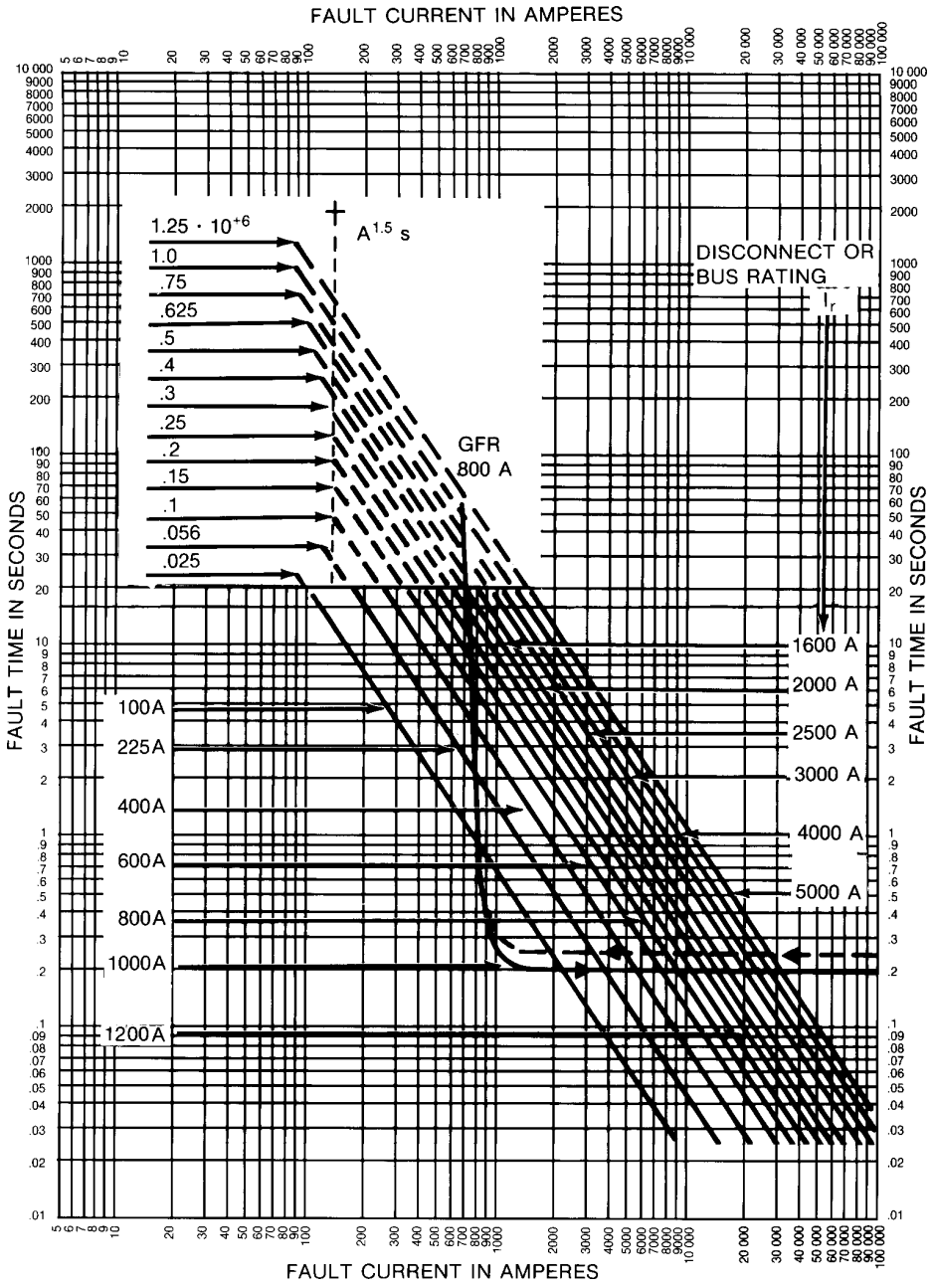

Figure 8-7b—Assumed tolerable damage levels

Copyright © 2001 IEEE. All rights reserved.

Copyright The Institute of Electrical and Electronics Engineers, Inc.
Provided by IHS under license with IEEE
No reproduction or networking permitted without license from IHS
Not for Resale

Table 8-1—Arc energies for assumed faults of Figure 8-7a

Figure 8-7a points	Fault (A, rms)	Main device	Clearing time (s)	Arc energy (kWs)
I	1500	Relay Circuit breaker Fuse	0.33 ∞ ∞	50 ∞ ∞
II	4000	Relay Circuit breaker Fuse	0.25 33.00 300.00	100 13 200 120 000
III	8000	Relay Circuit breaker Fuse	0.25 0.4 10.00	200 320 8000
IV	20 000	Relay Circuit breaker Fuse	0.25 0.20 0.01	500 400 20

For the assumed 8000 A fault, even though the current values are the calculated result using all source, circuit, and arc impedances, the actual rms current values passing through the circuit breaker can be considerably lower. The reason is the spasmodic nature of the fault caused by

— Arc-elongating blowouts effects
— Physical flexing of cables and some bus structures due to mechanical stresses
— Self-clearing attempts and arc reignition
— Shifting of the arc terminals from point to point on the grounded enclosures (and on the faulted conductors for noninsulated construction)

All of these effects tend to reduce the rms value of arcing fault currents. Therefore, a ground fault that would normally produce 8000 A under stabilized conditions might well result in an effective value of only 4000 A and would have the arc energies associated with Point II in Table 8-1.

Expressing acceptable damage in terms of kWs, or kW cycle units, with an assumption of 100 V arc drop in 480Y/277 V circuits has been proposed.

Investigations show that damage in standard switchboards at normal arc lengths is proportional to time and 1.5 power of ground-fault current magnitude (see Stanback [B42]). Thus, the arc voltage magnitude question at varying and unpredictable fault currents may be excluded and damage prediction simplified.

Copyright © 2001 IEEE. All rights reserved.

Copyright The Institute of Electrical and Electronics Engineers, Inc.
Provided by IHS under license with IEEE
No reproduction or networking permitted without license from IHS
Not for Resale

According to the study, specific damage or burning rate

$$k_s = \frac{\text{damaged volume } V_D}{\text{current}^{1.5} \times \text{time}} [\text{in}^3 / \text{A}^{1.5}\ \text{s}]$$

with

k_s is 1.18×10^{-5} $\text{cm}^3/\text{A}^{1.5}\text{s}$ for copper,

k_s is 2.49×10^{-5} $\text{cm}^3/\text{A}^{1.5}\text{s}$ for aluminum,

k_s is 1.08×10^{-5} $\text{cm}^3/\text{A}^{1.5}\text{s}$ for steel.

Because selection of conductors is often based on nearly uniform current densities (e.g., 125–155 A/cm^2), acceptable damage could then be based on conductor or disconnect ratings or on cross-sectional area.

Thus, if based on

$$I_F^{1.5} t = k_e I_R$$

where

I_F is fault current,

I_R is disconnect or bus rating,

the acceptable damage $V_D = k_s k_e I_R$ can be used as a constant for a given system and disconnect rating. Acceptable damage could then be held by appropriate selection of current and time settings for ground-fault protective devices.

For example, if I_R = 1000 A and k_e = 250 [$\text{A}^{0.5}$ s] (as assumed in NEMA PB 2.2-1999) acceptable damage,

$$I^{1.5} t = 250 \times 1000 = .025 \times 10^{+6}\ [\text{A}^{1.5}\ \text{s}], \text{ or}$$

$$V_D = 1.18 \times 10^{-5} \times 0.25 \times 10^6 = 2.95\ \text{cm}^3 \text{ for copper,}$$

conductors are not exceeded for faults between 800 A and 10 000 A, with relay settings as shown in Figure 8-7b if clearing time of the circuit breaker or bolted pressure switch does not exceed 200 ms.

The above computations are based on 277 V single-phase test results and the assumption that the damage would be proportional to the arcing fault current. Therefore, some discretion should be used when referencing the example in Figure 8-7b (see Love [B32]).

Copyright © 2001 IEEE. All rights reserved.

Copyright The Institute of Electrical and Electronics Engineers, Inc.
Provided by IHS under license with IEEE
No reproduction or networking permitted without license from IHS Not for Resale

8.3.4 Selection of low-voltage protective device settings

Maximum protection against ground faults can be obtained by applying ground protection on every feeder circuit from source to load. The minimum operating current for all series devices may be set at about the same pickup setting, but the time curves are selected so that each circuit protective device is opened progressively faster, moving from the source to the load. The load switching device can be opened instantaneously or with brief delay upon occurrence of a ground fault.

The delay required between devices is determined by the addition of

— The trip-operating time of the overcurrent device
— The clearing time of the overcurrent device
— A margin of safety

The trip-operating time of today's molded-case circuit breakers (MCCBs), service protectors, power circuit breakers, or shunt-tripped switches is usually about 3 cycles. Current-limiting fuses clear in about .004 s when operating in their current-limiting range.

This coordination by time delay is similar to other overcurrent coordination. However, another method of coordination, called zone selective interlocking (ZSI), is available for ground-fault protection using solid-state relays and electronic trip devices. Ground faults, for minimum damage, should be cleared as quickly as possible regardless of their magnitude. Zone coordination assures instantaneous tripping of all ground-fault relays for faults within their zone of protection, with upstream devices restrained to a time delay in response to ground faults outside their zone. This restraining signal requires as few as one pair of wires from the downstream zone to the upstream relay to carry the interlocking signal. ZSI provides the fastest tripping, for minimum damage, with full coordination so that only the affected part of the system is shut down on ground fault. ZSI is discussed further in 8.5.4.1.

Bolted-pressure and high-pressure contact fused switches using the ground-fault protection schemes can be shunt tripped to open quickly.

From the standpoint of damage alone, speed of clearing is paramount. However, in some situations, delay is desirable, primarily to obtain coordination between main and feeder circuits and branch currents. Consider a typical 480Y/277 V application consisting of a 3000 A main, an 800 A feeder, and a 100 A branch circuits. If the branch circuits do not have ground-fault protection, then the feeder ground-fault protection should be set with a time delay to allow the branch circuit phase-overcurrent device to clear moderately high-magnitude ground-fault currents without opening the feeder through its ground-fault protection. When full coordination is essential, setting the feeder ground-fault pickup above and to the right of the branch circuit devices is desirable. While infrequent loss of coordination may be acceptable between feeders and branch circuits, full coordination should be maintained between main and feeder overcurrent protective devices. Setting main service ground-fault protection at less than 0.1 s (or 6 cycle) response time is generally not recommended. Proper settings reduce effects of inrush, startups, and switching currents and prevent nuisance openings.

Copyright © 2001 IEEE. All rights reserved.

Copyright The Institute of Electrical and Electronics Engineers, Inc.
Provided by IHS under license with IEEE
No reproduction or networking permitted without license from IHS
Not for Resale

Another reason for delayed clearing of ground faults on main or large feeder circuits is the threat of circuit interruption where the power outage itself is of greater consequence than the incremental difference in fault damage.

In summary, the sensitivity (or minimum operating current setting) of ground-fault protection in solidly grounded low-voltage systems is determined by the following considerations:

a) When the ground-fault protection is used on devices protecting individual loads, such as motors, the lowest available settings can be used, providing the devices do not cause false opening from inrush currents.

b) For the main and feeder circuits, the setting for ground-fault protective devices is normally in the range of 10% to 100% of the circuit trip rating or fuse rating. If downstream devices do not have ground-fault protection, then the circuit ground-fault protection may have to be set higher than the downstream phase-protective device opening characteristics to ensure full coordination. Many times, the main ground-fault protection needs to be set at the code maximum of 1200 A in order to selectively coordinate with the downstream phase- and ground-fault protection.

8.3.5 Sensing, relaying, and trip devices

The signal for ground-fault protective devices may be derived from the residual of phase CTs, window CTs, or sensors. The CTs or sensors provide isolation between main busses and relaying equipment and should be located in a specific path to detect proper ground-fault currents under all operating conditions.

Sensors are often designed with other than 5 A or 1 A nominal secondary rating and for use with specific relays or trip devices as a system. If part of such a system, the relays normally have dials marked in terms of primary ground-fault current amperes.

Ground-fault relays or trip devices may be either self-powered (i.e., fault current) or externally powered (i.e., operation or trip power), or incorporate both methods. Outputs may be contact or solid-state (e.g., thyristors).

AC control power, derived from an auxiliary transformer of proper capacity, is frequently used in systems of 600 V and below and is sometimes supplemented by capacitor trips. The primaries of control power transformers should be connected line to line to reduce effects of voltage dips during ground faults, and the trip device should be capable of operating at 0.866 times rated voltage. The need for overcurrent protection and transfer to an alternate control power source should be evaluated.

Supplementary or backup ground-fault protection may be accomplished by monitoring the equipment environment. Such systems detect ionized gases and other fault-current by-products, such as abnormal light and heat. By early detection of one or more of the by-products of a ground-fault current and prompt opening of the interrupting device serving the fault, the magnitude of the damage may be reduced. Supplementary sensing is particularly desirable when the primary means of ground-fault sensing is set relatively high to prevent nuisance opening or to satisfy coordination requirements. To maximize the

 Copyright © 2001 IEEE. All rights reserved.

Copyright The Institute of Electrical and Electronics Engineers, Inc.
Provided by IHS under license with IEEE
No reproduction or networking permitted without license from IHS Not for Resale

effectiveness of environmental detectors, care should be exercised in the selection, proper installation within the equipment enclosure, and setting of the detectors (see Neuhoff [B34]).

8.4 Frequently used ground-fault protective schemes

While ground-fault protective schemes may be elaborately developed, depending on the ingenuity of the relaying engineer, nearly all schemes in common practice are based on one or more of the following methods of ground-fault detection:

— Residually connected overcurrent relays
— Core balance sensing of feeder conductors
— Detection of ground-return current in the equipment grounding circuit
— Differential relaying

8.4.1 Residual connection

A residually connected ground relay is widely used to protect medium-voltage systems. The actual ground current is measured by CTs that are interconnected in such a way that the ground relay responds to a current proportional to the ground-fault current. This scheme, using individual relays and CTs, is not often applied to low-voltage systems. However, low-voltage systems are available with three CTs built into them and connected residually with the solid-state trip devices to provide ground-fault protection.

The term *residual* in common usage is normally reserved for three-phase system connections and seldom applied to single-phase or multiple-signal mixing.

The basic residual scheme is shown in Figure 8-8. Each phase relay is connected in the output circuit of its respective CT, while a ground relay connected in the common or residual circuit measures the ground-fault current. In three-phase three-wire systems, no current flows in the residual leg under normal conditions because the resultant current of the three CTs is zero. This situation is true for phase-to-phase short circuits also. When a ground-fault occurs, the short-circuit current, returning through earth, bypasses the phase conductors and their CTs, and the resultant current flows in the residual leg and operates its relay.

On four-wire circuits, a fourth CT should be connected in the neutral circuit as shown in the dashed portion of the current. The neutral conductor carries both 60 Hz single-phase load unbalance current as well as zero-sequence harmonic currents caused by the nonlinear inductance of single-phase loads, such as fluorescent lighting. Without the neutral-conductor CT, the current in that conductor would appear to the ground relay as ground-fault current, and the ground relay would have to be desensitized sufficiently to prevent opening under unbalanced load conditions.

The selectivity of residually connected relays is determined by the CT ratio and the relay pickup setting. The CT ratio must be high enough for normal load circuits. Also to be considered are the unbalanced primary currents in each phase, the sum of which may contain sufficient asymmetrical current to cause a trip during a motor start. For this reason, sensitive

Copyright © 2001 IEEE. All rights reserved.

Copyright The Institute of Electrical and Electronics Engineers, Inc.
Provided by IHS under license with IEEE
No reproduction or networking permitted without license from IHS
Not for Resale

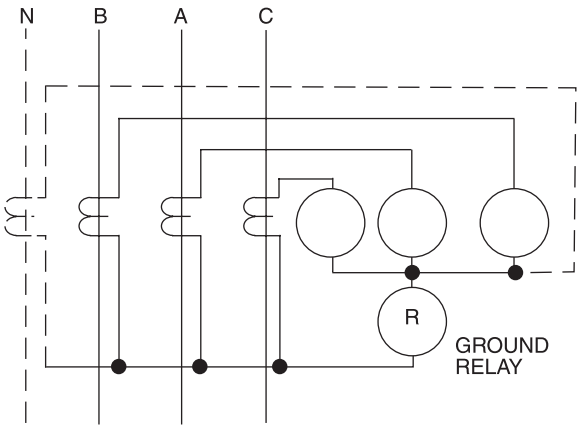

Figure 8-8—Residually connected ground relay

ground-fault protection schemes do not use instantaneous trips when a residually connected circuit is involved. If ground-fault protection with greater sensitivity is needed, the core-balance method should be considered (see 8.4.2).

8.4.2 Core balance

The core-balance method is based on primary current phasor addition or flux summation. The remaining zero-sequence component, if any, is then transformed to the secondary. The core-balance CT or sensor is the basis of several low-voltage ground-fault protective systems. (The core-balance CT is frequently called a zero-sequence sensor or window CT, but the term *core balance* is preferable because it more specifically describes the function of the CT.) The principle of the core-balance CT circuit is shown in Figure 8-9a. All load-carrying conductors pass through the same opening in the CT and are surrounded by the same magnetic core. Core-balance CTs are available in several convenient shapes and sizes, including rectangular designs for use over bus bars. This method can be more sensitive than the residual method because the sensor rating is large enough for the possible imbalance, not for the individual conductor load current.

Under normal conditions [i.e., balanced, unbalanced, or single-phase load currents or short circuits not involving ground (if all conductors are properly enclosed)], all current flows out and returns through the CT. The net flux produced in the CT core is zero, and no current flows in the ground relay. When a ground fault occurs, the ground-fault current returns through the equipment grounding circuit conductor (and possibly other ground paths) and bypasses the CT. The flux produced in the CT core is proportional to the ground-fault current, and a proportional current flows from the CT secondary to the relay circuit. Relays connected to core-balance CTs can be made quite sensitive. However, care is necessary to prevent false opening from unbalanced inrush currents that may saturate the CT core or through faults not

Copyright © 2001 IEEE. All rights reserved.

Copyright The Institute of Electrical and Electronics Engineers, Inc.
Provided by IHS under license with IEEE
No reproduction or networking permitted without license from IHS
Not for Resale

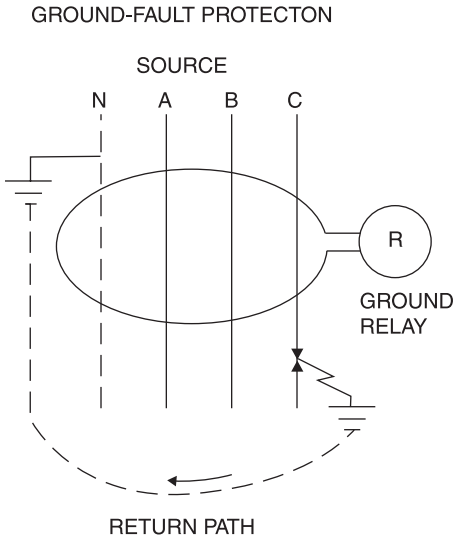

Figure 8-9a—Core-balance CT encircling all phase and neutral conductors

involving ground. If only phase conductors are enclosed and neutral current is not zero, the transformed current is proportional to the load zero-sequence or neutral current. Systems with grounded conductors, such as cable shielding, should have the CT surround only the phase and neutral conductors, if applicable, and not the grounded conductor.

By properly matching the CT and relay, ground-fault detection can be made as sensitive as the application requires. The speed of the relay limits damage and may be adjustable (for current or time, or both) in order to obtain selectivity. Many ground protective systems now have solid-state relays specially designed to operate with core-balance CTs. The relays in turn open the circuit protective device. Power circuit breakers, MCCBs with shunt trips, or electrically operated fused switches can be used. The last category includes service protectors, which use circuit breaker contacts and mechanisms, but depend on current-limiting fuses to interrupt the high available short-circuit currents. Fused contactors and combination motor starters may be used where the device-interrupting capability equals or exceeds the available ground-fault current.

Figure 8-9b shows a typical termination of a medium-voltage shielded cable. After the cable is pulled up through the core-balance CT, the cable jacket is removed to expose the shielding tape or braid. Jumpering the shields together, the connection to the ground is made after this shield lead is brought back through the CT. This precaution would have been necessary only if the shield had been pulled through the CT.

Between multiple shield ground connections on a single conductor cable, a potential exists that drives a circulating current, often of such a magnitude as to require derating of the cable ampacity. When applying the core-balance CT, the effects of this circulating current should be subtracted from the measuring circuit.

Copyright © 2001 IEEE. All rights reserved.

Copyright The Institute of Electrical and Electronics Engineers, Inc.
Provided by IHS under license with IEEE
No reproduction or networking permitted without license from IHS
Not for Resale

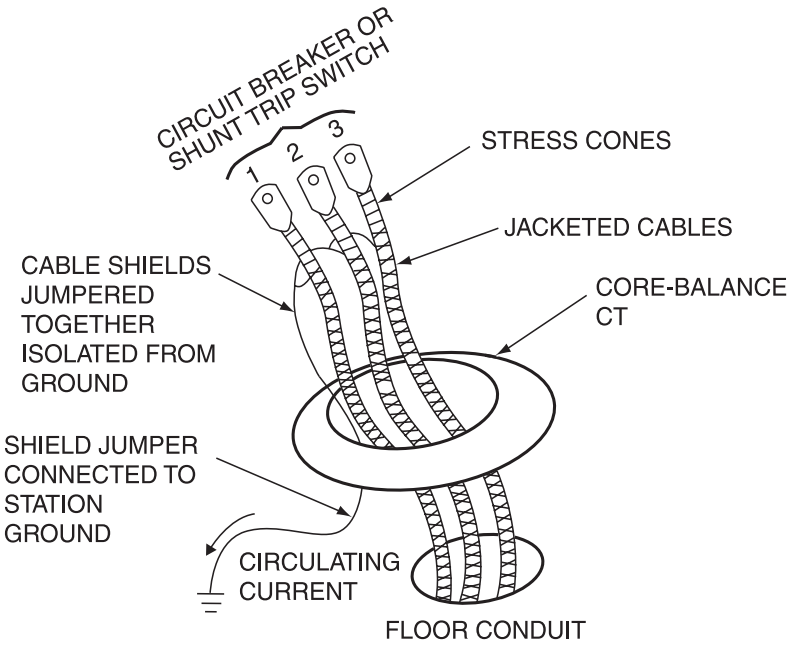

Figure 8-9b—Physical installation of a core-balanced CT for shielded cable termination

8.4.3 Ground return

Ground-return relaying is illustrated in Figure 8-10. The ground-fault current returns through the CT in the neutral-bus to ground-bus connection. For feeder circuits, an insulating segment may be introduced in busway or conduit, as shown in Figure 8-10, and a bonding jumper connected across the insulator to carry the ground-fault current. A CT enclosing this jumper then detects a ground fault. This method is not recommended for feeder circuits due to the likelihood of multiple ground-current return paths and the difficulty of maintaining an insulated joint.

8.4.4 Ground differential

A generic term, ground differential is used for a variety of schemes that utilize phasor or algebraic subtraction or addition of signals. The currents may be produced by any of the methods discussed in 8.4.1 through 8.4.3.

Figure 8-11a, for example, shows a ground differential protection for single-phase center-tapped loads and is similar to the residual method.

Copyright © 2001 IEEE. All rights reserved.

Copyright The Institute of Electrical and Electronics Engineers, Inc.
Provided by IHS under license with IEEE
No reproduction or networking permitted without license from IHS
Not for Resale

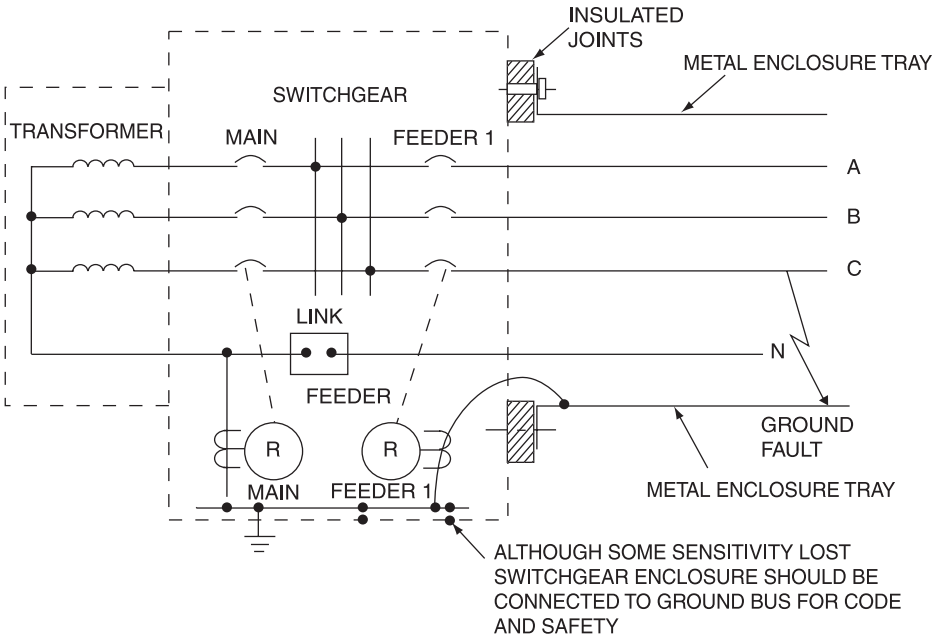

Figure 8-10—Ground-return relay scheme

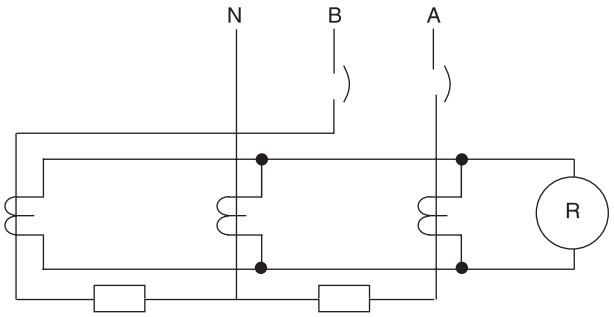

Figure 8-11a—Differential protection center-tapped loads

One core-balance sensor could detect ground faults in a plurality of loads (see Figure 8-11b).

Ground-differential relaying is effective for main bus protection because it has inherent selectivity. With the differential scheme (see Figure 8-11c), core-balance CTs are installed on each of the outgoing feeders and another lower ratio CT is placed in the transformer neutral

Copyright © 2001 IEEE. All rights reserved.

Copyright The Institute of Electrical and Electronics Engineers, Inc.
Provided by IHS under license with IEEE
No reproduction or networking permitted without license from IHS
Not for Resale

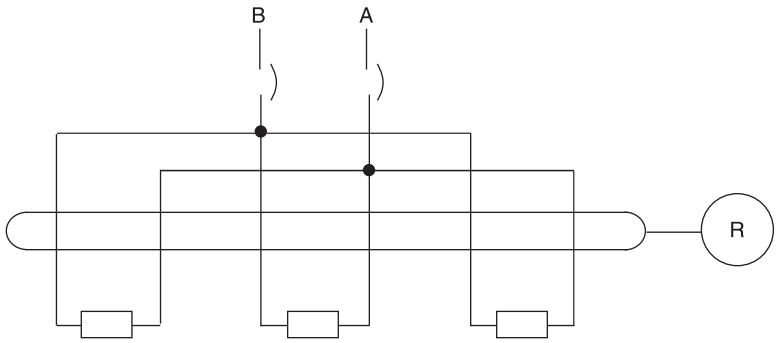

Figure 8-11b—Differential protection multiple loads

connection to ground. This arrangement can be made sensitive to low ground-fault currents without false opening for ground faults beyond the feeder CTs. All CTs should be carefully matched to prevent improper opening for high-magnitude faults occurring outside the differential zone.

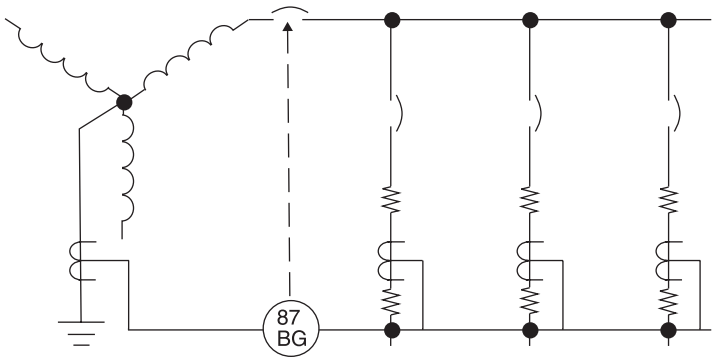

Figure 8-11c—Ground-differential scheme bus and transformer

Bus-differential protection protects only the zone between CTs and does not provide backup protection for feeder faults.

8.4.5 Circuit sensitivity

Factors that affect the sensitivity of ground-fault sensing include the following:

a) Circuit-charging current drawn by surge arrestors, shielded cables, and motor windings
b) The number of coordination steps between the branch circuit and the supply

Copyright © 2001 IEEE. All rights reserved.

Copyright The Institute of Electrical and Electronics Engineers, Inc.
Provided by IHS under license with IEEE
No reproduction or networking permitted without license from IHS
Not for Resale

c) Primary rating and accuracy of the largest CT used to supply residually connected relays in the coordination
d) How well the CTs used for residually connected relays are matched
e) Burden on the CTs, in particular the burden of the residually connected relay (Solid-state and some induction disk relays have burdens of 40 VA for a 0.1 A tap.)
f) Maximum through-fault current and its effect upon the CTs, with selected relays for phase and residual connections
g) Fault contact resistance
h) Location of conductors within core-balance transformers

8.5 Typical applications

The application of ground-fault protection to typical low-voltage power distribution systems is illustrated by the following figures:

System	Figure
Protection on mains only	8-12
Protection on mains and feeders	8-13
Protection on mains only, fused system	8-14
Ground-fault coordination	8-15a through 8-15d
Ground-fault system with alternate supply	8-16
Three-wire solid ground, single supply	8-17
Three-wire solid ground, dual supply	8-18
Three-wire solid ground, secondary selective	8-19
Three-wire high-resistance ground	8-20
Three-wire low-resistance ground	8-21
Four-wire solid ground, single supply	8-22
Four-wire solid ground, dual supply	8-23
Four-wire solid ground, secondary selective	8-24

These one-line diagrams show the locations for the ground-fault sensing devices as well as the locations for the protective devices. Additional considerations in the application of ground-fault protection are as follows:

a) A common economy in system design is to use the simple radial system without transformer secondary main overcurrent protective devices. This design results in a particular hazard when low-magnitude ground faults develop between the transformer secondary and the feeder overcurrent protective device.
b) Even with a secondary main overcurrent protective device, the zone from the transformer secondary to the main overcurrent protective device is not protected unless the

Copyright © 2001 IEEE. All rights reserved.

Copyright The Institute of Electrical and Electronics Engineers, Inc.
Provided by IHS under license with IEEE
No reproduction or networking permitted without license from IHS
Not for Resale

ground-fault sensing device detects the fault and trips both the secondary main and the transformer primary circuit protective device.

c) The use of sensitive ground-fault protection makes the coordination of protective devices extremely important. The first consideration is where to apply the ground-fault protection.

In considering the application of ground-fault protection, several alternatives exist, and each application varies in cost. This discussion considers two basic approaches:

— Ground-fault protection on the mains only
— Ground-fault protection on mains and feeders

8.5.1 Ground-fault protection on mains only

An example of ground-fault protection on mains only is shown in Figure 8-12. The 3000 A main has long-time and short-time trip devices, a 1200 A feeder with long-time and instantaneous trip devices, and an MCCB in a branch circuit with thermal and instantaneous trip devices. The ground-fault protection on the main coordinates with both instantaneous trip devices if given a time delay of about 0.2 s with a relatively flat characteristic.

The problem of where to set the minimum ground pickup arises. For full coordination with all feeders, the setting would have to be above 6000 A (above the instantaneous setting of the largest feeder). Obviously, this setting is too high and violates code requirements. For excellent protection of circuit ground faults, the pickup setting should be about 200 A. This setting, however, produces loss of coordination for ground faults at Point A of magnitude between 200 A and 1000 A and loss of coordination for faults at Point B of magnitude between 200 A and 6000 A. Thus, while the 200 A setting on the main provides excellent arcing fault protection, the main circuit breaker can be expected to trip for certain feeder faults where, before choosing this setting, such faults were handled by the feeder or branch circuit breakers. In short, a substantial degree of coordination would be lost. In a few applications, this loss of coordination can be tolerated.

Under the circumstances, the best setting is approximately a 1200 A minimum pickup. With such a setting, a system would have protection against the most severe arcing faults and would lose coordination only on ground-faults between 1200 A and 6000 A. The scheme described in this subclause is fairly common, but it is still clearly a compromise.

8.5.2 Ground-fault protection on mains and feeders

An example of ground-fault protection on mains and feeders is shown by Figure 8-13. In this situation, ground-fault protection is included on the 3000 A main and also on all feeders above roughly 400 A to 800 A. This application shows a 200 A minimum pickup with a time delay of 0.1 s on each feeder in addition to a 400 A minimum pickup and a 0.3 s time delay on the main. Ground-fault protection on the main only is clearly not recommended, as destructive faults can develop without detection.

Copyright © 2001 IEEE. All rights reserved.

--`,,`-`-`,,`,,`,`,,`---

Copyright The Institute of Electrical and Electronics Engineers, Inc.
Provided by IHS under license with IEEE
No reproduction or networking permitted without license from IHS Not for Resale

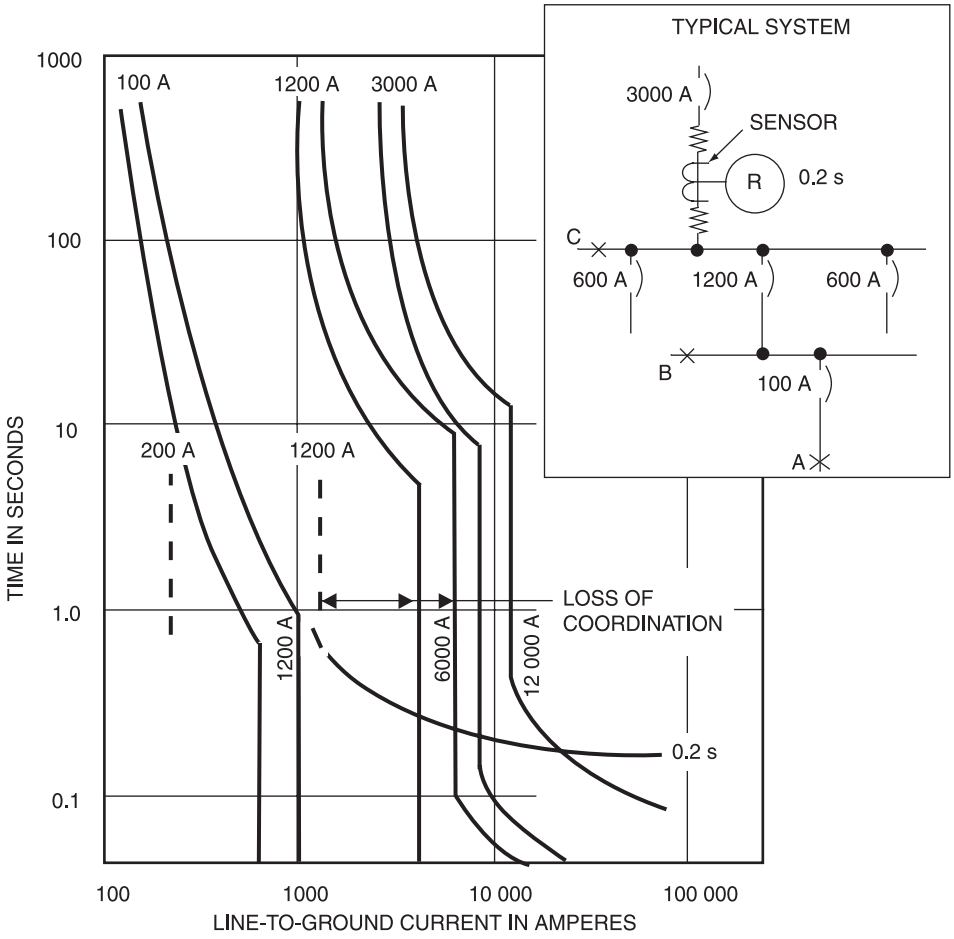

Figure 8-12—Ground relays on main circuit only

In this example, the main circuit breaker is fully coordinated with each feeder circuit breaker. Also, both main and feeders have sufficiently low settings to provide reasonable arcing fault protection. Coordination is lost between the feeder and branch devices for ground faults at Point A between 200 A and 1000 A and for all faults greater than 4000 A. Better protection can be obtained using zone selective interlocking (ZSI), with less damage occurring because of instantaneous tripping in the faulted zone.

8.5.3 Ground-fault protection on mains only in fused systems

Figure 8-14 shows a situation similar to the situation of Figure 8-12, involving a fused system with 1200 A ground pickup. This setting coordinates with the 200 A fuses and branch circuit lighting circuit breakers. However, coordination of the 1200 A pickup with the 800 A feeder fuses is sacrificed from magnitudes of 1200 A through 8000 A.

Copyright © 2001 IEEE. All rights reserved.

--`,,`-`-`,,`,,`,`,,`---
Copyright The Institute of Electrical and Electronics Engineers, Inc.
Provided by IHS under license with IEEE
No reproduction or networking permitted without license from IHS
Not for Resale

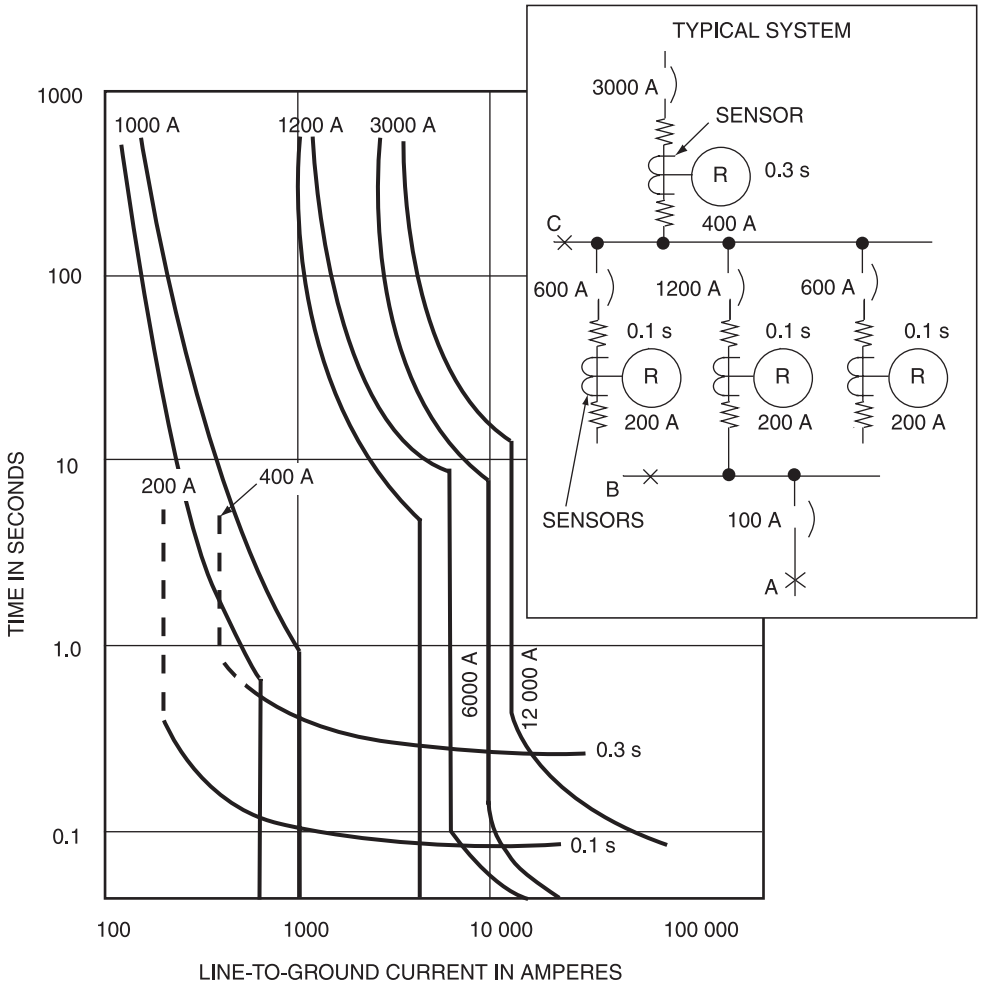

Figure 8-13—Ground relays on both main and feeder circuits

8.5.4 Ground-fault coordination

A variety of means exist for coordinating ground-fault protection.

8.5.4.1 Zone selective interlocking (ZSI)

One approach to ground-fault coordination is ZSI, which not only allows operation at the minimum desirable time for units in every zone when they are responding to ground faults in their own zone, but also establishes positive coordination between mains, feeders, and branches so that the smallest possible segment of the system is opened in the event of a ground fault.

Copyright © 2001 IEEE. All rights reserved.

--`,,`-`-`,,`,,`,`,,`---
Copyright The Institute of Electrical and Electronics Engineers, Inc.
Provided by IHS under license with IEEE
No reproduction or networking permitted without license from IHS
Not for Resale

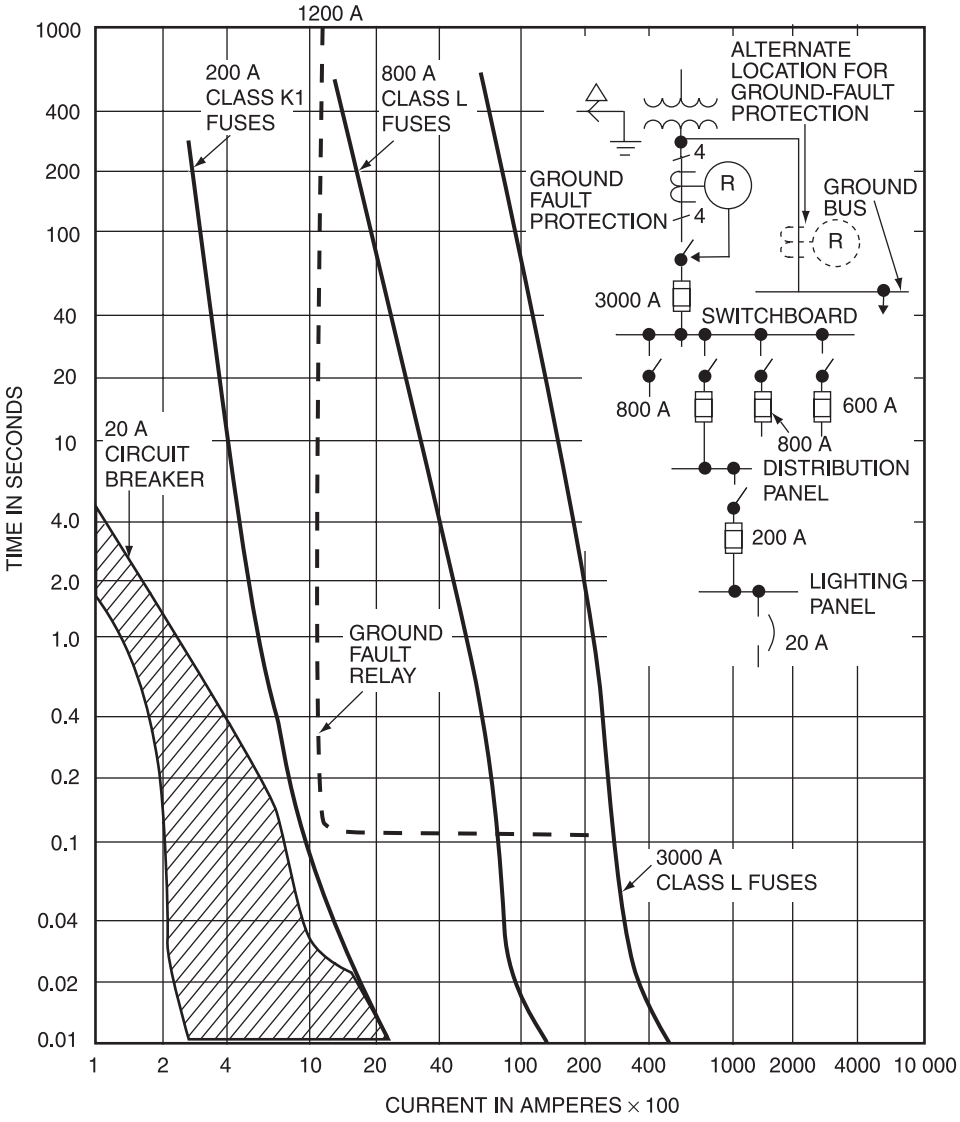

Figure 8-14—Fused system using ground-fault relays on main circuit only, showing coordination with 200 A fuses and lack of coordination with 800 A feeder fuses

Figure 8-15a shows a typical coordination arrangement. Relay 3 restrains in a time-delay mode Relay 2, which in turn restrains Relay 1. For example, with a fault of 1500 A at Location 3, Relay 3 initiates a signal in 0.03 s, the minimum delay, to the branch device to open the circuit. At the time of the fault, Relay 3 also sends a restraining signal to Relay 2,

Copyright © 2001 IEEE. All rights reserved.

Copyright The Institute of Electrical and Electronics Engineers, Inc.
Provided by IHS under license with IEEE
No reproduction or networking permitted without license from IHS
Not for Resale

which in turns sends a restraining signal to Relay 1. As a result, these two relays start timing the duration of the fault. Relay 2 initiates a signal to the feeder device only if the branch device fails to open the circuit 0.2 s after the ground fault occurred. Relay 1 initiates a signal to the main device only if the branch device and feeder device fail to open the circuit 0.5 s after the ground fault occurred. If a 1500 A ground fault occurs at Location 2, Relay 2 initiates a signal in 0.03 s to the feeder device to open the circuit. At the time of the fault, Relay 2 also sends a restraining signal to Relay 1. Relay 1 initiates a signal to the main device only if the feeder device fails to open the circuit 0.5 s after the ground fault occurred. If a 1500 A ground fault occurs at Location 1, Relay 1 initiates a signal in 0.03 s to the main device to open the circuit. This type of system coordination allows the circuit-interrupting devices nearest to the ground fault to receive an operation signal instantaneously (i.e., 0.03 s) and provide time delay in only the backup devices. Clearing time of the circuit-interrupting device should also be considered in complete system coordination. Where MCCBs and insulated-case circuit breakers (ICCBs) are utilized, the time-current curves should include their instantaneous overrides. These overrides operate at higher levels of fault current and may create zones of nonselective coordination.

This system requires at least a pair of control wires between relays of each successive coordination step. The control leads add exposure to possible faults on these control leads. This exposure should be considered when ZSI schemes are applied.

8.5.4.2 Coordinations of ground-fault protection schemes

Another approach to a coordinated ground-fault protection scheme is based upon protection against low-level arcing faults in which the arc has seriously reduced the fault current. Backup protection utilizes a standard time-overcurrent relay. This scheme is illustrated by Curve B1 and Curve B2 in Figure 8-15b and Figure 8-15c, where the low level protection scope is compared against two common ground-fault protection schemes.

Curve C1 and Curve C2 represent the tripping characteristics of a fixed-delay solid-state ground-fault relay. Curve A1 and Curve A2 represent a special electromechanical ground-fault relay. Both types are set with a minimum pickup of 1200 A. Curve B1 and Curve B2 represent the tripping characteristics of a standard electromechanical overcurrent relay with very inverse tripping characteristics, but set to operate on a minimum pickup of 72 A. Scheme A and Scheme C relays are not sensitive to low ground-fault currents, do not initiate nuisance trips, but back up phase-overcurrent protection in the range of 1000 A to 20 000 A. However, they may not necessarily provide real protection service.

Numerous groups have studied the arcing nature of 480 V ground faults. Often a 90 V to 140 V arc has been measured: such an arc limits the ground-fault current magnitude. Some articles have equated arcing fault damage to 1800 kW cycle, 2000 kW cycle, or even 10 000 kW cycle energy limits.

The 1800 kW cycle and 10 000 kW cycle curves shown in Figure 8-15b and Figure 8-15c are based upon a 100 V arc and an arcing current of essentially resistive characteristics.

 Copyright © 2001 IEEE. All rights reserved.

Copyright The Institute of Electrical and Electronics Engineers, Inc.
Provided by IHS under license with IEEE
No reproduction or networking permitted without license from IHS Not for Resale

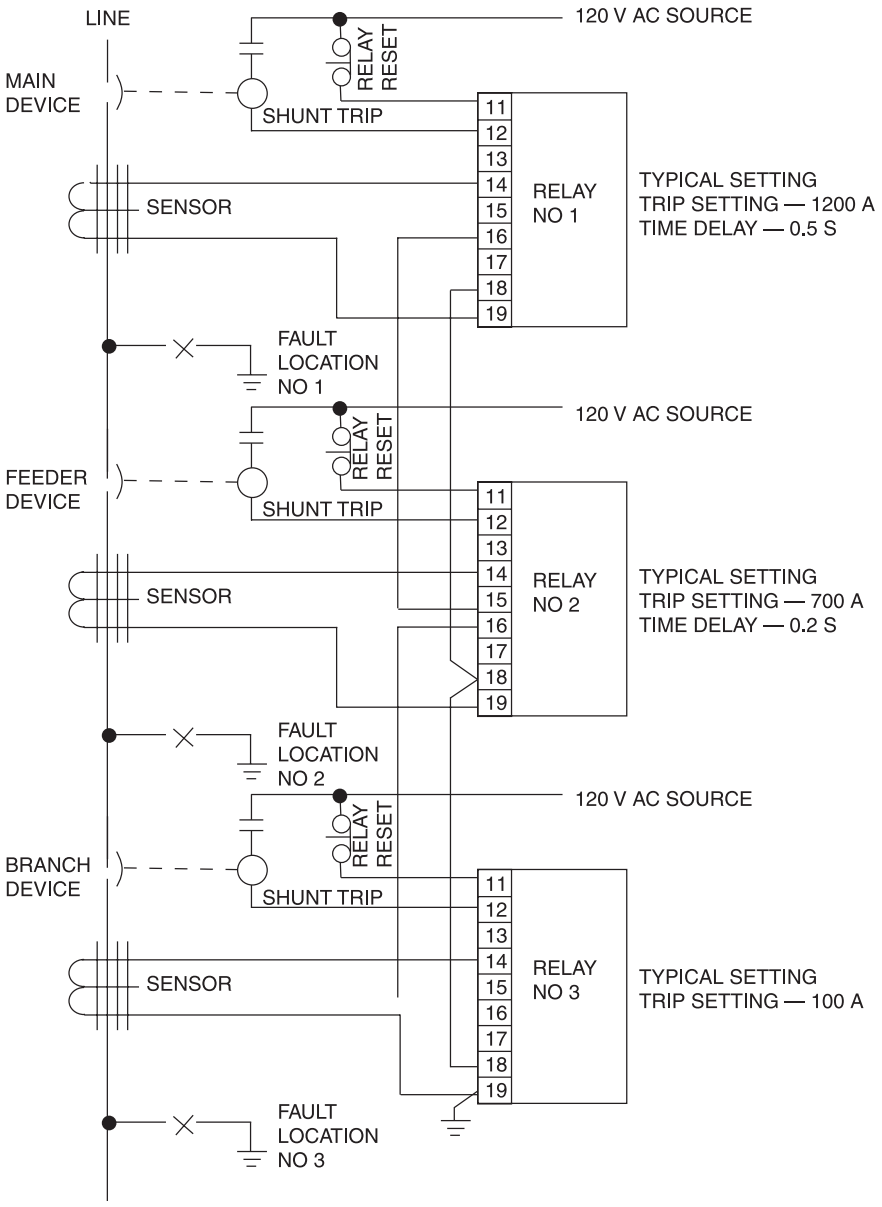

NOTE: FOR CLARITY, ALL POWER SUPPLY AND TOTAL CIRCUIT CONNECTIONS ARE NOT SHOWN.

Figure 8-15a—Typical zone selective intelocking (ZSI) system

Copyright © 2001 IEEE. All rights reserved.

Copyright The Institute of Electrical and Electronics Engineers, Inc.
Provided by IHS under license with IEEE
No reproduction or networking permitted without license from IHS
Not for Resale

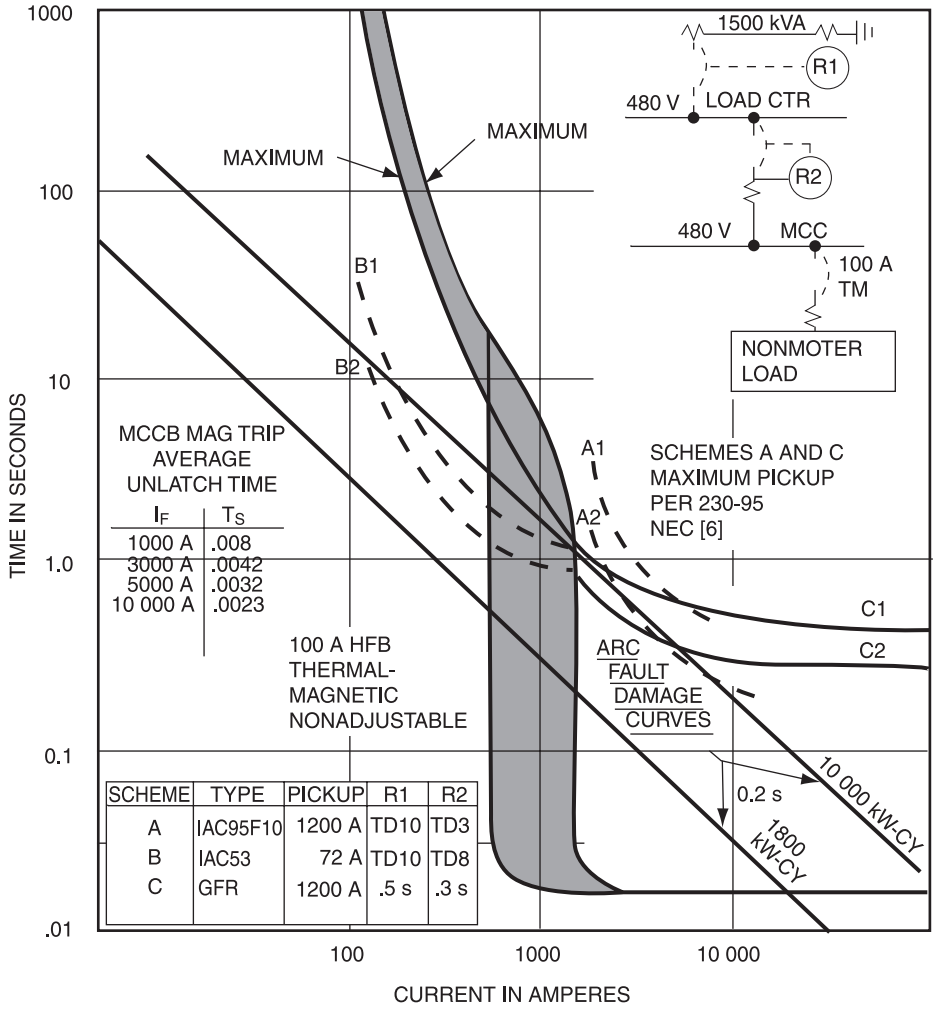

Figure 8-15b—Minimum ground-fault protection for a nonmotor circuit

Fault energy = $V_{\text{arc}} \times I_F \times \text{time}$

Fault energy = $\dfrac{100(I_F)}{1000}\ 60t$ kW cycles

where

V_{arc} is 100 arc (V),
t is time (s),
I_F is ground-fault current.

Copyright © 2001 IEEE. All rights reserved.

--`,,`-`-`,,`,,`,`,,`---

Copyright The Institute of Electrical and Electronics Engineers, Inc.
Provided by IHS under license with IEEE
No reproduction or networking permitted without license from IHS
Not for Resale

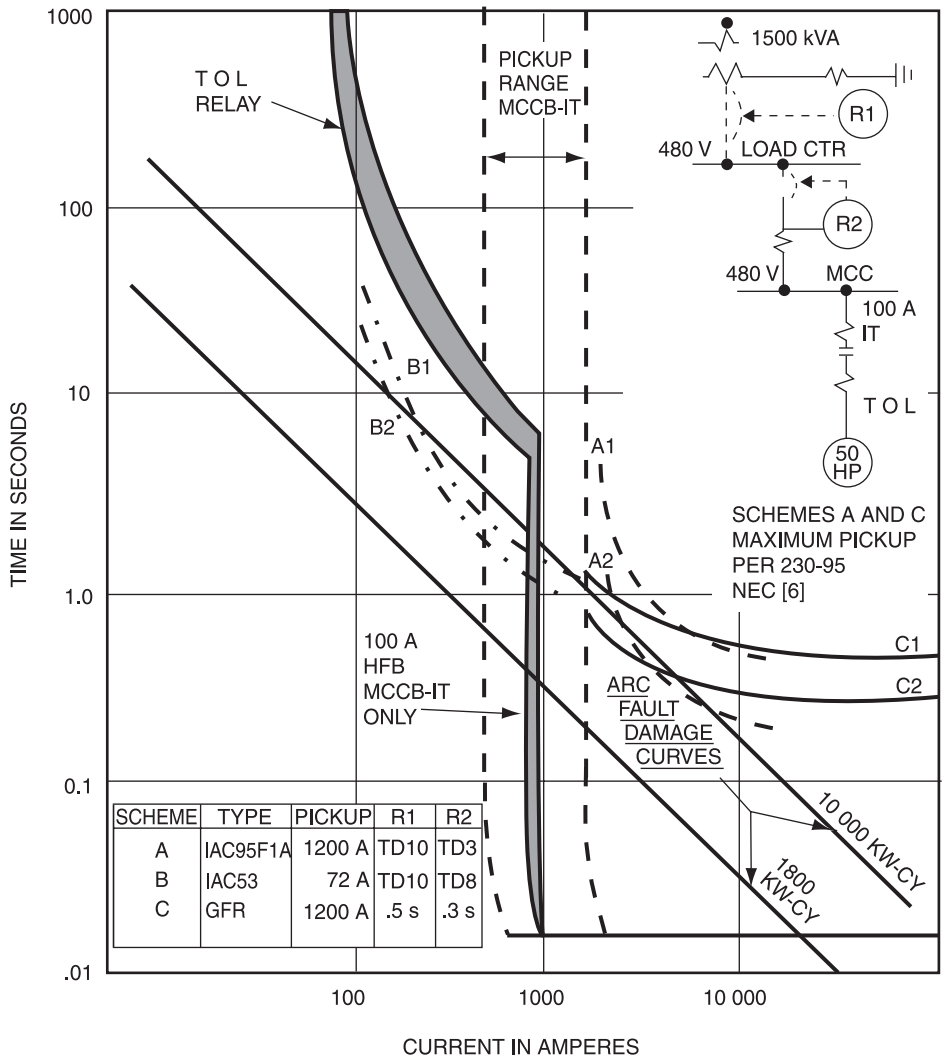

Figure 8-15c—Minimum ground-fault protection for a motor circuit

If fault energy = 1800 kW cycles = 6 ($I_F \times t$) kW cycles, then

$$I_F \times t = \frac{1800}{6} = 300$$

Copyright © 2001 IEEE. All rights reserved.

Copyright The Institute of Electrical and Electronics Engineers, Inc.
Provided by IHS under license with IEEE
No reproduction or networking permitted without license from IHS
Not for Resale

Example

I_F = 100 A, t = 3 s
I_F = 1000 A, t = 0.3 s
I_F = 10 000 A, t = 0.03 s

Plotted on a log-log scale, the locus of the boundary points is a straight line, which makes an ideal criteria for coordinating with a very inverse or extremely inverse ground-fault relay. The calculations for the 10 000 kW cycle damage limit were developed on the same basis.

Referring again to Figure 8-15b and Figure 8-15c, it can be seen that Scheme A and Scheme C permit low (<1000 A) ground-fault currents, whereas Scheme B limits the damage for arcing ground faults in both the motor and the nonmotor circuit. However, Scheme B loses coordination below 1000 A unless a ground-fault relay is on the MCC branch circuits above 30 A and on motor branch circuits above 11 kW, as illustrated in Figure 8-15d.

8.5.5 Ground-fault protection of systems with an alternate power source

Following usual considerations of reliability or redundancy, it may be advantageous to ground the neutral terminal of an alternate power source, such as a second utility source (or service) or an engine-generator set, at its location. However, this configuration may create multiple neutral-to-ground connections, which in turn may cause problems unless appropriate steps are taken.

For example, consider a typical three-phase, four-wire 480 V emergency power system in which a three-pole transfer switch connects the load to either a normal utility source or an engine-generator set. Ground-fault protection is provided at the utility incoming service. The neutral conductors of both the utility incoming service and the engine-generator set are separately grounded and interconnected (i.e., continuous neutral).

Because of the multiple neutral-to-ground connections, two problems can develop. First, when a ground fault occurs anywhere in the system, the fault current has two paths of flow: one directly to the grounded neutral of the utility incoming service via equipment-grounding conductors and one to the grounded neutral of the engine-generator set via equipment-grounding conductors. In both cases, the current would then return to the neutral of the utility incoming service via the continuous neutral. Current following the latter path is seen as neutral current, and it reduces or eliminates the magnitude of the ground-fault current sensed by a relay.

Second, when the load is unbalanced, the return neutral current has two paths of flow: one directly to the service neutral via the neutral conductor and one back to the service neutral via the equipment-grounding conductors at both the utility incoming service and the engine-generator set and through the continuous neutral. The current through the latter path would have the same effect on the ground-fault sensor as a ground-fault current and is carried by equipment-grounding conductors, which are not provided for this purpose. If the second path has sufficiently low impedance (i.e., comparable to the impedance of the neutral path), an

 Copyright © 2001 IEEE. All rights reserved.

Copyright The Institute of Electrical and Electronics Engineers, Inc.
Provided by IHS under license with IEEE
No reproduction or networking permitted without license from IHS Not for Resale

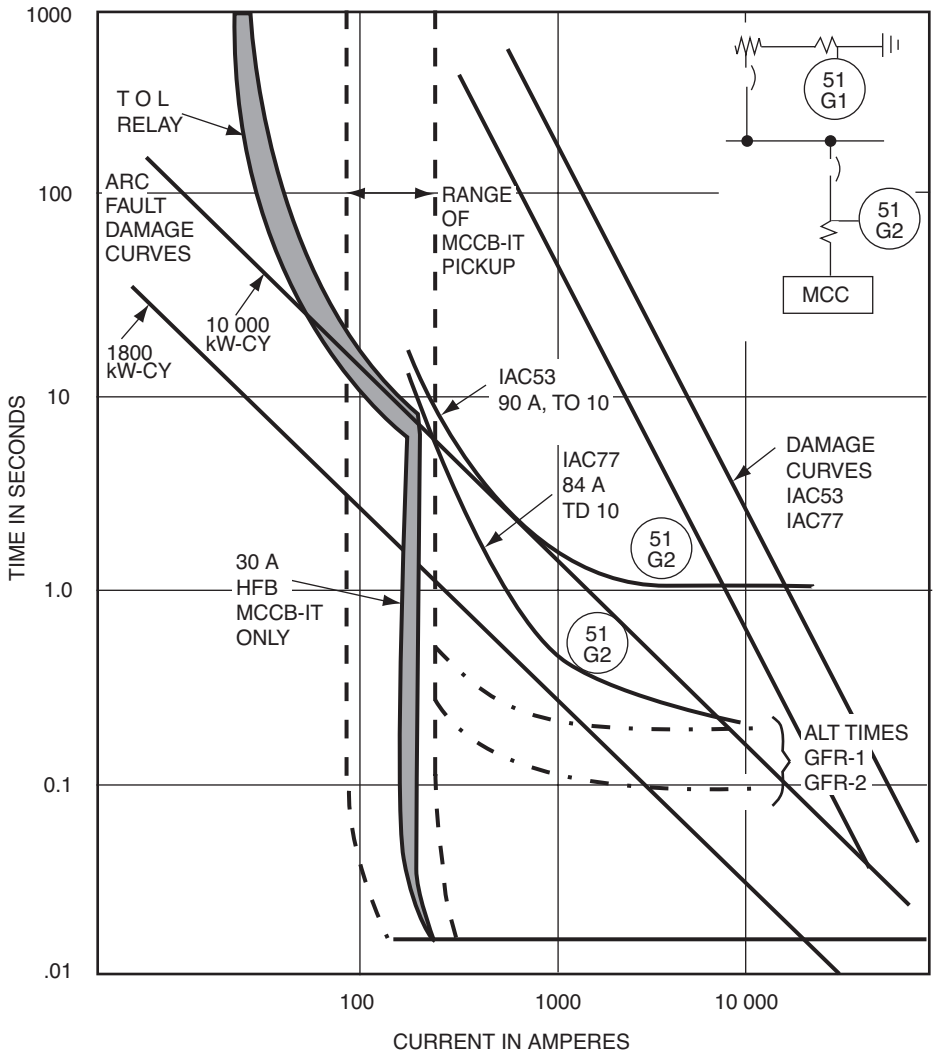

Figure 8-15d—Ground-fault protection for an 11 kW motor load

unbalanced load may cause the ground-fault sensor to trip the breaker even though a ground fault or short circuit does not occur.

Various solutions include single-point grounding, four-pole transfer switches, overlapping neutral contacts, and transformer isolation. In all cases, consideration should be given to both modes of transfer switch operation, to providing adequate area protection and ground-fault protection, and to conformance to the NEC.

a) Single-point grounding eliminates the problems identified in this subclause and permits simple relaying methods. The basic scheme is shown in Figure 8-24 and can be used for multiple services or in utility service-generator source systems with a continuous neutral.

Copyright © 2001 IEEE. All rights reserved.

Copyright The Institute of Electrical and Electronics Engineers, Inc.
Provided by IHS under license with IEEE
No reproduction or networking permitted without license from IHS
Not for Resale

The method can be modified to detect not only phase-to-ground (e.g., enclosure) faults (i.e., the most commonly occurring), but also phase-to-neutral failures in a system. However, consideration should be given to the possibility of power disruption within the facility and transferring the load to ungrounded emergency power source. Also, a ground-fault condition when the transfer switch is in the emergency position may cause nuisance tripping of the normal source breaker.

b) Using four-pole transfer switches throughout the system may allow complete isolation of service and generator neutral conductors. This setup eliminates possible improper ground-fault sensing and nuisance tripping caused by multiple neutral-to-ground connections. When this configuration is set up, the generator complies with the NEC definition of a separately derived system. However, momentary opening of the neutral conductor may cause voltage surges. Furthermore, the contacts of the fourth switch pole interrupt current and are, therefore, subject to arcing and contact erosion. A good maintenance program should reaffirm at intervals the integrity of the fourth pole as a current-carrying member with sufficiently low impedance.

c) A variation of the method of isolating the normal and emergency source neutrals is for the automatic transfer switch to include overlapping neutral transfer contacts. This setup provides the necessary isolation between neutrals and at the same time minimizes abnormal switching voltages. With overlapping contacts, the only time the neutrals of the normal and emergency power sources are connected is during transfer and retransfer. With a conventional double-throw transfer switch, this duration can be less than the operating time of the ground-fault sensor, which is usually set anywhere from 6 cycles to 24 cycles (100–400 ms). As with four-pole transfer switches, conventional ground-fault sensing can be readily added to the emergency side. Figure 8-16 shows isolation by overlapping contacts and ground-fault sensing on the emergency side for actuating an alarm circuit rather than tripping a breaker. If required, emergency source tripping on ground faults can also be provided.

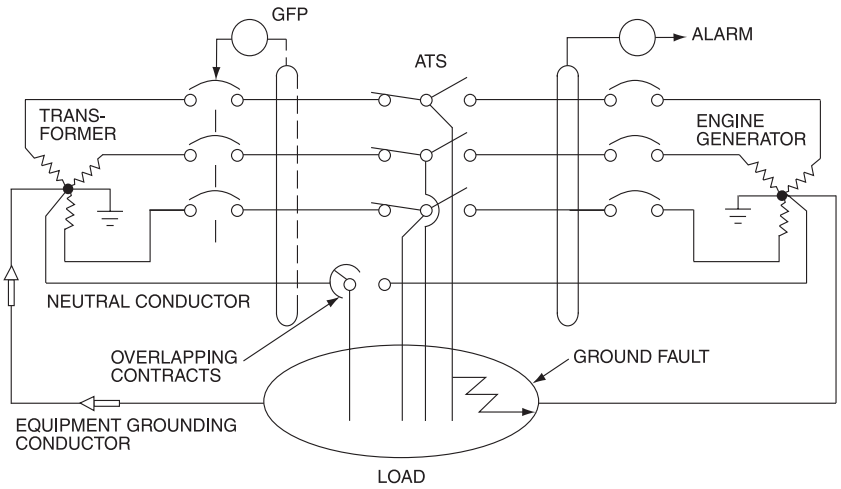

Figure 8-16—Emergency power systems with ground-fault protection on normal and ground-fault alarm on emergency

Copyright © 2001 IEEE. All rights reserved.

Copyright The Institute of Electrical and Electronics Engineers, Inc.
Provided by IHS under license with IEEE
No reproduction or networking permitted without license from IHS
Not for Resale

d) Where a three-phase, four-wire critical load is relatively small compared to the rest of the load, an isolating transformer is sometimes used. This setup requires both power sources connected to the transfer switch to be three-phase and three-wire, and the delta-wye isolating transformer to be inserted between the transfer switch and the four-wire load. An unbalance of the critical load would have no effect on the ground-fault protector at the incoming service. Furthermore, ground-fault currents would not be transmitted through the delta-wye transformer. Any increase in primary current due to ground-faults in the secondary is seen simply as an overload by the primary protective devices. Circuits on the secondary side of the isolating transformer have the advantage of reduced available fault current, but may require their own ground-fault protection if the transformer secondary is grounded. Because the transfer switch is not located directly ahead of the load, it does not guarantee emergency power supply in the event of isolating transformer failure.

8.5.6 Placement of ground fault sensors and relays

Figure 8-17 through Figure 8-24 illustrate the placement of ground fault sensors, relays, and alarms for selective protection of main, tie, feeder, and branch circuits systems with varied grounding arrangements. For increasingly selective systems, ground fault protective devices should be added as shown to the tie, feeder, and, finally, branch circuits.

Copyright © 2001 IEEE. All rights reserved.

Copyright The Institute of Electrical and Electronics Engineers, Inc.
Provided by IHS under license with IEEE
No reproduction or networking permitted without license from IHS
Not for Resale

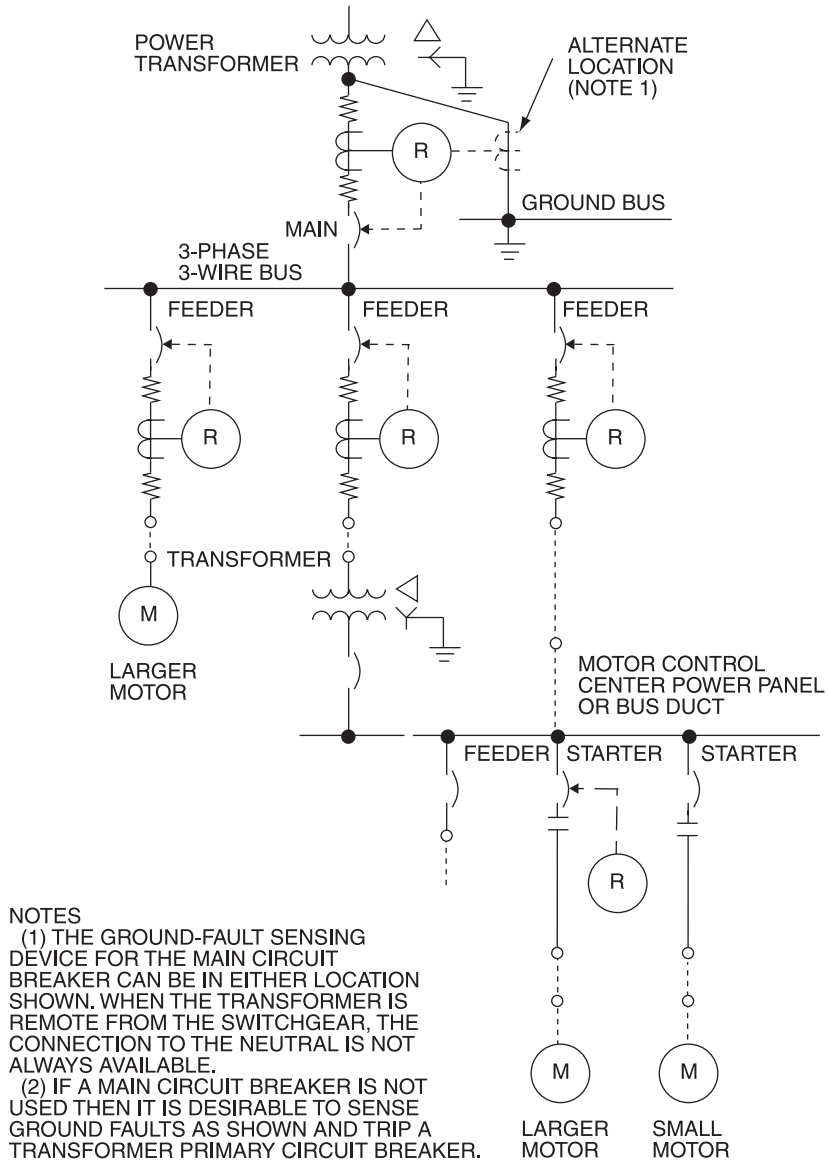

NOTE—Ground relays should have time coordination.

Figure 8-17—Three-wire solidly grounded system with single supply

Copyright © 2001 IEEE. All rights reserved.

Copyright The Institute of Electrical and Electronics Engineers, Inc.
Provided by IHS under license with IEEE
No reproduction or networking permitted without license from IHS
Not for Resale

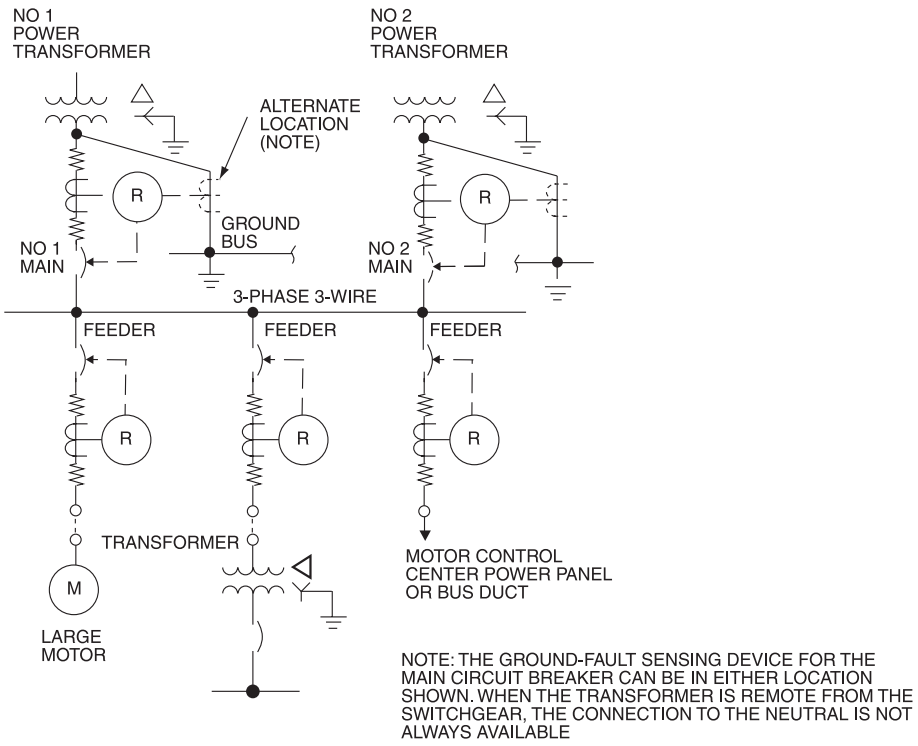

NOTE—Ground relays should have time coordination.

Figure 8-18—Three-wire solidly grounded system with dual supply

8.6 Special applications

8.6.1 Ground-fault identification and location

Ground faults in solidly grounded systems usually require the opening of disconnect devices to reduce damage. Many relays and trip devices have targets or lamp indicators to identify faulty circuits. The equipment and conductors should be inspected and repaired, if necessary, prior to restoration of service.

The conventional method of ground-fault detection used on ungrounded wye or delta three-wire systems utilizes three potential transformers supplying ground detector lamps, ground-detecting voltmeters, or ground alarm relays. The presence of potential transformers connected to ground from each phase may in itself be the cause of dangerous overvoltages because the detector becomes the grounding mechanism, as well as being a detector.

Copyright © 2001 IEEE. All rights reserved.

Copyright The Institute of Electrical and Electronics Engineers, Inc.
Provided by IHS under license with IEEE
No reproduction or networking permitted without license from IHS
Not for Resale

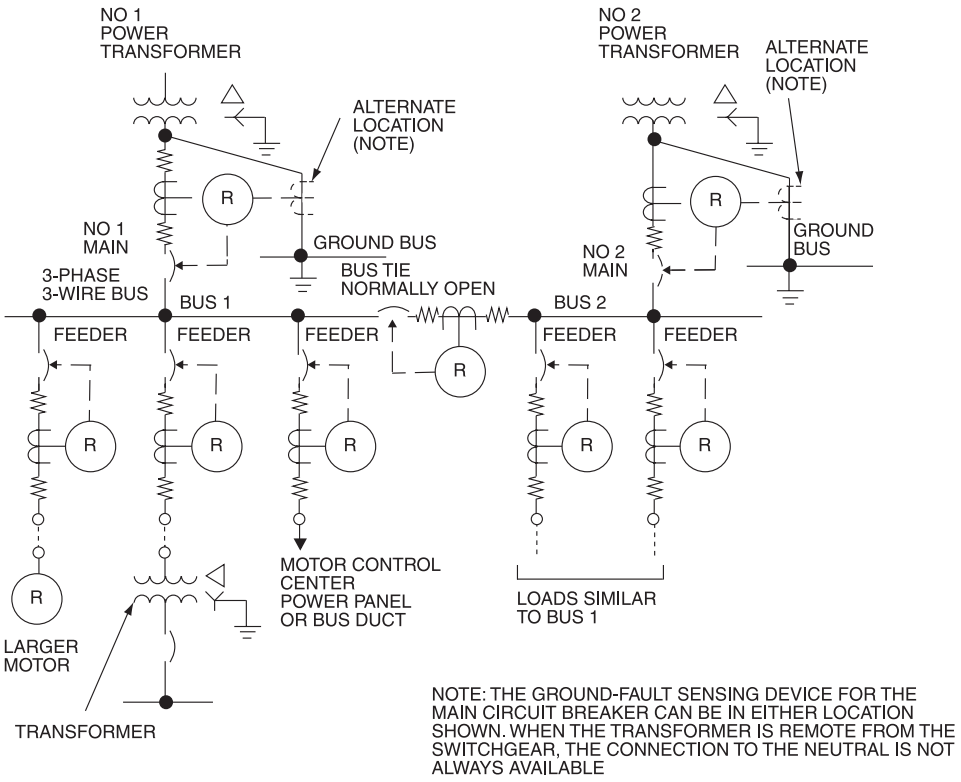

NOTE—Ground relays should have time coordination.

Figure 8-19—Three-wire solidly grounded secondary selective system

To reduce the probability of transient overvoltages, high-resistance grounding is often applied, as described in detail in IEEE Std 142-1991. The basic reason to use high-resistance grounding is to eliminate an opening operation when the first ground fault occurs. Operation with a ground fault on the system entails a substantial hazard, and locating the fault as soon as system operation allows becomes important, especially before a second ground fault develops on a second phase and creates a line-to-line-to-ground fault.

In applying high-resistance grounding, the resistance of the ground circuit should be of a magnitude to pass a ground current at least equal to the charging current of the system. Figure 8-25 shows a typical high-resistance-grounded system with a neutral resistor and a ground alarm relay. Most similar applications use a distribution transformer with a low-voltage resistor connected to its 240 V secondary.

Each feeder is equipped with a low-ratio core-balance transformer and ammeter or milliamp meter, which will indicate the faulted feeder. No automatic opening occurs with this scheme.

In lieu of CTs and ammeters on each feeder, a pulsing ground circuit may be used as shown in Figure 8-26. The pulsing circuit is manually initiated and serves to reduce the resistance to

Copyright © 2001 IEEE. All rights reserved.

Copyright The Institute of Electrical and Electronics Engineers, Inc.
Provided by IHS under license with IEEE
No reproduction or networking permitted without license from IHS
Not for Resale

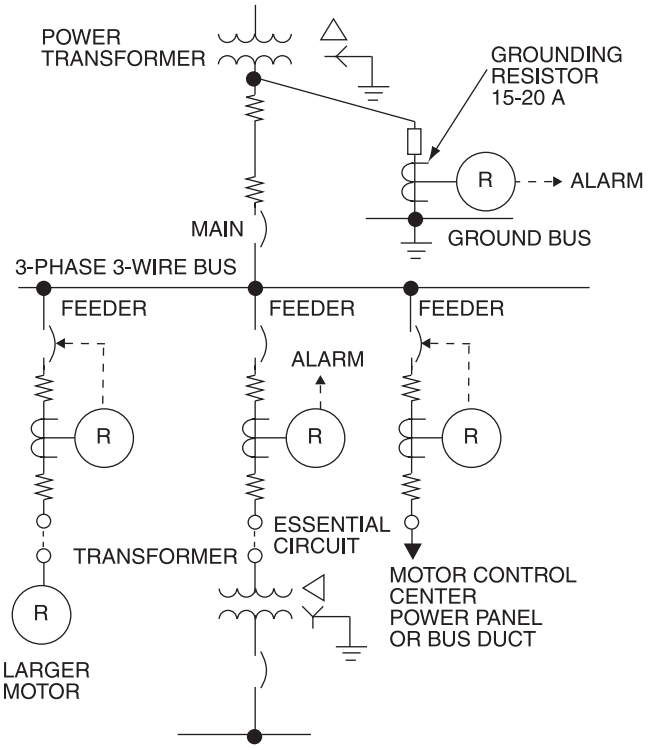

NOTE—Ground relays should have time coordination.

Figure 8-20—Three-wire high-resistance-grounded system

about 50% to 75% of its full value, about once or twice a second. This change causes the ground-fault current to vary sufficiently to be detected by a clamp-on ammeter, which can be placed in turn around the conductors of each feeder circuit.

If a ground fault is not cleared immediately, a relatively dangerous condition may arise upon the occurrence of a second fault. A second fault has a high probability of occurring because

— The steady-state voltage on the unfaulted phases has increased
— The initial fault may be intermittent and cause some transient overvoltages in spite of the resistor grounding

Figure 8-27 shows how feeder ground relays are applied to open on the occurrence of the second fault on a different feeder. The feeder ground relays are set to pick up at a value higher than the maximum initial ground-fault current. For example, on a 4.16 kV system, a 300 W resistor would limit the ground-fault current to 8 A. The ground alarm relay would be set to pick up at 5 A or less. The feeder ground relays are set to pick up at a current level higher than the level for a single line-to-ground fault, perhaps 10 A to 15 A.

Copyright © 2001 IEEE. All rights reserved.

Copyright The Institute of Electrical and Electronics Engineers, Inc.
Provided by IHS under license with IEEE
No reproduction or networking permitted without license from IHS
Not for Resale

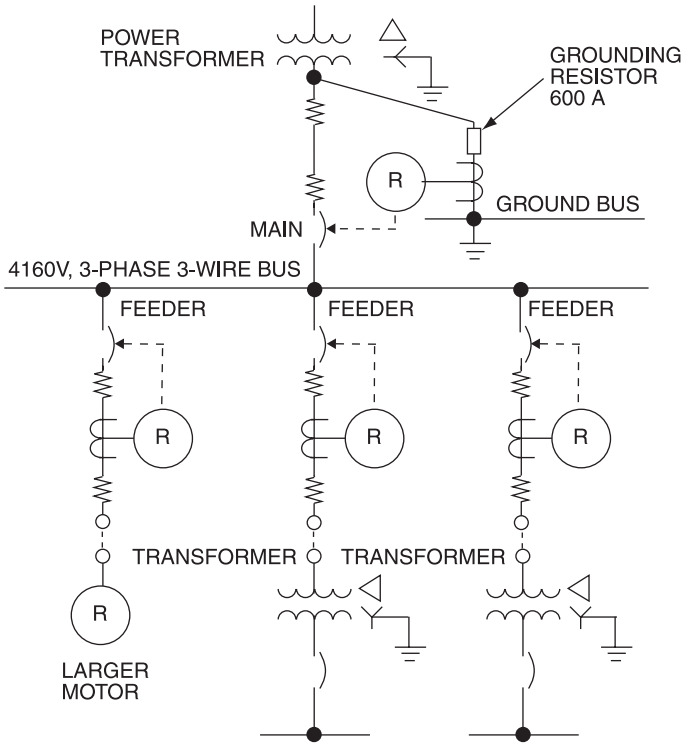

NOTE—Ground relays should have time coordination.

Figure 8-21—Three-wire low-resistance-grounded system

The use of low-voltage grounding resistors coupled with grounding (or standard distribution) transformers is preferred by some engineers. Figure 8-28 shows how these transformers are utilized for three-wire grounded wye systems and for three-wire grounded delta systems.

8.6.2 Spot network applications

Spot networks provide continuity of service against the loss of one or more of several utility supply feeders. Each feeder supplies one network transformer at each vault. All transformer secondaries at each vault are paralleled at the network service bus from which the user service switchgear is connected.

Figure 8-29 shows one method of providing ground-fault protection for a three-transformer spot network serving three physically separate service switchboards. Ground protection is provided on each switchboard feeder, in each switchboard main, and in the vault system neutral, which trips out all network protectors in the event of a vault fault. However, not all utilities allow user relays to trip network protectors. In a typical approved installation, the

Copyright © 2001 IEEE. All rights reserved.

Copyright The Institute of Electrical and Electronics Engineers, Inc.
Provided by IHS under license with IEEE
No reproduction or networking permitted without license from IHS
Not for Resale

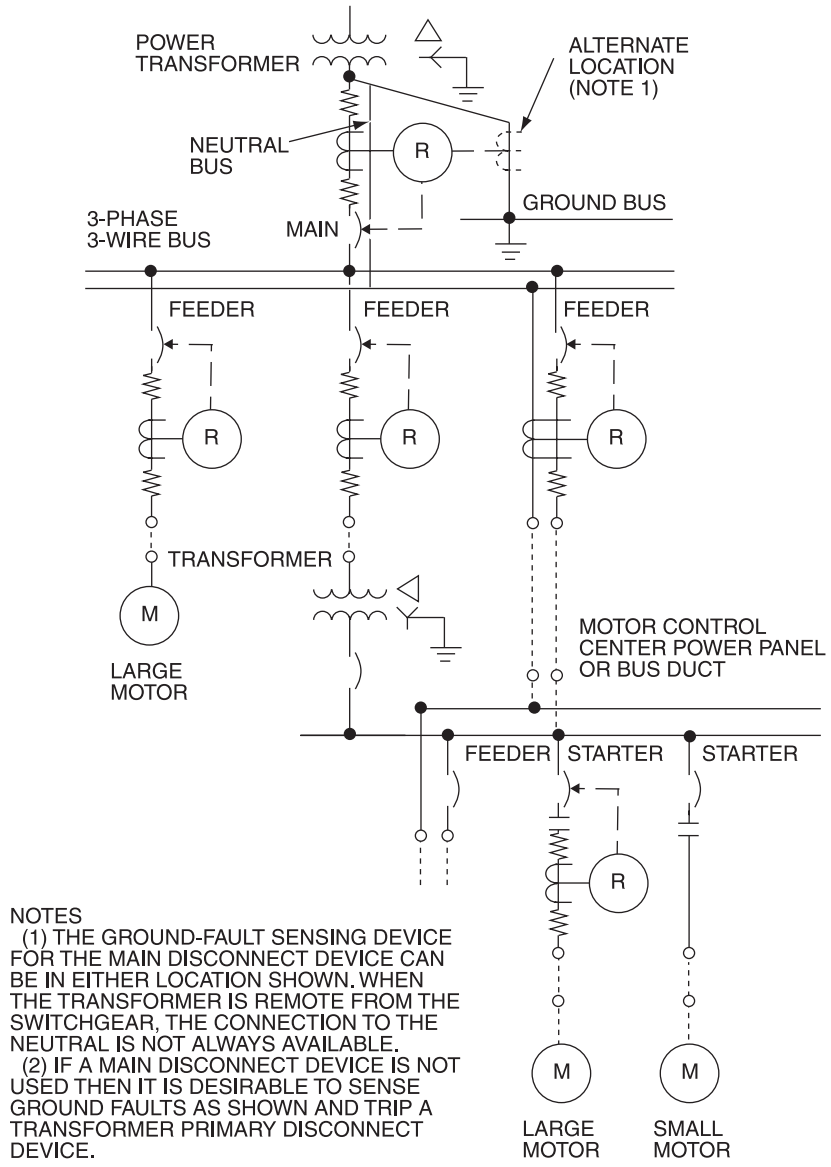

NOTE—Ground relays should have time coordination.

Figure 8-22—Four-wire solidly grounded system with single supply

feeder ground relays are set at about 0.1 s, the main relays at about 0.3 s, and the vault relays at about 0.5 s. The minimum operating current settings for the vault relays are set substantially higher than the setting on the user switchgear so that the vault relays operate only for a fault in the vault area. Although not shown in the figure, each service switchboard should include a connection from neutral bus to ground bus.

Copyright © 2001 IEEE. All rights reserved.

Copyright The Institute of Electrical and Electronics Engineers, Inc.
Provided by IHS under license with IEEE
No reproduction or networking permitted without license from IHS
Not for Resale

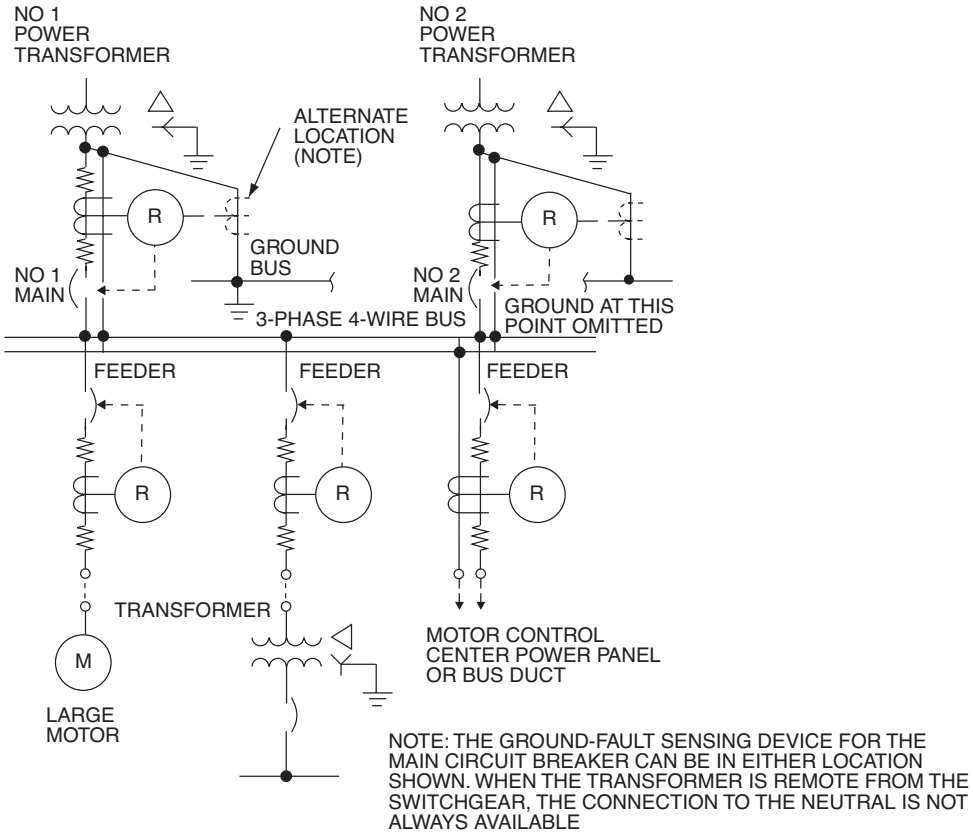

NOTE—Ground relays should have time coordination.

Figure 8-23—Four-wire solidly grounded system with dual supply

Where providing secondary selective flexibility in the user service switchgear is desired, the system sometimes takes the form shown in Figure 8-30. The ground sensors (i.e., CTs) should be carefully applied in the main circuits. If the ground sensors are installed over all phases and neutral, then a fault on either user bus always causes tripping of both main circuit breakers. One method of circumventing this problem is to install the main sensors over the phases only. This setup provides the proper selectivity, except that the ground-relay minimum operating-current setting should be set at a value above the normal neutral current. This normal neutral current consists of the single phase-to-neutral load unbalance plus the third harmonic in the neutral caused by nonincandescent lighting systems. Settings of 1000 A to 2000 A may be required. With this type of system, meeting the present 1200 A maximum setting of the NEC while still accommodating the secondary selective arrangement is difficult.

Copyright © 2001 IEEE. All rights reserved.

Copyright The Institute of Electrical and Electronics Engineers, Inc.
Provided by IHS under license with IEEE
No reproduction or networking permitted without license from IHS
Not for Resale

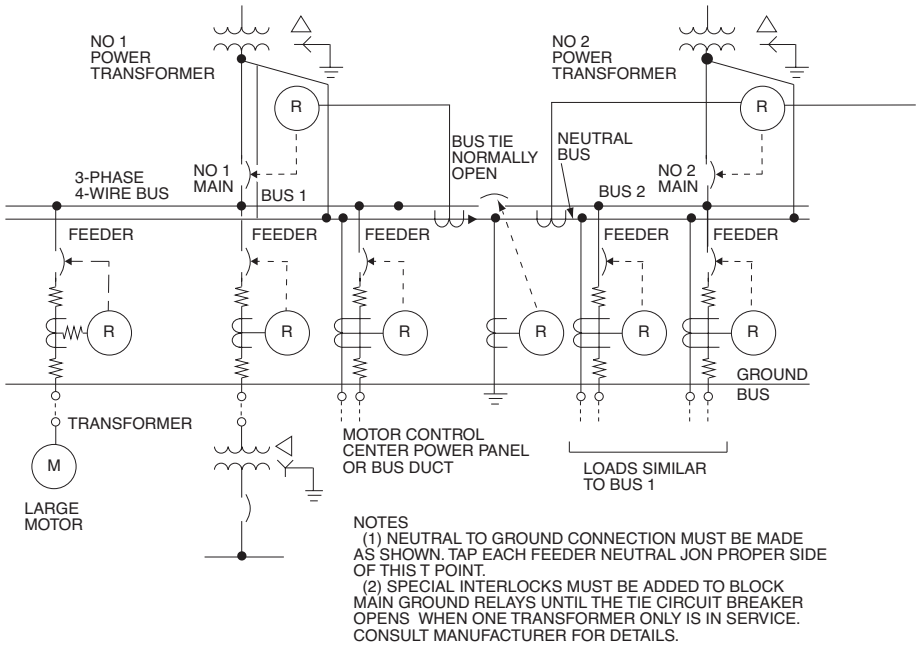

NOTE—Ground relays for feeders, tie, and mains should have time coordination.

Figure 8-24—Four-wire solidly grounded secondary selective system

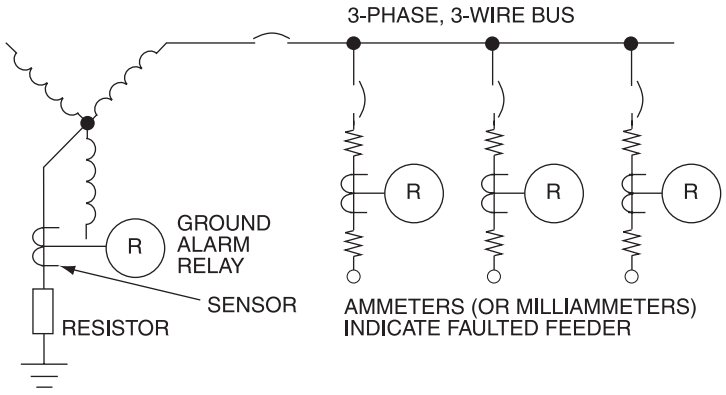

Figure 8-25—High-resistance-grounded system using core-balance CTs and fault-indicating ammeters

Copyright © 2001 IEEE. All rights reserved.

Copyright The Institute of Electrical and Electronics Engineers, Inc.
Provided by IHS under license with IEEE
No reproduction or networking permitted without license from IHS
Not for Resale

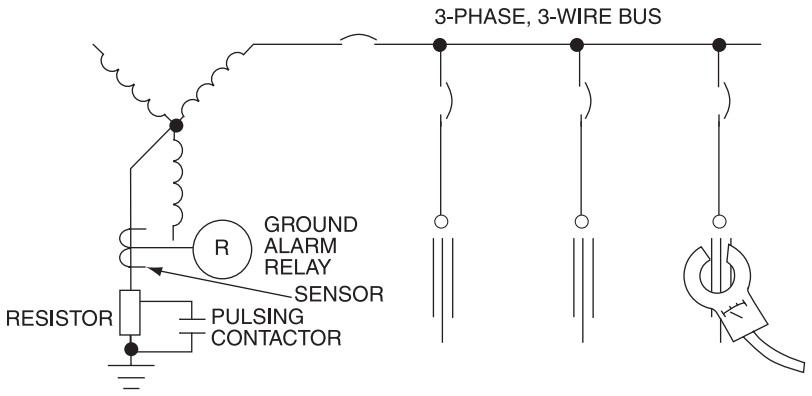

Figure 8-26—High-resistance-grounded system with pulsing contactor to locate faulted feeder

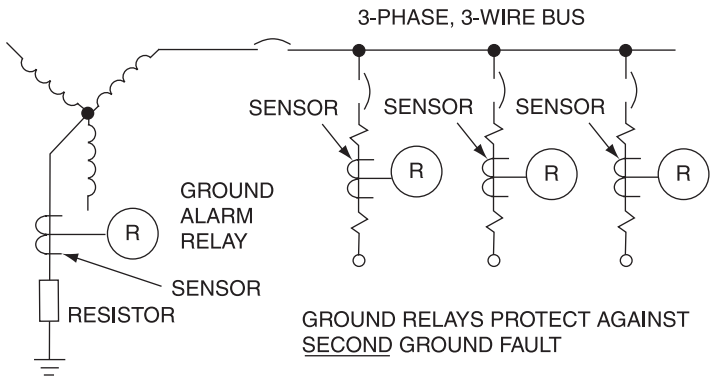

Figure 8-27—High-resistance-grounded system that continues operation on first ground fault while ground relays protect against second ground fault

An alternate vault arrangement that has been used is shown in Figure 8-31. In this figure, the vault is sectionalized into two halves. One of the advantages of this setup is that a vault fault does not shut off all electrical service to the user. Ground-fault protection is essentially identical to the protection shown in Figure 8-30. An alternate ground-fault protection scheme consisting of continuous and probe heat-sensing systems is described in Stanback [B42].

Copyright © 2001 IEEE. All rights reserved.

Copyright The Institute of Electrical and Electronics Engineers, Inc.
Provided by IHS under license with IEEE
No reproduction or networking permitted without license from IHS
Not for Resale

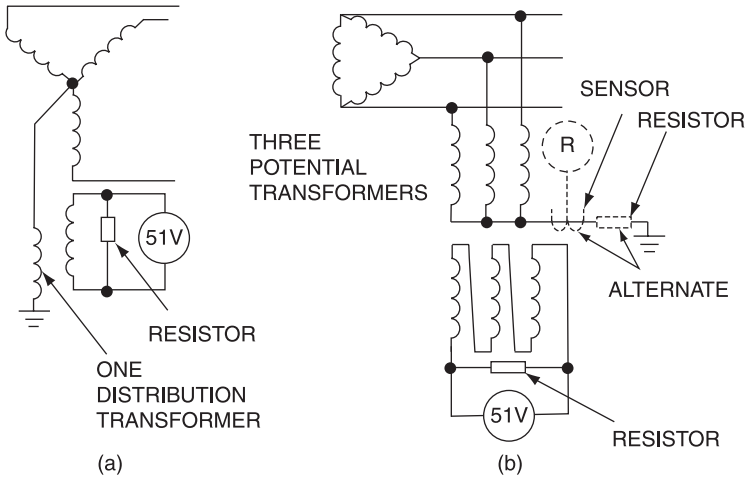

a) Wye-connected system
b) Delta-connected system

Figure 8-28—High-resistance grounding using distribution or grounding transformers

Copyright © 2001 IEEE. All rights reserved.

Copyright The Institute of Electrical and Electronics Engineers, Inc.
Provided by IHS under license with IEEE
No reproduction or networking permitted without license from IHS
Not for Resale

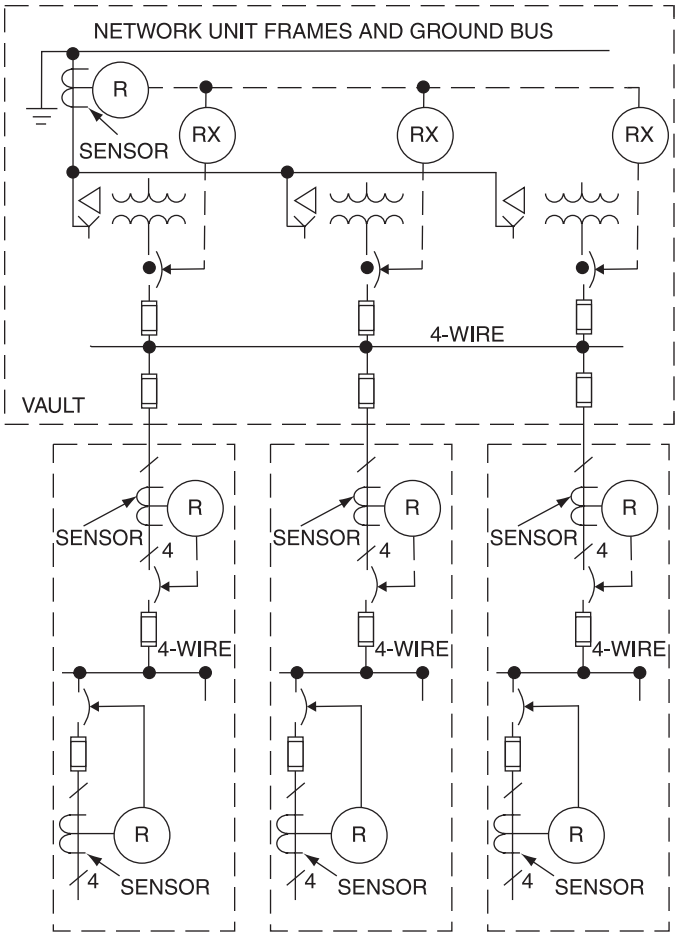

Figure 8-29—Ground-fault protection for typical three-transformer spot network

Copyright © 2001 IEEE. All rights reserved.

Copyright The Institute of Electrical and Electronics Engineers, Inc.
Provided by IHS under license with IEEE
No reproduction or networking permitted without license from IHS
Not for Resale

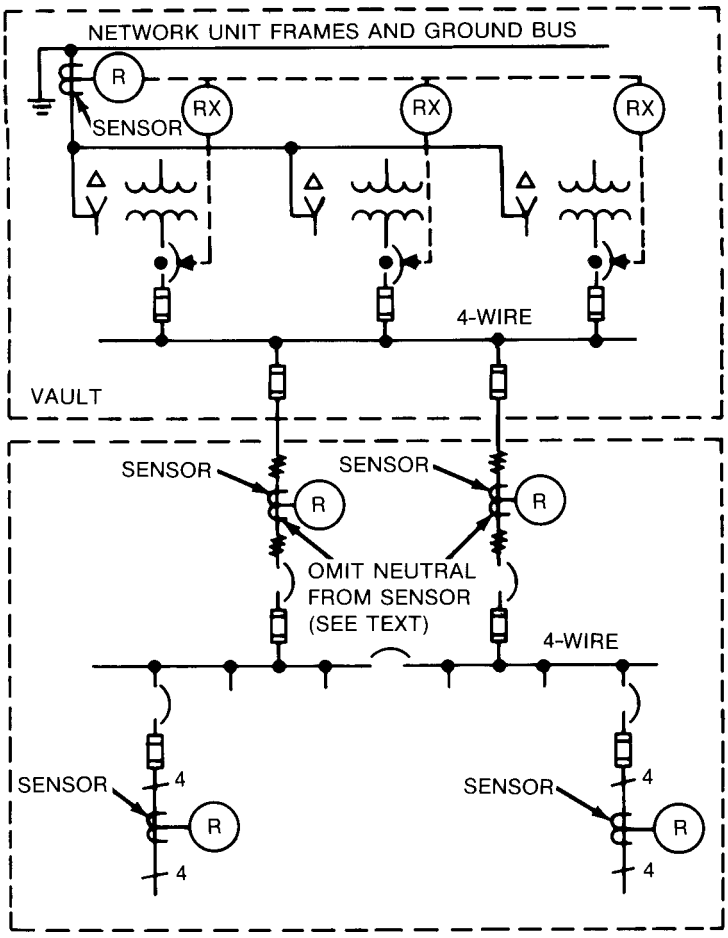

Figure 8-30—Ground-fault protection for spot network when user switchgear is secondary selective

Copyright © 2001 IEEE. All rights reserved.

Copyright The Institute of Electrical and Electronics Engineers, Inc.
Provided by IHS under license with IEEE
No reproduction or networking permitted without license from IHS
Not for Resale

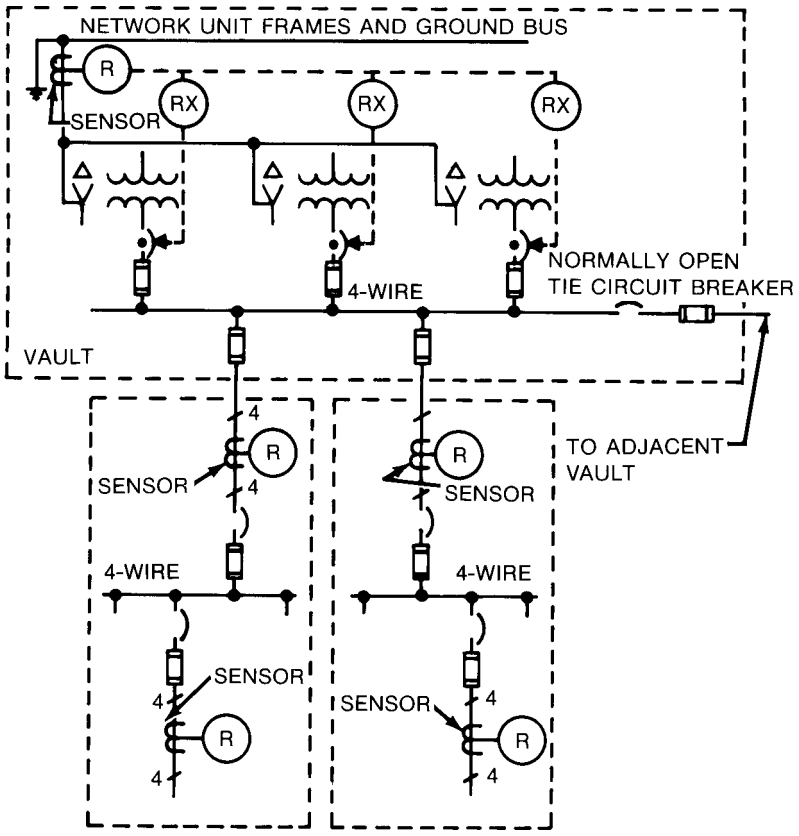

Figure 8-31—Ground-fault protection for sectionalized vault bus spot network

Copyright © 2001 IEEE. All rights reserved.

Copyright The Institute of Electrical and Electronics Engineers, Inc.
Provided by IHS under license with IEEE
No reproduction or networking permitted without license from IHS
Not for Resale

8.7 References

This recommended practice shall be used in conjunction with the following standards. When the following standards are superseded by an approved revision, the revision shall apply.

IEEE Std 141-1993 (Reaff 1999), IEEE Recommended Practice for Electric Power Distribution for Industrial Plants (*IEEE Red Book*).[2]

IEEE Std 142-1991, IEEE Recommended Practice for Grounding of Industrial and Commercial Power Systems (*IEEE Green Book*).

NEMA PB 2.2-1999, Application Guide for Ground-Fault Protective Devices for Equipment.[3]

NFPA 70-1999, National Electrical Code® (NEC®).[4]

8.8 Bibliography

[B1] ANSI C37.16-2000, American National Standard Preferred Ratings, Related Requirements, and Application Recommendations for Low-Voltage Power Circuit Breakers and AC Power Circuit Protectors.[5]

[B2] ANSI C37.17-1997, American National Standard for Trip Devices for AC and General-Purpose DC Low-Voltage Power Circuit Breakers.

[B3] Bailey, B. G., "Clearing Low-Voltage Ground Faults with Solid-State Trips," *IEEE Transactions on Industry and General Applications*, vol. IGA-3, pp. 60–65, Jan./Feb. 1967.

[B4] Bailey, B. G., and Heilmann, G. H., "Clear Low-Voltage Ground Faults with Solid-State Trips," *Power Magazine*, pp. 69–71, Mar. 1966.

[B5] Beeman, D. L., ed., *Industrial Power Systems Handbook*. New York: McGraw-Hill, 1955.

[B6] Bisson, A. J., and Rochau, E. A., "Iron Conduit Impedance Effects in Ground Circuit Systems," *AIEE Transactions on Applications and Industry*, pt. II, vol. 73, pp. 104–107, July 1954.

---

[2]IEEE publications are available from the Institute of Electrical and Electronics Engineers, 445 Hoes Lane, P.O. Box 1331, Piscataway, NJ 08855-1331, USA (http://standards.ieee.org/).

[3]NEMA publications are available from Global Engineering Documents, 15 Inverness Way East, Englewood, CO 80112, USA (http://global.ihs.com/).

[4]The NEC is published by the National Fire Protection Association, Batterymarch Park, Quincy, MA 02269, USA (http://www.nfpa.org/). Copies are also available from the Institute of Electrical and Electronics Engineers, 445 Hoes Lane, P.O. Box 1331, Piscataway, NJ 08855-1331, USA (http://standards.ieee.org/).

[5]ANSI publications are available from the Sales Department, American National Standards Institute, 11 West 42nd Street, 13th Floor, New York, NY 10036, USA (http://www.ansi.org/).

Copyright © 2001 IEEE. All rights reserved.

Copyright The Institute of Electrical and Electronics Engineers, Inc.
Provided by IHS under license with IEEE
No reproduction or networking permitted without license from IHS
Not for Resale

[B7] Brinks, J. W., and Wolfinger, J. P., "System Grounding Protection and Detection for Cement Plants," *IEEE Transactions on Industry Applications*, vol. IA-17, no. 6, pp. 587–596, Nov./Dec. 1981.

[B8] Castenschiold, R., "Ground-Fault Protection of Electrical Systems with Emergency or Standby Power," *IEEE Transactions on Industry Applications*, vol. IA-13, no. 6, pp. 517–523, Nov./Dec. 1977.

[B9] Chumakov, W. V., "Grounding and Ground-Fault Protection—Part 1, Single-Source Power Systems," Conference Record, IEEE IAS Annual Meeting, pp. 417–422, Sept. 1980.

[B10] Conrad, R. R., and Dalasta, D. A., "New Ground Fault Protective System for Electrical Distribution Circuits," *IEEE Transactions on Industry and General Applications*, vol. IGA-3, pp. 217–227, May/June 1967.

[B11] Dalasta, D., "Ground Fault Protection for Low and Medium Voltage Distribution Circuits," *Proceedings of the American Power Conference*, vol. 32, pp. 885–895, 1970.

[B12] Dunki-Jacobs, J. R., "The Effects of Arcing Ground Faults on Low-Voltage System Design," *IEEE Transactions on Industry Applications*, vol. IA-8, no. 3, pp. 223–230, May/June 1972.

[B13] Edmunds, W. H., Schweizer, J. H., and Graves, R. C., "Protection Against Ground Fault Hazards in Industry, Hospital, and Home," Conference Record, IEEE Industry and General Applications Group Annual Meeting, IEEE 68C27-IGA, pp. 863–874, 1968.

[B14] Fisher, L. E., "Arcing-Fault Relays for Low-Voltage Systems," *IEEE Transactions on Applications and Industry*, vol. 82, pp. 317–321, Nov. 1963.

[B15] Fisher, L. E., "Proper Grounding Can Improve Reliability in Low-Voltage Systems," *IEEE Transactions on Industry and General Applications*, vol. IGA-5, pp. 374–379, July/Aug. 1969.

[B16] Fisher, L. E., "Resistance of Low-Voltage AC Arcs," *IEEE Transactions on Industry and General Applications*, vol. IGA-6, pp. 607–616, Nov./Dec. 1970.

[B17] Fisher, L. E., and Schwieger, W. L., "Tripping Network Protectors to Protect Service Entrance Conductors to Industrial and Commercial Buildings," *IEEE Transactions on Industry and General Applications*, vol. IGA-5, pp. 536–539, Sept./Oct. 1969.

[B18] Fox, F. K., Grotts, H. J., and Tipton, C. H., "High-Resistance Grounding of 2400 V Delta Systems with Ground-Fault Alarm and Traceable Signal to Fault," *IEEE Transactions on Industry and General Applications*, vol. IGA-1, pp. 366–372, Sept./Oct. 1965.

[B19] Freund, A., "Ground-Fault Protection: How It Works," *Electrical Construction and Maintenance*, pp. 53–60, June 1973.

 Copyright © 2001 IEEE. All rights reserved.

Copyright The Institute of Electrical and Electronics Engineers, Inc.
Provided by IHS under license with IEEE
No reproduction or networking permitted without license from IHS Not for Resale

[B20] Freund, A., "Ground-Fault Protection for Ungrounded Distribution Systems," *Electrical Construction and Maintenance*, pp. 80–84, June 1979.

[B21] Gienger, J. A., Davidson, O. C., and Brendel, R. W., "Determination of Ground-Fault Current on Common AC Grounded Neutral Systems in Standard Steel or Aluminum Conduit," *AIEE Transactions on Applications and Industry*, pt. II, vol. 79, pp. 84–90, May 1960.

[B22] Gross, E. T. B., "Sensitive Ground Protection for Transmission Lines and Distribution Feeders," *AIEE Transactions*, vol. 60, pp. 968–975, 1941.

[B23] lEEE Std 446-1995 (Reaff 2000), IEEE Recommended Practice for Emergency and Standby Power Systems for Industrial and Commercial Applications (*IEEE Orange Book*).

[B24] Kaufmann, R. H., "Application Limitations of Single-Pole Interrupters in Polyphase Industrial and Commercial Building Power Systems," *IEEE Transactions on Applications and Industry*, vol. 82, pp. 363–368, Nov. 1963.sd

[B25] Kaufmann, R. H., "Some Fundamentals of Equipment-Grounding Circuit Design," *AIEE Transactions on Applications and Industry*, pt. II, vol. 73, pp. 227–232, Nov. 1954.

[B26] Kaufmann, R. H., "Let's Be More Specific about Grounding Equipment," *Proceedings of the American Power Conference*, vol. 24, pp. 913–922, 1962.

[B27] Kaufmann, R. H., "Ignition and Spread of Arcing Faults," Conference Record, IEEE I&CPS and Electric Space Heating and Air Conditioning Joint Technical Conference, IEEE 69C23-IGA, pp. 70–72, 1969.

[B28] Kaufmann, R. H., and Page, J. C., "Arcing-Fault Protection for Low-Voltage Power Distribution Systems-Nature of the Problem," *AIEE Transactions on Power Apparatus and Systems*, pt. III, vol. 79, pp. 160–167, June 1960.

[B29] Knobel, L. V. "A 480 V Ground Fault Protection System," *Electrical Construction and Maintenance*, pp. 110–112, Mar. 1970.

[B30] Kreiger, C. H., Lera, A. P., and Crenshaw, R. M., "Ground Fault Protection for Low-Voltage Systems," *Electrical Construction and Maintenance*, pp. 88–92, June 1967.

[B31] Love, D. J., "Designing a Comprehensive Coordinated 480 Volt Ground-Fault Protection System," Conference Record, IEEE IAS Annual Meeting, vol. 77CH1246-8-14, pp. 533–537, 1977.

[B32] Love, D. J., "Discussion of Predicting Damage from 277 V Single Phase Ground Arcing Faults," *IEEE Transactions on Industry Applications*, vol. IA-14, no. 1, pp. 93–95, Jan./Feb. 1978.

Copyright © 2001 IEEE. All rights reserved.

Copyright The Institute of Electrical and Electronics Engineers, Inc.
Provided by IHS under license with IEEE
No reproduction or networking permitted without license from IHS
Not for Resale

[B33] Love, D. J., "Ground-Fault Protection Electric Utility Generating Station Medium Voltage Auxiliary Power Systems," *IEEE Transactions on Power Apparatus and Systems*, vol. PAS-97, no. 2, pp. 583–586, Mar./Apr. 1978.

[B34] Neuhoff, C. J., "Improving Ground-Fault Protection by Monitoring Equipment Environment," Conference Record, IEEE IAS Annual Meeting, pp. 1204–1208, Oct. 1979.

[B35] O'Connor, J. J., "The Threat of Arcing Faults," *Power Magazine*, p. 48, July 1969.

[B36] Peach, N., "Protect Low-Voltage Systems from Arcing Fault Damage," *Power Magazine*, Apr. 1964.

[B37] Peach, N., "Get Ground Fault Protection Now," *Power Magazine*, pp. 84–87, Apr. 1968.

[B38] Quinn, G. C., "New Devices End an Old Electrical Hazard-Ground Faults," *Modern Manufacturing Magazine*, Apr. 1969.

[B39] Read, E. C., "Ground Fault Protection at Buick," *Industrial Power Systems*, vol. 2, June 1968.

[B40] Shields, F. J., "The Problem of Arcing Faults in Low-Voltage Power Distribution Systems," *IEEE Transactions on Industry and General Applications*, vol. IGA-3, pp. 15–25, Jan./Feb. 1967.

[B41] Soares, E. C., "Designing Safety into Electrical Distribution Systems," *Actual Specifying Engineer*, p. 38, Aug. 1968.

[B42] Stanback, H. I., "Predicting Damage from 277 V Single Phase to Ground Arcing Faults," *IEEE Transactions on Industry Applications*, vol. IA-13, no. 4, pp. 307–314, July/Aug. 1977.

[B43] Valvoda, F., "Protecting Against Arcing and Ground Faults," *Actual Specifying Engineer*, p. 92, May 1967.

[B44] UL 1053-1999, Ground-Fault Sensing and Relaying Equipment, Sixth Edition.[6]

[B45] Weddendorf, W. A., "Evidence of Need for Improved Coordination and Protection of Industrial Power Systems," *IEEE Transactions on Industry and General Applications*, vol. IGA-1, pp. 393–396, Nov./Dec. 1965.

[6]UL standards are available from Global Engineering Documents, 15 Inverness Way East, Englewood, CO 80112, USA (http://global.ihs.com/).

 Copyright © 2001 IEEE. All rights reserved.

Copyright The Institute of Electrical and Electronics Engineers, Inc.
Provided by IHS under license with IEEE
No reproduction or networking permitted without license from IHS Not for Resale

Chapter 9
Conductor protection

9.1 General discussion

This chapter deals with insulated power cable protection as well as with busway protection. The primary considerations are presented along with some methods of application.

The proper selection and rating or derating of power cables is as much a part of cable protection as the application of the short-circuit and overcurrent protection devices. The whole scheme of protection is based on a cable rating that is matched to the environment and operating conditions. Methods of assigning these ratings are discussed.

Power cables require short-circuit current, overload, and physical protection in order to meet the requirements of the National Electrical Code® (NEC®) (NFPA 70-1999).[1] A brief description of the phenomena of short-circuit current, overload current, and their temperature rises is presented, followed by a discussion of the time-current characteristics (TCCs) of both cables and protective devices. In addition, a number of illustrations of cable systems and typical selection and correlation of protective devices are included.

Because of their rigid construction, busways provide their own mechanical protection. However, they do require short-circuit current and overload protection. A brief discussion of the types of faults on the busways is presented, followed by a discussion of various methods of fault protection.

The general intent of this chapter is to provide a basis for design, to point out the problems involved, and to provide guidance in the application of cable and busway protection. Each specific case and type of cable or busway requires attention. In most cases, the attention is routine, but the out-of-the-ordinary cable and busway schemes require careful consideration.

9.2 Cable protection

Cables are the mortar that holds together the bricks of equipment in an electric system. If the cable system is inadequate, unsatisfactory operation inevitably results. Today's cables are vastly superior in performance to the cables available just a decade or so ago. But even so, they are not unlimited in power capability and, therefore, need protection to prevent possible operation beyond that capability.

Cables are generally classified as either power or control. Power cables are divided into two voltage classes: 600 V and below, and above 600 V. Control cables include cables used in the control of equipment and also for voice communication, metering, and data transmission.

[1]Information on references can be found in 9.9.

Copyright © 2001 IEEE. All rights reserved.

Copyright The Institute of Electrical and Electronics Engineers, Inc.
Provided by IHS under license with IEEE
No reproduction or networking permitted without license from IHS
Not for Resale

The amount of damage caused by the faulting of power cables has been illustrated many times. As power and voltage levels increase, the potential hazards also increase. High temperature due to continued overload, nonlinear loads, or uncoordinated fault protection is a frequent cause of decreased cable life and failure. Power cables, internally heated as a result of their resistance to the current being carried, can undergo insulation failure if the temperature buildup becomes excessive. Proper selection and rating ensures that the cable is large enough for the expected current. Suitable protection ensures that cable temperature rising above ambient does not become excessive. Such protection normally is provided by time-current sensitive devices. In addition to insulation breakdown, protection is also required against unexpected overload and short-circuit current. Overcurrent can occur due to an increase in the number of connected loads or due to overloading of existing equipment or due to nonlinear loads causing excessive neutral conductor current.

While the extraordinary temperature of the short-circuit arc produces extensive destruction of materials at a fault location, cables carrying energy to (and from) a fault may also incur thermal damage over their entire length if the fault current is not interrupted quickly enough. Depending on conductor size, insulation type, and available fault current, the clearing time of the protection system should be short enough (i.e., coordinated) to stop the current flow before damaging temperatures are reached.

Physical conditions can also cause cable damage and failure. Failure due to excessive heat may be caused by high ambient temperature conditions or fire. Mechanical damage may result in short circuits or reduced cable life and may be caused by persons, equipment, animals, insects, or fungi.

Cable protection is required to protect personnel and equipment and to ensure continuous service. From the standpoint of equipment and process, the type of protection selected is generally determined by economics and the engineering requirements. Personnel protection also receives careful engineering attention and special consideration to ensure compliance with the various codes that may be applicable to a particular installation.

Protection against overload is generally achieved by a device sensitive to current magnitude and duration. Short-circuit protective devices are sensitive to much greater currents and shorter times. Protection against environmental conditions takes on many forms.

Cables may also be damaged by sustained overvoltages such as exist during a ground fault on one phase conductor. Modern cables now bear a rating called percent insulation level (or % IL). This rating is described as follows:

a) 100% IL—Cables that may not be required to operate longer than 1 min in case of ground fault.
b) 133% IL—Cables that may not be required to operate longer than 1 h in case of a ground fault.
c) 173% IL—Cables that may be required to operate longer than 1 h continuously with one phase conductor grounded (manufacturers should be consulted for suitability).

Copyright © 2001 IEEE. All rights reserved.

Copyright The Institute of Electrical and Electronics Engineers, Inc.
Provided by IHS under license with IEEE
No reproduction or networking permitted without license from IHS
Not for Resale

The cable characteristics are not germane to this treatment, but the timing of the permissible protective system should be in accordance with the IL rating of the cables involved.

In general, this chapter covers methods of rating cables and the conditions and problems listed in this clause. It also provides a starting point from which further refinements may be made and other features added for improved power cable protection.

9.3 Definitions

The following symbols are used in cable protection technology. Some symbols are also used in other parts of electrical engineering practice, such as fault determination. However, because only a limited number of symbols are available and the ones shown in this clause are deeply rooted in cable technology, the duplication is tolerated.

9.3.1 Cable current (A)

I is current flowing in cable,
I_O is initial current prior to a current change,
I_F is final current after a current change,
I_N is normal loading current on base ambient temperature,
I_{N1} is normal loading current on nonbase ambient temperature,
I_E is emergency loading current on base ambient temperature,
I_X is current at values other than normal or emergency loading,
I_{SC} is three-phase short-circuit current.

9.3.2 Cable temperature (°C)

T is temperature, in general,
T_O is initial temperature prior to a current change,
T_f is final temperature after a current change,
T_N is normal loading temperature,
T_E is emergency loading temperature,
T_X is temperature at any loading current,
T_t is temperature at time t after a current change,
T_a is base ambient temperature,
T_{a1} is nonbase ambient temperature.

9.3.3 Miscellaneous

t is time (units as noted),
CM is conductor size (circular mils)
F_{ac} is skin effect ratio or ac/dc ratio [NEC (1999 edition), Table 9],
K is time constant or geometric factor of cable heat flow,
K_t is correction factor for initial and final short-circuit temperature.

Copyright © 2001 IEEE. All rights reserved.

Copyright The Institute of Electrical and Electronics Engineers, Inc.
Provided by IHS under license with IEEE
No reproduction or networking permitted without license from IHS
Not for Resale

9.3.4 Reactances (%)

X_T is transformer reactance,
X_d" is subtransient reactance of a rotating machine,
X_d' is transient reactance of a synchronous machine.

9.4 Short-circuit current protection of cables

A cable should be protected from overheating due to excessive short-circuit current flowing in its conductor. The fault point may be on a section of the protected cable or on any other part of the electric system. The faulted cable section is, of course, to be replaced after the fault has been cleared.

During a phase fault, the I^2R losses in the phase conductors elevate first the temperature of the conductor, followed by the insulation materials, protective jacket, raceway, and surroundings. During a ground fault, the I^2R losses in both phase conductor and metallic shield or sheath elevate the temperature in a similar manner to phase faults.

In most cases, the shield of the cable beyond the fault also carries part of the fault return current, which may then return along the shields of other conductors or equipment grounding paths, from common grounding points.

Because the short-circuit current is interrupted either instantaneously or in a short time by the protective device, the amount of heat transferred from the metallic conductors outward to the insulation and other materials is small. Therefore, the heat from I^2R losses is almost entirely in the conductors; and, for practical purposes, it can be assumed that 100% of the I^2R losses are consumed to elevate the conductor temperature. During the period that the short-circuit current is flowing, the conductor temperature should not be permitted to rise to the point where it may damage the insulating materials. The task of providing cable protection during a short-circuit condition involves determining the following:

— Maximum available short-circuit currents
— Maximum conductor temperature that will not damage the insulation
— Cable conductor size that affects the I^2R value and its capability to contain the heat
— Longest time that the fault can exist and the fault current can flow

9.4.1 Short-circuit current

9.4.1.1 Phase-fault current and rates of decay

The fundamentals of short-circuit current behavior and the calculation of short-circuit currents are described in Chapter 2. The magnitude of short-circuit current should be properly determined. As illustrated in Figure 9-1, the initial peak current is called asymmetrical current (or current for momentary duty). This current then decays in sequence to the subtransient current, transient current, and synchronous current or sustained short-circuit current. The short-circuit current decays exponentially in the subtransient and transient

Copyright © 2001 IEEE. All rights reserved.

--`,,`,,`,,`,,`,,`,,`---

Copyright The Institute of Electrical and Electronics Engineers, Inc.
Provided by IHS under license with IEEE
No reproduction or networking permitted without license from IHS Not for Resale

periods. Figure 9-1 shows the approximate rate of decay of the total current. Four typical systems are illustrated in this figure to give a general picture of the fault-current behavior. The decay rate in each system depends on the *X*/*R* ratio of the system; higher *X*/*R* ratios are found on medium-voltage systems with local generation.

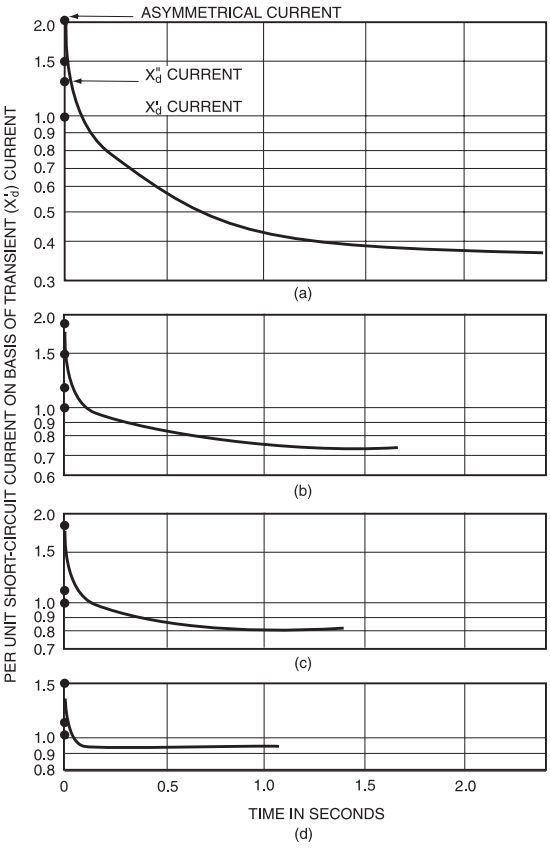

a) Plant generator system, medium-voltage
b) Utility-power supplied system, medium-voltage, with large synchronous motors
c) Utility-power supplied system, medium-voltage, no synchronous motor
d) Utility or plant generation, low-voltage 240 V or 480 V load centers

Figure 9-1—Typical rate of short-circuit current decay

9.4.1.2 Maximum short-circuit currents

Generally, the subtransient current of a system is used to designate the maximum available short-circuit current in the cables protected by the instantaneous overcurrent relays and medium-voltage switchgear circuit breakers. For cables protected by noncurrent-limiting fuses or noncurrent-limiting low-voltage instantaneous trip circuit breakers, the asymmetrical current value is used. The effective current for cables protected by current-limiting devices [e.g., fuses, molded-case circuit breakers (MCCBs), cable limiters] in the current-limiting range is the root-mean-square (rms) value of the let-through current as determined from the

Copyright © 2001 IEEE. All rights reserved.

--`,,`-`-`,,`,,`,`,,`---
Copyright The Institute of Electrical and Electronics Engineers, Inc.
Provided by IHS under license with IEEE
No reproduction or networking permitted without license from IHS
Not for Resale

manufacturers' let-through curves (see Example 1 in 9.4.4.2). For delayed tripping of 0.2 s or longer, the rms value of the decayed current over the flow period of fault current should be used.

9.4.1.3 Short-circuit currents based on equipment ratings

For liberal design margins where economic considerations are not critical, the interrupting current ratings of the noncurrent-limiting circuit breakers or noncurrent-limiting fuses may be used as the basis for cable selection and protection. This approach, of course, assumes that the protective devices have been applied within their ratings.

9.4.1.4 Ground-fault currents and rates of decay

The fundamentals of ground short-circuit current behavior are similar to the characteristics of phase-fault current, but the calculations are different, as described in Chapter 2 and Chapter 8. For a solidly grounded system, the ground-fault current is in the same order of magnitude as the phase-fault current. For a low-resistance-grounded system, the magnitude of the ground-fault current is limited to a sustained value determined by the resistor's current rating. The decay of the dc component occurs so rapidly that the asymmetry effect in the current wave shape can be ignored. For a high-resistance-grounded or ungrounded system, the ground-fault current is small, but should be immediately alarmed and quickly cleared to prevent persistent arcing and the occurrence of a more serious fault involving other conductors or circuits.

Ground-fault currents of over 3 A to 4 A are likely to ignite organic insulation in the arc path within a few minutes, developing a local fire and subsequent phase-to-phase fault, with extensive damage.

9.4.2 Conductor temperature

9.4.2.1 Temperature rise of phase, neutral, or insulated grounding conductors

On the basis that all heat is absorbed by the conductor metal and no heat is transmitted from the conductor to the insulation material, the temperature rise is a function of the size of the metallic conductor, the magnitude of the fault current, and the time of the current flow. These variables are related by the following empirical equations (see ICEA P-32-382-1999):

$$\left(\frac{I}{CM}\right)^2 (tF_{ac}) = 0.0297 \log_{10} \frac{T_f + 234}{T_O + 234} \text{ for copper}$$

$$\left(\frac{I}{CM}\right)^2 (tF_{ac}) = 0.0125 \log_{10} \frac{T_f + 228}{T_O + 228} \text{ for aluminum}$$

If the initial temperature T_O and final temperature T_f are predetermined on the basis of continuous-current rating and insulation material, respectively, the current I versus time t relation of current flow can be plotted for each conductor size (CM).

Copyright © 2001 IEEE. All rights reserved.

Copyright The Institute of Electrical and Electronics Engineers, Inc.
Provided by IHS under license with IEEE
No reproduction or networking permitted without license from IHS Not for Resale

9.4.2.2 Temperature rise of shield and sheath

On the same basis as for phase conductors, the temperature rise on the shield or sheath due to ground-fault current can be related to the magnitude of the fault current I, the cross section CM of the shield and sheath, the spiral cross section and length for the spiral, tape shield, and the time t of current flow, as shown in Table 9-1 (see ICEA P-45-482-1999).

Table 9-1—Temperature rise of shield and sheath due to ground-fault current

Material	Initial/Final temperatures		
	65/200 °C	65/150 °C	90/250 °C
Copper	$I = 0.0694\frac{CM}{\sqrt{t}}$	$I = 0.0568\frac{CM}{\sqrt{t}}$	$I = 0.0779\frac{CM}{\sqrt{t}}$
Aluminum	$I = 0.0453\frac{CM}{\sqrt{t}}$	$I = 0.0371\frac{CM}{\sqrt{t}}$	$I = 0.0509\frac{CM}{\sqrt{t}}$
Lead	$I = 0.0124\frac{CM}{\sqrt{t}}$	$I = 0.0103\frac{CM}{\sqrt{t}}$	$I = 0.0141\frac{CM}{\sqrt{t}}$
Steel	$I = 0.0249\frac{CM}{\sqrt{t}}$	$I = 0.0205\frac{CM}{\sqrt{t}}$	$I = 0.0281\frac{CM}{\sqrt{t}}$

A comprehensive study has been conducted of the flow of ground-fault currents through shields, conduits, and ground wires during ground faults in connected equipment (see Hamer and Wood [B2]). Contrary to intuition, most of the ground-fault return current does not return through the shields of the cables connected to the phase that includes the equipment ground fault. (In a fault between a conductor and its own metallic shield, the faulted shield would carry most of the ground return current, but external ground faults in connected equipment are the major concern of this subclause.) Tests show that little difference exists in the magnitudes of the ground-fault return currents through the shields of individual cables connected to equipment that contains a ground fault. The impedances of cable shields routinely used in industry are relatively high compared with other ground return paths, such as ground wires within conduits or the conduit itself. Accordingly, the ground-fault return current divides among several paths with most of the current diverted away from the shields. While the scope of this chapter does not include covering the actual division of these currents, guidelines for protecting shields can be provided. For through ground faults of under 1000 A and conventional operating times of ground protection relays, Hamer and Wood have concluded that metallic shields are not being damaged during ground faults. For ground faults exceeding 1000 A, a ground wire should be included within the conduits to provide a reliable low-impedance ground return path. This setup is especially applicable for systems using rigid-steel conduit as the return path. Without ground wires within the conduit, sparking at the couplings (see Kaufmann [B9]) may occur during faults with the resulting risks for conduits routed through hazardous (or classified) locations (see the NEC). The use

Copyright © 2001 IEEE. All rights reserved.

Copyright The Institute of Electrical and Electronics Engineers, Inc.
Provided by IHS under license with IEEE
No reproduction or networking permitted without license from IHS
Not for Resale

of a ground wire also eliminates concern over corroded or loose couplings and bushings. Chapter 2 of IEEE Std 142-1991 contains information for the sizing of ground wires.

9.4.2.3 Maximum short-circuit temperature ratings

ICEA P-32-382-1999 established a guideline for short-circuit temperatures for various types of insulation as shown in Table 9-2. The short-circuit temperature ratings are considered the maximum temperatures and, to protect the cable insulation from damage, should not be exceeded. General agreement does not exist that the temperatures from ICEA P-32-382-1999 accurately depict conductor temperatures because they are calculated rather than measured. However, agreement does exist that the temperatures shown in Table 9-2 are higher than actual and, therefore, conservative for the purposes of this chapter.

Table 9-2—Maximum short-circuit temperatures

Type of insulation	Continuous temperature rating T_O (˚C)	Short-circuit current temperature rating T_f (˚C)
Rubber	75	200
Rubber	90	250
Silicone rubber	125	250
Thermoplastic	60, 75, 90	150
Paper	85	200
Vanishing cloth	85	200

9.4.2.4 Temperature-current-time curves

For convenience in determining the cable size, the curves depicting the relationship of temperature-current-time are prepared from the temperature rise formula and are based on the temperature rise from the continuous to short-circuit temperature limits. Figure 9-2 and Figure 9-3 show the curves for copper and aluminum conductors from 75 ˚C to 200 ˚C. They also incorporate the total fault-clearing times of various types of switching equipment. For competent design, a cable may be selected on the basis of the expected load current, total short-circuit clearing time, and available short-circuit current. For example, AWG # 2/0 copper cable may be selected for connection to a circuit capable of producing 21 000 A with a clearing time of 8 cycles, and # 4/0 aluminum cable may be selected for connection to the same circuit.

Copyright © 2001 IEEE. All rights reserved.

Copyright The Institute of Electrical and Electronics Engineers, Inc.
Provided by IHS under license with IEEE
No reproduction or networking permitted without license from IHS
Not for Resale

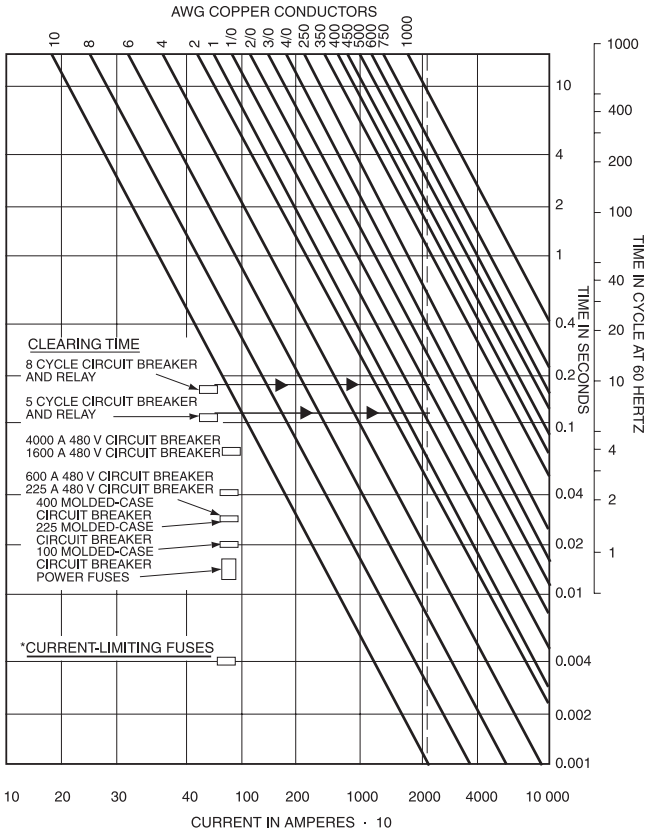

*Clearing time of current-limiting fuses and current-limiting MCCBs in current-limiting range is approximately 0.25 cycles (0.004 s). See Table 9-3a through Table 9-3e.

Figure 9-2—Maximum short-circuit current for insulated copper conductors (initial temperature 75 ˚C; final temperature 200 ˚C; for other temperatures use correction factors of Figure 9-4)

9.4.2.5 Initial and final temperatures

For cables rated at initial (or operating) and final (or maximum short-circuit) temperatures different from 75 ˚C and 200 ˚C, respectively, correction factors for use with Figure 9-2 and Figure 9-3 may be determined by use of Figure 9-4. With this chart, a correction factor is obtained by which the actual available fault current is converted to a virtual available fault current that is then used with Figure 9-2 and Figure 9-3. The actual available fault current is multiplied by the correction factor K_t to obtain the virtual available fault current.

Using Figure 9-4, the following examples were calculated:

a) Initial temperature = 50 ˚C
   Maximum fault temperature = 200 ˚C

Copyright © 2001 IEEE. All rights reserved.

Copyright The Institute of Electrical and Electronics Engineers, Inc.
Provided by IHS under license with IEEE
No reproduction or networking permitted without license from IHS
Not for Resale

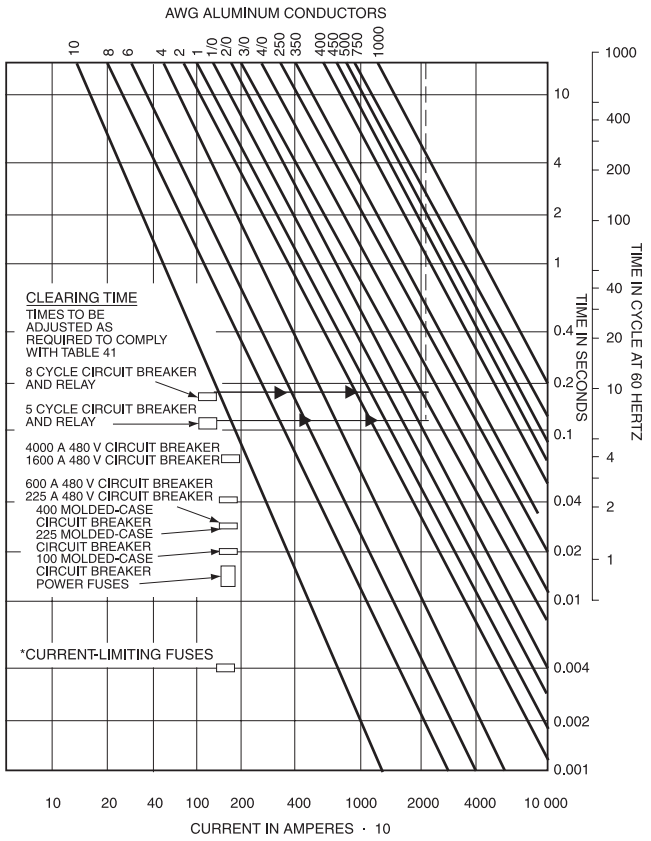

*Clearing time of current-limiting fuses and current-limiting molded-case circuit breakers in current-limiting range is approximately 0.25 cycles (0.004 s). See Table 9-3a through Table 9-3e.

Figure 9-3—Maximum short-circuit current for insulated aluminum conductors (initial temperature 75 ˚C; final temperature 200 ˚C; for other temperatures use correction factors of Figure 9-4)

$K_t = 0.899$

Actual available fault current = 20 000 A

Virtual available fault current = 0.899 × 20 000 = 17 980 A on Figure 9-2 and Figure 9-3

b) Initial temperature = 90 ˚C

Maximum fault temperature = 250 ˚C

$K_t = 0.925$

Actual available fault current = 20 000 A

Virtual available fault current = 0.925 × 20 000 = 18 500 A on Figure 9-2 and Figure 9-3

Copyright © 2001 IEEE. All rights reserved.

Copyright The Institute of Electrical and Electronics Engineers, Inc.
Provided by IHS under license with IEEE
No reproduction or networking permitted without license from IHS
Not for Resale

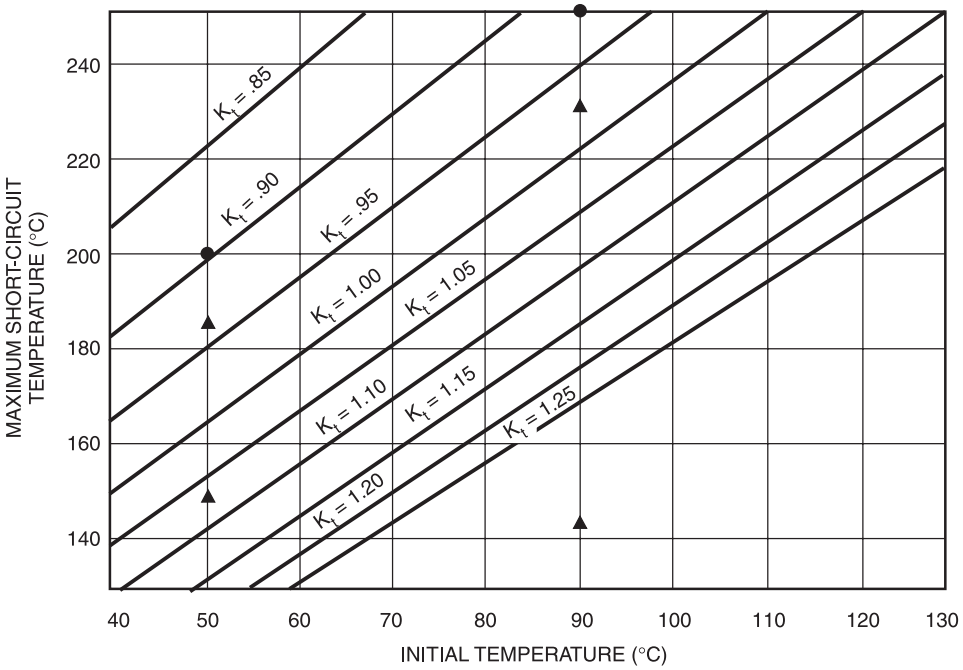

Figure 9-4—Correction factors K_t for initial and maximum short-circuit temperatures

In both cases, a smaller conductor might be safely used.

9.4.3 Protective devices

9.4.3.1 Total fault-clearing time

Devices to protect cables against short-circuit damage should have high reliability and fast fault-clearing time. In the protective scheme, primary protection is the first line of defense, and backup protection, the second line of defense. Primary protection normally provides prompt, but not necessarily instantaneous, fault-clearing time while backup protection is timed for more delayed fault-clearing time. Whether these two levels of protection are to be provided for all cables is a decision to be made in initial design stages. Total clearing times are defined as follows:

a) *Relayed circuit breaker.* Total fault-clearing time equals overcurrent relay time plus auxiliary relay time (if used) plus circuit breaker interrupting time.

b) *Direct tripping circuit breaker.* Total fault-clearing time equals circuit breaker clearing time.

c) *Fuses.* Total fault-clearing time equals melting time plus arcing time.

Copyright © 2001 IEEE. All rights reserved.

Copyright The Institute of Electrical and Electronics Engineers, Inc.
Provided by IHS under license with IEEE
No reproduction or networking permitted without license from IHS
Not for Resale

9.4.3.2 Protective devices and clearing time

The total clearing time of various types of protective devices depends on the type of relay and circuit breakers or fuses used. Table 9-3a through Table 9-3e estimate the total clearing times of various types of protective devices.

Table 9-3a—Estimated clearing times of protective devices: relayed circuit breakers, 2.4–13.8 kV

	Plunger, instantaneous	Type of relay induction, instantaneous	Induction, inverse time
Relay times (cycles)	0.25–1	0.5–2	6–6000
Circuit breaker interrupting time (cycles)	3–8	3–8	3–8
Total time (cycles)	3.25–9	3.5–10	9–6000

Table 9-3b—Estimated clearing times of protective devices: molded-case circuit breakers, 600 kV and below

	Frame size	
	225–600 A	1600–4000 A
Instantaneous (cycles)	2–3	3
Short time (cycles)	10–30	10–30
Long time (s)	over 100	
Ground fault (cycles)	10–30	10–30

Table 9-3c—Estimated clearing times of protective devices: power circuit breakers, 600 kV and below

	Frame size		
	100 A	225–1200 A	100–1200 A (current limiting)
Instantaneous (cycles)	0.5–1	1–1.5	Less than 0.5
Long time (s)	over 100		

Copyright © 2001 IEEE. All rights reserved.

Copyright The Institute of Electrical and Electronics Engineers, Inc.
Provided by IHS under license with IEEE
No reproduction or networking permitted without license from IHS Not for Resale

Table 9-3d—Estimated clearing times of protective devices: medium- and high-voltage fuses

High current	0.25 cycles (for current-limiting fuses operating in their current-limiting range) 1.0 cycles (for power fuses at maximum current)
Low current	600 s (for E-rated fuses operating at 2 times nominal rating; other ratings are available with different times at 2 times nominal rating)

Table 9-3e—Estimated clearing times of protective devices: low-voltage fuses

High current	0.25 cycles (in current-limiting range)
Low current	1000 s (at 1.35 to 1.5 times nominal rating)

For convenience, the total clearing time of various overcurrent devices is shown in the lower left-hand corner of Figure 9-2 and Figure 9-3. These data can be used together with maximum short-circuit current for proper selection of cable sizes.

9.4.3.3 TCCs of protective devices

A protective device provides maximum protection if its TCCs are suitably below (i.e., 20% in time) the TCCs of the cable short-circuit current versus the time curves shown in Figure 9-2 and Figure 9-3. Thus the selection of fuses, overcurrent relays, or circuit breakers is vitally important to the protection of cables. Figure 9-5, Figure 9-6, and Figure 9-7 illustrate the characteristics of relays and devices commonly used in feeder circuits. Shown also are the maximum available short-circuit currents of the system and the maximum short-circuit current curve of the cable.

9.4.3.4 Backup protection

In some instances, the setting or rating of a given device, rather than just protecting the immediate downstream element, may be selected to protect the second downstream element (e.g., cable). This setup would come into play if a protective device failed; in other words, the next upstream device would operate in adequate time to prevent damage to elements such as cable on the load side of the failed device. This feature is known as backup protection.

Backup protection is almost never applied to industrial or commercial branch circuits, but is occasionally applied to feeder and subfeeder protection. The consequences resulting from failure of a feeder or subfeeder protective device need to be considered in deciding whether backup protection should be provided. Such protection is frequent in utility system practice, but not generally used in industrial or commercial systems.

Copyright © 2001 IEEE. All rights reserved.

Copyright The Institute of Electrical and Electronics Engineers, Inc.
Provided by IHS under license with IEEE
No reproduction or networking permitted without license from IHS
Not for Resale

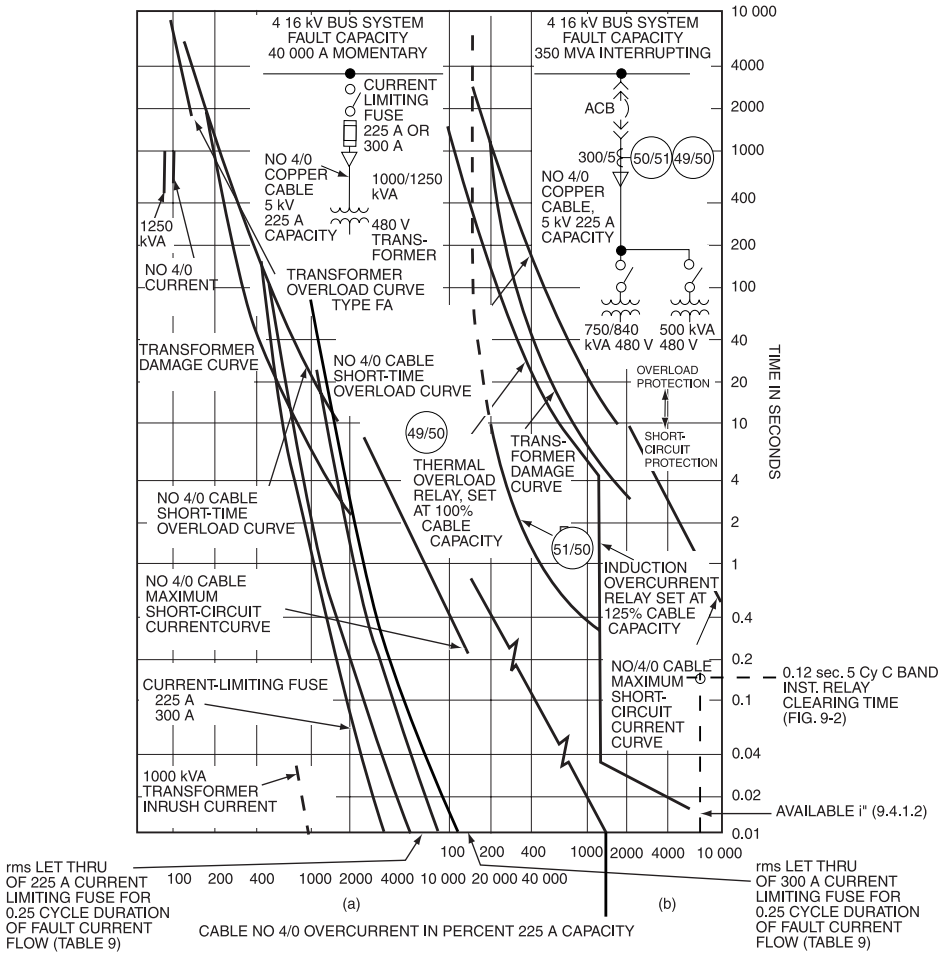

a) Power or current-limiting fuses
b) Overcurrent relay

Figure 9-5—Short-circuit and overload protection of 5 kV cables

9.4.4 Application of short-circuit current protective devices

9.4.4.1 Typical cases of cable protection

Power cables are used for transmission or distribution, or as feeders to utilization equipment. The following cases are typical in industrial and commercial power systems:

a) A single cable feeder through a pull box or splice joint or with taps should be protected in the same manner as feeders to panels [see Views (b), (d), (e), and (f) of Figure 9-8].

Copyright © 2001 IEEE. All rights reserved.

Copyright The Institute of Electrical and Electronics Engineers, Inc.
Provided by IHS under license with IEEE
No reproduction or networking permitted without license from IHS
Not for Resale

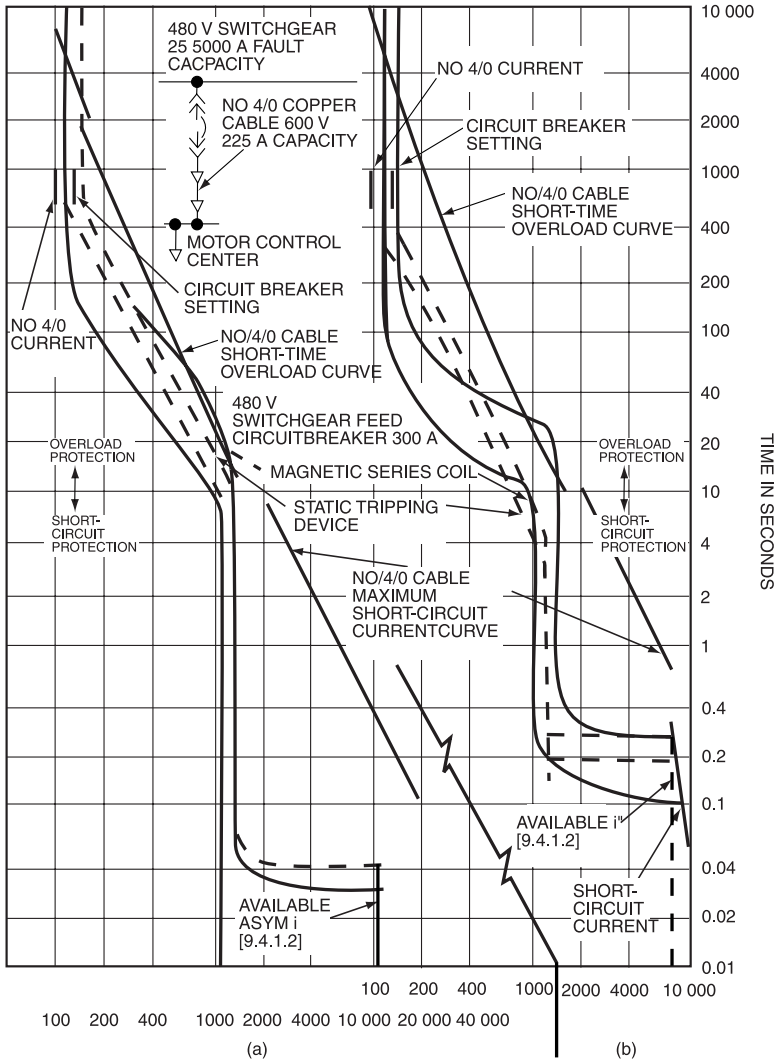

a) Long-time and instantaneous equipped circuit breakers
b) Long-time and short-time equipped circuit breakers

Figure 9-6—Short-circuit and overload protection of 600 V cables

b) A single or multiple cable feeder without a pull box or taps should be protected from the maximum short-circuit current that can occur at the load terminals.

A multiple cable feeder with or without pull box or splice joint should be protected from the maximum short-circuit current caused by a fault on one cable. The short-circuit current in each cable is not equally distributed because the maximum current on the faulted cable is greater than the total current divided by the number of

Copyright © 2001 IEEE. All rights reserved.

--`,,`-`-`,,`,,`,`,,`---

Copyright The Institute of Electrical and Electronics Engineers, Inc.
Provided by IHS under license with IEEE
No reproduction or networking permitted without license from IHS
Not for Resale

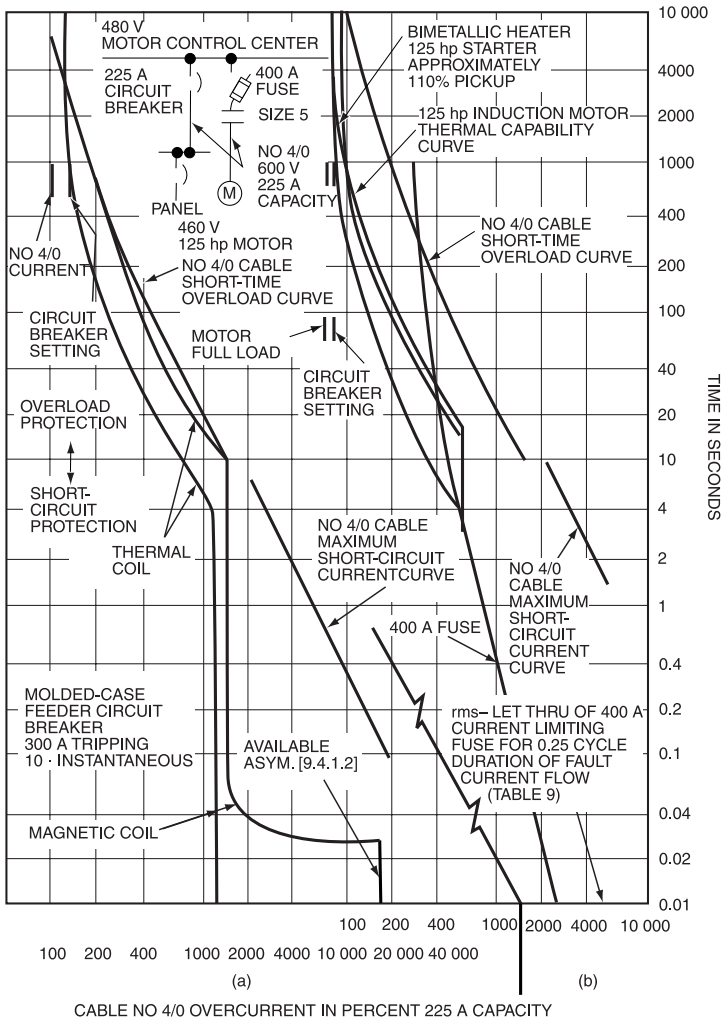

a) Thermal-magnetic circuit breakers
b) Heaters and fuses

Figure 9-7—Short-circuit and overload protection of 600 V cables

cables [see View (c) of Figure 9-8]. Problems arise in the protection of parallel cables unless individual devices are used for each cable.

c) A single or multiple cable feeder through a pull box or splice joint, or with taps, should be protected from the maximum short-circuit current caused by a fault on the tapped cables or end section of spliced cable. A cable fault requires the replacement of only the faulted cable section [see View (d) and View (f) of Figure 9-8].

d) Multiple-feeder circuits should be protected in a similar manner to each individual circuit [see View (g) of Figure 9-8].

Copyright © 2001 IEEE. All rights reserved.

Copyright The Institute of Electrical and Electronics Engineers, Inc.
Provided by IHS under license with IEEE
No reproduction or networking permitted without license from IHS
Not for Resale

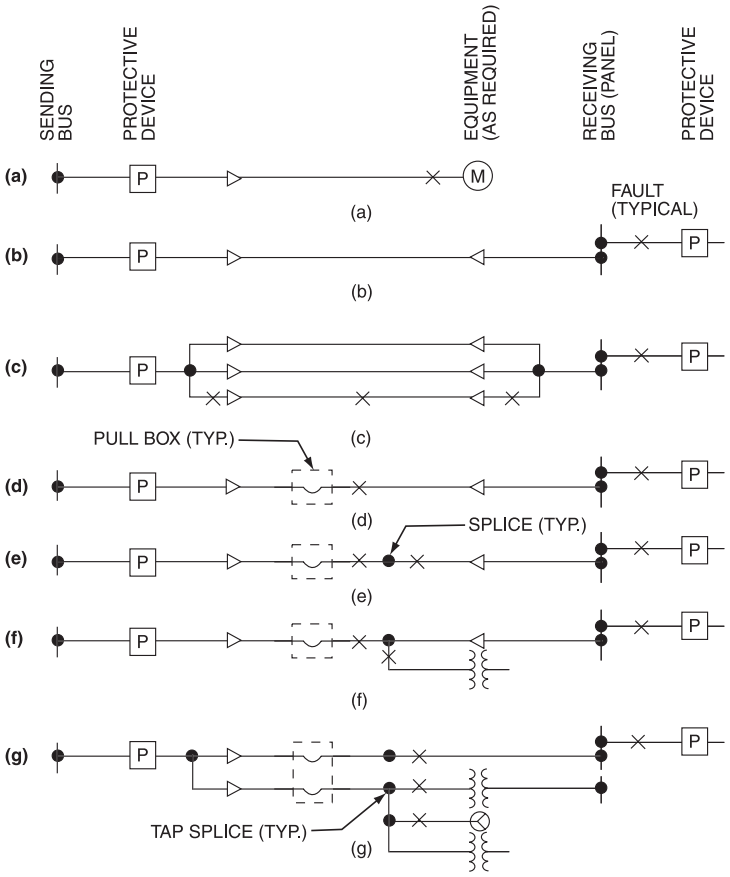

a) Single-cable feeder or utilization equipment
b) Single-cable feeder to panel
c) Multiple-cable feeder to panel
d) Single-cable feeder with pull box
e) Single-cable feeder with pull box and splice
f) Single-cable feeder with pull box and tap
g) Multiple-cable feeder with pull box and taps

Figure 9-8—Application of protective devices

9.4.4.2 Protection and coordination

The protective device should be selected and coordinated to give the cable sufficient short-circuit protection. This process can be done easily by plotting the TCC curves of the protected cable and the protective device on the same log-log graph paper. The TCC curve of the protective device should always be below and to the left of the maximum short-circuit current-time curve (see Figure 9-2 and Figure 9-3) of the protected cable. Figure 9-5 through Figure 9-9 illustrate that a # 4/0 copper insulated cable may be protected by various protective devices as follows**:**

Copyright © 2001 IEEE. All rights reserved.

Copyright The Institute of Electrical and Electronics Engineers, Inc.
Provided by IHS under license with IEEE
No reproduction or networking permitted without license from IHS
Not for Resale

— A 5 kV # 4/0 feeder is protected by a current-limiting fuse [see View (a) of Figure 9-5] or a Device 50/51 or Device 49/50 relay [see View (b) of Figure 9-5].

— A 600 V # 4/0 feeder is protected by instantaneous tripping [see View (a) of Figure 9-6], by short-time tripping [see View (a) of Figure 9-6], or by an instantaneous MCCB [see View (a) of Figure 9-7].

— A 600 V # 4/0 motor circuit is protected by a 400 A current-limiting fuse [see View (a) of Figure 9-7].

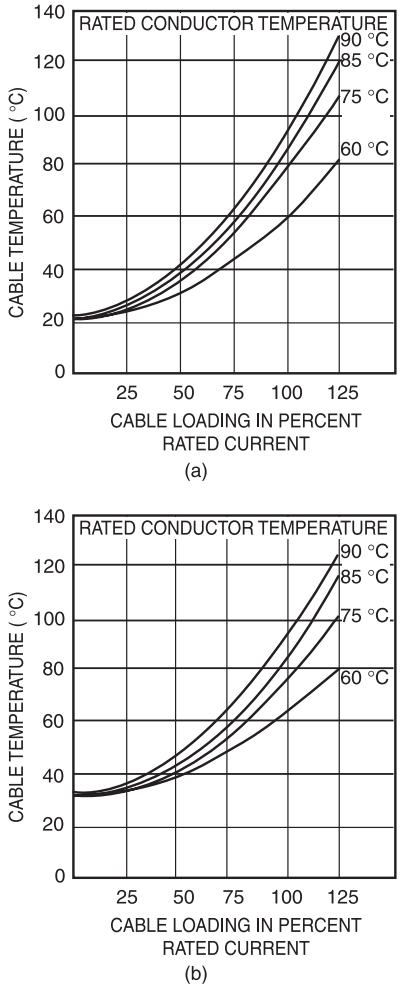

a) Ambient temperature at 20 ˚C
b) Ambient temperature at 30 ˚C

Figure 9-9—Cable loading and temperature rise

Special consideration is required whenever equipment-grounding conductors are sized smaller than the phase conductors because the overcurrent device can be several sizes larger

Copyright © 2001 IEEE. All rights reserved.

--`,,`,,`-`-`,,`,,`,`,,`---

Copyright The Institute of Electrical and Electronics Engineers, Inc.
Provided by IHS under license with IEEE
No reproduction or networking permitted without license from IHS
Not for Resale

than the equipment-grounding conductor, making it more difficult to protect. Examples of short-circuit protection are given in 9.4.4.2.1 and 9.4.4.2.2.

9.4.4.2.1 Example 1

Figure 9-10 presents a one-line diagram for Example 1.

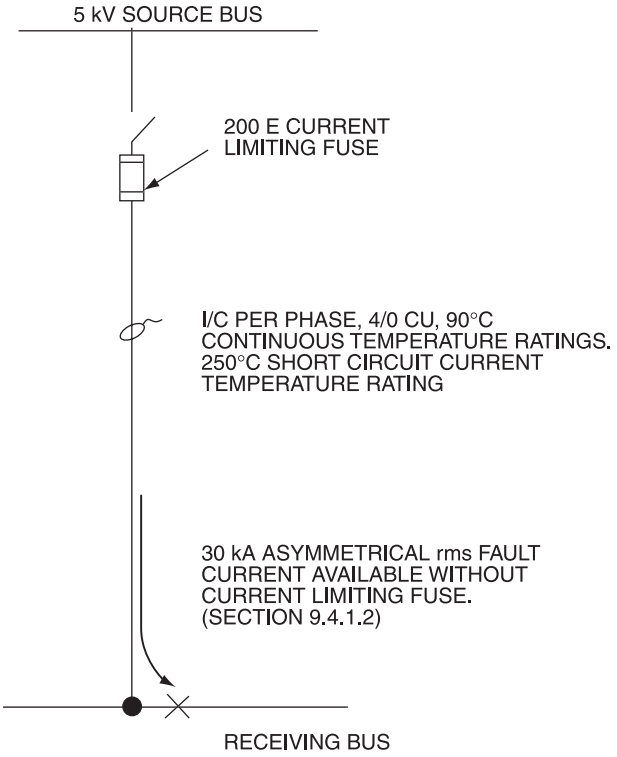

Figure 9-10—One-line diagram for Example 1

1) Find rms let-through current of the current-limiting fuse.

   Entering the let-through curve of the current-limiting fuse at 30 kA, and using the up, over, and down method the rms let-through current is found to be 12 kA (see Figure 9-11). Some manufacturers use symmetrical available short circuit (SCA). The manufacturer's instructions should be followed for use of let-through curves.

2) Find the short-circuit capability of the 4/0 copper conductor.

   In this example, assume that the initial operating temperature is the 90 ˚C continuous rating of the cable. The reason for this conservative assumption is that the initial operating temperature is a function of not only the loading, but also the ambient temperature. Therefore, determining the actual operating temperature is not always easy.

Copyright © 2001 IEEE. All rights reserved.

Copyright The Institute of Electrical and Electronics Engineers, Inc.
Provided by IHS under license with IEEE
No reproduction or networking permitted without license from IHS
Not for Resale

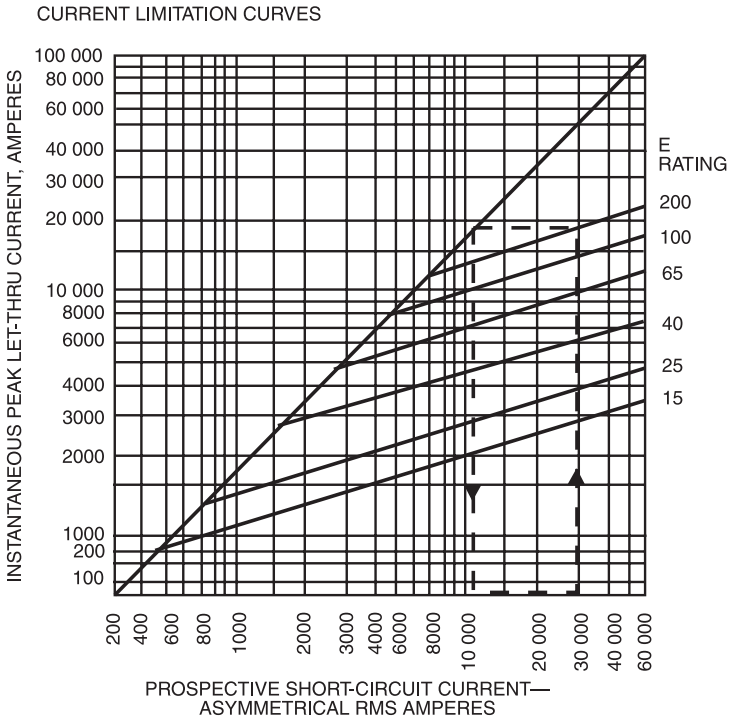

Figure 9-11—Current-limiting fuse let-through for use with Example 1

Entering Figure 9-4 with an initial temperature of 90 ˚C and a maximum short-circuit temperature of 250 ˚C, K_t is found to be 0.925. (See 9.4.2.5 for additional information on the use of Figure 9-4.)

The virtual available fault current should be found for use with Figure 9-2. Virtual available fault current is defined in 9.4.2.5 as the product of the actual available fault current and K_t. In this example, the actual available fault current is reduced to 12 kA because of the current-limiting effect of the 200E current-limiting fuse. Therefore,

$$\text{virtual available fault current} = K_t \times 12\ \text{kA}$$
$$= 0.925 \times 12\ \text{kA}$$
$$= 11.1\ \text{kA}$$

Entering Figure 9-2 with the virtual fault current of 11.1 kA, the 4/0 cable is found to safely carry 11.1 kA for approximately 100 cycles. Referring to Table 9-3a through Table 9-3e, a medium-voltage current-limiting fuse operating in the current-limiting range is found to clear a fault in 0.25 cycles. Therefore, the cable is well protected from short-circuit damage.

3) Plot cable short-circuit thermal limit curve on a coordination plot.

The short-circuit thermal limit curve for this example is constructed by shifting the 4/0 copper damage curve of Figure 9-2 by a current factor of $1/K_t$ and plotting points

Copyright © 2001 IEEE. All rights reserved.

Copyright The Institute of Electrical and Electronics Engineers, Inc.
Provided by IHS under license with IEEE
No reproduction or networking permitted without license from IHS
Not for Resale

from the shifted curve of Figure 9-2 on to the protection plot (d) in Figure 9-12. An example of curve shifting is given in Figure 9-13.

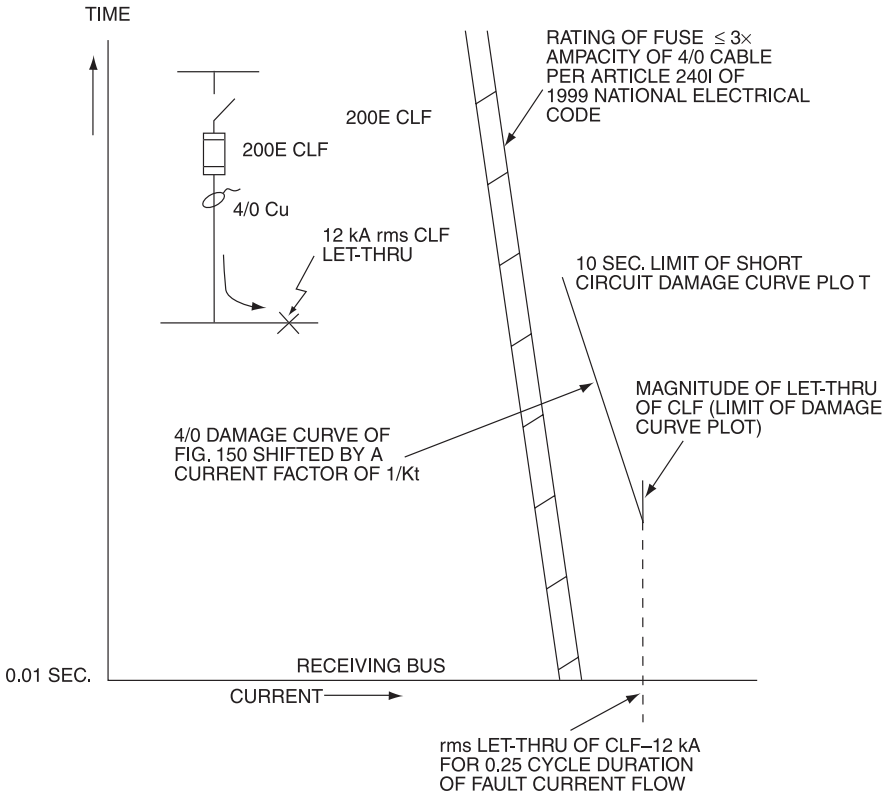

Figure 9-12—Short-circuit protection plot for Example 1

9.4.4.2.2 Example 2

Figure 9-14 presents a one-line diagram for Example 2.

1) Find the equivalent rms value of the fault current flowing over the time required to clear fault.

   From 9.4.1.2, the subtransient current is assumed to flow over the time required for a medium-voltage circuit breaker and instantaneous relay to clear the fault. From Figure 9-3 and Table 9-3a through Table 9-3e, the total clearing time of a 5 cycle circuit breaker and instantaneous relay is taken as 0.12 s. Therefore, 40 kA subtransient short-circuit current is assumed to flow for 0.12 s.

2) Find the short-circuit capability of the 500 kcmil aluminum conductors.

   The initial and final temperatures in Example 2 are the same as in Example 1. Therefore, K_t = 0.925. (See Example 1 for determination of K_t and the virtual available fault current.) In order to find the short-circuit capability of the 500 kcmil aluminum cable, Figure 9-3 should be entered with the virtual available fault current. Therefore,

Copyright © 2001 IEEE. All rights reserved.

Copyright The Institute of Electrical and Electronics Engineers, Inc.
Provided by IHS under license with IEEE
No reproduction or networking permitted without license from IHS
Not for Resale

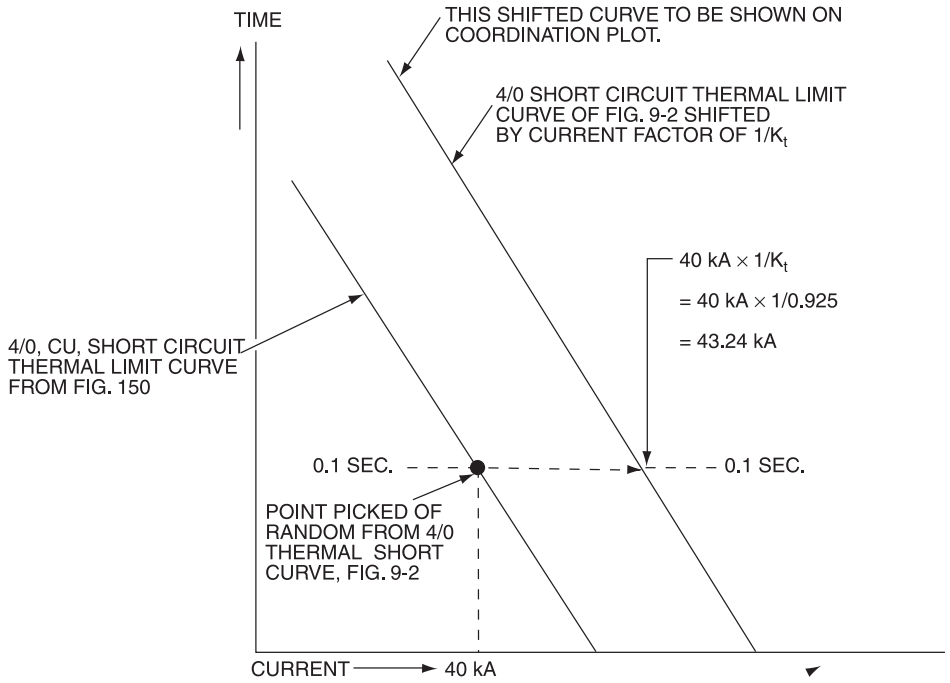

Figure 9-13—Shifting of thermal limit curve for use with coordination plot of Example 1

$$\text{virtual available fault current} = K_t \times 40\ \text{kA}$$
$$= 0.925 \times 40\ \text{kA}$$
$$= 37\ \text{kA}$$

Entering Figure 9-3 with 37 kA, a single conductor 500 kcmil aluminum cable is found to carry 37 kA for about 0.6 s. The fault is cleared in 0.12 s; therefore, the cable is well protected from short-circuit damage.

NOTE—Under short-circuit conditions, all fault current is assumed to flow through a single conductor when multiconductor feeders are utilized.

The short-circuit protection plot is shown in Figure 9-15. See Example 1 for the method of plotting the thermal limit curve on the short-circuit protection plot. The shifted short-circuit thermal limit curve should be plotted on the coordination plot between the current limits shown in Figure 9-15.

Copyright © 2001 IEEE. All rights reserved.

Copyright The Institute of Electrical and Electronics Engineers, Inc.
Provided by IHS under license with IEEE
No reproduction or networking permitted without license from IHS
Not for Resale

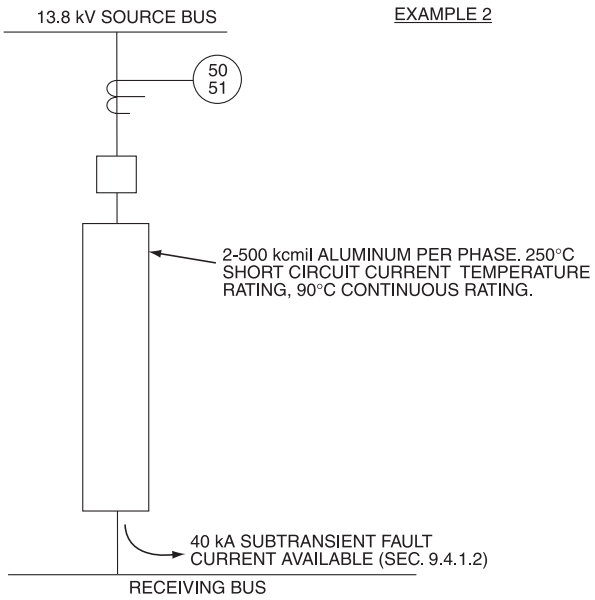

Figure 9-14—One-line diagram for Example 2

9.5 Overload protection of cables

Overload protection cannot be applied until the current-time capability of a cable is determined. Protective devices can then be selected to coordinate cable rating and load characteristics.

9.5.1 Normal current-carrying capacity

9.5.1.1 Heat flow and thermal resistance

Heat is generated in conductors by I^2R losses. It must flow outward through the cable insulation, sheath (if any), the air surrounding the cable, the raceway structure, and the surrounding earth in accordance with the following thermal principle (see AIEE Committee Report [B1]; Neher and McGrath [B11]; Shanklin and Buller [B13]; Wiseman[B14]):

$$\text{heat flow} = \frac{\text{difference between conductor and ambient temperature}}{\text{thermal resistance from materials}}$$

Copyright © 2001 IEEE. All rights reserved.

Copyright The Institute of Electrical and Electronics Engineers, Inc.
Provided by IHS under license with IEEE
No reproduction or networking permitted without license from IHS
Not for Resale

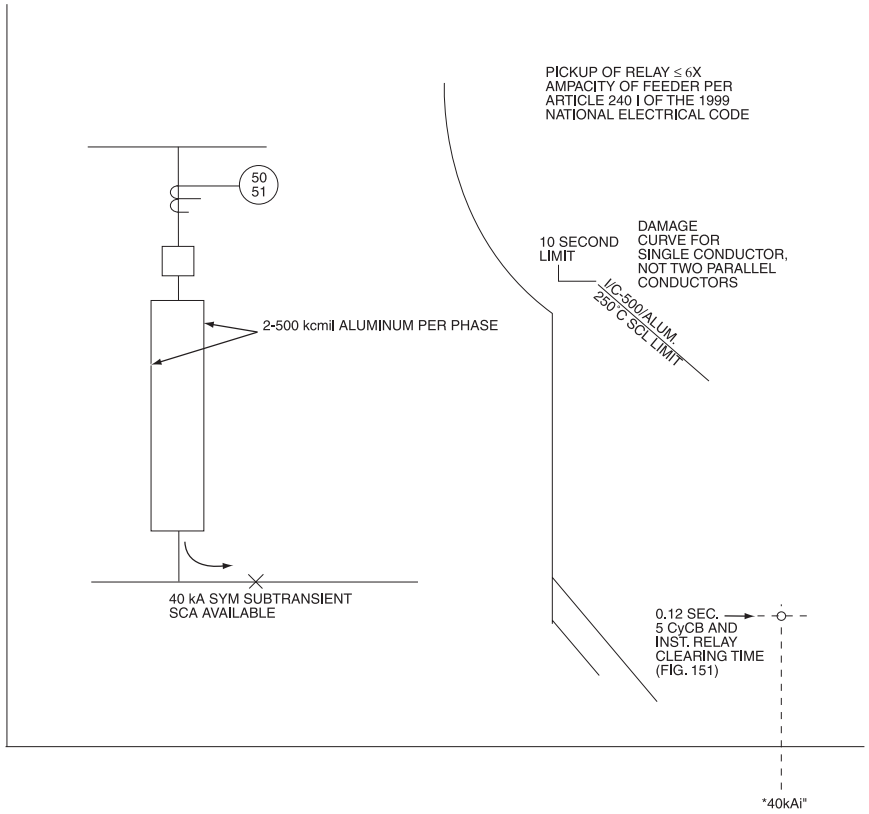

* *i*" is the equivalent value of the rms fault current over the duration of flow of the fault current (see 9.4.1.2)

Figure 9-15—Short-circuit protection plot for Example 2

The conductor temperature resulting from heat generated in the conductor varies with the load. The thermal resistance of the cable insulation may be estimated with a reasonable degree of accuracy, but the thermal resistance of the raceway structure and surrounding earth depends on the size of the raceway, the number of ducts, the number of power cables, the raceway structure material, the coverage of the underground duct, the type of soil, and the amount of moisture in the soil. These considerations are important in the selection of cables.

9.5.1.2 Ampacity

The ampacity of each cable is calculated on the basis of fundamental thermal laws incorporating specific conditions, including type of conductor, ac/dc resistance of the conductor, thermal resistance and dielectric losses of the insulation, thermal resistance and inductive ac losses of sheath and jacket, geometry of the cable, thermal resistance of the surrounding air or earth and duct or conduits, ambient temperature, and load factor. The ampacities of the cable under the jurisdiction of the NEC are tabulated in its current issue or amendments. The current-carrying capacity of cables under general operating conditions that

 Copyright © 2001 IEEE. All rights reserved.

--`,,`,,`-`-`,,`,,`,`,,`---

Copyright The Institute of Electrical and Electronics Engineers, Inc.
Provided by IHS under license with IEEE
No reproduction or networking permitted without license from IHS Not for Resale

may not come under the jurisdiction of the NEC are published by the Insulated Cable Engineers Association (ICEA). In its publications, the ICEA describes methods of calculation and tabulates the ampacity for 1 kV, 8 kV, 15 kV, and 25 kV cables (see ICEA S-19-81 or NEMA WC 3-1993, ICEA-61-402 or NEMA WC 5-1992, ICEA S-65-375 or NEMA WC 4-1988). The ampacities of specific types of cables are calculated and tabulated by manufacturers. Their methods of calculation generally conform to ICEA P-54-440 or NEMA WC 51-1986.

9.5.1.3 Temperature derating factor (TDF)

The ampacity of a cable is based on a set of physical and electrical conditions and a base ambient temperature defined as the no-load temperature of a cable, duct, or conduit. The base temperature generally used is 20 ˚C for underground installation, 30 ˚C for exposed conduits or trays, and 40 ˚C for medium-voltage cables.

TDFs for ambient temperatures and other than base temperatures are based on the maximum operating temperature of the cable and are proportional to the square root of the ratio of temperature rise, that is,

$$TDF = \frac{I_N}{I_M} = \frac{\text{current capacity at base ambient temperature}}{\text{current capacity at other ambient temperature}}$$

$$= \sqrt{\frac{T_N - T_a}{T_N - T_{a1}}}$$

$$= \sqrt{\frac{\text{temperature rise above base ambient temperature}}{\text{temperature rise above other ambient temperature}}}$$

9.5.1.4 Grouping derating factor

The no-load temperature of a cable in a group of loaded cables is higher than the base ambient temperature. To maintain the same maximum operating temperature, the current-carrying capacity of the cable should be derated by a factor of less than 1. Grouping derating factors are different for each installation and environment. Generally, they can be classified as follows:

— For cable in free air with maintained space
— For cable in free air without maintained space
— For cable in exposed conduits
— For cable in underground ducts

Copyright © 2001 IEEE. All rights reserved.

Copyright The Institute of Electrical and Electronics Engineers, Inc.
Provided by IHS under license with IEEE
No reproduction or networking permitted without license from IHS
Not for Resale

NEC Table 318-9 and Table 318-10 list fill limits for low-voltage cables in cable trays. NEC Article 318-11 covers the ampacity of low-voltage cables in trays. Article 318-12 and Article 318-13 cover ratings and fills of medium-voltage cables in cable trays.

9.5.1.5 Frequency and harmonic derating factors

Chapter 9 and Chapter 12 of IEEE Std 141-1993 contain information pertaining to the derating of cables as the result of harmonics and frequency considerations. (Six-pulse harmonic current distribution is covered in 9.8.2.3, and Figure 12-7 treats 400 Hz and 800 Hz systems.)

9.5.2 Overload capacity

9.5.2.1 Normal loading temperature

Cable manufacturers specify for their products the normal loading temperature, which results in the most economical and useful life of the cables. Based on the normal rate of deterioration, the insulation can be expected to have a useful life of about 20 years to 30 years. Normal loading temperature of a cable determines the cable's current-carrying capacity under given conditions. In regular service, rated loads or normal loading temperatures are reached only occasionally because cable sizes are generally selected conservatively in order to cover the uncertainties of load variations. Table 9-4 shows the maximum operating temperatures of various types of insulated cables.

9.5.2.2 Cable current and temperature

The temperature of a cable rises as the square of its current. The cable temperature for a given steady load may be expressed as a function of percent full load by the formula

$$T_X = T_a + (T_N - T_a)\,(I_X / I_N)^2$$

Figure 9-9 shows this relation for cables rated at normal loading temperatures of 60 °C, 75 °C, 85 °C, and 90 ˚C.

9.5.2.3 Intermediate and long-time zones

Taking into account the intermediate and long-time ranges from 10 s out to infinity, the definition of temperature versus current versus time is related to the heat dissipation capability of the installation relative to its heat generation plus the thermal inertias of all parts. The tolerable temperatures are related to the thermal degradation characteristics of the insulation. The thermal degradation severity is, however, related inversely to time. Therefore, a temperature safely reached during a fault could cause severe life reduction if it were maintained for even a few minutes. Lower temperatures, above the rated continuous operating temperature, can be tolerated for intermediate times.

 Copyright © 2001 IEEE. All rights reserved.

Copyright The Institute of Electrical and Electronics Engineers, Inc.
Provided by IHS under license with IEEE
No reproduction or networking permitted without license from IHS Not for Resale

Table 9-4—Typical normal and emergency loading of insulated cables

Insulation	Cable type	Normal voltage	Normal loading (°C)	Emergency loading (°C)
Thermoplastic	T, TW	600 V	60	85
	THW	600 V	75	90
	THH	600 V	90	105
	Polyethelene	0–15 kV	75	95
		>15 kV	75	90
Thermosetting	R, RW, RU	600 V	60	85
	XHHW	600 V	75	90
	RHW, RH-RW	0–2 kV	75	95
	Cross-linked polyethylene	5–15 kV	90	130
	Ethylene-propylene	5–15 kV	90	130
Varnished polyester		15 kV	85	105
Varnished cambric		0–5 kV 15 kV	85 77	102 85
Paper lead		15 kV	80	95
Silicone rubber		15 kV	125	150

The ability of a cable to dissipate heat is a factor of its surface area, while its ability to generate heat is a function of the conductor cross section, for a given current. Thus, the reduction of ampacity per unit cross-section area as the wire sizes increase tends to increase the permissive short-time current for these sizes relative to their ampacities. It may be seen in Figure 9-16 that the extension of the intermediate characteristic, on a constant I^2t basis, protects the smallest wire sizes and overprotects the largest sizes, as shown in Figure 9-16. Constant I^2t protection is readily available and is actually the most common; therefore, a simplification of protection systems is possible.

The continuous current, or ampacity, ratings of cable have been long established and pose no problems for protection. The greatest unknown in the cable thermal characteristic occurs in the intermediate time zone, or the transition from short-time to long-time or continuous state.

Copyright © 2001 IEEE. All rights reserved.

Copyright The Institute of Electrical and Electronics Engineers, Inc.
Provided by IHS under license with IEEE
No reproduction or networking permitted without license from IHS
Not for Resale

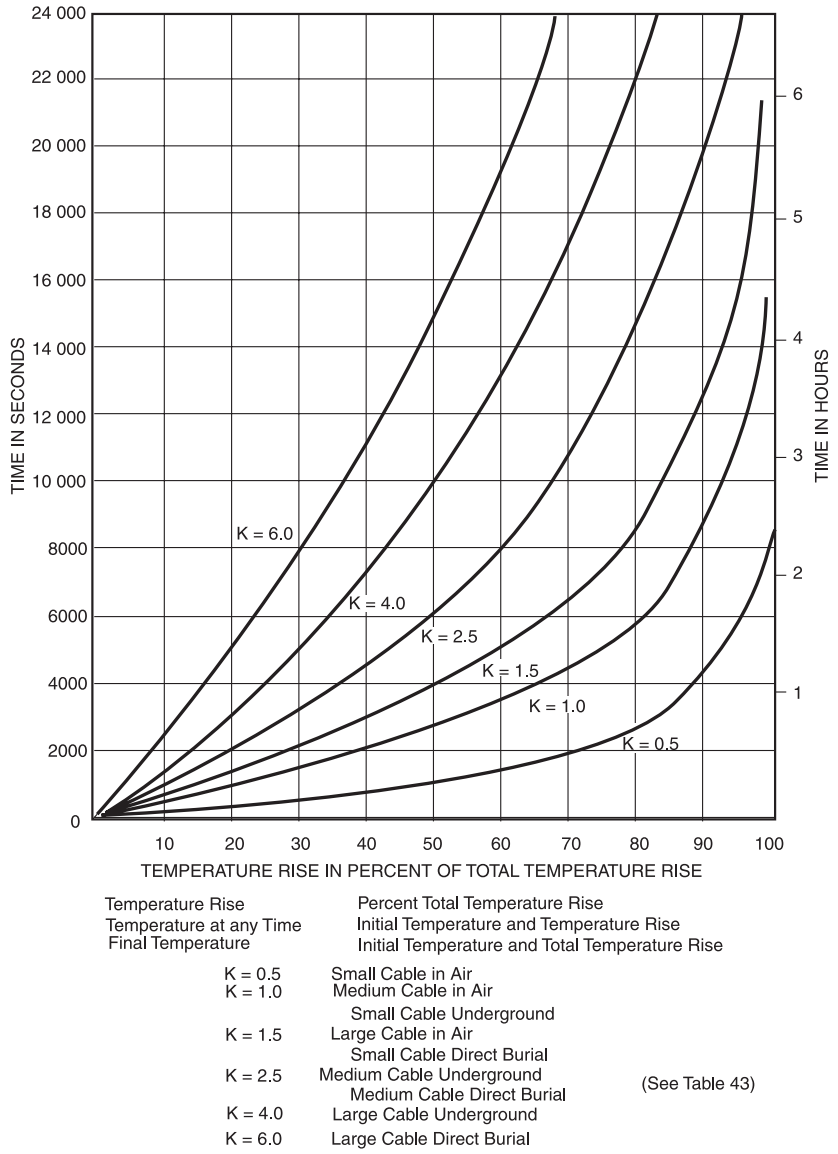

Figure 9-16—Rate of temperature rise due to current increase

9.5.2.4 Development of intermediate characteristics

Cable, with the thermal inertia of its own and of its surroundings, takes from 1 h to 6 h to change from initial to final temperature as the result of a current change. Consequently, overloads substantially greater than its continuous rating may be placed on a cable for this range of times.

Copyright © 2001 IEEE. All rights reserved.

Copyright The Institute of Electrical and Electronics Engineers, Inc.
Provided by IHS under license with IEEE
No reproduction or networking permitted without license from IHS
Not for Resale

Additionally, all cables except polyethylene (not cross-linked) withstand, for moderate periods, temperatures substantially greater than their rated operating temperatures. This is a change recently developed from work done within ICEA and published by that organization (see 9.9). For example, EPR and XLP cables have emergency ratings of 130 ˚C, based on maximum time per overload of 36 h, three such periods per year maximum, and an average of one such period per year over the life of the cable. Thermoplastic cables degrade in this marginal range by progressive evaporation of the plasticizer and can operate for several hours at the next higher grade operating temperature (90 ˚C for 75 ˚C rating, and so forth) with negligible loss of life. Therefore, emergency operating overloads may reasonably be applied to cables within the time and temperature ratings. This capability should be the basis of application of protection of the cables.

The complete relationship for determining intermediate overload rating is as follows:

$$\text{Percent overload capability} = \frac{I_E}{I_N}\% = \sqrt{\frac{\frac{T_E - T_O}{T_N - T_O} - \left(\frac{I_O}{I_N}\right)^2 (e^{-\theta K})}{1 - e^{-\theta K}}} \left(\frac{230 + T_N}{230 + T_E}\right) 100$$

where

I_E is emergency operating current rating,
I_N is normal current rating,
I_O is operating current prior to emergency,
T_E is conductor emergency operating temperature,
T_N is conductor normal operating temperature,
T_O is ambient temperature,
K is a constant, dependent on cable size and installation type (see Table 9-5),
230 is zero-resistance temperature value (234 for copper, 228 for aluminum),
e is base for natural logarithms.

Table 9-5—K factors for equations in 9.5.2.4

Cable size	Air		Underground duct	Direct buried
	No cond	In cond		
<#2	0.33	0.67	1.00	1.25
#2–#4/0	1.00	1.50	2.50	3.00
≥250 kcmil	1.50	2.50	4.00	6.00

If the cable has been operated at its rated current prior to the excursion, then $I_O / I_N = 1$ so the relation is simplified to:

Copyright © 2001 IEEE. All rights reserved.

Copyright The Institute of Electrical and Electronics Engineers, Inc.
Provided by IHS under license with IEEE
No reproduction or networking permitted without license from IHS
Not for Resale

$$\frac{I_E}{I_N}\% = \sqrt{\frac{\frac{T_E - T_O}{T_N - T_O} - e^{-\theta K}}{1 - e^{-\theta K}}\left(\frac{230 + T_N}{230 + T_E}\right)}100$$

This equation is the basic formula used in this chapter as representing the maximum safe capability of the cable.

While many medium-voltage cables are operated at substantially less than full rated capacity, most low-voltage cables are operated near their rated ampacity. Even for medium-voltage cable, full loading is occasionally impressed. Regardless of preloading, protection should be coordinated with cable characteristics, not loading. Therefore, data presented in this subclause are based on 100% preloading, by the preceding equation. Factors are developed for approximating the characteristic for lower preloadings. For such preloadings, the data presented in this subclause are even more conservative.

Intermediate zone characteristics of medium-voltage cables and 75 °C and 90 ˚C thermoplastic cables are tabulated in Table 9-6 with the characteristics of medium-voltage cable illustrated graphically in Figure 9-17a. These factors all apply to preloading at rated ampacity at 40 ˚C ambient temperature. For lower ambient temperatures and when cable ampacities have been increased to take this into account, the intermediate overload current percent should be reduced by the following factors for each degree decrease in ambient temperature below 40 ˚C:

Cable	Factor
EPR-XLP	0.004
THH	0.002
THW	0.0037

For preloading less than 100% of rating, emergency overload percentages can be increased by the following factors:

	Preloading		
	75%	80%	90%
All insulation types	1.33	1.25	1.11

NOTE—This may safely be done only for permanent preloadings of these percentages.

Copyright © 2001 IEEE. All rights reserved.

Copyright The Institute of Electrical and Electronics Engineers, Inc.
Provided by IHS under license with IEEE
No reproduction or networking permitted without license from IHS
Not for Resale

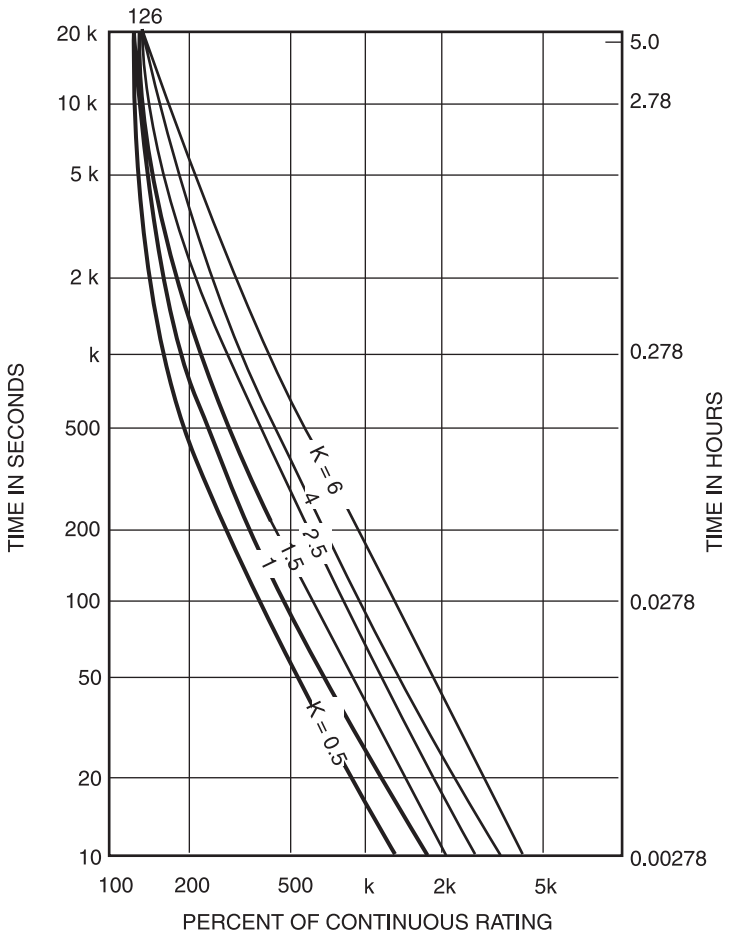

Figure 9-17a—Emergency overload current percent of continuous rating, EPR-XLP cable, insulated, 40 ˚C ambient temperature

Intermediate time-current overload curves such as in Figure 9-17b can also be determined by use of Table 9-6 and Table 9-7. An example of the use of the tables follows:

Example

Determine the intermediate time-current emergency overload curve for three, single-conductor, #2 AWG copper, 5 kV EPR cables in conduit in air in an ambient temperature of 40 ˚C.

Copyright © 2001 IEEE. All rights reserved.

Copyright The Institute of Electrical and Electronics Engineers, Inc.
Provided by IHS under license with IEEE
No reproduction or networking permitted without license from IHS
Not for Resale

Table 9-6—Emergency overload current I_E, percent of continuous rating at 40 ˚C ambient temperature

Time		Values of K					
s	h	0.5	1	1.5	2.5	4	6
		EPR-XLP	T_N = 90 °C		T_E = 130 °C		
10	0.00278	1136	1602	1963	2533	3200	3916
100	0.0278	374	518	629	807	1018	1244
1000	0.278	160	195	226	277	339	407
10 000	2.78	126	128	132	140	152	168
18 000	5.0	126	127	128	131	137	147
		THH	T_N = 90 °C		T_E = 105 °C		
10	0.00278	725	1020	1248	1610	2033	2487
100	0.0278	250	338	407	518	651	794
1000	0.278	127	146	163	192	229	270
10 000	2.78	111	112	114	118	124	131
18 000	5.0	111	111	112	113	116	121
		THW	T_N = 75 °C		T_E = 95 °C		
10	0.00278	987	1390	1703	2197	2275	3396
100	0.0278	329	452	548	702	884	1080
1000	0.278	148	117	202	245	298	357
10 000	2.78	121	123	125	132	142	154
18 000	5.0	121	121	122	125	130	137

For #2 AWG EPR cables in conduit in air, the K factor is 1.5 (see Table 9-5). NEC Table 310-73 lists an ampacity of 130 A for #2 AWG, 5 kV copper cables in conduit in air. Incorporation of these data into Table 9-6 is tabulated below:

9.5.2.5 Direct buried cables

With direct buried cables, the conductor operating temperature needs to be kept at no more than 65 ˚C to keep the outside surface temperature below 60 ˚C, unless the supply of moisture in the soil is ample. For higher surface temperature, moisture in the normal soil migrates away from the cable, raising the soil thermal resistivity and resulting in overtemperature of the cables. Therefore, for intermediate emergency overload, a maximum conductor temperature of 80 ˚C has been selected as suitable to preserve this thermal resistivity condition for the

Copyright © 2001 IEEE. All rights reserved.

Copyright The Institute of Electrical and Electronics Engineers, Inc.
Provided by IHS under license with IEEE
No reproduction or networking permitted without license from IHS
Not for Resale

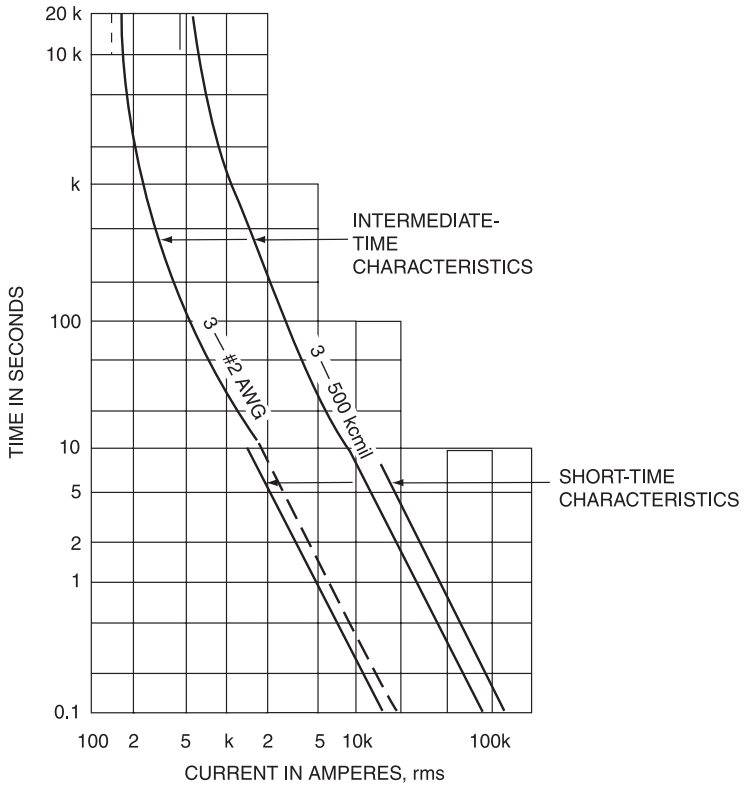

Figure 9-17b—Ratings of small and large cable in conduit in air, intermediate and short-time, EPR and XLP

Table 9-7—Emergency overload current I_K, percent of continuous rating at 20 ˚C ambient temperature, direct buried, T_N = 65 ˚C, T_E = 80 ˚C

Time		Values of K		
(s)	(h)	1.5	3	6
10	0.00278	1313	1853	2616
100	0.0278	427	594	834
1000	0.278	168	213	282
10 000	2.78	115	121	134
18 000	5.0	113	116	123

Copyright © 2001 IEEE. All rights reserved.

--`,,`-`-`,,`,,`,`,,`---
Copyright The Institute of Electrical and Electronics Engineers, Inc.
Provided by IHS under license with IEEE
No reproduction or networking permitted without license from IHS
Not for Resale

From Table 9-6		
Percent of continuous-current capability for EPR-XPL at K = 1.5	**Time (s)**	**Allowable emergency overload amperes based on 130 A continuous-current rating (40 °C ambient temperature)**
1963	10	2552
629	100	818
226	1000	294
132	10 000	172
128	18 000	166

times involved. Consequently, the tables and curves shown for air and duct use are not applicable. Table 9-7 lists values applicable for direct buried installations. The short-time ratings for 250 ˚C are still applicable for this service because the times involved do not cause moisture migration.

9.5.2.6 Additional observations

The absolute values of the short-time temperature and the emergency operating loading temperature are not precise. They are values selected and proven to apply to the respective cable types without undue deterioration. For example, tests by Georgia Power Company [B10] of fault conditions imposed on medium-voltage cable showed no appreciable degradation even where the nominal short-time temperature was exceeded by about 50 ˚C. Likewise, the 130 ˚C emergency operating temperature has an applicable time value of 36 h for no undue deterioration. Deducing that this insulation can tolerate a somewhat higher temperature (e.g., 150 °C to 175 ˚C) for a time shorter than 36 h is only logical. This condition is undoubtedly true, but its inclusion in calculations would complicate them unduly.

A compensating factor exists in the intermediate range. An overcurrent of from 10 s to 100 s range, for example, would not have sufficient time to cause heat to be dissipated by earth that was in contact with the cable. Times of over 100 s, and certainly 1000 s, would see this region of the heat dissipation chain contributing to the action. Therefore, attributing the surrounding medium's heat dissipation characteristics in the shorter portion of the intermediate zone is illogical. Yet, a rigorous mathematical consideration would again substantially complicate the analysis.

Therefore, a trade-off exists: the ability of insulation to withstand higher than nominal operating temperatures for shorter periods is considered adequate compensation for the lack of contribution of the surrounding media in absorbing heat during the shorter portion of the intermediate zone. Without this convention, establishing both varying allowable temperatures

 Copyright © 2001 IEEE. All rights reserved.

Copyright The Institute of Electrical and Electronics Engineers, Inc.
Provided by IHS under license with IEEE
No reproduction or networking permitted without license from IHS Not for Resale

and K factors over the whole range of the intermediate zone would be necessary, and such calculations would be an undue burden when the present method yields satisfactory results.

Even the 36 h nominal limit for 130 ˚C operation for medium-voltage cable does not mean that lower operating temperatures cannot be tolerated for longer periods. For example, to illustrate the nature of the situation, 120 ˚C might be tolerated for 75 h, 110 ˚C for 150 h, and 100 ˚C for 500 h. Setting a continuous protective device to trip at precisely the 80 ˚C ampacity is almost certain to result in nuisance tripping on power surges. Therefore, the device would be set at, in all likelihood, something like 110% of rated cable ampacity, or an operating temperature of 100 ˚C. Visual or similar monitoring would be used to keep the continuous loading of a cable from exceeding its rated ampacity for long periods of time.

9.5.3 Overload protective devices

9.5.3.1 TCCs

The time-current overload characteristics (see Figure 9-17a and Figure 9-17b) of the cables differ from the short-circuit current characteristic (see Figure 9-2 and Figure 9-3). The overloads can be sustained for a much longer time than the short-circuit current, but the principle of protection is the same. A protective device provides maximum protection if its TCC closely matches the TCC of the cable overload characteristic. Thermal overcurrent relays generally offer better protection than overcurrent relays because thermal relays operate on a long-time basis and their response time is proportional to the temperature of the cable or the square of its current.

9.5.3.2 Overcurrent relays

Very inverse or extremely inverse relays of the induction disk and solid-state types provide better protection than moderately inverse relays. However, all induction overcurrent relays can be set to afford the cables sufficient protection. View (b) of Figure 9-5 shows the cable protection given by overcurrent relays (Device 51) and by thermal overcurrent relays (Device 49).

9.5.3.3 Thermal overcurrent relays or bimetallic devices

Thermal overload relays or bimetallic devices more closely resemble the cable's heating characteristic, but they are generally not as accurate as an overcurrent relay. View (b) of Figure 9-5 shows the cable protection given by thermal overcurrent relays (Device 49); and View (b) of Figure 9-7, protection given by bimetallic heaters.

9.5.3.4 Fuses

Where selected to match the ampacity of the cable, fuses provide excellent protection against high-magnitude short circuits. Additionally, at 600 V and below, fuses provide protection for overloads or low-current faults. Figure 9-5 and Figure 9-7 illustrate these applications. Figure 9-7 illustrates a combination of fast-acting 400 A fuse and motor overload relays. Had

Copyright © 2001 IEEE. All rights reserved.

--`,,`-`-`,,`,,`,`,,`---

Copyright The Institute of Electrical and Electronics Engineers, Inc.
Provided by IHS under license with IEEE
No reproduction or networking permitted without license from IHS
Not for Resale

a 225 A dual-element fuse (selected for the ampacity) been used, the fuse alone would have provided overload protection.

Detailed treatment of fuses is given in Chapter 5 of this recommended practice, in Chapter 5 of IEEE Std 141-1993, in Chapter 5 of IEEE Std 241-1990, and in IEEE Committee Report JH 2112-1.

9.5.3.5 Magnetic trip device or static sensor on 480 V switchgear

The magnetic trip devices have a wide range of tripping tolerances. Their long-time characteristics match the cable overload curves for almost three quarters of an hour (see Figure 9-6). Static trip devices provide better protection than magnetic direct-acting trip devices. However, for safe cable protection, the long-time pickup should be set below the heating curves of the cable by sizing the cable with normal loading current slightly greater than the trip device pickup current.

9.5.3.6 Thermal magnetic trip devices on MCCBs

The characteristics of the thermal magnetic trip devices resemble the characteristics of magnetic trip devices. They do not provide adequate thermal protection to cables during the long-term overloads [see View (a) in Figure 9-7]. The cable should be selected and protected in the same manner as described in 9.5.3.5.

9.5.4 Application of overload protective devices

9.5.4.1 Feeder circuits to panels

A single- or multiple-cable feeder leading to a panel with or without an intermediate pull box should be protected from excessive overload by a thermal overcurrent device. If there are splice joints and a different type of installation, such as from an exposed conduit to an underground duct, the cable segment with the lowest current-carrying capacity should be used as the basis for protection [see View (e) of Figure 9-8].

A single-cable feeder with taps to individual panels cannot be protected from excessive overload by a single protective device at the sending end, unless the cable is oversized. Therefore, overload protection of the tap cable should be provided at the receiving end. The protection should be based on the current-carrying capacity of the cable supplying power to the panel [see View (f) of Figure 9-8]. A multiple-cable feeder with only a common protective device does not have overload protection for each cable feeder. In this case, overload protection should be provided at the receiving end [see View (g) of Figure 9-8]. See NEC Article 240-21.

9.5.4.2 Feeder circuit to transformers

A feeder circuit to one or more transformers should be protected in a similar manner as for feeder circuits to the panels. However, a protective device selected and sized for transformer protection also provides protection for the primary cable because the cables sized for a full

 Copyright © 2001 IEEE. All rights reserved.

Copyright The Institute of Electrical and Electronics Engineers, Inc.
Provided by IHS under license with IEEE
No reproduction or networking permitted without license from IHS Not for Resale

transformer load have higher overload capability than the transformer. [See View (a) of Figure 9-5 for a comparison of the time-current curves between cable and transformer.]

9.5.4.3 Cable circuit to motors

A cable circuit to one or more motors should be protected in a similar manner as for cable circuits to panels. Again, a protective device selected and sized for motor overload protection also provides cable protection because the cable has a higher overload capability than the motor [see View (b) of Figure 9-7].

9.5.4.4 Protection and coordination

Protective devices should be selected and cables sized for coordinated protection from short-time overload. The method of coordination is the same as for the short-circuit protection, that is, the time-current curve of the protective device should be below and to the left of the cable overload curve (see Figure 9-17a and Figure 9-17b). Figure 9-5 through Figure 9-7 illustrate the protective characteristics of relays and devices commonly used in cable circuits for overload protection.

9.6 Physical protection of cables

Cables require protection against physical damage as well as from electrical overload and short-circuit conditions. The physical conditions that should be considered are divided into three categories: mechanical hazards, adverse ambient conditions (excluding high temperatures), and attack by foreign elements. Cables can also be damaged (and frequently are) by improper handling during installation.

9.6.1 Mechanical hazards

Electric cables can be damaged mechanically by vehicles, falling objects, misdirected excavation, or failure of adjacent circuits. Mechanical protection should serve the dual function of protecting cables and limiting the spread of damage in the event of an electrical failure.

Isolation is one of the most effective forms of mechanical protection. Conduit, tray, and duct systems are more effective if they are physically out of the way of probable accidents. A highly elevated cable is adequately protected against vehicles and falling objects. Where conduits or other enclosures must be run adjacent to roadways, large steel or concrete barriers provide adequate protection.

9.6.2 Exposed raceways

The most popular form of mechanical cable protection is the use of metallic conduits or raceways. In addition to the electrical benefits of the grounded enclosure, the metallic conduit or raceway protects the cable against most types of mechanical damage. Cable trays are also common because they are economical and convenient for power and control cable systems. Cables may have increased protection from mechanical damage through the use of solid

Copyright © 2001 IEEE. All rights reserved.

--`,,`-`-`,,`,,`,`,,`---
Copyright The Institute of Electrical and Electronics Engineers, Inc.
Provided by IHS under license with IEEE
No reproduction or networking permitted without license from IHS
Not for Resale

metal tray covers and metal barriers in the trays between different circuits. Covers incur derating, however.

9.6.3 Underground systems

Underground ducts or embedded conduits provide similar mechanical protection. Ducts should be encased in concrete for best results. Where they are subject to heavy traffic or poor soil conditions, reinforcement of the concrete envelope is desirable. Because excavation near underground cable runs is always a problem, coloring the concrete around electrical ducts is advisable. The addition of approximately 1.5 kg of iron oxide per sack of cement provides a readily identifiable red color, which is meant as a warning to anyone digging into the run. The color is effective even in mud or similarly colored soil because it is conspicuous as soon as the concrete is chipped.

9.6.4 Direct buried cables

The direct buried cables should be carefully routed to minimize damage from traffic and digging and to avoid areas where plant expansion is predicted. Cables should be covered with some type of special material, such as a brightly colored plastic strip or a wooden or concrete plank. Warning signs should also be placed above ground at frequent intervals along the cable route. Additionally, plant drawings accurately locating the buried cable run may also prevent accidental dig-ins.

9.6.5 Aerial cable systems

Insulated cables on a messenger require special care. These systems are especially susceptible to installation damage. They should be located away from possible interference from portable cranes and support systems and protected from vehicle damage. Space or solid barriers provide reasonable protection for supports, whereas warning signs and nonelectric cables strung between electric cables and roadways offer protection against cranes and high vehicles.

9.6.6 Portable cables

Exposed portable cables require extra consideration from a mechanical standpoint. Because they must remain portable, enclosures are not practical. The proper selection of a portable cable type provides one of the best methods of protection. It should be selected to match operating conditions. Moisture resistance, resistance to cutting or abrasion, and type of armor are all considerations that influence cable life. However, even the best cables require mechanical consideration in service. They should not be subjected to vehicular or steel-tired hand-pushed traffic. Means should be arranged to allow traffic to pass over or under cables without contacting the cable. Care should also be taken in moving portable cables to avoid snags or cuts. They should be located where they are clear of welding and where falling objects are not a serious hazard. A conspicuous color on the jacket is beneficial in warning personnel of the location of a portable cable.

Copyright © 2001 IEEE. All rights reserved.

Copyright The Institute of Electrical and Electronics Engineers, Inc.
Provided by IHS under license with IEEE
No reproduction or networking permitted without license from IHS Not for Resale

9.6.7 Adverse ambient conditions

In 9.4 and 9.5, protection from overtemperature caused by short-circuit current or overload conditions has been discussed. Other ambient conditions, however, cannot be protected by overcurrent devices or by compensation for elevated ambient temperatures.

In any type of cable enclosure, water or dampness should be considered, although underground installations are the most susceptible. Repeated cycles of high and low temperature, combined with humid air, can fill conduits or enclosures with water produced by "breathing" and condensation. Stopping the breathing is almost impossible, but suitable drains at low points will remove water as it collects. Preventing immersion is always desirable, and duct systems and other raceways should be designed to slope so that the water can be removed.

Many of the available cable insulations are highly resistant to moisture; but where moisture is expected, extra care should be taken in selecting the insulation appropriate for that application.

In industrial plants, the moisture problem may be amplified by the presence of various chemicals, and the possibility of chemical contamination should be considered for cables run through any process facility. Chemical seepage into ground water, or direct contact due to process misoperation, may result in chemicals coming into contact with a cable system. The enclosure, insulation, and conductor should all be tested to determine the effect of possible chemical contaminants and selected to be most resistant to such chemicals. Where chemical contamination is severe, rerouting of the system should be considered. Acids and organic solvents are especially harmful.

Fires, which may result directly from cable failure or from unrelated external conditions, can cripple almost any cable system. Protecting against damage to one cable caused by the failure of an adjacent cable is easier than protecting against damage caused by an external fire. The enclosure of individual power circuits and fireproof coatings or tapes are the most effective means of limiting this type of damage because it is unusual for a cable with proper electrical protection to burn through its individual conduit or raceway.

Pullboxes, pits, and manholes used as pulling points or sorting areas are the greatest fire hazards with respect to fault conditions; and elimination of the common enclosure for several circuits, where possible, offers the best protection.

The combustion of materials adjacent to a cable system is a difficult condition against which to protect. The obvious solution is to remove all combustibles from the vicinity of the cables. As much as possible, this practice should be undertaken. Critical circuits should be separated to lessen the extent of fire damage, and the use of multiple circuits following different routes can assure continuous service. Higher temperature-rated cable types might be considered for increased safe shut-down time.

In all cases the selection of proper enclosures or coverings can minimize fire damage; however, the method chosen should be based upon the possible hazards involved. For underground installation, heavier enclosures, higher racks, and overinsulation using materials

Copyright © 2001 IEEE. All rights reserved.

--`,,`-`-`,,`,,`,`,,`---

Copyright The Institute of Electrical and Electronics Engineers, Inc.
Provided by IHS under license with IEEE
No reproduction or networking permitted without license from IHS Not for Resale

with greater temperature resistance are all considerations; and under severe conditions, the use of mineral insulation (MI) cables may help.

9.6.8 Attack by foreign elements

In some environments, cable systems may be subject to attack by animals, insects, plants, and fungi, all of which may possibly cause cable failure. Small, gnawing animals have been known to chew through cables, and insects and small animals such as lizards and snakes can cause difficulties at terminations where they or their nests may bridge the gap between terminals. The use of more resistant enclosures, armor, or indigestible cable materials are effective protection.

In tropical atmospheres, fungi may grow on cable and wire systems. The creation of a dry atmosphere is an effective deterrent, although fungus-resistant coatings and insulations are protection methods most often applied.

9.7 Code requirements for cable protection

Codes and regulations are established to control the installation and operation of electric cable systems. Although many different codes and regulations may be applied, depending on governmental, geographical, or company requirements, the NEC is most often quoted; and portions of it are mandatory by the Occupational Safety and Health Administration's (OSHA) Part 1910.302-1910.309. The engineer is responsible for determining which codes are applicable to each project. The discussion in this subclause is limited to the NEC, which is principally concerned with overtemperature (or overcurrent), short-circuit, and mechanical protection in regard to cable applications.

Overcurrent protection is covered in NEC Article 240 under the provision requiring all conductors to be protected in accordance with their current-carrying capacities. In general, the current-carrying capacity of cables is determined from the tables contained in Article 310, which concerns the installation of conductors.

Protection of feeders or conductors rated 600 V or less should be in accordance with their current-carrying capacities as given in NEC tables, except where the load includes motors. In such cases, the protective device may be set higher than the continuous capability of the conductor (to permit coordination on faults or starting the largest connected motor while the other loads are operating at full capacity) because running overload protection is provided by the collective action of the overload devices in the individual load circuits. Where protective devices rated 800 A or less are applied that do not have adjustable settings that correspond to the allowable current-carrying capacity of the conductor, the next higher device rating may be used. Other exceptions are allowed in NEC Article 240-3, such as capacitor and welder circuits and transformer secondary conductors.

Feeders rated more than 600 V are required to have short-circuit protection, which may be provided by a fuse rated at no more than 300% of the conductor ampacity or by a circuit breaker set to trip at no more than 600% of the conductor ampacity. Although not required by

 Copyright © 2001 IEEE. All rights reserved.

--`,,`-`-`,,`,,`,`,,`---

Copyright The Institute of Electrical and Electronics Engineers, Inc.
Provided by IHS under license with IEEE
No reproduction or networking permitted without license from IHS Not for Resale

the NEC, improved protection of these circuits is possible when running overload protection is also provided in accordance with the conductor ampacity.

Motor feeders receive particular attention in NEC Article 430. In general, Article 430 governs the selection of the current-carrying capacity of cables used for motor circuits. After the cable size is selected in accordance with this article, the actual protection is applied in accordance with Article 240.

NOTE—NEC Article 430 provides rules for the overcurrent protection of the motors themselves. Although the discussion in this chapter concerns only cables, motor protective devices may also provide the required cable protection.

NEC Article 310 ensures that cables are adequate for their service applications by specifying currents that may be carried by particular conductors with specific insulation classifications and under specific governing conditions. It also requires the selection of cable materials that are suitable for application conditions, including moisture, chemicals, and nonstandard temperatures. This article permits the use of multiple cables if means are provided to ensure the equal division of current, and if essentially identical conditions and materials are used for each of the parallel paths. Article 310 also covers installation methods designed to ensure the installation of cables without damage and with adequate working space.

NRC Article 300 specifies wiring methods and protection required for cables subject to physical damage.

These articles pertain specifically to cable protection, but are not the only provisions of the NEC that deal with the subject. Any specific cable or cable system comes under the provisions of one or more sections of the NEC, and responsible parties should ensure that the protective methods they have selected comply with both the relevant provisions and any special requirements that they may impose.

9.8 Busway protection

Due to their economies, convenience, and excellent electrical characteristics, 600 V busway systems have gradually assumed a role of greater importance in today's industrial and commercial buildings. Because numerous cable runs can be consolidated into a single large bus duct run, the reliability of duct runs has become a critical factor in building design. Today's busways are well designed for their intended use. However, because of the critical nature of their purpose, they must not only suffer fewer outages, they must also be returned to service with a minimum of downtime. Thus, while the duct manufacturers can incorporate improved design concepts, better insulation, and so forth, it behooves the system designer to spend an extra amount of time on incorporating the best possible protection into the integrated system so that outages due to factors beyond the designer's control are minimized in duration. This concept is important in that it does not suggest that the number of outages can be controlled. It does, however, suggest that by minimizing the duration and extent of the outage, disruption of the normal activities can also be minimized. The duration of the outage is to a certain degree directly proportional to the amount of damage suffered by the busway during the fault, and this amount of damage is determined by the protective elements in the circuit.

Copyright © 2001 IEEE. All rights reserved.

Copyright The Institute of Electrical and Electronics Engineers, Inc.
Provided by IHS under license with IEEE
No reproduction or networking permitted without license from IHS
Not for Resale

9.8.1 Types of busways

Several different designs of busways are available, and each offers certain features that are significant when considered in an integrated building plan. These features can be identified as follows:

a) Low-impedance busways
   1) Feeder
   2) Plug-in
   3) High-frequency
b) High-impedance busways
   1) Service-entrance
   2) Current-limiting
c) Simple plug-in busways

9.8.1.1 Low-impedance busways

Low-impedance busway designs (see Figure 9-18) achieve their low-reactance characteristics by a careful positioning of each bus bar in close proximity to other bars of an opposite polarity. This close physical spacing (ranging from 1.3 mm to 6.4 mm) demands that each bar be coated with some form of insulation to maintain satisfactory protection from accidental bridging. The losses in such designs are low. Low-impedance busways are offered in feeder construction to transmit substantial blocks of power to a specific location or in plug-in construction. Plug-in designs feature door-like provisions at approximately 0.6 m increments along the length of the busway which, when opened, expose the bus bars so that plug-in taps may be made with minimum effort. Although most low-impedance designs are intended for use on 60 Hz applications, some designs may be used at higher frequencies. Low-impedance designs are offered in voltage ratings of 600 V or less and current ratings up to 4000 A or more. Low-impedance busways may be ventilated or nonventilated and offered in indoor or outdoor construction, except that plug-in busways are available for indoor use only.

9.8.1.2 High-impedance busways

High-impedance busways (see Figure 9-19) are of two general types: busways with deliberate impedance introduced to minimize fault current levels and busways that achieve high-impedance characteristics as an incidental by-product of their construction.

In the first type, high reactance is obtained just as low reactance was, by a careful placement of each bar relative to every other bar. In this case, however, the goal is to maximize the spacing between pairs of bars of opposite polarity. Because these high-impedance designs experience high losses and because these losses appear as heat, ventilated construction and insulated conductors are frequently employed. They are offered in generally the same ratings as low-impedance designs.

Under the provisions of some standards, a special purpose bus duct design may be built in total installed lengths of 10 m or less to connect between an incoming service and a switchboard. This duct generally is constructed with a nonventilated enclosure and bars that

 Copyright © 2001 IEEE. All rights reserved.

Copyright The Institute of Electrical and Electronics Engineers, Inc.
Provided by IHS under license with IEEE
No reproduction or networking permitted without license from IHS Not for Resale

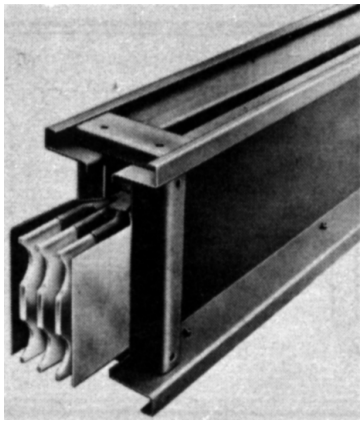

a)

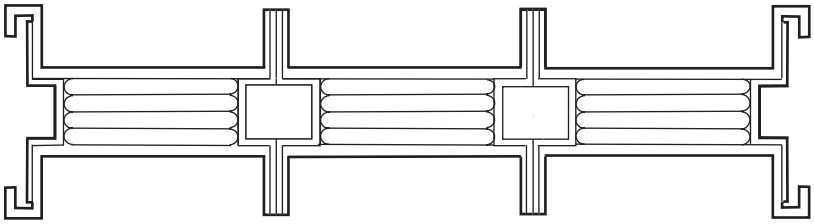

b)

a) Sandwich construction for heat dissipation and close proximity of conductors, which reduces reactance
b) Higher current ratings, which often employ multiple sets of bars

Figure 9-18—Low-impedance busway

may or may not be insulated. The bars are physically separated, and this large separation, introduced for safety, results in high-reactance characteristics. Short-run busways are limited to 2000 A and 600 V.

9.8.1.3 Simple plug-in busways

Among the first busway designs (see Figure 9-20) introduced in the mid-1930s was a simple construction that supported bare conductors on insulators inside a nonventilated casing with periodic plug-in access doors. Like the short-run busway, this type of duct offered generous bar-to-bar spacings, but because it was not used to carry large quantities of current for lengthy runs, its losses were not objectionable. Short-circuit ratings are usually modest. It is still widely used today and is available in ratings of 100 A to 1000 A and voltages of 600 V or less.

Copyright © 2001 IEEE. All rights reserved.

Copyright The Institute of Electrical and Electronics Engineers, Inc.
Provided by IHS under license with IEEE
No reproduction or networking permitted without license from IHS
Not for Resale

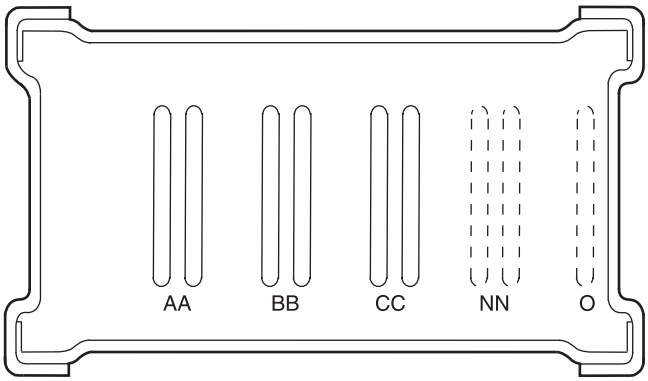

Figure 9-19—High-impedance busway where wide phase-to-phase spacings result in increased reactance

9.8.2 Types of faults

Faults associated with busways are either bolted or arcing.

9.8.2.1 Bolted faults

Due to the prefabricated nature of busways, bolted faults are rare. Bolted fault, in this context, refers to the inadvertent fastening together of bus bars in a solid fashion resulting in an unintended connection between phases. Bolted faults can occur during the initial installation or at a later date when modifications are made to the system. The actual offending connection might be found in a bus duct cubicle, but it is more often found in pieces of equipment connected to the busway, such as a switchboard connection or a load served from a bus plug. Because a bolted connection implies a low-resistance connection, the maximum level of fault current will flow; therefore, circuit protective elements should be sized in accord with this maximum fault level. Bolted faults result in a distribution of energy through the entire length of the bus duct circuit. This energy flow results in an intense magnetic field around each conductor that opposes or attracts fields around adjacent conductors. The mechanical forces thus created are high and capable of bending bus bars (see Figure 9-21), tearing duct casings apart, or shattering insulation. For this reason, the busway should have a short-circuit withstand rating that is greater than the maximum available fault current. Such ratings are published by the various busway manufacturers and are based on a duration of three cycles. Table 9-8 reflects the standard ratings of the National Electrical Manufacturers Association (NEMA) (see NEMA BU 1-1988 and UL 857-1994).

9.8.2.2 Arcing faults

In contrast to the bolted fault, arcing faults can occur at any time in the life of a system. Although many individual factors may initiate an arcing fault, they generally involve one or more of the following: loose connections, foreign objects, insulation failure, voltage spikes,

 Copyright © 2001 IEEE. All rights reserved.

Copyright The Institute of Electrical and Electronics Engineers, Inc.
Provided by IHS under license with IEEE
No reproduction or networking permitted without license from IHS Not for Resale

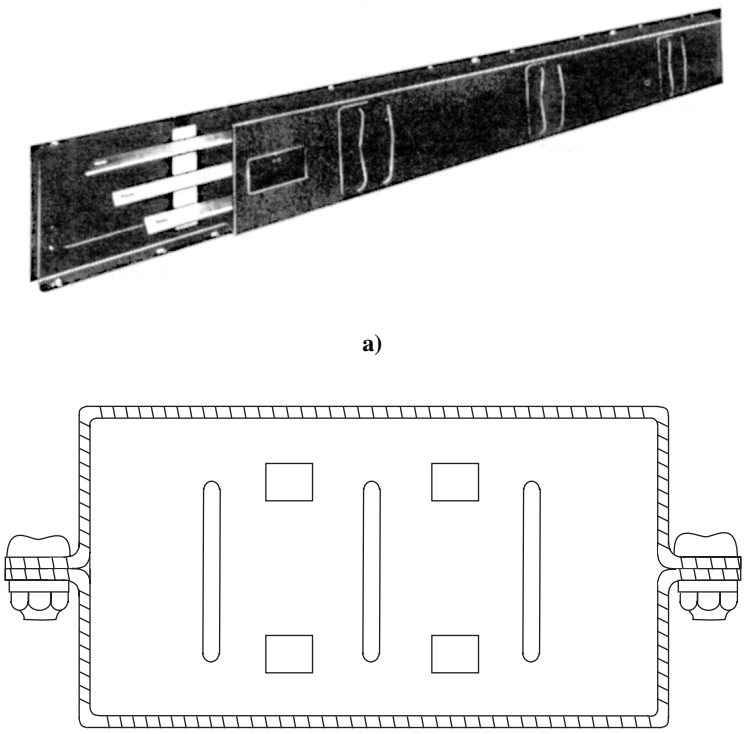

a)

b)

a) Bare bars spaced far apart offer generous electrical clearances and low cost.
b) Efficiency is low, but acceptable, for loads of 1000 A or less.

Figure 9-20—Simple plug-in busway

and water entrance. Because of the resistance of the arc and the impedance of the return path, current values are substantially reduced from the bolted fault level.

The interaction of the magnetic fields around the conductors and around the arc results in an unbalanced force that causes the arc to try to move away from the power source. If the path is unobstructed, the arc accelerates and moves quickly toward the remote end of the run. The only mark of its passage may be a scarcely noticeable pinhead-size pit every several centimeters along the edge of the bus bar. These tiny marks, however, provide a clear trail for the investigator and often lead back to the origin of the fault. As the arc travels away from the power source, the length of the circuit becomes greater and the forces causing movement become smaller. Eventually, the arc reaches some obstruction that causes it to hesitate long enough to cause serious burning or even hang up until the bus duct is burned open. Busways employing insulated conductors, of course, do not permit traveling arcs. Arcing, therefore, remains at the point of initiation or may burn slowly toward the source.

Copyright © 2001 IEEE. All rights reserved.

Copyright The Institute of Electrical and Electronics Engineers, Inc.
Provided by IHS under license with IEEE
No reproduction or networking permitted without license from IHS
Not for Resale

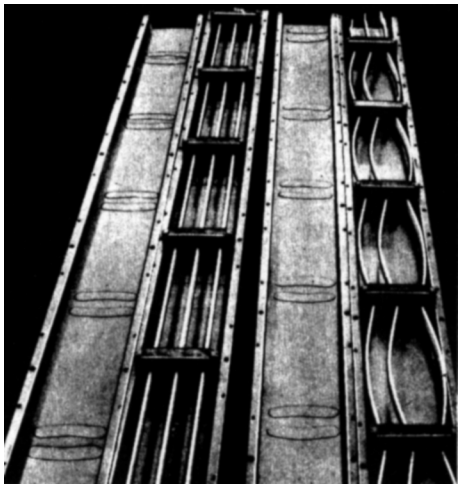

NOTE—The busway on the left was protected by current-limiting fuses while the busway on the right was protected by a noncurrent-limiting device.

Figure 9-21—Simple plug-in busways subjected to fault currents above their ratings

Although the magnitude of current present in an arcing fault is usually less than in a bolted fault, the entire thermal effect is concentrated at the arc location and results in major damage at that point. Figure 9-22 indicates the damage anticipated in terms of the quantity of conductor material vaporized by a phase-to-phase arc at 480 V. A 15 000 A arc persisting at one location for 9 cycles would remove about half of the 6-mm-×-51-mm copper conductor. This chart is based on a simple plug-in busway design with bars on 57 mm centers. Designs with bars closer together or designs employing aluminum conductors may be expected to show much more extensive damage. If the designer intends to minimize the duration of system outages, concern should be directed toward the arcing fault. Even in an insulated bus, arcing faults can persist, and the arc can extend from within the insulating tube to the burned-out spot in the insulation, several centimeters to a similar crater within the adjacent bus. Simple close spacing of an insulated bus does not guarantee against arcing faults.

9.8.3 Types of protection

Like any other circuit, busways are subject to overloads, bolted faults, and arcing faults. Each of these is characterized by an entirely different set of parameters and, therefore, requires an entirely different set of protective concepts. No single protective element suits all requirements. An examination of the required protection suggests the need for several protective devices.

Copyright © 2001 IEEE. All rights reserved.

Copyright The Institute of Electrical and Electronics Engineers, Inc.
Provided by IHS under license with IEEE
No reproduction or networking permitted without license from IHS
Not for Resale

Table 9-8—Busway minimum short-circuit current ratings

Continuous current rating of busway (A)		Minimum short-circuit current ratings (A)	
Plug-in	Feeder	Symmetrical	Asymmetrical
100		10 000	10 000
225		14 000	15 000
400		22 000	25 000
600		22 000	25 000
600	42 000	50 000	
800		22 000	25 000
800	42 000	50 000	
1000		42 000	50 000
1000	75 000	85 000	
1350		42 000	50 000
1350	75 000	85 000	
1600		65 000	75 000
1600	100 000	110 000	
2000		65 000	75 000
2000	100 000	110 000	
2500		65 000	75 000
2500	150 000		
3000		85 000	100 000
3000	150 000		
4000	200 000		
5000	200 000		

9.8.3.1 Overload protection

Overloads are, of course, the temporary conditions that cause a busway to carry currents greater than its continuous-current rating. Overloads such as stalled rotor currents or motor-starting currents generally are not harmful to the busway because each motor served is usually small in comparison to the capacity of the busway. Overloads are more likely to occur as a result of adding more or larger pieces of equipment, over a period of years, to an existing

Copyright © 2001 IEEE. All rights reserved.

Copyright The Institute of Electrical and Electronics Engineers, Inc.
Provided by IHS under license with IEEE
No reproduction or networking permitted without license from IHS
Not for Resale

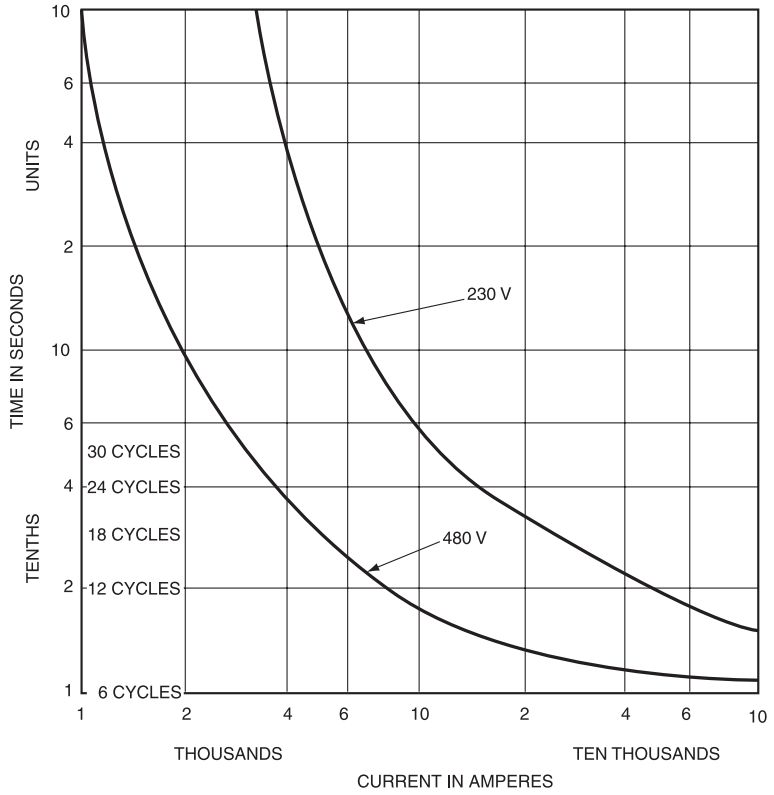

NOTE—The bars are spaced on 57 mm centers in standard plug-in bus duct.

Figure 9-22—TCC for a power arc to burn a 6-mm-×-51-mm copper bar halfway

busway circuit until its capacity is exceeded. Because busways tend to use large conductors, they exhibit considerable thermal inertia. For this reason, overloads of a temporary nature require a substantial time before their effect is noticed. Figure 9-23 displays time versus temperature rise for three different loading conditions. This particular busway required only 12 min to reach 55 ˚C at 200% current. The same busway took over 1 h to reach 55 ˚C at 125% loading. When operating at 100% loading, it required 25 min to raise the temperature up to the 55 ˚C limit with a 25% overload. Naturally, this time varies from size to size depending on the stable temperature produced by 100% loading. Most busway sizes are designed to operate at close to a 55 ˚C rise at full current. The value of 55 ˚C was selected because this value is the maximum rise allowed by Underwriters Laboratories (UL) on plated bus bar joints. It was generally assumed that the busway will operate in a 30 ˚C ambient temperature; and for this reason, busway manufacturers employed 85 ˚C insulation for many years (30 ˚C ambient + 55 ˚C = 85 ˚C operating temperature). More recent designs of busways employ higher temperature insulation, although they are still limited to a 55 ˚C rise at the hottest spot. This fact suggests that busways operated in a 50 ˚C ambient temperature could still carry full load (producing a 55 ˚C rise) without exceeding the 105 ˚C total temperature limit of the newer insulations. Therefore, busways employing 85 ˚C insulation

Copyright © 2001 IEEE. All rights reserved.

Copyright The Institute of Electrical and Electronics Engineers, Inc.
Provided by IHS under license with IEEE
No reproduction or networking permitted without license from IHS
Not for Resale

could easily suffer insulation damage should they be subjected to a high ambient temperature or a moderate overload, or both. For this reason, any protective device should be sensitive to overload conditions.

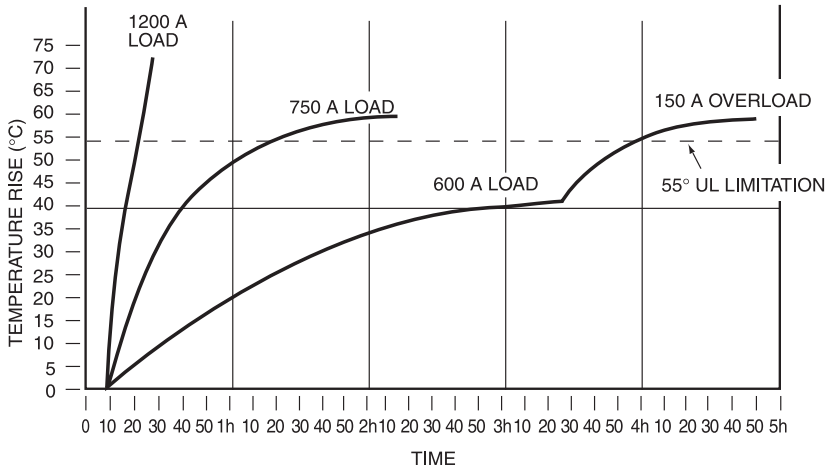

Figure 9-23—Time-temperature curves of 100%, 125%, and 200% loads on a 600 A rated low-impedance busway (31-mm-×-57-mm aluminum bar per phase)

The 105 °C or 130 °C insulations are intended to provide increased protection from the danger of high ambient temperatures or temporary overloads. The designer cannot apply long-duration overloads even to these newer insulations without eliminating all the extended life factors that they provide.

9.8.3.2 Arcing-fault protection

Arcing-fault currents in 480 V solidly grounded systems are found to be as low as 38% of the bolted-fault line-to-ground current calculated for the same circuit. Such faults, because of their destructive nature, should be removed with no intentional time delay. Unfortunately, the magnitude of this current may be so low that the time-delay characteristics of the overload protective device confuses the low-magnitude arcing fault with the moderate overload or temporary inrush current and allows it to persist for lengthy periods. For example, a 200% overcurrent on a fuse might require 200 s or more before the fuse functions.

Because the arc resistance and circuit impedance limit the current flowing in an arcing fault, most busway manufacturers offer an optional ground conductor, located inside the busway casing, to provide a low-reactance ground path for arcing current. Without this conductor, the arcing current to ground would be forced to travel on the high-impedance steel enclosure, including its many painted joints. This would have a tendency to reduce the already low current to an even lower level and further confuse the low-level protective device.

Copyright © 2001 IEEE. All rights reserved.

Copyright The Institute of Electrical and Electronics Engineers, Inc.
Provided by IHS under license with IEEE
No reproduction or networking permitted without license from IHS
Not for Resale

The best protection against an arcing fault is found to be well insulated bus and the second is ground-fault protection. Chapter 8 gives a more thorough discussion of this protection.

9.8.3.3 Bolted-fault protection

Bolted-fault currents can approach the maximum calculated available fault levels; therefore, protective elements should be capable of interrupting these maximum values. Circuit breakers and current-limiting fuses are suitable in these cases.

Under certain conditions busways may be applied on circuits capable of delivering fault currents substantially above the busway's short-circuit rating. Although electromagnetic forces increase as the square of the current, the use of fast fuses permits busways to be applied on circuits having available fault currents higher than the busway short-circuit rating. This is because the busway rating is based on a duration of 3 cycles while Class J, Class R, Class T, or Class L current-limiting fuses function in much less time, generally less than 0.5 cycle, during high-level faults. The property of inertia exhibited by the heavy bus bars causes the bars to resist movement during the short period of time that such fuses allow current to flow. Current-limiting fuses limit the magnitude of fault current to their let-through values (see Figure 9-24).

In general, a busway may be protected by a Class J, Class R, Class T, or Class L fuse against the mechanical or thermal effects of the maximum energy the fuse allows to flow, providing the fuse continuous-current rating is equal to the bus-duct continuous-current rating. Most manufacturers have conducted tests and certify that their designs are satisfactory for use with fuses at least one rating larger than the busway. These higher fuse ratings are often needed for coordination with a circuit breaker in series with the fuse. UL lists busways for maximum short-circuit currents when protected with specific circuit breakers or umbrella fuses.

9.8.3.4 Typical busway protective device

While no single element incorporates all the necessary characteristics, several elements may be assembled into a single device. A particularly effective device is the fused circuit breaker or fused switch equipped with ground-fault protection. In such devices, the circuit breaker elements (or fuses in the case of a fused switch) provide operation in the overload or low-fault range. In the fused circuit breaker, the coordinated current-limiting fuse functions during high-level faults. The ground-fault sensor detects the arcing faults that go to ground and, regardless of their low magnitude, signal the circuit breaker or switch to open.

9.8.4 Busway testing and maintenance

Several well-known tests should be performed before any busway is energized:

— Continuity check
— Insulation resistance test
— High-potential test

Copyright © 2001 IEEE. All rights reserved.

Copyright The Institute of Electrical and Electronics Engineers, Inc.
Provided by IHS under license with IEEE
No reproduction or networking permitted without license from IHS Not for Resale

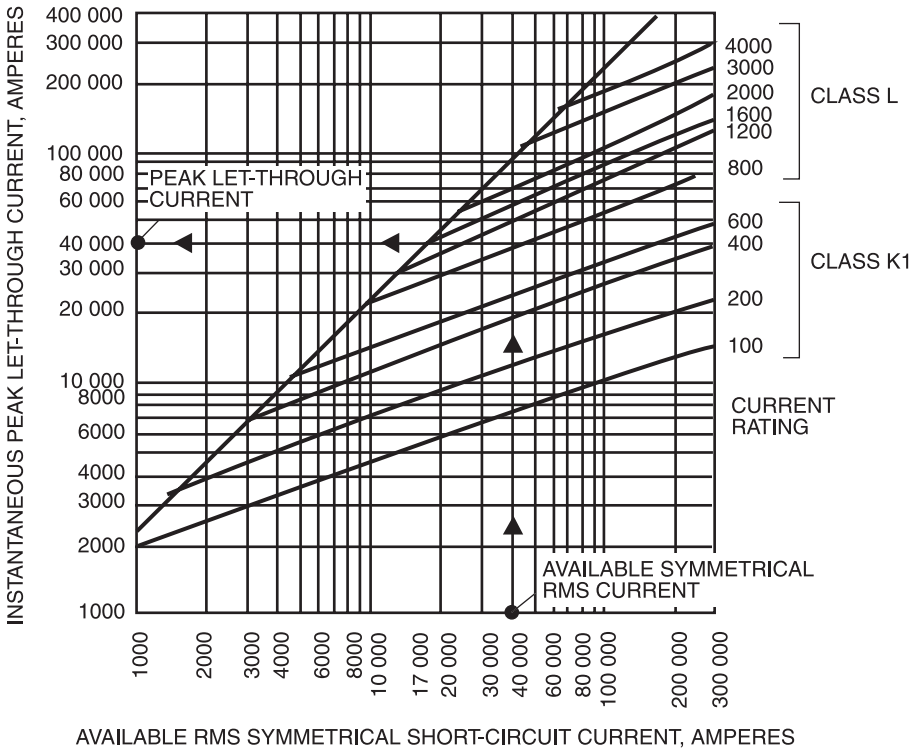

NOTE: CHECK SPECIFIC MANUFACTURER FOR EXACT DATA.

Figure 9-24—Typical 60 Hz peak let-through current as a function of available rms symmetrical current; power factor below 20%

These tests are conducted with the busway disconnected from the supply source and without bus plugs attached.

9.8.4.1 Continuity check

By using a low-voltage source and a bell, the system should be checked to be sure that no accidental solid connection exists between phases or from phase to ground.

9.8.4.2 Insulation resistance test

Application of a 500 V megohmeter test to the system indicates the insulation resistance values between phases and from phase to ground. While assigning specific acceptability limits to meter readings is not practical, any reading of less than 1 MΩ for a 30.5 m run should be investigated.

Copyright © 2001 IEEE. All rights reserved.

Copyright The Institute of Electrical and Electronics Engineers, Inc.
Provided by IHS under license with IEEE
No reproduction or networking permitted without license from IHS
Not for Resale

9.8.4.3 High-potential test

Application of 1650 V for 600 V equipment between phases for 1 min while measuring the leakage current should disclose incipient insulation failures.

9.8.4.4 Visual inspection

The importance of this step cannot be overemphasized. Periodic inspections to check for evidence of excessive heat or accumulation of dust or foreign matter should be performed as part of a normal preventive maintenance program. The frequency of such inspections should be determined by the nature of the installation, but ideally it might take place after 3 months, 6 months, and 1 year to build a history and provide a basis for scheduling future inspections.

9.9 References

This recommended practice shall be used in conjunction with the following standards. When the following standards are superseded by an approved revision, the revision shall apply.

ICEA P-32-382-1999, Short-Circuit Characteristics of Insulated Cable.[2]

ICEA P-45-482-1999, Short-Circuit Performance of Metallic Shields and Sheaths on Insulated Cable.

ICEA P-54-440, Ampacities of Cables in Open-Top Cable Trays.

ICEA S-19-81, Rubber-Insulated Wire and Cable for the Transmission and Distribution of Electrical Energy.

ICEA S-61-402, Thermoplastic-Insulated Wire and Cable for the Transmission and Distribution of Electrical Energy.

ICEA S-65-375, Varnished-Cloth-Insulated Wire and Cable for the Transmission and Distribution of Electrical Energy.

NEMA BU 1-1988, Busways.[3]

NEMA WC 3-1993, Rubber-Insulated Wire and Cable for the Transmission and Distribution of Electrical Energy.

NEMA WC 4-1988 (Reaff 1993), Varnished-Cloth-Insulated Wire and Cable for the Transmission and Distribution of Electrical Energy.

---

[2]ICEA publications are available from ICEA, P.O. Box 20048, Minneapolis, MN 55420, USA (http://www.icea.org/).

[3]NEMA publications are available from Global Engineering Documents, 15 Inverness Way East, Englewood, CO 80112, USA (http://global.ihs.com/).

 Copyright © 2001 IEEE. All rights reserved.

Copyright The Institute of Electrical and Electronics Engineers, Inc.
Provided by IHS under license with IEEE
No reproduction or networking permitted without license from IHS Not for Resale

NEMA WC 5-1992, Thermoplastic-Insulated Wire and Cable for the Transmission and Distribution of Electrical Energy.

NEMA WC 51-1986 (Reaff 1991), Ampacities of Cables in Open-Top Cable Trays.

NFPA 70-1999, National Electrical Code® (NEC®).[4]

UL 857-1994, Busways and Fittings.[5]

9.10 Bibliography

[B1] AIEE Committee Report, "The Effect of Loss Factor on Temperature Rise of Pipe Cable and Buried Cables, Symposium on Temperature Rise of Cables," *AIEE Transactions on Power Apparatus and Systems*, pt. III, vol. 72, pp. 530–535, June 1953.

[B2] Hamer, P. S., and Wood, B. M., "Are Cable Shields Being Damaged During Ground Faults?" *IEEE Transactions on Industry Applications*, vol. IA-22, no. 6, pp. 1149–1159, Nov./Dec. 1986.

[B3] ICEA P-46-426, Power Cable Ampacities for Copper and Aluminum Conductors.

[B4] ICEA S-66-524, Cross-Linked Thermosetting-Polyethylene Insulated Wire and Cable for the Transmission and Distribution of Electrical Energy.

[B5] IEEE Committee Report, "Protection Fundamentals for Low-Voltage Electrical Distribution Systems in Commercial Buildings," IEEE JH 2112-1, 1974.[6]

[B6] IEEE Std 141-1993 (Reaff 1999), IEEE Recommended Practice for Electric Power Distribution for Industrial Plants (*IEEE Red Book*).

[B7] IEEE Std 142-1991, IEEE Recommended Practice for Grounding of Industrial and Commercial Power Systems (*IEEE Green Book*).

[B8] IEEE Std 241-1990 (Reaff 1997), IEEE Recommended Practice for Electric Power Systems in Commercial Buildings (*IEEE Gray Book*).

[B9] Kaufmann, R. H., "Some Fundamentals of Equipment-Grounding Circuit Design," presented at the AIEE Summer and Pacific General Meeting, Los Angeles, CA, June 21-25, 1954.

---

[4]The NEC is published by the National Fire Protection Association, Batterymarch Park, Quincy, MA 02269, USA (http://www.nfpa.org/). Copies are also available from the Institute of Electrical and Electronics Engineers, 445 Hoes Lane, P.O. Box 1331, Piscataway, NJ 08855-1331, USA (http://standards.ieee.org/).

[5]UL standards are available from Global Engineering Documents, 15 Inverness Way East, Englewood, CO 80112, USA(http://global.ihs.com/).

[6]IEEE publications are available from the Institute of Electrical and Electronics Engineers, 445 Hoes Lane, P.O. Box 1331, Piscataway, NJ 08855-1331, USA (http://standards.ieee.org/).

Copyright © 2001 IEEE. All rights reserved.

Copyright The Institute of Electrical and Electronics Engineers, Inc.
Provided by IHS under license with IEEE
No reproduction or networking permitted without license from IHS
Not for Resale

[B10] Lee, R. H., "Rating Structure of Wire and Cable for Short and Intermediate Times," *IEEE I&CPS Conference Record,* 1977.

[B11] Neher, J. H., and McGrath, M. H., "The Calculation of the Temperature Rise and Load Capability of Cable Systems," *AIEE Transactions on Power Apparatus and Systems*, pt. III, vol. 76, pp. 752–772, Oct. 1957.

[B12] NEMA WC 7-1993, Cross-Linked Thermosetting-Polyethylene Insulated Wire and Cable for the Transmission and Distribution of Electrical Energy.

[B13] Shanklin, G. B., and Buller, F. H., "Cyclical Loading of Buried Cable and Pipe Cable," *AIEE Transactions on Power Apparatus and Systems*, pt. III, vol. 72, pp. 535–541, June 1953.

[B14] Wiseman, R. J., "An Empirical Method for Determining Transient Temperatures of Buried Cable Systems," *AIEE Transactions on Power Apparatus and Systems*, pt. III, vol. 72, pp. 545–562, June 1953.

 Copyright © 2001 IEEE. All rights reserved.

Copyright The Institute of Electrical and Electronics Engineers, Inc.
Provided by IHS under license with IEEE
No reproduction or networking permitted without license from IHS Not for Resale

Chapter 10
Motor protection

10.1 General discussion

This chapter applies specifically to three-phase integral horsepower motors. Many factors should be considered in choosing motor protection: motor importance, motor rating (from one to several thousand horsepower), thermal limit of rotor or stator, environment, power system source and its neutral grounding method, type of motor controller, etc. Protection for each specific motor installation should meet the requirements of the application. Power quality of the plant distribution system should be given appropriate attention, especially with regard to voltage sags and surges, harmonics, service interruptions, and operation of distribution line reclosers. Items in 10.2 and 10.3 should be considered as checklists when deciding upon protection for a given motor installation. After the types of protection have been selected, manufacturers' bulletins should be studied to ensure proper application of the specific protection chosen.

10.1.1 Low-voltage systems

Low-voltage systems are nominally 1000 V or less. Table 3-11 of the IEEE Std 141-1993[1] lists the standard motor nameplate ratings along with the preferred horsepower limits for the several standard motor voltages. At present, a maximum of 575 V and 750 kW exists for motor nameplate ratings.

10.1.2 Medium-voltage systems

Medium-voltage systems range from 1000 V and up to 69 kV. Industrial and commercial power systems operate with distribution voltages of 2.4 kV, 4.16 kV, 6.9 kV, and 13.8 kV and above. The selection of the motor voltages is described in Chapter 3 of IEEE Std 141-1993.

10.2 Factors to consider in protection of motors

The factors in 10.2.1 through 10.2.10 should be considered when selecting motor protection.

10.2.1 Motor characteristics

Motor characteristics include type, speed, voltage, horsepower rating, service factor, NEMA design (i.e., A, B, C, D, or E, which are the torque and speed characteristics for low- and medium-voltage motors as described in NEMA MG 1-1998), application, power factor rating, type of motor enclosure, bearing lubrication types, arrangement of windings and their temperature limits, thermal capabilities of rotor and stator during starting, running, and stall conditions. See Table 10-1.

[1]Information on references can be found in 10.6.

Copyright © 2001 IEEE. All rights reserved.

Copyright The Institute of Electrical and Electronics Engineers, Inc.
Provided by IHS under license with IEEE
No reproduction or networking permitted without license from IHS
Not for Resale

Table 10-1—Typical characteristics and applications of fixed frequency medium ac squirrel-cage induction motors

Polyphase characteristics	Locked-rotor torque (percent rated load torque)	Pull-up torque (percent rated load torque)	Breakdown torque (percent rated load torque)	Locked-rotor current (percent rated load current)	Slip	Typical applications	Relative efficiency
Design A Normal locked rotor torque and high locked rotor current	70–275[a]	65–190[a]	175–300	Not defined	0.5–5%	Fans, blowers, centrifugal pumps and compressors, motor-generator sets, etc., where starting torque requirements are relatively low	Medium or high
Design B Normal locked-rotor torque and normal locked-rotor current	70–275[a]	65–190[a]	175–300[a]	600–800	0.5–5%	Fans, blowers, centrifugal pumps and compressors, motor-generator sets, etc., where starting torque requirements are relatively low	Medium or high
Design C High locked-rotor torque and normal locked-rotor current	200–285[a]	140–195[a]	190–225[a]	600–800	1–5%	Conveyors, crushers, stirring machines, agitators, reciprocating pumps and compressors, etc., where starting under load is required	Medium
Design D High locked-rotor torque and high slip	275	Not defined	275	600–800	≥5%	High peak loads with or without flywheels such as punch presses, shears, elevators, extractors, winches, hoists, oil-well pumping and wire-drawing machines	Medium
IEC Design H High locked rotor torque and high locked rotor current	200–285[a]	140–195[a]	190–225[a]	800–1000	1–5%	Conveyors, crushers, stirring machines, agitators, reciprocating pumps and compressors, etc., where starting under load is required	Medium
IEC Design N Normal locked-rotor torque and high locked rotor current	70–190[a]	60–140[a]	160–200[a]	800–1000	0.5–3%	Fans, blowers, centrifugal pumps and compressors, motor-generator sets, etc., where starting torque requirements are relatively low	Medium or high

NOTE—These typical characteristics represent common usage of the motors—for further details consult the specific performance standards for the complete requirements.

Reprinted from NEMA MG10-2001 by permission of the National Electrical Manufacturers Association.

[a]Higher values are for motors having lower horsepower ratings.

Copyright © 2001 IEEE. All rights reserved.

Copyright The Institute of Electrical and Electronics Engineers, Inc.
Provided by IHS under license with IEEE
No reproduction or networking permitted without license from IHS
Not for Resale

10.2.2 Motor-starting conditions

Motor-starting conditions include full voltage or reduced voltage, adjustable speed drive (ASD), voltage drop and degree of inrush current during starting, repetitive starts, and frequency and total number of starts. See Figure 10-1 and Padden and Pillai [B10].[2]

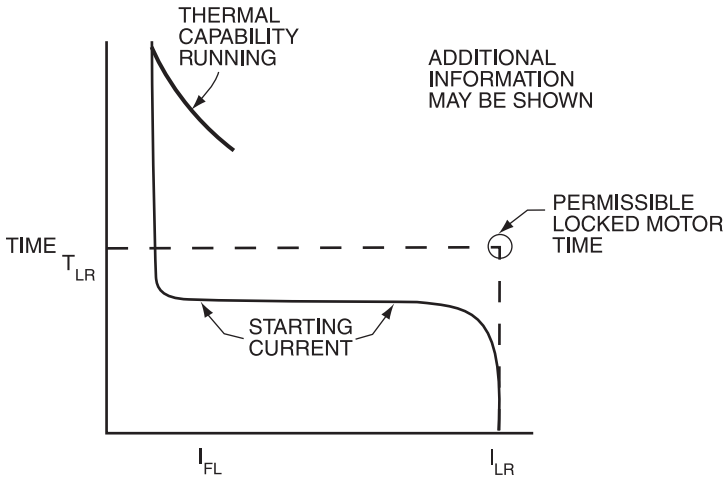

Figure 10-1—Typical motor-starting and capability curves (specific motor terminal voltage and for cold start)

10.2.3 Ambient conditions

Ambient conditions include maximum and minimum temperatures, altitude, adjacent heat sources, and ventilation arrangement.

10.2.4 Driven equipment

Load characteristics are important in the selection of the motor; otherwise, the driven equipment may lead to locked rotor, failure to reach normal speed, excessive heating during acceleration, overloading, and stalling. See Figure 10-2, which illustrates the relationship between the accelerating current of a motor versus the thermal damage limits of the motor during accelerating and running conditions. Present practice is to add an electronic reduced-voltage starter for motors that may have accelerating problems or to add an ASD for motors that could be operated at a reduced speed for some reasonable period of the duty cycle. The protection of ASDs is not discussed in this chapter. For a detailed study of reduced-voltage starting, read Chapter 7 of IEEE Std 241-1990.

[2]Numbers in brackets correspond to the numbers in the bibliography in 10.7.

Copyright © 2001 IEEE. All rights reserved.

Copyright The Institute of Electrical and Electronics Engineers, Inc.
Provided by IHS under license with IEEE
No reproduction or networking permitted without license from IHS
Not for Resale

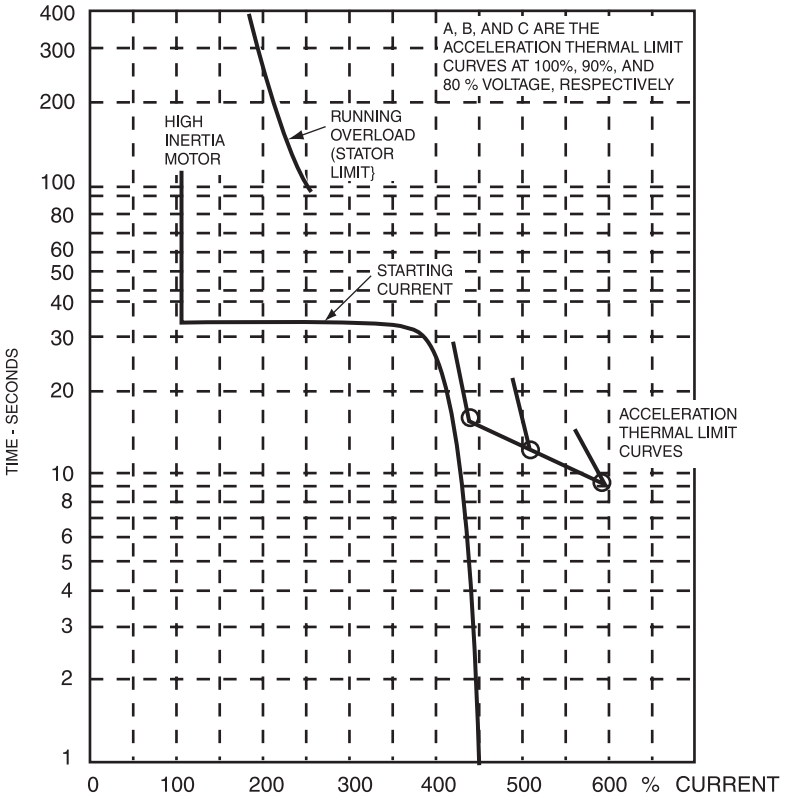

Figure 10-2—Typical time-current and thermal limit characteristic curves

10.2.5 Power system quality

Power system quality issues include types of system grounding, exposure to lightning and switching surges, capacitors and their controls for power factor correction, fault capacity, exposure to automatic reclosing or transfer, possibilities of single-phase supply (e.g., broken conductor, open disconnect switch or circuit breaker pole, blown fuse), and other loads that can cause voltage unbalance. Another factor is harmonics, which may cause motor overheating and affect the performance of electronic protective devices.

10.2.6 Motor importance

Factors that determine motor importance include motor cost, forced outage costs, amount of maintenance and operating supervision to be provided, and ease and cost of repair or replacement. A motor that is important to a plant's operating continuity or process safety should include a pre-trip alarm for operator intervention as a first step. An example is to initiate an alarm when a ground fault is detected on high-resistance-grounded neutral low-voltage systems. This scheme can also be applied to medium-voltage systems below 13.8 kV; but at the 13.8 kV voltage level, use of a trip, rather than alarm, is preferred.

Copyright © 2001 IEEE. All rights reserved.

Copyright The Institute of Electrical and Electronics Engineers, Inc.
Provided by IHS under license with IEEE
No reproduction or networking permitted without license from IHS
Not for Resale

10.2.7 Load-side faults for motor controllers

Although most of this subclause concerns low-voltage applications, the principles apply to medium-voltage applications of motor controllers, as well. Calculation of available fault current in a circuit is described in Chapter 2. Fuse and circuit breaker protection for conductors in feeder and branch circuits are described in Chapter 5, Chapter 6, and Chapter 7.

NOTE—Fuses and circuit breakers are rated for connection to available fault current sources on the basis of protecting the conductors on the load side of the circuit breaker or fuse.

In a motor controller, the above philosophy does not necessarily extend to protect the motor controller or its compartment. For proper protection of the motor controller, the fuse or circuit breaker (or motor circuit protector) that the controller manufacturer has had tested by a nationally recognized testing laboratory (NRTL) for the rated fault current available at its line terminals should be used. A motor circuit protector has an instantaneous-only trip element, similar in construction to a molded-case circuit breaker (MCCB), and is defined in 10.4.1.4.

Such motor controllers for best results should bear an NRTL listing for connection to available currents higher than the currents found in the power supply of the plant system under consideration or projected plant expansion fault duty. The NRTL-listed controller may still be substantially damaged by a load-side fault downstream of the controller. If protection is necessary to minimize damage to the controller itself, the controller manufacturer should be consulted, or Type 2 protection should be specified in accordance with IEC 60947-4-1-2000.

Controllers connected to available currents above 10 000 A symmetrical should be provided with fuses or circuit breakers rated to interrupt a fault at least equal to the line terminal fault current, with provisions to prevent substitution of underrated fuses or circuit breakers. This subject is covered more thoroughly under protection of low-voltage motors in 10.4.1.

10.2.8 Ground faults

Ground faults often start at a low current level and, if allowed to continue, lead to more extensive damage. Whether an arcing or bolted fault, the initial damage is to motor windings, but, if allowed to continue, could cause serious damage to the motor core. The cost to repair or replace would then be more expensive. This subject is treated in more depth in Chapter 8.

10.2.9 Maintenance capability and schedule

Maintenance capability and schedule are important factors. Selection of complex protection that cannot or will not be appropriately maintained can lead to inadequate protection. Likewise, the selection and setting of overload protection do not prevent inadvertent setting changes due to normal vibration or ambient conditions. Backup protection should be coordinated to operate if primary protection fails to operate. Maintenance is covered in Chapter 16.

Copyright © 2001 IEEE. All rights reserved.

--`,,`-`-`,,`,,`,`,,`---

Copyright The Institute of Electrical and Electronics Engineers, Inc.
Provided by IHS under license with IEEE
No reproduction or networking permitted without license from IHS
Not for Resale

10.2.10 Service factor

The service factor of an ac motor is a multiplier which, when applied to the rated horsepower, indicates a permissible horsepower loading that may be carried under the conditions specified for the service factor (see NEMA MG 1-1998).

10.3 Types of protection

10.3.1 Purpose of motor protection

In a power system, the basic premise is that the delivered power is of acceptable quality to satisfy the needs of the facility. However, an abnormal condition can exist due to plant conditions or the external power supply. Depending upon the plant size and location, conditions such as voltage transients, surges or sags, overfrequency or underfrequency, harmonics, or discontinuity may develop that require corrective action. For large facilities, the incoming power is likely monitored, and means have probably been taken to protect the facility from abnormal conditions. This practice is important, because this chapter focuses upon only motor protection. For smaller installations or unusual locations, plant protection may be more integrated with motor protection.

The motor protective devices permit the motor to start and run, but initiate tripping and removal of the motor circuit from the power system when the motor stalls, does not accelerate, draws excessive current, overheats, vibrates excessively, or shows other symptoms of improper motor conditions. Detection is through measurement of voltage, current, temperature, frequency, harmonics, vibration, and speed, where appropriate. However, for the majority of small motors (i.e., less than 220 kW), overcurrent is the most prevalent means.

In the discussion of protective devices in this chapter, reference is made to device numbers, which are described in IEEE Std C37.2-1996. In general, medium-voltage protection resorts to device numbers because of their convenience in lieu of using repetitive descriptions. The subject of device numbers is adequately described in Chapter 4.

10.3.2 Abnormal power supply conditions (undervoltage protection)

10.3.2.1 Undervoltage

Although overvoltage conditions should have some consideration, that phenomenon draws less attention because of protection by surge arresters for momentary conditions and relays for the less common sustained overvoltage. This subclause concentrates on undervoltage conditions. Further discussions concerning large motors can be found in 10.5.10. Undervoltage protection is used as follows:

a) *To prevent a motor from automatically restarting when voltage returns following an interruption*, as may happen with single-service arrangements or automatic transfer operations. This protection can be accomplished either by controls or by an undervoltage relay (Device 27). Consideration should also be given as to the

 Copyright © 2001 IEEE. All rights reserved.

Copyright The Institute of Electrical and Electronics Engineers, Inc.
Provided by IHS under license with IEEE
No reproduction or networking permitted without license from IHS Not for Resale

importance of the motor and whether conditions warrant that the motor ride through voltage sags or drop out at some specific voltage, not to be energized until other conditions may have been met.

b) *To avoid excessive inrush to the total motor load* on the power system with a corresponding voltage sag, following a voltage dip, or when voltage returns following an interruption.

c) *To avoid reaccelerating motors before their fields collapse*. Fast asynchronous reclosing has been damaging and can occur if cooperation is lacking between the industrial plant and its power supplier. The power supplier should be consulted to learn whether it follows the practice of adding time delay before reclosing circuit breakers following an automatic trip. This delay is not a panacea, and some other form of protection may be required, such as underfrequency relaying (Device 81).

10.3.2.2 Instantaneous or time delay

Undervoltage protection is either instantaneous (i.e., no intentional delay) or time-delay. Time-delay undervoltage protection should be used with motors important to continuity of service, providing it is satisfactory in all respects, to avoid unnecessary tripping on voltage sags that accompany external short circuits. Examples follow of nonlatching starters where time-delay undervoltage protection is not satisfactory and instantaneous undervoltage should be used:

NOTE—The limitations in Item a) and Item b) could be overcome by using either a separate ac power source for control or battery control on the contactor to prevent its instantaneous dropout. In other words, the time-delay undervoltage feature can be applied directly to the main contactor.

a) *Fusible switch or circuit breaker combination motor starters having ac magnetically held contactors used on systems of low three-phase fault capacity.* With the usual time-delay undervoltage scheme, the contactor could drop out due to the low voltage accompanying a fault on the load side of the contactor before the supply fuse or circuit breaker opens to remove the fault. Unless provided with blocking for automatic restart, the contactor could then reclose into the fault. This problem does not exist if the available fault capacity is high enough to open the external fuse or circuit breaker before the contactor interrupts the fault current.

b) *Synchronous motors used with starters having ac magnetically held contactors*. With the usual time-delay undervoltage scheme, the contactor could drop out on an externally caused system voltage dip, then reclose, and reapply the system voltage to an out-of-phase internal voltage in the motor. The high initial inrush could damage the motor winding, shaft, or foundation. This problem could also occur for large, two-pole squirrel-cage induction motors. If asynchronous reclosing represents a risk to the motor, undervoltage protection alone may not suffice; and an underfrequency relay may be required. Asynchronous reclosing usually is not a problem with the 150 kW and smaller induction motors with which magnetically held contactor starters are used because the internal voltages of these motors decay quite rapidly.

c) *Motors used on systems having fast automatic transfer or reclosing where the motor must be tripped to protect it before the transfer or reclosure takes place*. See Item b) regarding asynchronous reclosing needing an underfrequency relay.

Copyright © 2001 IEEE. All rights reserved.

Copyright The Institute of Electrical and Electronics Engineers, Inc.
Provided by IHS under license with IEEE
No reproduction or networking permitted without license from IHS
Not for Resale

d) *When the total motor load having time-delay undervoltage protection results in excessive inrush current and voltage drop after an interruption*. A problem could arise of having insufficient system capacity to restart the motors. Options include designing for a larger power capacity than needed for normal operations or removing some of the motor loads from automatic restarting. Least important motors should use instantaneous undervoltage protection. Time-delay undervoltage protection of selectively chosen delays could be used on the motors whose inrush the system can handle. Sequencers are available for selecting the order of motor restarts, thus reducing the need for oversized transformers or lower transformer impedances. Caution should be observed when placing numerous controls within one device where common mode failure could negate the benefits.

10.3.2.3 With latching contactor or circuit breaker

Motor switching devices, such as latching contactors or circuit breakers, inherently remain closed during periods of low or zero ac voltage. The following methods are used to trip open the devices:

a) Energize shunt trip coil from a battery.
b) Energize shunt trip coil from a separate reliable source of ac. This ac source should be electrically isolated from the motor ac source in order to enhance reliability.
c) Energize shunt trip coil from a capacitor charged through a rectifier from the ac system. This method is commonly referred to as capacitor trip.
d) De-energize a solenoid and allow a spring release to trip the contactor or circuit breaker.

Item a) through Item c) are usually used in conjunction with voltage-sensing relays (see 10.3.2.6). Item d) could have the solenoid operating directly either on the ac system voltage or from a battery, where a relay would sense loss of ac voltage and de-energize the solenoid. The solenoid could be either instantaneous or time-delay.

10.3.2.4 With ac magnetically held main contactor

Because the ac magnetically held main contactor (which supplies the motor) drops out on loss of ac, it provides an instantaneous undervoltage function. If automatic restart is required because of the process, two common approaches achieve time-delay undervoltage protection:

a) Permit the main contactor to drop out instantaneously, but provide a timing scheme (which starts timing when ac voltage is low or zero) to reclose the main contactor when normal ac voltage returns within some preset timing interval. Some of the timing schemes in use are as follows:
   1) Capacitor charged through a rectifier from the ac system. The charge keeps an instantaneous dropout auxiliary relay energized for an adjustable interval, which is commonly 2 s or 4 s.
   2) Standard timer that times when de-energized (e.g., pneumatic or inverse time-undervoltage relay).

 Copyright © 2001 IEEE. All rights reserved.

Copyright The Institute of Electrical and Electronics Engineers, Inc.
Provided by IHS under license with IEEE
No reproduction or networking permitted without license from IHS Not for Resale

b) Use a two-wire control. This control utilizes a maintained closed start button or operates from an external contact responsive to some condition such as process pressure, temperature, or level. The main contactor drops out with loss of ac, but recloses when ac voltage returns.

Neither arrangement provides perfect undervoltage protection and should not be used if automatic restarting could endanger personnel or equipment.

10.3.2.5 With dc magnetically held main contactor

With a dc magnetically held main contactor, the contactor remains closed during low or zero ac voltage. Time-delay undervoltage protection is achieved using voltage-sensing relays (see 10.3.2.6). For this scheme, the dc voltage should be monitored as well.

10.3.2.6 Voltage-sensing relays

A commonly used type of voltage-sensing relay is the single-phase inverse time-undervoltage relay. Because a blown control fuse could cause tripping, two or three such time-undervoltage relays are sometimes used, connected to different phases, and wired so that all must operate before tripping occurs or re-energization can be permitted.

Three-phase undervoltage relays are available. Many operate in response to the area of the voltage triangle formed by the phasors of the three-phase voltages. Alternatively, a voltage balance relay (Device 60) could be used for blown fuse protection.

When applying undervoltage protection with time delay, the time-delay setting should be chosen so that time-delay undervoltage tripping does not occur before all external fault-detecting relays have had an opportunity to clear faults from the system. This practice recognizes that the most frequent causes of low voltage are system faults; and when these faults are cleared, most induction motors can continue normal operation. For inverse time-undervoltage relays, their trip time versus system short-circuit current should be plotted to ensure that they trip only after the system overcurrent protective relays. This procedure should be done for the most critical coordination condition, which exists when the system short-circuit capacity is minimum. This study should be included with normal systems studies concerning voltage drop, short circuits, etc. Typical time delay at zero voltage is 2 s to 5 s.

For motors extremely important to continuity of service, such as some auxiliaries in electric generating plants, the undervoltage relays are used only to alarm. The motors providing fire pump service should be protected in accordance with NFPA 20-1999.

10.3.3 Phase unbalance protection (Device 46, current) (Device 47, voltage)

10.3.3.1 Purpose

The purpose of phase unbalance protection is to prevent motor overheating damage. Motor overheating occurs when the phase voltages are unbalanced. A small voltage unbalance

Copyright © 2001 IEEE. All rights reserved.

Copyright The Institute of Electrical and Electronics Engineers, Inc.
Provided by IHS under license with IEEE
No reproduction or networking permitted without license from IHS
Not for Resale

produces a large negative-sequence current flow in both synchronous and induction motors. The per-unit negative-sequence impedance of either motor is approximately equal to the reciprocal of the rated voltage per-unit locked-rotor current. When, for example, a motor has a locked-rotor current equal to six times rated current, the motor has a negative-sequence impedance of approximately 0.167 per unit (16.7%) on the motor rated input kilovoltampere base. When voltages having a 0.05 per-unit negative-sequence component are applied to the motor, negative-sequence currents of 0.30 per unit flow in the windings. Thus, a 5% voltage unbalance produces a stator negative-sequence current equal to 30% of full-load current. This situation can lead to a 40% to 50% increase in temperature rise.

10.3.3.2 Single phasing

A special form of unbalance is the complete loss of one phase at the same voltage level as the motor. Under starting conditions, a three-phase motor is unable to start. If the single phasing occurs during full-load running conditions, the current in the other two phases increases to approximately 173% of normal full-load current. In each case, adequate protection is required. For large facilities, a bus phase-balance (negative-sequence) overvoltage relay (Device 47) could be installed to alarm in a sensitive manner. This alarm would be set in conjunction with individual large motor (phase-balance) negative-sequence overcurrent relays (Device 46). For small installations, a single phase-balance (negative-sequence) overcurrent relay may suffice for a large, important motor; or alternatively one phase-balance (negative-sequence) bus overvoltage relay could be set to protect several motors, by alarming and/or tripping.

When a motor is supplied from a delta-wye or wye-delta transformer, single phasing on the supply voltage (primary) side of the transformer results in currents to the motor in the ratio of 115%, 115%, and 230% of normal. In two phases, the current is only slightly greater than prior to single phasing, while it is approximately doubled in the third phase. This situation requires a properly sized overload relay or time-delay fuse in each phase if the motor does not have suitable phase unbalance protection.

Many motors, especially in the higher horsepower ratings, can be seriously damaged by negative-sequence current heating, even though the stator currents are low enough to go undetected by overload (overcurrent) protection. (The standard service factor for large motors is 1.00.)

Therefore, phase unbalance protection is desirable for all motors where its cost can be justified relative to the cost and importance of the motor. Phase unbalance protection should be provided in all applications where single phasing is a strong possibility due to factors such as the presence of fuses, overhead distribution lines subject to conductor breakage, or disconnect switches (which may not close properly on all three phases).

A general recommendation is to apply phase unbalance protection to all motors 750 kW and above. For motors below 750 kW, the specific requirements should be investigated. Phase unbalance protection should also be considered for certain important motors such as hermetic refrigeration chiller motors and similar motors having a service factor less than 1.25.

Copyright © 2001 IEEE. All rights reserved.

--`,,`-`-`,,`,,`,`,,`---

Copyright The Institute of Electrical and Electronics Engineers, Inc.
Provided by IHS under license with IEEE
No reproduction or networking permitted without license from IHS Not for Resale

10.3.3.3 Instantaneous or time delay

Unbalanced voltages accompany unbalanced system faults. Therefore, phase unbalance protection should include sufficient delay to permit the system overcurrent protection to clear external faults without unnecessary tripping of the motor or motors.

Delay is also necessary to avoid the possibility of tripping on motor starting inrush. Therefore, unbalance protection having an inherent delay should be chosen. Another (high-risk) scheme is to use an auxiliary timer (Device 62). Its selection is important because the timer probably has a higher failure rate than the protective relay. If a time delay of more than 2 s or 3 s is used, the motor designer should be consulted.

10.3.3.4 Relays

Several types of relays are available to provide phase unbalance protection, including single phasing. Most of these relays are described in Chapter 4 and in IEEE Std C37.96-2000. Further information about specific relays should be obtained from the various manufacturers. Most of the commonly used relays can be classified as follows:

a) *Phase current balance* (Device 46). Phase current balance relays are induction disk devices that detect unbalance in the currents in the three phases. As such they have an inherent time delay. Occasionally, a timer may be required to obtain additional delay. Because this relay cannot protect for unbalances less than 25%, its selection is questionable except for complete loss of one phase. Unfortunately, this device shares the same device number as the negative-sequence overcurrent relay (Device 46) in Item c).
b) *Negative-sequence voltage* (Device 47). Because negative-sequence voltage relays may operate instantaneously on negative-sequence overvoltage, some external time delay may be necessary.
c) *Negative-sequence overcurrent* (Device 46). A negative-sequence overcurrent relay is a time-overcurrent relay with extremely inverse characteristics that operates at very low levels of negative-sequence current. Settings are available to alarm before trip and to trip upon a limit of I_2^2t.

10.3.4 Overcurrent protection (Device 51, inverse time) (Device 50, instantaneous)

Overcurrent sensing is the most frequently used method to monitor and protect the many power circuits in a facility. If a short circuit occurs, the action must be initiated without delay, whereas an overload within the service factor rating may not require any action. Under Chapter 15 guidelines, no delay should occur in the operation of the protection for circuit components (e.g., motors) upon sensing a fault, with backup protection coordinated by being delayed in time or overcurrent magnitude, or both.

Motor branch circuit protection is to operate whenever a motor fails to accelerate, when the motor-running current exceeds normal limits, and when a short circuit is detected. Time-overcurrent devices are normally used to protect against overloads and failure to

Copyright © 2001 IEEE. All rights reserved.

Copyright The Institute of Electrical and Electronics Engineers, Inc.
Provided by IHS under license with IEEE
No reproduction or networking permitted without license from IHS
Not for Resale

accelerate, whereas instantaneous devices operate without any intentional delay for short-circuit protection.

Depending upon the motor rating and voltage, the devices for performing these functions are of different construction. For medium-voltage or large motors, the protection may be in the form of three phase-overcurrent protective relays or one multifunction relay (Device 11), which would include such other protective functions as accelerating characteristics, current unbalance, differential overcurrent, ground-fault current, and loss of load. Such complex protection would normally not be provided for unimportant low-voltage motors, although capable multifunction devices are available for low-voltage motor protection. In addition, some motors may be supplied directly from low-voltage switchgear and use the protective characteristics described in IEEE Std C37.17-1997 and shown in Chapter 7. The decision on whether to use low-voltage switchgear is usually influenced by the frequency of motor starts because motor controllers are rated for a considerably greater number of operations.

10.3.5 Multifunction relay (Device 11)

An important development has been the multifunction motor protection relay. Recognized as a powerful tool, the multifunction relay incorporates many protective functions that would normally be applied through the use of individual protective relays, but are all incorporated into one enclosure. For example, the relay incorporates short-circuit and overcurrent protection in each phase- and ground-fault protection. Depending upon the options selected, the relay could include protection against stalls, locked rotor, overtemperature alarm or trip, current unbalance, metering, and communications. No detailed discussion of the relay is included in this subclause because the possible functions are described under other protective relays, such as Device 50 and Device 51.

10.4 Low-voltage motor protection

Conventionally, low-voltage motors drive small process equipment and auxiliary equipment. These motors, usually 220 kW and below, may operate continuously or may be in cyclical services. These applications use motor contactors in motor control centers (MCCs) or combination starters.

One-line diagrams of typical low-voltage starters for industrial applications using MCCs or combination starters are shown in View (a), View (b), View (c), and View (d) of Figure 10-3.

10.4.1 Low-voltage motor overcurrent protection

Overload protection for low-voltage motors is usually provided by thermal overcurrent relays or electronic overcurrent devices. In some cases, dual-element fuses or a thermal-magnetic circuit breaker may serve as the primary overload devices, but are normally backup protection for overload relays. Short-circuit protection for low-voltage motors is usually provided by fuses, a thermal-magnetic circuit breaker, or an instantaneous trip device (or motor circuit protection) in combination with an overload relay. Ground-fault protection for low-voltage motors is usually provided by the short-circuit protection device, but ground-

 Copyright © 2001 IEEE. All rights reserved.

Copyright The Institute of Electrical and Electronics Engineers, Inc.
Provided by IHS under license with IEEE
No reproduction or networking permitted without license from IHS Not for Resale

fault relays may be installed. (See Bradfield and Heath [B1]; Nailen [B8]; Gregory and Padden [B4] and [B3]; Smith [B12].)

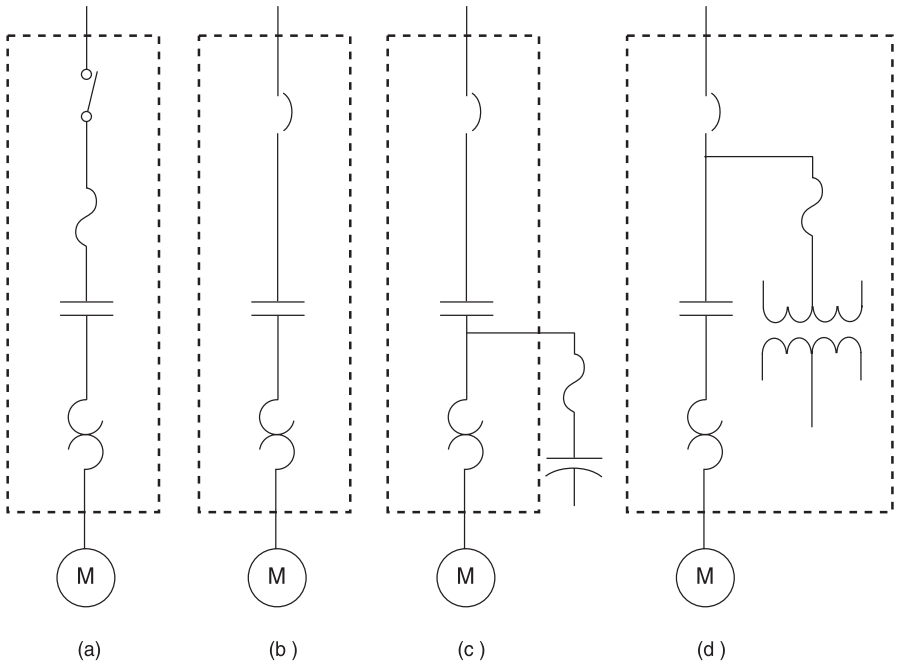

a) Typical starter with fuses
b) Typical starter with a circuit breaker
c) Typical location for power factor correction capacitors
d) Typical location for a control power transformer

Figure 10-3—Typical low-voltage starter one-line diagrams for industrial applications using MCCs or combination starters

10.4.1.1 Thermal and electronic overload relays

Thermal overload relays are constructed as either melting alloy or bimetallic. Although single-phase elements are the most common, they are also furnished in a three-phase construction block design. The relays are designed to operate within a current range, as follows:

a) Selection of the heater element should be based upon the relay manufacturer's tables relating motor characteristics and ambient temperature conditions and based on the location of the motor relative to the relay. This method is employed because only minor adjustments need be made in the relay itself to set a trip value to match the motor current.
b) After the selection of the heater, the melting alloy unit is considered nontamperable.
c) Older bimetallic types may have limited adjustment of trip setting intended to compensate for ambient temperature. Newer relays have a wider range of adjustment.

Copyright © 2001 IEEE. All rights reserved.

--`,,`-`-`,,`,,`,`,,`---

Copyright The Institute of Electrical and Electronics Engineers, Inc.
Provided by IHS under license with IEEE
No reproduction or networking permitted without license from IHS
Not for Resale

d) The thermal memory of bimetallic overload relays provides satisfactory protection for cyclic overloading and closely repeated motor starts.

e) A manual reset feature is available and is normally trip free (i.e., manual override is not possible).

f) Some relays are available as ambient-temperature-compensated or as noncompensated. Noncompensated is an advantage when the relay and motor are in the same ambient because the relay opening time changes with temperature in a similar manner as the motor overload capability changes with temperature.

g) NEMA ICS 2-2000 has standardized motor overload relays into three classes denoting time delay to trip on locked-rotor current: Class 10 for fast trip, 10 s at six times the overload rating; Class 20, for intermediate trip, for 20 s at six times the overload rating; and Class 30 for long-time trip, 30 s at six times the overload rating. In most applications, the Class 10 relay is applied for hermetic and other motors with a service factor of 1.00 or 1.05. The Class 20 relay is commonly used for higher service factor motors, such as NEMA Design T frame motors. A Class 30 relay is used in applications where high-inertia loads cause the motor to have a long starting time, such as conveyor belt motors. Electronic devices, sometimes integral with the contactor, sense the current in all three phases. They can be adjusted for Class 10, Class 20, or Class 30.

Overload relays are sized in accordance with the National Electrical Code® (NEC®) (NFPA 70-1999). Article 430-32, Article 430-33, and Article 430-34 reference the motor nameplate rating. Power factor correction capacitors installed for individual motors may be connected as shown in View (c) of Figure 10-3, and no current adjustment need be made to the overload devices. However, this connection is not the only method of providing individual power factor correction and has been known to cause contactor failures due to resonance with other motor capacitors (see Nailen [B8]). When capacitors are installed between the overload device and the motor, the overload relay provides circuit impedance, which generally dampens the resonance problem. However, the overload relay current rating should be adjusted to account for the reduced current flowing to the motor-capacitor combination. Part 14.43.3 of NEMA MG 1-1998 recommends a bus connection when several motors are connected to the bus in order to minimize the potential harmonic resonance.

Overload relays and other devices for motor overload protection that are not capable of opening short circuits shall be protected by fuses or circuit breakers with ratings or settings in accordance with NEC Article 430-52 or by a motor short-circuit protector in accordance with NEC Article 430-52.

10.4.1.2 Time-delay (or dual-element) fuses

Time-delay fuses are available from 0.1 A through 600 A. Fuses for short-circuit and ground-fault protection shall be sized in accordance with NEC Article 430-52 and Table 430-152. The full-load current values used for that table are in Table 430-148, Table 430-149, and Table 430-150. The rating of a time-delay fuse shall be permitted to be increased, but in no case exceed 225% (400% for Class CC fuses) of full-load current. A one-line diagram of a typical starter with fuses is shown in View (a) of Figure 10-3. Also available are fuses without

 Copyright © 2001 IEEE. All rights reserved.

Copyright The Institute of Electrical and Electronics Engineers, Inc.
Provided by IHS under license with IEEE
No reproduction or networking permitted without license from IHS Not for Resale

time delay, which can provide short-circuit and ground-fault protection, but may not provide any backup protection.

10.4.1.3 Inverse-time circuit breakers

These circuit breakers (i.e., molded case) are available from 10 A through 3000 A when constructed with thermal-magnetic trip elements, and up to 5000 A when constructed with solid state trip elements. Both types of trip devices are referred to in the NEC as inverse-time circuit breakers and shall be sized in accordance with NEC Article 430-52 and Table 430-152. The full-load current values used for that table are in Table 430-148, Table 430-149, and Table 430-150. The rating of an inverse-time circuit breaker shall be permitted to be increased, but in no case exceed,

— 400% for full-load currents of 100 A or less,
— 300% for full-load currents greater than 100 A.

A one-line diagram of a typical starter with a circuit breaker is shown in View (b) of Figure 10-3.

10.4.1.4 Instantaneous trip circuit breakers (or motor circuit protectors)

Instantaneous trip circuit breakers (i.e., molded-case), commonly called motor circuit protectors, are available from 3 A through 1200 A. The instantaneous setting can typically be adjusted in fixed steps to between 3 to 13 or 3 to 10 times the continuous-current rating. Instantaneous trip circuit breakers are tested under UL 489 [B13]. The trip range of the breaker should be within +30% or –20% of the set point. On the coordination plot, these devices have a broad bandwidth corresponding to these tolerances.

These breakers are referenced as instantaneous trip breakers and shall be sized in accordance with NEC Article 430-52 and Table 430-152. The full-load current values used for that table are in Table 430-148, Table 430-149, and Table 430-150. Trip settings above 800% for other than Design E motors and above 1100% for Design E motors shall be permitted where the need has been demonstrated by engineering evaluation. In such cases, it shall not be necessary to first apply an instantaneous trip circuit breaker at 800% or 1100%. Either an adjustable instantaneous trip circuit breaker or a motor short-circuit protector shall be used when it is part of a listed combination controller having coordinated motor overload, short-circuit, and ground-fault protection in each conductor and if it operates at not more than 1300% of full-load motor current for other than NEMA Design E motors and no more than 1700% of motor full-load current for Design E motors. A one-line diagram of a typical starter with a circuit breaker is shown in View (b) of Figure 10-3.

Two points should be reviewed by the engineer. First, the overload device is normally the only line of protection from overloads and high-impedance faults when using instantaneous trip circuit breakers. A failure of the overload device, the overload wiring, or the contactor can prevent the circuit from being isolated due to overload or high-impedance fault conditions. Where backup protection is desired for these abnormal conditions, an inverse-time circuit breaker or dual-element fuses should be selected.

Copyright © 2001 IEEE. All rights reserved.

Copyright The Institute of Electrical and Electronics Engineers, Inc.
Provided by IHS under license with IEEE
No reproduction or networking permitted without license from IHS
Not for Resale

Second, the selection of the contactor and conductor sizes depends on the setting of the instantaneous trip function. NEMA-rated magnetic contactors are tested to break up to 10 times the full-load current values given in NEC Table 430-148, Table 430-149, and Table 430-150 for the corresponding horsepower rating of the contactor. When an overload device trips, the contactor is called upon to open the circuit. Therefore, the contactor should be rated to break the circuit. Under high-impedance fault conditions, the current may be in the range of 10 to 17 times the motor full-load current. The instantaneous trip breaker may be set above the 10 times full-load current break test value of the contactor. Refer to Figure 10-4 for the time-current curves of a 480 V, 75 kW motor application with a 175 A instantaneous trip breaker, a Class 20 overload, and a NEMA size 4 magnetic contactor (i.e., 1350 A break rating). This figure illustrates a case where the instantaneous trip is set about 12 times the full-load current of 124 A (see NEC Table 430-150). The #2/0 AWG XHHW conductor is rated for 175 A at 75 °C. The contactor is not protected using the setting of about 1500 A. A lower instantaneous setting would protect the contactor, but some motors may trip the breaker on starting. Contactors for NEMA Design E motors shall have a horsepower rating not less than 1.4 times the rating of a motor rated 3 kW through 75 kW, have a rating not less than 1.3 times the rating of the motor rated over 75 kW, or be marked for use with a Design E motor (see NEC Article 430-83, Exception No. 1).

In a recently published book, the authors reveal that some high-efficiency motors draw up to 2.83 times locked-rotor current during starting, and they recommended a 19.2 times full-load current on the instantaneous breaker setting, approximately 3 times locked-rotor current in one case (see Prabhakara, et al. [B11]). A typical value used in the industrial applications is 1.76 times locked-rotor current for estimating asymmetrical inrush current. To prevent false tripping of the instantaneous trip breaker on starting, several options are available:

a) Use an autotransformer or other means for reduced voltage starting to limit the inrush current.
b) Specify a contactor with a higher break rating and set the instantaneous breaker at a higher setting within the NEC limits.
c) Use an inverse-time circuit breaker in place of the instantaneous trip breaker so that the instantaneous setting, if available, can be set above the motor inrush current.

10.4.2 Low-voltage motor ground-fault protection

Many low-voltage motor applications utilize fuses or MCCBs for ground-fault protection. However, the type of protection selected is dependent upon the type of system grounding.

10.4.2.1 Solidly grounded systems

Fuses and circuit breakers normally provide adequate ground-fault protection for motors on solidly grounded systems. However, for larger motors applications, such as the 75 kW motor shown in Figure 10-4, miscoordination occurs. For example, this motor is protected by an instantaneous only circuit breaker set at 1500 A trip. The main breaker ground trip is set at 1200 A, the maximum allowed by NEC Article 230-95, where a shutdown does not introduce additional hazards. Miscoordination can occur in the region between the ground trip device on the main low-voltage power circuit breaker (LVPCB) and the instantaneous trip circuit

Copyright © 2001 IEEE. All rights reserved.

--`,,`,,`,,,,`,`,,`---

Copyright The Institute of Electrical and Electronics Engineers, Inc.
Provided by IHS under license with IEEE
No reproduction or networking permitted without license from IHS Not for Resale

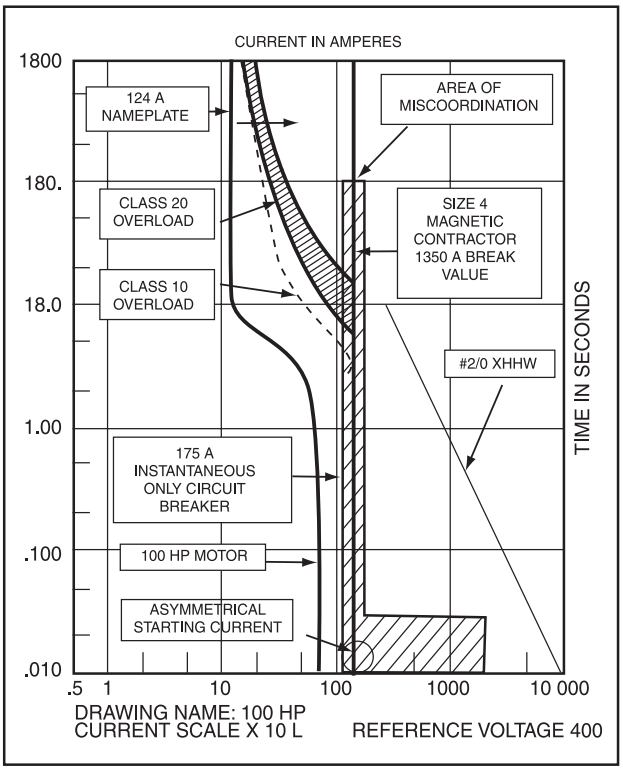

NOTE—The contactor is not protected using the 1500 A setting. The motor asymmetrical inrush current will probably trip the breaker when starting.

Figure 10-4—Time-current curve for a 480 V, 75 kW motor with a size 4 contactor, Class 20 overloads, and an instantaneous trip circuit breaker with a setting of 12 times full-load current

breaker protecting the motor. LVPCBs, specified with long-time and short-time functions only (i.e., no instantaneous element), can usually be coordinated selectively.

If selectivity between the individual motor protective device and the main breaker is desired for ground faults, additional protective devices should be installed for the larger motors or interlocking ground-fault devices should be installed. For solidly grounded systems, the protective devices should be wired to open the breaker, not the contactor, unless the contactors are rated high enough to interrupt the available fault current. Some breakers have integral solid-state devices that sense ground faults and open the breaker. Contactors may also have integral solid-state devices that sense ground faults, but these may open the contactor. Also, zero-sequence current transformers (CTs) and trip units can be installed to shunt-trip the circuit breakers or switch, provided that the circuit breaker or switch has a shunt trip, which is not necessarily included on the circuit breaker or switch unless ordered that way.

Copyright © 2001 IEEE. All rights reserved.

Copyright The Institute of Electrical and Electronics Engineers, Inc.
Provided by IHS under license with IEEE
No reproduction or networking permitted without license from IHS
Not for Resale

10.4.2.2 Low-resistance-grounded systems

Low-resistance-grounded systems are not normally used on low-voltage applications. For low-resistance-grounded systems (e.g., between 200 A to 400 A), ground-fault currents may not be high enough to trip the MCCBs or to open fuses in a timely fashion, particularly for larger motors.

10.4.2.3 High-resistance-grounded systems

For high-resistance-grounded systems, where the fault current is usually 5 A to 10 A range, no individual motor ground-fault protection is generally provided. Instead, an alarm at the grounding resistor signals that a ground fault has occurred. A ground pulsed signal is used to locate the fault. The faulted circuit is then manually cleared. Caution should be used when selecting conductor insulation materials and ratings for use on high-resistance-grounded systems, particularly on smaller conductors (e.g., size 10 and below). Zone selective interlock (ZSI) tripping is another type of ground-fault protection that permits the first ground fault to be alarmed only, with rapid tripping following a ground fault on a different phase. This trip rating illustrates the advantage of high-resistance grounding when operation may continue during the presence of the first ground fault. Removal of the first ground fault is important, however, in order to prevent escalated damage from a second ground fault on a different phase. The MCCBs used in high-resistance-grounded systems should be rated for line-to-line voltage (e.g., 480 V not 480/277 V for a 480 nominal system voltage). (Also the single-pole interrupting rating should be checked to clear the second fault on a different phase: ground as well as line-to-ground faults on two separate phases, one on each side of the breaker. See Gregory [B2].)

10.4.3 Low-voltage motor stator winding overtemperature

The purpose of stator winding overtemperature protection is to detect excessive stator winding temperature prior to the occurrence of motor damage. In low-voltage motors in noncritical services, the temperature sensors are normally wired to trip the motor control circuit and open the contactor.

10.4.3.1 Thermostat winding overtemperature devices

Thermostats are the most common type of stator temperature sensors installed in three-phase industrial service 460 V motors from 11 kW through 150 kW. Many manufacturers wind the stators with the devices installed and cut off the leads if a customer does not specify the protection. Thermostat devices are bimetallic, normally closed devices that operate at one fixed temperature. They are normally wired in series with the control circuit at 120 V. These devices are normally sealed from the atmosphere, but are not rated as hermetically sealed for hazardous NEC Class 1 Division 2 areas.

 Copyright © 2001 IEEE. All rights reserved.

Copyright The Institute of Electrical and Electronics Engineers, Inc.
Provided by IHS under license with IEEE
No reproduction or networking permitted without license from IHS Not for Resale

10.4.3.2 Thermistor winding overtemperature devices

Thermistors are used to operate relays for either alarm or trip functions, or both. They have resistance characteristics that are nonlinear with respect to temperature and thus are not used to indicate temperature. Two types of thermistors exist:

a) *Positive temperature coefficient*. The resistance of a positive temperature coefficient thermistor increases with temperature. An open circuit in this thermistor appears as a high-temperature condition and operates the relay. This arrangement is fail-safe.
b) *Negative temperature coefficient*. The resistance of a negative temperature coefficient thermistor decreases as temperature increases. An open circuit in this thermistor appears as a low-temperature condition and does not cause relay operation.

10.4.3.3 Resistance temperature detector (RTD) winding overtemperature devices

RTDs are not normally installed in low-voltage motors unless the service is critical. In those cases, the RTDs are usually connected into a device that provides an alarm-only function. The most common practice is to install six RTDs, two per phase, of the 120 Ω platinum elements. More information on RTDs is contained in 10.5.3.1.1.

10.4.4 Low-voltage motor undervoltage protection

Undervoltage protection is used to protect motors from several damaging conditions: low voltage due to a voltage sag, automatic reclosing or automatic transfer, and power restoration. In a voltage sag, the motor draws more current than normal and has unusually high heating. Excessive heating can be a serious problem in hazardous areas where the motor must stay within its T marking.

When the supply voltage is switched off during automatic reclosing and transfers, the motors initially continue to rotate and retain an internal voltage. This voltage decays with motor speed and internal flux. If the system voltage is restored out of phase with a significant motor internal voltage, high inrush can occur. Such current can damage the motor windings or produce torques damaging to the shaft, foundation, drive coupling, or gears. IEEE Std C37.96-2000 discusses considerations for the probability of damage occurring for various motor and system parameters.

When power is restored after an outage, the starting sequence should be programmed so that all motors on the system are not starting simultaneously. This step is important for the generating equipment, as well as for transformers and conductors. Undervoltage devices are not normally installed on essential loads such as motors for fire pumps.

10.4.4.1 Undervoltage relays

Low-voltage undervoltage relays are typically electronic devices that monitor all three phases. These devices can be furnished with a time delay to trip, a time delay to restart, or instantaneous for trip and restart. Usually, the designer sets the device at 85% of line voltage

Copyright © 2001 IEEE. All rights reserved.

Copyright The Institute of Electrical and Electronics Engineers, Inc.
Provided by IHS under license with IEEE
No reproduction or networking permitted without license from IHS
Not for Resale

with a time delay off and a time delay for restart. Normally, the undervoltage relays are wired into the motor control circuit to open the contactor.

10.4.4.2 Undervoltage sensors for circuit breakers

Some MCCBs have an undervoltage sensor adapter that trips the circuit breaker on a low-voltage condition. The circuit breakers are reset manually. Where automatic restart is necessary, this method should not be used. These sensors may not be as reliable as separate undervoltage relays, and this factor should be considered when designing the circuit.

10.5 Medium-voltage motor protection

Conventionally, large motors drive the main process equipment and would operate continuously for the length of the batch process. Because of this infrequent starting, medium-voltage circuit breakers are often used to apply the power to the motors. Medium-voltage motor voltage ratings are 2300 V, 4000 V, 4600 V, 6600 V, and 13 200 V per Part 20.12 of NEMA MG 1-1998. When a motor must be started frequently, it may be necessary (even economical) to use motor contactors in a combination controller with a current-limiting fuse or circuit breaker because of the greater life of the contactors. Care should be exercised when applying fused contactors on solidly grounded neutral systems because the contactor is incapable of interrupting high fault currents, especially ground faults. As a result, ground-fault relays and differential relays may not be safely applied. The risks could be minimized by having the manufacturer perform short-circuit tests on the combination controller to confirm its safe performance to interrupt the fault on the system to which it is applied. In this subclause, the text refers to the use of circuit breakers for the main device to both close and open the motor circuit. The text describing combination controllers for medium-voltage motors is generally similar to low-voltage combination controllers discussed previously.

In principle, the protection of medium-voltage motors is similar to low-voltage motors, but the requirements are more demanding. Being closer to the utility source, medium-voltage motors are more susceptible to voltage sags and surges, reclosing, and higher available fault levels. Because of the higher bus voltage and load currents, instrument transformers are used to reduce these currents to lower values, which can be used with protective relays, described in Chapter 4. The most common instrument transformer secondary ratings are 120 V for voltage transformers (VTs) and 5 A for CTs, described in Chapter 3. The circuit breakers [i.e., air, sulfur hexafluoride (SF_6), vacuum], instrument transformers, and protective relays are mounted in switchgear.

10.5.1 Medium-voltage motor overcurrent protection

In Figure 10-6, Figure 10-7, and Figure 10-8, some techniques illustrate different approaches applied to large motors. The accelerating curve has been shown slightly differently in each case to demonstrate that no one curve is accepted as a standard, and the motor accelerating curve should be provided by the motor or equipment supplier before setting the relays. High-inertia motors often take a much longer time to accelerate and, without proper protection, could lead to nuisance tripping. In addition, a low-voltage condition can also lead to a longer

 Copyright © 2001 IEEE. All rights reserved.

Copyright The Institute of Electrical and Electronics Engineers, Inc.
Provided by IHS under license with IEEE
No reproduction or networking permitted without license from IHS Not for Resale

accelerating time, thus necessitating careful selection of the type of overcurrent relays and their settings. A good practice for these motors is to request motor acceleration curves that are plotted for the cases of 100% and 80% actual motor starting voltages. Under 10.5.2.1, some techniques are shown on how to resolve this protection. In some cases, relaying may not adequately solve the problem, and a turning gear motor has been applied to start the large inertia motor in at least one case. This latter concept is expensive and is not a recommendation.

In Figure 10-5, a NEMA Design A or Design B motor curve is shown with protection for starting and running easily made using a Device 51, a time-overcurrent relay element with inverse or very inverse characteristics. Within the overcurrent relay is a second element, a Device 50, which operates without delay to protect against a short circuit. Normally three overcurrent relays are used, each phase relay supplied from its own CT. Some designers use only two of the three relays for overcurrent protection, and set Device 51 of the third relay relatively low (i.e., 110% to 120% of the full-load current) to alarm on an overload condition. Codes may not permit this practice in some cases, and redundancy is lost during relay testing. In this latter scheme, the two protective phase relays could be set for extreme overcurrent conditions at 125% to 140% of the full-load current.

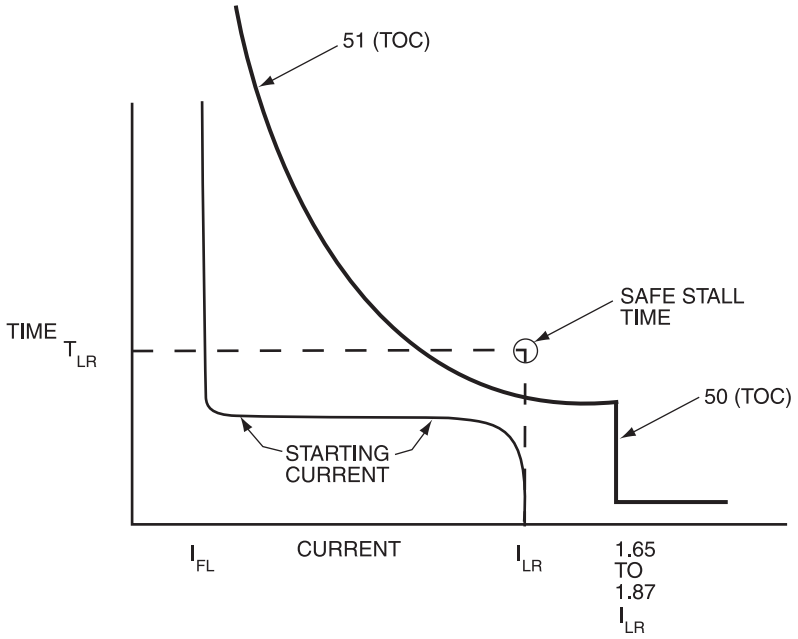

Figure 10-5—Conventional overcurrent relay protection of motor

In Figure 10-6, protection for a high-inertia motor allows for the longer accelerating time. Whereas a conventional motor reaches rated speed within 10 s to 15 s, a high-inertia motor may take 30 s to 40 s. As a result, little time difference exists between the accelerating current curve and the motor thermal limits. Several approaches are available, as shown in Figure 10-6 and Figure 10-7, and an impedance method is shown in Figure 10-8. In Figure 10-6,

Copyright © 2001 IEEE. All rights reserved.

Copyright The Institute of Electrical and Electronics Engineers, Inc.
Provided by IHS under license with IEEE
No reproduction or networking permitted without license from IHS
Not for Resale

Device 51 has long-time inverse or very inverse characteristics, set above the accelerating current. (Definite time delay is another term to describe this element.) Device 50 (HDO) is a high dropout element that rapidly resets when the starting current drops to a magnitude of 85% to 90% of the set current without delay. For starting, a time delay of less than 1 s occurs in order to permit the Device 50 (HDO) to be set at 1.15 of locked-rotor current. This delay prevents false trips due to the asymmetrical starting currents, yet provides short-circuit protection after the time delay. A second Device 50 is set at approximately two times the locked-rotor current to protect against short circuits during starting.

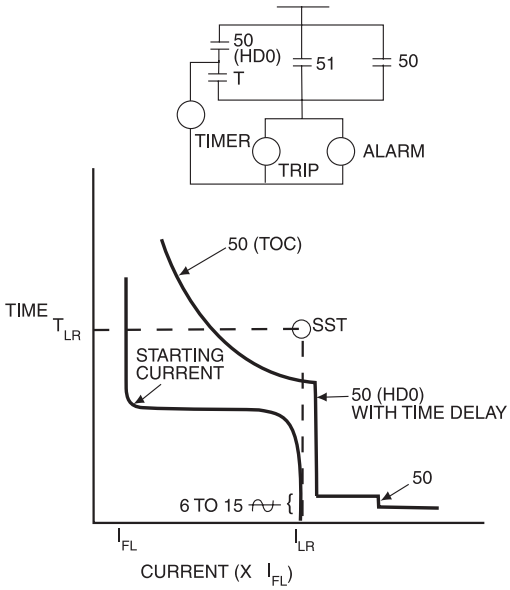

Figure 10-6—Protection of high-inertia motor

Figure 10-7 illustrates a second method for protecting a high-inertia motor. This approach also uses two Device 50 elements per phase. The conventional Device 50 is set in the normal way to protect against short circuits. The second Device 50 is used in conjunction with the Device 51 overcurrent element to block tripping by the Device 51 for overcurrents below the Device 50 setting. This scheme offers an overload alarm, while allowing the motor to continue operating unless the actual overcurrent exceeds a high setting. The use of this scheme is dependent upon the operating philosophy of the facility. Large motors should be specified with thermistors or RTDs buried in their windings for high-temperature detection, although temperature changes are generally slower to develop than overcurrent increases. Actual faults within the windings would be detected faster by the overcurrent differential relay or a sensitive ground-fault current relay scheme.

Figure 10-8 represents a scheme that relies upon the characteristics of a Device 21 (i.e., impedance distance relay) to permit tripping if the high-inertia motor does not accelerate to a certain speed within a fixed period. Upon energization of the motor circuit, the locked-rotor current is primarily inductive, as a blocked motor could easily be considered a transformer with shorted secondary windings. As the motor accelerates, the current decreases from a

Copyright © 2001 IEEE. All rights reserved.

--`,,`-`-`,,`,,`,`,,`---

Copyright The Institute of Electrical and Electronics Engineers, Inc.
Provided by IHS under license with IEEE
No reproduction or networking permitted without license from IHS
Not for Resale

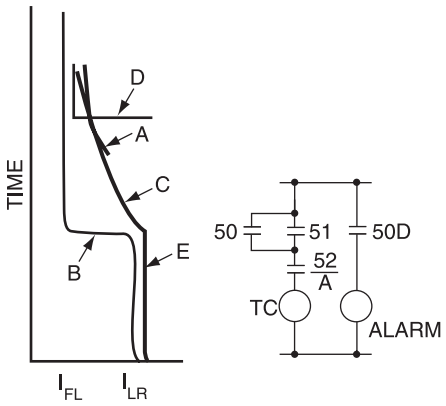

A – ALLOWABLE HEATING CURVE
B – STARTING CURRENT
C – 51 – LONG TIME OC
D – DEFINITE TIME
SET 120% FL
E – INVERSE INST 50

Figure 10-7—Alternative method of protecting a high-inertia motor

subtransient to a transient value, and the power factor and measured impedance increase. Used in conjunction with the Device 21 is either an overcurrent relay (Device 51) or an overvoltage relay (Device 59), which operates as a timing device in this case. This scheme guards against a stalled motor although other schemes exist, such as zero-speed devices used with timers. Figure 10-9 illustrates how the locked-rotor protection functions below the safe stall time.

10.5.2 Fault protection

10.5.2.1 Motor overcurrent differential relay (Device 87)

Motor overcurrent differential protection measures the current flow into a load and compares it to the current measured on the neutral side of the motor. A current difference is detected as a fault. These schemes can be technically applied to any motor load, but often are applied to large or critical motors only where damage could be costly or replacement difficult. By detecting faults at a low level, damage may be confined to windings solely. Three general recommendations for applying differential overcurrent protection are as follows:

a) With all motors 750 kW and above used on ungrounded systems.
b) With all motors 750 kW and above used on grounded systems where the ground-fault protection applied is not considered sufficient without differential protection to protect against phase-to-phase faults.
c) With smaller motors, especially at voltages above 2400 V, although justifying differential protection for large motors (i.e., 1900 kW and above) is easier.

Copyright © 2001 IEEE. All rights reserved.

Copyright The Institute of Electrical and Electronics Engineers, Inc.
Provided by IHS under license with IEEE
No reproduction or networking permitted without license from IHS
Not for Resale

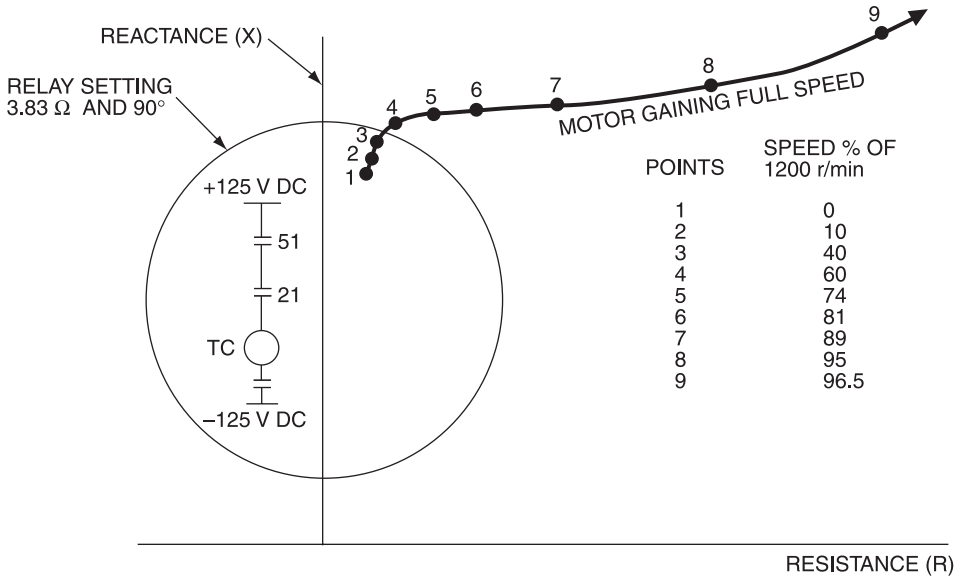

Figure 10-8—Protection of high-inertia motor using an impedance relay

10.5.2.1.1 Conventional phase differential overcurrent relay

A conventional phase differential overcurrent relay is used to sense low-level phase faults and to quickly remove the motor circuit before extensive damage develops. This scheme uses six identical CTs (i.e., one pair for each phase) and three relays (i.e., one per phase). The CTs should be sized to carry full-load current continuously and to not saturate during an external or internal fault (see Figure 10-10). The currents from each pair of CTs circulate through the relay-restraining windings under normal (i.e., no-fault) conditions. For a fault in the motor windings or in the cable, the CT secondary currents have different magnitudes and/or polarities, and the differential current from each CT adds to the other and operates the Device 87 to trip the motor circuit breaker. While sometimes applied to delta-connected motors, this scheme is usually used with wye-connected motors. (Wye-connected motors are much more common than delta-connected ones in the larger horsepower ratings.) With the wye-connected motor, three of the CTs are normally located at the starter (or motor switchgear) and the other three in the three phases at the motor winding neutral.

10.5.2.1.2 Self-balancing differential using window CTs

Three window (or toroidal) CTs are normally installed at the motor. One CT per phase is used with the motor line, and neutral leads of one phase are passed through it so that the flux from the two currents normally cancels each other in the CT. A winding phase-to-phase or phase-to-ground fault results in an output from the CTs of the associated phases. That current operates the associated relays (see Figure 10-11).

Copyright © 2001 IEEE. All rights reserved.

Copyright The Institute of Electrical and Electronics Engineers, Inc.
Provided by IHS under license with IEEE
No reproduction or networking permitted without license from IHS
Not for Resale

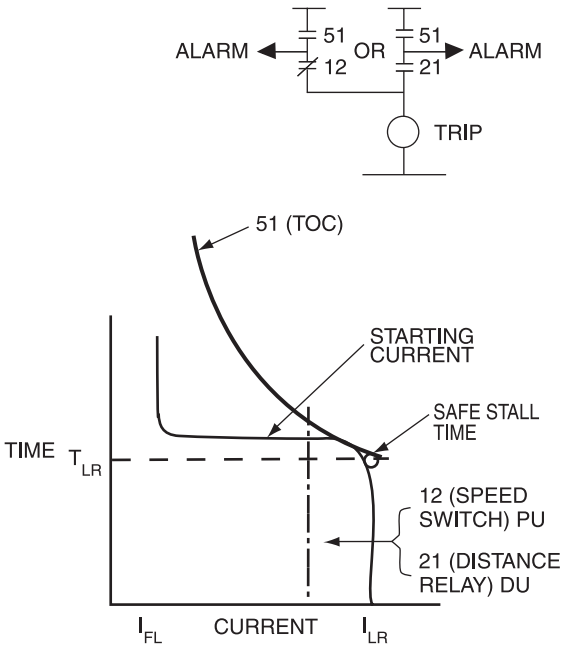

Figure 10-9—Schematic of locked-rotor protection of Figure 10-8

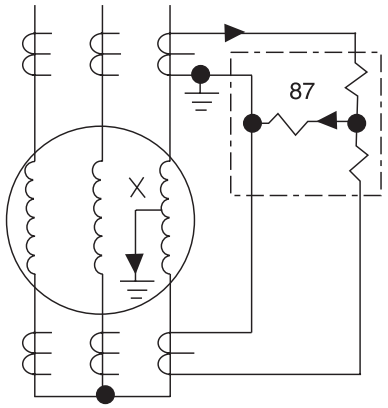

Figure 10-10—Conventional phase differential protection using three percentage differential relays (one shown)

Copyright © 2001 IEEE. All rights reserved.

Copyright The Institute of Electrical and Electronics Engineers, Inc.
Provided by IHS under license with IEEE
No reproduction or networking permitted without license from IHS
Not for Resale

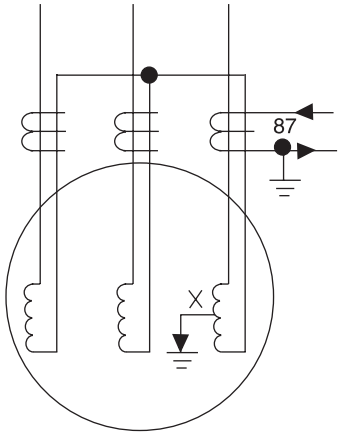

Figure 10-11—Self-balancing differential protection (one relay shown)

The CTs and relays would normally be the same as the CTs and relays used for zero-sequence instantaneous ground overcurrent protection (see 10.5.2.3.2) with the relay set between 0.25 A and 1.0 A pickup. Therefore, this differential scheme usually has a lower primary pickup in amperes than the conventional differential scheme because the CT ratio is usually greater with the conventional scheme. This differential scheme has a slight advantage over the scheme in Figure 10-10 in detecting ground faults. For motors installed on grounded systems this difference is significant because most faults begin as ground faults. The usual objective of motor-fault protection is to remove the fault before the stator iron is significantly damaged.

Application problems have occurred with this scheme when the available fault current is very high and when high-speed balanced-core differential protection signals to trip the motor starter before the current-limiting fuses clear the fault and thus protect the starter. Because the starter has such a low fault rating, some engineers have slowed down the operation of the relay, by delay or different relay type, in order to distinguish between a developing low-level fault and a direct short.

With the CTs located at the motor, this scheme does not detect a fault in the cables supplying power to the motor. A fault in these cables would normally be detected by the overcurrent protection. For large motors, coordinating the supply phase-overcurrent protection with the motor overcurrent protection is often a problem. The presence of motor differential protection is sometimes considered to make this coordination less essential. In this regard, the conventional differential is better than the self-balancing differential because the motor cables are also included in the differential protection zone. Hence coordination between the motor differential and supply phase-overcurrent relays is complete.

As with zero-sequence ground-fault overcurrent protection, testing the overall CT and relay combinations is important during commissioning. Current in a test conductor should be

Copyright © 2001 IEEE. All rights reserved.

--`,,`-`-`,,`,,`,`,,`---

Copyright The Institute of Electrical and Electronics Engineers, Inc.
Provided by IHS under license with IEEE
No reproduction or networking permitted without license from IHS
Not for Resale

passed through the window of each CT. Because normally the relays do not carry current, an open circuit in a CT secondary or wiring to a relay can be discovered by this overall testing.

10.5.2.2 Split winding current unbalance (Device 87)

10.5.2.2.1 Purpose

The purpose of the split winding current unbalance device is to quickly detect low-magnitude fault conditions. This protection also serves as backup to instantaneous phase-overcurrent and ground-fault overcurrent protection. This protection is normally only applied to motors having two (or three) winding paths in parallel per phase (see Figure 10-12).

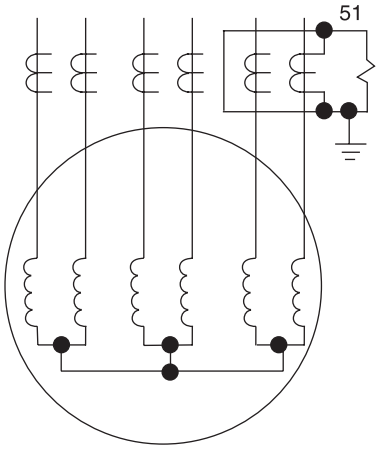

Figure 10-12—Split-phase motor overcurrent protection used with two paths per phase (one relay shown)

10.5.2.2.2 Arrangement of CTs and relays

The usual application is with a motor having two winding paths in parallel per phase. The six line leads (i.e., two per phase) of the motor are brought out, and one CT is connected in each of the six leads. The primary current rating of the CTs should be chosen to carry full-load current.

The CTs may be installed at the motor. It may be convenient, however, to use six cables to connect the motor to its starter (or switchgear), and in this case the CTs can be located in the starter.

The currents from each pair of CTs, associated with the same phase, are subtracted, and their difference is fed to a short-time inverse time-overcurrent relay. Three of these relays are required (i.e., one per phase), and each is set at 1.0 time dial and between 0.5 A and 2.5 A.

Copyright © 2001 IEEE. All rights reserved.

Copyright The Institute of Electrical and Electronics Engineers, Inc.
Provided by IHS under license with IEEE
No reproduction or networking permitted without license from IHS
Not for Resale

The relay should be set above the maximum current unbalance that can occur between the two parallel windings for any motor-loading condition.

10.5.2.2.3 Evaluation of split winding current unbalance protection

The following factors should be considered when evaluating split winding current unbalance protection:

a) Total cost would be somewhat less than conventional phase differential and more than self-balancing differential.
b) The primary pickup current for this protection would be about half of the primary pickup current of conventional phase differential because both schemes require the CT primaries to be rated to carry normal load currents. Self-balancing differential would usually have a lower primary pickup in amperes.
c) This protection has a slight time delay compared to the phase differential schemes.
d) When the CTs are located in the motor starter, split winding protection has the same advantage over self-balancing differential as does conventional phase differential, namely, it detects a fault in the motor cables and may facilitate coordination with the supply feeder overcurrent relays (see 10.5.2.1.2).
e) The salient feature that this protection provides, and no other motor protection has, is the ability to sense short-circuited winding turns. The number of turns that must be short-circuited before detection occurs depends upon the motor winding arrangement, the relay pickup, and CT ratio. An analysis of the specific motor winding would be required to determine the worthiness of this feature. Short-circuited turns could cause a ground fault, which could be detected by the self-balancing differential scheme before this split winding protection would sense the short-circuited turns condition.
f) This protection could be applied to a motor with four winding paths in parallel per phase by grouping them as two pairs as if only two paths in parallel existed (i.e., six CTs and three relays are used).
g) A split differential scheme is often effectively used where one CT is in one of the parallel paths and the other CT sees the total phase current.

10.5.2.2.4 Application of split winding protection

Split winding protection is rarely used, but is feasible to apply to important motors rated above 3700 kW that have two or four winding paths in parallel per phase.

10.5.2.3 Ground-fault protection

10.5.2.3.1 Purpose

The purpose of ground-fault protection is to protect motors by detecting ground-fault conditions with no intentional delay and to be certain that the unbalance current represents a true ground fault (i.e., not due to asymmetry in the primary current or to CT saturation). Following this detection, the protection may trip the motor circuit or only alarm, depending upon the voltage and facility operating practice.

Copyright © 2001 IEEE. All rights reserved.

Copyright The Institute of Electrical and Electronics Engineers, Inc.
Provided by IHS under license with IEEE
No reproduction or networking permitted without license from IHS Not for Resale

10.5.2.3.2 Instantaneous ground-fault protection

Using a zero-sequence (or window) CT that has been designed for instantaneous ground-fault protection and tested with a specific ground-fault relay is recommended (see Figure 10-13). For medium-voltage applications, the power system should be resistance-grounded, and the Device 50G should be set to operate for a primary ground-fault current in the range of 10 A to 30 A. A suitable time delay should be added when the installation has surge protection on the motors.

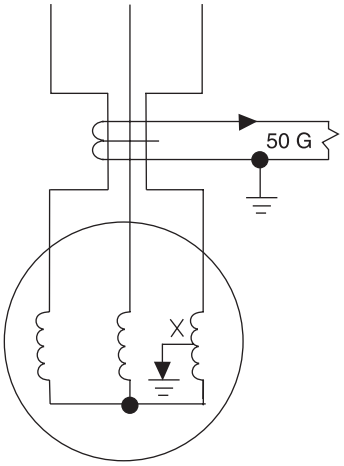

Figure 10-13—Ground-fault overcurrent protection using window CT

10.5.2.3.3 Time-overcurrent ground-fault protection

Many installations have surge protection at the motor terminals, and a surge discharge through an arrester could cause an instantaneous relay to have a false trip. To avoid this event, a Device 51G should be applied, in place of the Device 50G in Figure 10-13, and set to trip within a few seconds of the fault-sensing pickup.

10.5.2.3.4 Installation of cable for ground-fault protection

The following precautions should be observed in applying the relay and zero-sequence CT and in installing the cables through the CT:

a) If the cable passes through the CT window and terminates in a pothead on the source side of the CT, the pothead should be mounted on a bracket insulated from ground. Then the pothead should be grounded by passing a ground conductor through the CT window and connecting it to the pothead.

b) If metal-covered cable passes through the CT window, the metal covering should be kept on the source side of the CT, insulated from ground. The terminator for the metal

Copyright © 2001 IEEE. All rights reserved.

Copyright The Institute of Electrical and Electronics Engineers, Inc.
Provided by IHS under license with IEEE
No reproduction or networking permitted without license from IHS
Not for Resale

covering may be grounded by passing a ground conductor through the CT window and then connecting it to the terminator.

c) Cable shields should be grounded by passing a ground conductor through the CT window and then connecting it to the shields per Figure 8-9b.

d) The overall CT and ground relay scheme should be tested by passing current in a test conductor through the CT window. Because normally no current exists in the relay, an open circuit in the CT secondary or wiring to the relay can be discovered by this overall test.

10.5.2.3.5 Residually connected CTs and ground-fault relay

Applications have been made using the residual connection from three CTs (i.e., one per phase) to supply the relay. This arrangement is not ideal because high phase currents (e.g., due to motor starting inrush or phase faults) may cause unequal saturation of the CTs and produce a false residual current. As a result, undesired tripping of the ground relay may occur, and the production or process may be jeopardized. For this reason, a Device 50N is not recommended in the residual connection. A Device 51N installed in the residual connection would be more appropriate for these installations.

10.5.2.3.6 Selection of resistor for low-resistance system grounding

The purpose of resistance grounding is to provide current sufficient for protective relays to operate upon detection of a ground fault, but low enough to limit the magnitude and resulting damage to the motor. (In mine distribution systems, the objective is to limit equipment-frame-to-earth voltages for safety reasons.) However, the ground-fault current should not be so limited that the windings near the neutral end are unprotected. In the past, protection within 5% to 10% of the neutral has often been considered adequate. Selection of the ground resistor should also consider the number of steps in ground-fault overcurrent protection coordination (see Love [B5] and [B6]). On this basis, the ground resistor chosen for the system neutral grounding normally limits the ground-fault current within the range of 400 A to 2000 A. However, some companies prefer neutral ground-fault current limited to 200 A to 800 A; this difference emphasizes the need to coordinate the protection of a system. A 10 s time rating is usually chosen for the resistor.

To avoid excessive transient overvoltages, the resistor should be chosen so that the following zero-sequence impedance ratio is achieved:

R_0 / X_0 should be equal to or greater than 2.

A more detailed discussion of the selection of the resistor can be found in Chapter 8.

10.5.3 Monitors

In addition to protection against failures due to electrical causes, advances in instrumentation and techniques have enabled protective methods that monitor machinery characteristics and, as a result, can detect trends of equipment failures during the incipient stage. This

 Copyright © 2001 IEEE. All rights reserved.

Copyright The Institute of Electrical and Electronics Engineers, Inc.
Provided by IHS under license with IEEE
No reproduction or networking permitted without license from IHS Not for Resale

development has manifested into monitors, sensors, and detectors that use inputs not related directly to measured electrical quantities of voltage and current.

10.5.3.1 Stator winding overtemperature

The purpose of stator winding overtemperature protection is to detect excessive stator winding temperature prior to the occurrence of motor damage. This protection is often arranged just to alarm on motors operated with competent supervision. Sometimes two temperature settings are used, the lower setting for alarm, the higher setting to trip.

10.5.3.1.1 RTDs

Six RTDs should be specified in motors rated 370 kW and above. They are installed in the winding slots when the motor is being wound. The six are spaced around the circumference of the motor core to monitor all phases. The most commonly used type is 120 Ω platinum with three leads. The RTD element resistance increases with temperature, and Wheatstone bridge devices are used to provide temperature indication or contact operation, or both.

For safety, RTDs should be grounded, and that ground in turn places a ground on the Wheatstone bridge control. Therefore, the Wheatstone bridge control should not be operated directly from a switchgear dc battery because these dc control schemes should normally operate ungrounded in order to achieve maximum reliability. However, loss of ac control voltage due to a blown fuse could remove protection, unless the null point is near the trip setting at which time it could cause tripping. An open RTD or its circuit appears as an infinite resistance and causes a false trip because this corresponds to a very high temperature.

The following arrangements of RTDs are frequently used:

a) Monitor all six leads continuously with alarm points and time-delayed higher trip points using one monitor or a programmable logic controller.
b) Monitor six leads with alarm points and have a manual trip.
c) Determine which detector normally runs hottest and permanently connect a trip relay to it. Use one temperature indicator and a selector switch to manually monitor the other five detectors.
d) Use selector switch and combination indicator and alarm relay. Precaution: An open circuit in the switch contact will cause a false trip. Bridging contacts are required.
e) Use selector switch and indicator only.
f) Use one, two, or three (i.e., one per phase) alarm relays; and use one, two, or three (i.e., one per phase) trip relays set at a higher temperature.

10.5.3.1.2 Thermocouples

Thermocouples are used to indicate temperatures for alarm and trip functions, in a similar manner to RTDs. However, an open circuit in the thermocouple leads does not cause a trip because the output appears as a low-temperature condition. The output from thermocouples is compatible with conventional temperature-monitoring and data-logging schemes.

Copyright © 2001 IEEE. All rights reserved.

Copyright The Institute of Electrical and Electronics Engineers, Inc.
Provided by IHS under license with IEEE
No reproduction or networking permitted without license from IHS
Not for Resale

10.5.3.1.3 Thermistors

Thermistors are used to operate relays for alarm or trip functions, or both. They are not used to provide temperature indication. However, they are often combined with thermocouples, which provide indication, while the thermistor operates a relatively inexpensive relay. See 10.4.3.2 for further details.

10.5.3.1.4 Thermostats and temperature bulbs

Thermostats and temperature bulbs are used on some motors. For instance, thermostats are bimetallic elements and are used on random wound motors (460 V class) to detect failure to start. They are embedded in the end windings and provide a contact opening to trip the motor. Bulb temperature devices are used to provide measurement and trip contacts for bearing oil temperature in oil-lubricated bearings. See 10.4.3.1 for further details.

10.5.3.1.5 Application of stator winding temperature protection

Stator winding temperature protection is commonly specified on all motors rated 190 kW and above. RTDs are commonly specified in all motors rated 370 kW and above. In the following situations, the application of stator winding temperature protection should be considered:

a) Motors in high ambient temperatures or at high altitudes
b) Motors whose ventilation systems tend to become dirty and lose cooling effectiveness
c) Motors subject to periodic overloading due to load characteristics of the drive or process
d) Motors likely to be subjected to continuous overloading (within their service factor range) in order to increase production
e) Motors for which continuity of service is critical
f) Motors supplied from ASDs

10.5.3.2 Rotor overtemperature

10.5.3.2.1 Synchronous motors

Rotor winding overtemperature protection is available for brush synchronous motors, but is not normally used. One well-known approach is to use a Kelvin bridge chart recorder with contacts adjustable to the temperature settings desired. The Kelvin bridge uses field voltage and field current (from a shunt) as inputs and measures the field resistance in order to determine the field winding temperature.

10.5.3.2.2 Wound-rotor induction motor-starting resistors

Some form of temperature protection should be applied for wound-rotor induction motor-starting resistors on motors having severe starting requirements, such as long acceleration intervals or frequent starting. RTDs and other types of temperature sensors have been used in proximity to the resistors.

Copyright © 2001 IEEE. All rights reserved.

Copyright The Institute of Electrical and Electronics Engineers, Inc.
Provided by IHS under license with IEEE
No reproduction or networking permitted without license from IHS Not for Resale

10.5.3.3 Mechanical and other protection

10.5.3.3.1 Motor bearing and lubricating systems

Various types of temperature sensors are used on sleeve bearings to detect overheating, such as RTDs, thermocouples, thermistors, thermostats, and temperature bulbs. Excessive bearing temperature may not be detected soon enough to prevent bearing damage. More serious mechanical damage to the rotor and stator may be prevented by tripping the motor before complete bearing failure. Thus, for maximum effectiveness, the following steps are recommended:

a) Use a fast-responding temperature sensor.
b) Locate the temperature sensor in the bearing metal where it is close to the source of overheating.
c) Use the temperature sensor for tripping instead of alarm; for some installations, use both alarm and trip sensors, the former having a lower temperature setting.
d) Provide alarm and trip devices on bearing lubricating systems to monitor
    1) Lubricating oil temperature, preferably from each bearing
    2) Bearing cooling water temperature, both temperature in and out
    3) Bearing lubricating oil flow and cooling water flow

In lieu of the flow-monitoring recommended in Item d) 3), a suitable arrangement of pressure switches is often used. However, flow monitoring is strongly recommended for important or high-speed machines.

Temperature sensors generally cannot detect impending failure of ball or roller bearings soon enough to be effective. Vibration monitors and detectors should be considered (see 10.5.3.4).

Protection to detect currents that may cause bearing damage should be considered for motors having insulated bearings.

10.5.3.3.2 Ventilation and cooling systems

Alarm and trip devices should be considered, as follows:

a) In motor ventilation systems
    1) To detect high differential pressure drop across air filters
    2) To detect loss of air flow from external blowers (In lieu of air flow monitoring, a suitable arrangement of pressure switches is often used; however, flow monitoring is preferable.)
b) With water-cooled motors, to monitor water temperature, flow, or pressure
c) With inert-gas-cooled motors, to sense pressure and temperature
d) For motors in hazardous areas, to detect gas

Copyright © 2001 IEEE. All rights reserved.

Copyright The Institute of Electrical and Electronics Engineers, Inc.
Provided by IHS under license with IEEE
No reproduction or networking permitted without license from IHS
Not for Resale

10.5.3.3.3 Liquid detectors

On large machines, liquid detectors are sometimes provided to detect liquid (usually water) inside the stator frame, e.g., because of a leak in the air cooler of a totally enclosed water- and air-cooled motor.

10.5.3.3.4 Fire detection and protection

For fire detection and protection, the following items should be considered:

a) Installation of suitable smoke and flame detectors to alert operators to use suitable portable fire extinguishers.
b) Installation of suitable smoke and flame detectors and an automatic system to apply carbon dioxide or other suppressant into the motor. Some old, large motors have internal piping to apply water for fire extinguishing. Possible false release of the water is a serious disadvantage.
c) Use of synthetic lubricating oil that does not burn, particularly for drives having large lubricating systems and reservoirs and for systems in hazardous atmospheres. Lubricating systems of gas compressors or hydrocarbon pumps should be kept separate from the motor to preclude combustibles and flammables from entering the motor through the oil system.

10.5.3.3.5 Partial discharge detectors

Partial discharge detectors are embedded in the windings. They show a pattern of frequencies that are normal for a motor. Abnormal patterns of corona indicate insulation damage. These detectors are normally installed on large motors (>7500 kW) used for critical service.

10.5.3.4 Vibration monitors and sensors

10.5.3.4.1 Purpose of vibration monitoring

Vibration monitoring has advanced from an important startup function to an effective tool during operation of the process. It increases safety and reliability and may reduce costs over the life of the plant. The three components of a vibration monitoring system are transducers, monitors, and machine diagnostic equipment, although many installations may not have permanent monitors and diagnostic systems (see Figure 10-14).

10.5.3.4.2 Transducers

Transducers are a critical part of a vibration monitoring system. Accurate machinery diagnostics depend upon reliable transducer signals. Two orthogonal, or *XY*, transducers should be installed at or near each bearing; and a phase reference probe, such as a once-per-turn event probe, should be installed on each shaft. This configuration provides diagnostic equipment with the information necessary to accurately indicate the vibratory motion. Transducers should be of rugged construction to better withstand the motor's environment. In general, if rotor-related malfunctions are anticipated (e.g., unbalance, misalignment, rubs),

Copyright © 2001 IEEE. All rights reserved.

--`,-`-`,,`,,`,`,,`---

Copyright The Institute of Electrical and Electronics Engineers, Inc.
Provided by IHS under license with IEEE
No reproduction or networking permitted without license from IHS Not for Resale

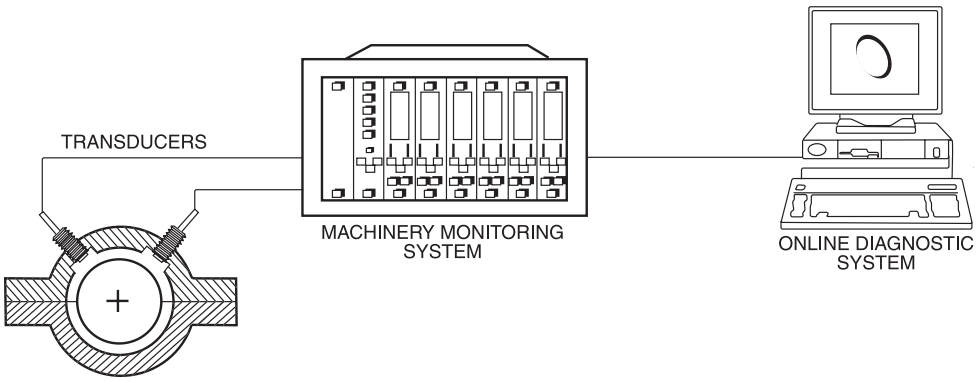

Reprinted with permission from Bentley-Nevada.

Figure 10-14—Vibration monitoring system

vibration transducers that observe the rotor should be preferred. If housing-related malfunctions are anticipated (e.g., piping strains, structural resonances), transducers mounted on the machine housing should be preferred.

10.5.3.4.2.1 Proximity transducers

On motors with fluid-film bearings, such as sleeve bearings, noncontacting proximity transducers (see Figure 10-15) provide the best information and should be preferred. Often on these motors, much of the rotor motion is not transmitted to the housing. Noncontacting proximity transducers accurately indicate displacement of the rotor relative to the housing. They have a broad frequency response, down to dc (i.e., 0 Hz) at the low end. The upper end frequency response is also high (up to 10 kHz), but useful application at high frequencies is limited because little measurable displacement occurs at high frequencies. This transducer can measure slow-roll and the shaft's average position within the bearing. For motors with rolling-element bearings, a special transducer can be applied to provide an earlier warning of bearing malfunctions than velocity transducers or accelerometers provide. Such motors have a high-gain, low-noise eddy-current proximity transducer that is installed in the bearing housing to observe the bearing outer race. Such transducers may be difficult to install in motors with tight clearances. See Figure 10-16 for a vibration limit curve.

10.5.3.4.2.2 Velocity transducers

Velocity transducers may be used on motors with rolling-element bearings where virtually all of the shaft motion is faithfully transmitted to the bearing housing. Velocity transducers are seismic devices that measure motion relative to free space, are useful for overall vibration measurement, and provide good frequency response in the mid-frequency range (i.e., 4.5 Hz to 1 kHz). This transducer is self-generating; no power source is required. Traditional velocity transducers are mechanical devices that suffer from a limited life span. Some

Copyright © 2001 IEEE. All rights reserved.

Copyright The Institute of Electrical and Electronics Engineers, Inc.
Provided by IHS under license with IEEE
No reproduction or networking permitted without license from IHS
Not for Resale

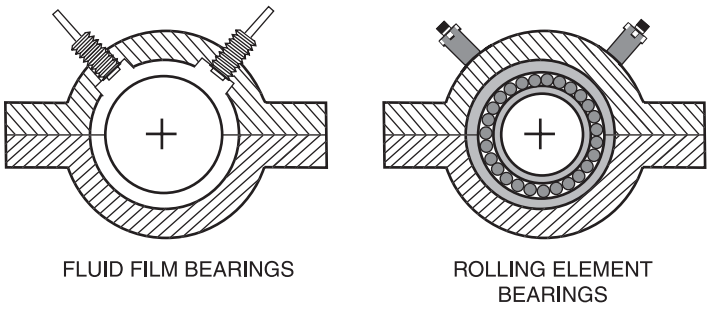

Reprinted with permission from Bentley-Nevada.

Figure 10-15—Typical proximity transducers

modern velocity transducers use a piezoelectric sensing element, do not suffer from this limitation, and are thus preferred. See Figure 10-17 for a vibration limit curve.

10.5.3.4.2.3 Accelerometers

Accelerometers are generally used on motors with rolling-element bearings where virtually all of the shaft motion is transmitted to the bearing housing. Accelerometers are useful for overall vibration measurements and have a broad frequency response. They are particularly useful for high-frequency measurements. An accelerometer is almost the only viable transducer at high frequencies (usually above 5 kHz). Motor vibration acceleration increases with frequency. Therefore, the acceleration unit of measurement is favored. However, at low frequencies, its usefulness is limited. Accelerometers are sensitive to the method of attachment and the quality of the mounting surface.

10.5.3.4.2.4 Vibration limits

API Std 541-1995 recommends limits for shaft and bearing vibrations, using noncontact vibration probes on hydrodynamic bearing motors operating at speeds equal to or greater than 1200 r/min. Examples of these limits are shown in Figure 10-16 and Figure 10-17 from API Std 541-1995.

10.5.3.4.3 Monitors

10.5.3.4.3.1 Monitors process and display transducer signals

Monitors should detect malfunctions in the transducer system and the transducer power supply. They should provide two levels of alarm and protect against false alarms. They should be constructed so that both the unprocessed and processed information is available to online and portable diagnostic equipment. Monitors designed to work with accelerometers or velocity transducers should be able to integrate the signal. See Figure 10-18 for sample monitoring system panels.

Copyright © 2001 IEEE. All rights reserved.

Copyright The Institute of Electrical and Electronics Engineers, Inc.
Provided by IHS under license with IEEE
No reproduction or networking permitted without license from IHS
Not for Resale

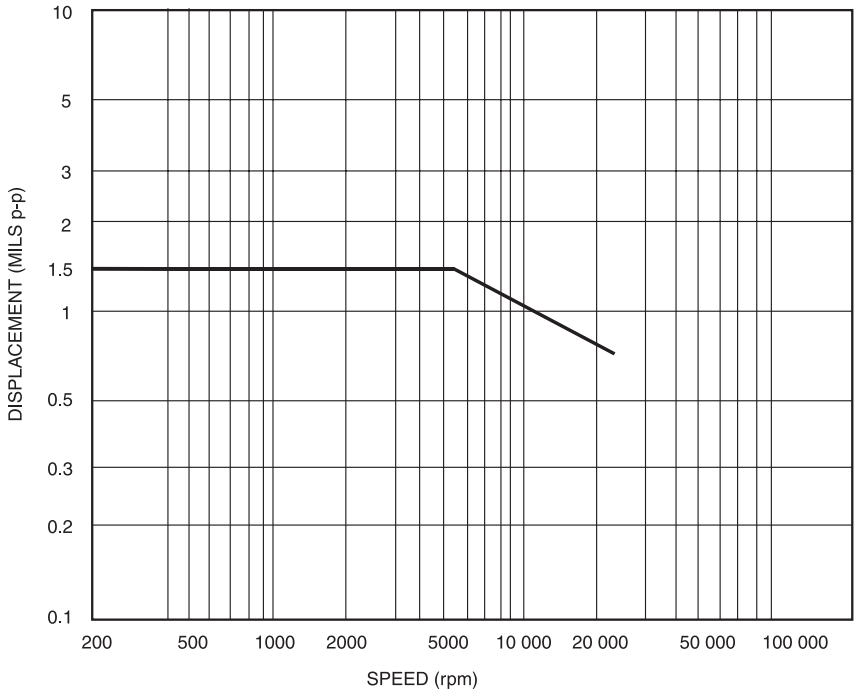

Reprinted with permission from Section 3.8 of API 541-1995.

NOTES
1—Vibration displacement at any frequency below running-speed frequency shall not exceed 0.1 mil or 20% of the measured unfiltered vibration displacement, whichever is greater.
2—Vibration displacement at any filtered frequency above running-speed frequency shall not exceed 0.5 mil peak to peak.
3—Vibration displacement filtered at running-speed frequency shall not exceed 80% of the unfiltered limit (runout compensated).

Figure 10-16—Shaft vibration limits (relative to bearing housing using noncontact vibration probes): for all hydrodynamic sleeve-bearing motors; with the motor securely fastened to a massive foundation

10.5.3.4.3.2 Continuous monitors

Motors that are critical to a process should be instrumented with continuous monitors, in which each monitor channel is dedicated to a single transducer. These monitors have the fastest response time and provide the highest level of motor protection.

10.5.3.4.3.3 Periodic monitors

General purpose motors can be instrumented with periodic monitors, in which each monitor channel is time-shared among many transducers. Consequently, the response time is slower than the continuous monitor.

Copyright © 2001 IEEE. All rights reserved.

Copyright The Institute of Electrical and Electronics Engineers, Inc.
Provided by IHS under license with IEEE
No reproduction or networking permitted without license from IHS
Not for Resale

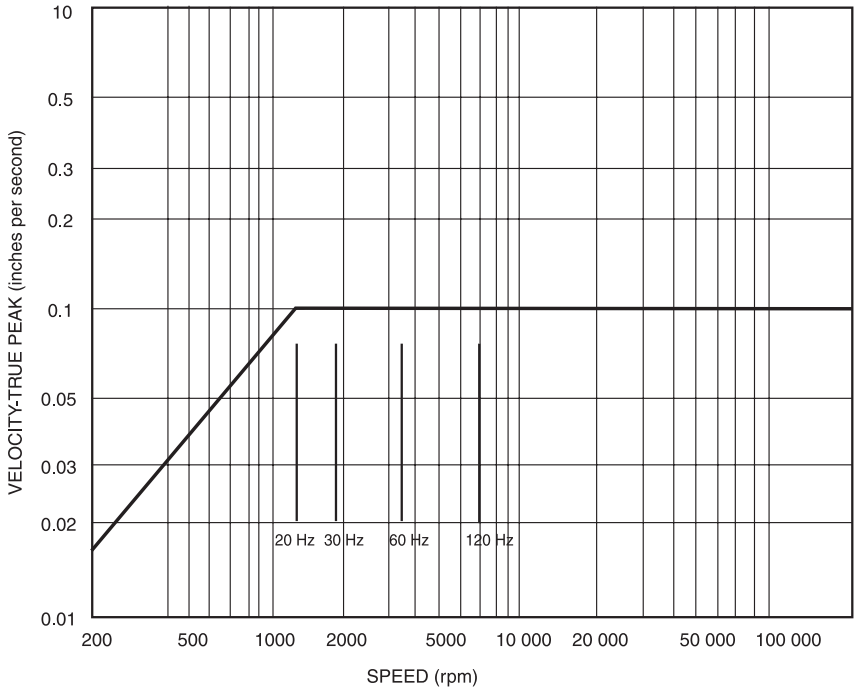

Reprinted with permission from Section 3.8 of API 541-1995.

NOTES
1—For unfiltered vibration limits, use the motor synchronous or maximum rotational speed in revolutions per minute.
2—For filtered limits, use vibration frequency in hertz.
3—Limits are for sleeve and antifriction bearing motors.

Figure 10-17—Bearing housing vibration limits: for sleeve and antifriction bearing motors; with the motor securely fastened to a massive foundation

10.5.3.4.3.4 Portable monitors

These monitors are widely used, primarily when a permanent monitoring system has not been justified. They are often used with infrared scanners, which determine whether bearings are overheating. The results are suitable for trending in condition-based maintenance programs. Other types of portable monitors include ultrasonic probes as part of their maintenance programs.

10.5.3.4.4 Diagnostic systems

10.5.3.4.4.1 Purpose of diagnostic systems

A diagnostic system is essential to effective machinery management. Being computerized, the system processes the data provided by the transducers and monitors into information that

Copyright © 2001 IEEE. All rights reserved.

Copyright The Institute of Electrical and Electronics Engineers, Inc.
Provided by IHS under license with IEEE
No reproduction or networking permitted without license from IHS
Not for Resale

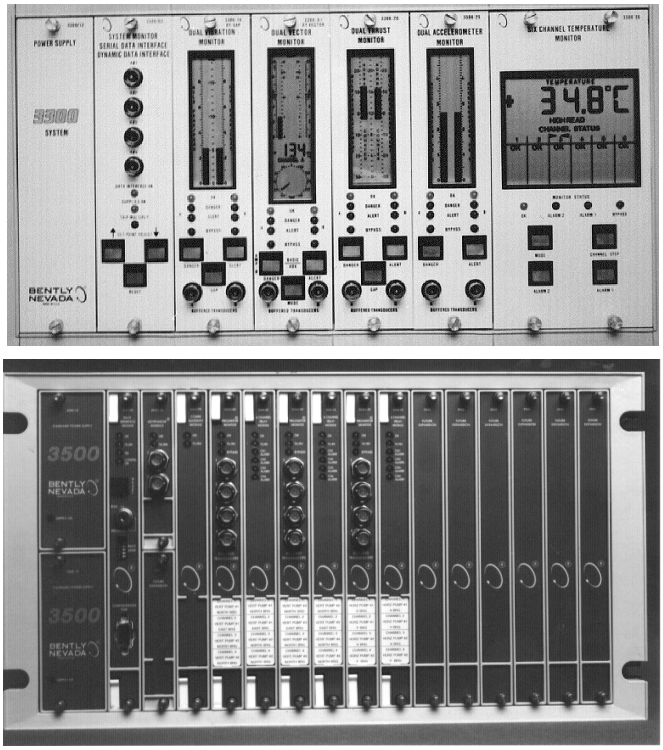

Reprinted with permission from Bentley-Nevada.

Figure 10-18—Monitoring system panels

can be used to make decisions regarding motor operation. A diagnostic system should be capable of simultaneously processing the data from two orthogonal transducers and a once-per-turn reference probe. It should display data in several plot formats, including orbit, timebase, Bode, polar, shaft centerline, trend, spectrum, and full spectrum. It should minimize operator involvement in motor configuration and data acquisition. It should display alarms for each monitored channel, trend its data over time, and archive its data to a storage medium (e.g., computer disk). It should integrate with computer networks and control systems.

10.5.3.4.4.2 Continuous online diagnostic systems

Motors that are critical to a process should be managed by a continuous online diagnostic system. Each channel in a continuous online diagnostic system is dedicated to the data from a single transducer and monitor channel. The diagnostic system processes machinery information online, and the data are continuously sampled and available to the host computer. A diagnostic system that processes steady-state information, during normal operation, is a minimum requirement; and the diagnostic system should be capable of processing data both during startups and shutdowns. It should be capable of displaying information in real time.

Copyright © 2001 IEEE. All rights reserved.

Copyright The Institute of Electrical and Electronics Engineers, Inc.
Provided by IHS under license with IEEE
No reproduction or networking permitted without license from IHS
Not for Resale

The continuous online diagnostic system is expensive and should be evaluated as any protection to determine its feasibility.

10.5.3.4.4.3 Periodic online diagnostic systems

General purpose motors can be managed by an online periodic diagnostic system. Each channel in a periodic system can be shared among many transducers. The data are periodically sampled and continuously available to the host computer.

10.5.3.4.4.4 Vibration limits

The vibration limits for motor shafts and bearing housings depend mainly on the operating speed. Typical limits are described in API Std 541-1995 and API Std 546-1997. The limits for filtered and unfiltered measurements are also described.

10.5.4 Synchronous motor protection

10.5.4.1 Damper winding protection

When a synchronous motor is starting, high currents are induced in its rotor damper winding. If the motor-accelerating time exceeds specifications, the damper winding may overheat and be damaged.

Several different electromechanical and electronic protective schemes are available. None of these schemes directly senses damper winding temperature. Instead, they try to simulate the temperature by evaluating two or more of the following quantities:

a) Magnitude of induced field current that flows through the field discharge resistor. This value is a measure of the relative magnitude of induced damper-winding current.
b) Frequency of induced field current that flows through the discharge resistor. This value is a measure of rotor speed and provides an indicator, therefore, of the increase in damper-winding thermal capability resulting from the ventilation effect and the decrease of induced current.
c) Time interval after starting.

10.5.4.2 Field-current failure protection

Field current may drop to zero or a low value when a synchronous motor is operating for several reasons:

— Tripping of the remote exciter, either motor-generator set or electronic. (Controls for these should be arranged so that the remote exciter will not drop out on an ac voltage dip.)
— Burnout of the field contactor coil. (The control should be arranged so that the field contactor does not drop out on an ac voltage dip.)
— Accidental tripping of the field. (Field-circuit overcurrent protection is usually omitted from field breakers and contactors in order to avoid unnecessary tripping.) The

 Copyright © 2001 IEEE. All rights reserved.

--`,,`-`-`,,`,,`,`,,`---

Copyright The Institute of Electrical and Electronics Engineers, Inc.
Provided by IHS under license with IEEE
No reproduction or networking permitted without license from IHS Not for Resale

field circuit is usually ungrounded and should have ground detection lights or relay applied to it to detect the first ground fault before a short circuit occurs (see 10.5.7.1).
— High-resistance contact or open circuit between slip ring and brushes due to excessive wear or misalignment.
— Failure of diode bridge on rotating diodes on a brushless exciter (detected by pullout relays).

Reduced field-current conditions should be detected for the following reasons:

— Overloaded motors pull out of step and stall.
— Lightly loaded motors are not capable of accepting load when required.
— Normally loaded motors, which do not pull out of step, are likely to do so on an ac voltage sag through which they might otherwise ride.
— The excitation drawn from the power system by large motors may cause a serious system voltage drop and endanger continuity of service to other motors.

A common approach to field-current failure protection is to use an instantaneous dc undercurrent relay to monitor field current. This application should be investigated to ensure that no transient conditions would reduce the field current and cause unnecessary tripping of this instantaneous relay. A timer could be used to obtain a delay of one or more seconds, or the relay could be connected to alarm only where competent supervising personnel are available.

Field-current failure protection is also obtained by the generator loss-of-excitation relay that operates from the VTs and CTs that monitor motor stator voltages and current. This approach has been done on some large motors (i.e., 3000 kW and above). This relay may also provide pullout protection (see 10.5.4.4)

10.5.4.3 Excitation voltage availability

Device 56 is a relay that automatically controls the application of the field excitation to an ac motor at some point in the trip cycle, probably more related to permissive control function. This device is a frequency relay, but others apply a simple voltage relay as a permissive start to ensure that voltage is available from the remote exciter. This approach avoids starting and then having to trip because excitation was not available. Loss of excitation voltage is not normally used as a trip; the field-current failure protection is used for this function.

10.5.4.4 Pullout protection (Device 55)

Pulling out of step is usually detected by one of the following relay schemes:

a) *A power factor relay (Device 55) responding to motor stator voltage and current VTs and CTs*. See 10.5.4.5 about the need to delay actuation of the pullout relay until the machine has a chance to pull into synchronism during a calculated period.
b) *An instantaneous relay connected in the secondary of a transformer whose primary carries the dc field current*. The normal dc field current is not transformed. When the motor pulls out of step, alternating currents are induced in the field circuit and

Copyright © 2001 IEEE. All rights reserved.

--`,,`-`-`,,`,,`,`,,`---
Copyright The Institute of Electrical and Electronics Engineers, Inc.
Provided by IHS under license with IEEE
No reproduction or networking permitted without license from IHS
Not for Resale

transformed to operate the pullout relay. This relay, while inexpensive, is sometimes subject to false tripping on ac transients accompanying external system fault conditions and also ac transients caused by pulsations in reciprocating compressor drive applications. Device 95 has sometimes been used to designate this relay.

c) *The generator loss-of-excitation relay (Device 40).*

10.5.4.5 Incomplete starting sequence (Device 48)

Incomplete starting sequence protection is normally a timer that blocks tripping of the field-current failure protection and the pullout protection during the normal starting interval. The timer is started by an auxiliary contact on the motor starter, and it times for a preset interval that has been determined during test starting to be slightly greater than the normal interval from start to reaching full field current. The timer puts the field-current failure and pullout protection in service at the end of its timing interval. This timer is often a de-energize-to-time device so that it is fail-safe with regard to applying the field-current failure and pullout protection.

10.5.4.6 Operation indicator for protection devices

Many types of the protective devices discussed in 10.5.4.1 through 10.5.4.5 do not have operation indicators. Separate operation indicators should be used with these protective devices.

10.5.5 Induction motor protection

For induction motor incomplete starting sequence protection (Device 48), wound-rotor induction motors and reduced-voltage starting motors should have a timer applied to protect against failure to reach normal running conditions within the normal starting time. Such a de-energized-to-time device is started by an auxiliary contact on the motor starter and times for a preset interval, which has been determined during test starting to be slightly greater than the normal starting interval. The timer trip contact is blocked by an auxiliary contact of the final device that operates to complete the starting sequence. This device would be the final secondary contactor in the case of a wound-rotor motor, or it would be the device that applies full voltage to the motor stator. Incomplete sequence protection should also be applied to part-winding and wye-delta motor-starting control and to pony motor and other reduced-voltage sequential start schemes.

10.5.6 Protection against excessive starting

The following protections against excessive starting are available:

a) *A timer*, started by an auxiliary contact on the motor starter, with contact arranged to block a second start until the preset timing interval has elapsed.

b) *Stator thermal overcurrent relays (Device 49)*, which provide some protection, with the degree of protection depending upon:
   1) The normal duration and magnitude of motor inrush
   2) The relay-operating time at motor inrush and the cool-down time of the relay

 Copyright © 2001 IEEE. All rights reserved.

--`,,`-`-`,,`,,`,`,,`---

Copyright The Institute of Electrical and Electronics Engineers, Inc.
Provided by IHS under license with IEEE
No reproduction or networking permitted without license from IHS Not for Resale

3) The thermal damper-winding protection on synchronous motors

4) Rotor overtemperature protection

c) *Multifunction motor protection relays* that have the capability to be programmed to limit the number of starts during a specific period. Large motors are often provided with nameplates giving their permissible frequency of starting.

10.5.7 Rotor winding protection

10.5.7.1 Synchronous motors

The field and field supply should not be intentionally grounded. While the first ground connection does not cause damage, a second ground connection probably will. Therefore, detecting the first ground is important. The following methods are used:

a) Connect two lamps in series between field positive and negative with the midpoint between the lamps connected to ground. A ground condition shows by unequal brilliancy of the two lamps.

b) Connect two resistors in series between field positive and negative with the midpoint between the resistors connected through a suitable instantaneous relay to ground. The maximum resistance to ground that can be detected depends upon the relay sensitivity and the resistance in the two resistors. This scheme does not detect a ground fault at midpoint in the field winding. If a varistor is used instead of one of the resistors, then the point in the field winding at which a ground fault cannot be detected changes with the magnitude of the excitation voltage. This approach is used to overcome the limitation of not being able to detect a field midpoint ground fault.

c) Apply low ac voltage between the field circuit and ground, and monitor the ac flow to determine when a field-circuit ground fault occurs. Before using one of these schemes, a determination should be made that a damaging ac current will not flow through the field capacitance to the rotor iron and then through the bearings to ground and thus cause damage to the bearings.

If a portion of the field becomes faulted, damaging vibration may result. Vibration monitors and sensors should be considered.

10.5.7.2 Wound-rotor induction motors

The protection for wound-rotor induction motors is similar to the protection described for synchronous motors, except the field is three-phase ac instead of a dc field (see Figure 10-19). Yuen, et al. [B13], describe some operating experience which confirms the effectiveness of this protection. Wound-rotor motor damage can result due to high-resonant torques from operation with unbalanced impedances in the external rotor circuit on speed-controlled motors. Protection to detect this fault is available although it has seldom been used.

Copyright © 2001 IEEE. All rights reserved.

Copyright The Institute of Electrical and Electronics Engineers, Inc.
Provided by IHS under license with IEEE
No reproduction or networking permitted without license from IHS
Not for Resale

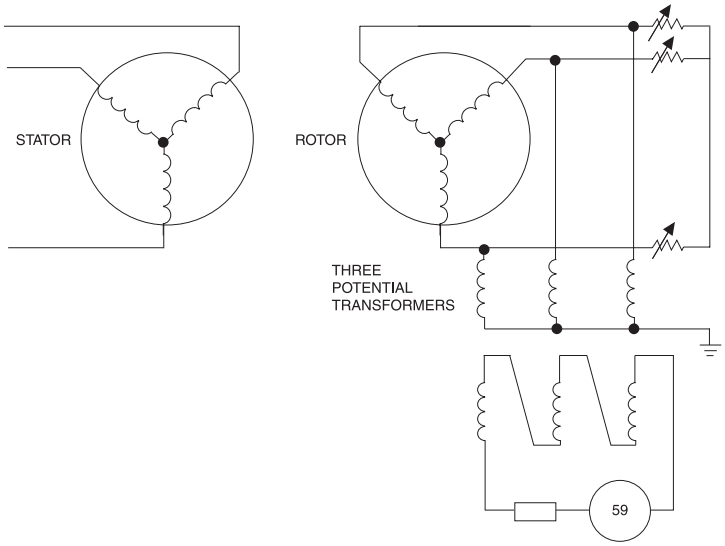

Figure 10-19—Rotor ground protection of wound-rotor motor

10.5.8 Lightning and surge protection

10.5.8.1 Types of protection

Surge arresters are often used, one per phase connected between phase and ground, to limit the voltage to ground impressed upon the motor stator winding due to lightning and switching surges. The need for this type of protection depends upon the exposure of the motor and its supply to surges. Medium-voltage cables have capacitance in their shields that can attenuate a surge. Like many protective applications, the engineer should evaluate importance and replacement costs, as well. A study is recommended.

The insulation of the stator winding of ac rotating machines has a relatively low impulse strength. Stator winding insulation systems of ac machines are exposed to stresses due to the steady-state operating voltages and to steep-front voltage surges of high amplitudes. Both types of voltages stress the ground insulation. The steep-front surges also stress the turn insulation. If the rise time of the surge is steep enough (i.e., 0.1 μs to 0.2 μs), most of the surge can appear across the first coil, the line-end coil; and its distribution in the coil can be nonlinear. This phenomenon can damage the turn insulation even though the magnitude of the surge is limited to a value that can be safely withstood by the ground wall insulation.

The surge arrester should be selected to limit the magnitude of the surge voltage to a value less than the motor insulation surge withstand [or basic impulse insulation level (BIL)].

Copyright © 2001 IEEE. All rights reserved.

--`,,`,,`-`-`,,`,,`,`,,`---

Copyright The Institute of Electrical and Electronics Engineers, Inc.
Provided by IHS under license with IEEE
No reproduction or networking permitted without license from IHS Not for Resale

The steepness of the surge wavefront at the motor terminals is influenced by two time constants:

— At the supply end, by the effect of system inductance, grounding resistance, and motor cable impedance
— At the motor end, by cable impedance and motor capacitance

Surge capacitors are used, also connected between each phase and ground, to decrease the slope of the wavefront of lightning and switching surge voltages. As the surge voltage wavefront travels through the motor winding, the surge voltage between adjacent turns and adjacent coils of the same phase are lower for a wavefront having a decreased slope. (A less steep wavefront is another way of designating a wavefront having a decreased slope.) The recommended practice is to install a surge protection package consisting of a three-phase capacitor and three surge arrestors.

Table 10-2—The equivalent BILs by present standard test for commercially used motor voltages

Rated voltage (V)	NEMA BIL (kV)	IEC BIL (kV)
2400	9	15
4160	15	22
13 800	51	60

The steep-fronted surges appearing across the motor terminals are caused by lightning strikes, normal circuit breaker operation, motor starting, aborted starts, bus transfers, switching windings (or speeds) in two-speed motors, or switching of power factor correcting capacitors. Turn insulation testing also imposes a high stress on the insulation system.

The crest value and rise time of the surge at the motor depend on the transient event taking place, on the electrical system design, and on the number and characteristics of all other devices in the system. These factors include, but are not limited to, the motor, the cables connecting the motor to the switching device, the conduit and conduit grounding, the type of switching device, the length of the switchgear bus, and the number of other circuits connected to the bus.

See IEEE Std C37.96-2000 for additional information on recommendations of the IEEE Surge Protection Committee.

10.5.8.2 Locations of surge protection

The surge protection should be located as close to the motor terminals (in circuit length) as feasible, preferably with leads of 1 m or less. The supply circuit should connect directly to the surge equipment first and then go to the motor.

Copyright © 2001 IEEE. All rights reserved.

--`,,`-`-`,,`,,`,`,,`---

Copyright The Institute of Electrical and Electronics Engineers, Inc.
Provided by IHS under license with IEEE
No reproduction or networking permitted without license from IHS
Not for Resale

Specifying that the surge protection be supplied in an oversized terminal box on the motor or in a terminal box adjacent to the motor is becoming more common. When surge protection is supplied in a motor terminal box, it must be disconnected before high-voltage dielectric testing of the motor is begun. This step is a recognized inconvenience of this arrangement. A separate surge disconnecting device may be required.

If the motors are within 30 m of their starters or the supply bus, locating the surge arresters, but not capacitors, in the starters or supply bus switchgear is economical (but not as effective). In the latter case, one set of surge protection can be used for all the motors within that 30 m of the bus. Alternatively, this approach may be used for the smaller motors, and individual surge protection installed at each larger motor. Neither of these remote methods is recommended nor is locating the surge protection at the line side of the motor disconnect recommended as the disconnect can also be located too distant to be effective.

10.5.8.3 Application of surge protection

The following factors should be considered when applying surge protection:

a) When a medium-voltage motor is rated above 370 kW, surge arresters and capacitors should be considered.
b) When a 150 kW or larger motor is connected to open overhead lines at the same voltage level as the motor, surge arrestors and capacitors should be considered.
c) Even when a transformer is connecting the motors to open overhead lines, surge protection is still required at times to protect against lightning or switching surges. Techniques are available to analyze this situation. If doubt exists, surge protection should be provided. Refer to 10.5.8.2 for surge protection on the supply bus for motors located remote from the bus. In addition, refer to Chapter 13 and Chapter 14, which recommend protection for switchgear and incoming lines.
d) Where certain vacuum or SF_6 circuit breakers or vacuum contactors are used, surge protection may be necessary due to the possibility of restrikes, which can result in voltage spikes.

10.5.9 Protection against overexcitation from shunt capacitance

10.5.9.1 Nature of problem

When the supply voltage is switched off, an induction motor initially continues to rotate and retain its internal voltage. If a capacitor bank is left connected to the motor or if a long distribution line having significant shunt capacitance is left connected to the motor, the possibility of overexcitation exists. Overexcitation results when the voltage versus current curves of the shunt capacitance and the motor no-load excitation characteristic intersect at a voltage above the rated motor voltage.

The maximum voltage that can occur is the maximum voltage on the motor no-load excitation characteristic (sometimes called magnetization or saturation characteristic). This voltage, which decays with motor speed, can be damaging to a motor (see Figure 10-20 as an example).

 Copyright © 2001 IEEE. All rights reserved.

Copyright The Institute of Electrical and Electronics Engineers, Inc.
Provided by IHS under license with IEEE
No reproduction or networking permitted without license from IHS Not for Resale

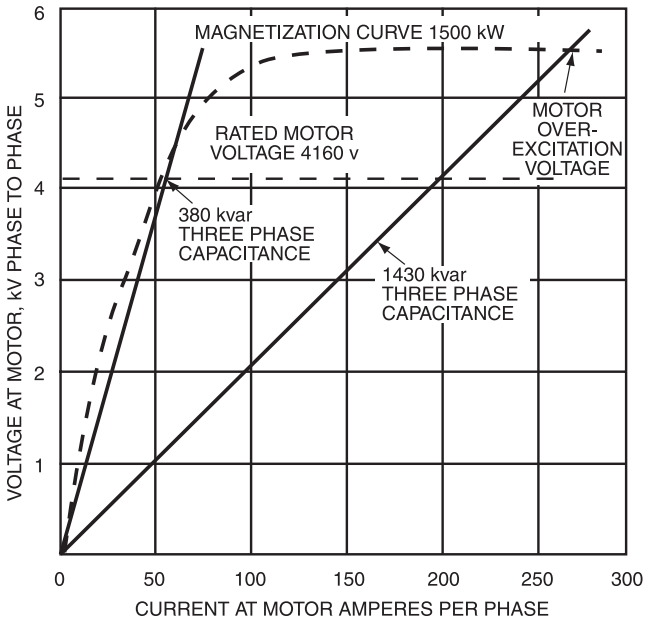

NOTE–Transient voltage may approach 170%.

Figure 10-20—Excess shunt capacitance from utility line, which is likely to overexcite a large high-speed motor

Damaging inrush can occur if automatic reclosing or transfer takes place on a motor that has a significant internal voltage due to overexcitation.

10.5.9.2 Protection

When overexcitation is expected, protection can be applied in several ways, beginning with the simplest protection of a separate contactor to drop out the capacitors when the motor power source is lost. The contactor could also be dropped out by instantaneous overvoltage relays. An alternative is to use a high-speed underfrequency relay, which, however, may not be fast enough on high-inertia or lightly loaded motors.

The underfrequency relay is not suitable for motors whose frequency may not decrease following loss of the supply overcurrent protective disconnecting device. With these applications, a loss-of-power relay could be used. Examples of these applications are

a) Mine hoist with overhauling load characteristic at time of loss of supply overcurrent device

b) Motor operating as induction generator on shaft with process gas expander

c) Induction motor with forced commutation from an ASD

Copyright © 2001 IEEE. All rights reserved.

Copyright The Institute of Electrical and Electronics Engineers, Inc.
Provided by IHS under license with IEEE
No reproduction or networking permitted without license from IHS
Not for Resale

10.5.10 Protection against automatic reclosing or automatic transfer

10.5.10.1 Nature of problem

When the supply voltage is switched off, motors initially continue to rotate and retain an internal voltage. This voltage decays with motor speed and internal flux. If system voltage is restored out-of-phase with a significant motor internal voltage, high inrush current can damage the motor windings or produce torques damaging to the shaft, foundation or drive coupling, or gears (see 10.3.2).

IEEE Std C37.96-2000 discusses considerations for the probability of damage occurring for various motor and system parameters. One of the best methods to prevent fast reclosing is to consult with the power supplier to determine whether they can delay reclosing (e.g., 2 s or more or whatever becomes a standard practice).

10.5.10.2 Protection

The following protection alternatives should be considered:

a) Delay restoration of system voltage, using a timer (Device 62) for a preset interval sufficient for adequate decay of the motor internal voltage. This method may not be as necessary if the power supplier cooperates on the reclosing, but could be a backup device, provided that the timer's reliability is acceptable.
b) Delay restoration of system voltage until the internal voltage fed back from the motors has dropped to a low enough value. This value is commonly considered to be 25% of rated voltage. The frequency also decreases as the voltage decays due to motor deceleration. The undervoltage relay (Device 27) and its setting should be chosen accordingly to include a full-wave rectifier and a dc coil and to make the relay dropout independent of frequency. If an ac frequency-sensitive relay is used, it should be set (based on motor and system tests) to actually drop out at 25% of rated voltage and at the frequency that will exist when 25% of rated voltage is reached.
c) Use a high-speed underfrequency relay (Device 81) to detect the supply outage and trip the motors before supply voltage is restored. A limitation exists if the motor operates at the same voltage level as the supply lines on which faults may occur followed by an automatic reclosing or transfer operation. The problem is that the underfrequency relay requires some voltage in order to have operating torque. If no impedance (e.g., a transformer) exists between the motor and the system fault location, then the voltage may not be sufficient to permit the underfrequency relay to operate. Digital frequency relays are not as voltage limited as electromechanical relays.
d) Use single-phase (Device 27) or three-phase undervoltage relays as follows:
    1) One relay with a sufficiently fast time setting can be connected to the same VT as the underfrequency relay [see Item c)] and sense the fault condition that results in insufficient voltage to operate the underfrequency relay.
    2) One, two, or three relays (i.e., each connected to a different phase) can be used to detect the supply outage and trip the motors when sufficient time delay exists before the supply is restored.

 Copyright © 2001 IEEE. All rights reserved.

Copyright The Institute of Electrical and Electronics Engineers, Inc.
Provided by IHS under license with IEEE
No reproduction or networking permitted without license from IHS Not for Resale

e) Use a loss-of-power relay (Device 37). This underpower relay should be sufficiently fast and sensitive. A high-speed three-phase relay has been used frequently, but should be blocked at startup until sufficient load is obtained on the circuit or motor with which it is applied.

f) Use a reverse-power relay (Device 32). This relay detects a separation between motors and their source. While this approach is suitable in some circumstances, the loss-of-power relay application is generally more suitable than the reverse-power relay application due to the following limitations:

   1) During the fault when the source is still connected to the motors, net power flow continues into the motors for low-level faults. Although not true for three-phase bolted faults, low-level faults have very low impedance into which reverse power flows.
   2) Tripping by reverse power can usually be relied upon only if a definite load remains to absorb power from high-inertia motor drives after the source-fault-detecting relays isolate the source from the motors.
   3) Reverse-power relays responsive to reactive power (i.e., vars) instead of real power (i.e., watts) usually do not provide a suitable means of isolating motors prior to automatic reclosing or automatic transfer operations.

10.5.11 Protection against excessive shaft torques

A phase-to-phase or three-phase short circuit at or near the synchronous motor terminals produces high shaft torques that may be damaging to the motor or driven machine. Computer programs have been developed for calculation of these torques. Refer to IEEE Std C37.96-2000 for information on this potential problem.

To minimize exposure to damaging torques, a three-phase high-speed undervoltage relay (Device 27) can be applied to detect severe phase-to-phase or three-phase short-circuit conditions for which the motors should be tripped. This relay is often the type whose torque is proportional to the area of the triangle formed by the three voltage phasors. A severe reduction in phase-to-phase or three-phase voltage causes tripping. An additional tripping delay of 1 cycle to 8 cycles may be satisfactory from a protection point of view and desirable to avoid unnecessary shutdowns. This protection can be achieved using a suitable timer. Selection of protection and settings for this application should be done in consultation with the suppliers of the motor, driven machine, and protection device.

10.5.12 Protection against excessive shaft torques developed during transfer of motors between out-of-phase sources

A rapid transfer of large motors from one energized power system to another energized power system could cause very high motor inrush currents and severe mechanical shock to the motor. The abnormal inrush currents may be high enough to trip circuit breakers or blow fuses and could damage motor system components. The mechanical jolt could physically damage the motor, shaft, and couplings.

These effects can occur in emergency or standby power systems when a motor is de-energized and then rapidly reconnected to another source of power that is out-of-phase with

Copyright © 2001 IEEE. All rights reserved.

Copyright The Institute of Electrical and Electronics Engineers, Inc.
Provided by IHS under license with IEEE
No reproduction or networking permitted without license from IHS
Not for Resale

the motor's regenerated voltage. Motors above 37 kW driving high-inertia loads (e.g., centrifugal pumps, fans) may require special consideration.

The problem can be eliminated if the motor circuits can be de-energized long enough to permit the residual voltage to decay before power is again applied to the motor. This step can be done in two ways. In one available method, auxiliary contacts or a relay on the automatic transfer switch can open the motor holding coil circuits, while the transfer is delayed about 3 s. This method is sometimes effective, but requires interwiring between the transfer switch and the motor starters and depends upon the reliability of a timing device. Another method utilizes a transfer switch with a timed center-off position. The switch opens, goes to the neutral or off position, is timed to stay there about 3 s to 10 s, and then completes the transfer. This approach eliminates any interwiring to the motors. The required time delay should be carefully set and may vary as the system conditions change. A third position (neutral) creates the danger that the transfer switch may remain indefinitely in a neutral position in the event of a control circuit or contactor malfunction.

Another solution is to momentarily parallel the two power sources on transfer, connecting both sources together and then dropping one out. This approach is completely effective because power to the motors is never interrupted. However, it can require new equipment. If one source is utility power, a problem may exist in that some utilities do not permit paralleling another source with their systems. In obtaining permission for the paralleling from the utility, a design review may lead to additional protective relaying. An additional factor is that the combined available fault current may exceed the ratings of the connected electrical switching equipment.

In-phase transfer is another solution to the problem. An accessory on the transfer switch, known as an in-phase monitor (Device 25), measures the phase-angle difference between the two power sources. An on-site generator set would be controlled by an automatic synchronizer, which recognizes that the two sources continually go in and out of phase. At the proper window or acceptable phase-angle difference between the sources, the synchronizer initiates transfer. The design allows for the operating time of the transfer switch so that the oncoming source is connected to the motors in phase or at a phase difference small enough to eliminate excessive inrush currents and mechanical shock. No special field adjustments or interwiring to the motors are required. For typical transfer switches with transfer times of 10 cycles (166 ms) or less and for frequency differences between the sources of up to 2 Hz, the synchro-check relay provides a safe transfer of motors.

10.5.13 Protection against failure to rotate

10.5.13.1 Failure to rotate

A failure to rotate occurs when the supply is single phased or if the motor or driven machine is jammed. The following protection is available:

a) Relays may be used to detect single phasing (see 10.3.3.2).
b) The direct means to detect failure to rotate is to use a shaft-speed sensor and timer to check whether a preset speed has been reached by the end of a short preset interval

 Copyright © 2001 IEEE. All rights reserved.

Copyright The Institute of Electrical and Electronics Engineers, Inc.
Provided by IHS under license with IEEE
No reproduction or networking permitted without license from IHS Not for Resale

after energizing the motor. This protection is necessary for induction and brushless synchronous motors that have a permissible locked-rotor time less than normal acceleration time.

c) For induction and brushless synchronous motors having a permissible locked-rotor time greater than normal acceleration time, relying upon the inverse-time phase-overcurrent relays is normal (see 10.3.4 and 10.3.5).

d) For brush synchronous motors having a permissible locked-rotor time less than normal acceleration time, one method of protection is to use a frequency-sensitive relay connected to the field discharge resistor and a timer because the frequency of the induced field current flowing through the discharge resistor is related to the motor speed. A frequency-sensitive adjustable time-delay voltage relay is also available to provide this protection.

e) For brush synchronous motors having a permissible locked-rotor time greater than normal acceleration time, relying upon the damper-winding protection and incomplete starting sequence protection is normal.

f) For a large induction motor protection to start, an impedance relay (Device 21) may be applied (see 10.5.1, Figure 10-8, and Figure 10-9).

10.5.13.2 Reverse rotation

A directional speed switch mounted on the shaft and a timer can be used to detect starting with reverse rotation. Some motor loads are equipped with a ratchet arrangement to prevent reverse rotation.

A reversal in the phase rotation can be detected by a reverse-phase voltage relay (Device 47) [see 10.3.3.4 b)] if the reversal occurs in the system on the supply side of the relay. This relay cannot detect a reversal that occurs between the motor and the point at which the relay is connected to the system.

10.6 References

This recommended practice shall be used in conjunction with the following standards. When the following standards are superseded by an approved revision, the revision shall apply.

API Std 541-1995, Form-Wound Squirrel Cage Induction Motors—250 Horsepower and Larger.[3]

API Std 546-1997, Brushless Synchronous Machines—500 kVA and Larger.

IEC 60947-4-1-2000, Low-Voltage Switchgear and Controlgear, Part 4: Contactors and Motor Starters, Section One—Electromechanical Contactors and Motor-Starters.[4]

[3]API publications are available from the Publications Section, American Petroleum Institute, 1200 L Street NW, Washington, DC 20005, USA (http://www.api.org/).

Copyright © 2001 IEEE. All rights reserved.

Copyright The Institute of Electrical and Electronics Engineers, Inc.
Provided by IHS under license with IEEE
No reproduction or networking permitted without license from IHS
Not for Resale

IEEE Std 141-1993 (Reaff 1999), IEEE Recommended Practice for Electric Power Distribution for Industrial Plants (*IEEE Red Book*).[5]

IEEE Std 241-1990 (Reaff 1997), IEEE Recommended Practice for Electric Power Systems in Commercial Buildings (*IEEE Gray Book*).

IEEE Std 1015-1997, IEEE Recommended Practice for Applying Low-Voltage Circuit Breakers Used in Industrial and Commercial Power Systems (*IEEE Blue Book*).

IEEE Std C37.2-1996, IEEE Standard Electrical Power System Device Function Numbers.

IEEE Std C37.17-1997, Trip Devices for AC and General Purpose DC Low-Voltage Power Circuit Breakers.

IEEE Std C37.96-2000, IEEE Guide for AC Motor Protection.

NEMA ICS 2-2000, Industrial Control and Systems Controllers, Contactors and Overload Relays Rated 600 Volts.[6]

NEMA MG 1-1998 (Revision 1, 2000), Motors and Generators.

NFPA 20-1999, Standard for the Installation of Centrifugal Fire Pumps.[7]

NFPA 70-1999, National Electrical Code® (NEC®).[8]

10.7 Bibliography

The following publications have material referenced in the text and are recommended for further study:

[B1] Bradfield, H. L., and Heath, D. W., "Short-Circuit Protection of Energy-Efficient Motors," *IEEE Industry Applications Magazine*, vol. 3, no. 1, pp. 41–44, Jan./Feb. 1997.

---

[4]IEC publications are available from the Sales Department of the International Electrotechnical Commission, Case Postale 131, 3, rue de Varembé, CH-1211, Genève 20, Switzerland/Suisse (http://www.iec.ch/). IEC publications are also available in the United States from the Sales Department, American National Standards Institute, 11 West 42nd Street, 13th Floor, New York, NY 10036, USA.

[5]IEEE publications are available from the Institute of Electrical and Electronics Engineers, 445 Hoes Lane, P.O. Box 1331, Piscataway, NJ 08855-1331, USA (http://standards.ieee.org/).

[6]NEMA publications are available from Global Engineering Documents, 15 Inverness Way East, Englewood, CO 80112, USA (http://global.ihs.com/).

[7]NFPA publications are published by the National Fire Protection Association, Batterymarch Park, Quincy, MA 02269, USA (http://www.nfpa.org/).

[8]The NEC is published by the National Fire Protection Association, Batterymarch Park, Quincy, MA 02269, USA (http://www.nfpa.org/). Copies are also available from the Institute of Electrical and Electronics Engineers, 445 Hoes Lane, P.O. Box 1331, Piscataway, NJ 08855-1331, USA (http://standards.ieee.org/).

 Copyright © 2001 IEEE. All rights reserved.

--`,,`,,`-`-`,,`,,`,`,,`---

Copyright The Institute of Electrical and Electronics Engineers, Inc.
Provided by IHS under license with IEEE
No reproduction or networking permitted without license from IHS Not for Resale

[B2] Gregory, G. D., "Single-Pole Short-Circuit Interruption of Molded-Case Circuit Breakers," IEEE I&CPS Conference Record, Section 5, Paper 1, pp. 1–8, May 1999.

[B3] Gregory, G. D., and Padden, L. K., "Application Guidelines for Instantaneous Trip Circuit Breakers in Combination Starters" (a working group report), *IEEE Transactions on Industry Applications*, vol. 34, no. 4, pp. 697–704, July/Aug. 1998.

[B4] Gregory, G. D., and Padden, L. K., "Testing and Applying Instantaneous Trip Circuit Breakers in Combination Motor Starters," IEEE PCIC Conference Record, pp. 41–49, 1998.

[B5] Love, D. J., "Ground Fault Protection of Electric Utility Generating Station Medium-Voltage Auxiliary Power System," IEEE Transactions on Power Apparatus and Systems, vol. PAS-97, No. 2, March/April 1978, pp. 583–586.

[B6] Love, D. J. and Hashemi, N., "Considerations for Ground Fault Protection, Medium-Voltage Industrial and Co-Generating Systems," IEEE Transactions on Industry Applications, vol. IA-24, July/August 1988, pp. 548–553.

[B7] Nailen, R. L., *Managing Motors*, 1st ed. Chicago: Barks Publications, Inc., 1991, pp. 4-61 and 4-62.

[B8] Nailen, R. L., "Motor Inrush Current: What Does It Really Mean?" *Electrical Apparatus Magazine*, pp. 56–60, June 1986.

[B9] NEMA MG 10-1994, Energy Management Guide for Selection and Use of Fixed Frequency Medium AC Squirrel-Cage Polyphase Induction Motors.

[B10] Padden, L. K., and Pillai, P., "Simplifying Motor Coordination Studies," *IEEE Industry Applications Magazine*, vol. 5, no. 2, pp. 38–52, Mar./Apr. 1999.

[B11] Prabhakara, F. S., Smith Jr., R.L., and Stratford, R. P., *Industrial and Commercial Power Systems Handbook,* 1st ed. Mcgraw-Hill, 1995, pp. 8–46.

[B12] Smith III, A. J., "Short Circuit Ratings, Labels and Fault Withstandability of Molded-Case and Insulated-Case Circuit Breakers and Combination Motor Starters," IEEE PCIC Conference Record, pp. 9–18, 1991.

[B13] UL 489, Standard for Molded Case Circuit Breaker and Circuit Breaker Enclosure.

[B14] Yuen, M. H., Rittenhouse J. D., and Fox F. K., "Large Wound-Rotor Motor with Liquid Rheostat for Refinery Compressor Drive," *IEEE Transactions on Industry and General Applications*, vol. IGA-1, pp.140–149, Mar./Apr. 1965.

Copyright © 2001 IEEE. All rights reserved.

Copyright The Institute of Electrical and Electronics Engineers, Inc.
Provided by IHS under license with IEEE
No reproduction or networking permitted without license from IHS
Not for Resale

Copyright The Institute of Electrical and Electronics Engineers, Inc.
Provided by IHS under license with IEEE
No reproduction or networking permitted without license from IHS
Not for Resale

Chapter 11
Transformer protection

11.1 General discussion

Increased use of electric power in industrial plants has led to the use of larger and more expensive primary and secondary substation transformers. This chapter is directed towards the proper protection of these transformers.

Primary substation transformers normally range in size between 1000 kVA and 12 000 kVA, with a secondary voltage between 2400 V and 13 800 V. Secondary substation transformers normally range in size between 300 kVA and 2500 kVA, with secondary voltages of 208 V, 240 V, or 480 V. Larger and smaller transformers may also be protected by the devices discussed in this chapter.

11.2 Need for protection

Transformer failure may result in loss of service. However, prompt fault clearing, in addition to minimizing the damage and cost of repairs, usually minimizes system disturbance, the magnitude of the service outage, and the duration of the outage. Prompt fault clearing usually prevents catastrophic damage. Proper protection is, therefore, important for transformers of all sizes, even though they are among the simplest and most reliable components in the plant's electrical system.

Previous studies (see Table 11-1) have indicated that all transformers had a failure rate of 62 per 10 000 transformer years; that transformers rated 300 kVA to 10 000 kVA had a failure rate of 59 per 10 000 transformer years; and that transformers rated greater than 10 000 kVA had a failure rate 153 per 10 000 transformer years. These statistics might be taken incorrectly to imply that little or no transformer protection is required.

The need for transformer protection is strongly indicated when the average forced hours of downtime per transformer year is considered. The large value of 356 h average out-of-service time per transformer failure challenges the system engineer to properly protect the transformer and minimize any damage that could occur.

The failure of a transformer can be caused by any of a number of internal or external conditions that make the unit incapable of performing its proper function electrically or mechanically. Transformer failures may be grouped by initiating cause as follows:

a) *Winding breakdown*, the most frequent cause of transformer failure. Reasons for this type of failure include insulation deterioration or defects in manufacturing, overheating, mechanical stress, vibration, and voltage surges.
b) *Terminal boards and no-load tap changers*. Failures are attributed to improper assembly, damage during transportation, excessive vibration, or inadequate design.

Copyright © 2001 IEEE. All rights reserved.

Copyright The Institute of Electrical and Electronics Engineers, Inc.
Provided by IHS under license with IEEE
No reproduction or networking permitted without license from IHS
Not for Resale

Table 11-1—Reliability of power transformers (1979 survey)

Equipment subclass	Failure rate (failures for unit-year)	Average repair time (hours per failure)	Average replacement time (hours per failure)
All liquid filled	0.0062	356.1	85.1
Liquid filled 300–10 000 kVA	0.0059	297.4	79.3
Liquid filled >10 000 kVA	0.0153	1178.5[a]	192.0[a]
Dry 300–10 000 kVA	[a]	[a]	[a]
Source: IEEE Std 493-1997 (The Gold Book)			

[a]Small sample size; less than eight failures.

c) *Bushing failures*. Causes include vandalism, contamination, aging, cracking, and animals.

d) *Load-tap-changer failures*. Causes include mechanism malfunction, contact problems, insulating liquid contamination, vibration, improper assembly, and excessive stresses within the unit. Load-tap-changing units are normally applied on utility systems rather than on industrial systems.

e) *Miscellaneous failures*. Causes include core insulation breakdown, bushing current transformer (CT) failure, liquid leakage due to poor welds or tank damage, shipping damage, and foreign materials left within the tank.

Failure of other equipment within the transformer protective device's zone of protection could cause the loss of the transformer to the system. This type of failure includes any equipment (e.g., cables, bus ducts, switches, instrument transformers, surge arresters, neutral grounding devices) between the next upstream protective device and the next downstream device.

11.3 Objectives in transformer protection

Protection is achieved by the proper combination of system design, physical layout, and protective devices as required to

a) Economically meet the requirements of the application,

b) Protect the electrical system from the effects of transformer failure,

c) Protect the transformer from disturbances occurring on the electrical system to which it is connected,

Copyright © 2001 IEEE. All rights reserved.

Copyright The Institute of Electrical and Electronics Engineers, Inc.
Provided by IHS under license with IEEE
No reproduction or networking permitted without license from IHS
Not for Resale

d) Protect the transformer as much as possible from incipient malfunction within the transformer itself, and

e) Protect the transformer from physical conditions in the environment that may affect reliable performance.

11.4 Types of transformers

Under the broad category of transformers, two types are widely used in industrial and commercial power systems: liquid and dry. Liquid transformers are constructed to have the essential element, the core and coils of the transformer, contained in the liquid-filled enclosure. This liquid serves both as an insulating medium and as a heat-transfer medium. The dry transformers are constructed to have the core and coils surrounded by an atmosphere, which may be the surrounding air, free to circulate from the outside to the inside of the transformer enclosure. The dry coils may be conventional (with exposed, insulated conductors) or encapsulated (with the coils completely vacuum-cast in an epoxy resin).

An alternative to the free circulation of outside air through the dry transformer is the sealed enclosure in which a gas or vapor is contained. In either case, this surrounding medium acts both as a heat-transfer medium and as an insulating medium. It is important, with both liquid and dry transformers, that the quality and function of the surrounding media be monitored to avoid damage to the core and coil structures. Systems to preserve or protect the medium within the transformer enclosure are presented briefly in 11.5.

11.5 Preservation systems

11.5.1 Dry preservation systems

Dry preservation systems are used to ensure an adequate supply of clean ventilating air at an acceptable ambient temperature. Contamination of the insulating ducts within the transformer can lead to reduced insulation strength and severe overheating. The protection method most commonly used in commercial applications consists of a temperature-indicating device with probes installed in the transformer winding ducts and contacts to signal dangerously high temperature by visual and audible alarm. Figure 11-1 illustrates this feature.

The following types of dry systems are commonly used:

— Open ventilated
— Filtered ventilated
— Totally enclosed, nonventilated
— Sealed air- or gas-filled

Copyright © 2001 IEEE. All rights reserved.

Copyright The Institute of Electrical and Electronics Engineers, Inc.
Provided by IHS under license with IEEE
No reproduction or networking permitted without license from IHS
Not for Resale

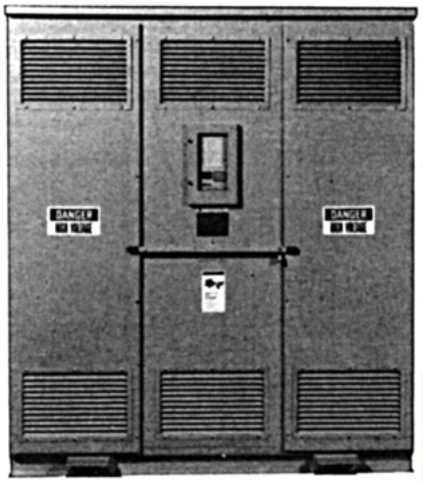

Figure 11-1—Tamper-proof, fan-cooled, dry ventilated, outdoor transformer with microprocessor temperature-control system

11.5.2 Liquid preservation systems

Liquid preservation systems are used to preserve the amount of liquid and to prevent its contamination by the surrounding atmosphere that may introduce moisture and oxygen leading to reduced insulation strength and to sludge formation in cooling ducts.

The importance of maintaining the purity of insulating oil becomes increasingly critical at higher voltages because of increased electrical stress on the insulating oil.

The sealed tank system is now used almost to the total exclusion of other types in industrial and commercial applications. The following types of systems are commonly used:

— Sealed tank
— Positive-pressure inert gas
— Gas-oil seal
— Conservator tank

Liquid preservation systems have historically been called oil-cooled systems, even though the medium was askarel or a substitute for askarel.

11.5.2.1 Sealed tank

The sealed-tank design is most commonly used and is standard on most substation transformers. As the name implies, the transformer tank is sealed to isolate it from the outside atmosphere.

Copyright © 2001 IEEE. All rights reserved.

Copyright The Institute of Electrical and Electronics Engineers, Inc.
Provided by IHS under license with IEEE
No reproduction or networking permitted without license from IHS
Not for Resale

A gas space equal to about one-tenth of the liquid volume is maintained above the liquid to allow for thermal expansion. This space may be purged of air and filled with nitrogen.

A pressure-vacuum gauge and bleeder device may be furnished on the tank to allow the internal pressure or vacuum to be monitored and any excessive static pressure buildup to be relieved to avoid damage to the enclosure and operation of the pressure-relief device. This system is the simplest and most maintenance-free of all of the preservation systems.

11.5.2.2 Positive-pressure inert gas

The positive-pressure inert gas design shown in Figure 11-2 is similar to the sealed-tank design with the addition of a gas (usually nitrogen) pressurizing the assembly. This assembly provides a slight positive pressure in the gas supply line to prevent air from entering the transformer during operating mode or temperature changes. Transformers with primary windings rated 69 kV and above and rated 7500 kVA and above typically are equipped with this device.

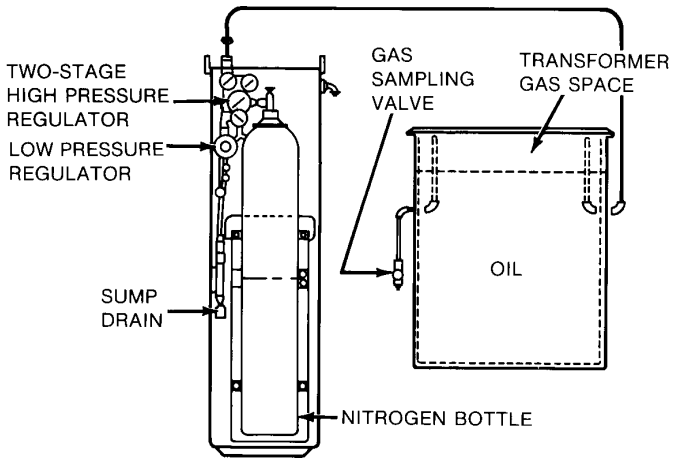

Figure 11-2—Positive-pressure inert-gas assembly, often used on sealed-tank transformers rated 7500 kVA and above and 69 kV and above primary voltage

11.5.2.3 Gas-oil seal

The gas-oil seal design incorporates a captive gas space that isolates a second auxiliary oil tank from the main transformer oil, as shown in Figure 11-3. The auxiliary oil tank is open to the atmosphere and provides room for thermal expansion of the main transformer oil volume.

The main tank oil expands or contracts due to changes in its temperature causing the level of the oil in the auxiliary tank to rise or lower as the captive volume of gas is forced out of or allowed to reenter the main tank. The pressure of the auxiliary tank oil on the contained gas maintains a positive pressure in the gas space, preventing atmospheric vapors from entering the main tank.

Copyright © 2001 IEEE. All rights reserved.

Copyright The Institute of Electrical and Electronics Engineers, Inc.
Provided by IHS under license with IEEE
No reproduction or networking permitted without license from IHS
Not for Resale

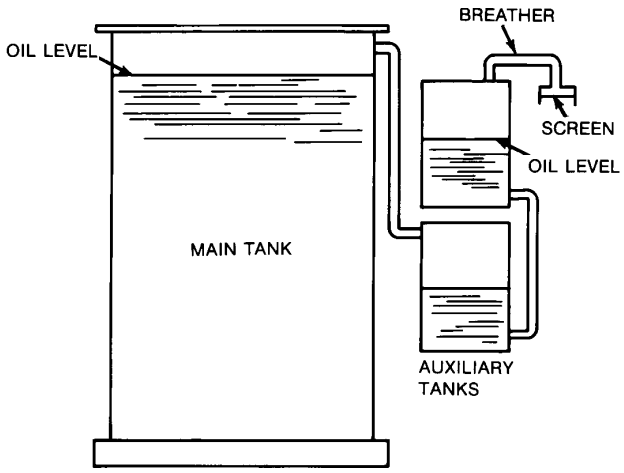

Figure 11-3—Gas-oil seal system of oil preservation

11.5.2.4 Conservator tank

The conservator tank design shown in Figure 11-4 does not have a gas space above the oil in the main tank. It includes a second oil tank above the main tank cover with a gas space adequate to absorb the thermal expansion of the main tank oil volume. The second tank is connected to the main tank by an oil-filled tube or pipe.

A large diameter stand pipe extends at an angle from the cover and is closed above the liquid level by a frangible diaphragm that ruptures for rapid gas evolution and thereby releases pressure to prevent damage to the enclosure.

Because the conservator construction allows gradual liquid contamination, it has become obsolete in the United States.

11.6 Protective devices for liquid preservation systems

11.6.1 Liquid-level gauge

The liquid-level gauge, shown in Figure 11-5 and Figure 11-6, is used to measure the level of insulating liquid within the tank with respect to a predetermined level, usually indicated at 25 °C. An excessively low level could indicate the loss of insulating liquid. Such a loss could lead to internal flashovers and overheating if not corrected. Periodic observation is normally performed to check that the liquid level is within acceptable limits. Alarm contacts for low liquid level are normally available as a standard option. Alarm contacts should be specified for unattended stations to save transformers from loss-of-insulation failure. The alarm contact is set to close before an unsafe condition actually occurs. The alarm contacts should be connected through a communication link to an attended station.

Copyright © 2001 IEEE. All rights reserved.

Copyright The Institute of Electrical and Electronics Engineers, Inc.
Provided by IHS under license with IEEE
No reproduction or networking permitted without license from IHS
Not for Resale

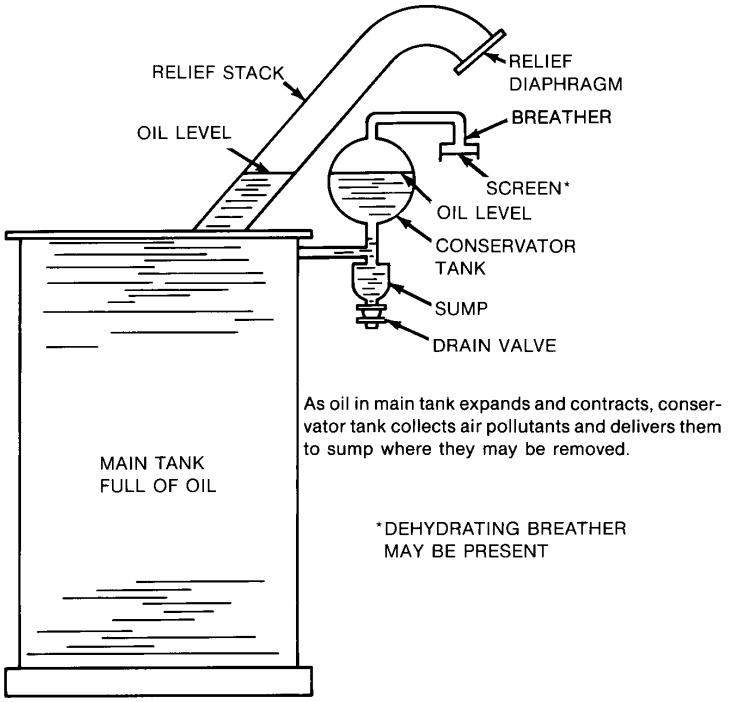

Figure 11-4—Conservator tank oil-preservation system

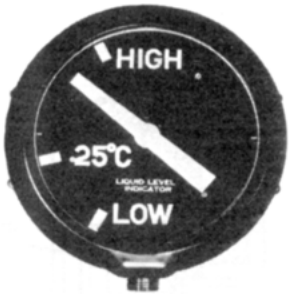

Figure 11-5—Liquid-level indicator depicting level of liquid with respect to a predetermined level, usually 25 °C

11.6.2 Pressure-vacuum gauge

The pressure-vacuum gauge in Figure 11-7 indicates the difference between the transformer's internal gas pressure and atmospheric pressure. It is used on transformers with sealed-tank oil preservation systems. Both the pressure-vacuum gauge and the sealed-tank oil preservation system are standard on most small and medium power transformers.

Copyright © 2001 IEEE. All rights reserved.

Copyright The Institute of Electrical and Electronics Engineers, Inc.
Provided by IHS under license with IEEE
No reproduction or networking permitted without license from IHS
Not for Resale

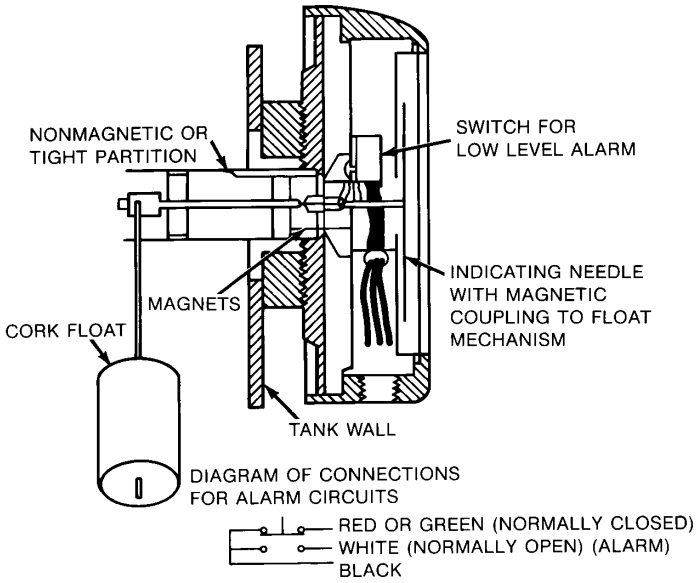

Figure 11-6—Liquid-level-indicating needle, driven by a magnetic coupling to the float mechanism

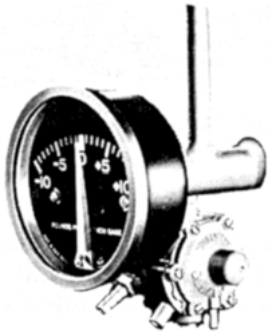

Figure 11-7—Pressure vacuum gauge (which indicates internal gas pressure relative to atmospheric pressure) with bleeder valve (which allows pressure to be equalized manually)

The pressure in the gas space is normally related to the thermal expansion of the insulating liquid and varies with load and ambient temperature changes. Large positive or negative pressures could indicate an abnormal condition, such as a gas leak, particularly if the transformer has been observed to remain within normal pressure limits for some time or if the pressure-vacuum gauge has remained at the zero mark for a long period. The pressure-vacuum gauge equipped with limit alarms may be used to detect excessive vacuum or positive pressure that could cause tank rupture or deformation. The need for pressure-limit alarms is less urgent when the transformer is equipped with a pressure relief device.

Copyright © 2001 IEEE. All rights reserved.

Copyright The Institute of Electrical and Electronics Engineers, Inc.
Provided by IHS under license with IEEE
No reproduction or networking permitted without license from IHS
Not for Resale

11.6.3 Pressure-vacuum bleeder valve

A transformer is designed to operate over a range of 100°, generally from –30 °C to +70 °C. Should the temperature exceed these limits, the pressure-vacuum bleeder valve automatically adjusts to prevent any gauge pressure or vacuum in excess of 35 kPa. This valve also prevents operation of the pressure-relief device in response to slowly increasing pressure caused by severe overload heating or extreme ambient temperatures. Also incorporated in the pressure-vacuum bleeder valve is a hose burr and a manually operated valve to allow purging or checking for leaks by attaching the transformer to an external source of gas pressure. The pressure-vacuum bleeder valve is usually mounted with the pressure-vacuum gauge as shown in Figure 11-7.

11.6.4 Pressure-relief device

A pressure-relief device is a standard accessory on all liquid-insulated substation transformers, except on small oil-insulated secondary substation units, where it may be optional. This device, shown in Figure 11-8, can relieve both minor and serious internal pressures. When the internal pressure exceeds the tripping pressure (e.g., 70 kPa, ±7 kPa gauge), the device snaps open allowing the excess gas or fluid to be released. Upon operation, a pin (standard), alarm contact (optional), or semaphore signal (optional) is actuated to indicate operation. The device normally resets automatically, is self-sealing, and requires little or no maintenance or adjustment.

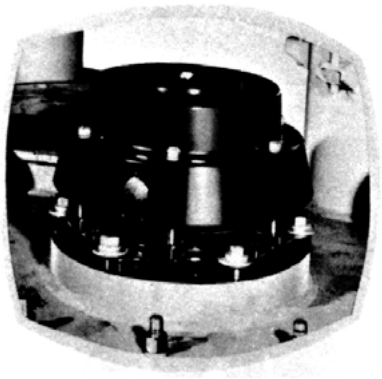

Figure 11-8—Pressure-relief device, which limits internal pressure to prevent tank rupture under internal fault conditions

This pressure-relief device is mounted on top of the transformer cover and usually has a visual indicator. The indicator should be reset manually in order to indicate subsequent operation. When equipped with an alarm contact in conjunction with a self-sealing relay, this device can provide remote warning. Any operation of the pressure-relief device that was not preceded by high-temperature loading is indicative of possible trouble in the windings.

Copyright © 2001 IEEE. All rights reserved.

--`,,`-`-`,,`,,`,`,,`---

Copyright The Institute of Electrical and Electronics Engineers, Inc.
Provided by IHS under license with IEEE
No reproduction or networking permitted without license from IHS
Not for Resale

The major function of the pressure-relief device is to prevent rupture or damage to the transformer tank due to excessive pressure in the tank. Excessive pressure is developed due to high-peak loading, long-time overloads, or internal arc-producing faults.

11.6.5 Mechanical detection of faults

Two methods of detecting transformer faults exist other than by electric measurements:

a) Accumulation of gases due to slow decomposition of the transformer insulation or oil. These relays can also detect heating due to high-resistance joints or due to high eddy currents between laminations.
b) Increases in tank oil or gas pressures caused by internal transformer faults.

Relays that use these methods are valuable supplements to differential or other forms of relaying, particularly for grounding transformers and transformers with complicated circuits that are not well suited to differential relaying, such as certain regulating and phase-shifting transformers. These relays may be more sensitive for certain internal faults than relays that are dependent upon electrical quantities. Therefore, gas accumulator and oil and gas pressure relays can be valuable in minimizing transformer damage due to internal faults.

11.6.5.1 Gas-accumulator relay

A gas-accumulator relay, commonly known as the Buchholz relay, is applicable only to transformers equipped with conservator tanks and with no gas space inside the transformer tank. The relay is placed in the pipe from the main tank to the conservator tank and is designed to trap any gas that may rise through the oil. It operates for small faults by accumulating the gas over time or for large faults that force the oil through the relay at a high velocity. This device is able to detect a small volume of gas and accordingly can detect arcs of low energy. The accumulator portion of the relay is frequently used for alarming only. It may detect gas that is not the result of a fault, but rather evolved by the gassing of the oil during a sudden reduction of pressure. This relay may detect heating due to high-resistance joints or high eddy currents between laminations.

11.6.5.2 Gas-detector relay

The gas-detector relay shown in Figure 11-9 is a special device used to detect and indicate an accumulation of gas from a transformer with a conservator tank, either conventional or sealed. The relay often detects gas evolution from minor arcing before extensive damage occurs to the windings or core. This relay may detect heating due to high-resistance joints or high eddy current between laminations. These incipient winding faults and hot spots in the core normally generate small amounts of gas that are channeled to the top of the special domed cover. From there the bubbles enter the accumulation chamber of the relay through a pipe.

Essentially, the gas detector relay is a magnetic liquid-level gage with a float operating in an oil-filled chamber. The relay is mounted on the transformer cover with a pipe connection from the highest point of the cover to the float chamber. A second pipe connection from the

 Copyright © 2001 IEEE. All rights reserved.

Copyright The Institute of Electrical and Electronics Engineers, Inc.
Provided by IHS under license with IEEE
No reproduction or networking permitted without license from IHS Not for Resale

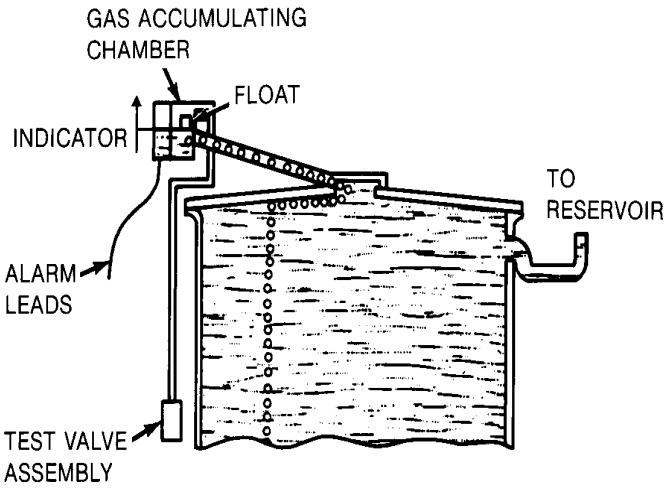

Figure 11-9—Gas-detector relay, which accumulates gases from top air space of transformer (used only on conservator tank units)

float chamber is carried to an eye level location on the tank wall. This connection is used for removing gas samples for analysis. The relay is equipped with a dial graduated in cubic centimeters and a snap action switch set to function to give an alarm when a specific amount of gas has been collected. Gas accumulation is indicated on the gauge in cubic centimeters. An accumulation of gas of 100 cm^3 to 200 cm^3, for example, lowers a float and operates an alarm switch to indicate that an investigation is necessary. This gas can then be withdrawn for analysis and recording.

The rate of gas accumulation is a clue to the magnitude of the fault. If the chamber continues to fill quickly, with resultant operation of the relay, potential danger may justify removing the transformer from service.

11.6.5.3 Static pressure relay

The static pressure relay can be used on all types of oil-immersed transformers. They are mounted on the tank wall under oil and respond to the static or total pressure. These relays for the most part have been superseded by the sudden pressure relay, but many are in service on older transformers. However, due to their susceptibility to operate for temperature changes or external faults, the majority of the static pressure relays that are in service are connected for alarm only.

11.6.5.4 Sudden pressure relays

Sudden pressure relays are normally used to initiate isolation of the transformer from the electrical system and to limit damage to the unit when the transformer internal pressure abruptly rises. The abrupt pressure rise is due to the vaporization of the insulating liquid by

Copyright © 2001 IEEE. All rights reserved.

Copyright The Institute of Electrical and Electronics Engineers, Inc.
Provided by IHS under license with IEEE
No reproduction or networking permitted without license from IHS
Not for Resale

an internal fault, such as internal shorted turns, ground faults, or winding-to-winding faults. The bubble of gas formed in the insulating liquid creates a pressure wave that promptly activates the relay.

Because operation of this pressure-sensitive device is closely associated with actual faults in the windings, it is risky to re-energize a transformer that has been removed from service by the rapid pressure rise relay. The transformer should be taken out of service for thorough visual and diagnostic checks to determine the extent of damage.

One type of relay, the sudden oil-pressure relay shown in Figure 11-10, uses the insulating liquid to transmit the pressure wave to the relay bellows. Inside the bellows, a special oil transmits the pressure wave to a piston that actuates a set of switch contacts. This type of relay is mounted on the transformer tank below oil level. (See 11.6.5.4.1.)

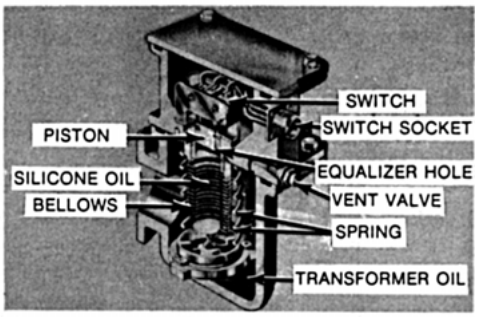

Figure 11-10—Sudden oil-pressure-rise relay mounted on transformer tank below normal oil level

Another type of relay, the sudden gas-pressure relay shown in Figure 11-11, uses the inert gas above the insulating liquid to transmit the pressure wave to the relay bellows. Expansion of the bellows actuates a set of switch contacts. This type of relay is mounted on the transformer tank above oil level. (See 11.6.5.4.2.)

Both types of relays have a pressure-equalizing opening to prevent operation of the relay on gradual rises in internal pressure due to changes in loading or ambient conditions.

Both types of sudden pressure relays are also sensitive to the rate of rise in the internal pressure. The time for the relay switch to operate is on the order of 4 cycles for high rates of pressure rise (e.g., 172 kPa/s of oil pressure rise; 34.5 kPa/s of air pressure rise). These relays are designed to be insensitive to mechanical shock and vibration, through faults, and magnetizing inrush current.

Copyright © 2001 IEEE. All rights reserved.

Copyright The Institute of Electrical and Electronics Engineers, Inc.
Provided by IHS under license with IEEE
No reproduction or networking permitted without license from IHS
Not for Resale

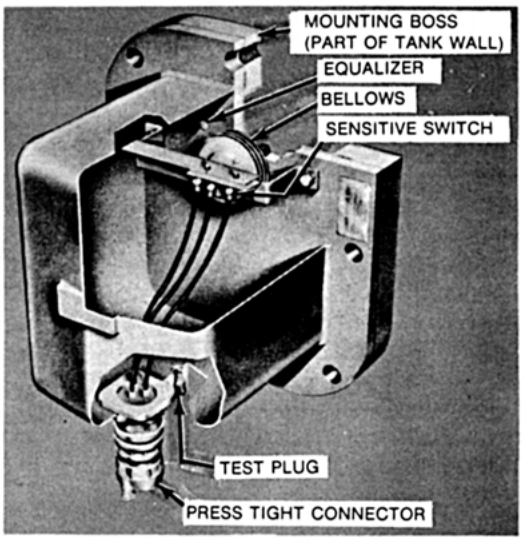

Figure 11-11—Sudden gas-pressure relay mounted on transformer tank above normal oil level

The use of sudden pressure relays increases as the size and value of the transformer increases. Most transformers 5000 kVA and above are equipped with this type of device. This relay provides valuable protection at low cost.

11.6.5.4.1 Sudden oil-pressure relay

The sudden oil-pressure relay is applicable to all oil-immersed transformers and is mounted on the transformer tank wall below the minimum liquid level. Transformer oil fills the lower chamber of the relay housing within which a spring backed bellows is located. The bellows is completely filled with silicone oil and additional silicone oil in the upper chamber is connected to the oil in the bellows by two small equalizer holes.

A piston rests on the silicone oil in the bellows, but extends up into the upper chamber. It is separated from a switch by an air gap. Should an internal fault develop, the rapid rise in oil pressure or pressure pulse is transmitted to the silicone oil by the transformer oil and the bellows. This increased pressure then acts against the piston, which closes the air gap and operates the switch.

For small rises in oil pressure due to changes in loading or ambient temperature, for example, the increased pressure is also transmitted to the silicone oil. However, instead of operating the piston, this pressure is gradually relieved by oil that escapes from the bellows into the upper chamber by the equalizer holes. The bellows then contract slightly. The pressure bias on the relay is thus relieved by this differential feature. Relay sensitivity and response to a fault is thus independent of transformer-operating pressure.

Copyright © 2001 IEEE. All rights reserved.

--`,,`-`-`,,`,,`,`,,`---

Copyright The Institute of Electrical and Electronics Engineers, Inc.
Provided by IHS under license with IEEE
No reproduction or networking permitted without license from IHS
Not for Resale

This relay has proven sufficiently free from false operations to be connected for tripping in most applications. It is important that the relay be mounted in strict accordance with the manufacturers' specifications. A scheme providing a shunt path around the 63X auxiliary-relay coil is preferred to prevent its operation due to surges (see Figure 11-12).

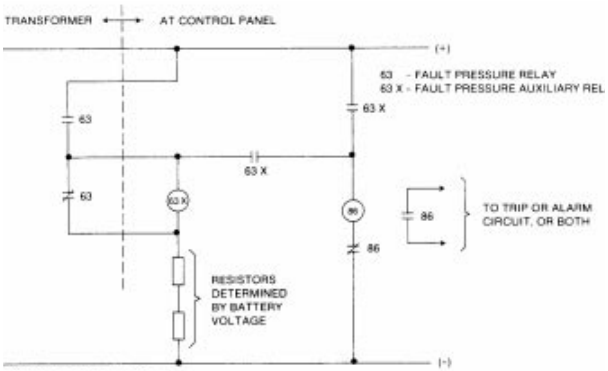

(a)

NOTE—See 11.6.5.4.1.

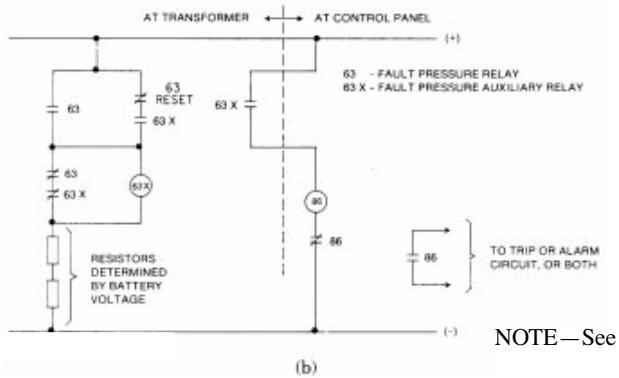

(b)

NOTE—See 11.6.5.4.1.

Figure 11-12—Fault pressure relay schemes (a) Auxiliary relay at control panel (b) Auxiliary relay at transformer with manual reset

11.6.5.4.2 Sudden gas-pressure relay

The sudden gas-pressure relay is applicable to all gas-cushioned oil-immersed transformers and is mounted in the region of the gas space. It consists of a pressure-actuated switch, housed in a hermetically sealed case and isolated from the transformer gas space except for a pressure-equalizing orifice.

The relay operates on the difference between the pressure in the gas space of the transformer and the pressure inside the relay. An equalizing orifice tends to equalize these two pressures for slow changes in pressure due to loading and ambient temperature change. However, a more rapid rise in pressure in the gas space of the transformer due to a fault results in

Copyright © 2001 IEEE. All rights reserved.

Copyright The Institute of Electrical and Electronics Engineers, Inc.
Provided by IHS under license with IEEE
No reproduction or networking permitted without license from IHS
Not for Resale

operation of the relay. High-energy arcs evolve a large quantity of gas, which operates the relay in a short time. The operating time is longer for low-energy arcs.

This relay has proven sufficiently free from false operations to be connected for tripping in most applications. It is important that the relay be mounted in strict accordance with the manufacturer's specifications.

11.6.5.4.3 Sudden gas/oil-pressure relay

A more recent design of the relays described in 11.6.5.4.1 and 11.6.5.4.2 is the sudden gas/oil-pressure relay, which utilizes two chambers, two control bellows, and a single sensing bellows. All three bellows have a common interconnecting silicone-oil passage with an orifice, and an ambient-temperature-compensating assembly is inserted at the entrance to one of the two control bellows.

An increase in transformer pressure causes a contraction of the sensing bellows, which forces a portion of the silicone oil from that bellows into the two control bellows and expands them. An orifice limits the flow of oil into one control bellows to a fixed rate, while there is essentially no restriction to flow into the second control bellows. The two control bellows expand at a uniform rate for gradual rate of rise in pressure; but during high rates of transformer pressure rise, the orifice causes a slower rate of expansion in one bellows relative to the other. The dissimilar expansion rate between the two control bellows causes a mechanical linkage to actuate the snap action switch, which initiates the proper tripping.

11.6.5.5 Dissolved fault-gases detection device

The dissolved fault-gases detection device can be used for continuous monitoring of hydrogen. The instrument shown in Figure 11-13 is a special device (developed in 1975) used to detect fault gases dissolved in transformer mineral oil and to continually monitor their evolution. Thermal and electrical stresses break the insulation materials down, and gases are generated. These gases dissolve in oil. The materials involved and the severity of the fault determine the gases produced. The rate of production of these gases is dependent on the temperature of the fault and is indicative of the magnitude of the fault. These faults are normally not detected until they develop into larger and more damaging ones.

The transformer incipient fault monitor measures the dissolved fault gases that are characteristic of the breakdown of the solid and liquid insulation materials. Hydrogen and other combustible gases diffusing through a permeable membrane are oxidized on a platinum gas-permeable electrode; oxygen from the ambient air is electrochemically reduced on a second electrode. The ionic contact between the two electrodes is provided by a gelled high-concentration sulfuric acid electrolyte. The electric signal generated by this fuel cell is directly proportional to the total combustible gas concentration and is sent to a conditioning electric circuit. The resulting output signal is temperature compensated.

This device is easily retrofitted on existing transformers in the field or installed on transformers at the time of manufacture or repair. The sensor is installed on a valve on the transformer, and the electronics control is mounted on the transformer or on an adjacent

Copyright © 2001 IEEE. All rights reserved.

Copyright The Institute of Electrical and Electronics Engineers, Inc.
Provided by IHS under license with IEEE
No reproduction or networking permitted without license from IHS
Not for Resale

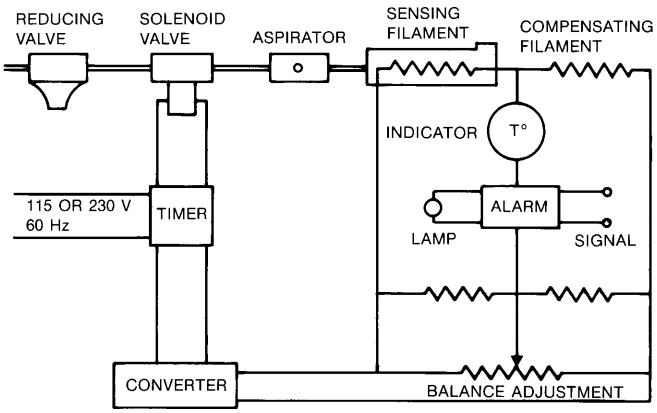

Figure 11-13—Combustible gas relay, which periodically samples gas in transformer to detect any minor internal fault before it can develop into a serious fault

structure. A digital display on the electronics control enclosure indicates the concentration of fault gases. Alarm levels are programmable and warn personnel when diagnostic or remedial actions are needed. The device can be connected to a data acquisition system to detect a deviation from a base and to monitor the rate of change.

This type of device is used on critical transformers; it reduces unplanned outages, provides for more predictable and reliable maintenance, and creates a safer work environment.

Gas-analysis equipment can be used to test the composition of gases in the transformers. By analyzing the percentage of unusual or decomposed gases in the transformer, a determination can be made about whether the transformer has a low-level fault and, if so, what type of fault had occurred.

11.7 Thermal detection of abnormalities

11.7.1 Causes of transformer overheating

Transformers may overheat due to

— High ambient temperature
— Failure of cooling system
— External fault not cleared promptly
— Overload
— Abnormal system conditions, such as low frequency, high voltage, nonsinusoidal load current, or phase-voltage unbalance

Copyright © 2001 IEEE. All rights reserved.

Copyright The Institute of Electrical and Electronics Engineers, Inc.
Provided by IHS under license with IEEE
No reproduction or networking permitted without license from IHS
Not for Resale

11.7.2 Undesirable results of overheating

The consequences of overheating include the following:

— Overheating shortens the life of the transformer insulation in proportion to the duration of the high temperature and in proportion to the degree of the high temperature.
— Severe overtemperature may result in an immediate insulation failure.
— Severe overtemperature may cause the transformer coolant to heat above its flash temperature and result in fire.

11.7.3 Liquid temperature indicator (top oil)

The liquid temperature indicator shown in Figure 11-14 measures the temperature of the insulating liquid at the top of the transformer. Because the hottest liquid is less dense and rises to the top of the tank, the temperature of the liquid at the top partially reflects the temperature of the transformer windings and is related to the loading of the transformer.



Figure 11-14—Liquid temperature indicator, the most common transformer temperature-sensing device

The thermometer reading is related to transformer loading only insofar as that loading affects the liquid temperature rise above ambient. Transformer liquid has a much longer time constant than the winding itself and responds slowly to changes in loading losses that directly affect winding temperature. Thus, the thermometer's temperature warning varies between too conservative or too pessimistic, depending on the rate and direction of the change in loading. A high reading could indicate an overload condition.

The liquid temperature indicator is normally furnished as a standard accessory on power transformers. It is equipped with a temperature-indicating pointer and a drag pointer that shows the highest temperature reached since it was last reset.

The liquid temperature indicator can be equipped with one to three adjustable contacts that operate at preset temperatures. The single contact can be used for alarm. When forced air cooling is employed, the first contact initiates the first stage of fans. The second contact either initiates a second stage of fans, if furnished, or an alarm. The third contact, if furnished, is

Copyright © 2001 IEEE. All rights reserved.

Copyright The Institute of Electrical and Electronics Engineers, Inc.
Provided by IHS under license with IEEE
No reproduction or networking permitted without license from IHS
Not for Resale

used for the final alarm or to initiate load reduction on the transformer. The indicated temperatures would change for different temperature insulation system designs.

Because the top-oil temperature may be considerably lower than the hot-spot temperature of the winding, especially shortly after a sudden load increase, the top-oil thermometer is not suitable for effective protection of the winding against overloads. However, where the policy toward transformer loss of life permits, tripping on top-oil temperature may be satisfactory. This approach has the added advantage of directly monitoring the oil temperature to ensure that it does not reach the flash temperature.

Similar devices are available for responding to air or gas temperatures in dry transformers. For unattended substations, these devices may be connected to central annunciators.

11.7.4 Thermal relays

Thermal relays, diagrammatically shown in Figure 11-15, are used to give a more direct indication of winding temperatures of either liquid or dry transformers. A CT is mounted on one of the three phases of the transformer bushing. It supplies current to the thermometer bulb heater coil, which contributes the proper heat to closely simulate the transformer hot-spot temperature.

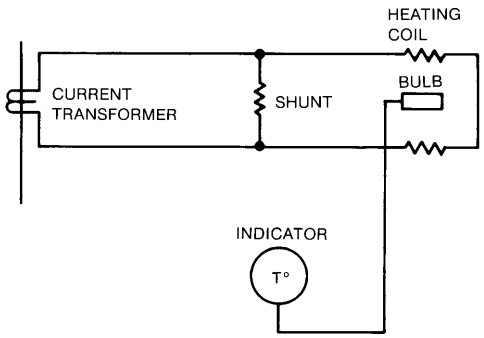

Figure 11-15—Thermal (or winding temperature) relay, which uses a heating element to duplicate effects of current in transformer

Monitoring of more than one phase is desirable if a reason exists to expect an unbalance in the three-phase loading.

The temperature indicator is a bourdon gauge connected through a capillary tube to the thermometer bulb. The fluid in the bulb expands or contracts proportionally to the temperature changes and is transmitted through the tube to the gauge. Coupled to the shaft of the gauge indicator are cams that operate individual switches at preset levels of indicated transformer temperature.

Thermal relays are used more often on transformers rated 10 000 kVA and above than on smaller transformers. They can be used on all sizes of substation transformers.

 Copyright © 2001 IEEE. All rights reserved.

Copyright The Institute of Electrical and Electronics Engineers, Inc.
Provided by IHS under license with IEEE
No reproduction or networking permitted without license from IHS Not for Resale

11.7.5 Hot-spot temperature thermometers

Hot-spot temperature equipment shown in Figure 11-16 is similar to the thermal relay equipment on a transformer because it indicates the hottest-spot temperature of the transformer. While the thermal relay works with fluid expansion and a bourdon gauge, the hot-spot temperature equipment works electrically using a Wheatstone bridge method. In other words, it measures the resistance of a resistance temperature detector (RTD) that is responsive to transformer temperature changes and increases with higher temperature. Because this device can be used with more than one detector coil location, temperatures of several locations within the transformer can be checked. The location of the hottest spot within a transformer is predictable from the design parameters. A common practice is to measure or to simulate this hot-spot temperature and to base control action accordingly. The desired control action depends on the users' philosophy, on the amount of transformer life the user is willing to lose for the sake of maintaining service, and the priorities the user places on other aspects of the problem. Transformer top-oil temperature may be used, with or without hot-spot temperature, to establish the desired control action.

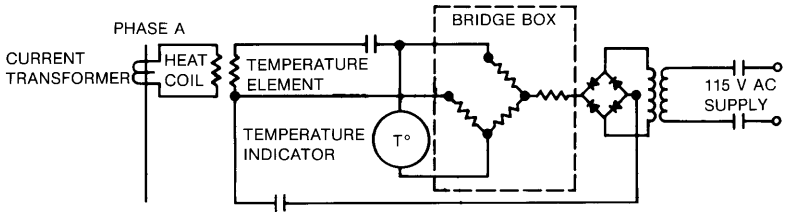

Figure 11-16—Hot-spot temperature indicator, which utilizes Wheatstone bridge method to determine transformer temperature

A common method of simulating the hot-spot temperature is with a thermal relay responsive to both top-oil temperature and to the direct heating effect of load current. In these relays, the thermostatic element is immersed in the transformer top oil. An electric heating element is supplied with a current proportional to the winding current so that the responsive element tracks the temperature that the hot spot of the winding attains during operation. If this tracking is exact, the relay would operate at the same time that the winding reaches the set temperature. Because insulation deterioration is also a function of the duration of the high temperature, additional means are generally used to delay tripping action for some period. One common method is to design the relay with a time constant longer than the time constant of the winding. Thus, the relay does not operate until some time after the set temperature has been attained by the winding. No standards have been established for this measuring technique, nor is information generally available to make an accurate calculation of the complete performance of such a relay. These relays can have from one to three contacts that close at successively higher temperatures. With three contacts, the lowest level is commonly used to start fans or pumps for forced cooling, and the second level to initiate an alarm. The third step may be used for an additional alarm or to trip load breakers or to de-energize the transformer.

Copyright © 2001 IEEE. All rights reserved.

Copyright The Institute of Electrical and Electronics Engineers, Inc.
Provided by IHS under license with IEEE
No reproduction or networking permitted without license from IHS
Not for Resale

Another type of temperature relay is the replica relay. This relay measures the phase current in the transformer and applies this current to heater units inside the relay. Characteristics of these heaters approximate the thermal capability of the protected transformer. In the application of a replica relay, it is desirable to know the time constants of the iron, the coolant, and the winding. In addition, the relay should be installed in an ambient temperature approximately the same as the transformer's ambient temperature and should not be ambient temperature compensated.

11.7.6 Forced-air cooling

Another means of protecting against overloads is to increase the transformer's capacity by auxiliary cooling as shown in Figure 11-17. Forced-air-cooling equipment is used to increase the capacity of a transformer by 15% to 33% of base rating, depending upon transformer size and design. Refer to Chapter 8 of IEEE Std 141-1993.[1] Dual cooling by a second stage of forced-air fans or a forced-oil system gives a second increase in capacity applicable to three-phase transformers rated 12 000 kVA and above.

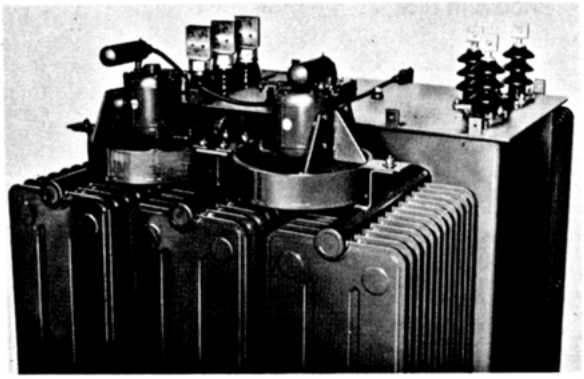

Figure 11-17—Forced-air fans, normally controlled automatically from a top oil temperature or winding temperature relay

Forced air cooling can be added later to increase the transformer's capacity to take care of increased loads, provided that the transformer was ordered to have provisions for future fan cooling.

Auxiliary cooling of the insulating liquid helps keep the temperature of the windings and other components below the design temperature limits. Usually, operation of the cooling equipment is automatically initiated by the top oil temperature indicator or the thermal relay, after a predetermined temperature is reached.

[1]Information on references can be found in 11.12.

Copyright © 2001 IEEE. All rights reserved.

Copyright The Institute of Electrical and Electronics Engineers, Inc.
Provided by IHS under license with IEEE
No reproduction or networking permitted without license from IHS Not for Resale

11.7.7 Fuses or overcurrent relays

Other forms of transformer protection, such as fuses or overcurrent relays, provide some degree of thermal protection to the transformer. Application of these is discussed in 11.9.1.

11.7.8 Overexcitation protection

Overexcitation may be of concern on direct-connected generator unit transformers. Excessive excitation current leads directly to overheating of core and unlaminated metal parts of a transformer. Such overheating in turn causes damage to adjacent insulation and leads to ultimate failure. IEEE Std C57.12.00-2000 requires that transformers shall be capable of operating continuously at 10% above rated secondary voltage at no load without exceeding the limiting temperature rise. The requirement applies for any tap at rated frequency.

Direct-connected generator transformers are subjected to a wide range of frequency during the acceleration and deceleration of the turbine. Under these conditions the ratio of the actual generator terminal voltage to the actual frequency shall not exceed 1.1 times the ratio of transformer rated voltage to the rated frequency on a sustained basis:

$$\frac{\text{generator terminal voltage}}{\text{actual frequency}} \leq 1.1 \times \frac{\text{transformer rated voltage}}{\text{transformer rated frequency}}$$

Generator manufacturers now recommend an overexcitation protection system as part of the generator excitation system. This system may also be used to protect the transformer against overexcitation. These systems may alarm for an overexcitation condition; and, if the condition persists, they may decrease the generator excitation or trip the generator and field breakers, or both. The generator and transformer manufacturers should be asked to provide their recommendation for overexcitation protection.

Overexcitation relays (i.e., V/Hz) may be used on transformers located either at or remote from generating stations. They are available with a definite time delay or an inverse-time overexcitation characteristic and may be connected for trip or alarm.

11.7.9 Nonlinear loads

Nonlinear electrical loads may cause severe overheating even when the transformer is operating below rated capacity. This overheating may cause failure of both the winding and the neutral conductor. Electronic equipment such as computers, printers, uninterruptible power supply (UPS) systems, variable-speed motor drives, and other rectified systems are nonlinear loads. Arc furnace and rectifier transformers also provide power to nonlinear loads. For nonlinear loads, the load current is not proportional to the instantaneous voltage. This situation creates harmonic distortion on the system. Even when the input voltage is sinusoidal, the nonlinear load makes the input voltage nonsinusoidal. Harmonics are integral multiples of the fundamental frequency. For a 60 Hz system, the second harmonic is 120 Hz, the third harmonic is 180 Hz, the fifth is 300 Hz, etc. When incoming ac is rectified to dc, the load current is switched on for part of a cycle. This switching produces harmonics that extend

Copyright © 2001 IEEE. All rights reserved.

Copyright The Institute of Electrical and Electronics Engineers, Inc.
Provided by IHS under license with IEEE
No reproduction or networking permitted without license from IHS
Not for Resale

into the radio frequency range. Nonlinear loads were formerly a small proportion of the total load and had little effect on system design and equipment, but this is no longer true.

The nonlinear load causes transformer overheating in three ways:

— *Hysteresis*. Hysteresis causes excessive heating in the steel laminations of the iron core due to the higher frequency harmonics. These harmonics produce greater magnetizing losses (or hysteresis) than normal 60 Hz losses because the magnetic reversals due to harmonics are more rapid than are the fundamental 60 Hz reversals.

— *Eddy currents*. Heating is produced when the high-frequency harmonic magnetic fields induce currents to flow through the steel laminations. This event occurs when the high-frequency harmonic magnetic field cuts through the steel laminations. These currents (called eddy currents) flow through the resistance of the steel and generate I^2R heating losses. These losses are also greater than normal 60 Hz losses due to the higher frequencies.

— *Skin effect*. Heating is also produced in the winding conductors due to skin effect. Skin effect causes the higher frequency harmonic currents to flow on the outer portion of the conductor and thus reduce the effective cross-sectional area of the conductor. This reaction causes an increase in resistance, which results in more conductor heating than for the same 60 Hz current.

Overheating of neutral conductors from nonlinear loads is due to the following:

— *Zero-sequence and odd-order harmonics*. Zero-sequence and odd-order harmonics are additive in the neutral and can be as high as three times the 60 Hz magnitude. Odd-order harmonics are odd multiples of the fundamental (e.g., third, fifth, seventh, ninth, eleventh). Zero-sequence harmonics are all the odd multiples of the third harmonic (e.g., third, ninth, fifteenth).

— *Skin effect*. Skin effect causes the higher frequency harmonic currents to flow on the outer portion of the conductor and thus reduce the effective cross-sectional area of the conductor. This reaction causes an increase in resistance, which results in more conductor heating than for the same 60 Hz current.

Failures of transformers due to nonlinear loads can be prevented by derating the transformer. In some cases the neutral conductor may need to be larger (e.g., twice the size of the phase conductor rating) to prevent its failure. True root-mean-square (rms) meters, relays, and circuit breaker tripping devices that can sense not needed harmonics should be selected.

Transformers that have a K-factor rating can be used with nonlinear loads within their rating. The K factor is a numerical value that takes into account both the magnitude and the frequency of the components of a current waveform. It is equivalent to the sum of the squares of the harmonic current multiplied by the square of the harmonic order of the current. True rms current meters should be used to determine the per-unit value of each harmonic.

Copyright © 2001 IEEE. All rights reserved.

Copyright The Institute of Electrical and Electronics Engineers, Inc.
Provided by IHS under license with IEEE
No reproduction or networking permitted without license from IHS Not for Resale

$$\text{K factor} = I_h^2 h^2$$

where

I_h is the per-unit rated rms load current at harmonic h,
h is the harmonic order.

The K-factor rating indicates the amount of harmonic content the transformer can handle while remaining within its operating temperature limits.

11.8 Transformer primary protective device

A fault on the electrical system at the point of connection to the transformer can arise from failure of the transformer (e.g., internal fault) or from an abnormal condition on the circuit connected to the transformer secondary, such as a short circuit (e.g., through fault). The predominant means of clearing such faults is a current-interrupting device on the primary side of the transformer, such as fuses, a circuit breaker, or a circuit switcher. Whatever the choice, the primary-side protective device should have an interrupting rating adequate for the maximum short-circuit current that can occur on the primary side of the transformer. If a circuit switcher is used, it should be relayed so that it is called upon only to clear lower current internal or secondary faults that are within its interrupting capability. Instantaneous relays used to protect transformer feeders and high-voltage windings are set greater than the maximum asymmetrical through-fault current on the transformer secondary. The operating current of the primary protective device should be less than the short-circuit current of the transformer as limited by the combination of system and transformer impedance. This recommendation is true for a fuse or a time-overcurrent relay. The point of operation should not be so low, however, to cause circuit interruption due to the inrush excitation current of the transformer or normal current transients in the secondary circuits. Of course, any devices operating to protect the transformer by detecting abnormal conditions within the transformer and removing it from the system also operate to protect the system; but these devices are subordinate to the primary protection of the transformer.

11.9 Protecting the transformer from electrical disturbances

Transformer failures arising from abusive operating conditions are caused by

— Continuous overloading
— Short circuits
— Ground faults
— Transient overvoltages

11.9.1 Overload protection

An overload causes a rise in the temperature of the various transformer components. If the final temperature is above the design temperature limit, deterioration of the insulation system

Copyright © 2001 IEEE. All rights reserved.

Copyright The Institute of Electrical and Electronics Engineers, Inc.
Provided by IHS under license with IEEE
No reproduction or networking permitted without license from IHS
Not for Resale

occurs and causes a reduction in the useful life of the transformer. The insulation may be weakened so that a moderate overvoltage may cause insulation breakdown before expiration of expected service life. Transformers have certain overload capabilities that vary with ambient temperature, preloading, and overload duration. These capabilities are defined in ANSI C57.92-2000 and IEEE Std C57.96-1999. When the temperature rise of a winding is increased, the insulation deteriorates more rapidly, and the life expectancy of the transformer is shortened.

Protection against overloads consists of both load limitation and overload detection. Loading on the transformers may be limited by designing a system where the transformer capacity is greater than the total connected load when a diversity in load usage is assumed. This method of providing overload protection is expensive because load growth and changes in operating procedures would quite often eliminate the extra capacity needed to achieve this protection. A good engineering practice is to size the transformer at about 125% of the present load to allow for system growth and change in the diversity of loads. The specification of a lower-than-ANSI temperature rise also permits an overload capability.

Load limitation by disconnecting part of the load can be done automatically or manually. Automatic load shedding schemes, because of their cost, are restricted to larger units. However, manual operation is often preferred because it gives greater flexibility in selecting the expendable loads.

In some instances, load growth can be accommodated by specifying cooling fans or providing for future fan cooling.

The major method of load limitation that can be properly applied to a transformer is one that responds to transformer temperature. By monitoring the temperature of the transformer, overload conditions can be detected. A number of monitoring devices that mount on the transformer are available as standard or optional accessories. These devices are normally used for alarm or to initiate secondary protective device operation. They include the devices described in 11.9.1.1 and 11.9.1.2.

11.9.1.1 Overcurrent relays

Transformer overload protection may be provided by relays. Chapter 4 describes overcurrent relay construction characteristics and ranges. These relays are applied in conjunction with CTs and a circuit breaker or circuit switcher, sized for the maximum continuous and interrupting duty requirements of the application. A typical application is shown in Figure 11-18.

Overcurrent relays are selected to provide a range of settings above the permitted overloads and instantaneous settings when possible within the transformer through-fault current withstand rating. The characteristics should be selected to coordinate with upstream and downstream protective devices.

The settings of the overcurrent relays should meet the requirements of applicable standards and codes and meet the needs of the power system. The requirements in the National Electrical Code® (NEC®) (NFPA 70-1999) represent upper limits that should be met when

 Copyright © 2001 IEEE. All rights reserved.

Copyright The Institute of Electrical and Electronics Engineers, Inc.
Provided by IHS under license with IEEE
No reproduction or networking permitted without license from IHS Not for Resale

selecting overcurrent devices. These requirements, however, are not guidelines for the design of a system providing maximum protection for transformers. For example, setting a transformer primary or secondary overcurrent protective device at 2.5 times rated current could allow that transformer to be damaged without the protective device operating.

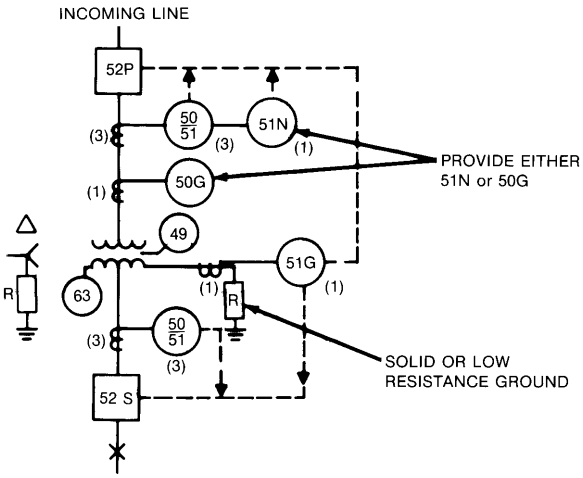

Figure 11-18—Overcurrent relays, frequently used to provide transformer protection in combination with primary circuit breaker or circuit switcher

11.9.1.2 Fuses, circuit breakers, and fused switches

The best protection for the transformer is provided by circuit breakers or fuses on both the primary side and secondary side of the transformer when they are set or selected to operate at minimum values. Common practice is for the secondary-side circuit breaker or fuses to protect the transformer for loading in excess of 125% of maximum rating.

Using a circuit breaker on the primary of each transformer is expensive, especially for small-capacity and less expensive transformers. An economical compromise is where one circuit breaker is installed to feed two to six relatively small transformers. Each transformer has its own secondary circuit breaker and, in most cases, a primary disconnect. Overcurrent protection should satisfy the requirements prescribed by the NEC.

The major disadvantage of this system is that all of the transformers are de-energized by the opening of the primary circuit breaker. Moreover, the rating or setting of a primary circuit breaker selected to accommodate the total loading requirements of all of the transformers would typically be so large that only a small degree of secondary-fault protection, and almost no backup protection, would be provided for each individual transformer.

By using fused switches on the primary of each transformer, short-circuit protection can be provided for the transformer and additional selectivity provided for the system. Using fused switches and time-delay dual-element fuses for the secondary of each transformer allows

Copyright © 2001 IEEE. All rights reserved.

Copyright The Institute of Electrical and Electronics Engineers, Inc.
Provided by IHS under license with IEEE
No reproduction or networking permitted without license from IHS
Not for Resale

close sizing (typically 125% of secondary full-load current) and gives excellent overload and short-circuit protection for 600 V or less applications.

11.9.2 Short-circuit current protection

In addition to thermal damage from prolonged overloads, transformers are also adversely affected by internal or external short-circuit conditions, which can result in internal electromagnetic forces, temperature rise, and arc-energy release.

Ground faults occurring in the substation transformer secondary or between the transformer secondary and main secondary protective device cannot be isolated by the main secondary protective device, which is located on the load side of the ground fault. These ground faults, when limited by a neutral grounding resistor, may not be seen by either the transformer primary fuses or transformer differential relays. They can be isolated only by a primary circuit breaker or other protective device tripped by either a ground relay in the grounding resistor circuit or a ground differential relay. A ground differential relay may consist of a simple overcurrent relay, connected to a neutral ground CT and the residual circuit of the transformer line CTs fed through a ratio matching auxiliary CT. Because this scheme is subject to error on through faults due to unequal CT saturation, a relay with phase restraint coils may be used instead of a simple overcurrent relay.

Secondary-side short circuits can subject the transformer to short-circuit current magnitudes limited only by the sum of transformer and supply-system impedance. Hence, transformers with unusually low impedance may experience extremely high short-circuit currents and incur mechanical damage. Prolonged flow of a short-circuit current of lesser magnitude can also inflict thermal damage.

Protection of the transformer for both internal and external faults should be as rapid as possible to keep damage to a minimum. This protection, however, may be reduced by selective-coordination system design and operating procedure limitations.

Several sensing devices are available that provide varying degrees of short-circuit protection. These devices sense two different aspects of a short circuit. The first group of devices senses the formation of gases consequent to a fault and are used to detect internal faults. The second group senses the magnitude or the direction of the short-circuit current, or both, directly.

The gas-sensing devices include pressure-relief devices, rapid pressure rise relays, gas-detector relays, and combustible-gas relays. The current-sensing devices include fuses, overcurrent relays, differential relays, and network protectors.

11.9.2.1 Gas-sensing devices

Low-magnitude faults in the transformer cause gases to be formed by the decomposition of insulation exposed to high temperature at the fault. Detection of the presence of these gases can allow the transformer to be taken out of service before extensive damage occurs. In some cases, gas may be detected a long time before the unit fails.

 Copyright © 2001 IEEE. All rights reserved.

Copyright The Institute of Electrical and Electronics Engineers, Inc.
Provided by IHS under license with IEEE
No reproduction or networking permitted without license from IHS Not for Resale

High-magnitude fault currents are usually first sensed by other detectors, but the gas-sensing device responds with modest time delay. These devices are described in detail in 11.6.

11.9.2.2 Current-sensing devices

Fuses, overcurrent relays, and differential relays should be selected to provide the maximum degree of protection to the transformer. These protective devices should operate in response to a fault before the magnitude and duration of the overcurrent exceed the short-time loading limits recommended by the transformer manufacturer. In the absence of specific information applicable to an individual transformer, protective devices should be selected in accordance with applicable guidelines for the maximum permissible transformer short-time loading limits. Curves illustrating these limits for liquid-immersed transformers are discussed in 11.9.2.2.1. In addition, ratings or settings of the protective devices should be selected in accordance with pertinent provisions of Chapter 4 of NEC Article 450.

11.9.2.2.1 Transformer through-fault capability

The following discussion is excerpted and paraphrased from Appendix A of ANSI C37.91-2000. Similar information and through-fault protection curves can be found in IEEE Std C57.109-1993. The following discussion is based on these two standards.

Overcurrent protective devices such as fuses and relays have well-defined operating characteristics that relate fault-current magnitude to operating time. The characteristic curves for these devices should be coordinated with comparable curves, applicable to transformers, which reflect their through-fault withstand capability. Such curves for Category I, Category II, Category III, and Category IV liquid-immersed transformers (as described in IEEE Std C57.12.00-2000) are presented in this subclause as through-fault protection curves.

The through-fault protection curve values are based on winding-current relationships for a three-phase secondary fault and may be used directly for delta-delta- and wye-wye-connected transformers. For delta-wye-connected transformers, the through-fault protection curve values should be reduced to 58% of the values shown to provide appropriate protection for a secondary-side single phase-to-neutral fault.

Damage to transformers from through faults is the result of thermal and mechanical effects. The latter have gained increased recognition as a major cause of transformer failure. Although the temperature rise associated with high-magnitude through faults is typically acceptable, the mechanical effects are intolerable if such faults are permitted to occur with any regularity. This possibility results from the cumulative nature of some of the mechanical effects, particularly insulation compression, insulation wear, and friction-induced displacement. The damage that occurs as a result of these cumulative effects is, therefore, a function of not only the magnitude and duration of through faults, but also the total number of such faults.

The through-fault protection curves presented in IEEE Std C57.12.00-2000 take into consideration the fact that transformer damage is cumulative, and the number of through faults to which a transformer can be exposed is inherently different for different applications. For

Copyright © 2001 IEEE. All rights reserved.

Copyright The Institute of Electrical and Electronics Engineers, Inc.
Provided by IHS under license with IEEE
No reproduction or networking permitted without license from IHS
Not for Resale

example, transformers with secondary-side conductors enclosed in conduit or isolated in some other fashion, such as transformers typically found in industrial, commercial, and institutional power systems, experience an extremely low incidence of through faults. In contrast, transformers with overhead secondary-side lines, such as transformers found in utility distribution substations, have a relatively high incidence of through faults. Also, the use of reclosers or automatic reclosing circuit breakers may subject the transformer to repeated current surges from each fault. Thus, for a given transformer in these two different applications, a different through-fault protection curve should apply, depending on the type of application. For applications in which faults occur infrequently, the through-fault protection curve should reflect primarily thermal damage considerations because cumulative mechanical-damage effects of through faults would not be a problem. For applications in which faults occur frequently, the through-fault protection curve reflects the fact that the transformer is subjected to both thermal and cumulative-mechanical damage effects of through faults.

In using the through-fault protection curves to select the time-current characteristics (TCCs) of protective devices, the protection engineer should take into account not only the inherent level of through-fault incidence, but also the location of each protective device and its role in providing transformer protection. For substation transformers with secondary-side overhead lines, the secondary-side feeder protective equipment is the first line of defense against through faults; therefore, its TCCs should be selected by reference to the frequent-fault-incidence protection curve. More specifically, the TCCs of feeder protective devices should be below and to the left of the appropriate frequent-fault-incidence protection curve. Secondary-side main protective devices (if applicable) and primary-side protective devices typically operate to protect against through faults in the rare event of a fault between the transformer and the feeder protective devices, or in the equally rare event that a feeder protective device fails to operate or operates too slowly due to an incorrect (i.e., higher) rating or setting. The TCCs of these devices, therefore, should be selected by reference to the infrequent-fault-incidence protection curve. In addition, these TCCs should be selected to achieve the desired coordination among the various protective devices.

In contrast, transformers with protected secondary conductors (e.g., cable, bus duct, switchgear) experience an extremely low incidence of through faults. Hence the feeder protective devices may be selected by reference to the infrequent-fault-incidence protection curve. The secondary-side main protective device (if applicable) and the primary-side protective device should also be selected by reference to the infrequent-fault-incidence protection curve. Again, these TCCs should also be selected to achieve the desired coordination among the various protective devices.

For Category I transformers (i.e., 5-500 kVA single-phase, 15-500 kVA three-phase), a single through-fault protection curve applies (see Figure 11-19). This curve may be used for selecting protective device TCCs for all applications, regardless of the anticipated level of fault incidence.

For Category II transformers (i.e., 501-1667 kVA single-phase, 501-5000 kVA three-phase), and Category III transformers (i.e., 1668-10 000 kVA single-phase, 500-30 000 kVA three-phase), two through-fault protection curves apply (see Figure 11-20 and Figure 11-21, respectively). The left-hand curve in both figures reflects both thermal and mechanical

 Copyright © 2001 IEEE. All rights reserved.

Copyright The Institute of Electrical and Electronics Engineers, Inc.
Provided by IHS under license with IEEE
No reproduction or networking permitted without license from IHS Not for Resale

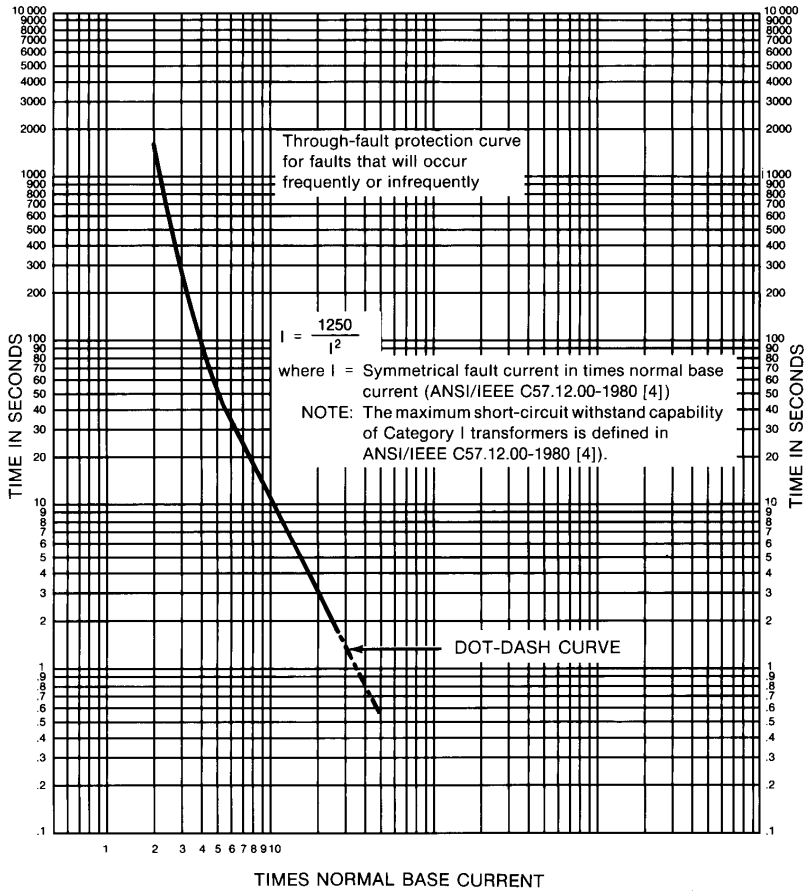

Figure 11-19—Through-fault protection curve for liquid-immersed Category I transformers (5–500 kVA single-phase, 15–500 kVA three-phase)

damage considerations and may be used for selecting feeder protective device TCCs for frequent-fault-incidence applications. The right-hand curve in both figures reflects primarily thermal damage considerations and may be used for selecting feeder protective device TCCs for infrequent-fault-incidence applications. These curves may also be used for selecting secondary-side main protective device (if applicable) and primary-side protective device TCCs for all applications, regardless of the anticipated level of fault incidence.

For Category IV transformers (i.e., above 10 000 kVA single-phase, above 30 000 kVA three-phase), a single through-fault protection curve applies (see Figure 11-22). This curve reflects both thermal and mechanical damage considerations and may be used for selecting protective device TCCs for all applications, regardless of the anticipated level of fault incidence.

Copyright © 2001 IEEE. All rights reserved.

Copyright The Institute of Electrical and Electronics Engineers, Inc.
Provided by IHS under license with IEEE
No reproduction or networking permitted without license from IHS
Not for Resale

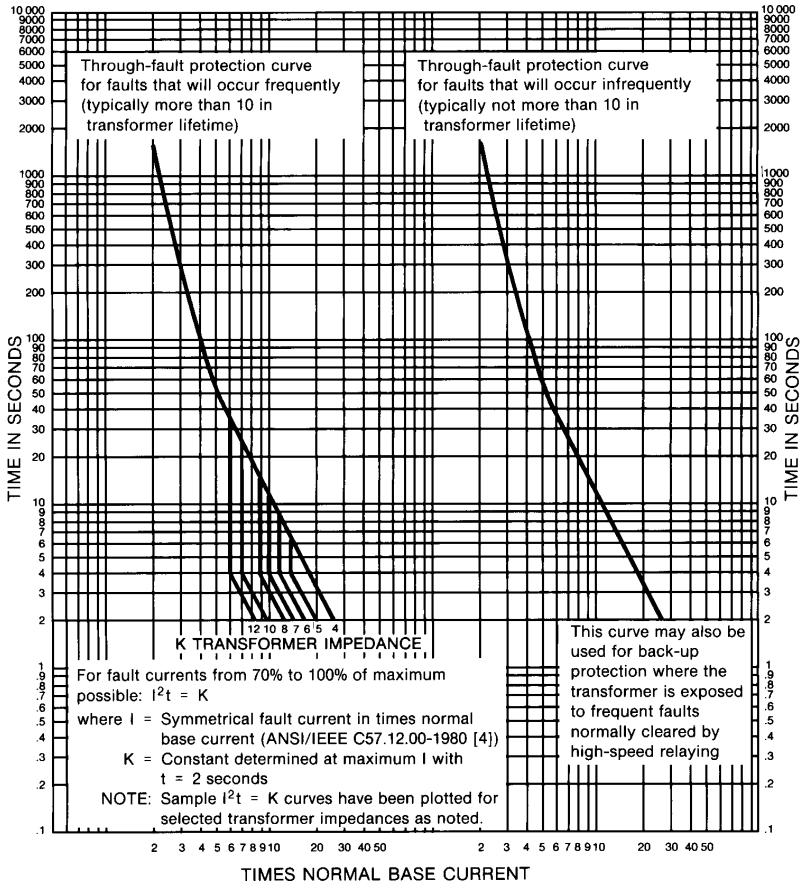

Figure 11-20—Through-fault protection curves for liquid-immersed Category II transformers (501–1667 kVA single-phase, 501–5000 kVA three-phase)

The aforementioned delineation of infrequent- versus frequent-fault-incidence applications for Category II and Category III transformers can be related to the zone or location of the fault (see Figure 11-23).

Because overload protection is a function of the secondary-side protective device or devices, the primary-side protective device characteristic curve may cross the through-fault protection curve at lower current levels. (Refer to appropriate transformer loading guides, IEEE Std C57.91-1995 and ANSI C57.92-2000.) Efforts should be made to have the primary-side protective device characteristic curve intersect the through-fault protection curve at as low a current as possible in order to maximize the degree of backup protection for the secondary-side devices.

Copyright © 2001 IEEE. All rights reserved.

--`,,`-`-`,,`,,`,`,,`---

Copyright The Institute of Electrical and Electronics Engineers, Inc.
Provided by IHS under license with IEEE
No reproduction or networking permitted without license from IHS
Not for Resale

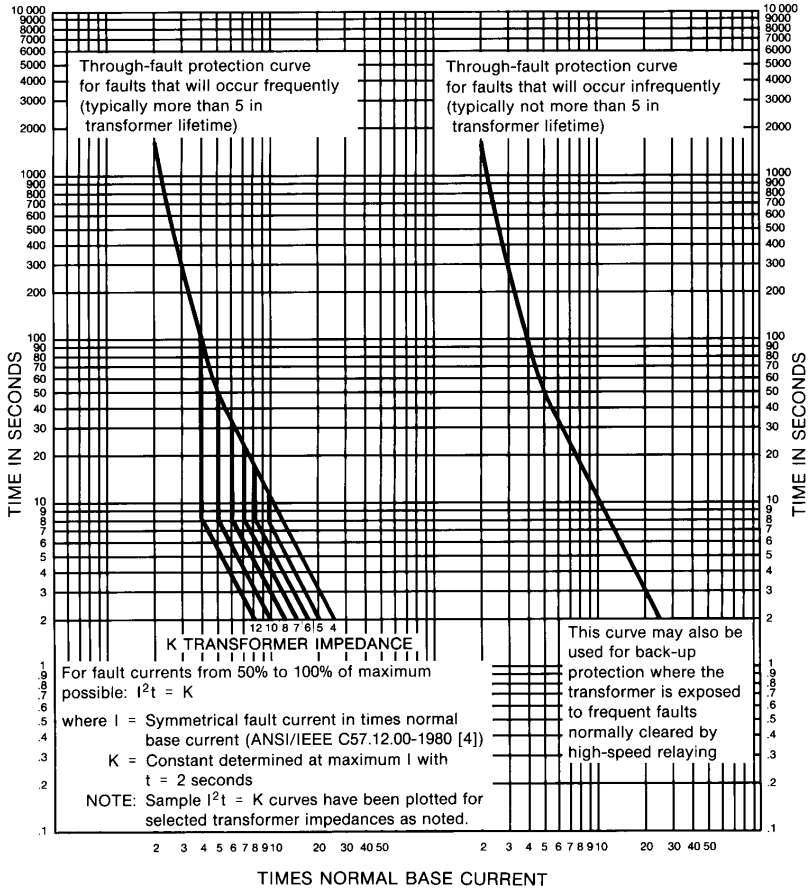

Figure 11-21—Through-fault protection curves for liquid-immersed Category III transformers (1668–10 000 kVA single-phase, 5001–30 000 kVA three-phase)

11.9.2.2.2 Fuses

Fuses utilized on the transformer primary are relatively simple and inexpensive one-time devices that provide short-circuit protection for the transformer. Fuses are normally applied in combination with interrupter switches capable of interrupting full-load current. By using fused switches on the primary where possible, short-circuit protection can be provided for the transformer, and a high degree of system selectivity can also be provided.

Fuse selection considerations include having

— An interrupting capacity equal to or higher than the system fault capacity at the point of application
— A continuous-current capability above the maximum continuous load under various operating modes

Copyright © 2001 IEEE. All rights reserved.

--`,,-`-`,,`,,`,`,,`---

Copyright The Institute of Electrical and Electronics Engineers, Inc.
Provided by IHS under license with IEEE
No reproduction or networking permitted without license from IHS
Not for Resale

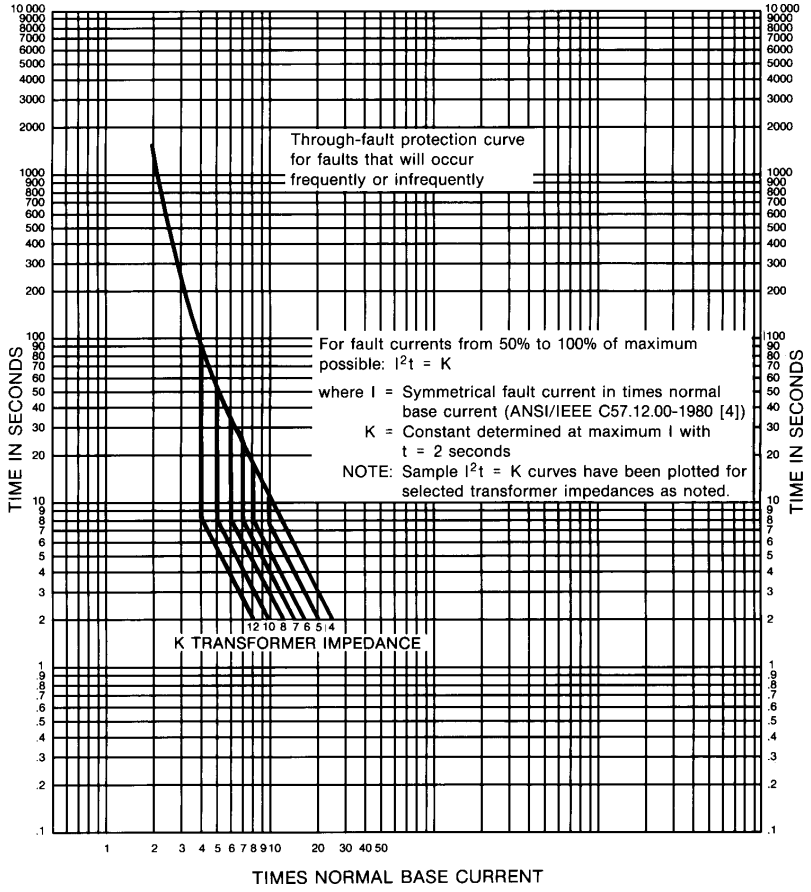

Figure 11-22—Through-fault protection curve for liquid-immersed Category IV transformers (above 10 000 kVA single-phase, above 30 000 kVA three-phase)

— TCCs that pass, without fuse operation, the magnetizing and load-inrush currents that occur simultaneously following a momentary interruption, but interrupt before the transformer withstand point is reached

Fuses so selected can provide protection for secondary faults between the transformer and the secondary-side overcurrent protective device and provide backup protection for the latter.

The magnitude and duration of magnetizing inrush currents vary between different designs of transformers. Inrush currents of 8 or 12 times normal full-load current for 0.1 s are commonly used in coordination studies.

Overload protection can be provided when fuses are used by utilizing a contact on the transformer temperature indicator to shed nonessential load or trip the transformer secondary-side overcurrent protective device.

Copyright © 2001 IEEE. All rights reserved.

Copyright The Institute of Electrical and Electronics Engineers, Inc.
Provided by IHS under license with IEEE
No reproduction or networking permitted without license from IHS
Not for Resale

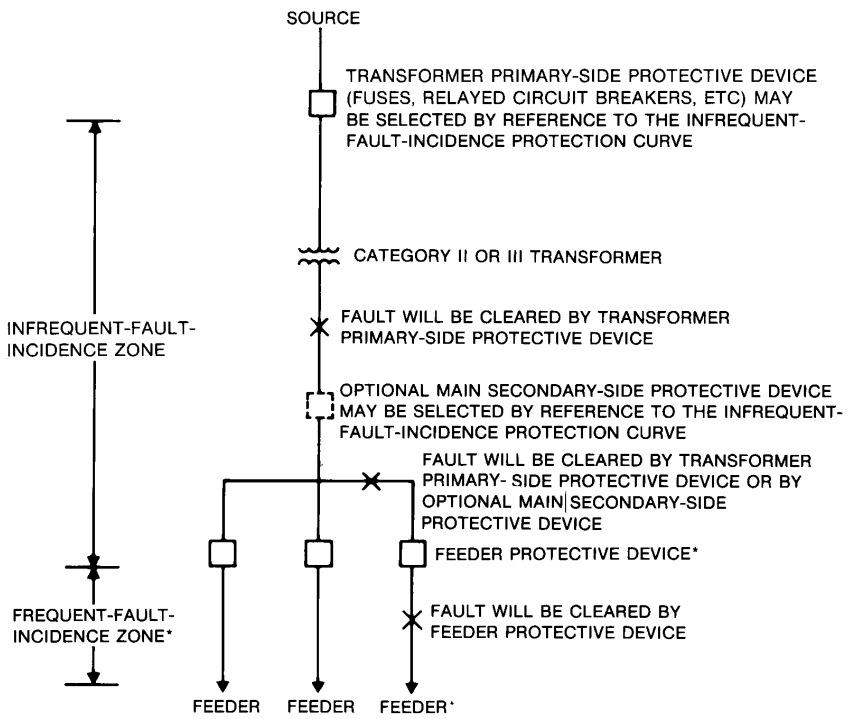

*Should be selected by reference to the frequent-fault-incidence protection curve. For transformers serving systems with secondary-side conductors enclosed in conduit, bus duct, etc, the feeder protective device may be selected by reference to the infrequent-fault-incidence protection curve.

Figure 11-23—Infrequent- and frequent-fault-incidence zones for liquid-immersed Category II and Category III transformers

When the possibility of backfeed exists, the switch, the fuse access door, and the transformer secondary main overcurrent protective device should be interlocked to ensure the fuse is de-energized before being serviced.

Relay-protected systems can provide low-level overcurrent protection. Relay protection systems and fused interrupter switches can provide protection against single-phase operation when an appropriate open-phase detector is used to initiate opening of a circuit breaker or interrupter switch if an open-phase condition should occur.

11.9.2.2.3 Overcurrent relay protection

Overcurrent relays may be used to clear the transformer from the faulted bus or line before the transformer is damaged. On some small transformers, overcurrent relays may also protect for internal transformer faults. On larger transformers, overcurrent relays may be used to provide backup for differential or pressure relays.

Copyright © 2001 IEEE. All rights reserved.

--`,,`-`-`,,`,,`,`,,`---
Copyright The Institute of Electrical and Electronics Engineers, Inc.
Provided by IHS under license with IEEE
No reproduction or networking permitted without license from IHS
Not for Resale

11.9.2.2.3.1 Time overcurrent relays

Overcurrent relays applied on the primary side of a transformer provide protection for transformer faults in the winding, and provide backup protection for the transformer for secondary-side faults. They provide limited protection for internal transformer faults because sensitive settings and fast operation are usually not possible. Insensitive settings result because the pickup value of phase-overcurrent relays must be high enough to take advantage of the overload capabilities of the transformer and be capable of withstanding energizing inrush currents. Fast operation is not possible because they must coordinate with load-side protection. Settings of phase-overcurrent relays on transformers involve a compromise between the requirements of operation and protection.

These settings may result in extensive damage to the transformer from an internal fault. If only overcurrent protection is applied to the high-voltage delta side of a delta-wye-grounded transformer, it can have a problem providing sensitive fault protection for the transformer. For low-voltage (wye-side) line-to-ground faults, the high-side line current is only 58% of the low-voltage per-unit fault current. When the wye is grounded through a resistor, the high-side fault current may be less than the maximum transformer load current.

The time setting should coordinate with relays on downstream equipment. However, transformers are mechanically and thermally limited in their ability to withstand short-circuit current for finite periods. For proper backup protection, the relays should operate before the transformer is damaged by an external fault. (Refer to the transformer through-fault current duration limits.)

When overcurrent relays are also applied on the secondary side of the transformer, these relays are the principal protection for transformer secondary-side faults. However, overcurrent relays applied on the secondary side of the transformer do not provide protection for the transformer winding faults, unless the transformer is backfed.

When setting transformer overcurrent relays, the short-time overload capability of the transformer in question should not be violated. (See IEEE Std C57.91-1995 and ANSI C57.92-2000 for allowable short-time durations, which may be different from the durations in the through-fault current duration curves.) The manufacturer should be consulted for the capability of a specific transformer.

11.9.2.2.3.2 Instantaneous overcurrent relays

Phase instantaneous overcurrent relays provide short-circuit protection to the transformers in addition to overload protection. When used on the primary side, they usually coordinate with secondary protective devices. Fast clearing of severe internal faults can be obtained. The setting of an instantaneous relay is selected on its application with respect to secondary protective devices and circuit arrangements. Such relays are normally set to pick up at a value higher than the maximum asymmetrical through-fault current. This value is usually the fault current through the transformer for a low-side three-phase fault. The setting of instantaneous devices for short-circuit protection for three-circuit arrangements is described in Mathur [B21].[2] For instantaneous units subject to transient overreach, a pickup setting of 175% of the

 Copyright © 2001 IEEE. All rights reserved.

Copyright The Institute of Electrical and Electronics Engineers, Inc.
Provided by IHS under license with IEEE
No reproduction or networking permitted without license from IHS Not for Resale

calculated maximum low-side three-phase symmetrical fault current generally provides sufficient margin to avoid false tripping for a low-side bus fault, while still providing protection for severe internal faults. (Variations in pickup settings of 125% to 200% are common.) For instantaneous units with negligible transient overreach, a lesser margin can be used. The settings in either case shall also be above the transformer inrush current to prevent nuisance tripping. In some cases, instantaneous trip relays cannot be used because the necessary settings are greater than the available fault currents. In these cases, a harmonic restraint instantaneous relay may be considered to provide the desired protection.

11.9.2.2.3.3 Tertiary winding overcurrent relays

The tertiary winding of an autotransformer, or three-winding transformer, is usually of much smaller kilovoltampere rating than the main windings. Therefore, fuses or overcurrent relays set to protect the main windings offer almost no protection to such tertiaries. During external system ground faults, these tertiary windings may carry very heavy currents.

The method selected for protecting the tertiary generally depends on whether the tertiary is used to carry load. If the tertiary does not carry load, protection can be provided by a single overcurrent relay connected to a CT on the tertiary winding. This relay senses system grounds and also phase faults in the tertiary or in its leads.

If the tertiary is used to carry load, partial protection can be provided by a single overcurrent relay supplied by three CTs, one in each winding of the tertiary and connected in parallel to the relay. This connection provides zero-sequence protection, but does not protect for positive- and negative-sequence overload current. The relay operates for system ground faults, but does not operate for phase faults in the tertiary or its leads. This relay needs to be set to coordinate with other system relays.

11.9.2.2.4 Differential relays

11.9.2.2.4.1 Phase differential relays

Differential relaying compares the sum of currents entering the protected zone to the sum of currents leaving the protected zone; these sums should be equal. If more than a certain amount or percentage of current enters than leaves the protected zone, a fault is indicated in the protected zone; and the relay operates to isolate the faulted zone.

Transformer differential relays operate on a percentage ratio of input current to through current; this percentage is called the slope of the relay. A relay with 25% slope operates when the difference between the incoming and outgoing currents is greater than 25% of the through current and higher than the relay minimum pickup.

The fault-detection sensitivity of differential relays is determined by a combination of relay setting and circuit parameters. For most high-speed transformer differential relays, the relay pickup is about 30% of the tap setting. Depending on the setting, sensitivity is about 25% to

[2]Numbers in brackets correspond to the numbers in the bibliography in 11.13.

Copyright © 2001 IEEE. All rights reserved.

Copyright The Institute of Electrical and Electronics Engineers, Inc.
Provided by IHS under license with IEEE
No reproduction or networking permitted without license from IHS
Not for Resale

50% of full-load current. For delta-wye-connected transformers that supply low-resistance-grounded systems, phase differential relays should be supplemented with secondary ground differential relays (Device 87TG), as shown in Figure 11-24, to provide additional sensitivity to secondary ground faults. For more details on application of Device 87TG, refer to Chapter 8 on ground-fault protection.

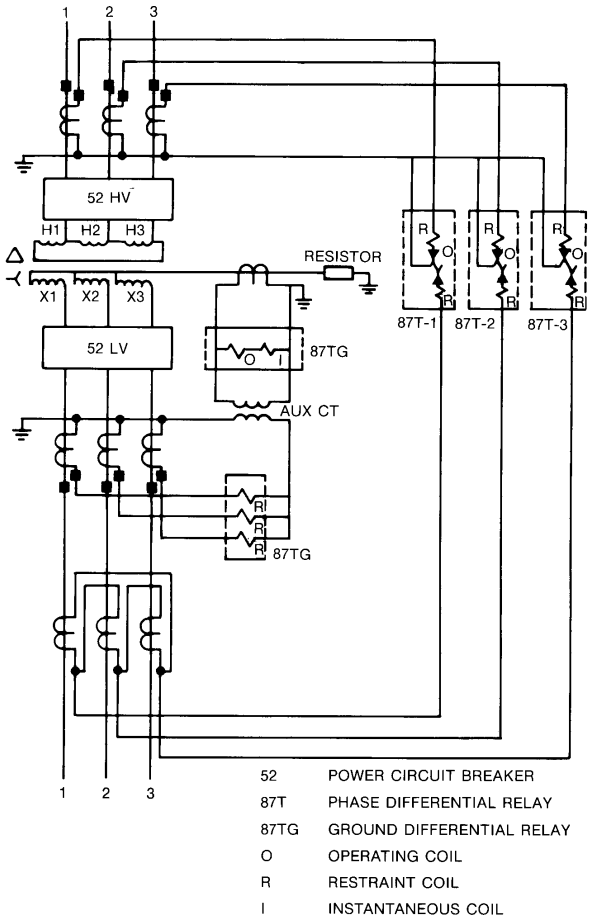

Figure 11-24—Transformer phase and ground differential relay CT and current coil connections

The protection for a single-phase transformer is shown in Figure 11-25, although most transformer differential relay applications would apply to three-phase transformers of 5 MVA and larger.

In Figure 11-25, two restraining windings and one operating coil are shown. The CT ratios are selected to produce essentially equal secondary currents so that, under a no-fault condition, the CT secondary current entering one restraining circuit continues through the other restraining circuit, with no differential current to pass through the operating circuit. Because

Copyright © 2001 IEEE. All rights reserved.

Copyright The Institute of Electrical and Electronics Engineers, Inc.
Provided by IHS under license with IEEE
No reproduction or networking permitted without license from IHS
Not for Resale

of ratio mismatches in CTs and relay tap settings, some current may always exist in the operating circuit under a no-fault condition.

When a fault is internal to the differential relay zone, definite quantities of current flow into the operating circuit. The relay then responds to this differential current based on the ratio of the operating current to the restraining currents. The relay operates to trip when this ratio exceeds the slope setting and is above the relay minimum sensitivity. (Ratio settings of 15%, 25%, 30%, or 40% are usually available.) The three-phase connection shown in Figure 11-26 illustrates a typical application for protection of a three-phase transformer. The transformer is connected wye-delta: this configuration is selected generally to provide an ungrounded secondary connection while permitting the primary wye neutral to be grounded solidly. Other configurations would be reversed, and the grounded wye would be the secondary connection. The basic delta-wye or wye-delta connection produces a phase shift between current entering the primary and current leaving the secondary. For this reason, the CTs on the wye side have their secondaries connected in delta, and the CTs on the delta side have their secondaries connected in wye.

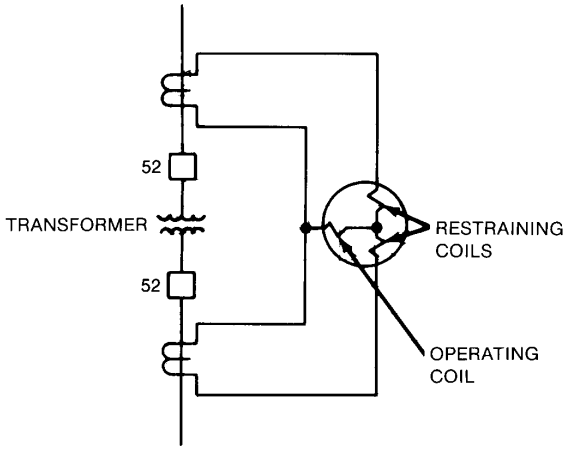

Figure 11-25—Percentage differential relays, which provide increased sensitivity while minimizing false operation as a result of CT mismatch errors for heavy through faults

Several considerations are involved in the application of differential relays:

a) The system should be designed so that the relays can operate a transformer primary circuit breaker. If a remote circuit breaker is to be operated, a remote trip system should be used (e.g., a pilot wire, a high-speed grounding switch). Often the utility controls the remote circuit breaker and may not allow it to be tripped. Operation of a user-owned local primary circuit breaker presents no problem.

b) CTs associated with each winding typically have different ratios, ratings, and excitation characteristics when subjected to heavy loads and short circuits. Multiratio CTs

Copyright © 2001 IEEE. All rights reserved.

Copyright The Institute of Electrical and Electronics Engineers, Inc.
Provided by IHS under license with IEEE
No reproduction or networking permitted without license from IHS
Not for Resale

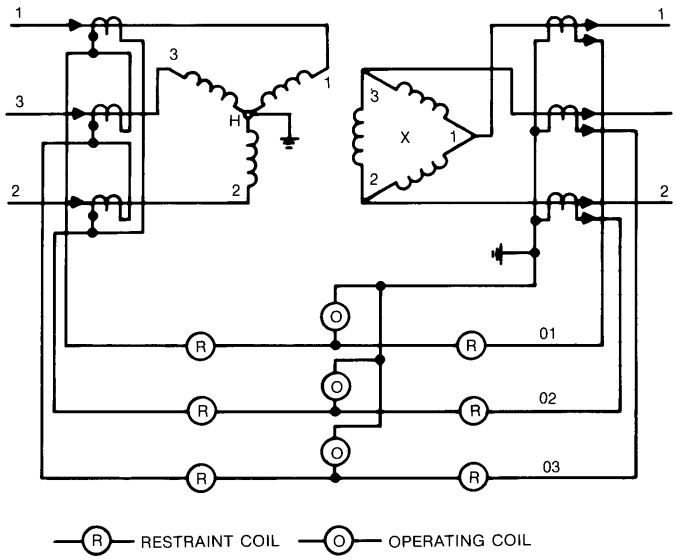

Figure 11-26—Typical schematic connections for percentage differential protection of a wye-delta transformer

and relay taps may be selected to compensate for ratio differences. A less preferable but acceptable method is to use auxiliary transformers.

c) Transformer taps can be operated changing the effective turns ratio. By selecting the ratio and taps for midrange, the maximum unbalance will be equivalent to half the transformer tap range.

d) CTs of the same make and type are recommended to minimize error current due to the CT's different characteristics.

e) Magnetizing inrush current appears as an internal fault to the differential relays. The relays should be desensitized to the inrush current, but they should be sensitive to short circuits within the protection zone during the same period. This goal can be accomplished using relays with harmonic restraint. The magnetizing current inrush has a large harmonic component, which is not present in short-circuit currents. This feature permits harmonic-restraint relays to distinguish between faults and inrush.

f) Transformer connections often introduce a phase shift between high- and low-voltage currents. Proper CT connections compensate for this shift. For a delta-primary, wye-secondary transformer, CTs are normally wye connected in the primary and delta connected in the secondary.

g) Heavy currents for faults outside the zone of protection can cause an unbalance between the CTs. Percentage differential relays shown in Figure 11-25, which operate when the difference is greater than a definite percentage of the phase current, are designed to overcome this problem. Percentage differential relays also help in solving the tap-changing problem and the CT ratio balance problem. Percentage slopes vary by manufacturer, but are generally available from 15% to 60%. A slope of 15% is normally used for standard transformers, 25% for load tap-changing transformers, and 40% to 60% for special applications. Guidelines are provided in 4.4.15.3 on

Copyright © 2001 IEEE. All rights reserved.

Copyright The Institute of Electrical and Electronics Engineers, Inc.
Provided by IHS under license with IEEE
No reproduction or networking permitted without license from IHS
Not for Resale

selecting the slope. Harmonic-restraint percentage differential relays are recommended for transformers rated 5000 kVA and above.

Unlike the differential relays applied to protect high-voltage buses or large motors, the transformer differential relay application has both harmonics and phase shift to consider. Although all transformer differential relays do not include harmonic filters, the use of harmonic filters has been beneficial and faster acting, and they permit more sensitive pickups.

h) A delta-wye, or wye-delta, transformer with the neutral grounded is a source (i.e., generator) of zero-sequence (or ground) fault current. A ground fault on the wye side of the transformer, external to the differential protective zone, causes zero-sequence currents to flow in the CTs on the wye side of the transformer without corresponding current flow in the line CTs on the delta side of the transformer. If these zero-sequence currents are allowed to flow through the differential relays, they cause immediate undesired tripping. To prevent such undesired tripping, the CT connections should cause the zero-sequence currents to flow in a closed-delta CT secondary connection of low impedance instead of in the differential relay operating coil. This goal is readily accomplished by connecting the CT secondary in delta on the wye side of the transformer.

In addition to the phase shift, which is easily corrected, the magnitudes of the secondary currents rarely match each other when standard CT ratios are employed. To compensate for this tendency, most percentage differential relays have selectable auto transformer taps at the input of each restraining winding. By following the relay instructions, the best match can be made so that the current in the no-fault operating coil is minimized. In some cases where high-voltage switchyards are involved, the available relay adjustments on electromechanical relays are inadequate, due to the limited tap range available. Therefore, auxiliary CTs or autotransformers are needed. This configuration should be attempted only after a thorough examination of the effects of through faults and secondary burdens upon the primary CTs. Solid-state relays typically have a wide tap range with incremental selectivity that allows reduced mismatch to below 2%. This setup eliminates the need for auxiliary or autotransformers.

Assuming that CT ratio and phase shift problems can be resolved, a transformer secondary may often be connected to more than one bus. In that event, a separate restraining winding is required for each such bus. Paralleling CT secondaries in place of multiple restraining windings can lead to misoperation on through faults if the secondary buses are strong fault-current sources. If they are only weak sources, then paralleled CT secondaries are acceptable.

Harmonics in the primary circuit can develop during transformer energization, during overvoltage periods, and during through faults. The harmonics could cause differential relay misoperation if not recognized. For the most part, zero-sequence harmonics (e.g., third, ninth) are excluded from the relays by the CT secondary connection.

The second harmonic and some relays with higher harmonics (e.g., fifth, seventh, eleventh, thirteenth) are filtered to restrain them. The filtered harmonics are applied to the restraining winding when the magnitude of the second harmonic exceeds 7.5% to 20% of the fundamen-

Copyright © 2001 IEEE. All rights reserved.

Copyright The Institute of Electrical and Electronics Engineers, Inc.
Provided by IHS under license with IEEE
No reproduction or networking permitted without license from IHS
Not for Resale

tal current. The lower percentage is beneficial during normal no-fault conditions because it provides larger restraining action, but the lower percentage setting makes the relay less sensitive on an internal fault.

11.9.2.2.4.2 Ground differential relays

Protection of the transformer by percentage differential relays improves the overall effectiveness in detecting phase-to-phase internal faults. However, line-to-ground faults in a wye winding may not be detected if the transformer is low-resistance-grounded where ground-fault current is limited to a low value below the differential relay pickup level. Such ground faults may evolve into to a destructive phase-to-phase fault. A protection scheme for low-resistance-grounded system is shown in Figure 11-24. Where the transformer is solidly grounded, the transformer differential relay operates for ground faults within the differential protective zone.

Two methods can be easily adapted for protecting the wye winding more effectively. Figure 11-27 illustrates one approach that employs an overcurrent relay in a differential connection. The zero-sequence currents are shown for an external fault. Properly connected, the secondary current circulates for this external fault, but would be additive for an internal fault and cause Device 51G to operate. The method shown in Figure 11-27 is susceptible to through faults that may saturate the phase CTs and cause Device 51G to operate. For this reason CT selections are more demanding and Device 51G settings are less sensitive than would originally appear.

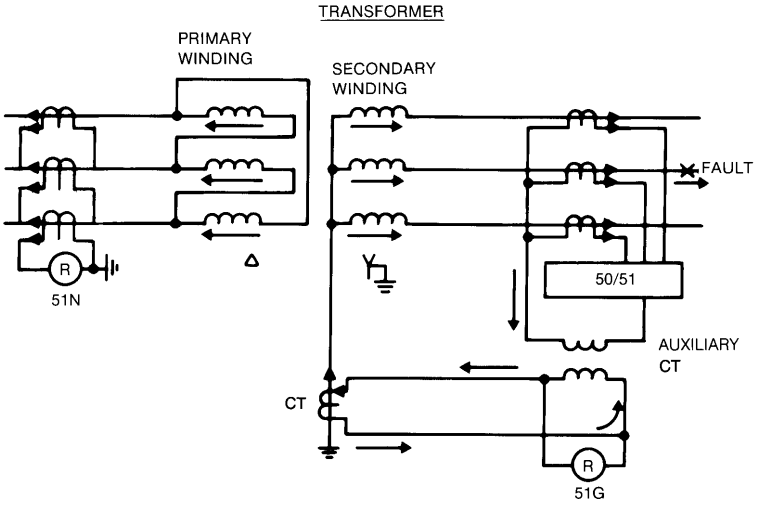

NOTE—Zero-sequence current arrows are for an external ground fault for which the relay does not operate.

Figure 11-27—Complete ground-fault protection for delta-wye transformer, using residual overcurrent and differentially connected ground relay

Copyright © 2001 IEEE. All rights reserved.

Copyright The Institute of Electrical and Electronics Engineers, Inc.
Provided by IHS under license with IEEE
No reproduction or networking permitted without license from IHS
Not for Resale

Utilizing a directional relay shown in Figure 11-28 can overcome problems associated with CT saturation on through faults. The currents shown are for an external fault, and the secondary currents circulate as shown. However, upon an internal fault, the secondary currents are additive in the operating coil as shown in Figure 11-29. This directional relay has the additional element that prevents misoperation and, in fact, permits a faster acting relay: a product relay that can operate in less than a cycle. Comparing this operating time to the seconds taken by a Device 51G relay makes the choice more definitive.

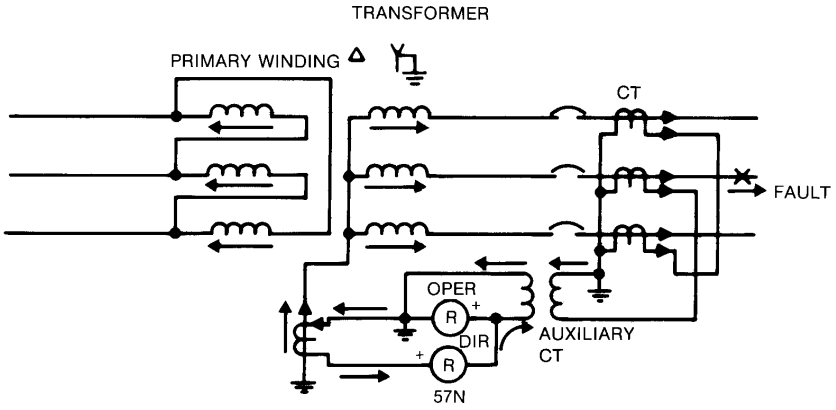

NOTE–Zero-sequence current arrows are for an external ground fault for which the relay does not operate.

Figure 11-28—Directional relay for detection of ground faults in grounded wye-connected transformer

In any ground-fault differential relay application, selection of CT ratios is important. The neutral CT ratio is generally smaller than the phase CT. In such cases, the auxiliary CT in the residual secondary can correct this mismatch. Some users select the auxiliary CT ratio so that slightly more restraining current flows during an external fault, as shown in Figure 11-30. In effect, this excess secondary current flows in the opposite direction in the operating winding and precludes false operation.

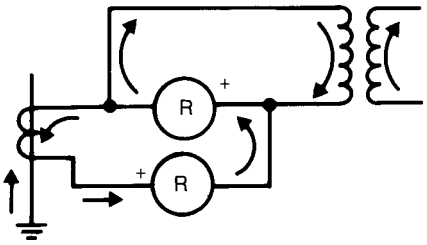

Figure 11-29—Relay current during transformer internal faults

Copyright © 2001 IEEE. All rights reserved.

Copyright The Institute of Electrical and Electronics Engineers, Inc.
Provided by IHS under license with IEEE
No reproduction or networking permitted without license from IHS
Not for Resale

11.9.2.3 Network protectors

The network protector is normally flange mounted directly on the network transformer low-voltage terminals. The network protector contains the following components: low-voltage air circuit breaker, controls for the air circuit breaker, and network relays. Network protectors trip for faults occurring on the primary side of the network transformer and/or when a power reversal occurs with power flowing from the secondary side of the network transformer to the primary side. The wattvar network master relay has superior operating characteristics over the standard watt network master relay. If a primary-side line-to-ground fault occurs and a single primary fuse operates without tripping the feeder breaker, the unfaulted phases may still supply power to the network. Under these conditions, the net three-phase power flow in the network protector is not in the reverse direction, and the standard watt master relay does not operate. The reactive flow (vars) in the network protector is in the reverse direction. The wattvar master relay properly connected to see this reverse reactive flow operates for this condition.

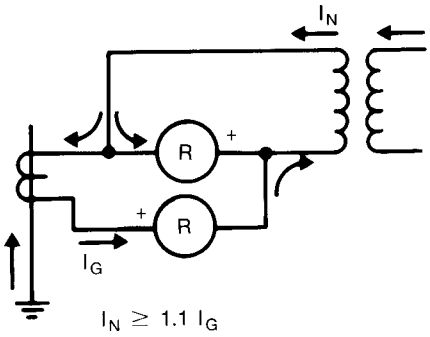

Figure 11-30—Relay current during external fault when auxiliary CT ratio is selected to restrain

11.9.3 Protection against overvoltages

Transient overvoltages produced by lightning, switching surges, switching of power factor correction capacitors, and other system disturbances can cause transformer failures. High-voltage disturbances can be generated by certain types of loads and from the incoming line. A common misconception is that underground services are isolated from these disturbances. System insulation coordination in the use and location of primary and secondary surge arresters is important. Normally, liquid-insulated transformers have higher basic impulse insulation level (BIL) ratings than standard ventilated dry and sealed dry transformers. Solid dielectric cast coil transformers have BILs equal to liquid-insulated transformers. Ventilated dry transformers and sealed dry transformers can be specified to have BILs equal to the BILs of liquid transformers.

11.9.3.1 Surge arresters

Ordinarily, if the liquid-insulated transformer is supplied by enclosed conductors from the secondaries of transformers with adequate primary surge protection, additional protection

Copyright © 2001 IEEE. All rights reserved.

Copyright The Institute of Electrical and Electronics Engineers, Inc.
Provided by IHS under license with IEEE
No reproduction or networking permitted without license from IHS
Not for Resale

may not be required, depending on the system design. However, if the transformer primary or secondary is connected to conductors that are exposed to lightning, the installation of surge arresters is necessary. For best protection, the surge arrester should be mounted as close as possible to the transformer terminals, preferably within 1 m and on the load side of the incoming switch. This location ensures that the lead inductance does not affect the impedance adversely and, therefore, affect the performance of the surge arrester and surge capacitor. If the surge arrester is built into the transformer, further engineering is required to determine whether additional surge protection is required on the secondary.

The degree of surge protection obtained is determined by the amount of exposure, the size and importance of the transformer to the system, and the type and cost of the arresters. In descending order of cost and degree of protection, the types of arresters are station, intermediate, and distribution.

Ventilated dry and sealed dry transformers are normally used indoors, and surge protection is still necessary. Because all systems have the potential for transmitting and reflecting primary and secondary surges caused by lightning and system disturbances, special low-sparkover distribution arresters and low-voltage arresters have been developed for the protection of dry transformers and rotating machinery.

The surge arrester selection (i.e., kV class) should be based on the system voltage and system conditions (i.e., grounded or ungrounded). The arrester kV class is not determined by the kV class of the primary winding of the transformer.

11.9.3.2 Surge capacitors

Additional protection in the form of surge capacitors located as closely as possible to the transformer terminals may also be appropriate for all types of transformers. The installation should be examined for excess capacitance already existing in the shielded conductors. Transformer windings can experience a nonuniform distribution of a fast-front surge in the winding, and this surge can overstress the turn insulation locally in parts of the windings. Surge capacitors serve a dual function of sloping off fast-rising transients that might impinge on the transformer winding and of reducing the effective surge impedance presented by the transformer to an incoming surge. This type of additional protection is appropriate against voltage transients generated within the system due to circuit conditions such as prestriking, restriking, high-frequency current interruption, multiple reignitions, voltage escalation, and current suppression (or chopping) as the result of switching, current-limiting fuse operation, thyristor-switching, or ferroresonance conditions.

11.9.3.3 Ferroresonance

Ferroresonance is a phenomenon resulting in the development of a higher than normal voltage in the windings of a transformer. These overvoltages may result in surge arrester operation, damage to the transformer, and electrical shock hazard. The following conditions combine to produce ferroresonance:

a) No load on the transformer

Copyright © 2001 IEEE. All rights reserved.

Copyright The Institute of Electrical and Electronics Engineers, Inc.
Provided by IHS under license with IEEE
No reproduction or networking permitted without license from IHS
Not for Resale

b) An open circuit on one of the primary terminals of the transformer and, at the same time, an energized terminal. In the case of three-phase transformers, either one or two of the three primary terminals may be disconnected.
c) The location of the point of disconnection if it is not close to the transformer
d) A voltage potential between the disconnected terminal conductor and ground

The resonant circuit may be traced from the energized terminal through the transformer primary to one of the disconnected terminals, then through the capacitance of the isolated terminal conductor insulation to ground, and then back through the supply system to the energized terminal (see Figure 11-31). Although more common with underground distribution systems, ferroresonance can occur with overhead lines when the single-phase open point is far enough from the transformer. The typical scenarios for ferroresonance involve single-phase remote switching of an unloaded transformer, remote primary fuse operation on one phase, or failure of all three poles of a three-pole device to properly open accompanied by disconnection of the secondary load.

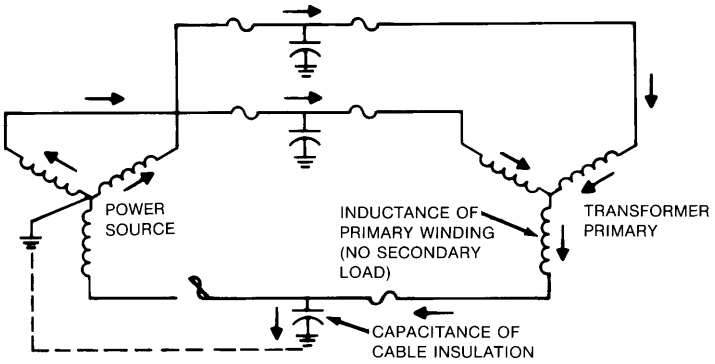

Figure 11-31—One-line diagram showing current flow that may result in ferroresonance

Ferroresonance may be minimized or eliminated by having load connected to the secondary when single-phase switching on the primary; by using gang-operated switches, circuit breakers, or circuit switchers on the primary; or by providing that current-interrupting devices are located next to or on the transformer.

The subject of ferroresonance is complicated, and the literature on this subject should be reviewed by concerned persons to avoid ferroresonance in transformer operation or system design.

11.10 Protection from the environment

In addition to electrical protection, protection for the transformer against physical conditions in the environment that may affect reliable performance is also necessary. Although most of these conditions are obvious, they are important enough to be listed. Undesirable conditions include

Copyright © 2001 IEEE. All rights reserved.

Copyright The Institute of Electrical and Electronics Engineers, Inc.
Provided by IHS under license with IEEE
No reproduction or networking permitted without license from IHS
Not for Resale

a) Average ambient temperatures above 30 °C when the transformer is loaded at rated kilovoltampere or more
b) Corrosive agents, abrasive particulate matter, and surface contaminants derived from the surrounding atmosphere
c) Conditions that can lead to moisture penetration or to condensation on windings and other internal electrical components
d) Submersion in water or mud
e) Obstruction to proper ventilation of liquid transformer radiators or, in the case of dry transformers, ventilating openings
f) Exposure to damage from collision by vehicles
g) Excessive vibration
h) Exposure to vandalism

11.11 Conclusion

Protection of today's larger and more expensive transformers can be achieved by the proper selection and application of protective devices. Published application guides covering transformers are readily available, for example, ANSI C37.91-2000. The system design engineer should rely heavily on sound engineering judgment to achieve an adequate protection system.

11.12 References

This recommended practice shall be used in conjunction with the following standards. When the following standards are superseded by an approved revision, the revision shall apply.

ANSI C37.91-2000, ANSI Guide for Protective Relay Applications to Power Transformers.

ANSI C57.92-2000, ANSI Guide for Loading Mineral-Oil-Immersed Power Transformers Up to and Including 100 MVA with 55 °C or 65 °C Winding Rise.[3]

IEEE Std 141-1993 (Reaff 1999), IEEE Recommended Practice for Electric Power Distribution for Industrial Plants (*IEEE Red Book*).[4]

IEEE Std 493-1997, IEEE Recommended Practice for the Design of Reliable Industrial and Commercial Power Systems *(IEEE Gold Book)*.

IEEE Std C57.12.00-2000, IEEE Standard General Requirements for Liquid-Immersed Distribution, Power, and Regulating Transformers.

[3]ANSI publications are available from the Sales Department, American National Standards Institute, 11 West 42nd Street, 13th Floor, New York, NY 10036, USA. (http://www.ansi.org)

[4]IEEE publications are available from the Institute of Electrical and Electronics Engineers, 445 Hoes Lane, P.O. Box 1331, Piscataway, NJ 08855-1331, USA (http://standards.ieee.org/).

Copyright © 2001 IEEE. All rights reserved.

Copyright The Institute of Electrical and Electronics Engineers, Inc.
Provided by IHS under license with IEEE
No reproduction or networking permitted without license from IHS
Not for Resale

IEEE Std C57.91-1995, IEEE Guide for Loading Mineral-Oil-Immersed Power Transformers.

IEEE Std C57.96-1999, IEEE Guide for Loading Dry-Type Distribution and Power Transformers.

IEEE Std C57.109-1993, IEEE Guide for Liquid-Immersed Transformer Through-Fault-Current Duration.

NFPA 70-1999, National Electrical Code® (NEC®).[5]

11.13 Bibliography

[B1] AIEE Committee Report, "Bibliography of Industrial System Coordination and Protection Literature," *IEEE Transactions on Industry Applications*, vol. IA-82, pp. 1–2, Mar. 1963.

[B2] *Applied Protective Relaying*. Newark, NJ: Westinghouse Electric Corporation, 1976.

[B3] *The Art of Protective Relaying*. Philadelphia: General Electric Company, Bulletin 1768.

[B4] Beeman, D. L., ed., *Industrial Power Systems Handbook*. New York: McGraw-Hill, 1955.

[B5] Blackburn, J. L., *Protective Relaying, Principles and Applications*, 2nd ed. New York: Mercel Dekker, Inc., 1998.

[B6] Boyaris, E., and Buyot, W. S., "Experience with Fault Pressure Relaying and Combustible Gas Detection in Power Transformers," *Proceedings of the American Power Conference*, vol. 33, pp. 1116–1126, Apr. 1971.

[B7] Brubaker, J. F., "Fault Protection and Indication on Substation Transformers," *IEEE Transactions on Industry Applications*, vol. IA-14, May/June 1977.

[B8] Burgin, E. R., "A Comparison of Protective Methods and Devices for Industrial Power Transformers," *Proceedings of the American Power Conference*, vol. 26, pp. 931–938, Apr. 1964.

[B9] Dickinson, W. H., "Report on Reliability of Electric Equipment in Industrial Plants," *AIEE Transactions on Industry Applications*, pt. II, vol. IA-81, pp. 132–151, July 1962.

[B10] Dudor, J. S., and Padden, L. K., "Problems and Solutions for Protective Relay Applications in Petroleum Facilities—Some Protection Applications for Generators and Transformers," IEEE IAS PCIC Conference Record, pp. 131–144, 1995.

[5]The NEC is published by the National Fire Protection Association, Batterymarch Park, Quincy, MA 02269, USA (http://www.nfpa.org/). Copies are also available from the Institute of Electrical and Electronics Engineers, 445 Hoes Lane, P.O. Box 1331, Piscataway, NJ 08855-1331, USA (http://standards.ieee.org/).

 Copyright © 2001 IEEE. All rights reserved.

Copyright The Institute of Electrical and Electronics Engineers, Inc.
Provided by IHS under license with IEEE
No reproduction or networking permitted without license from IHS Not for Resale

[B11] IEEE Std C57.12.01-1998, IEEE Standard General Requirements for Dry-Type Distribution and Power Transformers Including Those With Solid-Cast and/or Resin-Encapsulated Windings.

[B12] IEEE Std C57.94-1982 (Reaff 1987), IEEE Recommended Practice for Installation, Application, Operation, and Maintenance of Dry-Type General Purpose Distribution and Power Transformers.

[B13] IEEE Std C57.100-1999, IEEE Standard Test Procedures for Thermal Evaluation of Liquid-Immersed Distribution and Power Transformers.

[B14] IEEE Std C57.104-1991, IEEE Guide for the Interpretation of Gases Generated in Oil-Immersed Transformers.

[B15] IEEE Std C57.106-1991 (Reaff 1998), IEEE Guide for Acceptance and Maintenance of Insulating Oil in Equipment.

[B16] IEEE Std C57.110-1998, IEEE Recommended Practice for Establishing Transformer Capability When Supplying Nonsinusoidal Load Currents.

[B17] IEEE Std C57.111-1989 (Reaff 1995), IEEE Guide for Acceptance of Silicone Insulating Fluid and its Maintenance in Transformers.

[B18] IEEE Std C57.115, Loading > 100 MVA.

[B19] IEEE Std C57.121-1998, IEEE Guide for Acceptance and Maintenance of Less Flammable Hydrocarbon Fluid in Transformers.

[B20] Mason, C. R., *The Art and Science of Protective Relaying*. New York: John Wiley & Sons, 1956. Reprinted by General Electric Company, GER-3738.

[B21] Mathur, B. K., "A Closer Look at the Application and Setting of Instantaneous Devices," Presented at I&CPS Technical Conference, Seattle, WA, Paper #CH1460-5/79/0000-0107, 1979.

[B22] PES Committee Report, "A Relay Performance Considerations with Low Ratio Cts and High Fault Currents," *IEEE Transactions on Industry Applications*, vol. 31, no. 2, pp. 392–393, Mar./Apr. 1995.

[B23] St. Pierre, C. R., and Wolney, T. E., "A Standardization of Benchmarks for Protective Device Time Current Curves," *IEEE Transactions on Industry Applications*, vol. 1A-22, no. 4, pp. 623–632, July/Aug. 1986.

[B24] Zolar, D. A., "A Guide to the Application of Surge Arresters for Transformer Protection," *IEEE Transactions on Industry Applications*, vol. IA-15, Nov./Dec. 1979.

Copyright © 2001 IEEE. All rights reserved.

--`,,`,,`-`-`,,`,,`,`,,`---

Copyright The Institute of Electrical and Electronics Engineers, Inc.
Provided by IHS under license with IEEE
No reproduction or networking permitted without license from IHS
Not for Resale

--`,,`,,`-`-`,,`,,`,`,,`---

Copyright The Institute of Electrical and Electronics Engineers, Inc.
Provided by IHS under license with IEEE
No reproduction or networking permitted without license from IHS

Not for Resale

Chapter 12
Generator protection

12.1 Introduction

Industrial and commercial power systems may include generators as a local source of energy. These generators supply all or part of the total energy required, or they provide emergency power if the normal source of energy fails. The application of generators can be classified as single-isolated generators, multiple-isolated generators, unit-connected generators, cogeneration generators, and induction generators.

Generator protection requires the consideration of many abnormal conditions that are not present with other system elements. The abnormal conditions that may occur with generators include

- Overheating
  - Stator (due to overload or loss of cooling)
  - Rotor (due to overexcitation, loss of cooling)
- Winding faults
  - Stator (phase and ground faults)
  - Rotor (ground faults and shorted turns)
- Overspeed and underspeed
- Overvoltage
- Loss of excitation
- Motoring
- Unbalanced current operation
- Out of step
- Subsynchronous oscillations
- Inadvertent energization
- Nonsynchronized connection

Where the equipment is unattended, it should be provided with automatic stator and rotor protection against all harmful conditions. In installations where an attendant is present, use of alarms on some abnormal conditions may be preferable to removing the generator from service. Generator protective schemes vary depending on the objectives to be achieved.

12.2 Classification of generator applications

12.2.1 Single-isolated generators

Single-isolated generators are used to supply emergency power or for standby service and are normally shut down. They are operated for brief periods when the normal source fails or during maintenance, testing, and inspection. They are connected to the system load through an automatic transfer switch or through interlocked circuit breakers and are not operated in

Copyright © 2001 IEEE. All rights reserved.

Copyright The Institute of Electrical and Electronics Engineers, Inc.
Provided by IHS under license with IEEE
No reproduction or networking permitted without license from IHS
Not for Resale

parallel with other system power sources. They are driven by diesel engines or gas turbines with ratings from less than 100 kW up to a few megawatts. Generation is usually at utilization voltage level, typically 480 V or 480Y/277 V, but with larger machines the voltage may be 2.4 kV or 4.16 kV. These generators are designed to start, operate during a power failure, and to shut down when normal power is restored through automatic controls.

12.2.2 Multiple-isolated generators

A multiple-isolated generator application consists of several units operating in parallel without connection to any electric utility supply system. Examples of these installations are total energy systems for commercial and industrial projects, offshore platforms for drilling and production of energy sources, and other remote sites requiring continuous electric energy. The size of the individual generators may range from a few hundred kilowatts up to several megawatts depending on the system demand. The prime movers are typically gas turbines and oil-, gas-, or diesel-fueled engines. These systems are normally operated manually, but load-sensing controls and automatic synchronizing relays can be used. The rated voltage of these generators is usually at the utilization voltage or the highest distribution voltage level, or both, such as 4.16 kV or 13.8 kV.

Figure 12-1 shows a typical installation where generators are connected directly to a distribution system. If the system is effectively grounded ($X_0/X_1 \leq 3, R_0/X_1 \leq 1$), the generator neutral (or the neutral of the bus-grounding transformer if the generator neutral is isolated) is grounded with a neutral inductive reactance. If the system is not effectively grounded, as for some three-wire distribution systems, the generator neutral or grounding-transformer neutral is generally grounded through a low-ohmic-value resistor.

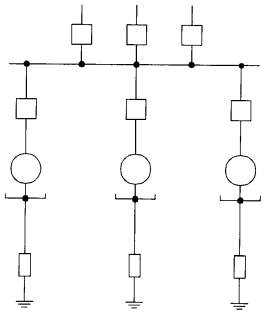

Figure 12-1—Generators connected directly to a distribution system

12.2.3 Large industrial generators

Large industrial generators are bulk power-producing units that operate in parallel with an electric utility supply system. All generated power is normally utilized by the industrial user. These units are used where a demand exists for low-pressure process steam, such as in petrochemical installations and in pulp and paper plants. The generator size may range from 10 000 kVA to 50 000 kVA. Operation is continuous at or near rated load, but may vary seasonally. The prime movers are usually steam or gas turbines depending on the process

Copyright © 2001 IEEE. All rights reserved.

Copyright The Institute of Electrical and Electronics Engineers, Inc.
Provided by IHS under license with IEEE
No reproduction or networking permitted without license from IHS Not for Resale

requirements, fuel availability, and system economics. Generation is usually at the highest voltage level, typically 12.47 kV or 13.8 kV, of the industrial plant systems. The majority of these machines are operated by attendants.

Figure 12-2 illustrates how to connect two or more generators to a system using one step-up transformer. Two or more generators are bussed at generator voltage and a two-winding grounded wye-delta unit transformer is used to connect the machines to the system. These approaches may be used with thermal, hydro, or combustion-turbine generators.

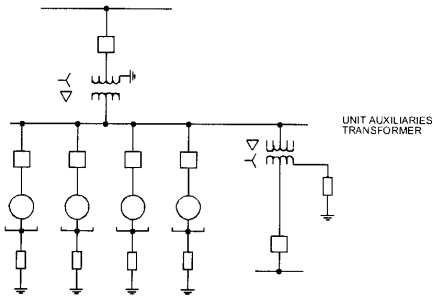

Figure 12-2—Generators sharing a transformer

Low-resistance grounding of the generators would be used in order to achieve selective ground-fault protection for the machines. In some instances, the generators may be high-resistance-grounded through a distribution transformer in order to minimize destructive iron-burning damage due to phase-to-ground faults. High-resistance grounding for multiple machines has the disadvantage that it does not provide sufficient current for selective relaying. To overcome this problem, a combination of zero-sequence voltage and directional ground-fault protection would need to be provided.

12.2.3.1 Unit generator-transformer configuration

In a unit generator-transformer configuration, a generator and its transformer (or unit transformer) are connected as a unit to the system as shown in Figure 12-3. The generator is usually wye-connected and high-resistance-grounded through a distribution transformer. The unit transformer is most commonly a grounded wye-delta connection.

The unit auxiliary transformers may be either two-winding or three-winding transformers, depending upon the size of the generator unit. In most instances, each unit auxiliary transformer is connected delta-wye with the neutral of the wye connected to ground through some impedance.

12.2.3.2 Cogeneration generators

Cogeneration is the simultaneous production of several forms of energy. Usually cogeneration involves the production of electric power and process steam within the plant. The Public Utilities Regulatory Act of 1978 (PURA) empowered the Federal Energy Regulatory Commission (FERC) to provide rules requiring electric utilities to buy power from or to sell power

Copyright © 2001 IEEE. All rights reserved.

--`,,`-`-`,,`,,`,`,,`---

Copyright The Institute of Electrical and Electronics Engineers, Inc.
Provided by IHS under license with IEEE
No reproduction or networking permitted without license from IHS
Not for Resale

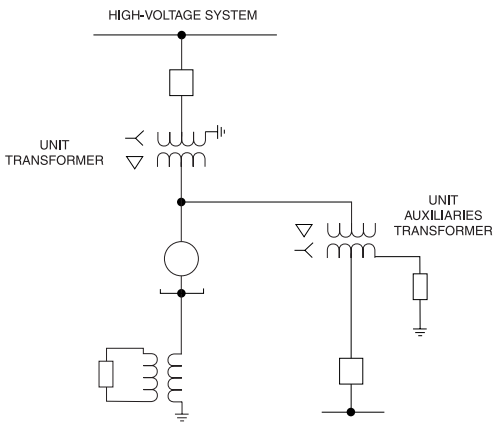

Figure 12-3—Unit generator-transformer configuration

to cogeneration operators. When the generated power exceeds the plant demand, the excess power flows out to the electric utility. Historically, power only flowed into the industrial plant. This power flow in either direction significantly impacts the electrical protection at the intertie between the utility and the industrial, but has only minor significance for the generator protection.

12.2.4 Induction generators

An induction generator is physically the same machine as an induction motor. The induction generator is operated slightly above synchronous speed rather than below as for an induction motor. It takes its excitation from the power system. Induction generators are subject to overspeed conditions on load rejection. The three-phase fault contribution from an induction generator duration is short compared to a synchronous generator. Additional electrical protection functions may be required in the interconnection (i.e., over and under voltage).

12.3 Short-circuit performance

12.3.1 General considerations

The proper application of several generator protective devices requires the knowledge of the short-circuit performance of the generator. The magnitude of generator fault current is a function of the armature and field characteristics, time, and the loading conditions immediately preceding the fault. The ability of the generator to sustain an output current during a fault is determined by the characteristics of the excitation system.

12.3.2 Excitation systems

Some excitation systems do not have the ability to sustain the short-circuit current. The magnitude of fault current is determined only by the subtransient and transient reactance, decays as determined by their respective time constants, and can be essentially zero in 1.0 s to 1.5 s. An example of a system with these characteristics is the static exciter generator, which

Copyright © 2001 IEEE. All rights reserved.

Copyright The Institute of Electrical and Electronics Engineers, Inc.
Provided by IHS under license with IEEE
No reproduction or networking permitted without license from IHS
Not for Resale

obtains all of its excitation energy from the generator terminal voltage. The excitation systems of round (or cylindrical) rotor generators, typically two-pole machines above 10 MVA, have the capability to support a sustained three-phase fault current corresponding to the current limited by transient reactance for a period of several seconds. These machines may have a brushless excitation system, although some units may be equipped with a static exciter using slip rings to obtain its excitation energy from both generator potential transformers and current transformers (CTs).

Salient-pole machines that range in size from a few kilowatts up to the round rotor machine sizes are typically capable of supporting a fault current at 300% of generator full-load current. Such units typically have a brushless exciter where the exciter delivers three-phase ac to rotating rectifiers that are connected directly to the field. Excitation energy to the exciter field is supplied to maintain the maximum fault-current magnitude.

Four basic types of excitation systems are used to control the output of ac machines:

— The dc generator-commutator exciter
— The alternator-rectifier exciter with stationary rectifier system
— The alternator-rectifier exciter with rotating rectifier system
— The static excitation system

In terms of response times, excitation systems fall into two categories: rotating and static. Rotating exciters respond at a slower rate than static exciters. The speed of response of the excitation system is commonly expressed in terms of the response ratio, which indicates the speed of response during 0.5 s after a sudden 20% reduction in generator terminal voltage. Rotating exciters have response ratios in the range of 0.5 to 1.0 per-unit exciter V/s. Static exciters have response ratios in the range of 2.5 to 3.5 per-unit exciter V/s. The detailed effects of the excitation system response ratio on the fault current characteristics is well-documented in the references [B11]. While a detailed description of these systems is beyond the scope of this chapter, their general characteristics will be briefly described in 12.3.2.1 through 12.3.2.4.

12.3.2.1 System with dc generator-commutator exciter

Figure 12-4 shows a schematic of the primary elements of a system with a dc generator-commutator exciter.

NOTE—Not shown on this diagram nor in Figure 12-5 through Figure 12-7 are the power supplies (e.g., pilot exciters, the current, potential intelligence inputs to the excitation control) because essentially they are functionally the same for all systems.

In a system with a dc generator-commutator exciter, a dc control signal is fed from the excitation control to the stationary field of the dc exciter. The rotating element of the exciter then supplies a dc through a field breaker to the field winding of the main ac generator. The rotating armature of the dc exciter is either driven from the same shaft as the rotating main field of the generator or can be on a separate motor-driven shaft. In either case, a dc commutator is required on the exciter, and brushes and collector rings are required on the rotating generator

Copyright © 2001 IEEE. All rights reserved.

Copyright The Institute of Electrical and Electronics Engineers, Inc.
Provided by IHS under license with IEEE
No reproduction or networking permitted without license from IHS
Not for Resale

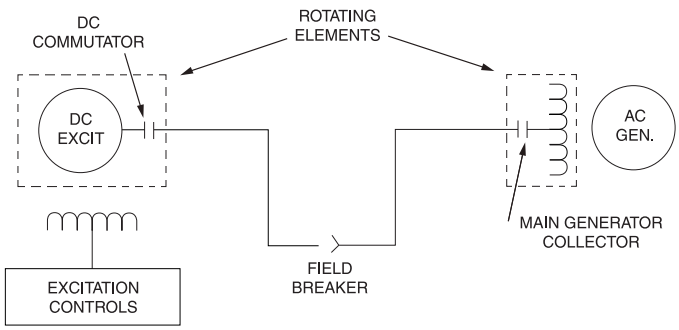

Figure 12-4—System with dc generator-commutator exciter

field to transmit the main generator field current. This system is used only on smaller or older machines.

12.3.2.2 System with alternator-rectifier exciter and stationary rectifiers

To eliminate the problems of high-current commutation for medium and large machines, the dc exciter is replaced by an alternator. The system of Figure 12-5 uses an alternator with a rotating dc field winding driven from the shaft of the main ac generator. Current for this field winding is obtained from the excitation controls through brushes and collector rings. The three-phase ac output of the alternator is rectified through a stationary three-phase diode bridge, and the dc output is fed to the field winding of the generator through brushes and collector rings.

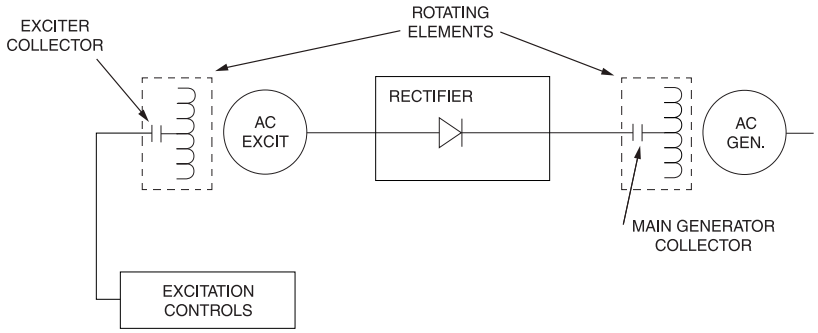

Figure 12-5—System with alternator-rectifier exciter and stationary exciter

12.3.2.3 System with alternator-rectifier exciter and rotating rectifiers (brushless exciters)

The system of Figure 12-6 again uses an alternator; but, by mounting the dc field winding on the stator of the exciter and the ac armature winding on the rotor, all brushes and commutators have been eliminated. In this system, the ac armature of the exciter, the rotating three-phase diode bridge rectifier, and the main field of the ac generator are all mounted on the same rotating shaft system. All electrical connections are made along or through the center of this shaft.

Copyright © 2001 IEEE. All rights reserved.

Copyright The Institute of Electrical and Electronics Engineers, Inc.
Provided by IHS under license with IEEE
No reproduction or networking permitted without license from IHS
Not for Resale

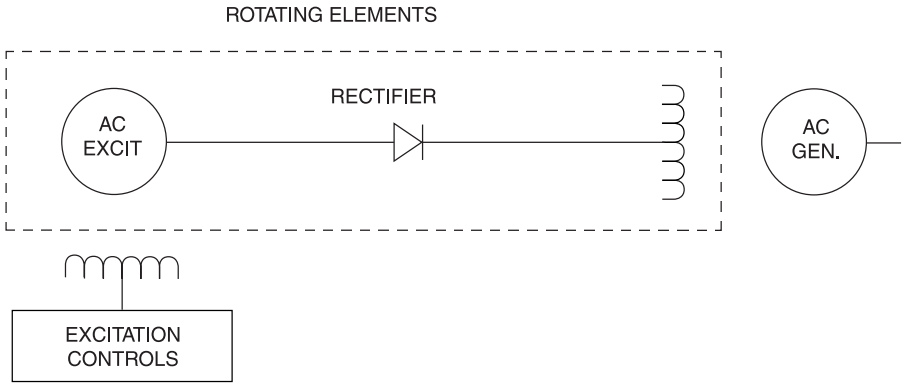

Figure 12-6—System with alternator-rectifier exciter and rotating rectifiers (brushless exciters)

12.3.2.4 System with static exciter

The schemes in 12.3.2.1 through 12.3.2.3 utilize the energy directly from the prime-mover shaft to obtain the required excitation power. Static excitation systems obtain this power from the electrical output of the generator or the connected system. In Figure 12-7, external power CTs or power voltage transformers (VTs), or both, feed rectifiers in the regulating system which, in turn, supply dc to the main field winding of the generator through brushes and collector rings.

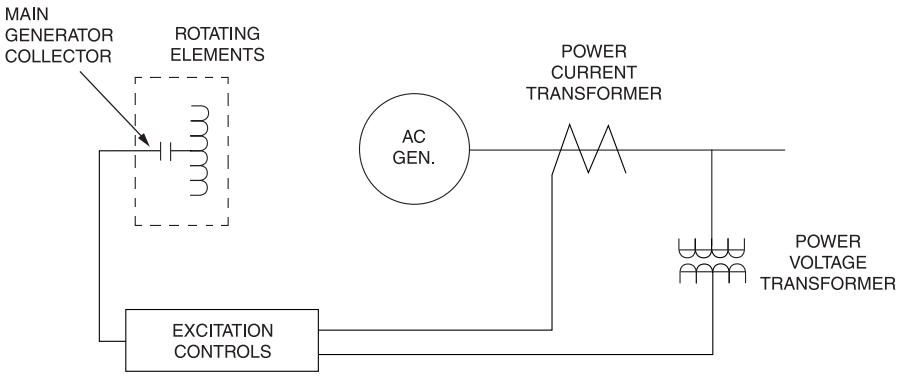

Figure 12-7—System with static exciter

Some systems use only potential transformers as input power, while some use additional CTs to boost the input during fault conditions when the terminal voltage is reduced. During close-in faults, excitation systems using only potential transformers as input power may be unable to sustain fault currents long enough for the protective relaying to operate [B11].

Copyright © 2001 IEEE. All rights reserved.

Copyright The Institute of Electrical and Electronics Engineers, Inc.
Provided by IHS under license with IEEE
No reproduction or networking permitted without license from IHS
Not for Resale

12.3.3 Generator decrement characteristics

The current output of a generator with a fault at or near its terminals consists of two components, both of which have a time variable rate of decay, depending on machine constants. The two components are the symmetrical ac current i_{ac} and the unidirectional offset current i_{dc}. The ac component decays with time according to the pattern shown in Figure 12-8. The sudden drop, 1-2, is a function of the subtransient values of machine internal voltage, reactance, and short-circuit time constant. The more gradual drop toward steady state, 2-4, is a function of the transient values of machine internal voltage, reactance, and short-circuit time constant. The dc offset current, 1-3, is a function of the subtransient reactance and the armature short-circuit time constant. The steady-state component, 4, and beyond is a function of the generator synchronous reactance and field current. The maximum symmetrical current that a generator can deliver on a bolted three-phase fault is determined by the subtransient reactance X_d''. This reactance ranges from a minimum of 9% for a two-pole round rotor machine to 32% for a low-speed salient-pole hydrogenerator. Thus, the initial symmetrical fault current (i.e., 1–5 cycles) can be as great as 11 times the generator full-load current. In the intermediate period (i.e., 5–200 cycles), the transient reactance X_d' determines the magnitude of the ac component. The synchronous reactance, which may vary from a value of 120% to 240%, determines the sustained value of the ac component of the fault current. The sustained fault current, assuming no initial load and no change in the voltage regulator setting, can be as low as 42% of the generator full-load current. Because the no-load fixed field current results in the longest relay operating times, the stuck regulator condition should be considered as the criteria for the relay settings. Regulator response normally occurs, however, and produces sustained fault currents at much higher levels. The generator decrement curves can be calculated from the procedure in 12.3.3.1 through 12.3.3.4. The initial loading condition, initial terminal voltage, and the field forcing capability can all be included in these calculations.

12.3.3.1 Total ac component of armature current

The total ac component of armature current consists of the steady-state value i_d and two components that decay at a rate according to their respective time constants.

$$i_{ac} = (i_d'' - i_d')\varepsilon^{-t/T_d''} + (i_d' - i_d)\varepsilon^{-t/T_d'} + i_d$$

a) Subtransient component of the ac armature current, i_d'':

$$i_d'' = \frac{e''}{X_d''} \text{ pu}$$

$$e'' = e_t + X_d'' \sin\theta \text{ pu}$$

When machine is at no-load, $e'' = e_t$.

Copyright © 2001 IEEE. All rights reserved.

Copyright The Institute of Electrical and Electronics Engineers, Inc.
Provided by IHS under license with IEEE
No reproduction or networking permitted without license from IHS
Not for Resale

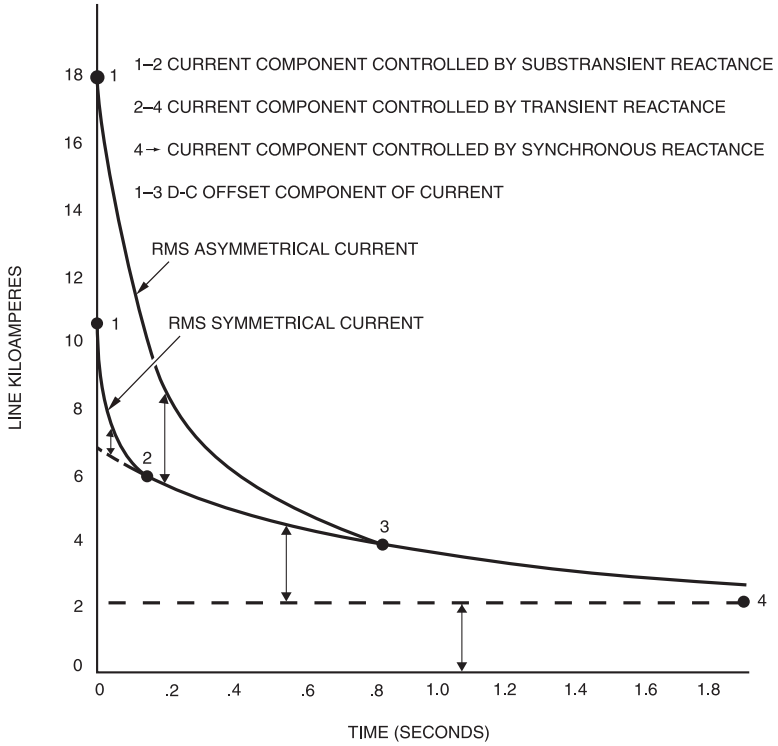

Figure 12-8—Typical generator decrement curve

b) Transient component of the ac armature current, i_d'':

$$i_d' = \frac{e'}{X_d'} \text{ pu}$$

$$e' = e_t + X_d' \sin\theta \text{ pu}$$

Again, at no-load, $e' = e_t$.

c) Steady-state component i_d. The steady-state component is the current finally attained and is a function of the field current:

$$i_d = \left(\frac{e_t}{X_d}\right)\left(\frac{I_F}{I_{Fg}}\right)$$

I_F is the actual prefault amperes at the initial loading conditions, either no-load or full-load; or, when regulator action is taken into consideration, it is the field amperes with maximum excitation voltage applied.

Copyright © 2001 IEEE. All rights reserved.

Copyright The Institute of Electrical and Electronics Engineers, Inc.
Provided by IHS under license with IEEE
No reproduction or networking permitted without license from IHS
Not for Resale

12.3.3.2 DC component of armature current

The dc component of armature current is controlled by the subtransient reactance and the armature time constant:

$$\sqrt{2} i_d'' \varepsilon^{-t/T_A}$$

12.3.3.3 Total root-mean-square (rms) current

The total rms current is the sum of the two components as follows:

$$i_{tot} = \sqrt{i_{\text{ac}}^{\ 2} + i_{\text{dc}}^{\ 2}}$$

12.3.3.4 Variables

The terms used in the expressions in 12.3.3.1 through 12.3.3.3 are defined as follows and are normally obtained from the generator manufacturer:

X_d'' is subtransient reactance, saturated value,
X_d' is transient reactance, saturated value,
X_d is synchronous reactance,
e_t is machine terminal voltage (per unit),
e'' is machine internal voltage behind X_d'',
e' is machine internal voltage behind X_d',
T_d'' is subtransient short-circuit time constant (s),
T_d' is transient short-circuit time constant (s),
T_A is armature short-circuit time constant (s),
I_{Fg} is field current at no-load rated voltage (V),
I_F is field current at given load condition,
θ is load power factor angle.

12.3.3.5 Example calculation

The following data were obtained from the generator manufacturer for a round (or cylindrical) rotor machine. Decrement curves, shown in Figure 12-9, are plotted for

a) Constant excitation at no initial load
b) Field current at 3 per unit of no-load value
c) Total current trace of Item b), which includes the dc component

Copyright © 2001 IEEE. All rights reserved.

Copyright The Institute of Electrical and Electronics Engineers, Inc.
Provided by IHS under license with IEEE
No reproduction or networking permitted without license from IHS
Not for Resale

The machine characteristics are

kVA = 19 500	x_d'' = 10.7%	I_{Fg} = 1 pu	T_d'' = 0.015 s
PF = 0.8	x_d' = 15.4%	I_F = 3 pu	T_d' = 0.417 s
voltage = 12.47 kV	x_d = 154%		T_A = 0.189 s
rated amperes = 903			

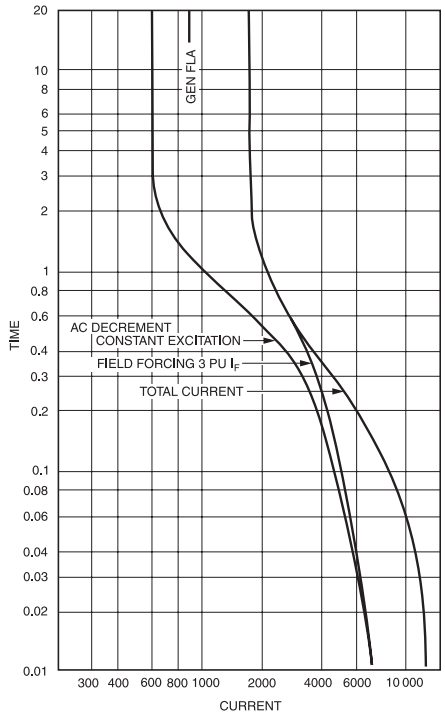

Figure 12-9—Generator decrement curve for a 19 000 kVA generator

12.4 Generator grounding

A common practice is to ground all types of generators through some form of external impedance. The purpose of this grounding is to limit the mechanical stresses and fault damage in the machine, to limit transient voltages during faults, and to provide a means for detecting ground faults within the machine. A complete discussion of all grounding and ground protection methods can be found in IEEE Std C37.101-1993[1] and IEEE Std C62.92-1989.

[1]Information on references can be found in 12.6.

Copyright © 2001 IEEE. All rights reserved.

Copyright The Institute of Electrical and Electronics Engineers, Inc.
Provided by IHS under license with IEEE
No reproduction or networking permitted without license from IHS
Not for Resale

The following methods, most commonly used for industrial generator grounding, are discussed in this chapter:

— High-resistance grounding
— Low-resistance grounding
— Reactance grounding
— Grounding-transformer grounding

Solid grounding of a generator neutral is not generally used because this practice can result in high mechanical stresses and excessive fault damage in the machine. According to ANSI C50.13-1989, the maximum stresses that a generator is normally designed to withstand are associated with the currents of a three-phase fault at the machine terminals. Because of the relatively low zero-sequence impedance inherent in most synchronous generators, a solid phase-to-ground fault at the machine terminals produces winding currents that are higher than currents for a three-phase fault. Therefore, to comply with ANSI C50.13-1989, generators should be grounded so that the maximum phase-to-ground fault current is limited to a magnitude equal to, or less than, the three-phase fault current.

Generators are not often operated ungrounded. While this approach greatly limits the phase-to-ground fault currents and consequently limits damage to the machine, it can produce high transient overvoltages during faults and also makes it difficult to locate the fault.

12.4.1 High-resistance grounding

In high-resistance grounding, a distribution transformer is connected between the generator neutral and ground, and a resistor is connected across the secondary. The primary voltage rating of the distribution transformer is usually equal to or greater than rated generator line-to-neutral voltage, while the secondary winding rating is 120 V or 240 V. The secondary resistor is selected so that, for a single phase-to-ground fault at the generator terminals, the power dissipated in the resistor is equal to or greater than three times the zero-sequence capacitive kilovoltampere to ground of the generator windings and of all other equipment that may be connected to the machine terminals. The calculation for sizing the resistor R utilizes the phase-to-ground capacitance X_{co} in the generator, bus, cable, transformers, and surge device. The resistor is sized to be

$$R \leq \frac{X_{co}}{3}$$

Because the resistor is in parallel with the distributed capacitance, the total zero-sequence current is greater than the capacitive charging current. With this resistor rating, the transient overvoltages during faults are kept to safe values. For a single phase-to-ground fault at the machine terminals, the primary fault current is limited to a value in the range of about 3 A to 25 A. If possible, the ground-fault current level should be chosen to coordinate with the primary fuses (when used) of wye-wye-connected VTs with grounded neutrals. Distribution transformers with internal fuses or circuit breakers should not be used. They could inadvertently be open, and the grounding and protection scheme could be inoperative at the time of fault.

Copyright © 2001 IEEE. All rights reserved.

Copyright The Institute of Electrical and Electronics Engineers, Inc.
Provided by IHS under license with IEEE
No reproduction or networking permitted without license from IHS
Not for Resale

In some cases, the distribution transformer is omitted, and a high value of resistance is connected directly between the generator neutral and ground. The resistor size is selected to limit ground-fault current to the range of 5 A to 10 A. While this method of grounding is used in Europe, the physical size of the resistors, the required resistor insulation level, and the cost may preclude the use of this method.

High-resistance grounding does not provide sufficient current for selective ground relaying of several machines connected to a common bus. Consequently, it is generally used with unit-system installations where a single generator is connected through its individual primary grounded wye/secondary delta step-up transformer (or transformers) to the system.

In a few cases, this type of grounding has been used when two or more generators are connected to one step-up transformer. However, with such a system, coordinating ground-fault protection is difficult, and shutting down all machines may be required to isolate a fault.

12.4.2 Low-resistance grounding

In low-resistance grounding, a resistor is connected directly between the generator neutral and ground. The resistor is selected to provide sufficient current for selective ground relaying of several machines or feeders, or both. In general, the grounding resistor is selected to limit the generator's contribution to a single phase-to-ground fault at the generator's terminals to a value in the range of 200 A to 400 A. Resistor cost and size usually preclude the use of resistors to limit the current below 200 A or to permit currents above machine-rated current.

Low-resistance grounding is generally used where two or more generators are bussed at generator voltage and connected to a system through one step-up transformer or where the generator is connected directly to a distribution system having a low-impedance-grounding source on the generator bus. The disadvantage of this method is that these values of ground-fault current may cause serious generator stator iron damage.

12.4.3 Reactance grounding

Reactance grounding uses an inductive reactance between the generator neutral and ground. The inductive reactance is selected to produce an X_0/X_1 ratio at the machine terminals in the range of 1 to 10. A common practice is to maintain an effectively grounded system by keeping the X_0/X_1 ratio at 3 or less. This method of grounding produces relatively high levels of phase-to-ground fault currents ranging from approximately 25% to 100% of the three-phase fault current.

Reactance grounding is generally used where the generator is connected directly to a solidly grounded distribution system.

12.4.4 Grounding-transformer grounding

Grounding-transformer grounding involves the use of a grounding transformer connected to the machine terminals or to the generator bus. The grounding may be provided by a zigzag transformer, by a grounded wye-delta transformer, or by a grounded wye-broken-delta

Copyright © 2001 IEEE. All rights reserved.

Copyright The Institute of Electrical and Electronics Engineers, Inc.
Provided by IHS under license with IEEE
No reproduction or networking permitted without license from IHS
Not for Resale

transformer with a resistor connected across a corner of the broken delta. When a zigzag or a grounded wye-delta transformer is used, the effective grounding impedance is selected to provide sufficient current for selective ground relaying.

The grounded wye-broken-delta transformer with a resistance in the corner of the broken delta is generally a high-resistance-grounded system. The resistance would be selected in the same manner as for the distribution transformer with secondary resistor. This method limits the single phase-to-ground fault current to a range of 3 primary A to 25 primary A.

A zigzag or grounded wye-delta transformer may be used as an alternate grounding source when a generator with neutral reactor grounding is connected directly to a distribution system. This approach can also be used where several ungrounded wye- or delta-connected generators are bussed at generator voltage.

A grounded wye-broken-delta transformer with a resistor across the corner of the broken delta may be used to provide a means for detecting ground faults in ungrounded wye- or delta-connected generators.

12.5 Protective devices

12.5.1 Generator stator thermal protection

Thermal protection for the generator stator core and windings may be provided for the following contingencies:

— Generator overload
— Failure of cooling systems
— Localized hot spots caused by core lamination insulation failures or by localized or rapidly developing winding failures

These phenomena are long term and not readily detected by other protective devices. In attended stations, the generator is rarely tripped on overtemperature. Instead, it is set to alarm and allows the operator to take the appropriate steps to reduce the generator temperature. In unattended stations, the generator may be tripped.

Resistance temperature detectors (RTDs) embedded in the generator stator windings are used to sense the actual winding temperature. Typically, six RTDs, two per phase, are installed and a selector switch provided to connect the thermal relay to the RTD indicating the highest operating temperature. Precaution should be taken to ensure that the resistance of the RTD matches the input resistance of the relay.

12.5.1.1 Generator overload

The continuous-output capability of a generator is expressed in kilovoltamperes available at the terminal at a specified frequency, voltage, and power factor. For hydrogen-cooled generators, the output rating is usually given at the maximum and several lesser hydrogen pressures.

Copyright © 2001 IEEE. All rights reserved.

Copyright The Institute of Electrical and Electronics Engineers, Inc.
Provided by IHS under license with IEEE
No reproduction or networking permitted without license from IHS Not for Resale

For combustion-turbine generators, this capability is given at an inlet air temperature of 15 °C at sea level. In general, generators can operate successfully at rated kilovoltamperes, frequency, and power factor for a voltage variation of 5% above or below rated voltage.

Under emergency conditions, it is permissible to exceed the continuous output capability for a short time. In accordance with ANSI C50.13-1989, the armature winding short-time thermal capability is given by the following:

Time (s)	10	30	60	120
Armature current (%)	226	154	130	116

where 100% current is the rated current of the machine at maximum hydrogen pressure.

12.5.1.1.1 Winding-temperature protection

Most generators are supplied with a number of temperature sensors to monitor the stator windings. These sensors are usually RTDs and thermocouples. As the name implies, the RTD detects temperature by the change in resistance of the sensor. A thermocouple detects temperature by the change in thermoelectric voltage induced at the thermocouple junction. These sensors are used to continuously monitor the stator winding. In attended generating stations, the sensors may be connected to a data acquisition system to record or alarm. In unattended stations, the sensors may be used with a relay to alarm, to initiate corrective action, or to trip the unit if preset temperatures limits are exceeded. For generators with conventional (or indirectly cooled) stator windings, RTDs embedded between the top and bottom bars are used to monitor winding temperatures. For generators with inner-cooled (or directly cooled) stator windings, the stator bar coolant discharge temperature is used along with the embedded RTDs to monitor the winding temperature. The generator manufacturer should be consulted for specific recommendations on the preferred method of monitoring these sensors and temperature limits to alarm and trip.

12.5.1.1.2 Overload protection

In some instances, generator overload protection can be provided through the use of a torque-controlled overcurrent relay that is coordinated with the ANSI C50.13-1989 short-time capability curve. This relay consists of an instantaneous overcurrent unit and a time-overcurrent unit having an extremely inverse characteristic. The instantaneous unit is set to pick up at 115% of full-load current and is used to torque control the time-overcurrent unit. The instantaneous unit dropout should be 95% or higher of pickup setting. The time-overcurrent unit is set to pick up at 75% to 100% of full-load current, and a time setting is chosen so that the relay operating time is 7 s at 226% of full-load current. With this approach, the relay is prevented from tripping for overloads below 115% of full-load current and yet provides tripping in a prescribed time for overloads above 115% of full-load current. An overload alarm may be desirable to give the operator an opportunity to reduce load in an

Copyright © 2001 IEEE. All rights reserved.

Copyright The Institute of Electrical and Electronics Engineers, Inc.
Provided by IHS under license with IEEE
No reproduction or networking permitted without license from IHS
Not for Resale

orderly manner. This device should not give nuisance alarms for external faults and should coordinate with the generator overload protection if this protection is provided.

For air-cooled generators that may operate in a wide range of ambient temperatures, it is necessary to coordinate the ANSI C50.13-1989 thermal capability and the relay setting with the increased capability of the turbine and the generator at reduced ambient temperature. Conversely, it may be difficult to protect the generator for its reduced capability when the ambient temperature is high.

12.5.1.2 Failure of cooling systems

Depending upon rating and design, the generator stator core and windings may be cooled by air, oil, hydrogen, or water. In directly cooled (or conductor-cooled) generators, the coolant is in direct contact with the heat-producing conductors of the stator winding. In indirectly cooled generators, the coolant cools the generator by relying on heat transfer through the insulation. For any type of generator, a failure of the cooling system can result in rapid deterioration of the stator core lamination insulation and/or stator winding conductors and insulation.

In general, the generator manufacturer provides all of the necessary protection for the cooling system. This protection is in the form of sensors, such as RTDs, thermocouples, and flow and pressure sensors. These devices are used to monitor the winding temperatures or the coolant temperature, flow, or pressure. They may be connected to alarm, to automatically reduce load to safe levels, or to trip.

For a particular machine, the generator manufacturer should be consulted to ascertain the temperature limits, the protection provided, and the recommended operating procedures for a loss of coolant.

12.5.1.3 Core hot spots

Localized hot spots in the stator core can be produced by lamination insulation failure caused by misoperation (e.g., excessive leading power factor operation, overfluxing), by vibration due to looseness (e.g., wear of insulation, fatigue of laminations), by foreign objects left in the machine, by damage to the core during installation or maintenance, or by objects that are normally a part of the machine (e.g., a nut, a wedge), but become detached from their normal position and move to the core.

The hot spots are the result of high eddy currents, produced from core flux, that find conducting paths across the insulation between laminations. In some designs, stator laminations are electrically shorted together on the outer diameter of the core where it attaches to the stator frame. Any contact between laminations on the inner bore results in a circuit for eddy currents. The shorting of laminations can cause melting of core steel that can be costly to repair.

The only means for detecting hot spots in air-cooled generators is through the use of RTDs and/or thermocouples imbedded in strategic locations. Because covering the entire core and

 Copyright © 2001 IEEE. All rights reserved.

Copyright The Institute of Electrical and Electronics Engineers, Inc.
Provided by IHS under license with IEEE
No reproduction or networking permitted without license from IHS Not for Resale

windings with these detectors is not possible or practical, this approach can provide only partial detection of hot spots.

12.5.2 Field thermal protection

Thermal protection for the generator field may be divided into two categories:

— Protection for the main field winding circuit
— Protection for the main rotor body, wedges, retaining ring, and amortisseur winding

12.5.2.1 Field winding protection

The field winding can operate continuously at a current equal to or less than the current required to produce rated kilovoltamperes at rated power factor and voltage. For power factors less than rated, the generator output should be reduced to keep the field current within these limits. The capability curves as defined in IEEE Std 67-1990 are determined on this basis.

Under abnormal conditions, such as short circuits and other system disturbances, it is permissible to exceed these limits for a short time as specified in ANSI C50.13-1989. In ANSI C50.13-1989, the field winding short-time thermal capability is given in terms of permissible field voltage as a function of time as noted below:

Time (s)	10	30	60	120
Field voltage (%)	208	146	125	112

Protection schemes can utilize this characteristic to prevent thermal damage to the field winding circuit.

Because putting temperature sensors directly in the field windings is not practical, only indirect monitoring of the field winding temperature is normally possible. For excitation systems employing main field collector rings, the average temperature of the field winding can be approximated by calculating the field resistance using simultaneous field current and voltage readings. This resistance, in conjunction with the known cold resistance, is a measure of the operating temperature. This method, described in IEEE Std 67-1990, gives only an indication of the average temperature throughout the field winding and not the more important hot-spot temperature. This method is not applicable with brushless excitation systems where the actual main field current and voltage are not available for measurement.

12.5.2.2 Field overexcitation protection

Overexcitation protection for the field winding is generally provided utilizing the generator field short-time capability characteristic. Several different schemes are available using relays or excitation system control elements, or both.

Copyright © 2001 IEEE. All rights reserved.

Copyright The Institute of Electrical and Electronics Engineers, Inc.
Provided by IHS under license with IEEE
No reproduction or networking permitted without license from IHS
Not for Resale

12.5.2.2.1 Fixed time-delay relaying scheme

The fixed time-delay relay scheme is the simplest form of field protection, and it utilizes a contact-making milliammeter or voltmeter connected either in the main field circuit or in the field of the ac exciter. This device is set to pick up when the field current exceeds its rated full-load value. When an overexcitation condition occurs, the device picks up and performs the following functions:

a) Sounds an alarm.
b) Adjusts field excitation to a preselected value corresponding to rated full-load level or less.
c) After a fixed time delay, trips the generator regulator or transfers to an alternate control.
d) If overexcitation is not eliminated after some additional short time interval, trips the unit.

This scheme protects the field for overexcitation conditions during system disturbances and for the rare occurrence of a faulty excitation system component. While simple in form, this scheme has the disadvantage that it overprotects the machine because the fixed time-delay relay must be set for the maximum possible overexcitation condition that can occur. In other words, for less severe overexcitation conditions, tripping occurs at shorter times than required. Therefore, full advantage of the inverse-time thermal capability of the field winding characteristic cannot be obtained.

12.5.2.2.2 Inverse time-delay relay scheme

The inverse time-delay relay scheme utilizes a voltage relay whose characteristic approximately matches the inverse-time characteristic of generator field. This relay may be connected at the terminals of an ac exciter alternator, in the main generator field, or in the field of the ac exciter. When connected to a field circuit, a transducer is used to convert the dc signal to an ac quantity. The relay is normally set so that a margin of 5% to 10% exists between the relay characteristic and the field capability curve.

This relay, in conjunction with one or more timers, performs the same functions as the scheme in 12.5.2.2.1. For an overexcitation condition, the device performs the following functions:

a) Sounds an alarm.
b) Adjusts the field excitation to a preselected value corresponding to rated full-load level or less.
c) After some delay, trips the generator regulator or transfers to an alternate control.
d) If overexcitation is not eliminated, trips the unit.

This scheme provides protection for overexcitation conditions and for possible excitation system failures.

 Copyright © 2001 IEEE. All rights reserved.

Copyright The Institute of Electrical and Electronics Engineers, Inc.
Provided by IHS under license with IEEE
No reproduction or networking permitted without license from IHS Not for Resale

12.5.2.2.3 Voltage regulator system

Modern excitation systems usually incorporate the field protective functions and the regulating function. These systems may have built-in circuitry that duplicates the fixed-time and/or the inverse-time relaying function. When an overexcitation condition occurs and field current exceeds a safe value for a specified period, these protective functions reduce field current to the full-load value or to some other predetermined level. On some excitation systems, if the overexcitation condition persists after an attempt to reduce field current is made, the protective function trips the regulator or transfers to an alternate exciter after a short period. If this step does not eliminate the problem, the generator may be tripped. In this type of excitation system, the protective function is separate from the excitation function and, therefore, can provide protection when failures occur in the regulating systems or when the regulator is not in the control circuit.

If the protective function is part of the regulating system, the protection would be eliminated when the regulator is tripped or is out of service. For this type of system, supplementary or backup relay protection as described in the preceding can be provided.

12.5.2.3 Rotor body

No simple methods exist for direct thermal protection of the rotor. Various indirect methods are used either to approximate rotor temperatures or to act directly on the quantities that would lead to excessive rotor temperatures. Protection schemes for the rotor are, therefore, directed at the potential causes of thermal distress. For example, negative-sequence currents in the stator, loss of excitation, loss of synchronism, induction motoring, or inadvertent energization can cause excessive rotor temperatures due to circulating currents in various paths of the rotor body.

12.5.3 Generator stator fault protection

12.5.3.1 General consideration

Generator faults are always considered to be serious because they can cause severe and costly damage to insulation, windings, and the core. They can also produce severe mechanical torsional shock to shafts and couplings. Moreover, fault currents in a generator do not cease to flow when the generator is tripped from the system and the field disconnected. Fault current can continue to flow for many seconds because of trapped flux within the machine and thereby increase the amount of fault damage.

As a consequence, for faults in or near the generator that produce high magnitudes of short-circuit currents, some form of high-speed protection is normally used to trip and shut down the machine as quickly as possible in order to minimize damage. Where external impedances are used to limit fault currents to a few amperes, slower forms of protection may be justified. In certain cases, it may be justified to consider the use of rapid de-excitation methods, which produce a faster decay of fault currents.

Copyright © 2001 IEEE. All rights reserved.

Copyright The Institute of Electrical and Electronics Engineers, Inc.
Provided by IHS under license with IEEE
No reproduction or networking permitted without license from IHS
Not for Resale

12.5.3.2 Phase-fault protection

Some form of high-speed differential relaying is generally used for phase-fault protection of generator stator windings. Differential relaying detects three-phase faults, phase-to-phase faults, double phase-to-ground faults, and some single phase-to-ground faults depending upon how the generator is grounded. Because the fault current is proportional to the voltage at the point of the fault, the closer to the neutral of the generator winding, the less the voltage and resultant fault current. Therefore, some forms of differential protection can only detect faults to within 5% to 10% of the generator neutral. For faults within the 5% to 10% of the neutral winding end, other forms of protection should be used as discussed in 12.5.3.2.1 through 12.5.3.2.3 and illustrated in Figure 12-16.

Differential relaying does not detect turn-to-turn faults in the same phase because no difference exists in the current entering and leaving the phase winding. Where applicable, separate turn fault protection can be provided with the split-phase relaying scheme. After the detection of these faults, the generator is quickly removed from service to limit the extent of damage. For a further discussion on the basic principles of differential protection, see Chapter 4 on protective relays.

Percentage differential relays connected, as shown in Figure 12-10, are normally used for protection of larger generators. Fixed-percentage differential relays have constant slope characteristics of 10% to 50%, depending on manufacturer, for all fault-current values. Variable-percentage differential relays make the scheme more tolerant of CT mismatch and reduce the relay's sensitivity to external faults. Induction disk, induction cup, or static relays are commercially available for use in percentage differential protection schemes. The operating time of standard speed induction disk relays is a minimum of 6 cycles, and high-speed induction cup or static relays operate in 1.2 cycles to 1.5 cycles.

Normally, when a percentage differential scheme is used, the CTs should be located so that they include the generator breaker within the protective zone. This configuration gives maximum protection to the circuit breaker and bus duct or cable connecting the generator to the power system.

12.5.3.2.1 Variable slope percentage differential relay

The variable slope percentage differential relay is the most widely used form of differential relaying for generator protection. In this type of relay, the percentage slope characteristic can vary from about 5% at low values of through current up to 50% or more at high values of through current as illustrated in Figure 12-11. This characteristic results in a relay that is sensitive to internal faults and insensitive to CT error currents during severe external faults.

CTs should have a primary current rating equal to or larger than the generator rated current, preferably at least 150%; and they should also have closely matched performance characteristics to prevent false operation on faults outside the differential protection zone. It is preferable to avoid connecting other relays or devices in these current circuits.

Copyright © 2001 IEEE. All rights reserved.

Copyright The Institute of Electrical and Electronics Engineers, Inc.
Provided by IHS under license with IEEE
No reproduction or networking permitted without license from IHS Not for Resale

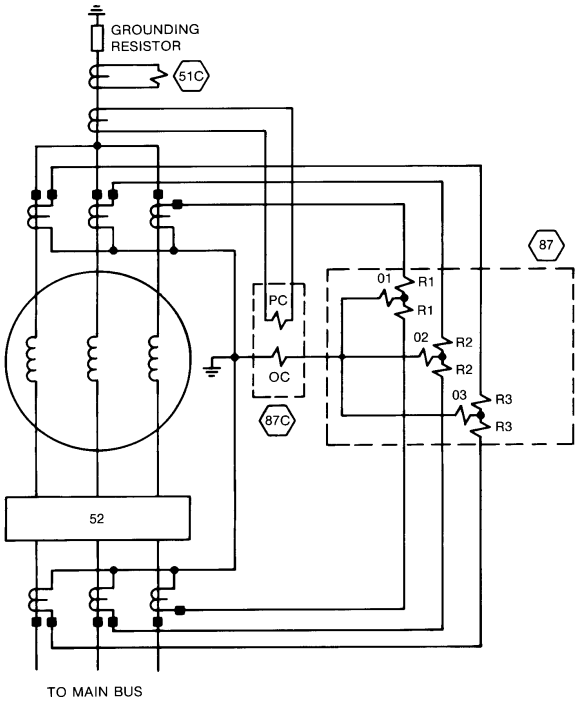

Figure 12-10—Generator percentage differential relay (phase scheme) and ground differential scheme using a directional relay

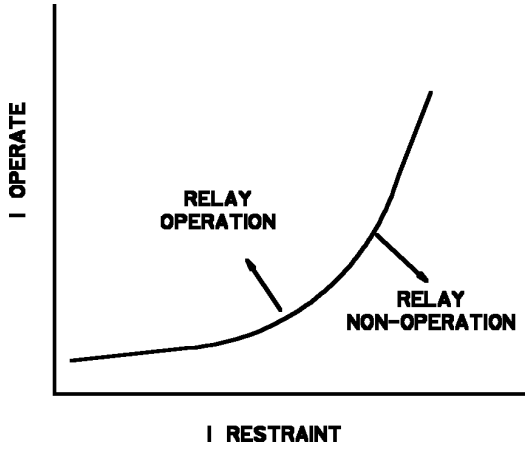

Figure 12-11—Variable slope differential relay

Copyright © 2001 IEEE. All rights reserved.

Copyright The Institute of Electrical and Electronics Engineers, Inc.
Provided by IHS under license with IEEE
No reproduction or networking permitted without license from IHS
Not for Resale

Figure 12-12 illustrates the differential connections for a six-bushing machine having single-turn coils and one or more circuits per phase. This machine is the most widely used configuration.

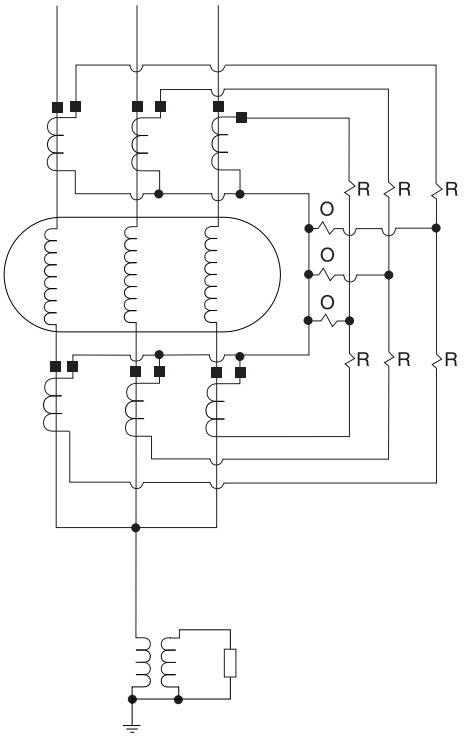

Figure 12-12—Percentage differential relay connection for six-bushing wye-connected generator

Figure 12-13 shows the typical differential relaying arrangement used for a delta-connected generator.

12.5.3.2.2 Self-balancing differential scheme

The self-balancing differential scheme has been used for phase and ground faults on small generators with low-resistance neutral grounding. This scheme is illustrated in Figure 12-14. As shown, leads from both ends of the phase winding are placed in the opening of a window CT. Any difference between the currents entering and leaving the winding is detected by an instantaneous overcurrent relay. Where applicable, this scheme is capable of providing sensitive phase- and ground-fault protection.

Because these CTs see a difference current that is typically zero under normal system conditions, they commonly are not rated for load currents. Low-ratio CTs are typically used in this application for greater sensitivity. These low-ratio CTs usually have a lower ANSI CT accuracy designation, which results in a greater tendency to saturate than the load-rated CTs. These CTs may saturate even on low-level faults, and sensitivity may be lost. For this reason,

Copyright © 2001 IEEE. All rights reserved.

Copyright The Institute of Electrical and Electronics Engineers, Inc.
Provided by IHS under license with IEEE
No reproduction or networking permitted without license from IHS
Not for Resale

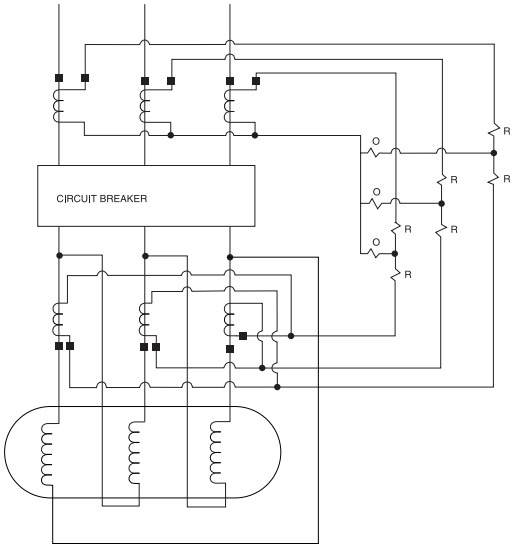

Figure 12-13—Percentage differential relay connection for delta-connected generator

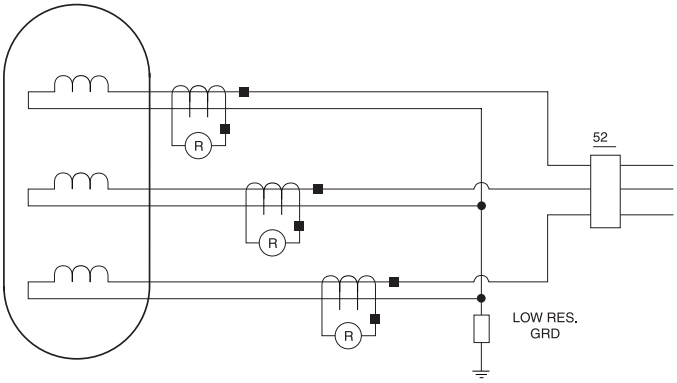

Figure 12-14—Self-balancing protection scheme

care should be taken when selecting relays for use in this application. Furthermore, when exposed to high fault levels, the CT core may become saturated to the extent that the CT cannot produce the necessary secondary current to operate the relay. Because both ends of the generator windings must be passed through the opening in the CT, this scheme is normally employed only on generators where the flexibility of the conductors permits this connection. CTs are usually mounted in the generator terminal box. Thus generator cables are excluded from the protective zone of the scheme. Because the relays are also insensitive to the generator-load current, the instantaneous overcurrent relay may be set at pickup levels as sensitive as 5 primary A to 10 primary A.

Copyright © 2001 IEEE. All rights reserved.

Copyright The Institute of Electrical and Electronics Engineers, Inc.
Provided by IHS under license with IEEE
No reproduction or networking permitted without license from IHS
Not for Resale

12.5.3.2.3 Differential backup protection

The type and sophistication of backup protection provided is dependent to some degree upon the size of the generator and on the method of connecting the generator to the system.

When a generator is connected to the system in the unit generator-transformer configuration, high-speed phase-fault backup protection can be obtained by extending the protective zone of the unit transformer differential relay scheme to include the generator, the interconnecting leads, and the unit auxiliary transformer. This backup is often referred to as the overall differential scheme and is illustrated in Figure 12-15.

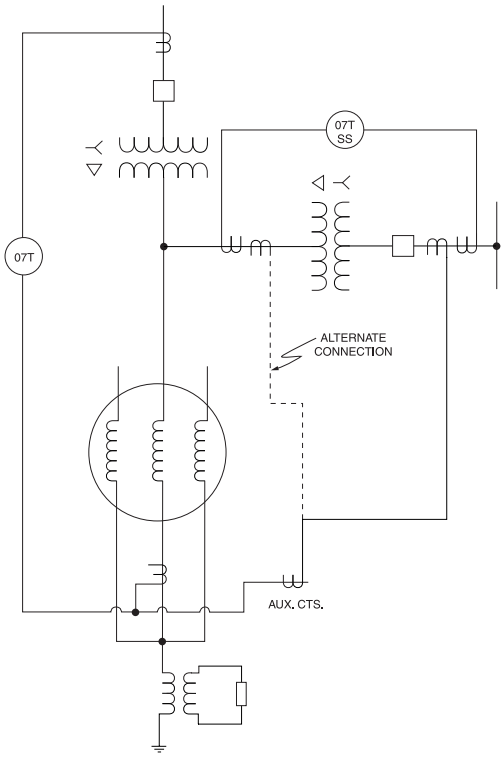

Figure 12-15—Overall differential scheme of generator phase-fault backup protection

In this arrangement, the CTs in the unit auxiliary transformer circuit should be high-ratio CTs in order to balance the differential circuit. The required ratio may be obtained with a single-bushing CT or with a combination of bushing and auxiliary CTs as shown in Figure 12-15.

In some cases, the unit auxiliary transformer may be excluded from the overall differential scheme as indicated by the alternate connection. This approach may introduce a blind spot in the protection for the unit auxiliary transformer. For faults near the high side of this transformer, the available fault current may be 150 to 200 times the rating of the CTs used in the differential scheme for the unit auxiliary transformer. This high current level would drive the

Copyright © 2001 IEEE. All rights reserved.

Copyright The Institute of Electrical and Electronics Engineers, Inc.
Provided by IHS under license with IEEE
No reproduction or networking permitted without license from IHS
Not for Resale

CTs into saturation and result in little or no current output to the differential relays. This blind spot is eliminated by connecting the overall differential scheme to the low side of the unit auxiliary transformer. The overall scheme detects the severe faults, while the unit auxiliary differential detects the low-level faults.

Where generators are bussed at generator voltage as shown in Figure 12-1 and Figure 12-2, the overall differential scheme is not applicable. Furthermore, a duplicate differential scheme is rarely used to provide phase-fault backup protection. In these configurations, a common practice is to use the unbalanced current protection (or negative-sequence current relay) and system backup protection to provide backup for all generator phase faults. This protection is discussed in detail in 12.5.5.9. This backup relaying is generally less sensitive than differential relaying and has time delay associated with it. Backup protection is provided by distance relay (Device 21) or by voltage-restrained or -controlled time-overcurrent relay (Device 51V).

12.5.3.2.4 Tripping

A common practice is to have the primary and backup protection energize separate hand-reset, multicontact auxiliary relays. These auxiliary relays simultaneously initiate the following:

a) Trip the main generator breakers.
b) Trip the field and/or exciter breakers.
c) Trip the prime mover.
d) Turn on carbon dioxide internal generator fire protection, if provided.
e) Operate an alarm and/or annunciator.
f) Transfer the station service to the standby source.

12.5.3.3 Ground-fault protection

Protective schemes that are designed to detect three-phase and phase-to-phase stator faults are not intended to provide protection for phase-to-ground faults in the generator zone. The degree of ground-fault protection provided by these schemes is directly related to how the generator is grounded and, therefore, to the magnitude of the available ground-fault current. The maximum phase-to-ground fault current available at the generator terminals may vary from three-phase fault-current levels or higher to almost zero. In addition, the magnitude of stator ground-fault current decreases almost linearly as the fault location moves from the stator terminals toward the generator neutral due to the generator winding impedance. For a ground fault near the neutral of a wye-connected generator, the available phase-to-ground fault current becomes small regardless of the grounding method.

As noted in 12.5.3.2, differential relaying provides no ground-fault protection on high-impedance-grounded machines where primary fault current levels are limited to 3 A to 25 A. Differential relaying schemes may detect some stator phase-to-ground faults depending upon how the generator is grounded. Figure 12-16 illustrates the approximate relationship between available ground-fault current and the percent of the stator winding protected by a current-

Copyright © 2001 IEEE. All rights reserved.

Copyright The Institute of Electrical and Electronics Engineers, Inc.
Provided by IHS under license with IEEE
No reproduction or networking permitted without license from IHS
Not for Resale

differential scheme. When the ground-fault current level is limited below generator-rated load current, a large portion of the generator may be unprotected.

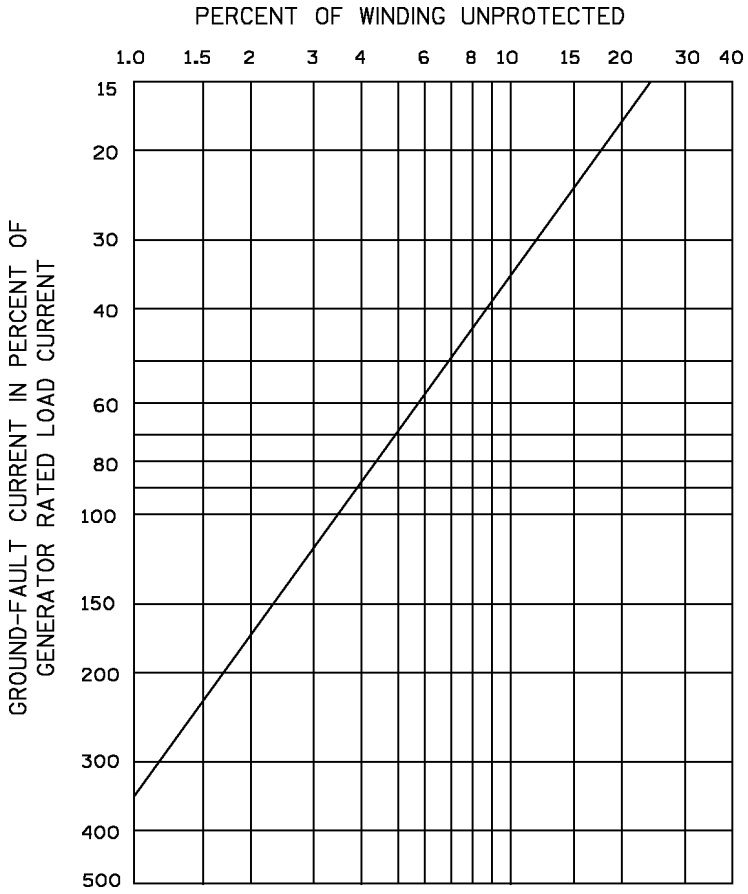

Figure 12-16—Percent of stator winding unprotected by differential relay for phase-to-ground fault

Because the available ground-fault current may be small or limited to low values, a common practice is to provide separate sensitive ground-fault protection for generators. Depending on the generator-grounding method, the protection provided may include both primary and backup relaying or may be used to supplement whatever protection may be provided by differential relaying.

Numerous schemes have been developed and used to provide sensitive ground-fault protection for generators and are discussed in considerable detail in IEEE Std C37.101-1993. Only the most widely used schemes for the four grounding methods considered in 12.4 are discussed in 12.5.3.3.1 through 12.5.3.3.4.

Copyright © 2001 IEEE. All rights reserved.

Copyright The Institute of Electrical and Electronics Engineers, Inc.
Provided by IHS under license with IEEE
No reproduction or networking permitted without license from IHS
Not for Resale

12.5.3.3.1 High-resistance grounding

The ground-fault current is limited to such low levels that differential relaying does not detect phase-to-ground faults. Therefore, for high-resistance-grounded generators, a common practice is to provide separate primary and backup relaying for ground-fault protection.

12.5.3.3.1.1 Protection

The most widely used protective scheme with the resistance-loaded distribution transformer method of grounding is a time-delay overvoltage relay (Device 59GN) connected across the grounding impedance to sense zero-sequence voltage as shown in Figure 12-17.

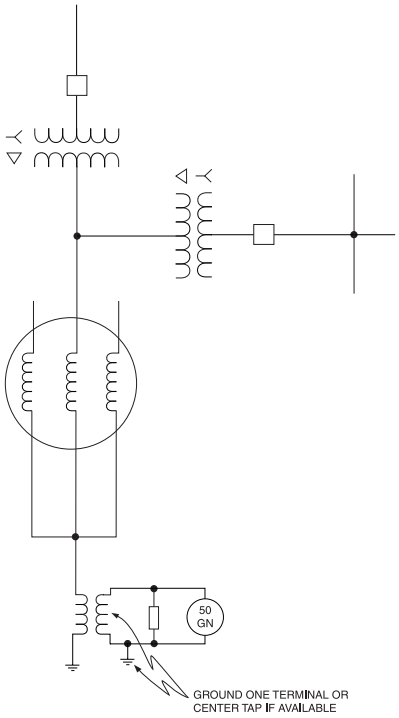

Figure 12-17—Generator ground-fault protection for high-impedance-grounded generator

The relay used for this function is designed to be sensitive to fundamental frequency voltage and insensitive to third-harmonic and other zero-sequence harmonic voltages that may be present at the generator neutral.

Because the grounding impedance is large compared to the generator impedance and other impedances in the circuit, the full phase-to-neutral voltage is impressed across the grounding device for a phase-to-ground fault at the generator terminals. The voltage on the relay is a function of the distribution transformer ratio and the location of the fault. The voltage is a

Copyright © 2001 IEEE. All rights reserved.

Copyright The Institute of Electrical and Electronics Engineers, Inc.
Provided by IHS under license with IEEE
No reproduction or networking permitted without license from IHS
Not for Resale

maximum for a terminal fault and decreases in magnitude as the fault location moves from the generator terminals toward the neutral.

Typically, the overvoltage relay has a minimum pickup setting of approximately 5 V. With this setting and with typical distribution transformer ratios, this scheme is capable of detecting faults to within 2% to 5% of the stator neutral.

For personnel safety, the distribution transformer secondary winding is usually grounded at one point, as shown in Figure 12-17. This point may be at one terminal of the secondary winding or at a center tap, if available.

The time setting for the voltage relay is selected to provide coordination with other system protective devices. Specific areas of concern include the following:

a) When grounded-wye-grounded-wye VTs are connected at the machine terminals, the voltage relay should be time-coordinated with VT fuses for faults on the transformer secondary windings. If relay time delay for coordination is not acceptable, the coordination problem can be alleviated by grounding one of the secondary phase conductors instead of the secondary neutral. When this technique is used, the coordination problem still exists for ground faults on the secondary neutral. Thus, its usefulness is limited to applications where the exposure to ground faults on the secondary neutral is small.

b) The voltage relay may have to be coordinated with system relaying for system ground faults. System phase-to-ground faults induce zero-sequence voltages at the generator due to capacitive coupling between the windings of the unit transformer. This induced voltage appears on the secondary of the grounding distribution transformer and may cause operation of the zero-sequence voltage relay.

In general, a maximum time-delay setting for the induction disk relay has been found to provide adequate coordination with VT fuses and system ground relaying. Shorter time delays have been used where the VT secondary neutral is isolated and a secondary phase conductor grounded and where high-speed ground relaying is used on the high-voltage system.

Several schemes use third-harmonic voltage at the neutral or at the generator terminals to detect faults near the stator neutral. These schemes supplement the fundamental frequency zero-sequence voltage relay. These schemes assume that adequate harmonic voltage is present at the neutral of the machine. Typical values needed are approximately 1% of rated voltage.

In Figure 12-18, a voltage relay is connected to measure the third-harmonic voltage at the machine terminals. When a stator phase-to-ground fault occurs, third-harmonic voltage increases, and the increase causes relay operation.

 Copyright © 2001 IEEE. All rights reserved.

Copyright The Institute of Electrical and Electronics Engineers, Inc.
Provided by IHS under license with IEEE
No reproduction or networking permitted without license from IHS Not for Resale

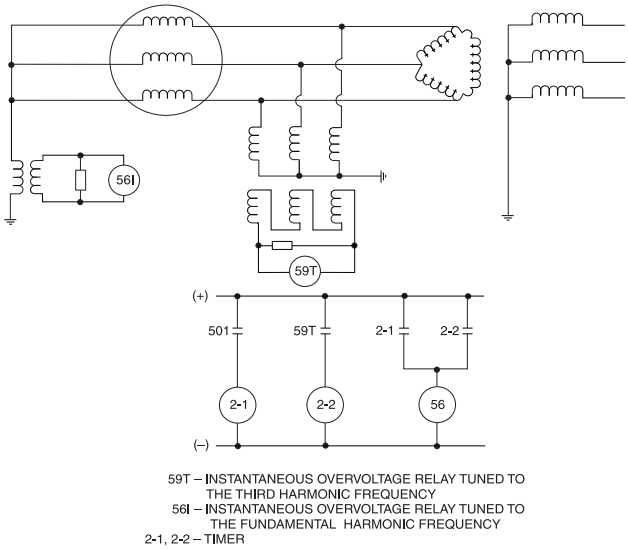

Figure 12-18—Third-harmonic overvoltage scheme for generator ground-fault protection

12.5.3.3.1.2 Tripping

In general, both the primary and backup protection are connected to trip and to shut down the generator and the prime mover. Separate lockout relays may be used to distinguish phase faults from ground faults and/or to distinguish primary from backup relay operation.

12.5.3.3.2 Low-resistance grounding

As indicated in 12.4.2, the grounding resistor is selected to limit the generator's contribution to a single phase-to-ground fault at its terminals to a range of current between 200 A and 400 A. With this range of available fault current, differential relaying provides some ground-fault protection (see Figure 12-16). However, because the differential relaying does not provide ground-fault protection for the entire stator phase winding, a common practice is to provide supplementary sensitive protection for ground faults.

Low-resistance grounding is generally used where two or more generators are used at generator voltage and connected to a system through one step-up transformer as illustrated in Figure 12-2 or connected directly to a distribution system as illustrated in Figure 12-1. The protection discussed above permits selective ground relaying of several generators.

When the generator neutral is grounded through an impedance limiting the maximum ground-fault current to a value less than the primary rating of the CTs, a differential ground-fault scheme (Device 87G) should be considered. A differential ground-fault scheme, however, is capable of detecting faults to within 10% from the generator neutral. A current-polarized directional ground relay, shown in Figure 12-10, may be used in this application. A neutral CT, separate from the ground overcurrent relay CT, may be necessary for maximum

Copyright © 2001 IEEE. All rights reserved.

Copyright The Institute of Electrical and Electronics Engineers, Inc.
Provided by IHS under license with IEEE
No reproduction or networking permitted without license from IHS
Not for Resale

relay sensitivity. The ground differential CT should have a primary current rating of 10% to 50% of the neutral resistor-current rating. To match the phase and neutral CT ratios, an auxiliary CT should be utilized. Again, a careful review of the auxiliary CT performance characteristics should be made to prevent misoperation on external faults.

12.5.3.3.2.1 Protection

Sensitive ground-fault protection can be provided with a product relay, current-polarized directional ground relay, or with a simple time-overcurrent relay. These three schemes provide varying degrees of sensitivity for detecting ground faults covered by the differential zone.

— The product relay is connected to receive differential current from the phase CTs in the relay's operating coil circuit and generator neutral $3I_o$ current in its polarizing circuit as shown in Figure 12-19. Differential comparison is biased via an auxiliary CT to assure that positive restraint exists for external faults even though the phase and neutral CTs have substantially different performance characteristics. This scheme provides excellent security against misoperation for external faults and provides sensitive detection for internal faults.

— When a directional overcurrent relay is used, the polarizing coil is energized from a CT in the generator neutral, and the operating coil is in the neutral of the generator differential relaying scheme, as shown in Figure 12-10. This application provides sensitivity without a high operating coil burden.

— When a simple overcurrent relay is used, a sensitively set time-overcurrent relay is connected in the neutral of the differential scheme, as shown in Figure 12-20.

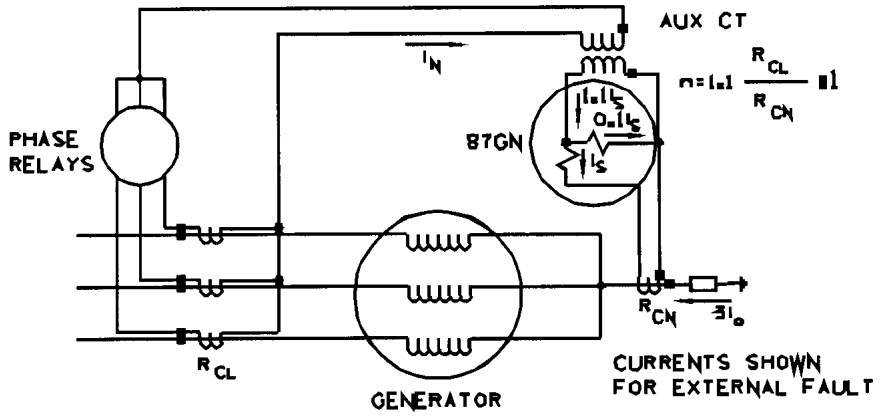

Figure 12-19—Generator ground differential protection using product relay

In these approaches, the sensitive ground protection detects only faults covered by the differential zone and eliminates the need to time-coordinate these relays with other system

Copyright © 2001 IEEE. All rights reserved.

Copyright The Institute of Electrical and Electronics Engineers, Inc.
Provided by IHS under license with IEEE
No reproduction or networking permitted without license from IHS
Not for Resale

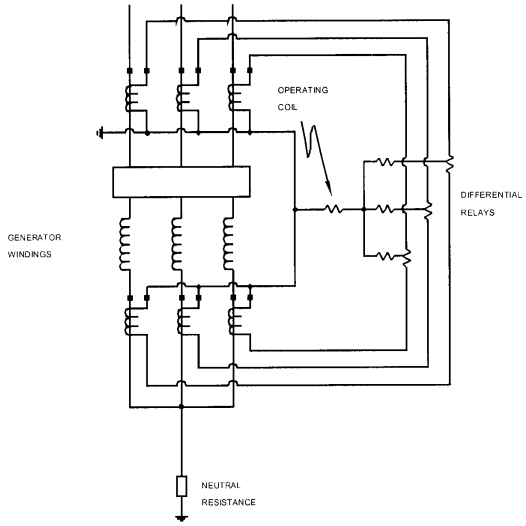

Figure 12-20—Generator ground differential protection using overcurrent relays

relaying. The effect of the ground relay coil burden in the neutral of the generator differential relaying should be checked.

In addition to this protection, a common practice is to install a sensitive ground time-overcurrent relay in the generator neutral. This relay provides backup protection for all ground relays in the system at the generator-voltage level. It also provides protection against internal generator ground faults, but this protection is limited by the amount of time delay that the relay must have to coordinate with other ground relays. On small isolated machines, this device and Device 51V (when the CTs for it are installed on the neutral side) provide the only protection for internal generator faults.

The neutral-CT-turns ratio and tap setting of the overcurrent relay should be selected to provide an operating current of 5 to 10 times its pickup setting for a bolted line-to-ground fault at the generator line terminals. The pickup setting should be at least equal to and preferably greater than the pickup setting of downstream ground overcurrent devices for selectivity between those relays. The pickup setting should also be set above the anticipated level of any harmonic current flowing in the neutral during normal conditions. Many European generator designs have a winding configuration that produces a higher magnitude of harmonic currents than domestic machines, sufficient to preclude the use of machine neutral grounding. In these cases, the use of a zigzag grounding transformer should be considered to establish the source grounding point.

12.5.3.3.2.2 Tripping

The tripping mode is the same as for high-resistance grounding (see 12.5.3.3.1.2).

Copyright © 2001 IEEE. All rights reserved.

Copyright The Institute of Electrical and Electronics Engineers, Inc.
Provided by IHS under license with IEEE
No reproduction or networking permitted without license from IHS
Not for Resale

12.5.3.3.3 Reactance grounding

12.5.3.3.3.1 Protection

Reactance grounding is used where the generator is connected directly to an effectively grounded distribution system. With reactance grounding, the available ground-fault current levels range from 25% to 100% of the three-phase fault current. With this high level of fault current, differential relaying is capable of providing almost complete protection of the stator phase winding for most ground faults. However, differential relaying may not detect high-resistance faults or faults near the generator neutral. Therefore, a common practice is to provide additional sensitive ground protection as backup for generator and system ground faults.

Backup protection is generally provided by a time-overcurrent relay connected to a CT in the generator neutral. The pickup of this relay should be set above the normal currents that flow in the neutral due to the unbalanced system loads and zero-sequence harmonic currents. Because this overcurrent relay operates for system ground faults, it should be time-coordinated with system ground relaying.

More sensitive ground-fault protection may be provided with the directional overcurrent relay or with the simple overcurrent relay connected in the neutral of the differential scheme, as described in 12.5.3.3.2.1.

12.5.3.3.3.2 Tripping

The tripping mode is the same as for high-resistance grounding (see 12.5.3.2.4).

12.5.3.3.4 Grounding-transformer grounding

12.5.3.3.4.1 Protection

As discussed in 12.4.4, grounding may be provided by a zigzag transformer, or a grounded wye-delta transformer or by a grounded wye-broken delta transformer with a resistor connected across a corner of the broken delta.

When a zigzag or grounded wye-delta transformer is used, the effective grounding impedance is selected to provide sufficient current for selective ground relaying. The available ground-fault current is generally on the order of 400 A. These types of grounding transformers are generally used as an alternate grounding source when a generator with neutral reactance grounding is connected directly to a distribution system or as a bus grounding source where several ungrounded wye- or delta-connected generators are bussed at generator voltage. A typical application is illustrated in Figure 12-21. In this arrangement, the generators are ungrounded, and the grounding bank is the sole source of ground-fault current for faults in the generators or on the feeders.

Copyright © 2001 IEEE. All rights reserved.

Copyright The Institute of Electrical and Electronics Engineers, Inc.
Provided by IHS under license with IEEE
No reproduction or networking permitted without license from IHS Not for Resale

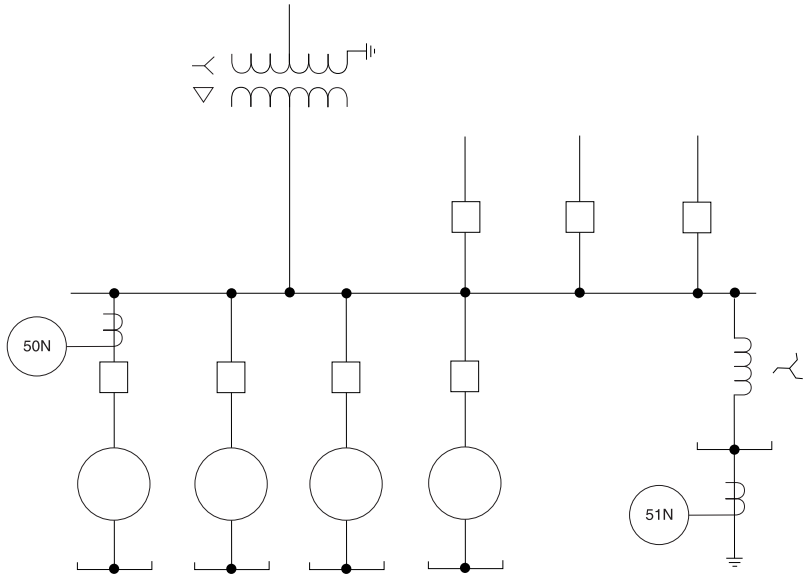

Figure 12-21—Ground-fault protection with zigzag grounding bank

Each generator and feeder breaker would have primary ground overcurrent relaying. This protection could be sensitive instantaneous overcurrent relaying. Backup protection would be provided by a time-overcurrent relay connected to a CT in the neutral of the grounding bank.

The grounded wye-broken-delta transformer with a resistance in the corner of the broken delta is generally a high-resistance-grounded system that limits the single phase-to-ground fault current to a range of 3 primary A to 25 primary A. This approach is generally used to provide a means for detecting ground faults in ungrounded generators prior to synchronizing the generator to the system or to provide backup for high-impedance-grounded generators. In the application, the grounding transformer would be connected at the terminals of the generator and a zero-sequence overvoltage relay of the type described in 12.5.3.3.1.1 would be connected across the resistance in the broken delta. The relay pickup setting and coordination would be as discussed in 12.5.3.3.1.1.

12.5.3.3.4.2 Tripping

The tripping mode is the same as for high-resistance grounding (see 12.5.3.2.4).

12.5.4 Generator rotor field protection

This subclause is primarily concerned with the detection of ground faults in the field circuit. Other protection for the field circuits is covered in 12.5.5.1.

Generator field circuits are normally operated ungrounded. Thus, a single ground fault does not result in equipment damage or affect the operation of the generator. If, however, a second ground fault should occur, an unbalance in the magnetic field is established by the rotor. This

Copyright © 2001 IEEE. All rights reserved.

Copyright The Institute of Electrical and Electronics Engineers, Inc.
Provided by IHS under license with IEEE
No reproduction or networking permitted without license from IHS
Not for Resale

unbalance may be severe enough to develop destructive vibration within the generator. The field circuit of a generator is an ungrounded system. As such, a single ground fault does not generally affect the operation of a generator. However, if a second ground fault occurs, a portion of the field winding is short circuited and produces unbalanced air-gap fluxes in the machine. These unbalanced fluxes may cause rotor vibration that can quickly damage the machine; also, unbalanced temperatures caused by unbalanced currents can cause similar damaging vibrations. The probability of the second ground occurring is greater than the first because the first ground establishes a ground reference for voltages induced in the field by stator transients and increases the stress to ground at other points on the field winding.

12.5.4.1 Protection

Several methods are in common use for detecting rotor field ground faults. For excitation systems using slip rings and brushes, two types of relays are available. Satisfactory operation of either type of relay requires the generator rotor to be grounded. To accomplish this setup, a means should be provided to bypass the bearing oil film. This step should be done because the resistance of the path may be too large for dependable relay operation and because even a small magnitude of current flowing through the bearing may cause its destruction. Bearing seals may be used to provide the necessary bypass in some machines, while others may require an additional brush and slip ring for effective rotor grounding.

In one method, a dc voltage is applied between the negative side of the generator field circuit and ground through the coil of an overvoltage relay, as illustrated in Figure 12-22. A ground anywhere in the field causes the relay to operate. A brush or braid is used to ground the rotor shaft because the bearing oil film may insert enough resistance in the circuit so that the relay would not operate for a field ground. Some time delay is normally used with this relay in order to prevent unnecessary operations for momentary or transitory unbalances of the field circuit with respect to ground. These momentary unbalances may be caused by the operation of fast-response thyristor excitation systems.

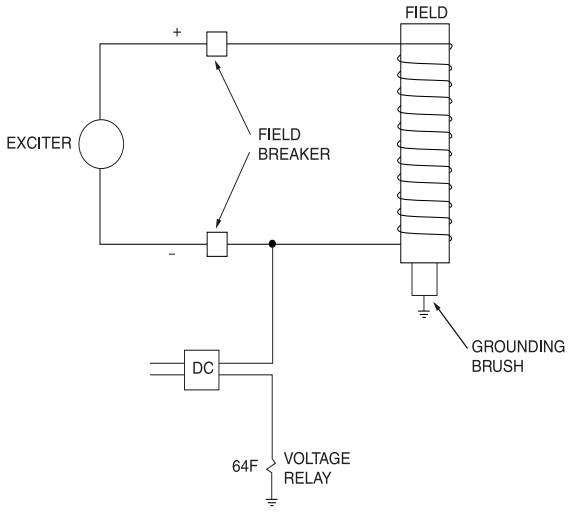

Figure 12-22—Field ground-fault protection using a dc source

Copyright © 2001 IEEE. All rights reserved.

Copyright The Institute of Electrical and Electronics Engineers, Inc.
Provided by IHS under license with IEEE
No reproduction or networking permitted without license from IHS
Not for Resale

The second method, illustrated in Figure 12-23, is similar to the method employed to detect a control battery ground and uses a voltage divider and a sensitive overvoltage relay between the divider midpoint and ground. As with the battery ground detector, a maximum voltage is impressed on the relay by a ground on either the positive or the negative battery leads. However, a null point exists between positive and negative where a ground fault does not produce a voltage across the relay unless the polarity on the ground detector is reversed from time to time. The generator field ground relay is designed to overcome the null problem by using a nonlinear resistor in series with one of the two linear resistors in the voltage divider. The resistance of the nonlinear resistance varies with the applied voltage. The divider is proportioned so that the field winding null point is at the winding midpoint when the exciter voltage is at rated voltage. Changes in exciter voltage move the null point from the field winding center.

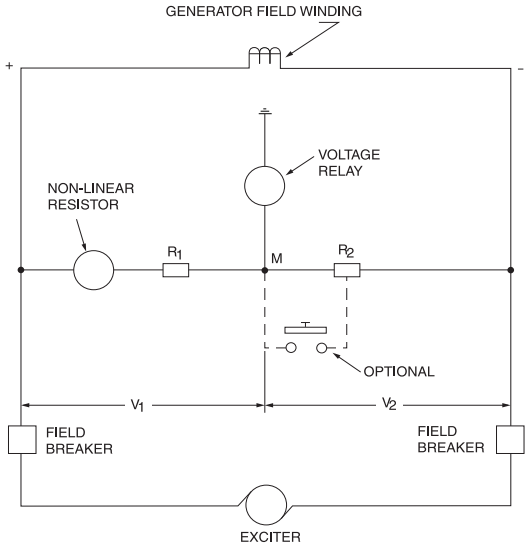

Figure 12-23—Field ground-fault protection using a voltage divider

On a brushless excitation system, continuous monitoring for field ground faults is not possible with conventional field ground relays because the generator field connections are contained in the rotating element.

Figure 12-24 illustrates the addition of a pilot brush or brushes to gain access to the rotating field parts. Normally, this addition is not made because eliminating the brushes is considered an advantage of the brushless system. However, detection systems can be used to detect field grounds if a collector ring is provided on the rotating shaft along with a pilot brush that can be periodically dropped to monitor the system. The ground check can be done automatically by a sequencing timer and control or by the operator. The brushes used in this scheme are not suitable for continuous contact with the collector rings. The field circuit impedance to ground is one leg of a Wheatstone bridge via the brush. A ground fault shorts out the field winding to rotor capacitance C_R, which unbalances the bridge circuit. If a voltage is read between ground and the brush, which is connected to one side of the generator field, then a ground

Copyright © 2001 IEEE. All rights reserved.

Copyright The Institute of Electrical and Electronics Engineers, Inc.
Provided by IHS under license with IEEE
No reproduction or networking permitted without license from IHS
Not for Resale

fault exists. For brushless machines, resistance measurements can be used to evaluate the integrity of the field winding.

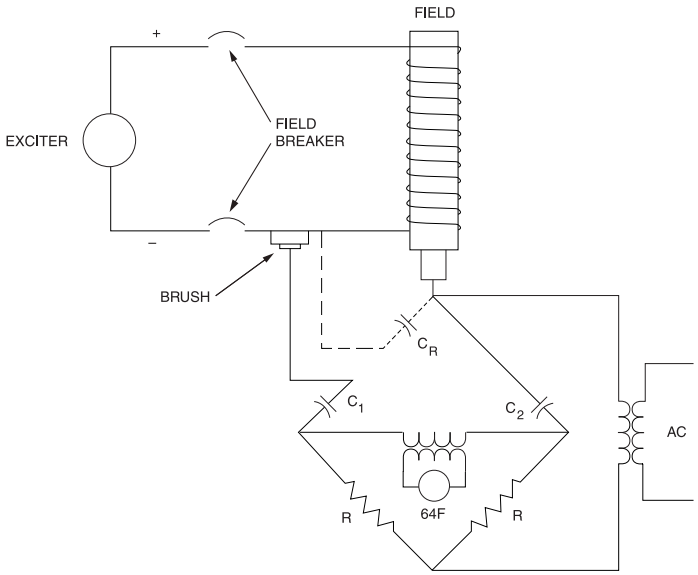

Figure 12-24—Field ground-fault protection using pilot brushes

Figure 12-25 illustrates a method for continuous monitoring of field grounds on brushless machines without using pilot brushes. The relay's transmitter is mounted on the generator field diode wheel. Its source of power is the ac brushless exciter system. Two leads are connected to the diode bridge circuit of the rotating rectifier to provide this power. Ground detection is obtained by connecting one lead of the transmitter to the negative bus of the field rectifier and connecting the ground lead to the rotor shaft. The transmitter detects the resistance change between the field winding and the rotor shaft. The transmitter's light emitting diodes (LEDs) emit light under normal conditions. Upon detection of a fault, the LEDs are turned off. A stationary receiver mounted on the exciter housing receives the light signal across the air gap. Loss of the LED light to the receiver actuates the ground relay and initiates a trip or alarm. Time delay of 10 s is provided.

If the generator field ground relay is used only to detect the first field ground and to sound an alarm, backup protection consisting of vibration-detecting equipment should be provided so that a second ground does not result in an abnormal amplitude of vibration. The vibration monitor should be arranged with contacts to trip the main and field breaker. If vibration is above the amount associated with short-circuit transients for faults external to the unit.

12.5.4.2 Tripping

From a protection viewpoint, the safest practice is to shut down the generator automatically when the first ground is detected. A ground fault can cause damage to the field. Moreover, a second ground fault may be imminent because of insulation problems in the field. Many industrial systems are designed to alarm with the field ground relay and have written

Copyright © 2001 IEEE. All rights reserved.

Copyright The Institute of Electrical and Electronics Engineers, Inc.
Provided by IHS under license with IEEE
No reproduction or networking permitted without license from IHS
Not for Resale

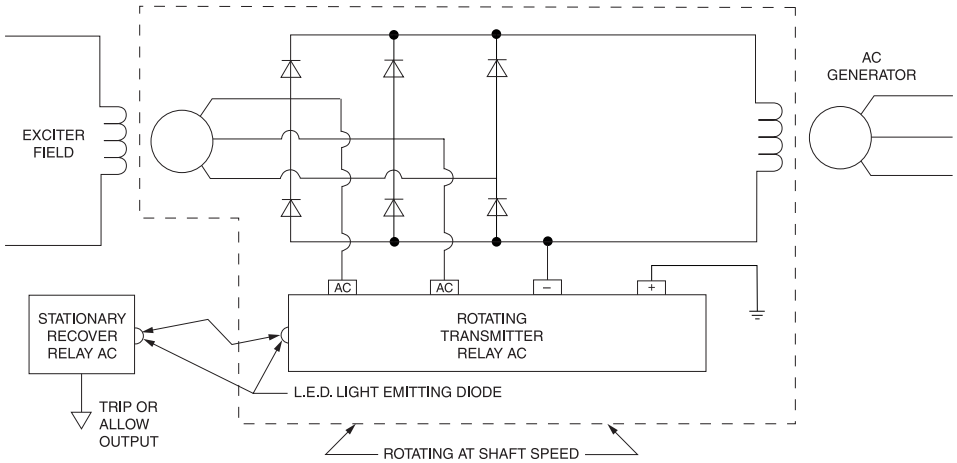

Figure 12-25—Field ground-fault protection for brushless machines

instructions for the operator to unload and shut down the machine in an orderly manner so that other machines can pick up the load thus avoiding a system disturbance.

12.5.5 Generator abnormal operating conditions

This subclause describes hazards to which a generator may be subjected that may not necessarily involve a fault in the generator. It discusses the typical means for detecting these abnormal operating conditions and the tripping practices.

12.5.5.1 Loss of field protection (Device 40)

Loss-of-field protection devices sense when a generator's excitation system has been lost. This protection is important when generators are operating in parallel or in parallel with a utility supply system, although it is not needed on a single-isolated unit. The source of excitation for a generator can be completely or partially removed through such incidents as accidental tripping of a field breaker, field open circuit, field short circuit (e.g., flashover of the slip rings), regulation system failure, or the loss of supply to the excitation system. Whatever the cause, a loss of excitation can present serious operating conditions for both the generator and the system.

When a generator loses excitation, it overspeeds and operates as an induction generator. It continues to supply some power to the system and receives its excitation from the system in the form of vars. In general, the severest condition for both the generator and the system is when a generator loses excitation while operating at full load. For this condition, the stator currents can be in excess of 2 per unit; and, because the generator has lost synchronism, high levels of slip-frequency currents can be induced in the rotor. These high current levels can cause dangerous overheating of the stator windings and the rotor within a short time. In addition, because the loss-of-field condition corresponds to operation at very low excitation,

Copyright © 2001 IEEE. All rights reserved.

Copyright The Institute of Electrical and Electronics Engineers, Inc.
Provided by IHS under license with IEEE
No reproduction or networking permitted without license from IHS
Not for Resale

overheating of the end portions of the stator core may result. The system itself is also jeopardized because it is forced to supply the lost kVAR output of the machine in trouble, plus provide still more kVARs in order to excite the unit as an induction generator. The level of kVARs drawn from the system can be equal to or greater than the generator kilovoltampere rating. The danger exists that the system would not have sufficient kVAR capacity for such a condition. The increased reactive flow across the system can cause voltage reduction and/or tripping of transmission lines and thereby adversely affect system stability. The increased reactive flow across the system can cause system voltage reduction and thereby affect the performance of generators in the same station or elsewhere on the system. The other machines' excitation systems would be operated at dangerously high levels that can cause overheating.

12.5.5.1.1 Steam turbine generators

The machine slip and power output is a function of initial machine loading, machine and system impedances, and governor characteristics. High system impedances tend to produce a high slip and a low power output.

If a generator is operating initially at full load when it loses excitation, it can reach a speed of 2% to 5% above normal. No general statements can be made with regard to the permissible time a generator can operate without field; however, at speeds other than synchronous, the time would be short.

12.5.5.1.2 Hydrogenerators

Due to saliency, the normal hydrogenerator may carry 20% to 25% of normal load without field and not lose synchronism. The actual load-carrying capability is a function of machine and system characteristics. Also, operation with nearly zero field and at reduced load is often necessary to accept line-charging current. However, if a loss of field occurs when a hydrogenerator is carrying full load, it behaves and produces the same effects as a steam turbine generator. High stator and induced field currents may damage the stator winding, the field windings, and/or the amortisseur windings; and the unit would impose a reactive drain on the system.

12.5.5.1.3 Protection

At least three types of protective devices can be used to provide loss-of-field protection. Each type has different relative cost, complexity of application, and degree of offered protection. The type chosen should be dependent upon the application, considering factors such as generator cost, relay cost, and importance of the generator output.

12.5.5.1.3.1 Distance relays

The most widely applied method for detecting a generator loss of field is the use of distance relays to sense the variation of impedance as viewed from the generator terminals. When a generator loses excitation while operating at various levels of loading, the variation of

Copyright © 2001 IEEE. All rights reserved.

--`,,`,,`,,`,,`,,`,,`---

Copyright The Institute of Electrical and Electronics Engineers, Inc.
Provided by IHS under license with IEEE
No reproduction or networking permitted without license from IHS Not for Resale

apparent impedance as viewed at the machine terminals has the characteristics shown on the *R-X* diagram in Figure 12-26.

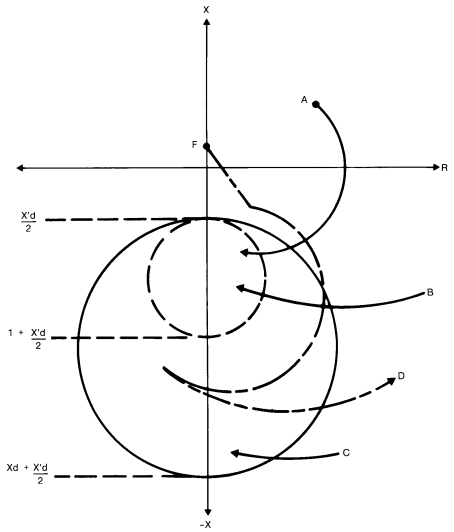

Figure 12-26—Loss-of-field impedance relay characteristics using offset mho distance relays

Two types of distance relaying schemes are used for detecting the impedances seen during a loss of field. One approach uses an offset mho distance relay. Figure 12-26 illustrates the typical characteristics of such a relay. The generator full-load operating condition is represented by Point A. When excitation is lost, such as from a shorted field winding, the apparent impedance of the generator traces a locus of points ending inside the operating characteristic. The impedance locus terminates to the right of the (–*x*) ordinate and approaches impedance values somewhat higher than the average of the direct and quadrature axes' subtransient impedances of the generator. The curve from Point B represents a locus of points of a moderately loaded generator. Curve C represents the locus of a lightly loaded and underexcited generator. In this case, the impedance locus may oscillate in and out of the relay characteristic depending upon its setting. For a loss of field at no load, the impedance as viewed from the machine terminals varies between the direct and quadrature axes' synchronous reactances (X_d , X_q).

For more sensitive protection, a second impedance element can be added that operates in a more restricted area of impedance values as represented by the dotted characteristics. The diameter of its circular characteristics is set equal to 1.0 per unit impedance and with an offset equal to one-half transient reactance (X_d'). It detects a loss of field from full load down to about 30% load as represented by Curve A and Curve B. This element is generally permitted to trip without any added external time delay and thereby provides fast protection for the more severe conditions in terms of possible machine damage and adverse effects on the system. The first element is then equipped with a time-delay relay set for 0.5 s or greater so that upstream fault-initiated system swings that may momentarily intrude into the operating area

Copyright © 2001 IEEE. All rights reserved.

Copyright The Institute of Electrical and Electronics Engineers, Inc.
Provided by IHS under license with IEEE
No reproduction or networking permitted without license from IHS
Not for Resale

of the relay, illustrated by Curve D, do not trip the generator. Loss of field on lightly loaded generators, illustrated by Curve C, is still cleared after the preset time delay, but with the inherent adverse effect on the system. This relay can be provided with slightly differing characteristics, but the ultimate quality of protection is the same.

On small or less important units, only a single relay would be used with the diameter of its circular characteristics set equal to the synchronous reactance of the machine (X_d) and with an offset equal to one-half transient reactance (X_d'). Time delay of 0.5 s to 0.6 s would be used with this unit in order to prevent possible incorrect operations from upstream fault-initiated system swings that may momentarily intrude into the operating area of the relay, illustrated by Curve D.

The second distance relaying approach is illustrated in Figure 12-27. This scheme uses a combination of an impedance unit, a directional unit, and an undervoltage unit applied at the generator terminals and set to look into the machine. The impedance (Z_2) and directional units are set to coordinate with the generator minimum excitation limiter and its steady-state stability limit. During abnormally low excitation conditions, such as might occur following a failure of the minimum excitation limiter, these units operate and sound an alarm to alert the station operator to correct the condition.

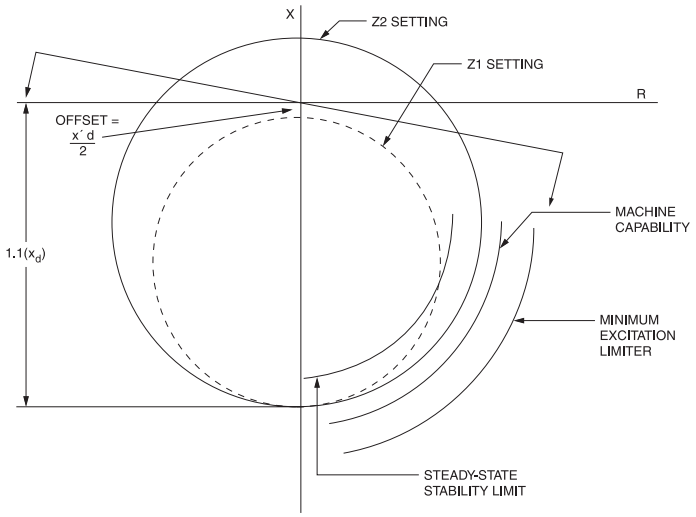

Figure 12-27—Loss-of-excitation protection using impedance, directional, and undervoltage units

Should a low-voltage condition also exist, indicating a loss-of-field condition, the undervoltage unit would operate and initiate tripping with a time delay of 0.25 s to 1.00 s.

Two relays may also be used in this scheme, with the second (shown as Z_1 on Figure 12-27 set with an offset equal to $X_d'/2$ and with the long reach intercept equal to 1.l times X_d. In this

Copyright © 2001 IEEE. All rights reserved.

Copyright The Institute of Electrical and Electronics Engineers, Inc.
Provided by IHS under license with IEEE
No reproduction or networking permitted without license from IHS
Not for Resale

case, the relay with the Z_1 setting should trip without any external time delay, and the other relay should be delayed by approximately 0.75 s to prevent operation on stable swings.

12.5.5.1.3.2 Reactive (or var) relay

A second type of loss-of-field relay utilizes the flow of reactive power into the generator. This relay operates much the same as the mho relay at much less expense. When the generator is operated with leading power factor, the power system attempts to provide reactive power to excite the generator. A relay that measures the reactive (var) flow into the generator can detect the loss of field and initiate a trip.

The var loss-of-field relay provides a characteristic curve in the power plane (or PQ diagram), similar to the curve of the generator's capability curve. The characteristic curve of the var loss-of-field relay may also be provided with a shift from the P axis on the PQ diagram. This shift allows the operation of the relay to be coordinated closely to the steady-state limit of the generator, while allowing limited operation in the leading power factor region. If the steady-state stability limit is exceeded, the generator may pull out of step.

Reverse-power relays may also be used to perform loss-of-field protection by connecting them to measure var flow instead of real power flow. The principle limitation is that it cannot always distinguish between the occasions when the generator is operating at a leading power factor because of system conditions and similar-appearing var flows due to loss of excitation.

12.5.5.1.3.3 DC undercurrent relays

The third protective scheme available involves the application of a dc undercurrent relay that is connected in series with the field. Its low cost makes it attractive for small generators and for any generators supplying noncritical loads where the generator has leads brought out through conventional slip rings. The relay may require the use of a timer in order to ride through momentary interruptions of current that might occur during short circuits in the power system. The relay would not indicate the loss of excitation due to faults in the field winding and may not operate during the presence of induced ac currents in the field winding during certain operating conditions.

12.5.5.1.4 Tripping

The loss-of-field protection is normally connected to trip the main generator breakers and the field breaker and to transfer unit auxiliaries. The field breaker is tripped to minimize damage to the rotor field in case the loss of field is due to a rotor field short circuit or a slip ring flashover. With this approach, if the loss of field were due to some condition that could be easily remedied, a tandem compound generator could be quickly resynchronized to the system.

This approach may not be applicable with once-through boilers or with units that cannot transfer sufficient auxiliary loads to maintain the boiler and fuel systems. In these cases, the turbine stop valves would also be tripped.

Copyright © 2001 IEEE. All rights reserved.

Copyright The Institute of Electrical and Electronics Engineers, Inc.
Provided by IHS under license with IEEE
No reproduction or networking permitted without license from IHS
Not for Resale

12.5.5.2 Unbalanced current protection

A number of system conditions may cause unbalanced three-phase currents in a generator. The most common causes are system asymmetries (e.g., untransposed lines), unbalanced loads, unbalanced system faults, and open circuits that result in an unbalance of the generator phase voltages. These system conditions produce negative-phase-sequence components of current that induce a double-frequency current in the surface of the rotor; the retaining rings; the slot wedges; and, to a smaller degree, the field winding. These rotor currents may cause high and possibly dangerous temperatures in a short time. Serious damage to the generator occurs if the unbalanced condition is allowed to persist indefinitely.

The ability of a generator to accommodate unbalanced currents is specified by ANSI C50.13-1989 in terms of negative-sequence current I_2 (see Table 12-1). The negative-sequence current is expressed as a percentage of rated stator current. ANSI C50.13-1989 specifies the continuous I_2 capability of a generator and the short-time capability of a generator, specified in terms I^2t. The standard further defines the value of constant K for various types of generators as listed below as I_2^2t = K where the negative-sequence current is expressed in per unit of the full-load current and the time is given in seconds.

Table 12-1—Continuous and short-time unbalanced current capability of generators

Type of generator	Permissible I_2 (%)
Salient pole	
With connected amortisseur windings	10
With non-connected amortisseur windings	5
Cylindrical rotor	
Indirectly cooled	10
Directly cooled (to 960 MVA)	8
Directly cooled (961 MVA to 1200 MVA)	6
Directly cooled (1201 MVA to 1500 MVA)	5
These values also express the negative sequence current capability at reduced generator kVA capabilities.	
Unbalanced fault negative sequence current capability is expressed in per unit of rated current and time is in seconds.	
Type of generator	**Permissible I_2^2t**
Salient pole generator	40
Synchronous condenser	30
Cylindrical rotor generators	
Indirectly cooled	20
Directly cooled (0-800 MVA)	10
Directly cooled (801-1600 MVA	(see ANSI C50.13-1989)
Source: ANSI C50.13-1989	

Copyright © 2001 IEEE. All rights reserved.

Copyright The Institute of Electrical and Electronics Engineers, Inc.
Provided by IHS under license with IEEE
No reproduction or networking permitted without license from IHS
Not for Resale

A generator shall be capable of withstanding, without injury, the effects of a continuous-current unbalance corresponding to a negative-sequence current I_2 of the values in Table 12-1, providing the rated kilovoltamperes is not exceeded and the maximum current does not exceed 105% of rated current in any phase.

12.5.5.2.1 Protection

A common practice is to provide protection for the generator for external unbalanced conditions that might damage the machine. This protection consists of a time-overcurrent relay that is responsive to negative-sequence current. The setting determines the level of protection offered by the relay and should be set to match the I_2^2t limit of the generator being protected. Two types of relays are available for this protection: an electromechanical time-overcurrent relay with an extremely inverse characteristic and a static relay with a time-overcurrent characteristic that matches the I^2t capability curves for generators.

The electromechanical relay was designed primarily to provide machine protection for uncleared unbalanced system faults. The negative-sequence current pickup of this unit is generally 0.6 per unit of rated full-load current and hence may not detect open conductors and/or severe unbalanced load conditions. Typical characteristics for this relay are shown in Figure 12-28.

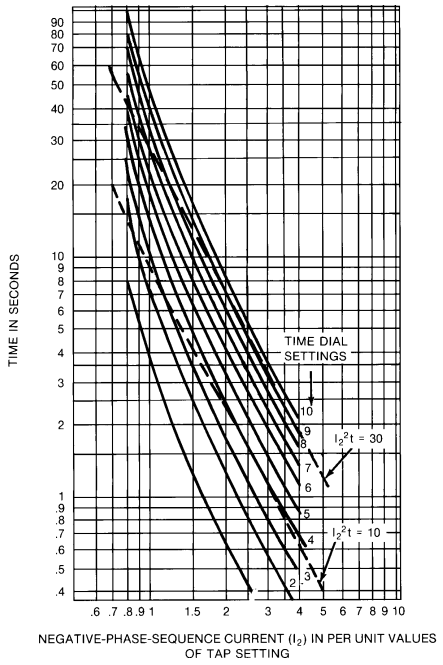

Figure 12-28—Characteristics of electromechanical negative-sequence overcurrent relay showing generator I_2^2t limits

Copyright © 2001 IEEE. All rights reserved.

Copyright The Institute of Electrical and Electronics Engineers, Inc.
Provided by IHS under license with IEEE
No reproduction or networking permitted without license from IHS
Not for Resale

The static relays are generally more sensitive and are capable of detecting and tripping for negative-sequence currents down to the continuous capability of a generator. Typical characteristics for this type of relay are shown in Figure 12-29.

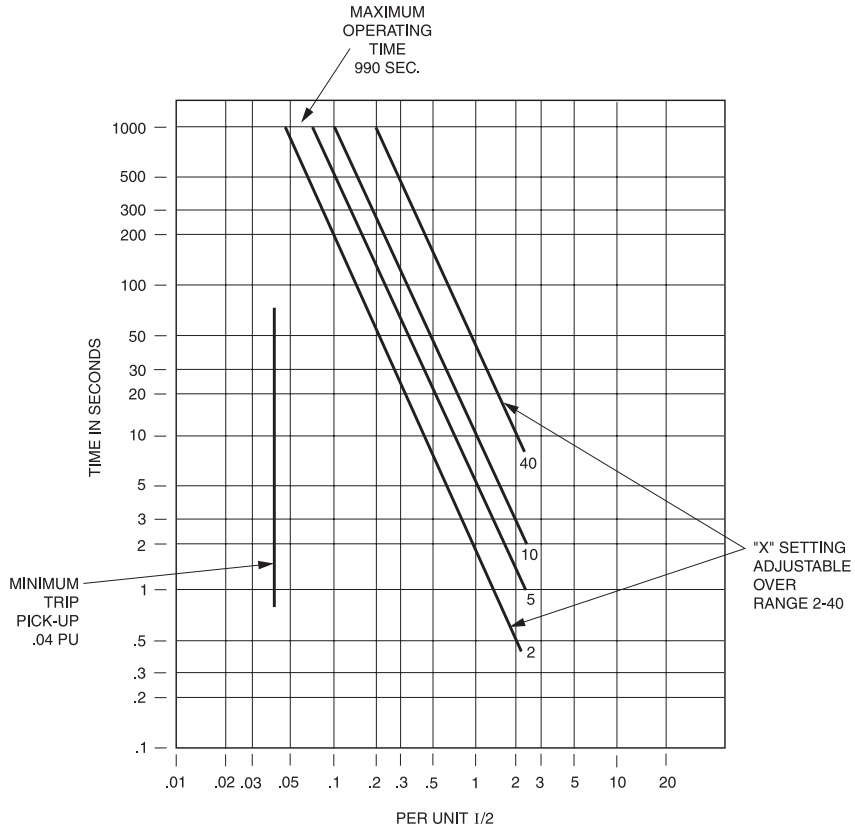

Figure 12-29—Characteristics of static negative-sequence overcurrent relay showing generator I_2^2t limits

Some relays can be provided with sensitive alarm units (I_2 pickup range of 0.03 per unit to 0.20 per unit), which can be used to forewarn an operator when a machine's continuous capability is exceeded. In some types of static relay, a meter can be provided to indicate the I_2 level in a machine.

12.5.5.2.2 Tripping

The negative-sequence relay is connected to trip the main generator breakers. This tripping is preferred if the machine auxiliaries permit operation under this condition because this approach allows quick resynchronization of the unit after the unbalanced conditions have been eliminated. If the machine auxiliaries do not permit operation of the machine with such tripping, then the negative-sequence relay must also trip the machine prime mover and the field and must transfer the auxiliaries.

Copyright © 2001 IEEE. All rights reserved.

--`,,`-`-`,,`,,`,`,,`---
Copyright The Institute of Electrical and Electronics Engineers, Inc.
Provided by IHS under license with IEEE
No reproduction or networking permitted without license from IHS
Not for Resale

12.5.5.3 Loss-of-synchronism protection

As machine sizes have increased, generation per-unit reactances have increased, and inertia constants have decreased. The culmination of these factors has resulted in reduced critical clearing times required to isolate a system fault near a generating plant before the generator losses synchronism with the power system. In addition to prolonged fault-clearing times, generator loss of synchronism can also be caused by low system voltage, low machine excitation, high impedance between the generator and the system, or some line switching operations. When a generator loses synchronism, the resulting high peak currents and off-frequency operation cause winding stresses, pulsating torques, and mechanical resonances that are potentially damaging to the generator and turbine generator shaft. To minimize the possibility of damage, the generator should be tripped without delay, preferably during the first half slip cycle of a loss-of-synchronism condition.

12.5.5.3.1 Protection

The protection normally applied in the generator zone (e.g., differential relaying, time-delay system backup) does not detect loss of synchronism. The loss-of-excitation relay may provide some degree of protection, but cannot be relied on to detect generator loss of synchronism under all system conditions. Therefore, if during a loss of synchronism the electrical center is located in the region from the high-voltage terminals of the generator step-up transformer down into the generator, separate out-of-step relaying should be provided to protect the machine. Description of the various relays used for loss of synchronism is beyond the scope of this recommended practice (see IEEE Std C37.102-1995).

12.5.5.3.2 Tripping

This protection can be connected to trip only the main generator breakers and thereby isolate the generator with its auxiliaries if the unit has full-load rejection capabilities. In this way, when system conditions have stabilized, the unit can be readily resynchronized to the system. If the unit does not have full-load rejection capability, this protection should be converted to trip and shut down the generator and the prime mover.

12.5.5.4 Overexcitation protection

ANSI C50.13-1989 and IEEE Std 67-1990 state that generators shall operate successfully at rated kilovoltamperes, frequency, and power factor at any voltage not more than 5% above or below rated voltage. Deviations in frequency, power factor, and voltages outside these limits can cause thermal distress unless the generator is specifically designed for such conditions. Overexcitation is one such deviation for which monitoring and protection schemes can be provided.

Overexcitation of a generator or any transformers connected to the generator terminals occurs when the ratio of the voltage to frequency applied to the terminals of the equipment exceeds 1.05 per unit for a generator (i.e., generator base) and 1.05 per unit at full load or 1.l per unit at no load at the high-voltage terminals for a transformer (i.e., transformer base). When these voltage-to-frequency ratios are exceeded, saturation of the magnetic core of the generator or

Copyright © 2001 IEEE. All rights reserved.

Copyright The Institute of Electrical and Electronics Engineers, Inc.
Provided by IHS under license with IEEE
No reproduction or networking permitted without license from IHS
Not for Resale

connected transformers can occur. Also, stray flux can be induced in nonlaminated components that are not designed to carry flux and can cause excessive interlaminar voltages between laminations at the ends of the core. The field current in the generator could also be excessive. This excess can cause severe overheating in the generator or transformer and eventual breakdown in insulation.

One of the primary causes of excessive voltage-to-frequency ratios on generators and transformers is operation of the unit under regulator control at reduced frequencies during startup and shutdown. With the regulator maintaining rated voltage while the unit is at 95% or lower speed, the voltage-to-frequency ratio at the terminals of the machine is 1.05 per unit or greater, and damage can occur to the generator and/or connected transformers. Generator rotor prewarming is an example of operating an unloaded machine at reduced terminal voltage and frequency.

Overexcitation can also occur during complete load rejection which leaves transmission lines connected to a generating station. Under this condition, the voltage-to-frequency ratio may exceed 1.25 per unit. With the excitation control in service, the overexcitation is generally reduced to safe limits in a few seconds. With the excitation control out of service, the overexcitation may be sustained, and damage can occur to the generator and/or transformers.

Failures in the excitation system or loss of signal voltage to the excitation control can also cause overexcitation.

Industry standards do not at present specify definite short-time capabilities for generators and transformers. However, manufacturers generally provide overexcitation capability limits for this equipment. Several methods of preventing an overexcitation condition are discussed in 12.5.5.4.1 through 12.5.5.4.3.

12.5.5.4.1 Voltage-to-frequency limiters in excitation control

The voltage-to-frequency limiter limits the output of the machine to a set maximum voltage-to-frequency ratio no matter what the speed of the unit. This limiter functions only in the automatic control mode. To provide protection when the unit is under manual control, the limiter may have a relay signal output that activates any additional protective circuits to trip the generator field. The relay circuit is functional whether the excitation control is in or out of service.

With or without a voltage-to-frequency limiter in the excitation control, a common practice is to provide separate voltage-to-frequency relaying to protect the station transformers and the generator, when the excitation control is out of service.

12.5.5.4.2 Voltage-to-frequency relays

Several forms of voltage-to-frequency relays are available and may be provided with the generating unit. One type uses a fixed-time single voltage-to-frequency relay set at 110% of normal, which alarms and trips in 6 s. A second type has an inverse characteristic that can be applied to protect a generator and/or transformer from an excessive level of voltage-

 Copyright © 2001 IEEE. All rights reserved.

Copyright The Institute of Electrical and Electronics Engineers, Inc.
Provided by IHS under license with IEEE
No reproduction or networking permitted without license from IHS Not for Resale

to-frequency ratio and time-delay voltage-to-frequency ratio. A minimum operate level of voltage-to-frequency ratio and time delay can usually be set to provide a close match of the generator-transformer-combined voltage-to-frequency ratio characteristics. The manufact-urers' voltage-to-frequency ratio limitations should be obtained if possible and used to determine the combined characteristic.

12.5.5.4.3 Exciter relays

A dc relay (Device 53) can be connected across a field shunt to check when the machine field voltage has reached a given value. During startup, this supplemental off-line protection can help prevent an overexcitation condition if something is wrong with the potential circuits and the voltage-to-frequency relays are unable to function. This relay is set to operate when field current exceeds its rated full-field no-load voltage by a certain value. Operating high speed with a short time delay, this scheme can be set to alarm, initiate automatic field run back, and/or trip the generator.

12.5.5.4.4 Tripping

Overexcitation protection is generally connected to trip the main generator breakers and the field breakers and transfer auxiliaries if necessary.

12.5.5.5 Antimotoring protection

Motoring of a generator occurs when the energy supply to the prime mover is cut off while the generator is still on line. When this event occurs, the generator acts as a synchronous motor and drives the prime mover. While this condition is defined as generator motoring, the primary concern is the protection of the prime mover, which can be damaged during a motoring condition.

12.5.5.5.1 General considerations

Motoring causes many undesirable conditions. A steam turbine could overheat due to the loss of the cooling effect provided by the steam. A diesel or gas engine could either catch fire or explode. In a steam turbine, the rotation of the turbine rotor and blades in a steam environment causes idling or windage losses. Because windage loss is a function of the diameter of rotor disc and blade length, this loss is usually greatest in the exhaust end of the turbine. Windage loss is also directly proportional to the density of enclosing steam. Thus, any situation in which the steam density is high causes dangerous windage losses. For example, if vacuum is lost on the unit, the density of the exhaust steam increases and causes the windage losses to be many times greater than normal. Also, when high-density steam is entrapped between the throttle valve and the interceptor valve in reheat units, the windage losses in the high-pressure turbine are high.

Windage loss energy is dissipated as heat. The steam flow through a turbine has a two-fold purpose: to give up energy to cause rotation of the rotor and to carry away the heat of the turbine parts. Because no steam flows through the turbine during motoring, the heat of the windage losses is not carried away and the turbine is heated. Even when the unit has been

Copyright © 2001 IEEE. All rights reserved.

Copyright The Institute of Electrical and Electronics Engineers, Inc.
Provided by IHS under license with IEEE
No reproduction or networking permitted without license from IHS
Not for Resale

synchronized, but no load has been applied, and enough steam is flowing through the unit to supply the losses, the ventilating steam flow may not be sufficient to carry away all of the heat generated by the windage losses. Although the generator is not motoring under this condition, the problems caused in the turbine are the same, and protection should be provided.

Because the temperature of the turbine parts is controlled by the steam flow, various parts cool or heat at abnormal, uncontrolled rates during motoring. This irregularity can cause severe thermal stresses in the turbine parts. Another problem resulting from this temperature change can be unequal contraction or expansion of the turbine parts. This irregularity could cause a rub between rotating and stationary parts. Because a rub generates heat, the problem is made more severe (as with windage losses) by the lack of ventilation steam flow to carry the heat away.

A maximum permissible time is established for how long a steam turbine can be operated in a motoring condition, and this time is generally a function of the rated speed of the unit. These data can readily be obtained from the manufacturer for a particular steam-turbine unit.

Windage loss is not a particular problem in other types of prime movers, but they exhibit additional motoring difficulties. Gas turbines, for example, may have gear problems when being driven from the generator end. With hydroturbines, motoring can cause cavitation of the blades on low water flow. If hydro units are to operate as synchronous condensers, the unit will be motoring. This fact should be recognized in any motoring protection. With diesel-engine generating units, explosion and fire from unburned fuel are additional dangers. Motoring protection should, therefore, be provided for all generating units except units designed to operate as synchronous condensers, such as hydro units.

12.5.5.5.2 Reverse-power relay

From a system standpoint, the primary indication of motoring is the flow of real power into the generator acting as a synchronous motor. The reverse-power relay detects the reverse flow of power (i.e., watts) that would occur should the prime mover lose its input energy. The magnitude of motoring power varies considerably depending on the type of prime mover, as shown in Table 12-2.

Table 12-2—Maximum motoring power for prime movers

Steam turbine	3.0%
Water wheel turbine	0.2%
Gas turbine	50.0%
Diesel engine	25.0%

Copyright © 2001 IEEE. All rights reserved.

--`,,`-`-`,,`,,`,`,,`---

Copyright The Institute of Electrical and Electronics Engineers, Inc.
Provided by IHS under license with IEEE
No reproduction or networking permitted without license from IHS Not for Resale

The sensitivity and setting of the relay are dependent upon the type of prime mover involved because the power required to motor is a function of the load and losses of the idling prime mover.

The reverse-power relay should have sufficient sensitivity so that the motoring power provides 5 to 10 times the minimum pickup power of the relay.

In gas turbines, for example, the large compressor load represents a substantial power requirement from the system, up to 50% of the nameplate rating of the unit; therefore, the sensitivity of the reverse-power relay is not critical. A diesel engine with no cylinders firing represents a load of up to 25% of rating; therefore, again, no particular sensitivity problem exists.

With hydroturbines, when the blades are under the tail-race water level, the percent motoring kilowatts is high. When the blades are above the tail-race level, however, the reverse power is low, between 0.2% to 2.0% of rated, and a sensitive reverse-power relay may be needed.

Steam turbines operating under full vacuum and zero steam input require about 0.5% to 3.0% of rating to motor. This condition may be detected by a sensitive reverse-power relay. If the turbine were operated with its valves only partially closed to, for example, slightly less than the no-load value, the electrical input from the system could be essentially zero, and the reverse-power relay could not detect the condition. Because overheating of the turbine could still occur, some additional means of protection is required, such as the schemes discussed in 12.5.5.5.3 through 12.5.5.5.6.

A directional power relay with either definite- or inverse-time characteristics is frequently used to introduce sufficient time delay necessary to prevent operation during power swings caused by system disturbances or when synchronizing the machine to the system. A time delay of 10 s to 30 s is typical. Either a single-phase or a three-phase relay may be used although a single-phase relay calibrated in three-phase watts is frequently selected.

12.5.5.5.3 Exhaust hood temperature

Because the prime cause of distress in a motoring steam turbine is the temperature rise due to the windage losses, temperature-sensing devices can be used for protection. Because windage loss is generally most severe in the exhaust end of the turbine, a temperature-sensing device located in the exhaust hood is often used as auxiliary protection. This device, set at approximately 250 °F, is used to alarm the operator for this motoring condition.

This device should not be used as primary protection because the measured temperatures vary with the location on the exhaust end of the turbine. Placement of the detector is important. Also, the reliability of existing detectors is questionable. Some other form of protection should, therefore, be used as primary protection.

Copyright © 2001 IEEE. All rights reserved.

Copyright The Institute of Electrical and Electronics Engineers, Inc.
Provided by IHS under license with IEEE
No reproduction or networking permitted without license from IHS
Not for Resale

12.5.5.5.4 Valve limit switches

Limit switches on the turbine valves provide indication of when steam flow has been either completely shut off or reduced to harmfully low levels. By arranging these switches in the appropriate series-parallel arrangement, protection against loss of steam flow can be provided.

This method was used for many years as the primary protection for motoring of steam turbines and is still used for the smaller units. With the increased number of valves and corresponding limit switches on the larger modern units, the arrangement became complex. Also, because a number of switches are in series, a failure of any one switch would render the protection scheme inoperative. For these reasons, most present-day units use the control oil pressure and turbine steam flow schemes (see 12.5.5.5.5 and 12.5.5.5.6, respectively).

12.5.5.5.5 Control oil pressure

The operation of the valves in a steam turbine is controlled by two oil systems: a turbine-trip system and a governing oil system. The turbine-trip oil system is used as an emergency shutdown system; and, when the pressure is reduced on this system, all valves close. The pressure in the governing oil system positions the governor and intercept valves to control load during normal operation. Pressure switches in these two systems provide a simple and reliable method of detecting a motoring condition.

Because loss of pressure in the turbine-trip oil system normally indicates complete closure of all steam valves, the contact of the pressure switch in this system may be used for instantaneous electrical tripping of the unit. For security against possible overspeed, the oil system trips may be supervised by a reverse-power relay. The pressure switch in the governing oil system is set at the no-load steam flow position and, after 1 min, trips the turbine-trip oil system, which in turn trips the electrical system. The governing oil trip system is, of course, supervised by an "a" contact on the unit breaker to prevent tripping of the turbine-trip system before synchronizing.

12.5.5.5.6 Turbine steam flow

Steam flow equal to or greater than synchronous-speed no-load steam flow is an indication that the unit is not being motored. The steam flow, even at this low percentage of rated steam flow, can accurately be determined by measuring the pressure drop across the high-pressure turbine element. Use of a differential pressure switch across this high-pressure element, instead of the governing oil pressure switch, is the most accurate and reliable method. It functions independently of the type of control system, hydraulic or electrohydraulic, and is the recommended scheme for large steam turbines. Again, for security against possible overspeed, this system may be supervised by a reverse-power relay.

12.5.5.5.7 Protection summary

On steam turbine units, the primary motoring protection used is the control oil pressure and turbine steam flow scheme, with the reverse-power relay used for backup and security and

Copyright © 2001 IEEE. All rights reserved.

Copyright The Institute of Electrical and Electronics Engineers, Inc.
Provided by IHS under license with IEEE
No reproduction or networking permitted without license from IHS Not for Resale

with the exhaust hood temperature used as an alarm. With gas turbines, diesel engines, and hydroturbines, the reverse-power relay is primary protection.

12.5.5.6 Overvoltage protection

Overvoltage protection is normally provided on machines such as hydrogenerators where excessive terminal voltages may be produced following load rejection without necessarily exceeding the voltage-to-frequency ratio limit of the machine. The hydrogenerator overspeed could exceed 200% of normal. Under this condition on a voltage-to-frequency basis, the overexcitation may not be excessive, but the sustained voltage magnitude may be above permissible limits. In general, this problem does not exist with steam or gas turbines because the rapid response of the speed governor and voltage regulator systems preclude this possibility.

12.5.5.6.1 Protection

Protection for generator overvoltage is provided with a frequency-compensated (or frequency-insensitive) overvoltage relay. The relay has both instantaneous function and time-delay function with an inverse-time characteristic. The instantaneous function is generally set to pick up at 130% to 150% of normal voltage while the inverse-time function is set to pick up at about 110% of normal voltage.

12.5.5.6.2 Tripping

The protection is generally connected to trip the main generator breakers and the field breakers.

12.5.5.7 Abnormal frequency protection

The operation of generators at abnormal frequencies (either overfrequency or underfrequency) generally results from full or partial load rejection or from overloading of the generator. Overloading a generator may be caused by a variety of system disturbances and/or operating conditions. The possibility of damage to steam- or gas-turbine generators exists when operating at reduced frequency for sufficient time. In general, underfrequency operation of a turbine generator is more critical than overfrequency operation because the operator does not have the option of control action. Therefore, it is often recommended that some form of underfrequency protection be provided for steam- and gas-turbine generators. Underfrequency and overfrequency protection is often required by the electric utility when industrial or cogeneration units are operated in parallel with the utility.

12.5.5.7.1 Abnormal frequency capabilities of turbine generators

Both the generator and the turbine are limited in the degree of abnormal frequency operation that can be tolerated. At reduced frequencies, the output capability of a generator is reduced. The reduction in output capability coupled with possible overloading of the generator during a system disturbance may result in thermal damage to the generator if its short-time thermal capability is exceeded.

Copyright © 2001 IEEE. All rights reserved.

Copyright The Institute of Electrical and Electronics Engineers, Inc.
Provided by IHS under license with IEEE
No reproduction or networking permitted without license from IHS
Not for Resale

The turbine is usually considered to be more restrictive than the generator at reduced frequencies because of possible mechanical resonances in the many stages of turbine blades. Departure from rated speed brings stimulus frequencies closer to one or more of the natural frequencies of the various blades and an increase in vibratory stresses. As vibratory stresses increase, damage is accumulated and may lead to cracking of some parts of the blade structure, most likely the tie wires or blade covers. Tie wire and blade cover cracks are not catastrophic failures, but they change the vibration behavior of the blade assembly so that it is likely to have natural resonance frequencies closer to rated speed. This change may produce blade fatigue during normal running conditions. Turbine manufacturers provide time limits for abnormal frequency operation. The effects of abnormal frequency operation are cumulative.

12.5.5.7.2 Protection

Underfrequency protection for steam- and gas-turbine generators is provided by the implementation of automatic load-shedding programs on the power system. These load-shedding programs should be designed so that, for the maximum possible overload condition, sufficient load is shed to quickly restore system frequency to near normal.

The underfrequency relays and timers are usually connected to trip the generator.

12.5.5.8 Undervoltage protection

The undervoltage relay can be used to serve any one of several protective functions depending on the voltage tap and time-dial setting. The automatic voltage regulator normally maintains the voltage within specified limits on multiple-isolated systems; therefore, a sustained undervoltage could indicate a severe overload condition or the loss of a generator. The relay may be used to initiate the starting of a standby unit. For single-machine operation, the relay could be used to remove load from the generator should a regulator failure or other malfunction cause the unit to be unable to maintain proper voltage. The relay may also be used to provide a form of single-phase short-circuit protection because close-in or internal faults would normally depress the voltage sufficiently to cause relay operation. On isolated systems with multiple generators, the undervoltage relay may be used to provide a backup to the backup protective devices. In this application, a time delay of 15 s to 20 s is necessary in order to give all other relays an opportunity to operate.

12.5.5.9 System backup protection

The protective relaying described in 12.5.5.1 through 12.5.5.8 provides protection for all types of faults in the generator zone and for generator abnormal operating conditions. In addition to this protection, a common practice is to provide protective relaying that detects and operates for system faults external to the generator zone that are not cleared due to some failure of system protective equipment. This protection, generally referred to as system backup, is designed to detect uncleared phase and ground faults on the system. This function serves to protect the distribution system components against excessive damage and to prevent the generator and its auxiliaries from exceeding their thermal limitations.

Copyright © 2001 IEEE. All rights reserved.

Copyright The Institute of Electrical and Electronics Engineers, Inc.
Provided by IHS under license with IEEE
No reproduction or networking permitted without license from IHS Not for Resale

12.5.5.9.1 System phase-fault backup

Two types of relays are commonly used for system phase-fault backup: a distance relay or a time-overcurrent relay (either voltage-restrained or voltage-controlled). The choice of relay in any application is usually a function of the type of relaying used on the distribution or transmission system. In order to simplify coordination, the distance backup relay is used where distance relaying is used for transmission-line protection, while the overcurrent backup relay is used where overcurrent relaying is used for line protection. In industrial and commercial application, where the generator is connected to a bus that serves distribution and utilization equipment using overcurrent devices, the overcurrent relay (Device 51V) is used. Where the output of the generator is stepped up to a transmission voltage, an impedance relay (Device 21) is normally used.

12.5.5.9.1.1 Application of distance backup

One zone of distance relaying with an mho characteristic is commonly used for system phase-fault backup. The proper currents and potentials must be used so that these relays see correct impedances for system faults. If required, this phase shift is accomplished by using auxiliary VTs connected in delta-wye as shown in Figure 12-30. When a generator is connected directly to a system, the connections to the relay are shown in Figure 12-31. In both cases, for the connections shown, the relay not only provides backup for system faults, but it also provides some backup protection for phase faults in the generator and generator zone before and after the generator is synchronized to the system.

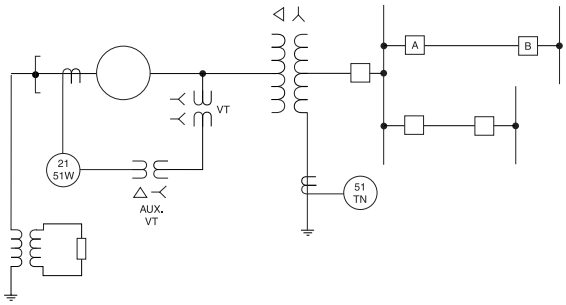

Figure 12-30—Application of system backup relays for unit generator-transformer arrangement

12.5.5.9.1.2 Overcurrent backup

In general, a simple time-overcurrent relay cannot be properly set to provide adequate backup protection. Users and system designers are reluctant to use any relay that operates solely on overcurrent for fear that it might trip off the generator when the load demand on it is the greatest. The use of ordinary time-overcurrent relays presents a dilemma in attempting to determine the proper current and time settings. If the current and time settings are too low, the relay may trip the generator unnecessarily on normal overloads. If the settings are too high to allow for the proper coordinating time interval for selectivity with downstream devices, the relay may not respond at all due to the decaying characteristic of the generator fault current.

Copyright © 2001 IEEE. All rights reserved.

Copyright The Institute of Electrical and Electronics Engineers, Inc.
Provided by IHS under license with IEEE
No reproduction or networking permitted without license from IHS
Not for Resale

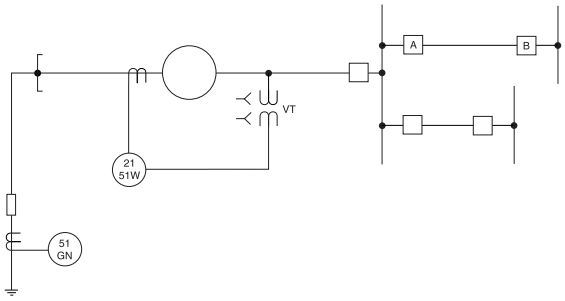

Figure 12-31—Application of system backup relay for generator connected directly to system

Thus ordinary overcurrent relays cannot be used without the likelihood of false operation occurring. In the successful application of these relays, it is, therefore, necessary to know not only the fault characteristics of the generator, but also the system emergency conditions that call for backup relay operation, and the characteristics of the relays available for that purpose.

The pickup setting of this type of relay would normally have to be set from 1.5 to 2 times the maximum generator rated full-load current in order to prevent unnecessary tripping of the generator during some emergency overload conditions. With this pickup setting and with time delays exceeding 0.5 s, the simple time-overcurrent relay may never operate because the generator-fault current may have decayed below relay pickup. After 0.5 s or more, generator-fault current is determined by machine synchronous reactance; and the current magnitude could approach generator rated full-load current, which would be below the relay setting.

The type of overcurrent device generally used for system phase-fault backup protection is either a voltage-restrained or voltage-controlled time-overcurrent relay. Both types of relays are designed to provide security under normal and emergency overload conditions and still provide adequate sensitivity for the detection of faults.

12.5.5.9.1.2.1 Voltage-dependent overcurrent relays

These overcurrent relays are specially constructed to make their operating characteristics a function of voltage and current. As the magnitude of the voltage applied to the coil decreases from rated value, the operating characteristic is modified so that the relay becomes more sensitive. Two types of overcurrent relays are customarily used: voltage-restrained and voltage-controlled.

a) The voltage-restrained overcurrent relay consists of a conventional inverse time-overcurrent function and a restraining voltage function that effectively reduces the sensitivity setting of the overcurrent function proportionally over a 4:1 range. The relay is calibrated and rated for a range of tap settings, for example, 0.5 A to 16.0 A, with 100% of the voltage applied to the restraint coil. As the voltage is reduced, the current required to operate the relay at a given tap setting drops. This change gives an infinite series of characteristic curves. The performance at selected values of voltage is given as follows:

Copyright © 2001 IEEE. All rights reserved.

Copyright The Institute of Electrical and Electronics Engineers, Inc.
Provided by IHS under license with IEEE
No reproduction or networking permitted without license from IHS
Not for Resale

Rated voltage (V)	Percent of pickup, tap setting
100	100
78	78
48	48
25	25
0	25

b) The voltage-controlled overcurrent relay consists of a conventional inverse time-overcurrent function and a high-speed voltage function. The voltage function controls when the overcurrent function senses current. The high-speed voltage function is adjustable over a range of 40% to 100% of rated voltage depending upon manufacturer. When the applied voltage is above the pickup setting, its contacts connected in the circuit of the overcurrent function are open; and no operating output (i.e., torque) is produced regardless of current magnitude. When the applied voltage falls below the dropout value, the contacts in the overcurrent function circuit close. This event enables the relay to produce an operating output and operate as a conventional overcurrent relay. If the current is above the tap setting, then it operates in accordance with its inherent time-current characteristics (TCCs). A clear distinction can thus be made between normal no-fault conditions and abnormal fault conditions.

12.5.5.9.1.2.2 Settings

Examples of the considerations for selecting the tap and time-dial settings for both the voltage-restrained and voltage-controlled overcurrent relays show the basic differences between the two types. Each relay is to be applied on the 19 500 kVA generator whose decrement curves have been calculated and plotted in Figure 12-9. The criteria for selecting the relay tap setting are as follows:

a) The relay should pick up on synchronous current for 0 V to the relay (i.e., constant excitation).

b) The relay should not pick up for moderate overloads up to 150% of generator full-load current with 100% of voltage on the potential coil.

Example for voltage-controlled relay

The tap values of the voltage-controlled relay are based on the current flowing when the voltage is below the dropout setting on the voltage function (potential coil). With the voltage above the pickup setting, the relay is effectively removed from the circuit. Calculate the tap setting so that it is less than the sustained fault current of 586 A.

Copyright © 2001 IEEE. All rights reserved.

Copyright The Institute of Electrical and Electronics Engineers, Inc.
Provided by IHS under license with IEEE
No reproduction or networking permitted without license from IHS
Not for Resale

$$I_{fault} = \frac{I_{FLA}}{X_d} = \frac{903}{1.54} = 586 \text{ A}$$

$$\text{tap value} = \frac{I_{fault}}{\text{CT ratio}} = \frac{586}{1200 \div 5} = 2.44 \text{ A}$$

Select a 2 A tap.

The relay operates because the sustained fault current is 1.22 multiples of relay pickup, as illustrated in Figure 12-32. This relay should be selected to have a setting range that includes a 2.0 setting. (Using a relay with a 1.5 A tap could be selected for even greater sensitivity, that is, 1.63 multiples.)

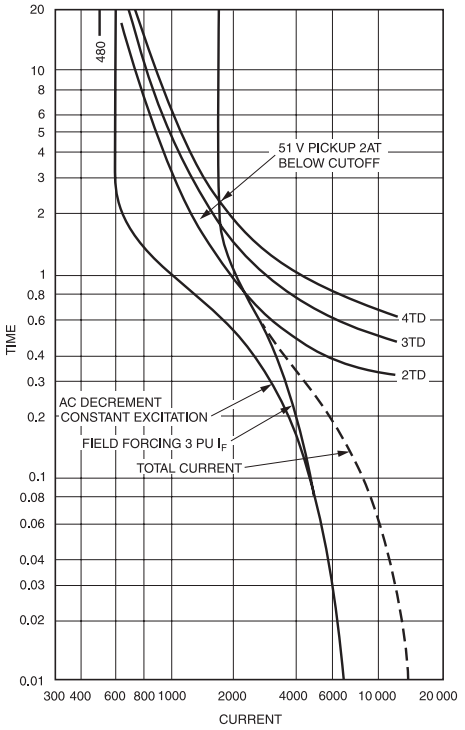

Figure 12-32—Voltage-controlled relay, 19 500 kVA generator, fault-current decrement curves with backup overcurrent relays

Example for voltage-restrained relay

Because the current tap values are based on normal operating conditions, that is, 100% of restraint voltage applied, calculate the tap setting to be equal to or greater than 150% of full-load current.

$$\text{tap value} = I_{FL} \times \frac{1.5}{\text{CT ratio}} = \frac{903 \times 1.5}{1200 \div 5} = 5.6 \text{ A}$$

Copyright © 2001 IEEE. All rights reserved.

Copyright The Institute of Electrical and Electronics Engineers, Inc.
Provided by IHS under license with IEEE
No reproduction or networking permitted without license from IHS
Not for Resale

Select a 6 A tap (i.e., 159% of full-load current).

Verify that the relay will operate at 0 V. At 0 V, the relay sensitivity is reduced to 25% so

$$I_{pickup} = 6 \times 0.25 \times \frac{1200}{5} = 360 \text{ A}$$

From the decrement curve in Figure 12-33, it is determined that the relay picks up because the sustained fault current is 586 A, or 1.63 multiples of pickup. The relay should be selected to have a range that includes a 6 tap setting.

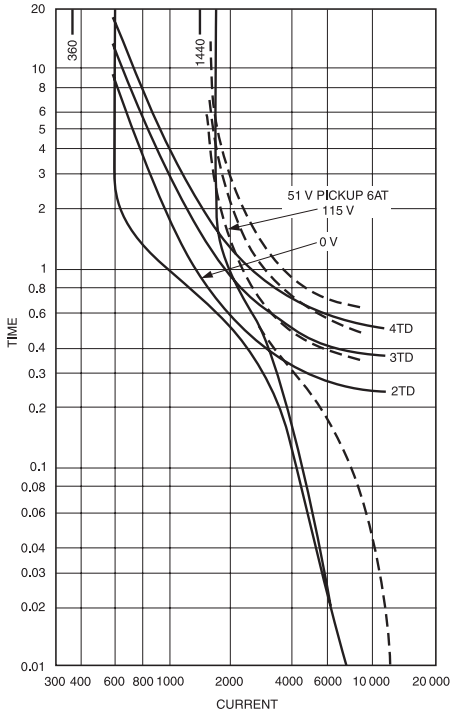

Figure 12-33—Voltage-restrained relay, 19 500 kVA generator, fault-current decrement curves with backup overcurrent relays

12.5.5.9.1.2.3 Conclusion

Two observations can be made from the selection process demonstrated in 12.5.5.9.1.2.2. First, the type of relay selected makes a significant difference in the proper choice of tap range. Second, with the tap set as described, from the inception of the fault, the current in the relay will always be above its pickup value; thus, the relay contacts will ultimately close.

If applied properly, the overcurrent pickup level in both types of relays is below the generator-fault current level as determined by synchronous reactance.

Copyright © 2001 IEEE. All rights reserved.

Copyright The Institute of Electrical and Electronics Engineers, Inc.
Provided by IHS under license with IEEE
No reproduction or networking permitted without license from IHS
Not for Resale

To provide system phase-fault backup, three voltage-restrained or voltage-controlled time-overcurrent relays are connected to receive currents and voltages in the same manner as the distance relays illustrated in Figure 12-30 and Figure 12-31.

12.5.5.9.2 System ground-fault backup

Ground-fault backup can be provided with a simple time-overcurrent relay having an inverse-time or very inverse-time characteristic. When the generator is connected in a unit generator-transformer arrangement, the ground backup relay is connected to a CT in the neutral of the step-up transformer as shown in Figure 12-30.

When the generator is connected directly to a system, the ground backup relay is connected to a CT in the generator neutral as shown in Figure 12-31.

12.5.5.9.3 Settings

Ideally, the phase- and ground-fault backup relays are set to detect and operate for uncleared bus and transmission-line faults outside of the generator zone. Where VT static exciters are used, the generator-fault current can decay quite rapidly when voltage is low at the generator terminals due to a fault. As a consequence, the overcurrent phase-fault backup relay with long time delays may not operate for system faults. Therefore, the performance of these relays should be checked with the fault-current decrement curve for a particular generator and VT static excitation system. Both the phase and ground backup relays should be time-coordinated with the protection on all system elements outside of the generator zone to ensure proper selectivity; however, this step may not always be possible.

12.5.5.9.4 Tripping

Two tripping modes commonly used with the system backup protection are as follows:

a) The system backup relays are connected to energize a hand-reset lockout relay, which trips the main generator breakers, the field and/or the exciter breakers, and the prime mover. See the caution in 12.5.5.1.4.
b) The system backup relays are connected in a two-step tripping mode.
    1) First-time step: Trip only the main generator breakers. (When tripping in this mode, dangerous generator overspeed may result.) The generator must be capable of full load rejection.
    2) Second-time step: Energize a hand-reset lockout relay, which initiates machine shutdown.

12.5.5.10 Generator breaker failure protection

A functional diagram of a typical generator zone breaker failure scheme is shown in Figure 12-34. Like all such schemes, when the protective relays detect an internal fault or an abnormal operating condition, they attempt to trip the generator and at the same time initiate the breaker-failure timer.

Copyright © 2001 IEEE. All rights reserved.

--`,,`-`-`,,`,,`,`,,`---

Copyright The Institute of Electrical and Electronics Engineers, Inc.
Provided by IHS under license with IEEE
No reproduction or networking permitted without license from IHS Not for Resale

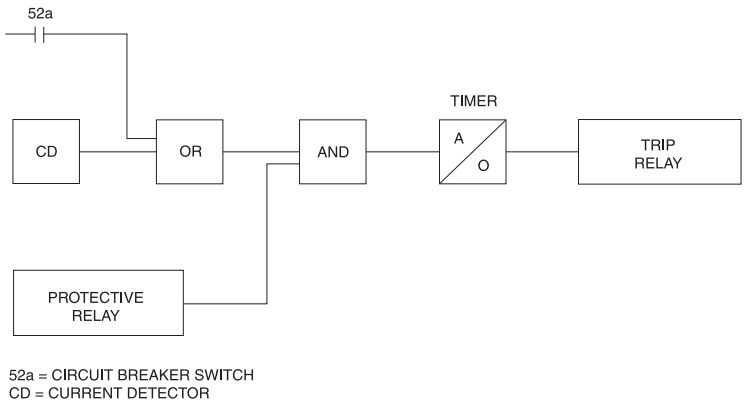

Figure 12-34—Functional diagram of a generator zone breaker failure scheme

If a breaker does not clear the fault or abnormal condition in a specified time, the timer trips the necessary breakers to remove the generator from the system. As shown in Figure 12-34, to initiate the breaker-failure timer, a protective relay must operate and a current detector or a breaker "a" switch. The breaker "a" switch must be used in this case because the faults and/or abnormal operating conditions (e.g., stator or bus ground faults, overvoltage-to-frequency excitation, excessive negative sequence, excessive underfrequency, reverse power flow) may not produce sufficient current to operate the current detectors.

Breaker-failure schemes are connected to energize a hand-reset lockout relay, which will trip the necessary backup breakers.

12.5.5.11 VTs

Two possible areas of concern exist with the VT used in the generator zone:

— Blown fuses (loss of VT signal)
— Ferroresonance

12.5.5.11.1 Blown fuses

A common practice is to use two or more sets of VTs in the generator zone. These VTs, connected grounded-wye-grounded-wye, normally have secondary and possibly primary fuses and are used to provide potential to a number of protective relays and the voltage regulator. If one or more of the fuses blow in the VT circuits, the secondary voltages applied to the relays and voltage regulator are reduced in magnitude and shifted in phase angle. This change in voltage can cause both the relays (e.g., Device 21, Device 32, Device 40, Device 46, Device 51V) to misoperate and the regulator to overexcite the generator.

To eliminate the possibility of such misoperations, a common practice is to apply a voltage-balance relay, which compares the three-phase secondary voltages of two sets of VTs as shown in Figure 12-35. When the two sets of VTs have output voltage alike, the relay is

Copyright © 2001 IEEE. All rights reserved.

Copyright The Institute of Electrical and Electronics Engineers, Inc.
Provided by IHS under license with IEEE
No reproduction or networking permitted without license from IHS
Not for Resale

balanced; and both the right and left contacts are open. If the fuses blow in one set of VTs, the resulting unbalance causes the relay to operate. When a fuse opens in any phase of one set of VTs, the unbalance causes its associated contact to close. When a fuse opens in the second set of VTs, its associated contacts close. The relay is connected to alarm, remove the voltage regulator from service, and block possible incorrect tripping by protective relays whose performance may be affected by the change in potential. The voltage-balance relay should be set as sensitive as possible because corrosion or poor contact of VT stabs could result in a voltage drop in the circuit significant enough for regulator runaway (i.e., overexcitation), but too small for detection by the relay.

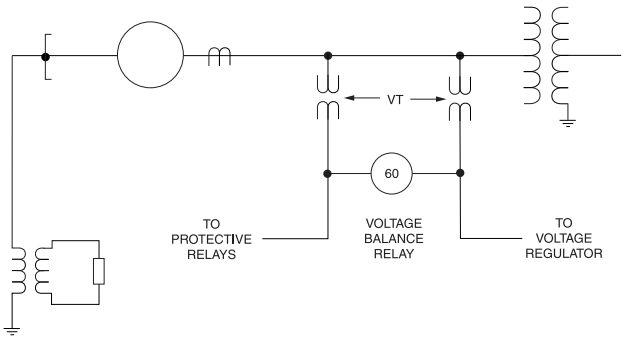

Figure 12-35—Application of voltage-balance relay

When two sets of VTs on the generator circuit cannot be justified, the bus potential transformers may be used as the second set so long as dead bus startup of the generator is not necessary.

12.5.5.11.2 VT ferroresonance

Ferroresonance can occur when grounded VTs are connected to an ungrounded system. Under this condition, the voltage appearing on one or more VTs could be distorted 60 Hz or subharmonic voltages, and the VTs could be operating overexcitedly well in the saturated region. The VT exciting currents would be high; and if permitted to operate in this condition, the VTs would fail thermally in a relatively short time.

The possibility of VT ferroresonance can be minimized by using line-to-line rated VTs connected line to ground. This setup, however, does not eliminate the problem. To completely suppress ferroresonance, applying resistance loading across each phase of the secondary winding is necessary. Resistance loading equal to the rated thermal capability of the VT may be required to suppress ferroresonance. This resistance loading should be applied to the VT secondaries when the VT is to be operated on an ungrounded system. This load would be removed when the generator is connected and the system grounding reestablished.

12.5.5.12 Protection during startup or shutdown

During startup or shutdown of a generator, the unit may be operated at reduced and/or decreasing frequency with field applied for a period of time. When operating frequency

 Copyright © 2001 IEEE. All rights reserved.

Copyright The Institute of Electrical and Electronics Engineers, Inc.
Provided by IHS under license with IEEE
No reproduction or networking permitted without license from IHS Not for Resale

decreases below rated, the sensitivity of some of the generator zone protective relays may be adversely affected. The sensitivity of a few relays may be only slightly reduced while other relays may not provide adequate protection or become inoperative. Figure 12-36 shows the effects of frequency on the pickup of electromechanical relays, which may be used in the generator zone. Some relays lose sensitivity rapidly below 60 Hz. Induction disk current relays could provide adequate protection down to 20 Hz while plunger relays are not adversely affected by off-frequency operation. Static relays have various frequency response characteristics. The specific effect of off-frequency operation should be checked with the manufacturer.

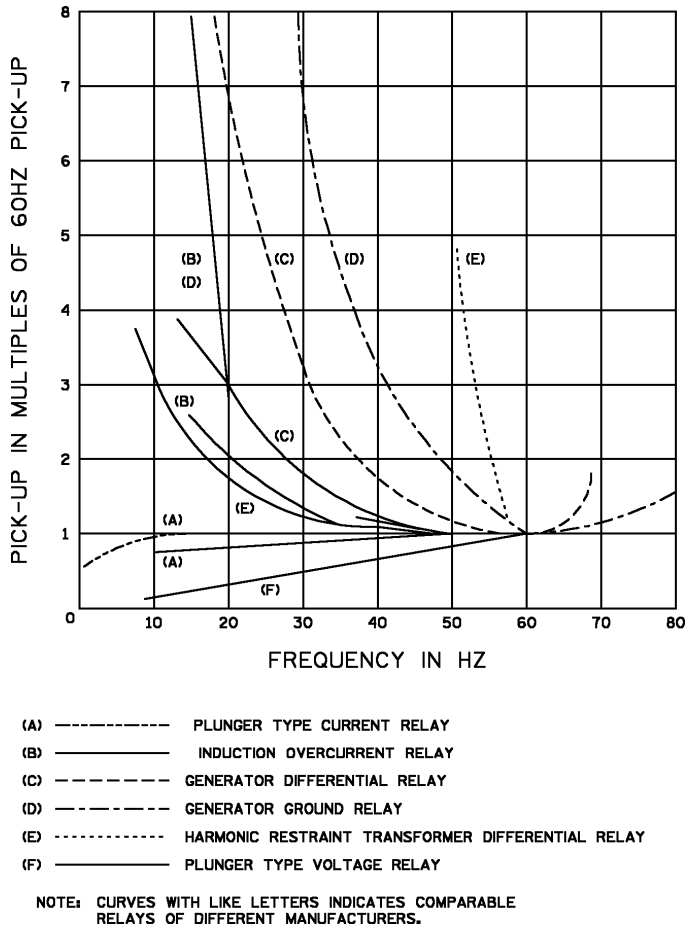

Figure 12-36—Relay pickup versus frequency

Supplementary protection during startup or shutdown of a generator can be provided through the use of protective relays whose pickup is not affected by frequency, such as instantaneous overcurrent or plunger voltage relays. In general, this protection would be placed in service only when the generator is disconnected from the system. A cut-off contact may be required to remove the relay from service to avoid exceeding the thermal rating of the relay.

Copyright © 2001 IEEE. All rights reserved.

Copyright The Institute of Electrical and Electronics Engineers, Inc.
Provided by IHS under license with IEEE
No reproduction or networking permitted without license from IHS
Not for Resale

When generators are bused at their terminals, supplemental ground protection could be provided by using a sensitive instantaneous overcurrent relay in series with the time-overcurrent relay normally used for protection. These relays are connected to CTs located on the neutral end of the machine phase winding.

Supplemental phase-fault protection could be provided by placing an instantaneous relay in the CT phase leads. The current coils of both the phase and ground instantaneous overcurrent relays need to be short circuited when the machine is connected to the system if both relays could be picked up continuously.

For a unit generator-transformer arrangement, supplementary ground-fault protection can be provided by using a plunger voltage relay connected in parallel with the normal ground overvoltage protection. Relays with a pickup range of below 10 V would be desirable for this purpose. Supplementary phase-fault protection can be provided by using plunger instantaneous overcurrent relays placed in series with the operate circuits of the transformer differential relay. The instantaneous phase overcurrent relay would be set above the difference current that flows in the differential circuit during normal 60 Hz operation to avoid damage due to continuous operation in the picked-up position. In general, the difference current is small, and in most instances setting the instantaneous overcurrent relay at its minimum pickup setting is possible. The instantaneous overcurrent relay current coil is in the differential circuit at all times and presents additional burden to the CTs. The ratio error of the CTs should be checked to ensure proper transformer differential relay operation.

The supplementary protection for both types of generator arrangements is usually deactivated when the units are connected to the system. This deactivation can be accomplished by opening the trip circuits with a breaker “b” switch, directional or voltage-sensing relay, or an underfrequency relay.

12.5.5.13 Inadvertent energizing

Inadvertent or accidental energizing of off-line generators has occurred often enough to warrant installation of dedicated protection to detect this condition. A number of generators have been damaged or completely destroyed due to inadvertent energization. Operating errors, breaker head flashovers, control circuit malfunctions, or a combination of these events have caused generators to be accidentally energized while off line. This subclause discusses the problem of inadvertent generator energization, the limitations of conventional generator protection to detect this condition, and the use of dedicated inadvertent energizing protection schemes.

When a generator on turning gear is energized from the power system, it accelerates like an induction motor. The generator terminal voltage and the current are a function of the generator, transformer, and system impedances. Depending on the system, this current can be as high as 3 per unit to 5 per unit and as low as 1 per unit to 2 per unit of the machine rating. While the machine is accelerating, high currents induced into the rotor can cause significant damage in only a matter of seconds.

 Copyright © 2001 IEEE. All rights reserved.

--`,,`-`-`,,`,,`,`,,`---

Copyright The Institute of Electrical and Electronics Engineers, Inc.
Provided by IHS under license with IEEE
No reproduction or networking permitted without license from IHS Not for Resale

12.5.5.13.1 Normally available relays

The normal relay complement for generator protection has serious limitations when trying to detect inadvertent energizing. Specifically, the following relays cannot be relied on to protect the generator for all inadvertent energizing conditions:

— Loss-of-excitation relays
— Reverse-power relays
— System backup relays
— Negative-sequence relays

12.5.5.13.2 Dedicated protection schemes

Unlike conventional schemes, which provide protection when the generator is on line, dedicated protection schemes are designed to protect the generator when it is off line. Great care is required to ensure that dc tripping power and input quantities are not removed when the generator is off line. Consideration should be given to locating this protection where it is less likely to be disabled during generator maintenance.

Relays that are voltage dependent are disabled if the standard procedure is to remove VT fuses when the machine is off line. For reverse-power relays, with the potential applied, a voltage drop of 50% or more usually renders them inoperative. Relays with intentional time delay for coordination are too slow to provide any substantial protection for inadvertent energization.

When assessing whether a relay provides adequate protection, determining its status when the generator is off line is necessary. Numerous cases have been reported where all of the generator protection was inoperative when the machine was accidentally energized.

Common schemes used to detect inadvertent energizing are

— Directional overcurrent relays
— Frequency-supervised overcurrent
— Distance relay scheme
— Voltage-supervised overcurrent
— Auxiliary contacts scheme with overcurrent relays

For information on the application of these relays for inadvertent energization protection, see IEEE Std C37.102-1993.

12.5.5.13.3 Summary recommendations

Inadvertent energization protection was added to alert protection engineers to the real and devastating consequences of inadvertently energizing a generator. Conventional generator protection schemes are typically insensitive or so slow to operate that they do not prevent the generator and prime mover from being damaged. Therefore, it is recommended that some form of dedicated inadvertent energizing scheme be used as part of an overall generator

Copyright © 2001 IEEE. All rights reserved.

Copyright The Institute of Electrical and Electronics Engineers, Inc.
Provided by IHS under license with IEEE
No reproduction or networking permitted without license from IHS
Not for Resale

protection package. This scheme should be isolated so that there is good assurance that it will not be disabled during plant shutdown or maintenance.

12.5.5.14 Transmission-line reclosing near generating stations

Switching operations involving the opening and closing of circuit breakers at or near a generating station can produce transient power and current oscillations, which can stress or damage turbine generators. Of particular concern are the switching operations that produce torsional oscillations and shaft torques, which may cause major shaft fatigue damage in one or relatively few incidents of severe switching disturbances. The switching disturbances of primary concern are

— Steady-state switching of lines
— High-speed reclosing of circuit breakers following transmission-line faults

12.5.5.14.1 Steady-state switching of lines

The switching of lines near a generating station for maintenance can produce a step change in power, which can result in transient mechanical forces on both the rotating and stationary components of a turbine generator. This sudden change in power is a function of the switching angle across an open circuit breaker and the system impedance. If this change in power exceeds 0.5 per unit, the turbine-generator manufacturer should be consulted in order to determine whether potential exists for significant damage.

12.5.5.14.2 High-speed reclosing following system faults

High-speed reclosing of transmission lines at or near a generating station following a fault has the potential for causing major shaft fatigue damage to a turbine generator. Of particular concern is the possibility of an unsuccessful reclosure into a persistent fault, which may reinforce the torsional oscillations and shaft torques caused by the original disturbance and thereby cause a significant loss in fatigue life of turbine-generator shafts.

In order to minimize the potential detrimental effects of high-speed reclosing of transmission lines near generating stations, alternative reclosing practices should be investigated as a means for reducing fatigue duty.

12.5.5.15 Synchronizing

Improper synchronizing of a generator to a system can result in damage to any type of generating unit. The damage incurred can be slipped couplings, increased shaft vibration, a change in bearing alignment, loosened stator windings, loosened stator laminations, and fatigue damage to shafts and other mechanical parts.

In order to avoid damaging a generator during synchronizing, the generator manufacturer generally provides synchronizing limits in terms of breaker-closing angle and voltage matching. Typical limits include the following:

Copyright © 2001 IEEE. All rights reserved.

--`,,`-`-`,,`,,`,`,,`---

Copyright The Institute of Electrical and Electronics Engineers, Inc.
Provided by IHS under license with IEEE
No reproduction or networking permitted without license from IHS Not for Resale

a) *Breaker-closing angle: within 10 electrical degrees*. The closing of the circuit breaker should ideally take place when the generator and the grid are at 0° phase angle with respect to each other. To achieve this result, the breaker must be closed enough in advance of the point of phase-angle coincidence to account for the breaker-closing time. This is mathematically expressed as

$$\Phi A = 360(F_S)(T_S)$$

where

ΦA is the advance angle (°),
F_S is the slip frequency (Hz),
T_S is the breaker closing time (s).

b) *Voltage matching: 0% to +5%*. The voltage difference should be minimized and not exceed 5%. This limit aids in maintaining system stability by ensuring some var flow into the system. Additionally, if the generator voltage is excessively lower than the grid when the breaker is closed, sensitively set reverse-power relays may trip.

c) *Frequency difference: less than 0.067 Hz*. The frequency difference should be minimized to the practical control and response limitations of the given prime mover. A large frequency difference causes rapid load pickup or excessive motoring of the machine. This effect manifests itself both as power swings on the system and as mechanical torques on the machine. Additionally, if the machine is motored, sensitively set reverse-power relays may trip.

Slip frequency limits applied for certain machine types are based on the ruggedness of the turbine generator under consideration and the controllability of the turbine generator.

The synchronizing approaches used to minimize the possibility of damaging a generator include

— Automatic synchronizing
— Semiautomatic synchronizing
— Manual synchronizing

12.5.5.15.1 Automatic synchronizing system

Complete automatic synchronizing includes an integrated combination of elements that monitor voltage magnitude, phase angle, and rate of change of the phase angle across a controlled circuit breaker. It takes into account the closing time of the controlled breaker to predict when to initiate closing. This system includes an automatic synchronizer and elements (e.g., relays or modules) to monitor and control the frequency and voltage of the generator.

The synchronizing relay measures the speed of the generator relative to the system, measures the phase angle between the generator and the system, and then gives a closing impulse to the

Copyright © 2001 IEEE. All rights reserved.

Copyright The Institute of Electrical and Electronics Engineers, Inc.
Provided by IHS under license with IEEE
No reproduction or networking permitted without license from IHS
Not for Resale

breaker at the correct angle in advance of synchronism to ensure that the breaker poles close when the machine and system are in phase.

The speed-matching relay is used to automatically match a generator frequency to a system frequency. To accomplish this match, the relay produces signals that can be used to raise or lower generator speed. In general, for synchronization, generator speed is adjusted to be slightly higher than system frequency to prevent motoring or tripping on reverse power. Sync-check relays are often applied with automatic synchronizers to supervise the automatic control function.

12.5.5.15.2 Manual and semiautomatic synchronizing system

The manual synchronizing system relies on the operator's judgement for breaker closure while controlling generator voltage and frequency. The information required for the operator to make a closing decision is provided by a group of instruments. The operator's action may be supervised by additional devices, which are transparent to the operator, i.e., the devices act as permissive only and do not match speed and voltage or initiate closure.

The semi-automatic synchronizing system has aspects of both the manual and the automatic systems in that the operator has supervision of the automatic device and may directly control the generator speed and voltage. The relay used to perform the supervisory function is a sync-check relay.

12.5.6 Tripping schemes

12.5.6.1 Protection philosophy

Once the task of selecting the desired array of protective relays for the generator has been completed, then decisions must be made that determine how the prime mover-generator set is to be shut down. This determination should consider more than simply disconnecting the generator from the electrical system. The basic operations in initiating shutdown of a prime mover-generator set are as follows:

a) Trip the generator breaker.
b) Open the excitation source (i.e., trip the field breaker).
c) Remove the prime mover energy source (i.e., close the throttle valve).
d) Initiate an alarm.

The precise manner in which these operations are accomplished is dependent on many factors:

— Reasons for tripping
— Type of prime mover (e.g., diesel or gas engine, gas turbine, steam turbine, waterwheel)
— Impact of the sudden loss of output power on the electrical system and the process that it serves
— Environmental considerations (if any)

 Copyright © 2001 IEEE. All rights reserved.

Copyright The Institute of Electrical and Electronics Engineers, Inc.
Provided by IHS under license with IEEE
No reproduction or networking permitted without license from IHS Not for Resale

— Safety to personnel
— Operating experience that focuses on a specific problem requiring special consideration

12.5.6.2 Tripping modes

Table 12-3 provides guidance in developing trip logic for the protective devices referred to in this chapter. It should serve as a basis for generator protection logic. Individual trip logic varies depending upon the owner's preference and the abilities of the prime mover and its supply system.

The arrangement of the lockout and tripping relays should provide redundancy in both trip paths and trip functions so that backup relays trip a separate lockout relay from the primary protection. Four methods for isolating the generator following electrical and abnormal operating conditions are common:

a) *Simultaneous tripping*. In the simultaneous tripping mode, the protective relays isolate the generator by tripping the generator breakers, tripping field breaker, and shutting down the prime mover by closing the turbine valves, all at the same time. This mode is used for all internal generator faults and severe abnormalities in the generator protection zone. Auxiliary loads are transferred to a standby source. In some instances, a time delay is used in the breaker tripping chain if a potential exists for significant overspeed of the unit. If time delay is used, the effect of this delay on the generator and/or system should be determined.
b) *Generator tripping*. In the generator tripping mode, the protective relays trip the main generator breakers and the field breaker. This mode trips the generator for power system disturbances. This mode does not shut down the prime mover and is used where it may be possible to correct the abnormality quickly and thereby reconnect the machine to the system in a short time. This tripping mode may not be possible with some types of prime movers, governors, and boiler systems that are not capable of a quick response following a load rejection. In these instances, shutting down the prime mover is necessary for all faults and abnormal operating conditions.
c) *Unit separation tripping*. The unit separation mode is a variation of generator tripping mode where only the main generator breaker is tripped. This mode is used when maintaining the unit auxiliary loads connected to the generator is desirable. The advantage of this mode is that the generator can be reconnected to the system with minimum delay. The same precautions described for generator tripping mode apply.
d) *Sequential tripping*. In the sequential tripping mode, the turbine valves are tripped first. When the turbine control system indicates that the turbine has tripped, tripping of the main generator breakers and the field breakers is initiated. This mode is primarily used for steam turbines when delayed tripping has no detrimental effect on the generator. The inclusion of a reverse-power relay in series with a mechanical signal indicating that the turbine has been tripped provides security against possible overspeed by ensuring that steam flows have been reduced below the amount necessary to produce an overspeeding condition before the generator circuit breakers are tripped. The reverse-power relay time delay could be as low as 3 s for this application. If time delay is used, the effect of this delay on the generator and/or

Copyright © 2001 IEEE. All rights reserved.

--`,,`-`-`,,`,,`,`,,`---

Copyright The Institute of Electrical and Electronics Engineers, Inc.
Provided by IHS under license with IEEE
No reproduction or networking permitted without license from IHS
Not for Resale

Table 12-3—Trip logic table

Device	Simultaneous trip	Generator trip	Unit separation trip	Sequential trip	Alarm only
Prime mover	X			1	
Generator breaker	X	X	X	2	
Field breaker	X	X		3	
Transfer auxiliaries	X	X		3	
21 or 51V	NOTE 1		NOTE 1		
24		X			
32	X				
40		X			
46		X			
49					X
50/51	X				
51GN	X				
53		X			
59	NOTE 2				X
59GN	X				
60					X
64F		X			
78			X		
81			X		
87G	X				
87GN	X				
87U	X				

NOTES
1—If 21/51V is used as primary protection, use simultaneous trip method. If used as backup, use unit separation trip method.
2—Device 59 should initiate a simultaneous trip at hydro units. Thermal units only need to be alarmed.

Copyright © 2001 IEEE. All rights reserved.

Copyright The Institute of Electrical and Electronics Engineers, Inc.
Provided by IHS under license with IEEE
No reproduction or networking permitted without license from IHS
Not for Resale

system should be determined. If this approach is used, backup protection, in the form of motoring protection, should be provided to ensure the generator main and field breakers are tripped if the sequential trip signal fails.

This protection should not override the generator switchyard protection that instantaneously opens the generator breaker when a critical electrical fault occurs that might cause serious and certain damage to the generator or switchyard equipment.

12.5.7 Recommended protection schemes

The recommended protection schemes for generators are given by machine sizes.

a) Small (i.e., 1000 kVA maximum up to 600 V; 500 kVA maximum above 600 V)
b) Medium (i.e., from small machine sizes up to 12 500 kVA regardless of voltage)
c) Large (i.e., from medium machine sizes up to approximately 50 000 kVA)

Any recommendation based entirely on machine size is not entirely adequate. The importance of the machine to the system or process that it serves and the reliability required from the generator are important factors in the selection of the protective devices for the generator.

12.5.7.1 Small generators

The basic minimum protection for a single-isolated machine, as shown in View (a) of Figure 12-37, consists of the following devices:

— Device 51V, backup overcurrent relay (either voltage-restrained or voltage-controlled)
— Device 51G, backup ground time-overcurrent relay

Additional protection that should be considered for multiple machines on an isolated system, as shown in View (b) of Figure 12-37, are as follows:

— Device 32, reverse-power relay for antimotoring protection
— Device 40, reverse var relay for loss-of-field protection
— Device 87, instantaneous overcurrent relays providing self-balance differential protection

For generators having excitation systems that do not have the ability to sustain the short-circuit current, even the basic minimum recommendations do not apply. These machines are typically single-isolated units having very small kilovoltampere ratings.

12.5.7.2 Medium generators

The basic minimum protection for machines rated up to 12 500 kVA, as shown in Figure 12-38 consists of the following devices:

Copyright © 2001 IEEE. All rights reserved.

Copyright The Institute of Electrical and Electronics Engineers, Inc.
Provided by IHS under license with IEEE
No reproduction or networking permitted without license from IHS
Not for Resale

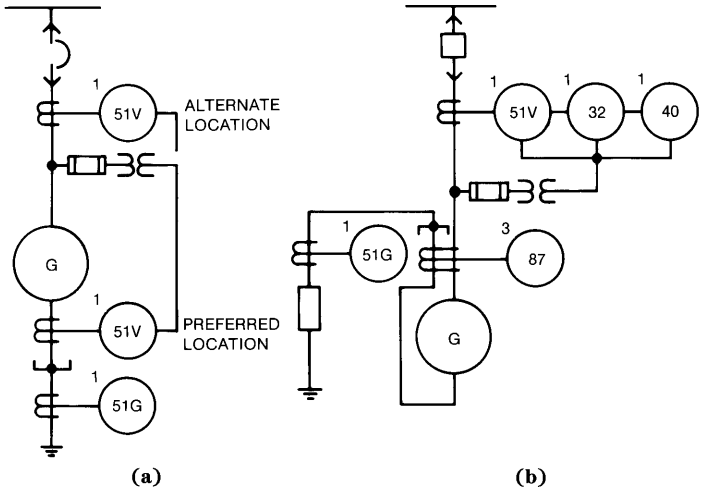

a) Single-isolated generator on low-voltage system
b) Multiple-isolated generator on medium-voltage system

Figure 12-37—Typical protective relaying scheme for small generators

— Device 51V, backup overcurrent relays (either voltage-restrained or voltage-controlled)
— Device 51G, backup ground time-overcurrent relay
— Device 87, differential relays (either fixed- or variable-percentage; standard-speed, high-speed, or self-balance, when applicable)
— Device 32, reverse-power relay for antimotoring protection
— Device 40, impedance relay (i.e., offset mho) for loss-of-field protection (single element
— Device 46, negative-phase-sequence overcurrent relay for protection against unbalanced conditions
— Device 64F, generator field ground relay

12.5.7.3 Large generators

The recommended protection for the large industrial service generators is shown in Figure 12-39 and described as follows:

— Device 51V, backup overcurrent relays (either voltage-restrained or voltage-controlled)
— Device 51G, backup ground time-overcurrent relay
— Device 87, differential relays (i.e., high-speed variable-percentage)
— Device 87G, ground differential relay (i.e., directional product)
— Device 40, impedance relay (i.e., offset mho) for loss-of-field protection (two element for greater sensitivity)
— Device 46, negative-phase-sequence overcurrent relay for protection against unbalanced conditions

Copyright © 2001 IEEE. All rights reserved.

--`,,`-`-`,,`,,`,`,,`---
Copyright The Institute of Electrical and Electronics Engineers, Inc.
Provided by IHS under license with IEEE
No reproduction or networking permitted without license from IHS
Not for Resale

— Device 49, temperature relay to monitor stator winding temperature
— Device 64F, generator field ground relay
— Device 60, voltage-balance relay)

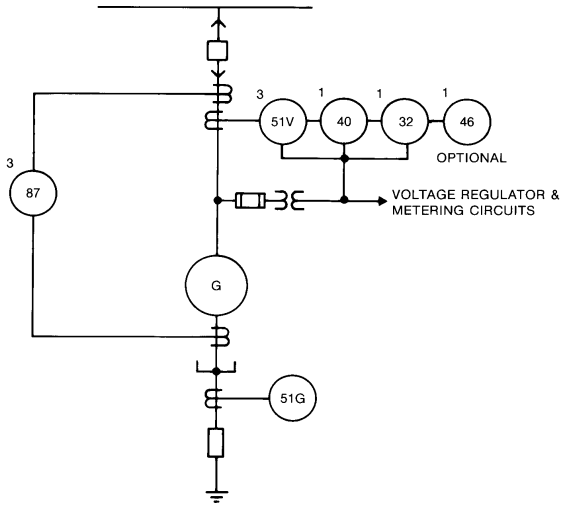

Figure 12-38—Typical protective relaying scheme for medium generators

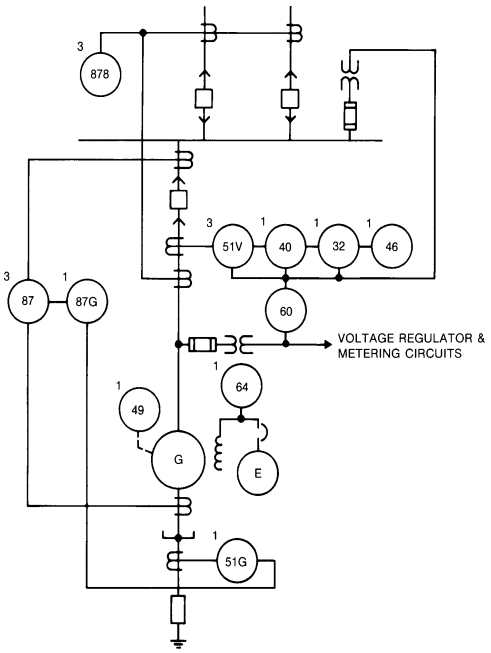

Figure 12-39—Typical protective relaying scheme for large generators

Copyright © 2001 IEEE. All rights reserved.

Copyright The Institute of Electrical and Electronics Engineers, Inc.
Provided by IHS under license with IEEE
No reproduction or networking permitted without license from IHS
Not for Resale

Figure 12-39 shows the bus potential transformers being used to supply potential to the generator relays. This application is acceptable providing that circuitry is provided to disconnect the relay potential when the generator is out of service. The preferred arrangement is to provide two sets of potential transformers at the generator terminals.

The bus differential relays (Device 87B), shown in Figure 12-39, are recommended when the large generators are connected to the system. Although they are not a part of the generator protection scheme, they provide high-speed clearing of bus faults; therefore, the generator backup overcurrent relays are not required to perform this primary protective function. This setup greatly improves the level of protection and reduces the thermal stresses that would otherwise be imposed on the generator and its components.

12.6 References

This recommended practice shall be used in conjunction with the following standards. When the following standards are superseded by an approved revision, the revision shall apply.

ANSI C50.13-1989, American National Standard Requirements for Cylindrical Rotor Synchronous Generators.[2]

IEEE Std 67-1990 (Reaff 1995), IEEE Guide for Operation and Maintenance of Turbine Generators.[3]

IEEE Std C37.101-1993, IEEE Guide for Generator Ground Protection.

IEEE Std C37.102-1995, IEEE Guide for AC Generator Protection.

IEEE Std C62.92-1989, IEEE Guide for the Application of Neutral Grounding in Electrical Utility Systems.

12.7 Bibliography

[B1] ANSI C50.14-1977, American National Standard Requirements for Combustion Gas Turbine Driven Cylindrical Rotor Synchronous Generators.

[B2] *Applied Protective Relaying*. Newark, N.J.: Westinghouse Electric Corporation, 1976.

[B3] Baker, D. S., "Generator Backup Overcurrent Protection," *IEEE Transactions on Industry Applications*, vol. IA-18, pp. 632–640, Nov./Dec. 1982.

[2]ANSI publications are available from the Sales Department, American National Standards Institute, 11 West 42nd Street, 13th Floor, New York, NY 10036, USA (http://www.ansi.org/).

[3]IEEE publications are available from the Institute of Electrical and Electronics Engineers, 445 Hoes Lane, P.O. Box 1331, Piscataway, NJ 08855-1331, USA (http://standards.ieee.org/).

 Copyright © 2001 IEEE. All rights reserved.

Copyright The Institute of Electrical and Electronics Engineers, Inc.
Provided by IHS under license with IEEE
No reproduction or networking permitted without license from IHS Not for Resale

[B4] Barkle, J. E., and Glassburn, W. E., "Protection of Generators Against Unbalanced Currents," *AIEE Transactions*, vol. 72, pt. 111, pp. 282–285, Apr. 1953.

[B5] Berdy, J., "Loss of Excitation Protection for Modern Synchronous Generators," *IEEE Transactions on Power Apparatus and Systems*, vol. PAS-94, pp. 1457–1463, Sept./Oct. 1975.

[B6] Blackburn, J. L., *Protective Relaying, Principles and Applications*, 2nd ed. New York: Marcel Decker, Inc., 1998.

[B7] Brown, P. G., Johnson, I. E., and Stevenson, J. R., "Generator Neutral Grounding," *IEEE Transactions on Power Apparatus and Systems*, vol. PAS-97, pp. 683–684, May/June 1978.

[B8] *Electrical Transmission and Distribution Reference Book*, Pennsylvania: Westinghouse Electric Corporation, Central Station Engineers, 1964.

[B9] Graham, D. J., Brown, P. G., and Winchester, R. L., "Generator Protection with a New Static Negative-Sequence Relay," *IEEE Transactions on Power Apparatus and Systems*, vol. PAS-94, pp. 1209–1213, July/Aug. 1975.

[B10] Gross, E. T. B., and Le Vesconte, L. B., "Backup Protection for Generators," *AIEE Transactions*, pt. 111-A, pp. 585–589, June 1953.

[B11] Higgins, T. A., Hally, H. J., and Wall L. A., "Generator Representation and Characteristics for Three Phase Faults," Georgia Institute of Technology, 1989.

[B12] IEEE Committee Report, "Bibliography of Relay Literature, 1974-1975," *IEEE Transactions on Power Apparatus and Systems*, vol. PAS-97, pp. 789–801, May/June 1978.

[B13] IEEE Std 387-1984, IEEE Standard Criteria for Diesel-Generator Units Applied as Standby Power Supplies for Nuclear Power Generating Stations.

[B14] IEEE Std C37.2-1991, IEEE Standard Electrical Power System Device Function Numbers.

[B15] Kelly, A. R., "Allowing for Decrement and Fault Voltage in Industrial Relaying, I," *IEEE Transactions on Industry and General Applications*, vol. IGA-1, pp. 130–139, Mar./Apr. 1965.

[B16] *Loss-of-Excitation Protection for Synchronous Generators*, General Electric, publication GER-3183, 1980.

[B17] Mason, C. R., *The Art and Science of Protective Relaying*. New York: John Wiley & Sons, 1956. Reprinted by General Electric Company, GER-3738.

[B18] McFadden, R. H., "Grounding of Generators Connected to Industrial Plant Buses," *IEEE Transactions on Industry Applications*, vol. IA-17, pp. 553–556, Nov./Dec. 1981.

Copyright © 2001 IEEE. All rights reserved.

--`,,`-`-`,,`,,`,`,,`---

Copyright The Institute of Electrical and Electronics Engineers, Inc.
Provided by IHS under license with IEEE
No reproduction or networking permitted without license from IHS
Not for Resale

[B19] NEMA MG 1-1998, Motors and Generators: Part 22, Large Generators.[4]

[B20] Powell, L. J., Jr., "Influence of Third-Harmonic Circulating Currents in Selecting Neutral Grounding Devices," *IEEE Transactions on Industry Applications*, vol. IA-9, pp. 672–679, Nov./Dec. 1973.

[B21] Rajk, M. N., "Ground Fault Protection of Unit Connected Generators," *AIEE Transactions*, vol. 77, pt. 111, pp. 1082–1093, Dec. 1958.

[B22] St. Pierre, C. R., "Impact Loading of Isolated Generators," *IEEE Transactions on Industry Applications*, vol. IA-17, pp. 557–566, Nov./Dec. 1981.

[B23] St. Pierre, C. R., "Loss-of-Excitation Protection for Synchronous Generators on Isolated Systems," *IEEE Transactions on Industry Applications*, vol. IA-21, pp. 81–98, Jan./Feb. 1985.

[4]NEMA publications are available from Global Engineering Documents, 15 Inverness Way East, Englewood, CO 80112, USA (http://global.ihs.com/).

 Copyright © 2001 IEEE. All rights reserved.

Copyright The Institute of Electrical and Electronics Engineers, Inc.
Provided by IHS under license with IEEE
No reproduction or networking permitted without license from IHS Not for Resale

Chapter 13
Bus and switchgear protection

13.1 General discussion

The substation bus and switchgear are the parts of the power system used to direct the flow of power to various feeders and to isolate apparatus and circuits from the power system. These parts include the bus bars, circuit breakers, fuses, disconnection devices, current transformers (CTs), voltage transformers (VTs), and the structure on or in which they are mounted. The term *bus* refers to the bus within an assembly of equipment [e.g., medium-voltage, metal-enclosed switchgear, medium-voltage control, low-voltage switchgear, power switchboards, panelboards, motor control centers (MCCs), bus duct].

To isolate bus faults, all power source circuits connected to the bus are opened electrically by circuit breakers responding to relay action, by direct-acting trip devices on low-voltage circuit breakers, or by fuses. This disconnection shuts down all loads and associated processes supplied by the bus and may affect other parts of the power system.

In view of the system downtime resulting from a bus fault, the equipment should be designed to be as nearly fault proof as practicable. For example, the use of metal-clad switchgear enhances reliability because the enclosure protects the bus from direct lightning strokes. Medium-voltage metal-clad switchgear uses insulated bus bars as standard. Such bus bars reduce accidental faults caused by foreign objects or rodents. Using metal-enclosed bus duct or insulated cable not directly exposed to lightning contributes to reliability.

To further reduce the occurrence of faults, the bus and associated equipment should be installed in a location where they are least subjected to deteriorating environmental conditions. A preventive maintenance program is essential to detect deterioration, to make repairs, and to check and test relay performance before a fault occurs (see Killin [B4][1]).

Regardless of the steps taken to avoid bus faults, such faults occasionally occur. High-speed protective relaying or appropriately rated fuses should be used to minimize fault duration. Shorter faults limit damage and mitigate the effects on other parts of the power system. Providing proper bus protection requires a well-designed system. Each equipment assembly should be provided with a main protective device for each power source, either as an integral part of the assembly or in a remote location. If the main protective device is omitted in an assembly and provided by an upstream device, the installation may be acceptable if coordinated protection is provided. The main circuit breaker sometimes is omitted at the secondary of a power transformer that is protected on the primary. This setup reduces the effectiveness of secondary bus protection because the transformer reduces the sensitivity of the primary protection for secondary faults.

[1]The numbers in brackets preceded by the letter B correspond to those of the bibliography 13.10.

Copyright © 2001 IEEE. All rights reserved.

Copyright The Institute of Electrical and Electronics Engineers, Inc.
Provided by IHS under license with IEEE
No reproduction or networking permitted without license from IHS
Not for Resale

When industrial power systems are grounded through a resistance or reactance to limit fault damage, the short-circuit current available to detect a ground fault is small and requires sensitive protective relaying. Furthermore, a delta-wye transformer connection essentially isolates the primary device from ground faults, especially when the wye connection is low-resistance-grounded. In this case, providing sensitive ground-fault relaying is important to initiate the opening of all sources that can feed the fault (see Chapter 8).

When supplementary bus differential protective relaying is used, it is essential that it operate only for bus or switchgear faults. False tripping on external faults is unacceptable.

13.2 Types of buses and arrangements

The substation bus may have many different arrangements depending on the requirements for continuity of service requirements for the bus and essential feeders supplied from the bus. Refer to IEEE Std C37.97-1979.[2] The methods of protecting substation buses and switchgear vary depending on voltage and the arrangement of the buses. The bus arrangements most applicable to industrial power systems are shown in Figure 13-1, Figure 13-2, Figure 13-3, and Figure 13-4. A simple radial system is similar to Figure 13-1 except with only one utility line and supply transformer.

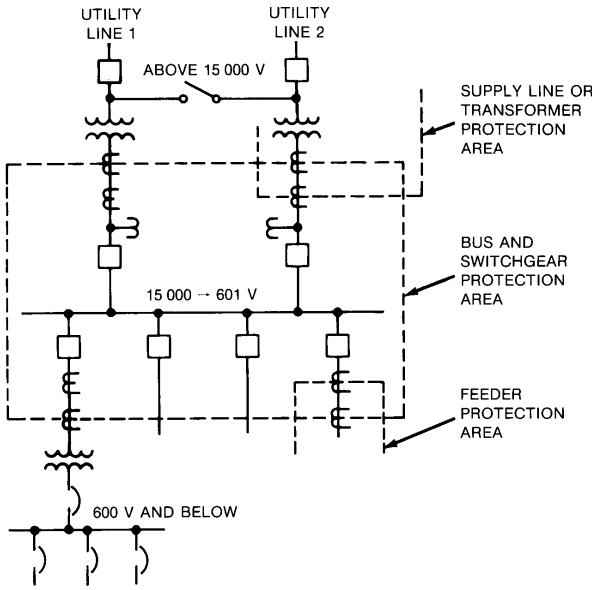

Figure 13-1—Single-bus scheme with bus differential relaying

Industrial power system voltages fall into three categories: above 15 000 V, from 15 000 V to 601 V, and at or below 600 V. The industrial power system usually includes only any distribution bus 15 000 V and below. However, it may include the distribution, subtransmission, or

[2]Information on references can be found in 13.9.

Copyright © 2001 IEEE. All rights reserved.

Copyright The Institute of Electrical and Electronics Engineers, Inc.
Provided by IHS under license with IEEE
No reproduction or networking permitted without license from IHS
Not for Resale

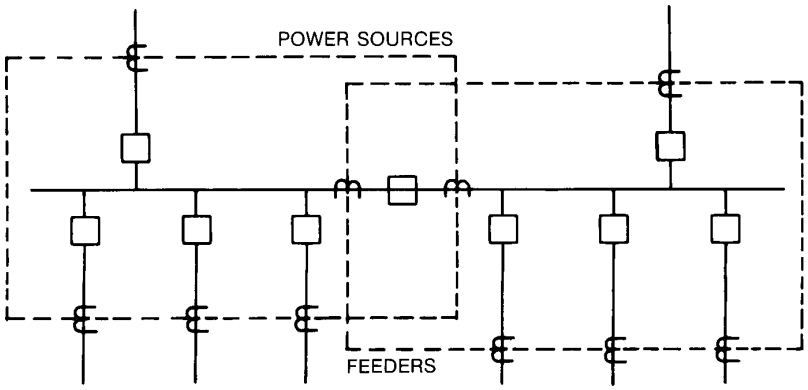

Figure 13-2—Sectionalized-bus scheme with bus differential relaying

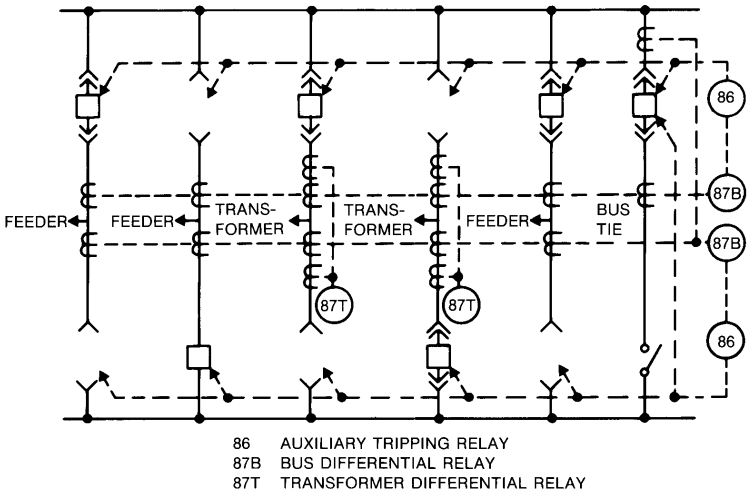

Figure 13-3—Double-bus scheme with bus differential relay

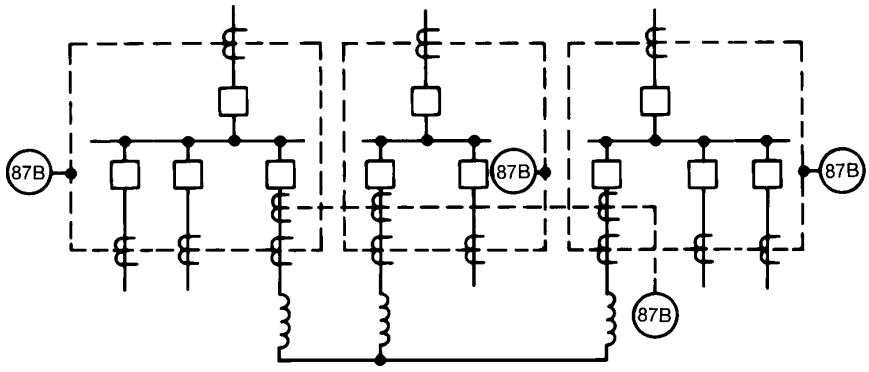

Figure 13-4—Synchronizing-bus scheme with bus differential relaying

Copyright © 2001 IEEE. All rights reserved.

Copyright The Institute of Electrical and Electronics Engineers, Inc.
Provided by IHS under license with IEEE
No reproduction or networking permitted without license from IHS
Not for Resale

transmission substation bus at a higher voltage level possibly up to about 35 kV. Bus protective relaying at this level may create a panel space problem in sections of equipment supplied by the electric utility. Usually the industrial facility provides the high-voltage bus relaying. Compliance with utility practice is mandatory in most cases. Chapter 14 gives further information on utility service supply-line requirements. (See also Beckmann, et al. [B1])

13.3 Bus overcurrent protection

Most systems are radial, and overcurrent protection on each incoming power source circuit can provide adequate bus protection.

On medium- and high-voltage systems, fuses or overcurrent relays that trip circuit breakers are used. They are supplemented with sensitive ground relays when the system is low-resistance-grounded. Chapter 4 of this recommended practice gives details on relays and procedures for proper settings; Chapter 5 and Chapter 6 cover fuse application; and Chapter 8 covers ground-fault protection.

On low-voltage systems, most applications use circuit breakers or fuses. The introduction of electronic trip units for low-voltage circuit breakers to perform the sensing and timing functions provided significant improvements in the quality of protection for low-voltage circuits and apparatus. Chapter 7 describes how to use low-voltage circuit breakers to their best advantage. Chapter 5 covers low-voltage fuse application.

Separate circuitry detects ground faults at much lower levels and clears them much faster than is possible with direct-acting electromechanical phase-overcurrent devices alone. Electronic trip units are available with integral sensitive ground elements. The National Electrical Code® (NEC®) (NFPA 70-1999) requires ground-fault protection on solidly grounded wye-connected electric services of more than 150 V to ground, but not exceeding 600 V phase to phase, for the following devices:

a) Any service-disconnecting means rated 1000 A or more (see Article 230-95)
b) Any feeder disconnect rated 1000 A or more (see Article 215-10)
c) Each building or structure main disconnecting means rated 1000 A or more (see Article 240-13)

Overcurrent relays and trip devices should have time-delay and high-current settings to prevent opening the source circuit breakers upon the occurrence of a feeder fault. As a result, they cannot provide sensitive high-speed bus and switchgear protection.

An inverse or definite time-overcurrent relay connected to a CT in the power transformer neutral-to-ground circuit provides good sensitivity for ground faults. It should be set to be selective for feeder faults. If the feeders have ground-sensor instantaneous protection, only a short-time delay is needed on the relay in the transformer grounding circuit. Because most faults are ground faults or eventually become ground faults, good ground-fault protection greatly improves bus overcurrent protection.

 Copyright © 2001 IEEE. All rights reserved.

Copyright The Institute of Electrical and Electronics Engineers, Inc.
Provided by IHS under license with IEEE
No reproduction or networking permitted without license from IHS Not for Resale

13.4 Medium- and high-voltage bus differential protection

Bus differential relaying can provide high-speed, sensitive, improved protection and selectivity for buses and switchgear. It is sometimes used in addition to overcurrent protection and permits complete overlapping with the other power system relaying as indicated in Figure 13-1, Figure 13-2, Figure 13-3, and Figure 13-4. Bus differential relaying normally is applied to more complex systems, which have multiple sources and perhaps multiple buses at the same voltage level. The principle reason for selecting such protection is to ensure protective device coordination that de-energizes the bus only when absolutely necessary. This goal justifies the extra cost of high-speed bus differential relaying.

The basic principle is that under normal conditions the phasor sum of all measured currents entering and leaving the bus should be zero. Otherwise, a fault has occured within the protected zone. Where justified, ground-fault differential relaying should be added to the medium-voltage wye-connected source transformer for the bus. This addition provides relatively inexpensive selective protection using standard transformers and an auxiliary CT connection.

Differential relaying is provided to supplement overcurrent protection. It is frequently used on a 15 kV bus, sometimes on a 5 kV bus, and rarely on any low-voltage bus. The following factors determine whether this relaying should be provided (see Cable, et al. [B2]):

a) *Degree of exposure to faults*. For example, open outdoor buses have a high degree of exposure; and metal-clad switchgear, properly installed and in a clean environment, have minimum exposure. Contaminated environments increase the possibilities of faults, and equipment located in these environments needs better protection.

b) *Power system stability*. The capability of a system to return to a stable, steady-state mode of operation after a system disturbance may require high-speed bus differential relaying. The faster clearing time obtained with high-speed differential relaying enhances the probability of maintaining stability for the duration of a fault.

c) *Use of sectionalized bus arrangements*. Sectionalized bus arrangements make differential protection more useful and desirable, particularly when secondary-selective distribution systems are used. The faulted bus can be isolated quickly and continuity of service maintained to a portion of the load served by any other bus.

d) *Effects of bus failure on other parts of the power system and associated processes*. If a long scheduled outage period for repairs can be tolerated, differential protection may not be economically justified. On a major plant bus, the cost of differential relaying is usually insignificant when compared with the reduction in damage to the equipment and the reduced scheduled outage of important plant or process facilities.

If problems exist in coordinating the system overcurrent relay settings, differential relaying is effective in obtaining selectivity. An example is a system including multiple major bus distribution lineups at the same voltage level, with one bus feeding another. This configuration generally results in unacceptably high overcurrent relay settings to obtain coordination.

Copyright © 2001 IEEE. All rights reserved.

Copyright The Institute of Electrical and Electronics Engineers, Inc.
Provided by IHS under license with IEEE
No reproduction or networking permitted without license from IHS
Not for Resale

On a bus fed by a local generator, bus differential relaying is recommended to clear the bus quickly and hold the rest of the system together. The overcurrent relays used to protect generator circuits generally take considerable time to operate.

The differential protection methods generally used (in the order of the quality of protection they provide) are

— Voltage-responsive and linear coupler
— Percentage differential (where applicable)
— Current responsive
— Partial differential (sometimes not considered a differential scheme and called current summation)

Because the differential relay should trip all circuit breakers connected to the bus, a multicontact auxiliary relay is needed. This auxiliary device should be a high-speed lockout relay, with contacts in the circuit breaker closing circuits to prevent panic manual closing of a circuit breaker on the fault. The lockout relay should be reset by hand before any circuit breakers can be closed.

13.4.1 Voltage differential relaying

Voltage differential relaying uses "through" iron-core CTs. Using a voltage-responsive (or high-impedance) operating coil in the relay overcomes the problem of CT saturation. Separate CTs are required in each bus-connected circuit as shown in Figure 13-5. Voltage differential bus protection is not limited as to the number of source and load feeders and has the following features:

a) High-speed operation on the order of 1 cycle to 3 cycles.
b) High sensitivity that can be set to operate on low values of phase- or ground-fault currents in most installations.
c) Relay that operates from all standard bushing CTs and from switchgear through CTs with distributed windings.
d) Relay that is not adversely affected by CT saturation, dc component of fault current, or circuit time constant.
e) Discrimination between external and internal faults, obtained by relay settings with no required restraint or time delay.

All CTs should have the same ratio unless high-impedance relays suitable for use with different ratio CTs are used. Auxiliary CTs should not be used to match ratios. CTs with different maximum ratios can be matched by operating the high-ratio transformers as autotransformers using an intermediate tap to obtain a match with the maximum tap of the lower ratio CTs.

All CTs should have low secondary leakage reactance; wound CTs are generally not suitable. Bushing CTs constructed on toroidal cores with completely distributed windings generally have negligible leakage reactance. A distributed winding starts and ends at the same point on the core. Through CTs having suitable characteristics are available for use in switchgear assemblies.

 Copyright © 2001 IEEE. All rights reserved.

Copyright The Institute of Electrical and Electronics Engineers, Inc.
Provided by IHS under license with IEEE
No reproduction or networking permitted without license from IHS Not for Resale

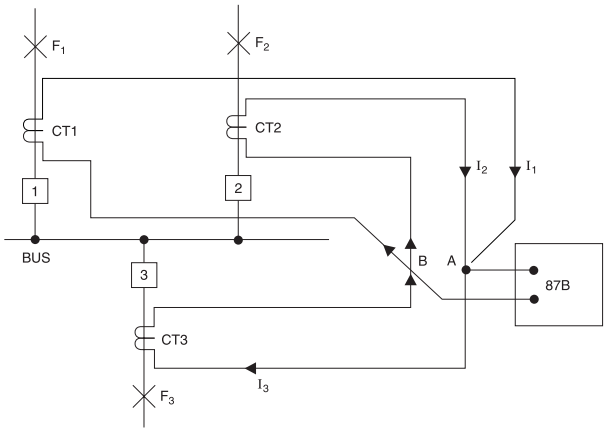

Figure 13-5—Voltage differential relaying

The relay should fulfill two requirements:

— First, it should not trip for any fault external to the zone of protection.
— Second, it should be capable of operating for all faults internal to the zone of protection.

Considering the first requirement, refer to Figure 13-5. Assume a three-circuit-breaker bus with a fault at the location shown. Consider for simplicity only one of the three phases. For the fault F_3 indicated, the fault current I_3 flows through Circuit Breaker 3 with the currents flowing through Circuit Breaker 1 and Circuit Breaker 2. Each current is smaller than, but together sum up to, I_3. Assume that the CTs behave ideally. Then the CT secondary current produced at Circuit Breaker 3 balances the sum of the currents produced at Circuit Breaker 1 and Circuit Breaker 2. This current circulates in the CT secondary circuits and produce little, if any, voltage across Point A and Point B.

If, for some reason, the CT secondary current at Circuit Breaker 3 does not balance the sum of the currents produced by the CTs at Circuit Breaker 1 and Circuit Breaker 2, excess or difference current is forced to flow through CT 3 and cause the voltage across Point A and Point B to increase to a point where the relay (Device 87B) will tend to operate. It thus becomes apparent that the CT at Circuit Breaker 3 has a greater tendency to saturate than the CTs at Circuit Breaker 1 and Circuit Breaker 2, for the given fault location, because Circuit Breaker 3 sees the total current while the other two circut breakers each see only a fraction of the total. From the point of view of the relay, the worst condition would be where the CTs at Circuit Breaker 3 saturate almost completely and hence produce no detectable secondary current, while the CTs at Circuit Breaker 1 and Circuit Breaker 2 do not saturate at all and, hence, reproduce the current faithfully. For complete saturation, the mutual reactance of the bushing CT approaches zero. If it has no appreciable secondary leakage reactance, then the only secondary impedance of the CT is its winding resistance. Thus, for complete saturation of the CT at Circuit Breaker 3, the voltage developed between Point A and Point B is the product of $(I_1 + I_2)$ and the sum of the total resistance in the circuit between Point A and

Copyright © 2001 IEEE. All rights reserved.

Copyright The Institute of Electrical and Electronics Engineers, Inc.
Provided by IHS under license with IEEE
No reproduction or networking permitted without license from IHS
Not for Resale

Point B and CTs at Circuit Breaker 3 (including the CT secondary resistance). The differential relay is set so that it does not operate for this voltage. It is obvious that this voltage depends on the magnitude of the fault current, the type of fault, and the total resistance. In the case of internal faults, the secondary currents do not circulate, but rather result in a high enough secondary voltage to cause the relay to operate.

A nonlinear resistor or a voltage-limiting circuit is connected in parallel with the sensitive high-impedance operating coil to limit the voltage that may be attained during high internal faults. To obtain higher speed operation for high internal faults, the unit is connected in series with the nonlinear resistor.

When offset-fault current occurs or residual magnetism exists in the CT core, or both, an appreciable dc component in the secondary current is present. This condition has caused false tripping when simple unrestrained low-impedance relays are used for bus differential. Voltage differential relays are made insensitive to the dc component by connecting the relay-sensitive operating coil in series with a capacitor and reactor. The circuit is resonant at the fundamental power frequency, and the dc component is blocked by the series capacitor (see Seeley and von Roeschlaub [B5]).

13.4.2 Air-core CT (or linear coupler) method

The air-core CT method provides extremely reliable high-speed bus protection. It is highly flexible to future expansion and system changes. The couplers can be open-circuited without any difficulties to simplify switching circuits. The operating time for one type of linear coupler system is 1 cycle or less above 150% of pickup and 1 cycle for another type of linear coupler system. This scheme eliminates the difficulty due to differences in the characteristics of iron-core CTs by using air-core mutual inductances without any iron in the magnetic circuit. Therefore, it is free of any dc or ac saturation.

The linear couplers of the different circuit breakers are connected in series and produce secondary voltages that are directly proportional to the primary currents going through the circuit breakers, as shown in Figure 13-6.

With the simple series circuit shown in Figure 13-6,

$$I_R = \frac{E_{\text{sec}}}{Z_R + \sum Z_C}$$

$$= \frac{I_{pri} M}{Z_R - \sum Z_C}$$

where

E_{sec} is voltage induced in linear coupler secondary,
I_{pri} is primary current (rms symmetrical),

 Copyright © 2001 IEEE. All rights reserved.

Copyright The Institute of Electrical and Electronics Engineers, Inc.
Provided by IHS under license with IEEE
No reproduction or networking permitted without license from IHS Not for Resale

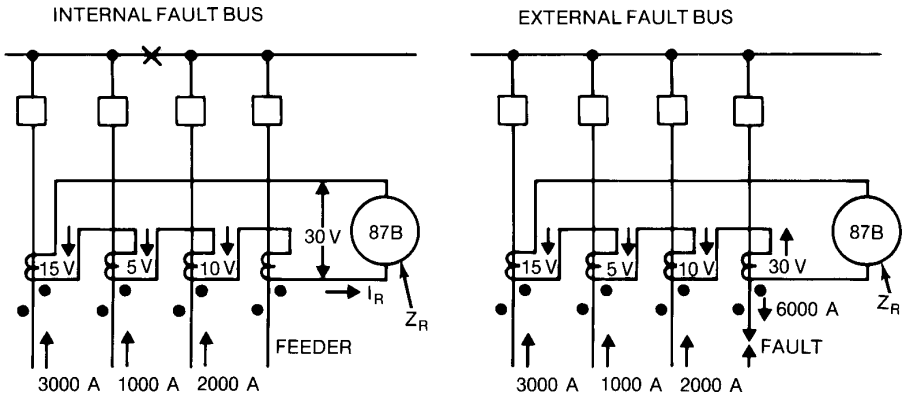

Figure 13-6—Linear coupler bus protective system with typical values illustrating its operation on internal and external faults

I_R is current in relay and linear coupler secondary,

M is mutual impedance, 0.005 W, 60 Hz,

Z_C is self-impedance of linear coupler secondary,

Z_R is impedance of relay.

During normal conditions or for external faults, the sum of the voltage produced by the linear couplers equals zero. During internal bus faults, however, this voltage is no longer zero and is measured by a sensitive relay that operates to trip circuit breakers and clear the bus.

Linear couplers are air-cored mutual reactors wound on nonmagnetic toroidal cores so that the adjacent circuits do not induce any unwanted voltage. For the conductor within the toroid, 5 V is induced per 1000 A of primary current. Therefore, by design, the mutual impedance M is 0.005 W, 60 Hz. In other words, $E_{sec} = I_{pri}\, M$.

Electronic voltage differential relays are also available, providing faster operating times than electromechanical relays.

13.4.3 Percentage differential relay

Where relatively few circuits are connected to the bus, relays using the percentage differential principle may be employed. These relays are similar to transformer differential relays that are described in Chapter 11. The problem of application of percentage differential relays for bus protection, however, increases with the number of circuits connected to the bus. It requires that all CTs supplying the relays have the same ratio and identical characteristics. Variation in the characteristics of the CTs, particularly the saturation phenomena under short-circuit conditions, presents the greatest problem for this type of protection and often limits it to applications where only a limited number of feeders are present.

Copyright © 2001 IEEE. All rights reserved.

Copyright The Institute of Electrical and Electronics Engineers, Inc.
Provided by IHS under license with IEEE
No reproduction or networking permitted without license from IHS
Not for Resale

13.4.4 Current differential relaying

When voltage or linear coupler differential protection cannot be economically justified, a less expensive current differential scheme may be considered. This scheme utilizes simple induction overcurrent relays connected to respond to any difference between the currents fed into the bus and the current fed from the bus. The CT arrangements are the same as shown in Figure 13-1, Figure 13-2, Figure 13-3, and Figure 13-4. The connections are as shown in Figure 13-5.

Chapter 4 gives details on these relays. A special form of overcurrent relay is available with an internally mounted auxiliary relay with connections to permit testing the integrity of the CT circuits for accidental ground faults and open circuits. The connections are arranged so that while checking on one phase, the relays in the other two phases are still providing protection.

13.4.5 Partial differential protection

Partial differential protection, sometimes called summation overcurrent relaying, is a modification where one or more of the load circuits are left uncompensated in the differential system (see Figure 13-7). For this reason, naming it a differential scheme may be a misnomer. This method may be used as primary protection for buses with loads protected by fuses, as backup to a complete differential protection scheme, and as local backup protection for stuck load circuit breakers, which fail to operate when they should. The phase overcurrent relays are set above the total bus load or the total rating of all loads supplied from the bus section.

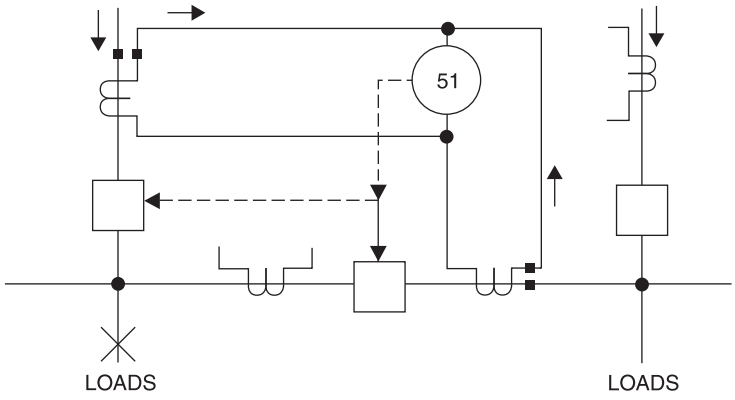

Figure 13-7—Partial differential relaying (three-breaker scheme)

When a normally closed tie breaker separates loads as shown in Figure 13-7, this scheme can provide selectivity between the two sources. In a conventional scheme with relays on each incoming line, a fault on either bus results in a loss of both incoming lines because their settings are identical. With the partial differential scheme, a fault on one bus causes a summation of currents in one set of relays, and a subtraction of currents in the other set of

Copyright © 2001 IEEE. All rights reserved.

Copyright The Institute of Electrical and Electronics Engineers, Inc.
Provided by IHS under license with IEEE
No reproduction or networking permitted without license from IHS
Not for Resale

relays (not shown). This difference in currents allows the incoming line relays to be selective, and only the faulted bus is de-energized.

Partial differential relays should provide enough time delay to be selective with relays on the load circuits. Consequently, the sensitivity and speed of partial differential protection is not as good as for full differential protection.

13.5 Backup protection

If the primary protective system fails to operate as planned, some form of backup relaying should be provided in the industrial power system or in the power supply system.

Bus backup protection is inherently provided by the primary relaying at the remote ends of the supply lines. This setup is known as remote backup protection. It may not be adequate because of system instability and effects on other power systems, and local backup relaying may be necessary. The performance of various remote and local backup relaying schemes has been analyzed (see Kennedy and McConnell [B3]). Chapter 14 gives further information on utility service supply-line requirements and the backup protection by utility relaying. (See also Beckmann, et al. [B1])

Circuit breaker failure can cause catastrophic results, such as complete system shutdown. Local circuit breaker failure or stuck circuit breaker relay schemes are available to quickly trip line-side circuit breakers if the circuit breaker on the faulted circuit fails to operate within a specified time. However, those schemes are normally applied only on buses where the extra expense can be economically justified.

13.6 Low-voltage bus conductor and switchgear protection

Low-voltage bus and switchgear are often protected by current-limiting fuses, sized to the full-load rating when bus and switchgear have bus bracings that are less than the available fault current. Current-limiting fuses are often used to limit the fault current to levels that the bus and switchgear can handle.

When the short time-delay setting on a circuit breaker exceeds 3 cycles, the bus and switchgear need to be tested and specified for that period, which is longer than usual: standard bracing tests are for 3 cycles only.

To reduce the possibility of destructive arcing ground faults on 480Y/277 V systems, the 480 V bus may be insulated. Preventing a ground fault from occurring is far better than shutting down a system or a part of a system after a ground fault has occurred.

Copyright © 2001 IEEE. All rights reserved.

Copyright The Institute of Electrical and Electronics Engineers, Inc.
Provided by IHS under license with IEEE
No reproduction or networking permitted without license from IHS
Not for Resale

13.7 Voltage surge protection

Protection against voltage surges due to lightning, arcing, or switching is required on all switchgear connected to exposed circuits entering or leaving the equipment. A circuit is considered exposed to voltage surges if it is connected to any kind of open-line wires, either directly or through any kind of cable, reactor, or regulator. A circuit connected to open-line wires through a power transformer is not considered exposed if adequate protection is provided on the line side of the transformer. Circuits confined entirely to the interior of a building, such as an industrial plant, are not considered exposed to lightning surges, and may not require lightning surge protection. Contact the utility serving the premises to determine the possibility of switching surges resulting from capacitor switching.

Many systems now employ banks of capacitors to correct for low power factor. This setup is especially important for cogeneration projects. Failure of controls for these capacitors can lead to escalating voltage surges. Either oil or vacuum switches used to switch capacitor banks can initiate voltage surges during switching.

Protection is provided by surge arresters connected, without fuses or disconnecting devices, at the terminals of each exposed circuit (see 7.7.2 in IEEE Std C37.20.2-1999 and 7.8 in IEEE Std C37.20.3-2001). Surge protection connected directly to the bus is not recommended as the reliability of the bus will be diminished.

Modern metal oxide arresters are highly nonlinear resistors with sharply decreasing resistance as impressed voltage is increased. As such, they are extremely sensitive to the system line-to-ground operating voltage and to temporary line-to-ground power-frequency overvoltages (TOV). Metal oxide arresters have maximum continuous operating voltage (MCOV) ratings that should not be exceeded by the anticipated maximum line-to-ground system operating voltage. Arrester manufacturers provide TOV-versus-time capability data to facilitate proper allowance for TOV. Normally the unfaulted phase-to-ground voltage associated with a single-line-to-ground fault is considered the TOV magnitude. An assumed time duration of the TOV should be established to determine TOV duty on the arrester. As a minimum, this value is ground-fault clearing time plus a generous margin. Often 10 s is selected, which is a typical neutral resistor specified time capability. In resistance-grounded and ungrounded medium-voltage systems, the TOV is the maximum anticipated line-to-line operating voltage. For solidly grounded systems, the TOV is less than the line-to-line operating voltage, and its accurate determination traditionally involves symmetrical component impedance data of the system. See IEEE Std C62.22-1997.

In resistance-grounded and ungrounded systems, the most common MCOV ratings for station- and intermediate-class arresters are given in Table 13-1.

In solidly grounded and ungrounded systems, the most common MCOV ratings for station- and intermediate-class arresters are given in Table 13-2 .

The lowest rated arrester that meets the MCOV and TOV requirements is the proper rating selection.

 Copyright © 2001 IEEE. All rights reserved.

Copyright The Institute of Electrical and Electronics Engineers, Inc.
Provided by IHS under license with IEEE
No reproduction or networking permitted without license from IHS Not for Resale

Table 13-1—Most common MCOV ratings for station- and intermediate-class arresters in resistance-grounded and ungrounded systems

System voltage (kV)	Arrester MCOV rating[a] (kV)
13.8	12.7
6.9	6.1–7.65
4.16	3.7–5.1
2.4	2.2–2.55

[a]Based on the offering of one manufacturer. Other manufacturers have at least one offering at or very near for each range.

Table 13-2—Most common MCOV ratings for station- and intermediate-class arresters in solidly grounded and ungrounded systems

System voltage (kV)	Arrester MCOV rating[a] (kV)
13.8	8.4–10.2
6.9	5.1
4.16	2.55–3.7
2.4	2.2–2.55

[a]Based on the offering of one manufacturer. Other manufacturers have at least one offering at or very near for each range.

Industry recognizes four arrester classes, in order of protective efficiency and durability:

— Station
— Intermediate
— Distribution
— Secondary

The first three classes serve the high- and medium-voltage levels, and secondary arresters are for low-voltage system application. Important system components (e.g., medium-voltage bus and switchgear) normally utilize station- and intermediate-class arresters.

If the line-cable junction arresters are metal-oxide, no arresters are required at the switchgear regardless of the cable length and arrester class.

Copyright © 2001 IEEE. All rights reserved.

Copyright The Institute of Electrical and Electronics Engineers, Inc.
Provided by IHS under license with IEEE
No reproduction or networking permitted without license from IHS
Not for Resale

Surge arresters may be required to protect the switchgear at altitudes above 1 km, even though the circuits are not connected to exposed circuits. This additional consideration is due to the voltage correction factors applicable above 1 km altitude. Surge arresters are applied so that the impulse-voltage protective level maintained by the surge arrester is about 20% less than the corrected impulse-voltage rating of the switchgear. These devices should be station surge arresters.

13.8 Conclusion

Because of its location and function in the electric power system, the bus and switchgear should be designed, located, and maintained to prevent faults. The preferred practice for bus switchgear protection above 600 V is voltage-responsive or linear coupler differential relaying with the power system designed with a sectionalized bus so that continuity of service can be maintained to a portion of the load. The best protective relaying in a single-bus arrangement operates to cut off power to all circuits supplied by the bus.

Location of the equipment in a good environment and maintenance on a planned basis help to prevent the need for relays to operate (see Killin [B4]). If a fault does occur, high-speed sensitive relaying limits the damage so that repairs can be made quickly and service restored in a short time. Fast clearing of faults also can save lives by minimizing explosion and fire aftermath. Furthermore, fast clearing of human-contact faults has saved lives or reduced injury.

13.9 References

This recommended practice shall be used in conjunction with the following standards. When the following standards are superseded by an approved revision, the revision shall apply.

IEEE Std C37.20.2-1999, IEEE Standard for Metal-Clad Switchgear.[3]

IEEE Std C37.20.3-2001, IEEE Standard for Metal-Enclosed Interrupter Switchgear.

IEEE Std C37.97-1979 (Reaff 1990), IEEE Guide for Protective Relay Applications to Power System Buses.

IEEE Std C62.22-1997, IEEE Guide for the Application of Metal-Oxide Surge Arresters for Alternating-Current Systems.

NFPA 70-1999, National Electrical Code® (NEC®).[4]

[3]IEEE publications are available from the Institute of Electrical and Electronics Engineers, 445 Hoes Lane, P.O. Box 1331, Piscataway, NJ 08855-1331, USA (http://standards.ieee.org/).

[4]The NEC is published by the National Fire Protection Association, Batterymarch Park, Quincy, MA 02269, USA (http://www.nfpa.org/). Copies are also available from the Institute of Electrical and Electronics Engineers, 445 Hoes Lane, P.O. Box 1331, Piscataway, NJ 08855-1331, USA (http://standards.ieee.org/).

 Copyright © 2001 IEEE. All rights reserved.

Copyright The Institute of Electrical and Electronics Engineers, Inc.
Provided by IHS under license with IEEE
No reproduction or networking permitted without license from IHS Not for Resale

13.10 Bibliography

[B1] Beckmann, J. J., Dalasta, D., Hendron, E. W., and Higgins, T. D., "Service Supply Line Protection," *IEEE Transactions on Industry and General Applications*, vol. IGA-5, pp. 657–671, Nov./Dec. 1969.

[B2] Cable, B. W., Powell, L. J., and Smith, R. L., Jr., "Application Criteria for High-Speed Bus Differential Protection," *IEEE Transactions on Industry Applications*, vol. IA-19, July/August 1983.

[B3] Kennedy, L. F., and McConnell, A. J., "An Appraisal of Remote and Local Backup Relaying," *AIEE Transactions on Power Apparatus and Systems*, pt. III, vol. PAS-76, pp. 735–747, Oct. 1957.

[B4] Killin, A. M., "How Plant Management Evaluates Electrical Performance," *IEEE Transactions on Industry and General Applications*, vol. IGA-3, pp. 75–78, Mar./Apr. 1967.

[B5] Seeley, H. T., and von Roeschlaub, F., "Instantaneous Bus Differential Protection Using Bushing Current Transformers," *AIEE Transactions*, vol. 67, pp. 1709–1719, 1948.

Copyright © 2001 IEEE. All rights reserved.

Copyright The Institute of Electrical and Electronics Engineers, Inc.
Provided by IHS under license with IEEE
No reproduction or networking permitted without license from IHS
Not for Resale

Copyright The Institute of Electrical and Electronics Engineers, Inc.
Provided by IHS under license with IEEE
No reproduction or networking permitted without license from IHS

Not for Resale

Chapter 14
Service supply-line protection

14.1 General discussion

This chapter discusses the interface between the supplier of electricity and the consumer. It includes requirements for service quality for industrial and commercial power systems, possible system disturbances in utility and consumer systems and their effects, recommended corrective measures in system design and operating techniques, and several protective schemes of typical installations both with and without consumer generation. Many possible circuit arrangements and protective relaying schemes exist, and discussing each one is not possible. However, a few of the most frequently encountered circuit arrangements are covered.

The basic desire of the power company is to provide a reliable power supply of adequate capacity to serve the connected load. The consumer wants to receive such a power supply. These goals need a well-engineered design considering service requirements, system disturbances and protection against such disturbances, and personnel safety.

14.1.1 Design procedure

A typical sequence in designing an electrical service arrangement for a new plant could be as follows:

a) Classify and group loads according to their characteristics:
   1) Power required, real and reactive
   2) Optimum nominal voltage
   3) Sensitivity to voltage level
   4) Sensitivity to voltage sags and swells
   5) Sensitivity to interruptions
   6) Sensitivity to frequency variations
   7) Other unusual service requirements, such as sensitivity to nonsinusoidal wave shapes and harmonics
   8) Physical location of loads
   9) Future load considerations

b) Select, together with the electric utility personnel, a suitable supply service arrangement consistent with the economics of the application. Industrial plant power-system designers, together with electric utility personnel, should determine all the service requirements for the industrial plant process and the quality of service required from the electric utility. These requirements may include the system voltage, voltage limits, duration of abnormal voltages, the expected annual number of voltage disturbances and outages, frequency variations and their duration, harmonics, and utility system equipment relaying and reclosing schemes.

c) Obtain the short-time and long-time outage records for the existing facilities and estimates for new facilities. Analyze the effects of the various faults and system

Copyright © 2001 IEEE. All rights reserved.

Copyright The Institute of Electrical and Electronics Engineers, Inc.
Provided by IHS under license with IEEE
No reproduction or networking permitted without license from IHS
Not for Resale

disturbances that are likely to occur on the operation of the proposed facilities and compare them to the service requirements.

d) If necessary, restructure the one-line diagram and apply any equipment that would reduce the effects of these faults and disturbances and improve the system performance and reliability. Such changes may include
   1) Addition of capacitors, voltage regulators, or generators
   2) Addition of surge protective devices (see IEEE Std C62.22-1997[1])
   3) Modification of protective relaying and switching schemes, such as the use of time-delay undervoltage relay or latching relays, use of circuit breakers or remotely operated switches and contactors, dc control power instead of ac control, automatic control instead of manual switching, autoreclosing, or loop circuits instead of radial feeds
   4) Use of auxiliary devices or stored energy control systems, such as batteries or capacitive tripping devices
   5) For a plant generating its own power, use of load-shedding for loads that are noncritical during low-frequency and other system disturbances (This addition may keep the system running by improving system frequency and voltage.)
   6) Connection to redundant supply sources and network connection for continuity
   7) Addition of current-limiting cable limiters or fuses on 600 V or below systems
e) Evaluate the relative cost of the changes listed in Item d) against the loss of production, safety, equipment damage and extra maintenance (see IEEE Std 493-1997).

Comprehensive communications between the plant designer and utility personnel should result in a selectively coordinated system, increased reliability, and reasonable equipment cost by avoiding duplication of equipment and optimum use of equipment.

14.2 Service requirements

Consideration of the design, operation, and protection of service lines between a consumer and utility power supplier should be based on deep mutual understanding of each other's needs, limitations, and problems. The electric power supply for an industrial or commercial power system should meet the following basic requirements listed below:

a) Accommodate normal peak power demand and provide ability to start large motors without excessive voltage sag.
b) Maintain deviations from normal frequency and normal voltage within acceptable tolerances.
c) Maintain consistent phase rotation in a multiphase system.
d) Maintain voltage-wave distortion, harmonics, and voltage surges within acceptable tolerances.
e) Maintain three-phase supply during normal conditions to avoid voltage unbalance and single-phasing.

[1]Information on references can be found in 14.6.

Copyright © 2001 IEEE. All rights reserved.

Copyright The Institute of Electrical and Electronics Engineers, Inc.
Provided by IHS under license with IEEE
No reproduction or networking permitted without license from IHS Not for Resale

f) Be highly reliable, i.e., the utility service should be available a high percentage of time, it should be within acceptable tolerance limits, and it should effectively serve the loads.

These requirements are measures of quality of service to a consumer. The quality of electric power supply has become important in the operation of many modern electrically supplied systems. The nature of a consumer's operation and type of loads set the requirements of quality of service. The simplicity of these statements of service requirements may tend to obscure the complexity of technical and commercial problems that sometimes arise, but the statements are the true measures of quality of service to a consumer.

Service quality involves two distinct factors, each of which should be considered separately and each of which has different degrees of importance among consumers. The two factors are power quality and power reliability. Together, these factors make up service quality.

Each load device has specific power quality tolerances within which it will operate normally. Table 14-1 lists electric service deviation tolerances of various load and control devices. The term *load*, as used in this chapter, means an electric device (e.g., motors, capacitors, lighting lamps, heating elements, motor starters, solenoids, computers, communication equipment, annunciators, inverters, rectifiers, control circuits). To a consumer, these loads are only a means to an end. They are the muscles and nerve systems needed to operate chemical processes, mines, public buildings, or manufacturing plants.

Reliability requirements for power supply to certain load devices may completely change service considerations. For example, an incandescent lamp performs satisfactorily on voltage containing myriad abnormalities, but if it is the lamp in an exit fixture in a public building or an operating lamp in a hospital operating room, then it must have power of absolute reliability. By contrast, a computer used for process control or power plant load management must be supplied with power of extremely high quality, but if it is being used to process routine business data, then service reliability may become secondary.

A study of a consumer's operation and loads can help the utility-consumer team arrive at the required level of service quality. A study of possible system disturbances and their effects (see 14.3) should be made. Where these disturbances exceed the tolerances of the load devices for the equipment included in the system, then appropriate steps outlined under 14.3.6 should be considered. The required reliability should also be kept in mind, and where higher-than-normal utility reliability is required, suitable measures as outlined under corrective measures (see 14.3.6) and supply-line protection (see 14.4) should be considered.

Copyright © 2001 IEEE. All rights reserved.

Copyright The Institute of Electrical and Electronics Engineers, Inc.
Provided by IHS under license with IEEE
No reproduction or networking permitted without license from IHS
Not for Resale

Table 14-1—Electric service deviation tolerances for load and control equipment

Device	Voltage level[a]	Frequency	Comment
Alarms, systems operating on loss of voltage	Variable	—	
Capacitors for power factor correction	±10%	Variable	Reactive power output of capacitors varies with the square of the impressed voltage (see 3.5.10 of IEEE Std 141-1993) (e.g., –10% V is –19% VARS).
Communication equipment	±5%	—	
Computers, data-processing equipment	±10% for 1 cycle[b]		Refer to manufacturer for frequency and voltage tolerances
Contactors, motor starters ac coil burnout ac coil dropout[c] dc coil dropout	 +10% to –15% –30% to –40% for 2 cycles –30% to –40%	 — — —	
Electronic tubes	±5%	—	
Lighting fluorescent incandescent mercury vapor	 –10% (fluorescent) –25% +18% –50% for 2 cycles	 — — —	 Uncertain starting, shortened life. Lamp will extinguish. 10% of normal life. Lamp will extinguish.
Motors, standard induction[d]	±10%	±5%	Sum of absolute values of voltage and frequency deviation should be no greater than ±10%.
Resistance loads, furnaces, heaters	Variable	—	
Solenoids, shutoff valves for gas- or oil-fired furnaces, magnetic chucks, brakes, clutches	–30% to –40% for 0.5 cycle	—	
Solenoid operated devices	+10% to –15%	—	See 3.5.11 of IEEE Std 141-1993.
Transformers	+5% with rated kVA +10% with no load	—	Voltage deviations apply at rated frequency. Maintain constant V/Hz ratio to prevent overexcitation.
Inverters (gaseous, thyristor)	+5% with full load +10% with no load –10% transient	±2 Hz	Firing circuits and inverters generally determine tolerances. If supply voltage is +5%, inverter loading should be reduced by 5%.

Copyright © 2001 IEEE. All rights reserved.

--`,,`-`-`,,`,,`,`,,`---

Copyright The Institute of Electrical and Electronics Engineers, Inc.
Provided by IHS under license with IEEE
No reproduction or networking permitted without license from IHS
Not for Resale

Table 14-1—Electric service deviation tolerances for load and control equipment (Continued)

Device	Voltage level[a]	Frequency	Comment
Rectifiers diode (gaseous)	+5% with full load +10% with no load –10% transient	—	If supply voltage is +5%, rectifier loading should be reduced by 5%.
diode (solid state)	±10%	—	Some rectifier systems rated by NEMA MG 1-1998 for voltage deviation of +5% to –10%.
phase controlled (gaseous, thyristor)	±5% with full load +10% with no load –10% transient	±2 Hz	Firing circuits and rectifier generally determine tolerances. If supply voltage is +5%, rectifier loading should be reduced by 5%.
Generators	±5%	–5%	Voltage tolerance is generally a function of generator design. Surge protective devices should be applied at generator terminals. Maintain constant V/Hz ratio to prevent overexcitation.
Turbines (steam)	Variable	Variable	Manufacturer should supply voltage and frequency tolerances.
NOTE—Systems with rectifiers or inverters may contain harmonics that cause nonsalient pole generator overheating. Generator load reduction may be required as a function of the number of phases in the rectifier system as follows: 24 phases, no reduction; 12 phases, 8% reduction; 6 phases, 10% reduction.			

[a]Properly selected lightning arresters and surge protective devices are presumably installed throughout the system. Deviation tolerance is continuous unless specified. Percent voltage unbalance = (100 × maximum voltage deviation from average voltage)/(average voltage).
[b]Voltage tolerances may not be applicable for equipment with integral power supply or voltage regulator.
[c]This type of contactor is not recommended where tripouts due to voltage sags are undesirable.
[d]Phase voltages should be balanced (see NEMA MG-1-1998).

14.3 System disturbances

Many of the control devices and loads that are part of commercial and industrial power systems are sensitive to the magnitude, wave shape, and frequency of the supply voltage. Voltage and frequency variation and the presence of harmonics in most cases deteriorate the quality of power. Voltage variations and transients, deviations in frequency, and short- and long-term power supply losses can originate in the utility system.

System disturbances are sometimes introduced by the distribution system within the industrial or commercial power system beyond the utility delivery point. Outage rates and average repair times for typical electric equipment can be found in IEEE Std 493-1997.

Copyright © 2001 IEEE. All rights reserved.

Copyright The Institute of Electrical and Electronics Engineers, Inc.
Provided by IHS under license with IEEE
No reproduction or networking permitted without license from IHS
Not for Resale

The effects of the following disturbances on the various types of load devices should be analyzed:

— Voltage variation
— Frequency variation
— Harmonics
— Short circuits

These disturbances can result in equipment damage, loss of production, production of inferior-quality product, damage to plant facilities (e.g., fire), and injury to personnel.

14.3.1 Voltage variations

Voltage variation can be classified under several categories: long-time voltage variations, voltage sags, voltage swells, voltage transients, voltage flicker, voltage unbalance, and voltage interruption. Each type of voltage variation has a different effect on load devices.

If the process controlled by the computer is critical, an on-line filtered uninterruptible power supply (UPS) system should be used. A complete line of equipment is available for protecting electronic devices and computers from erratic operation or failure due to power-line transients, fluctuations, and interruptions. This equipment should be used for electronic devices that are critical for process and production (see IEEE Std 446-1995).

14.3.1.1 Long-time voltage variations

Long-time voltage variations result from daily changes in load on transmission lines, transformers, and distribution lines. Voltage variations for normal operation should be within the limits defined in ANSI C84.1-1982. The voltage level, however, may gradually change over a period of minutes or hours and, as a result, subject loads to voltages that are either too high or too low to permit continued satisfactory operation. The effect of these voltage variations on lighting equipment is shown in Figure 14-1, Figure 14-2, and Figure 14-3. Table 14-2 shows how changes in voltage affect motor performance (see IEEE Std 141-1993).

A long-time overvoltage may occur if some type of line-voltage-regulating device defectively advances to its full boost position. Correcting the condition may require a service person to travel to the location.

Power factor correcting capacitors may be damaged by high voltage, which is still within the apparent tolerable band of the capacitor. This damage can occur if the high voltage results in overexcitation of transformers or motors. Such overexcitations can lead to distorted voltage wave shapes and result in excessive capacitor currents. This consideration is included in capacitor standards. But the compounding of these wave distortions with the distortions caused by solid-state phase-controlled devices has not been included in the standards (see Linders [B6][2]).

[2]Numbers in brackets correspond to the numbers in the bibliography in 14.7.

Copyright © 2001 IEEE. All rights reserved.

Copyright The Institute of Electrical and Electronics Engineers, Inc.
Provided by IHS under license with IEEE
No reproduction or networking permitted without license from IHS Not for Resale

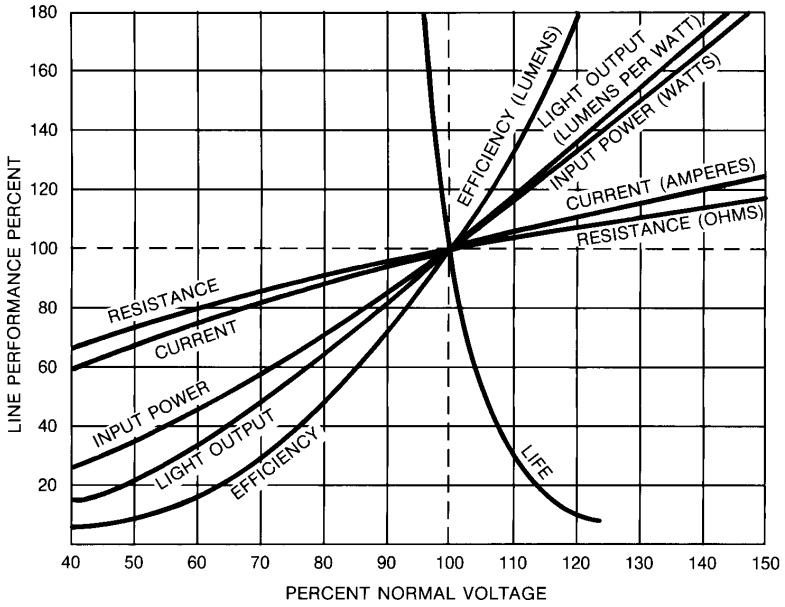

Figure 14-1—Incandescent lamp performance as affected by voltage

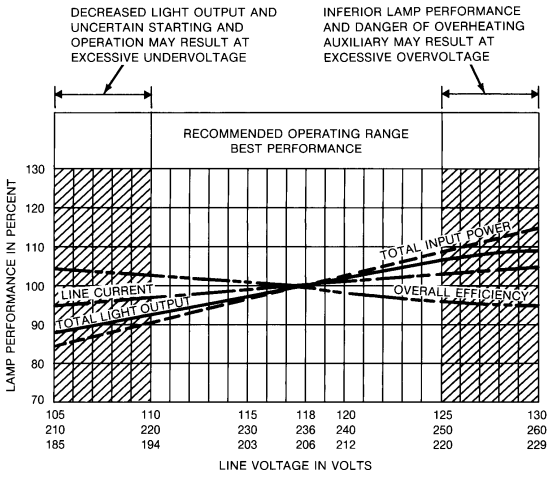

Figure 14-2—Fluorescent lamp performance as affected by voltage

Copyright © 2001 IEEE. All rights reserved.

Copyright The Institute of Electrical and Electronics Engineers, Inc.
Provided by IHS under license with IEEE
No reproduction or networking permitted without license from IHS
Not for Resale

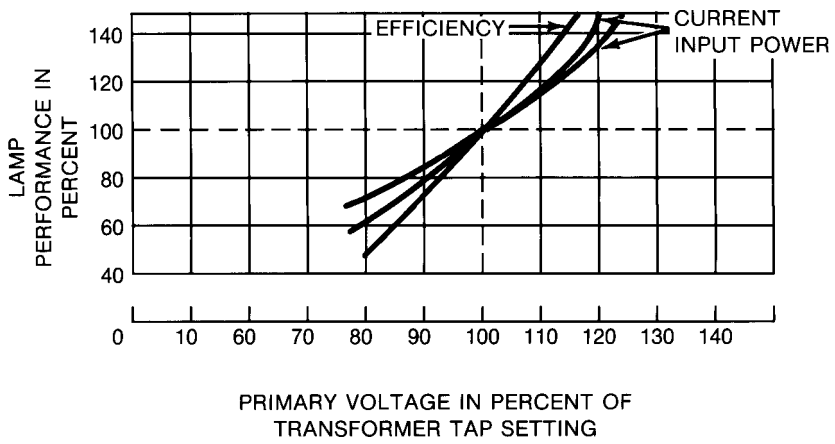

Figure 14-3—Mercury lamp performance as affected by voltage (120 V basis)

Table 14-2—General effect of voltage variations on induction-motor characteristics

Characteristic	Proportional to	Voltage variation	
		90% of nameplate	110% of nameplate
Starting and maximum running torque	Voltage squared	–19%	+21%
Percent slip	$(1/\text{voltage})^2$	+23%	–19%
Full load speed	Synchronous speed—slip	–0.2 to –1.0%	+0.2 to 1.0%
Starting current	Voltage	–10%	+10%
Full load current	Varies with design	+5 to +10%	–5 to –10%
No load current	Varies with design	–10 to –30%	+10 to +30%
Temperature rise	Varies with design	+10 to +15%	–10 to –15%
Full load efficiency	Varies with design	–1 to –3%	+1 to +3%
Full load power factor	Varies with design	+3 to +7%	–2 to –7%
Magnetic noise	Varies with design	Slight decrease	Slight increase

14.3.1.2 Voltage sags

Voltage sags are decreases in the voltage lasting 0.5 cycle to a few seconds (see IEEE Std 1100-1999).

Copyright © 2001 IEEE. All rights reserved.

Copyright The Institute of Electrical and Electronics Engineers, Inc.
Provided by IHS under license with IEEE
No reproduction or networking permitted without license from IHS
Not for Resale

Voltage sags are generally caused by transient line faults. Most of these faults are cleared within a few cycles. Most of the load devices in the plant usually remain energized during this condition if the voltage sag is not severe. Under severe voltage sag conditions, ac contactors drop out, and this loss may jeopardize the process. For continuous-process plants, providing suitable protective measures is necessary, and such voltage sags should be considered in initial design stages. Sags are produced by a sudden application of large loads, particularly across-the-line starting of large induction and synchronous motors.

The impact of transient and short-term defects described under 14.3.1.1 on industrial loads (e.g., lighting devices, motors, heating elements) is not serious. The defect may go unnoticed or produce a minor problem. But for modern electronic devices (e.g., computers, programmable controllers, communication systems), the impact varies from minor to potentially dangerous, depending on the service. Sensitivity of electrical equipment depends on the magnitude of voltage sag and its duration. Modern high-speed computers are sensitive to disturbances in the electrical power supply lines. Voltage sags (and swells) can produce false operation of digital computers and control equipment. Short-term defects, lasting up to 1 s, may not cause failures in electronic equipment, but can produce serious errors in logic circuits, registers, and other equipment used in computers and digital control systems. These devices are sensitive to interruptions of only a fraction of a cycle. An interruption of only a few cycles can cause the malfunction of peripherals, such as magnetic tape units. Most computers are designed to protect the contents of memory by a controlled sequence of dc power supplies in the event of a power interruption. If the process controlled by the computer is critical, an on-line filtered UPS system should be used (see IEEE Std 446-1995).

Contactors are sensitive only to magnitude of the voltage sag. They drop out at about 60% to 70% of system voltage or on 30% to 40% of voltage sag. Some contactors have a 50% voltage sag dropout, and some power plants apply this feature to station auxiliary equipment to ride through some sag conditions that occur during faults on the supply system. On the other hand, the duration of the voltage sag is important to other loads. Many electric motor drives are sensitive to the combination of magnitude and duration of voltage sags, both of which play an important role in whether a critical drive rides through a disturbance.

Induction motors, in general, ride through voltage sags or interruptions where high-speed reclosing is used; but for some production processes, this action could result in product defects. However, under long-term (more than 2 cycles) sags, an induction motor may reach an instability condition where the motor cannot drive its connected load at rated speed and, therefore, slows down. During these sag conditions, motors tend to draw excessive current, which causes the voltage to remain depressed at the motor terminals. Depressed motor terminal voltage may prevent proper recovery (or reacceleration), and motor overheating results.

Synchronous motors with proper controls can be made to ride through voltage sags for several cycles, but may be damaged on utility-line reclosure (see Walsh [B12]). Continuing low voltage at the terminals tends to make a synchronous motor unstable (see Linders [B6]).

Both induction and synchronous motors, particularly motors above about 375 kW (500 hp), can be severely damaged by instantaneous reclosing. Such reclosing usually takes place between 12 cycles to 18 cycles from the initiation of a fault. For motors serving high-inertia

Copyright © 2001 IEEE. All rights reserved.

Copyright The Institute of Electrical and Electronics Engineers, Inc.
Provided by IHS under license with IEEE
No reproduction or networking permitted without license from IHS
Not for Resale

loads, the motor voltage can be 180° out of phase with the reclosed source. Such conditions can set up transient motor air-gap torques as high as 10 to 20 times rated values. These torques can twist or break motor and driven equipment shafts. Relay systems utilizing a combination of underfrequency, undervoltage, and sensitive directional power relays have been devised to protect from instantaneous reclosing. However, such relay systems may race between the protection relay time and the reclosing time; and protection cannot be assured in every instance. One solution is to persuade the utility to delay reclosing to about 5 s to allow the motor contactors or breakers time to drop out on loss of voltage (see McFadden, et al. [B9]).

14.3.1.3 Voltage swells

Voltage swells are increases in the voltage lasting 0.5 cycle to a few seconds (see IEEE Std 1100-1999).

Voltage swells result from switching within the plant, particularly switching of the primary side of a transformer that is coupled to a heavy load. In some cases, a combination of grounding and an arcing fault condition also produces swells.

Another consideration is the interaction of shunt capacitors on the utility system with those that may be applied in the service network. The potential concern is switching voltage magnification between the two circuits should the resonant frequencies of the service circuit be equal or close to the resonant frequency of the utility circuit. This situation is a particular concern when capacitor banks are in the service network at various voltage levels (see Dunsmore, et al. [B3]).

14.3.1.4 Voltage transients

Voltage transients result from remote system faults, interruption of faults, lightning surges, switching surges from operating disconnects or circuit breakers in the transmission or distribution system, fuse blowing, impact loads and load dropping, routine operating open-arc or submerged-arc furnaces, silicon controlled rectifier (SCR) controlled loads, and welders, but the transient event lasts less than 1 cycle.

Transient voltage spikes entering equipment through supply lines can damage semiconductor devices if proper protection against transients is not taken. Surge protective devices, when applied properly, protect these devices. Voltage and frequency transients can cause errors in the computer memory, complete memory loss, word structure alteration, or nonprogram jumps. Where possible, computers should be fed from a supply line other than the one supplying the plant load and/or fed from an online UPS (see IEEE Std 446-1995).

14.3.1.5 Voltage flicker

Voltage flicker is a variation of input voltage sufficient in duration to allow visual observation of a change in electric light source intensity (see IEEE Std 1100-1999). Voltage flicker results from cyclic load variations, which are usually single-phase, but may be three-phase. Arc furnaces and electric welding sets are the most common causes of flicker within the power

 Copyright © 2001 IEEE. All rights reserved.

Copyright The Institute of Electrical and Electronics Engineers, Inc.
Provided by IHS under license with IEEE
No reproduction or networking permitted without license from IHS Not for Resale

system. Higher power lamps in common use today are less sensitive to flicker due to a larger mass of the filaments. Various types of lamp performance as affected by voltage levels are given in Figure 14-1, Figure 14-2, and Figure 14-3 and in IEEE Std 141-1993.

Voltage flicker may also adversely affect induction motors even though it is considered an illumination phenomenon. Single-phase flicker can cause increased motor losses, continual variations in torque and speed, and thus increased vibration.

14.3.1.6 Voltage unbalance

Voltage unbalance and loss of a phase (single-phasing) may be caused by events such as large single-phase loads, unequal impedances (e.g., due to untransposed conductors in the supply system), one open fuse, or the failure of one pole to close properly in a circuit breaker or contactor. A single-phase condition is an extreme case of voltage unbalance. The voltage unbalance creates negative-sequence current, which cause an increase in motor losses, heating of generator rotors, and heating of motor windings. Severe negative-sequence conditions can lead to motor failures. In NEMA MG 1-1998, a voltage unbalance of no more than 1% is allowed in order to avoid excessive temperature rise. A voltage unbalance of 3.5% can result in a 20% to 25% increase in motor temperature rise and shorten the motor insulation life by over one half. Table 14-3 shows the effect of voltage unbalance on motor losses and temperature rise.

Table 14-3—Effect of voltage unbalance on motors at full load

Voltage unbalance (%)	0	2.0	3.5	5.0
Current, neg. seq. (%)	0	15.0	27.0	38.0
Current, stator (rms %)	100	101.0	104.0	107.5
Increase in losses (%)				
Stator average	0	2	3	15
Stator maximum	0	33	63	93
Rotor	0	12	39	76
Total motor	0	8	25	50
Temperature rise (°C)				
Class A	60	65	75	90
Class B	80	85	100	120

14.3.1.7 Voltage interruption

A voltage interruption is defined as complete separation of the consumer system from the utility power system. This type of power system disturbance can also vary considerably in

Copyright © 2001 IEEE. All rights reserved.

Copyright The Institute of Electrical and Electronics Engineers, Inc.
Provided by IHS under license with IEEE
No reproduction or networking permitted without license from IHS
Not for Resale

time duration, depending upon the cause of trouble and the method used to restore service. An interruption can last from 15 cycles to 30 cycles if high-speed reclosing is used, 1 s to 60 s or more if delayed automatic reclosing is used, and several minutes or hours if remote or manual switching is used or if automatic reclosing was not successful. These disturbances generally result from system faults.

When in-plant generation is used, synchro-check relays should be used to block closing for out-of-phase or frequency conditions between the generator and utility supply. The generator should be synchronized manually or by automatic-synchronizing equipment.

14.3.2 Frequency variation

The system frequency on large interconnected utilities is essentially constant. In this case, frequency deviation from the nominal system value is usually a result of a system disturbance where a significant amount of load or generation is lost. Isolated local generation, however, has varying frequencies within a band centered on a nominal value. A change in frequency may be undesirable for computers and motors, but many loads are not frequency sensitive, such as filament lamps and resistance heaters. Transformers, induction motors, and synchronous motors may be overexcited and can overheat on low frequency if the voltage is not reduced correspondingly to produce a constant voltage-to-frequency ratio. When the load control system is designed to maintain the shaft load, the motor may be overloaded during low frequency. Automatic load shedding is used to protect the power system against adverse effects of underfrequency operation. Many load-shedding schemes are designed to operate when a drop in system frequency at a rate greater than 1 Hz/s is recognized or if frequency drops to some value below nominal (e.g., 58 Hz in a 60 Hz system for 2 s to 5 s or more).

14.3.3 Harmonic distortion

The use of thyristors and rectifiers for high-voltage dc transmission, adjustable frequency drives, adjustable speed drives, battery chargers, and dc drives has introduced additional harmonic distortion into the electrical power system. These harmonics may be propagated over great distances. The presence of harmonic voltages or wave shape distortion may cause problems that require consideration (see IEEE Std 519-1992; IEEE Std C57.110-1988; IEEE Std 1100-1999; Linders [B7]).

Harmonic currents in induction and synchronous motors cause additional losses and heating and adversely affect their efficiency. Wound rotor induction motors are more likely to be affected than squirrel-cage induction motors. Synchronous motors are more adversely affected than induction motors. These effects are chiefly attributable to the harmonics of low orders that can have large magnitudes. Harmonics also cause an increase in motor exciting losses. Motor stator I^2R losses increase in proportion to the sum of the squares of the harmonic currents. Motors develop reduced or pulsating torques due to the presence of harmonics. Even harmonics can cause severe rotor heating.

Voltage levels at the loads may appear to be normal; and yet harmonics may be causing severe overheating in the generator, neutral cable, transformer, or capacitor and causing interference with communication or telephone systems.

Copyright © 2001 IEEE. All rights reserved.

Copyright The Institute of Electrical and Electronics Engineers, Inc.
Provided by IHS under license with IEEE
No reproduction or networking permitted without license from IHS Not for Resale

Where banks of capacitors are used, overvoltage from resonance may be encountered due to harmonics, which may damage the capacitors or other equipment. Transformers can carry rated load under rated conditions provided the harmonic factor of the load current does not exceed 5%. A greater current distortion requires that the transformer be derated in accordance with IEEE Std C57.110-1998, K-rated transformers may also be specified for dry transformers meeting UL 1561 and UL 1562 (see also IEEE Std 1100-1999).

14.3.4 Short-circuit current

Abnormalities in current are usually due to short circuits or faults in the utility supply or plant distribution system. These faults result in magnetic forces and heat that can cause explosions and fire in switching devices and other equipment if this switching equipment is not selected with adequate interrupting capability and braced to withstand magnetic forces based on the available fault-current magnitude at the equipment location. A short-circuit study is necessary to determine equipment interrupting rating requirements.

14.3.5 Summary of system disturbances

Any particular power system disturbance, as described in 14.3 and noted in Table 14-4, can result in an increase in the total operating cost of a facility (see IEEE Std 1100-1999). These increased costs are due to a reduction in motor efficiency and power factor, motor and transformer failures, power factor capacitor failures, equipment malfunctions, the need for complex control schemes and added protection devices, and increased capital cost required to supply emergency power for long-term disturbances through devices such as batteries, inverters, or diesel generators. Many consumer processes may suffer only loss of production time; however, some consumers also incur spoilage of product and damage to the production equipment.

Table 14-4—Electric power system disturbances

Disturbance	Duration	Effect on system	Typical cause
Voltage level change	Steady	±10% voltage	Normal system voltage variation resulting from load changes
Voltage swell or sag	0.5 cycle to a few seconds	Increase or decrease in voltage	Motor starting, shock loads, furnace loads, welders, planers, chippers, roughing drives
Voltage transients	Up to 1 cycle	Increase or decrease in voltage	Remote system faults, switching surges, lightning strikes, capacitor switching[a]
Voltage flicker	Variable	Visual voltage variations	Repetitive voltage swells or sags
Voltage notch	Up to 1/2 cycle	99% down to 0%V	Switching

Copyright © 2001 IEEE. All rights reserved.

Copyright The Institute of Electrical and Electronics Engineers, Inc.
Provided by IHS under license with IEEE
No reproduction or networking permitted without license from IHS
Not for Resale

Table 14-4—Electric power system disturbances (Continued)

Disturbance	Duration	Effect on system	Typical cause
Voltage interruption A	1 s maximum	0% voltage	Power transmission system or distribution system faults, network system faults[b]
Voltage interruption B	1 minute maximum	0% voltage	Power system faults or equipment failure requiring reclosing or resynchronizing operation[b]
Voltage interruption C	Extended	0% voltage	Permanent power system faults, equipment failure; accidental opening of power circuit breaker[b]
Voltage or harmonic distortion, noise	Variable	Fundamental or harmonic voltage increase	Arcing faults, ferroresonance, switching, transients, transformer, iron core reactor or ballast magnetizing requirements, controlled rectifiers, commutators, arc discharges, fluorescent lamps, motors
Voltage unbalance	Steady	More than 1% voltage variation among phases of three-phase system	Single-phase or unbalanced loads on three-phase system
Single phasing	Extended	Down to 0% voltage on one phase of three-phase system	Open conductor, switching with single-pole devices, fuse opening, circuit breaker or contactor failure
Power direction change, short circuits	Variable	Change of flow of current or power	Supply system faults, loss of transmission lines, synchronizing power surges, switching
Frequency deviation	Several cycles to several hours	Increase or decrease in voltage	Loss of generation of utility supply line

[a]Some types of switching transients may be amplified by coincident resonance of power factor capacitors and transformer inductances at the switching frequency.
[b]Disturbance may be in either the utility or consumer system. Disturbance may be isolated in 3 cycles to 30 cycles by circuit breakers or 35 cycles by network protectors, after which time service may be restored to disturbance-free portion of system.

Copyright © 2001 IEEE. All rights reserved.

Copyright The Institute of Electrical and Electronics Engineers, Inc.
Provided by IHS under license with IEEE
No reproduction or networking permitted without license from IHS
Not for Resale

14.3.6 Disturbance corrective measures

After a study of available quality of service and possible system disturbances is made, corrective measures may need to be considered for desired reliability and quality of power. Two routes are available to approach this problem. First, the consumer can take the responsibility for establishing the desired quality by making various improvements. Second, the energy supplier can make changes in its system to provide the consumer with electric energy to meet the consumer's requirements. Such changes can be negotiated between the consumer and the energy supplier (see IEEE Std 519-1992 and IEEE Std 1100-1999).

The use of multiple supply lines (or sources), transformers, bus sectionalizing, in-plant generation, circuit breakers with proper protective devices, properly rated fusible disconnects or interrupter switches, control schemes for automatic operation, additional voltage regulating devices, power factor capacitors, and additional protective relays can improve the quality of service. Refer to Table 14-5 for an overview of devices that can be used to minimize the effect of power system disturbances.

Table 14-5—Minimizing the effect of power system disturbances

Device	Minimized disturbance	Comment[a]
A. Power equipment and power switching devices		
Capacitors, shunt connected	Voltage level change	Can reduce normal system voltage variations.
Reactors, shunt connected	Voltage level change	Can reduce system overvoltages during light load periods.
Voltage regulators, induction or load tap changing	Voltage level change, voltage unbalance	Restores voltage level on load. Operating range usually ±10%. Response too slow to correct for voltage transients. Single-phase sensors and regulators required to correct for voltage unbalance.
Generators, synchronous motors, or condensers used with automatic voltage regulators	Voltage level change	Restores system voltage within limits imposed by maximum and minimum excitation on machine field.
Circuit breakers used with protective relays, network protectors, reclosers, fuses	Voltage transients, voltage single phasing, power flow change, frequency deviation	Isolates cause of disturbance. Restoration of service required. See Table 14-6.

Copyright © 2001 IEEE. All rights reserved.

Copyright The Institute of Electrical and Electronics Engineers, Inc.
Provided by IHS under license with IEEE
No reproduction or networking permitted without license from IHS
Not for Resale

Table 14-5—Minimizing the effect of power system disturbances

Device	Minimized disturbance	Comment[a]
B. Control circuit modification and small power equipment		
Battery, battery charger system	All	Provides uninterrupted power for control, instrumentation, communication. Alternate power source for emergency lighting, critical loads, Limited to about 50–300 Ah capacity during loss of voltage.
Cable shielding in control or communication circuits	Voltage or harmonic distortion, noise	Reduces or eliminates induced voltages that interfere with correct transmission of intelligence or control signals.
Control relays Time delay dropout	Voltage interruption	Primarily used in motor control circuits to maintain starter circuit in "run" position for 2–4 s after loss of voltage.
Control relays Mechanically latched relay	Voltage interruption	Retains control circuit condition during loss of voltage.
Filters, tuned circuits	Voltage or harmonic distortion, noise	
Engine generator set	Voltage interruptions B and C (see Table 14-4)	Provides emergency power for lighting or critical loads. Normally requires minimum of 5–45 s to start if automatic.
Motor-generator set[b]	All except voltage interruptions B and C (see Table 14-4), extended frequency change	Loss of voltage ride-through capability with flywheel: 0.3 s with deviaton less than –3% voltage, –0.5 cycle, or 1.8 with deviation less than –3% voltage, –1.5 cycles
Uninterruptible power supply (UPS), static system, or motor-generator set	All	Total isolation from power system disturbance for loads up to about 400 kVA. Provides power for 15–30 min after loss of voltage. A UPS system contains a rectifier, inverter, and battery (or motor-generator sets with battery) to supply ac power.
Voltage stabilizer, ferroresonant voltage regulator, static VAR compensator, switched shunt reactor and capacitor[c]	Voltage level change, voltage swell or sag, voltage transient, voltage unbalance, voltage flicker	Static device. Holds constant output voltage with voltage input variations up to ±30%. Full correction in 0.5 cycle. Limited to loads below 1800 kVA.

Copyright © 2001 IEEE. All rights reserved.

Copyright The Institute of Electrical and Electronics Engineers, Inc.
Provided by IHS under license with IEEE
No reproduction or networking permitted without license from IHS
Not for Resale

Table 14-5—Minimizing the effect of power system disturbances

Device	Minimized disturbance	Comment[a]
C. System one line diagram		
Rearrange or add equipment	All	Use of reactors, bus ties, etc., can minimize flicker on critical loads. Emergency separation of critical and noncritical loads.

[a]The solution to any disturbance may result in side effects, which are equally disturbing. For example, capacitors switched without preinsertion surge-limiting resistors may create damaging transient overvoltages; or improperly installed or grounded shield communications cable may cause other types of noise or burnout due to power-fault induced currents.
[b]Improved performance results from addition of a flywheel.
[c]May contain harmonic distortion in regulated voltage.

Each improvement also adds to the cost and space requirements that should be warranted by the process requirements or for personnel safety. Refer to the IEEE Std 493-1997 for economically evaluating the options for improving system reliability. Refer to IEEE Std 519-1992 and IEEE Std 1100-1999 for evaluating harmonic distortion limits and equipment limits.

14.4 Supply-line protection

Protective devices and relays are applied to the utility interconnection circuits in the same manner and employing the same principles as in all other locations in industrial plant power systems and utility systems (see IEEE Std C37.95-1989). The basic purpose is to clear faults and other abnormal conditions from the system as quickly as practicable to cause minimal disruption to the plant. Protective relays, fuses, and other devices provide this function by initiating the proper switching at the designated time under abnormal electrical conditions. A prerequisite to the use of protective relays is the presence of suitable sensing devices (e.g., instrument transformers) and suitable switching devices (e.g., circuit breakers, motor-operated switches). Therefore, selection of a protective relaying scheme is inherently dependent on the circuit arrangement as well as the equipment and processes to be protected and the service continuity needed.

Relays and other protective devices are used to detect faults and to detect abnormalities in voltage and frequency (e.g., overvoltages, undervoltages, single-phasing, underfrequency). Protective relay settings and fuse sizes are determined and coordinated with utility protective devices to isolate the faulted segment of the system as quickly as possible to permit the unfaulted part of the system to continue to operate. Methods of restoration of service after loss of voltage are tabulated in Table 14-6.

Copyright © 2001 IEEE. All rights reserved.

Copyright The Institute of Electrical and Electronics Engineers, Inc.
Provided by IHS under license with IEEE
No reproduction or networking permitted without license from IHS
Not for Resale

Table 14-6—Restoration of service after loss of voltage

Method	Minimum time to restore service	Comments
Reenergize circuit[a] Automatic reclosing after temporary fault Remote-controlled reclosing of circuit breakers or switches Manual or remote-controlled reclosing after manual isolation of cause of disturbance; replace fuses	Cycles Up to 1 min Up to 1 h or longer	High-speed bus transfer schemes are available for controlled reclosing when the system and plant motors are in phase. If motor loads exist that support plant voltage after loss of system voltage, then reclosing should be delayed either for a definite time or until residual plant voltage has decayed to less than 25% normal, or as recommended by manufacturer to prevent damage to motors. (See McFadden et al. [B9] and Gabba et al. [B4].)
Transfer incoming line to alternate power source[b] Automatic transfer Manual transfer	Cycles Minutes to hours	High speed automatic transfers may prevent equipment shut down (See McFadden et al. [B9] and Gabba et al. [B4].) Intentional time delay may eliminate unnecessary transfer under some conditions.
Start generators in consumer system	Variable	Standby generation may be sufficient to supply emergency or critical loads.

[a]Reclosing should include resynchronizing if consumer generators are operating in parallel with utility system.
[b]May include transfer of emergency lighting and loads to a battery source or engine-driven generators.
CAUTION—Automatic or remote reclosing should not be applied on circuits consisting of cables or transformers where reclosing reinitiates the permanent faults associated with such equipment.

The details of protecting specific devices are covered in other chapters of this recommended practice. The discussion of protective devices in this chapter centers on the specific applications in service supply lines as indicated on the sample circuit arrangements. Surge arresters are also important to incoming circuit protection.

The application of surge arresters for equipment protection is covered in IEEE Std 141-1993, IEEE Std C62.22-1997, and IEEE Std C62.92.3-1989. Considerations for the voltage rating of the arresters on the utility side should include the possible conditions of when the grounding source at the utility may be lost (e.g., utility station breaker opens) and when the utility transmission (or distribution) system may become ungrounded on the delta side of the transformers while still being fed from other generation sources. Consideration for locating arresters should include protecting the utility service switch or breaker during maintenance by locating the arresters on the utility side, protecting equipment such as transformers by locating arresters as close as practicable to the terminals, and protecting the equipment from

Copyright © 2001 IEEE. All rights reserved.

Copyright The Institute of Electrical and Electronics Engineers, Inc.
Provided by IHS under license with IEEE
No reproduction or networking permitted without license from IHS
Not for Resale

lightning strikes particularly for overhead lines. Typical applications are shown on typical systems illustrated in this chapter.

The development of the protection plan is best accomplished by dividing the electrical facilities into primary and backup zones of protection, each of which can then be protected simply and by using various specialized protective schemes. Some of the considerations in the application of protective relaying include

- Electrical characteristics of the utility supply circuits, especially fault-current distribution
- Load continuity requirements and capacities
- Equipment damage
- Duration of fault and associated voltage sag
- Probability of system disturbances due to factors such as exposure, circuit length, or type of equipment
- Utility standard requirements established to ensure maximum quality service to consumers
- Available protective equipment with due consideration to economics
- Motor and generator stability and other pertinent load characteristics
- Reclosing requirements
- Fault-locating requirements
- Physical layout
- Maintenance requirements

Protective schemes used in an industrial plant in combination with service supply lines are described according to their locations in an industrial utility tie line under seven groups (see also Figure 14-4):

Group	Protective scheme
A	Supply-line
B	Service-entrance
C	Supply transformer
D	Transformer secondary
E	Plant feeder circuit
F	In-plant generator
G	Bus relaying (not shown)

These protective device locations are not always well defined due to differences between installations, and in some cases one or more groups may be nonexistent. For example, when the utility supplies power at 208Y/120 V, 480Y/277 V, or even 4.16 kV or higher, no transformer is required and Group C is omitted. Group D is omitted when no secondary protection circuit breaker exists, and Group F is present only with in-plant generation. Protective

Copyright © 2001 IEEE. All rights reserved.

--`,,`-`-`,,`,,`,`,,`---

Copyright The Institute of Electrical and Electronics Engineers, Inc.
Provided by IHS under license with IEEE
No reproduction or networking permitted without license from IHS
Not for Resale

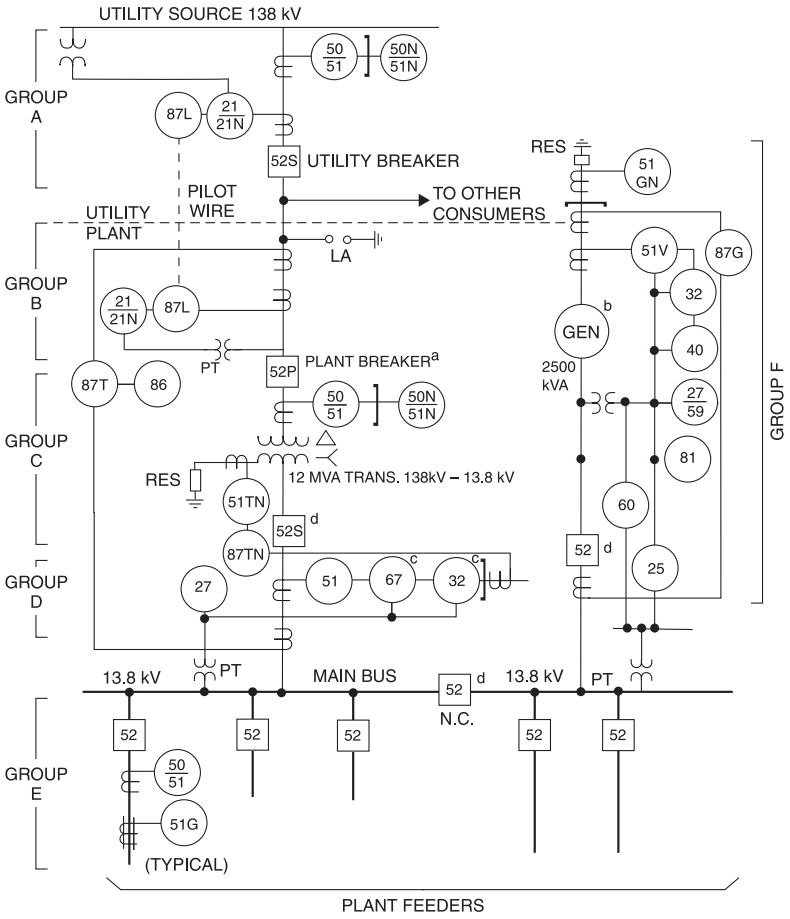

NOTES:
a. A fused interupter switch may also be used instead of the breaker.
If fused interrupter is used, relaying associated with the 12 MVA transformer is not used.
b. In-plant generator for partial plant load and back-up (detail generation protection shown in Ch-12).
c. Devices 67 and 32 are directional. Polarity of CTs and PTs must be verified.
d. Overcurrent and bus differential protection should be provided for the main, generator, and tie breakers, but protection is not shown here. See IEEE Std. C37.95 and C37.97.

Figure 14-4—Grouping of protective schemes

devices that are often supplied for protection of each group are discussed in 14.4.1 through 14.4.7. A portion of the protective equipment described is shown in Figure 14-4 through Figure 14-10 (see 14.5.1 through 14.5.6).

While protective relaying is emphasized in this chapter, series tripping (e.g., molded-case circuit breakers) or fusible protective devices may also be considered. In circuits of 600 V

Copyright © 2001 IEEE. All rights reserved.

Copyright The Institute of Electrical and Electronics Engineers, Inc.
Provided by IHS under license with IEEE
No reproduction or networking permitted without license from IHS
Not for Resale

and less, these two types of protection are more common than protective relays. However, for solidly grounded systems 600 V and less, ground-fault protective relaying is now used extensively to protect for arcing ground faults. In many plants with low- and medium-voltage (i.e., 480 V to 69 kV) distribution, fused interrupter switches are used because of their simplicity, lack of dependence on battery control power, and low maintenance. Solid-state multifunction protection relays are becoming common for feeder, transformer, and generator protection. The individual function numbers are shown on the illustrations in this chapter, but the features may be included in one protective relay.

The broader connotation of system protection, rather than protective relaying, is important at the interconnection between the consumer and the utility. This broader term carries the additional responsibility of automatic service restoration when warranted, separation of the more critical loads from less critical loads that can be shed when the main service from the utility is lost for any reason, and similar sophisticated control schemes designed to make the maximum utilization of the utility service even during periods of partial inadequacy. Identification of the general area of a fault through relay targets or open fuse indication to minimize operating confusion and downtime is also part of this concept. Solid-state relays have communication ports that can be tied into the plant's programmable logic controller or distributed control system for remote-monitoring of factors such as the relay status, breaker status, metering information, or event recording to reduce outage time or prevent outages.

14.4.1 Group A, supply-line protection

The protective equipment at this point is on utility premises and is usually a utility property. Its primary purpose is to protect the main utility circuit from the adverse effect of faults between the utility circuit breaker and the service-entrance equipment. The goal is to clear faults on the lines quickly, rather than jeopardize the service of all users supplied from the source bus. Another function is to back up the service-entrance relaying and prevent an in-plant disturbance from affecting the utility source bus. Relays commonly employed at this point are as follows:

a) Time and instantaneous overcurrent phase- and ground-fault relays (Device 50/51 and Device 50N/51N) are used whenever practicable because of simplicity and economy.

   Extremely inverse relays are sometimes used when coordination with fuses is needed or when accommodating high inrush currents is necessary upon restoration of power after a service outage. Very inverse-, inverse-, or definite-time relay characteristics can also be used for a variety of reasons (e.g., when the short-circuit current magnitude is dependent largely on system-generating capacity at the time of fault). When the utility uses a definite-time relay on the industrial service line, a less inverse relay characteristic on the industrial system may be preferred.

   Instantaneous relays (Device 50) should be employed only where downstream coordination is not required. These relays should be set to pick up at a current level high enough so that they do not operate for the maximum asymmetrical fault at the location of the next downstream overcurrent protective device, i.e., typically 1.6 times the symmetrical fault current at that location. However, instantaneous line

Copyright © 2001 IEEE. All rights reserved.

Copyright The Institute of Electrical and Electronics Engineers, Inc.
Provided by IHS under license with IEEE
No reproduction or networking permitted without license from IHS
Not for Resale

relays often reach into, but not through, load transformers connected to that line. In some applications involving short lines, instantaneous relays cannot be coordinated and should not be used.

b) Distance relays (Device 21) are used by a utility company to get fast, sensitive protection over most of the length of the supply line to the industrial plant. The types of distance relays include impedance, reactance, offset mho, and mho. Distance relays are considerably more expensive than overcurrent relays. A distance relay measures impedance using the current and voltage of a transmission line to determine whether a fault exists within or outside its operating zones. These relays can be obtained with one to three zones of operation. The first zone provides instantaneous protection for up to about 80% to 90% of the protected line. The second and third zones, if used, are time delayed and extend backup protection into the area protected by the service-entrance relays.

   Distance relays are sometimes necessary when achieving reasonably fast operation with overcurrent relays is impossible because of the long time needed to get selective tripping over a wide variation of fault-current magnitudes. They may also be needed where the ratio of fault current to load current is too low to use overcurrent relays. Distance relays can usually be applied on lines of any length. However, where very short lines are involved, factors such as relay range limitations, minimum operating currents, and arc resistance may preclude the use of distance relays; and pilot relay systems should be considered to provide fast, selective protection on 100% of the line.

   Distance-controlled overcurrent relays (Device 51 and Device 21) can be used in combination to provide fast tripping for faults on the primary of supply transformers, plus backup time delay for low-side faults with some limitations. This combination is useful where overcurrent relays alone cannot be set to respond to transformer low-side faults.

c) Pilot relay systems (Device 87L) employ a communication channel in conjunction with protective relays in order to compare the circuit conditions at both ends of the protected line simultaneously. This relay system can thus provide fast protection over 100% of the line. This relay system determines whether the fault is within the protected line or external to it.

   Additional relaying should be considered for backup protection.

   Pilot relay systems used on lines to consumer plants are frequently of the pilot-wire line differential (Device 87L). These relays measure the current in both ends of the line differentially and detect an internal fault by differences between in and out current. Metallic pairs are sometimes used as the communication channel for this relaying. Metallic pilot wires are limited in distance to a maximum of roughly 16 km to 24 km, depending on the size of the pilot wire used. Pilot wire relays can also be used with other communication equipment, such as fiber optic cables or audio tone by installing special interface equipment. Optical fiber cables are in common use today.

   Other types of pilot relaying systems used for tie-line protection include directional comparison blocking, directional comparison overreaching transfer trip, directional

Copyright © 2001 IEEE. All rights reserved.

--`,,`,,`,,`,,`,,`---

Copyright The Institute of Electrical and Electronics Engineers, Inc.
Provided by IHS under license with IEEE
No reproduction or networking permitted without license from IHS
Not for Resale

comparison unblocking, directional comparison underreaching transfer trip, directional wave comparison, segregated phase comparison, single-pole-selective-pole, permissive overreach transfer trip, direct transfer trip, permissive underreach transfer trip, current differential protection, and phase comparison. A description of these schemes is found in *Applied Protective Relaying* [B1] and Blackburn [B2].

When selecting the basic relay types, the training and experience of the available personnel should be considered. This review includes the ability to calculate the proper settings to attain the desired results and the qualifications of test personnel who are going to commission and maintain the relays.

14.4.2 Group B, service-entrance protection

Where service-entrance relaying is used, it normally operates the main interrupting device. However, when fuses are used, the fuse provides the functions of both sensing and interrupting. Service-entrance protection is commonly provided by the consumer. In this case, the required characteristics and settings should be selected based on selective operation of the consumer and utility protective devices and, when applicable, on the pertinent governmental codes. Refer to Chapter 8 for ground-fault relaying and to the requirements of the National Electrical Code® (NEC®) (NFPA 70-1999).

Service-entrance protective devices function to disconnect the supply line from the consumer's system for certain faults within the supply transformer primary and secondary connections and to serve as a backup to the protective devices associated with the transformer secondary or utility supply line.

Several schemes can be used to open the utility supply circuit breaker within Group A when no primary circuit breaker is at the plant and the fault currents are not sufficient to operate the relays of Group A. This goal is accomplished by using a high-speed grounding switch or by employing transferred tripping schemes through the use of pilot wire, power-line carrier, audio tone, or microwave signals. Generally, these methods of tripping of the utility line breaker would be permitted only if the line serves one consumer. Where the line serves several consumers, each consumer is responsible for clearing faults in its system without interrupting service to the other consumers. In these cases, a circuit breaker or other fault-interrupting device is required at the plant.

Typical protective devices associated with Group B are as follows:

a) Time and instantaneous overcurrent phase- and ground-fault relays (Device 50/51 and Device 50N/51N) are applied similarly to the overcurrent relays described in 14.4.1 a). These relays provide backup protection for the transformer, medium-voltage bus, and secondary-side phase-overcurrent relays. Overcurrent phase and ground relays also provide backup for the transformer differential relays and should, therefore, use alternate tripping auxiliaries and power supplies. Where fuses are used for overcurrent protection, they should be selected to coordinate with the utility's protective devices and downstream devices.
b) Directional phase-overcurrent relays (Device 67) differ from nondirectional relays in that they require voltage polarization, which allows them to respond to faults in one

Copyright © 2001 IEEE. All rights reserved.

Copyright The Institute of Electrical and Electronics Engineers, Inc.
Provided by IHS under license with IEEE
No reproduction or networking permitted without license from IHS
Not for Resale

direction. When applied for service-entrance protection, directional phase relays look into the utility system and detect faults on incoming lines. The principal function of these relays is to initiate prompt clearing of such supply-line faults from the consumer load bus when backfeed from another source or generator occurs. Directional phase relays do not respond to normal load currents or faults on the consumer bus or plant distribution feeders, and this directional selectivity allows for sensitive settings that would not be possible with conventional time-overcurrent relays.

Directional relays are recommended at an industrial plant when it is served by two or more utility feeders in parallel or when in-plant generation is in parallel with the utility supply lines. These relays are located at the service entrance when no transformation is at the industrial plant. With transformation, the directional relays are normally located at the secondary circuit breaker, and the relays for Group B and Group D are combined in this case. Some utilities accept consumer surplus power from the in-plant generators. In such cases, voltage-restrained directional overcurrent, voltage-controlled overcurrent, distance, or distance-supervised overcurrent relays may be used to distinguish between load and fault current. Close communication with the utility company engineers is necessary in the selection of relay characteristics and settings so that the protection system is compatible with both the utility system protection and plant operating requirements (see Smith [B10]).

Directional overcurrent ground-fault relays (Device 67N) may be used in addition to directional phase-overcurrent relays (Device 67) for the complete protection of incoming lines for grounded systems. These relays may be required at the line terminals of the industrial plant when paralleling incoming lines or when ground-fault current sources exist in the customer's facility. When the industrial plant is served by a delta-wye transformer, a Device 67N relay is not used on the delta side because no local ground-fault current source exists to supply line-to-ground fault current. The Device 67N relay requires zero-sequence current or voltage polarizing. Other devices may be used to protect the utility (see IEEE Std C37.95-1989).

c) A ground-fault detector relay (Device 64) may be needed to clear a supply-line ground fault by disconnecting the supply line at the consumer end. This situation can occur when there are parallel supply lines or in-plant generation, with delta-wye supply transformers. When the utility end is opened by overcurrent relays during a ground fault, the system ground current source is also removed; and the supply line then operates as an ungrounded system from the industrial plant. Overvoltage and undervoltage relays connected to a line-to-ground voltage transformer (VT) or an overvoltage relay connected to the broken-delta secondary of the line-to-ground VTs can be used to detect ground faults under this condition. These relays function only if ground-fault current is sustained through the system capacitance after the utility supply breaker opens. If the fault is cleared, the voltage relays do not operate. The phase-to-ground windings of the VTs used for this scheme should be rated for line-line voltage. Alternately, a sensitive directional power relay (Device 32) as described in 14.4.4 e) can accomplish the same purpose.

d) The consumer terminal of pilot relay systems (Device 87L), as described in 14.4.1 c), can be used for service-entrance protection and functions to trip the Group B circuit breakers and the utility supply circuit breakers.

Copyright © 2001 IEEE. All rights reserved.

--`,,`,,`-`-`,,`,,`,`,,`---

Copyright The Institute of Electrical and Electronics Engineers, Inc.
Provided by IHS under license with IEEE
No reproduction or networking permitted without license from IHS Not for Resale

e) Service reliability on systems 600 V and below may be improved by using current-limiting cable limiters on each end of each service cable where there are three or more cables per phase. The limiters clear faults on individual cables and allow the service to be maintained through the remaining cables assuming the latter have sufficient capacity to carry the load.

14.4.3 Group C, supply-transformer protection

Transformer protection is listed separately even though some of the protection is provided by the circuit breakers and relays or fused devices (covered in Group B and Group D) and Chapter 11 in this recommended practice is devoted entirely to transformer protection. Nevertheless, the basic protective devices are described briefly:

a) Time and instantaneous overcurrent phase- and ground-fault relays (Device 50/51 and Device 50N/51N) are described in 14.4.1 a). These relays should be applied on the primary side of the transformer. Where fuses are used for overcurrent protection, they should be selected to coordinate with the upstream protective devices and downstream devices.

b) Transformer differential relays (Device 87T) provide fast clearing for phase-to-phase and phase-to-ground faults. Differential protection is almost universally applied to large (i.e., above 5000 kVA) or important transformers when a primary circuit breaker or circuit switcher is used. Harmonic-restraint relays are used to allow greater sensitivity, but not operate on magnetizing inrush currents. These differential relays are arranged to cause both the primary and the secondary circuit-switching devices to trip and lock out through a lockout relay (Device 86). For low-resistance-grounded transformers, transformer neutral differential protection (Device 87TN) should be considered to adequately protect for low-side ground faults in the differential zone.

c) Pressure relays (Device 63) have gained acceptance as reliable devices for large power transformers (i.e., 1000 kVA and larger). They are applicable to all transformers that have a sealed gas chamber above the oil level. They are sensitive to internal turn-to-turn faults and are particularly useful for faults in tap-changing equipment. They can be used to supplement the transformer differential relays.

d) Transformer oil temperature relays (Device 26) are routinely applied to all liquid-filled transformers. Transformer winding temperature relays (Device 49) are usually provided with larger (i.e., 1000 kVA and above) power transformers. These devices are essentially for overload protection and in many applications merely indicate alarm or activate cooling apparatus. They protect against excessive transformer temperatures. Refer to IEEE Std C57.91-1995.

14.4.4 Group D, transformer secondary protection

If no transformation occurs, transformer secondary relays are not involved. Relaying or protection at this location also varies with the number of transformers used, whether generation is in plant, and other similar considerations. Basic transformer secondary protection includes the following:

Copyright © 2001 IEEE. All rights reserved.

Copyright The Institute of Electrical and Electronics Engineers, Inc.
Provided by IHS under license with IEEE
No reproduction or networking permitted without license from IHS
Not for Resale

a) Time-overcurrent phase relays (Device 51) at the transformer secondary are required to protect for bus faults and to back up the in-plant feeder overcurrent relays. These relays should be coordinated for maximum load conditions and should coordinate with plant feeder relaying, bus tie relaying, and the transformer overcurrent relaying. Where fuses are used for overcurrent protection, they should be selected to coordinate with the upstream protective devices and downstream devices. Instantaneous units (Device 50) cannot be used for transformer secondary protection without loss of selectivity between main and feeder relaying (see Mathltr [B8]). Therefore, if high-speed protection for bus faults is desired, bus differential relays (Device 87B) should be used. Residually connected overcurrent ground relays (Device 51N) may also be eliminated if the transformer neutral ground relay (Device 51TN) is used.

b) A transformer neutral ground relay (Device 51TN) is connected to a current transformer (CT) in the grounded neutral lead of the transformer secondary. This relay backs up plant feeder ground-fault relays. This relay should trip both the primary and secondary breakers because both must be opened to clear faults in the secondary winding, in the connections to the secondary breaker, or in the secondary breaker. The CT for the Device 51TN relay should be on the transformer neutral bushing so that a ground in the neutral resistor does not prevent relay operation.

   Device 51 and Device 51TN provide protection for bus faults when bus differential relays are not specified. However, it should be noted that these relays do not selectively relay a faulted bus section through the bus tie breaker if the tie breaker is not equipped with overcurrent relays. The ability to coordinate for bus faults is achieved by adding bus tie overcurrent relays or using dedicated bus relaying for each bus section. To selectively trip the main and tie breakers for bus faults, partial differential relay protection should be considered on the main and tie breakers. See IEEE Std C37.95-1989 for an illustration of this type of protection.

c) In a low-resistance-grounded system, the transformer differential relay sensitivity may be unable to recognize the low-side line-to-ground fault. In such cases, a differential ground relay scheme (Device 87TN) should be used (see Chapter 8 on ground-fault protection and Chapter 11 on transformer protection).

d) Directional overcurrent phase relay (Device 67) can be useful in dual-service arrangements, and the general comments of 14.4.2 b) apply to transformer secondary protection as well. In addition, installations with in-plant generation utilize directional relaying at Group D to clear faults in the supply circuit or supply transformer from in-plant generator and bus sources.

   The directional overcurrent ground relay (Device 67N) may also be applied to the transformer low-voltage side, particularly where the ground-fault current is limited by resistance grounding of the transformer neutral.

e) A directional power relay (Device 32) can be used to disconnect the incoming line and the supply transformer when the utility end opens during parallel operation or when generation is in plant, but has insufficient current to operate a Device 67 relay. A sensitive power relay can be set to detect core power loss when the transformer is energized from the secondary side. The reverse-power relay is also used to separate the plant if the plant generation becomes isolated (i.e., islanded) with part of the utility load. However, if the utility buys power from the plant, this relay cannot be used because of the normal power flow out of the terminal.

 Copyright © 2001 IEEE. All rights reserved.

Copyright The Institute of Electrical and Electronics Engineers, Inc.
Provided by IHS under license with IEEE
No reproduction or networking permitted without license from IHS Not for Resale

14.4.5 Group E, plant feeder circuit protection

Feeder relaying is selected on the basis of the type of load, type of circuit, and general degree of protection required. Some examples of Group E protection are shown in Figure 14-6 through Figure 14-10. The detailed considerations for load circuits are covered elsewhere in this publication.

14.4.6 Group F, in-plant generator protection

The presence of in-plant generation adds flexibility and reliability to the consumer's electrical supply sources, but it also adds certain complexities in protection and control. The additional protection often needed includes standard generator protective relaying described in detail in Chapter 12 and in IEEE Std C37.101-1993 and IEEE Std C37.102-1995. A typical small unit has the following generator protection:

a) Overcurrent relays with voltage restraint (Device 51V) are used to trip the generator if a system fault has not been cleared by other protective devices. As described in Chapter 12, a sustained fault can result in generator currents that are less than the rated load current of the generator. Because the generator terminal voltage is reduced during fault conditions, but maintained during normal load conditions, a voltage-controlled or voltage-restrained overcurrent relay may be used to provide this backup protection. This characteristic allows the overcurrent element of the Device 51V relay to trip for currents lower than generator full-load rating when the voltage is lower than nominal.

   A distance relay (Device 21) can also be used to provide generator backup protection if it can be coordinated with other relays in the plant.

b) Generator neutral ground time-overcurrent relay (Device 51GN) can be used in much the same manner as the transformer neutral ground relay [see 14.4.4 b)] if the generator is impedance- or low-resistance-grounded. Generators are not normally effectively grounded because the mechanical bracing may be limited for three-phase fault currents, not the higher line-to-ground fault currents. If the in-plant generator is to parallel the transformer, the type of grounding could be either the same as the transformer or high resistance. In the latter case, care should be exercised in selecting line-to-line voltage rating on the potential transformers used for protection and synchronizing and for selecting the surge protective device rating. Furthermore, a voltage relay would be used for ground detection on a high-resistance-grounded neutral. Surge protection should be provided at the generator. Generator neutral grounding protection is further discussed in IEEE Std C37.101-1993 and IEEE Std C37.102.1995.

c) Generator differential relays (Device 87G) protect for faults in the generator or generator leads. This relay should have sufficient sensitivity to detect ground faults. Depending upon the location of the fault in the generator, the Device 87G relay may not be able to detect ground faults. Faults near the neutral connection of the winding may be undetectable for common settings of the Device 87G relay. For low-resistance-grounded generators, a generator ground differential relay (Device 87GN) may also need to be installed to adequately protect the generator for ground faults.

Copyright © 2001 IEEE. All rights reserved.

Copyright The Institute of Electrical and Electronics Engineers, Inc.
Provided by IHS under license with IEEE
No reproduction or networking permitted without license from IHS
Not for Resale

d) Frequency relays (Device 81) can be used to operate at preselected frequencies to drop load or sectionalize buses in order to keep remaining generation and load in operation during disturbances. For load shedding, time delays of 6 cycles to 30 cycles (inverse frequency) may be used to shed load or sectionalize on transient or temporary conditions. Time-delay settings of 1 s to 2 s are common to allow the system to stabilize for normal load changes. Solid-state frequency relays with two inverse-time characteristics can be used for this purpose. Generators are subject to overspeeding following loss of load. In most cases, the governor quickly restores the frequency to a near normal value, depending on its setting. However, overfrequency relaying is sometimes used to provide protection for the generator. The manufacturers of combustion and steam turbines and generators should be consulted for the system frequency and voltage operating limits.

   An underfrequency condition can occur during a major disturbance on the utility system. During this condition, underfrequency relays can be employed to separate plant generation and critical load from the utility. Underfrequency conditions can also result from the loss of the utility tie with inadequate generation to carry the plant load. In this case, underfrequency relaying may be used to drop nonessential plant load in order to match load with generation or to protect a turbine-generator from the detrimental effects of underfrequency operation.

   When energy is delivered into the electric supply system, overfrequency and underfrequency relays with overvoltage and undervoltage relays may be required to open the supply system tie if the plant generation is islanded with part of the supply system or utility load. These relays are often required by the electric supplier or utility when the plant has local generation to prevent excessive frequency and voltage excursions on the electric supply or utility system or to island the facility to maintain plant operations (see IEEE Special Publication 88TH0224-6-PWR [B5]).

   Frequency and undervoltage relays may also be needed to disconnect the utility service when the supply line is equipped with automatic reclosing. For automatic reclosing, the consumer's main circuit breaker is tripped to protect synchronous or large induction motors and generators.

14.4.7 Group G, bus relaying

Bus and switchgear relaying is covered in Chapter 13 of this recommended practice and in IEEE Std C37.95-1989 and IEEE Std C37.97-1979.

14.5 Examples of supply-system protective schemes

Six typical schemes have been selected for detailed analysis in 14.5.1 through 14.5.6, and one-line diagrams showing protective relays have been prepared to illustrate these schemes. The protective relaying is discussed with cross reference to protection Group A through Group G, which appear to the left of the diagrams. These schemes should not be considered as preferred or recommended schemes, they are merely examples of various utility tie arrangements with suggested relaying. Additional relaying or different configuration of utility tie may be used depending on consumer requirements and serving utility.

Copyright © 2001 IEEE. All rights reserved.

Copyright The Institute of Electrical and Electronics Engineers, Inc.
Provided by IHS under license with IEEE
No reproduction or networking permitted without license from IHS Not for Resale

The electric supply system for an industrial plant should be designed to fulfill the particular needs of the individual plant (see Linders [B7]). For example, duplicate service equipment may be needed for an industrial process requiring a highly reliable supply of electric power.

14.5.1 Network supply systems below 600 V

In some areas, the utility tariffs permit supply of power at secondary voltages only, and all higher voltage equipment is owned and installed by the utility on the consumer's premises. An example of this type of installation is shown in Figure 14-5. The arrangement is a network system with the sources supplying network transformers operated in parallel on a common service bus. With this type of installation, network protectors are required and are supplied by the utility to segregate a faulted line or transformer from the service bus (see IEEE Std C37.108-1989). The network protectors perform three basic functions in the system. They automatically isolate the fault in the primary feeder or network transformers without dropping load; isolate ground faults in the primary feeders in a single-ended grounded delta-wye network transformer; and, on predetermined voltage conditions, automatically close the network protector breakers.

Spot networks are used to provide a high level of service reliability. However, such service may have higher available low-voltage fault currents than would be experienced by a service of the same load capacity where the secondary of the supply transformers is not operated in parallel. In spot network service, a device known as a secondary network protector is connected between the secondary of the supply transformers and the secondary bus. A network protector is an integrated device consisting of controls, protection, and an interrupter. Its requirements are given in IEEE C57.12.44-2000.

Normally, a network protector is not listed by an independent testing authority and thus is generally not considered for industrial or commercial use. However, it is sometimes used by service providers such as utilities. If an industrial or commercial user wishes to install a spot network that is not under the control of a service provider, such as a utility, then listed equipment shall be installed that performs the same functions as described in IEEE Std C57.12.44-2000. In the selection of a spot network versus some other means of supply, consideration has to be given to the level of reliability of service desired, fault-current levels, and insulation materials used in the secondary electrical service. A network can provide better voltage regulation than a non-network supply system, but the network supply may have higher fault currents. For faults on the secondary system, consideration should be given to the arc energy and the fault mechanical forces caused by the fault current. Non-network or secondary bused systems would normally have lower fault currents (see Smith [B11]).

NOTE—Recent research conducted by the Electric Power Research Institute (EPRI) has determined that certain types of insulation with voids created due to aging, when subjected to conductive liquids, can achieve a coking condition that releases volatile gases. If the gases are not dissipated and an arc occurs, a condition may result in a manhole event. Some researchers believe that this event would not occur at low levels of perspective fault current. However, the coking condition is not a function of the perspective fault current, but a function of the resistance of the conductive path and the applied voltage.

In the example (see Figure 14-5), because the short-circuit current is extremely high, current-limiting fuses are necessary to limit this short-circuit current on the customer's equipment.

Copyright © 2001 IEEE. All rights reserved.

Copyright The Institute of Electrical and Electronics Engineers, Inc.
Provided by IHS under license with IEEE
No reproduction or networking permitted without license from IHS
Not for Resale

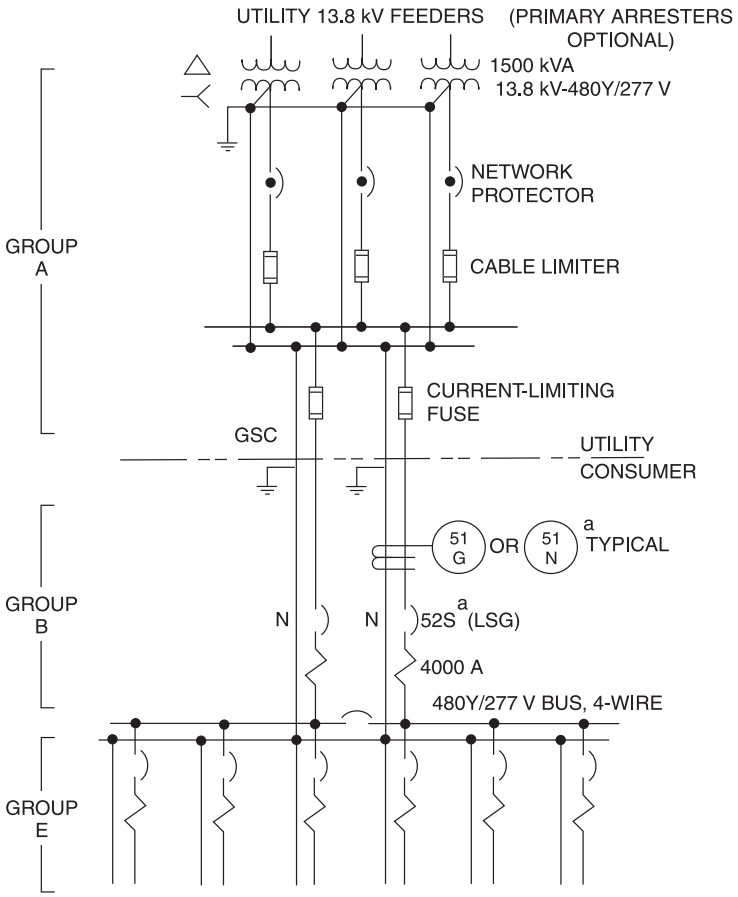

NOTE:
a. Low voltage power circuit breakers typically have 51N type of integral protection. The breakers should have long-time, short-time, and ground protection (LSG) with no instantaneous feature to achieve selectivity down stream.

Figure 14-5—Low-voltage network supply (480Y/277 V or 208Y/120 V)

However, if the let-through current on these fuses is high, current-limiting fuses may also be required on the plant feeder breakers. The plant engineer and the utility representative should carefully review the type and design of approved service-entrance equipment.

The protection required for the consumer's service-entrance equipment is largely regulated by national codes. Circuit breaker, service protector, switch, and fuse selections are governed by the continuous-current rating and number of service main circuits allowed. In addition to phase-fault protection, NEC Article 230-95 requires ground-fault protection for solidly grounded wye service entrances of more than 150 V to ground, but not exceeding 600 V phase to phase, rated 1000 A or more. Other system grounding requirements are in NEC Article 250. With few exceptions, the service grounded conductor connection to the

Copyright © 2001 IEEE. All rights reserved.

Copyright The Institute of Electrical and Electronics Engineers, Inc.
Provided by IHS under license with IEEE
No reproduction or networking permitted without license from IHS
Not for Resale

grounding electrode is required to be made on the source side of the service disconnecting means. Ground-fault protection is often recommended on grounded circuits because the phase protective devices usually provide little or no protection for low- to medium-magnitude arcing ground faults.

Air circuit breakers or other interrupting switches (Device 52S) in Group B may be provided with ground-fault protective devices in conjunction with phase-overcurrent devices, or separate ground-sensing relays (Device 51G) may be provided as shown in Figure 14-5. Normally, Device 51N is integral with the solid-state trip device of the breaker with long-time, short-time, and ground (LSG) protection built-in. Device 51N is most common in direct-acting trips on low-voltage power circuit breakers (LVPCBs), as the residual current from the three-phase current sensors are used. Ground-fault protection on the plant feeder disconnecting means may also be required to coordinate with the service-entrance disconnecting means. Refer to Chapter 8 for a complete discussion of ground-fault protection.

14.5.2 Fused primary and low-voltage plant bus

Many utilities permit their customers to own and operate higher voltage service-entrance equipment and the associated transformers. Figure 14-6 shows a simple service of this type of installation, which is adequate for small industrial customers. The fuse size on the transformer is limited to the maximum size that provides selectivity with the power company's overcurrent relays (in Group A, Device 50/51 and Device 50N/51N), secondary breaker (Device 52S) protective devices, and the NEC requirements for transformer protection. This selectivity is important to the utility to prevent interruption of service to other customers on the same line and to the plant loads.

No special relaying equipment is provided in Group B. A ground relay (Device 5lTN) is recommended in the transformer neutral circuit at location Group C to protect for ground faults between the Device 52S breaker and the transformer and for backup protection. Where the transformer is not close-coupled to the secondary circuit breaker, protection for this connecting circuit is dependent on fault clearing by the primary interrupting device, where Device 51TN should open the primary device. Because the transformer secondary is low voltage (i.e., 480Y/277 V), the protective devices at Group D are integrally mounted on the LVPCBs. If the transformer secondary is 480 V with a high-resistance ground, then the Group E protection should have only long-time and short-time (LS) protection with no instantaneous or ground protection.

Transformer primary fuses should be selected with due consideration to the reduced magnitude of secondary phase-to-ground arcing faults.

14.5.3 Single-service supply with transformer primary circuit breaker

Single-service supply with transformer primary circuit breaker (see Figure 14-7) is more expensive, but provides more protection than described in 14.5.2. The fused disconnect switch is replaced by a circuit breaker or circuit switcher (Device 52L) and protective relays. This is required when the transformer full-load requirements exceed the maximum

Copyright © 2001 IEEE. All rights reserved.

Copyright The Institute of Electrical and Electronics Engineers, Inc.
Provided by IHS under license with IEEE
No reproduction or networking permitted without license from IHS
Not for Resale

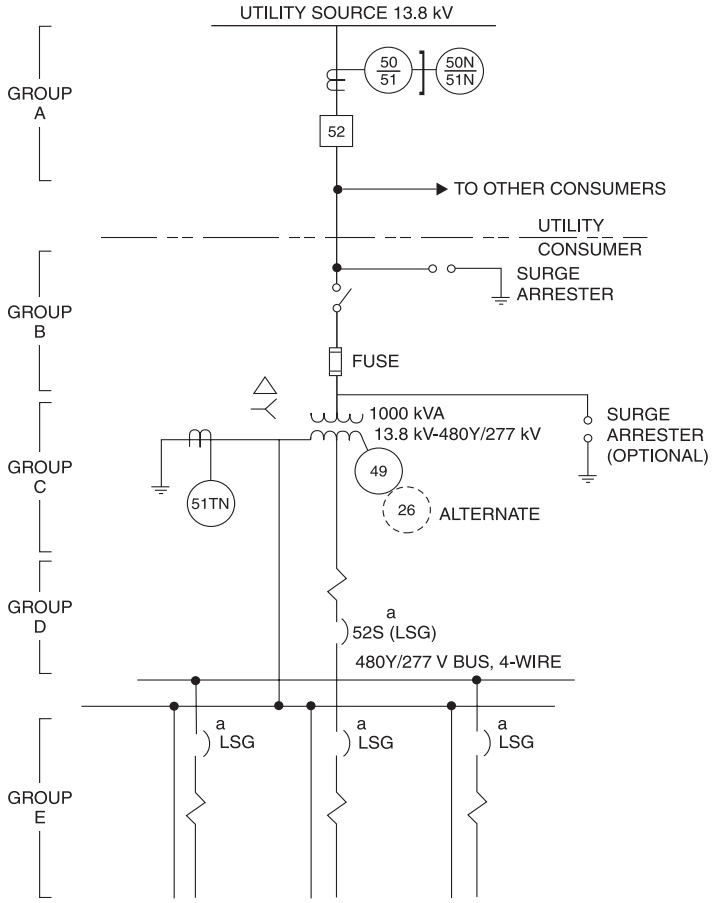

NOTE:
a. Low voltage power circuit breakers typically have 51N type of integral protection. The breakers should have long-time, short-time, and ground protection (LSG) with no instantaneous feature to achieve selectivity down stream.

Figure 14-6—Fused primary with low-voltage plant bus

permissible fuse size or when the available short-circuit current exceeds the fuse capability, such as for fused cutouts of low interrupting-current ratings. The high-side circuit breaker may also be justified to clear low-side ground faults, especially when resistance-grounded as shown in this arrangement. Some interrupter switches are also rated to handle this duty.

The service-entrance overcurrent relays (in Group B, Device 50/51 and Device 50N/51N) serve a dual purpose because they provide protection for the transformer and its low-voltage bus and provide backup protection for the plant feeders. The phase relays are set for the transformer loading requirements and to coordinate with the low-side bus and feeder relays. These relays should also coordinate with the utility relays of Group A. The instantaneous relay (Device 50) in Group B should not be set to reach through the transformer. The high-side

Copyright © 2001 IEEE. All rights reserved.

Copyright The Institute of Electrical and Electronics Engineers, Inc.
Provided by IHS under license with IEEE
No reproduction or networking permitted without license from IHS
Not for Resale

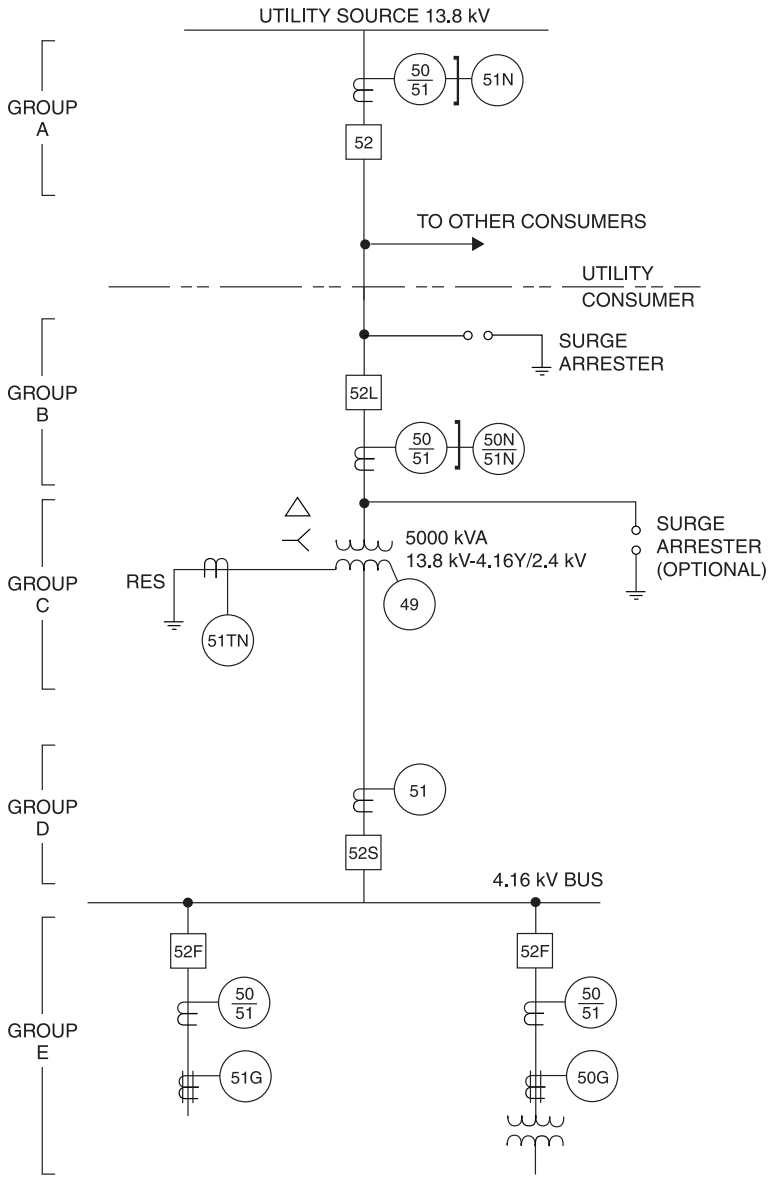

Figure 14-7—Single-service supply with transformer primary circuit breaker

ground relays (Device 51N/50N) may be set low and fast because they have no downstream coordination requirements.

Instantaneous relays (Device 50 and Device 50N) in Group A are usually set for the line requirements and should not overreach the consumer circuit breaker (Device 52L).

Copyright © 2001 IEEE. All rights reserved.

Copyright The Institute of Electrical and Electronics Engineers, Inc.
Provided by IHS under license with IEEE
No reproduction or networking permitted without license from IHS
Not for Resale

The transformer neutral ground-fault relay (Device 51TN) should trip the primary breaker (Device 52L) to clear 4.16 kV ground faults, which may not be detected by phase-overcurrent relays (Device 51).

14.5.4 Dual service without transformation

Figure 14-8 illustrates a method of utilizing a dual service from the utility. With this arrangement, one service circuit breaker or interrupter switch (Device 52S-1) may be normally open and the other service circuit breaker or interrupter switch (Device 52S-2) normally closed, or both may be operated closed. One reason for not operating in parallel in this instance is to minimize the short-circuit duty on the plants 13.8 kV bus.

With either Device 52S-1 or Device 52S-2 operated normally open, automatic transfer should be used to open the normal breaker and close the alternate breaker in the event of an outage of the normal supply line. Automatic transfer (Device 27) should be delayed to coordinate for any fault on other portions of the system because the voltage is depressed due to the fault until a circuit breaker or a fuse operates to clear it. Overcurrent blocking is utilized to lock out both source lines in the unlikely event that the normal service breaker trips due to a bus fault or to backup relay operation resulting from the failure of a plant feeder breaker. Because of the setting requirement placed by the utility on the overcurrent relays for incoming circuit breakers (Device 52S-1 and Device 52S-2), selectivity with the feeder circuit breakers (Device 52F) may be difficult to obtain. Selectivity would also depend on the instantaneous overcurrent relay (Device 50) at the utility source operating only for faults on the supply line.

As shown, Figure 14-8 includes directional overcurrent relays (Device 67 and Device 67N). These relays should be considered to permit parallel operation of the two supply lines and improved service continuity. For successful operation, coordinated settings are desired between Device 67/67N, Device 51/51N, and feeder relays at the consumer station and Device 51/51N at the utility source. Partial differential bus relaying may be provided to quickly clear a bus fault from the supply line. In this case, Device 27 would be used to permit manual or automatic reclosing of the Device 52S-1 or Device 52S-2 breaker when the utility line is energized.

Selectivity for faults on the utility system would significantly improve with the application of a pilot-wire scheme. Bus transfers could also use a fast transfer scheme if one of the circuits is normally an alternate source (see Gabba and Hill [B4]).

14.5.5 Dual service with transformation

Figure 14-9 illustrates a preferred dual-service scheme. With this arrangement, the industrial plant is protected not only from the loss of a supply line but, in addition, from the failure of a primary bus or transformer. The secondary buses are tied together through the normally closed tie breaker (Device 52B).

As shown in Figure 14-9, the high-voltage bus tie breaker (Device 52A) must remain normally open because the relaying is obtained from the low side of the transformers and the lines must not be tied together. Upon the clearance of either line, the tie breaker can be closed

 Copyright © 2001 IEEE. All rights reserved.

Copyright The Institute of Electrical and Electronics Engineers, Inc.
Provided by IHS under license with IEEE
No reproduction or networking permitted without license from IHS Not for Resale

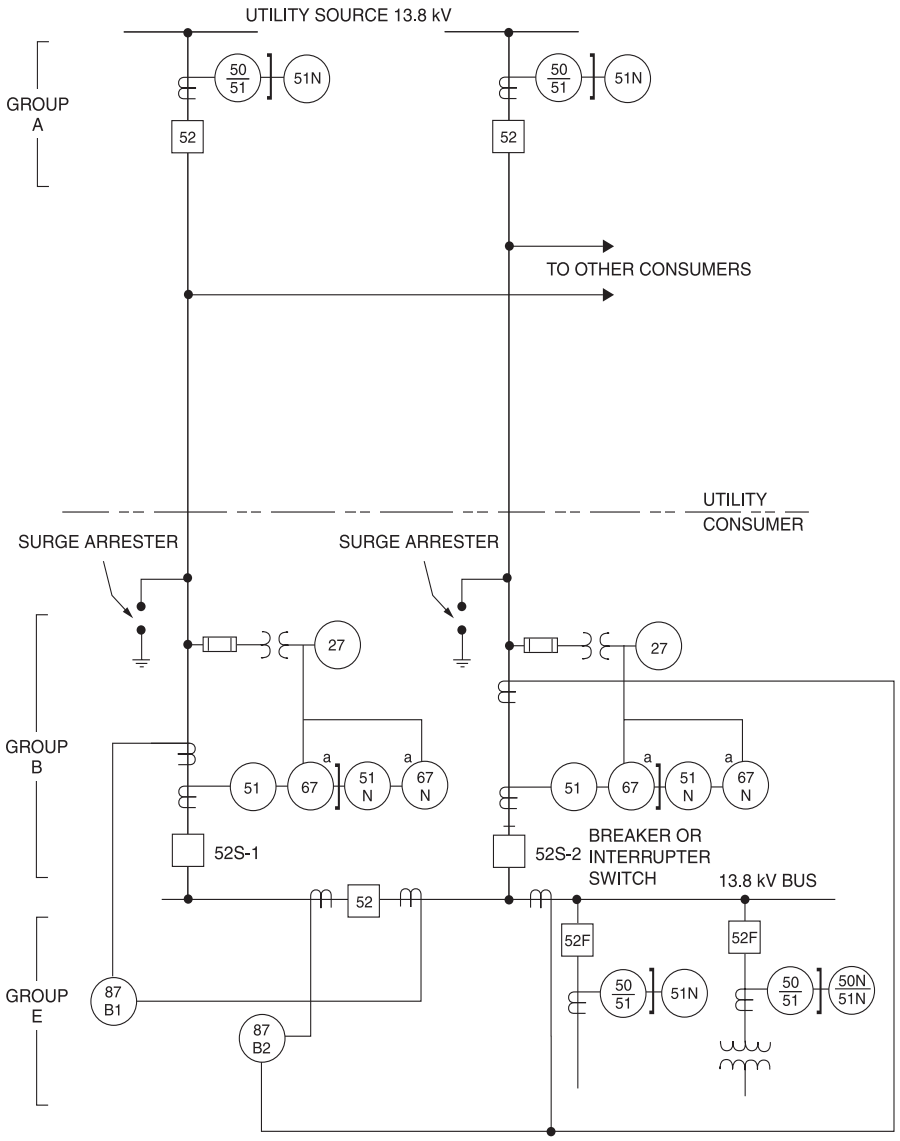

NOTE:
a. Devices 67 and 67N are directional. Polarity of CTs and PTs must be verified.

Figure 14-8—Dual service without transformation

to pick up both transformers from the remaining line. However, because each transformer should be sized to carry the total plant load, little justification exists for the cost of the normally open tie breaker for this purpose.

Redundant transformer differential relays are shown (Device 87T, Device 87T1, and Device 87T2) with Device 87T operating from the transformer high-voltage bushing CTs.

Copyright © 2001 IEEE. All rights reserved.

Copyright The Institute of Electrical and Electronics Engineers, Inc.
Provided by IHS under license with IEEE
No reproduction or networking permitted without license from IHS
Not for Resale

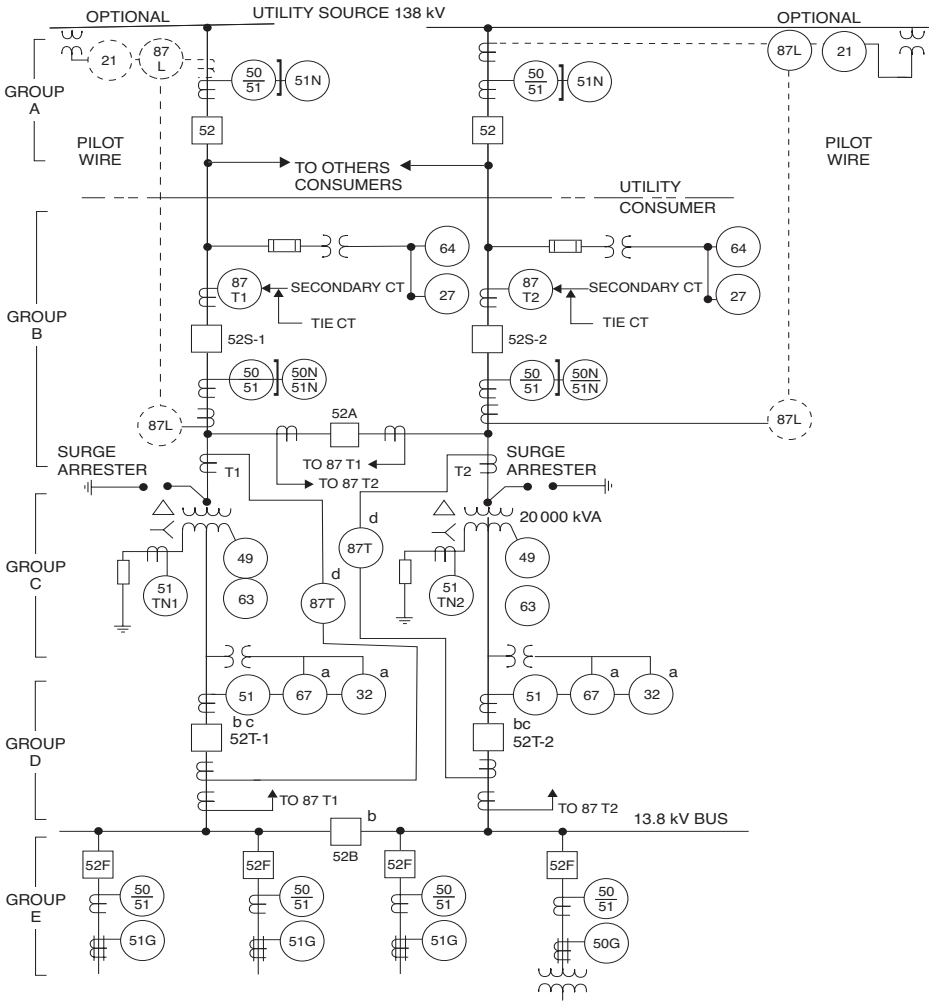

NOTES: a. Devices 67 and 32 are directional. Polarity of CTs and PTs must be verified.
b. Overcurrent and bus differential protection should be provided for the main and tie breakers, but protection is not shown here. See IEEE Std C37.95 and C37.97. If 52B is normally open, then device 67 may not be needed.
c. Circuit breaker or interrupter switch.
d. Protection 87TN should also be considered for low resistance grounded transformer applications.

Figure 14-9—Dual service with transformation

The preferred differential relay connections (Device 87Tl and Device 87T2) include the high-voltage breakers, bus work, and transformer bushings in their protective zones. The Device 87T CT connection is optional and would be used only where switching operations make it necessary to bypass a breaker. This setup is not the case as shown in Figure 14-9.

A fault in the transformer or on the secondary side of the transformer is seen by one or more of the following relays: transformer differential relays (Device 87T, Device 87Tl, and Device 87T2), overcurrent relays (Device 50/51, Device 50N, and Device 51N), and ground

Copyright © 2001 IEEE. All rights reserved.

Copyright The Institute of Electrical and Electronics Engineers, Inc.
Provided by IHS under license with IEEE
No reproduction or networking permitted without license from IHS
Not for Resale

relays (Device 51TN). The sudden pressure relay (Device 63) operates only for internal transformer faults. Directional overcurrent relays (Device 67) operate for phase faults on the respective supply line. Voltage relay (Device 64) operates for sustained ground faults on the supply line. When a ground fault is cleared by opening the utility end, the phase directional overcurrent relay (Device 67) may operate if it can be set low enough to operate on the minimum load of other consumers that may be connected to the same line. The directional power relay (Device 32) can operate on reversed power flow as low as the transformer excitation losses. It cannot be used if any condition of normal line loading results in reversed power flow in one transformer.

Line protective relays (Device 67, Device 64, and Device 32) are all time-delayed as required to coordinate with the clearing of faults beyond the utility source bus. Optional line pilot relaying (Device 87L) may be added for faster relaying of line faults.

As shown in Figure 14-9, a fault on one 13.8 kV bus relays both transformers simultaneously by Device 51 or Device 51TN relays. Therefore, dedicated bus relaying, differential relaying, or partial differential relaying is desirable to selectively relay a fault on one bus.

Because each installation has a wide variety of individual conditions, the relaying complement of Figure 14-9 is used only to illustrate certain protective schemes and is not intended to show all the devices that may be required. The transformer differential relay connections on all these low-side grounding schemes need particular attention for proper functioning on internal and external ground faults.

Operating the system of Figure 14-9 with the 13.8 kV bus tie breaker (Device 52B) open subjects each bus to the temporary interruptions of its supply line. It does avoid the need for all supply-line and dedicated bus relaying and reduces the fault duty to nearly one-half that of parallel operation. One option for operating with the tie breaker closed is to use a partial differential scheme on the main and tie breakers to selectively isolate faults. Increased transformer capacity could result in fault duty exceeding the capacity of existing switchgear and force nonparalleled operation.

In a similar installation, the utility may require the two lines to be bused at the high-voltage closed-bus tie breaker (Device 52A) in order to transmit power through the station. In this case, the utility would provide, own, and operate all the high-voltage line and bus switching equipment and protective relaying.

The characteristics of the utility system and requirements of consumer facilities determine what protective relaying scheme is required. Each installation would have to be examined individually, but the main criteria of the protective relaying scheme should be to isolate the faulted equipment as quickly as practicable.

14.5.6 Single-service supply with in-plant generation

The single-service supply in Figure 14-10 is the same as shown in Figure 14-7, except in-plant generation is added. Many industrial facilities are installing in-plant generation or cogeneration to provide power to their processes and in some cases to sell power to the utility

Copyright © 2001 IEEE. All rights reserved.

Copyright The Institute of Electrical and Electronics Engineers, Inc.
Provided by IHS under license with IEEE
No reproduction or networking permitted without license from IHS
Not for Resale

or adjacent customers where deregulation of the utility services is changing the way power is generated and distributed. The generator, when operated in parallel with the utility system, presents many additional protection and control problems. The system probably has to be designed to shed load if the utility source is lost. This design can be difficult because accurate control is needed by the generator governor to ensure that excessive loading does not occur during this load-shedding period. Another problem concerns disconnection of the generator from the utility system when the utility source becomes disconnected (i.e., islanded) under other than fault conditions. Under these circumstances, the industrial plant's generator may attempt to pick up loads of other consumers as well as plant load normally intended to be supplied by the utility system.

To attempt to solve these problems, a ground detection relay (Device 64) would recognize a ground fault on the 34.5 kV side of the transformer and would cause Device 52S to trip. As discussed in 14.4.2 c), this is true only if the ground fault is sustained after the utility breaker opens and removes the only source of ground-fault current. A directional power relay (Device 32) may be provided, which would measure the current flow toward the utility source, but would generally not be applied where power is delivered to the utility.

In some cases, calculations may show that the fault-sensing relay (Device 67) may provide this function. But actual setting of Device 67 should be determined before this conclusion is reached.

The utility may require the use of overfrequency and underfrequency relays and overvoltage and undervoltage relays. However, the most dependable means of ensuring tripping upon loss of the utility source is to provide direct transfer tripping from the utility supply circuit breaker to the proper plant equipment.

If load shedding is used, the underfrequency relay (Device 81) could be set to recognize a slowdown of the generator due to overload. This relay could trip the transformer's secondary circuit breaker and preselected feeder circuit breakers to shed load to within the rating of the generator. For customer reliability, Device 81, Device 27, and Device 59 should trip the incoming main. This gives the customer a generation source in case of utility problems, which could be the reason the mentioned relays would trip. The facility should have the capability to synchronize across the main incoming breaker to restore utility service without shutting down in-plant generation.

When the main step-down transformer is out of service, an alternate neutral ground should be established. In Figure 14-10, the generator neutral is resistance-grounded and provides a system ground if the main transformer is out of service. This consideration frequently results in a separate source of system neutral grounding, through either a zigzag ground transformer or the local generators. The in-plant generators can safely carry the system ground because the main transformer delta winding prevents any interaction between the utility system ground faults and the local generator neutral system. Various generator and system grounding configurations should be considered to reduce fault damage. For low-resistance-grounded generators, the generator may require a Device 87GN relay for complete ground-fault protection (see IEEE Std C37.101-1993, IEEE Std C37.102-1995, and IEEE Std C62.92.3-1993).

 Copyright © 2001 IEEE. All rights reserved.

Copyright The Institute of Electrical and Electronics Engineers, Inc.
Provided by IHS under license with IEEE
No reproduction or networking permitted without license from IHS Not for Resale

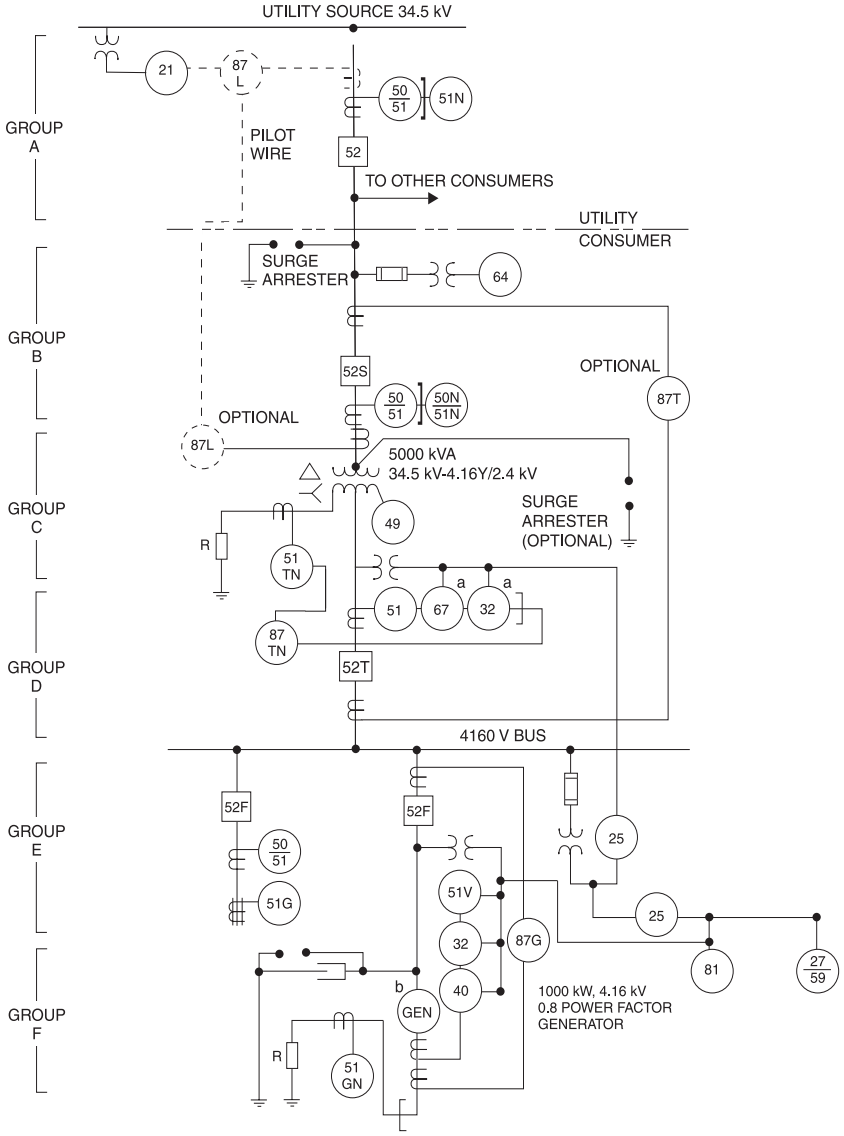

NOTES: a. Devises 67 and 32 are directional. Polarity of CTs and PTs must be verified.
b. See IEEE Std. C37.102 IEEE Guide for AC Generator Protection

Figure 14-10—Single service with in-plant generation

14.5.7 Breaker failure relaying

A form of backup protection that allows for more local detection and tripping for breaker failure is breaker failure relaying (also known as local breaker backup). Some form of breaker failure protection is generally used in the electric utility industry and is becoming more

Copyright © 2001 IEEE. All rights reserved.

Copyright The Institute of Electrical and Electronics Engineers, Inc.
Provided by IHS under license with IEEE
No reproduction or networking permitted without license from IHS
Not for Resale

common in the industrial customer setting, particularly for generation and cogeneration facilities.

Backup relay protection, including relaying intended to detect breaker failure remotely, has been a utility industry standard for many years. Typically, this type of relaying relied on impedance relays or overcurrent relays located at terminals remote from the faulted breaker. Many solid-state multifunction relays have breaker failure protection (e.g., Device 50BF) as an optional function of the relay.

Problems in using impedance or overcurrent types of remote backup protection include

— Time-delayed tripping may become slow as the remote relays coordinate with the downstream relays. At an industrial location, the remote relays for the feeder breaker may be the transformer backup protection. These relays would have to coordinate with the feeder protection and may be slow enough that the tripping times are intolerable.
— Multiple infeeds on complex lines may not allow impedance relays located at the main terminals to see faults on the customer side of the utility-customer interface (i.e., transformer low-voltage bus). At the customer location, the backup protection is typically a transformer overcurrent relay. The phase relay setting may be set high enough because of the load that it is debatable that the relay would even respond for certain downstream faults.
— A greater amount of the electric utility system must be interrupted to provide backup at a remote location.

The basic elements of local breaker failure relay schemes are

— An overcurrent fault detector used to monitor the current through a protected breaker and give positive indication of breaker operation. This fault detector can be augmented by breaker status contacts in some cases.
— Breaker failure initiating relays, which are energized by the protective relaying associated with each breaker.
— A timing relay to provide sufficient time to permit normal clearing of the fault before tripping the backup breakers.

In some cases, the fault detectors and the timing function are packaged together in one relay. In a typical scheme, when a fault occurs, the breaker failure initiating relays start the timer through the contacts of the fault detector. If the breaker opens successfully, the fault current drops to zero, the fault detector drops out, and the timer resets. However, if the breaker fails to open, the timer operates and trips the backup breakers.

Breaker failure protection includes the following characteristics:

a) Because the protection is local, only the breakers adjacent to the failed breaker need to be tripped. If the line or feeder is terminated at a ring bus, then transfer trip should be included to trip the remote station. Localized tripping reduces the amount of the system that is affected. Typically, industrial customers are fed by lines that are tapped

 Copyright © 2001 IEEE. All rights reserved.

Copyright The Institute of Electrical and Electronics Engineers, Inc.
Provided by IHS under license with IEEE
No reproduction or networking permitted without license from IHS Not for Resale

with other customer load and everyone benefits when only what is necessary is tripped.

b) Overcurrent relays should be installed to detect the presence of fault current. The breaker may have failed with the contacts open and the low-set breaker failure overcurrent relays could detect this condition. It is desirable to utilize a high dropout-to-pickup ratio to allow for quick reset if the fault is cleared successfully.

c) Breaker status contacts should be used to supplement the overcurrent fault detector where the protection scheme does not rely on fault current to operate (e.g., turbine trip). The problem with this type of scheme is that the breaker status contacts are mechanically limited and could fail.

d) Breaker failure relaying aids in maintaining generator stability. As more industrial customers install their own generators, this form of protection takes on greater significance.

e) The timer setting for the breaker failure relay should be set to allow the fault detector relays to reset after a successful trip.

f) If only one relay scheme is used in a zone of protection, remote backup relaying is still desirable. In this case, breaker failure relaying augments the backup protection, but does not replace it. Breaker failure protection should be initiated by the protective relays to function. A failure of these relays to operate during a fault defeats the breaker failure protection. Therefore, two independent protective relay schemes for each zone of protection should be used if remote backup protection is not used.

g) Breaker failure protection should be installed for vacuum and gas-insulated breakers. If vacuum breakers lose vacuum, the breaker will probably flashover due to the close separation distances of the contacts. Breaker failure protection should be initiated for this condition. If the gas-insulated breakers lose gas, the breaker also runs the risk of flashover. Often, the gas-insulated breaker incorporates a low-pressure cutout switch, which would disable tripping of the breaker. If this low-pressure cutout switch should operate, then breaker failure protection should be initiated directly.

Breaker failure relaying should be considered for every breaker regardless of the bus arrangement. Breaker failure protection is more commonly applied to the main utility and plant breakers, large generator breakers, and transmission voltage-level breakers. All adjacent breakers to the faulted breaker should be tripped, regardless of the fault location. This step is especially important for customer locations that have generation.

14.6 References

This recommended practice shall be used in conjunction with the following standards. When the following standards are superseded by an approved revision, the revision shall apply.

ANSI C84.1-1982, American National Standard for Electric Power Systems and Equipment—Voltage Ratings (60 Hz).[3]

[3]ANSI publications are available from the Sales Department, American National Standards Institute, 11 West 42nd Street, 13th Floor, New York, NY 10036, USA (http://www.ansi.org/).

Copyright © 2001 IEEE. All rights reserved.

--`,,`-`-`,,`,,`,`,,`---

Copyright The Institute of Electrical and Electronics Engineers, Inc.
Provided by IHS under license with IEEE
No reproduction or networking permitted without license from IHS
Not for Resale

IEEE Std 141-1993 (Reaff 1999), IEEE Recommended Practice for Electric Power Distribution for Industrial Plants (*IEEE Red Book*).[4]

IEEE Std 446-1995 (Reaff 2000), IEEE Recommended Practice for Emergency and Standby Power Systems for Industrial and Commercial Applications (*IEEE Orange Book*).

IEEE Std 493-1997, IEEE Recommended Practice for the Design of Reliable Industrial and Commercial Power Systems (*IEEE Gold Book*).

IEEE Std 519-1992, IEEE Recommended Practices and Requirements for Harmonic Control in Electric Power Systems.

IEEE Std 1100-1999, IEEE Recommended Practice for Powering and Grounding Sensitive Electronic Equipment (*IEEE Emerald Book*).

IEEE Std C37.95-1989 (Reaff 1994), IEEE Guide for Protective Relaying of Utility-Consumer Interconnections.

IEEE Std C37.97-1979 (Reaff 1990), IEEE Guide for Protective Relay Applications to Power System Buses.

IEEE Std C37.101-1993, IEEE Guide for Generator Neutral Ground Protection.

IEEE Std C37.102-1995, IEEE Guide for AC Generator Protection.

IEEE Std C37.108-1989 (Reaff 1994), IEEE Guide for the Protection of Network Transformers.

IEEE Std C57.12.44-2000, IEEE Standard Requirements for Secondary Network Protectors.

IEEE Std C57.91-1995, IEEE Guide for Loading Mineral-Oil-Immersed Power Transformers.

IEEE Std C57.110-1998, IEEE Recommended Practice for Establishing Transformer Capability When Supplying Nonsinusoidal Load Currents.

IEEE Std C62.22-1997, IEEE Guide for the Application of Metal-Oxide Surge Arresters for Alternating-Current Systems.

IEEE Std C62.92.3-1993, IEEE Guide for the Application of Neutral Grounding in Electrical Utility Systems, Part III—Generator Auxiliary Systems.

NEMA MG l-1998, Motors and Generators.[5]

---

[4]IEEE publications are available from the Institute of Electrical and Electronics Engineers, 445 Hoes Lane, P.O. Box 1331, Piscataway, NJ 08855-1331, USA (http://standards.ieee.org/).

[5]NEMA publications are available from Global Engineering Documents, 15 Inverness Way East, Englewood, CO 80112, USA (http://global.ihs.com/).

Copyright © 2001 IEEE. All rights reserved.

Copyright The Institute of Electrical and Electronics Engineers, Inc.
Provided by IHS under license with IEEE
No reproduction or networking permitted without license from IHS Not for Resale

NFPA 70-1999, National Electric Code® (NEC®).[6]

UL 1561, Dry Type General Purpose and Power Transformers.[7]

UL 1562, Transformers- Distribution, Dry Type Over 600V.

14.7 Bibliography

[B1] *Applied Protective Relaying*. Newark, N.J.: Westinghouse Electric Corporation, 1976.

[B2] Blackburn, J. L., *Protective Relaying, Principles and Applications*, 2nd ed. New York: Marcel Decker, Inc., 1998.

[B3] Dunsmore, D. M., et al, IEEE PES T&D Conference, Dallas, TX, Magnification of Transient Voltages in Multi-Voltage-Level, Shunt-Capacitor-Compensated Circuits, Sept. 22–27, 1991.

[B4] Gabba, A. P., and Hill, J. D., "Make Automatic Power Source Transfers a Success For Your Plant," PCIC Conference Record, pp. 29–40, 1998.

[B5] IEEE Special Publication 88TH0224-6-PWR, Intertie Protection of Consumer-Owned Sources of Generation, 3 MVA or Less.

[B6] Linders, J. R., "Effects of Power Supply Variations on AC Motor Characteristics," *IEEE Transactions on Industry Applications*, vol. IA-8, pp. 383–400, July/Aug. 1972.

[B7] Linders, J. R., "Electric Wave Distortions: Their Hidden Costs and Containment," *IEEE Transactions on Industry Applications*, vol. IA-15, Sept./Oct. 1979.

[B8] Mathltr, B. K., "A Closer Look at the Application and Setting of Instantaneous Devices," Conference Record, IEEE I&CPS Technical Conference, Paper 79CH1460-51A, pp. 107–118, 1979.

[B9] McFadden, R. H., and Working Group on Fast Transfer of Motors of the IEEE/IAS/PSPC, "Source Transfer and Reclosing Transients in Motors: A Preliminary Working Group Report," Conference Record, IEEE I&CPS Conference, Philadelphia, Paper 82CH1740-0, pp. 43–50, 1982.

[B10] Smith, D. H., "Problems Involving Industrial Plant-Utility Power System Interties," *IEEE Transaction on Industry Applications*, vol. IA- 11, Nov./Dec. 1975.

[6]The NEC is published by the National Fire Protection Association, Batterymarch Park, Quincy, MA 02269, USA (http://www.nfpa.org/). Copies are also available from the Institute of Electrical and Electronics Engineers, 445 Hoes Lane, P.O. Box 1331, Piscataway, NJ 08855-1331, USA (http://standards.ieee.org/).

[7]UL standards are available from Global Engineering Documents, 15 Inverness Way East, Englewood, CO 80112, USA (http://global.ihs.com/).

Copyright © 2001 IEEE. All rights reserved.

Copyright The Institute of Electrical and Electronics Engineers, Inc.
Provided by IHS under license with IEEE
No reproduction or networking permitted without license from IHS
Not for Resale

[B11] Smith, R. L., Jr., "Selecting a Reliable Power System Configuration," *Plant Engineering*, pp. 78–81, Jan. 7, 1982.

[B12] Walsh, G. F., "The Effects of Reclosing on Industrial Plants," *Proceedings of the American Power Conference*, vol. 23, pp. 768–778, 1961.

Copyright © 2001 IEEE. All rights reserved.

Copyright The Institute of Electrical and Electronics Engineers, Inc.
Provided by IHS under license with IEEE
No reproduction or networking permitted without license from IHS
Not for Resale

Chapter 15
Overcurrent coordination

15.1 General discussion

The objectives of overcurrent coordination are to determine the characteristics, ratings, and settings of overcurrent protective devices that minimize equipment damage and interrupt short circuits as rapidly as possible. These devices are generally applied so that upon a fault or overload condition, only a minimum portion of the power system is interrupted. An overcurrent coordination study is the comparison and selection of operating times of the protective devices that achieve the objectives of the protection system under abnormal system conditions. This study should include all devices from the utilization equipment to the source.

A coordination study also provides data useful for the selection of

— Instrument transformer ratios
— Protective relay characteristics and settings
— Fuse characteristics and ratings
— Low-voltage circuit breaker ratings, characteristics, and settings

It also provides other information pertinent to the provision of optimum protection and selectivity in the coordination of these devices.

In new installations, electrical equipment ratings often change prior to plant startup, but after protective devices have been ordered. These changes should be anticipated when selecting protective devices so that the device characteristics are sufficiently flexible to protect the individual load or branch circuit. A preliminary coordination study should be made during the early stages of a new system design to verify that the protective device ratings can be selective and that the source utility's protection practices have been considered. The protective device settings should be determined after the design has been completed and all load and fault currents have been calculated.

Protective devices are applied to a power system as primary and backup protection. Primary protection is the first line of defense against further damage caused by a fault or other abnormal operating condition. These devices are generally set to operate faster and remove less of the power system from service than backup protection.

Backup protection takes over when the primary protection fails to clear the abnormal condition. Backup protective devices and settings are selected to operate at some predetermined time interval after the primary device operates. Thus, a backup device should be able to withstand the fault conditions for a greater time period than the primary protective device. For most applications, the operation of the backup device isolates circuits in addition to the faulted or overloaded circuit. Therefore, a greater portion of the power system is interrupted with backup protection.

Copyright © 2001 IEEE. All rights reserved.

--`,,-`-`,,`,,`,`,,`---

Copyright The Institute of Electrical and Electronics Engineers, Inc.
Provided by IHS under license with IEEE
No reproduction or networking permitted without license from IHS
Not for Resale

In applying protective devices, it is occasionally necessary to compromise between protection and selectivity. While experience may suggest one alternative over another, the preferred approach is to favor protection over selectivity. Which choice is made, however, is dependent on the equipment damage and the affect on the process.

In existing facilities, system configurations and operating conditions often change. A new coordination study should be performed when the available short-circuit current to a plant changes or when significant changes in plant loading occur. This study determines the ratings or settings necessary to ensure that selectivity and protection are maintained after system changes occur.

A coordination study should definitely be performed when a fault on the periphery of an existing plant unexpectedly shuts down a major portion of the system. Such an event may indicate a need to change or reset devices.

15.2 General considerations

15.2.1 Short-circuit currents

When performing a coordination study, some or all of the following information on short-circuit currents for each local bus may be necessary:

a) Maximum and minimum momentary (first cycle) single- and three-phase short-circuit current
b) Maximum and minimum interrupting duty (1.5 cycles to 8 cycles) three-phase short-circuit current
c) Maximum and minimum 30-cycle three-phase short-circuit current
d) Maximum and minimum ground-fault current

These values are obtained as described in Chapter 2.

The momentary currents are used to determine the maximum and minimum currents to which instantaneous and direct-acting trip devices respond.

The maximum interrupting current is the value at which the circuit protection device coordination time interval (CTI) is most often established. This practice results in conservative CTIs for all values of short-circuit current. The minimum interrupting current is needed to determine whether the circuit protection sensitivity is adequate.

The 30-cycle fault currents (no motor contribution) may be used to set the CTI for time-overcurrent protective devices in the system. By the time these protective devices operate, the motor contribution to the fault current will have decayed to zero or to minimal levels. Many short-circuit calculation programs also have the capability of calculating the current flow to and from a bus. The actual fault current flowing through the protective device should be used for coordination. In addition, it may be necessary to obtain the *X*/*R* ratios applicable to single- and three-phase short-circuit currents.

 Copyright © 2001 IEEE. All rights reserved.

Copyright The Institute of Electrical and Electronics Engineers, Inc.
Provided by IHS under license with IEEE
No reproduction or networking permitted without license from IHS Not for Resale

15.2.2 Delta-wye transformers

When faults occur on the secondary of delta-wye grounded transformers, the per-unit fault-current magnitude in each phase depends on the type of fault. The fault-current magnitude directly affects the coordination of the transformer primary protective device with the transformer through-fault protection curve and the secondary protection device. A review of these faults is shown in Figure 15-1.

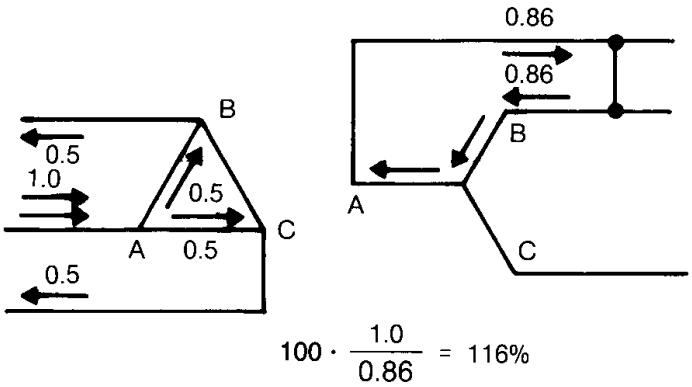

Figure 15-1—Currents in delta-wye grounded transformer for secondary phase-to-phase faults

For a phase-to-phase fault on the secondary of a delta-wye transformer, the per-unit primary line current in one phase is approximately 16% greater than the per-unit secondary line current. Also, the primary winding current for a three-phase secondary fault is approximately 16% greater than for a phase-to-phase secondary fault.

Similarly, for a single phase-to-ground fault on a solidly grounded transformer secondary, the per-unit currents in two phases of the primary are only 58% ($1/\sqrt{3}$) of the secondary fault current. And for a three-phase fault on the transformer secondary, the primary winding current equals that for a single-phase-to-ground fault. For this condition, the primary protective device characteristic curve should be shifted to the right or the transformer damage curve should be shifted to the left by 58%.

These adjustments provide verification that the primary protective device can adequately protect the transformer for the various types of secondary faults and ensure proper coordination with downstream devices.

15.2.3 Load flow currents

In addition to short-circuit and voltage drop studies, a load flow study should be made to determine the normal and emergency load currents at each load center and through each branch circuit. The load current data are used to establish conductor, equipment, and protective device continuous-current ratings. Such data are valuable when setting protective devices to protect both the equipment and the installed conductor.

Copyright © 2001 IEEE. All rights reserved.

Copyright The Institute of Electrical and Electronics Engineers, Inc.
Provided by IHS under license with IEEE
No reproduction or networking permitted without license from IHS
Not for Resale

15.2.4 Pickup

The term *pickup* has acquired several meanings. For many devices, pickup is defined as the minimum current that starts an action. This definition is accurately used when describing a relay characteristic. Pickup also describes the performance of a low-voltage circuit breaker with an electronic trip device. However, the term does not apply accurately to the thermal trip element of a thermal-magnetic molded-case circuit breaker (MCCB), which deflects as a function of stored heat.

The pickup of an overcurrent protective relay has generally been considered the minimum value of current that causes the relay to close its contacts. The current (or tap) setting of the relay and the minimum pickup were synonymous. However, with new technology developments in static overcurrent relays, this definition needs more clarification.

15.2.4.1 Electromechanical versus static relays

The pickup value for electromechanical induction disk time-overcurrent relays is the minimum current that causes the disk to start turning and ultimately close its contacts. This value is not necessarily the tap setting on the relay. The time it takes the contacts to close is a function of the dynamics of the relay's magnetic circuits and the manufacturer's tolerances. At the pickup value, the time to contact closure is long, and the accuracy is less than desired. Any deviation in the applied current results in significant time changes. As a result, manufacturers generally do not plot their time curves below 1.5 to 2 times minimum pickup (see Blackburn[1]).

The tap or current setting of static relays usually correspond to the pickup current. Also, the trip time is much more accurate, especially in the range of 1.0 to 2.0 times minimum pickup. However, manufacturers still do not plot their time curves in this range to correspond with the electromechanical devices.

Electromechanical relays with solenoid-actuated devices typically have high-speed operation. As such, the tap or current settings of these relays usually correspond to pickup current.

15.2.4.2 Low-voltage circuit breakers

For low-voltage power circuit breakers (LVPCBs), pickup is defined as the calibrated value of minimum current, subject to certain tolerances, which ultimately cause a trip device to trip the circuit breaker. Trip devices can be either electronic or electromechanical, each with various timing options. A trip device may be equipped with a long-time delay, short-time delay, and/or instantaneous characteristic. Each timing characteristic may have a separately adjustable pickup value, which may be set as a multiple or percentage of trip-device rating, current-sensor rating, or the long-time delay pickup. The timing characteristic may also have separately adjustable time delay ranges.

[1]Information on reference can be found in 15.10.

Copyright © 2001 IEEE. All rights reserved.

Copyright The Institute of Electrical and Electronics Engineers, Inc.
Provided by IHS under license with IEEE
No reproduction or networking permitted without license from IHS Not for Resale

15.2.4.3 MCCBs

MCCBs with thermal trip elements generally carry 100% of their current rating at 25 °C in open air. Therefore, these breakers carry a continuous-ampere rating rather than a pickup value. MCCBs should only be applied at 80% of their continuous-current rating (unless specifically labeled) and applied within the panelboard construction according to the Underwriters Laboratories' (UL) specification, to maintain adequate ventilation and temperature around the MCCB.

15.2.4.4 Fuses

Continuous-ampere ratings are also used instead of pickup ratings for fuses. Low-voltage power fuses are designed to withstand 110% of their continuous rating indefinitely under controlled laboratory conditions. Both single- and dual-element fuses are available up through 600 V, with the dual-element fuse utilizing one element for overload and the second element for short-circuit protection. Medium- and high-voltage power fuses typically do not operate for currents below 200% of their nominal ampere ratings.

15.2.5 Primary device pickup coordination

To be effective, the design ratio of the backup device minimum pickup (or continuous) rating to the primary device pickup (or continuous) rating should be as small as possible.

For example, a 600 A trip setting on a low-voltage circuit breaker can hardly be expected to back up a motor control center (MCC) 20 A branch circuit protected by an MCCB; its ratio is 30 (i.e., 600/20 = 30).

Another example is determining the setting of a 600 A trip device that protects an MCC, where one or more large loads may predominate. Assume that the MCC has only four motors, each 75 kW with a full-load motor current of 120 A each and a locked-rotor current of 720 A. If three motors are running and the fourth motor starts, a total current of 1080 A passes through the low-voltage circuit breaker trip coil. [Total $I = (3 \times 120) + (1 \times 720) = 1080$ A, assuming a constant motor starting power factor.] Depending upon the motor acceleration time, this total current could affect the settings of either or both trip elements (e.g., long-time, short-time) of the low-voltage circuit breaker. This 1080 A current should be permitted to exist during motor acceleration without tripping the low-voltage circuit breaker. Allowance should also be made for longer acceleration time that may occur during allowable low-voltage conditions. (A starting motor power factor may be close to 20%, and a running motor power factor may range from 71% to over 90% for integral horsepower three-phase motors so the total current would be less than 1080 A.)

A 600 A trip setting on the supply breaker serving the MCC would coordinate well with each of the above loads, which would normally be protected with a long-time pickup of approximately 140 A to 150 A (i.e., ratio 600/150 = 4).

Copyright © 2001 IEEE. All rights reserved.

--`,,`-`-`,,`,,`,`,,`---
Copyright The Institute of Electrical and Electronics Engineers, Inc.
Provided by IHS under license with IEEE
No reproduction or networking permitted without license from IHS
Not for Resale

15.2.6 Current transformer (CT) saturation

The function of a CT is to produce a secondary current that is proportional in magnitude and in phase with the primary current. This secondary current is applied to protective relays of compatible range and load (or burden) characteristics.

When CTs are operated at or near the knee of their excitation curve, small increases in current magnitude can cause the flux density to increase substantially and cause saturation. When saturation occurs, the secondary current wave shape becomes distorted, and the signal to the protective relays is no longer proportional to the current input. In some cases of severe saturation, the output current of the secondary could be near zero on one or more phases. Depending on the level of distortion of the secondary waveform and the design of the relay, the operation can be affected.

For electromechanical induction disk relays, the effect of CT saturation is to slow the rotational speed of the disk. When the CT becomes saturated, the actual secondary relay current is less than it should be, its wave shape is distorted, and the relay operates more slowly. This condition leads to longer trip times and possible miscoordination.

Saturation can occur in CTs used to measure low-voltage ground-fault current, especially in underdesigned core-balance CTs in backup ground-fault relay applications. Saturation has also occurred in the solid-state low-voltage trip devices that use current sensors (which should not be confused with CTs, except for the fact that they reduce phase currents to a value compatible with their devices electronic circuitry). These current sensors form a residual circuit for the measurement of ground-fault current. Normal equipment-starting current or downstream phase faults may produce an unbalanced current that can cause a false ground-fault current trip.

In most industrial systems, CT saturation is significant only in circuits with relatively low-ratio CTs and high magnitude fault currents. In most cases, these circuits feed utilization equipment; therefore, relays with instantaneous settings below the CT saturation point can be applied. As one progresses back toward the source, the CT ratios get larger at the same voltage level. Also, the CTs have more turns; develop higher voltages; and, therefore, are less likely to saturate when standard burdens are applied. Saturation of CTs due to the dc component of an asymmetrical fault current can cause a delay in the operation of some instantaneous relays. It can also cause false tripping of residually connected instantaneous ground-fault relays.

See the example in Chapter 3 for possible problems and solutions to CT saturation.

15.3 Overcurrent protection guidelines

15.3.1 General

Before proceeding with overcurrent coordination, the individual load or branch circuit protection should be applied in accordance with accepted guidelines recommended or mandated

Copyright © 2001 IEEE. All rights reserved.

--`,,`-`-`,,`,,`,`,,`---

Copyright The Institute of Electrical and Electronics Engineers, Inc.
Provided by IHS under license with IEEE
No reproduction or networking permitted without license from IHS Not for Resale

by the National Electrical Code® (NEC®) (NFPA 70-1999), American National Standards Institute (ANSI), Canadian Standards Association (CSA), Canadian Electrical Code (CEC), International Electrotechnical Commission (IEC), and the Institute of Electronic and Electrical Engineers (IEEE), or a similar code or body, where applicable. The NEC is primarily a safety code; but does offer specific protection requirements for electrical equipment. Enforcement of this code is the prerogative of the authority having jurisdiction.

15.3.2 Conductors

Continued overcurrents increase the resistance heating (I^2R) of conductors and can decrease cable insulation life and cause failures. Conductors are normally protected by overcurrent protective devices, with the pickup settings based on the cable ampacity. The NEC provides rules for the protection of conductors. These rules are generally based on the long-time pickup rating of the protective device and the normal full-load rating (or ampacity) of the conductor.

The conductor short-time heating limits, based on short-circuit currents or on allowable emergency overload currents, are additional points that should be plotted to ensure that the protective devices provide adequate protection for the conductor.

In coordinating system protection, the conductor should be able to withstand the maximum through-fault current for a time equivalent to the tripping time of the upstream protective device. Figure 15-2 illustrates the basic criteria for conductor protection using an MCCB. See Chapter 9 for more detail on how to determine the emergency overload and short-circuit withstand capability of the conductor to be protected.

Another factor in protecting the circuit cable is the maximum short-circuit current available at the extremity of the cable circuit. The conductor insulation should not be damaged by the high conductor temperature resulting from current flowing to a fault beyond the cable termination. As a guide in preventing insulation damage, curves of conductor size and short-circuit current based on temperatures that damage insulation are available from cable manufacturers. Typical curves are shown in Chapter 9 and also in IEEE Std 141-1993. In coordinating system protection, the cable should be able to withstand the maximum through-short-circuit current for a time equivalent to the tripping time of the primary relay protection or total clearing time of the fuse. Many times this requirement determines the minimum conductor size applicable to a particular power system. If it is not possible to select a device that will protect the cable insulation, it is recommended that a conductor large enough to carry the current without insulation damage be used. See Chapter 9 on conductors.

15.3.3 Motors

The overcurrent protection of motors includes both overload and short-circuit protection, as required by the NEC. However, additional factors should be considered when applying overcurrent protective devices to motors. These factors include locked-rotor current, acceleration time, and safe stall time. Complications arise from the fact that the same devices that protect the motor from thermal damage must also allow the motor to start.

Copyright © 2001 IEEE. All rights reserved.

Copyright The Institute of Electrical and Electronics Engineers, Inc.
Provided by IHS under license with IEEE
No reproduction or networking permitted without license from IHS
Not for Resale

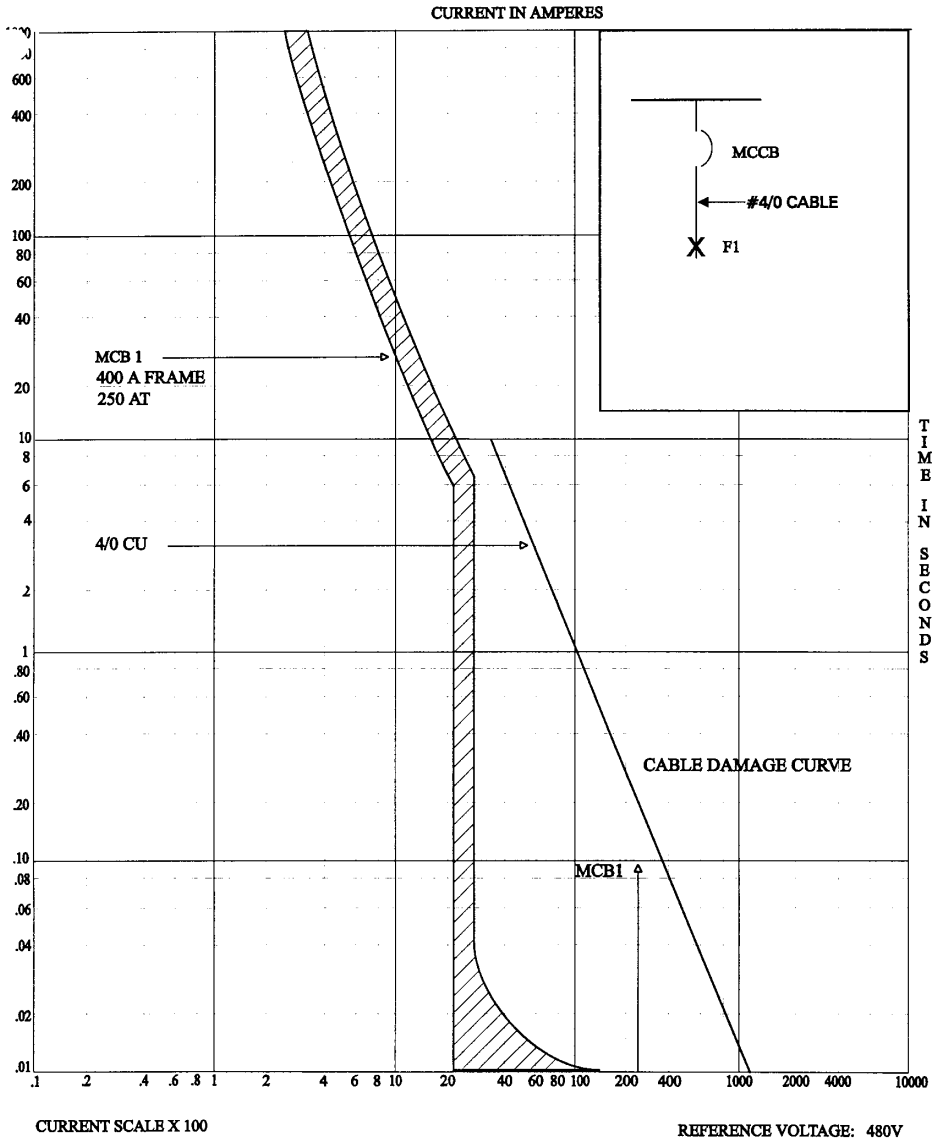

Figure 15-2—Basic criteria for conductor protection using an MCCB

Motor protection points that are generally plotted on the overcurrent coordination curve include root-mean-square (rms) asymmetrical starting current, locked-rotor current, acceleration time, allowable stall time, and full-load current. The motor starting curve normally shows the symmetrical starting current, but the initial starting current is asymmetrical with the maximum occurring at a 0.5 cycle (see Bradfield and Heath [B3]; Burke and Finley [B4]; Nailen [B12])[2]. Peak-current-sensing protective devices are sensitive

[2]The numbers in brackets preceded by the letter B correspond to those of the bibliography 15.11.

Copyright © 2001 IEEE. All rights reserved.

Copyright The Institute of Electrical and Electronics Engineers, Inc.
Provided by IHS under license with IEEE
No reproduction or networking permitted without license from IHS
Not for Resale

to this current. Therefore, engineering judgment should be used when choosing the protective device type and settings to account for the asymmetrical current during startup to prevent false tripping of the short-circuit protective device.

A typical rms asymmetrical starting inrush current would be about 1.76 times the symmetrical locked-rotor current. This inrush factor is influenced by the point on the voltage waveform on each phase when the contactor closes, the *X/R* ratio of the power system, and the *X/R* ratio of the motor. This inrush factor could be as high as 2 to 3 times for stiff power systems for large high-efficiency motors (see Bradfield and Heath [B3]; Burke and Finley [B4]; Nailen [B12]; Padden and Pillai [B13]). The locked-rotor current should be obtained from manufacturer's data, the locked-rotor NEMA code letter on the nameplate, or Table 151A and Table 151B of NEC Article 430. The acceleration time of the motor, based on the normal means used to start the motor and driven load, should be plotted. The motor acceleration time can be obtained from the motor manufacturer. The motor permissive stall time, which may be given as both hot and cold stall times, should be plotted as well. The overcurrent protection should give enough time delay to allow the motor to start, but not so much that the operating time at locked-rotor current is above the permissive stall times. If the acceleration time is above the stall time, special relaying considerations may be required. The motor full-load current should be plotted, and a benchmark should also be plotted for the maximum permitted overcurrent device setting for overload protection based on the NEC.

Motor overload and short-circuit protection are often provided by a combination of devices. On low-voltage systems, this combination is usually an overload relay with a current-limiting fuse or an overload relay with a low-voltage circuit breaker. The overload relay should be selected (or set) based on the full-load current and service factor of the motor. The fuse or circuit breaker should be selected or set to protect the motor circuit during short circuits, but should not interrupt normal starting currents. As a result, the time-current characteristic (TCC) of the combination device must fall below and to the left of the motor thermal limit curve and fall above and to the right of the motor starting curve. Figure 15-3a, Figure 15-3b, and Figure 15-3c illustrate these criteria using a fuse, a magnetic-only MCCB combination starter, and a thermal-magnetic MCCB combination starter, respectively. Refer to Chapter 7 and Chapter 11 for more details regarding motor overcurrent protection and protective device selection.

NOTE—Where two time-current curves intersect, as in the case of the overload and fuse curves in Figure 15-3a, the normal convention is to eliminate the portion of the curves above and to the right of the point of intersection, as indicated by the dotted-line intersection (see Cardinal [B5]). However, for completeness, the entire curve is shown throughout this chapter.

15.3.4 Transformers

Transformers are subject not only to insulation damage from prolonged overloads and short circuits, but also to mechanical damage from the tremendous stresses experienced during a fault. Because of their importance in the plant electrical distribution system, the transformer should be not only well-protected, but also secure from inadvertent trips due to faults elsewhere in the system. The NEC requires that transformers be protected from overcurrent with

Copyright © 2001 IEEE. All rights reserved.

Copyright The Institute of Electrical and Electronics Engineers, Inc.
Provided by IHS under license with IEEE
No reproduction or networking permitted without license from IHS
Not for Resale

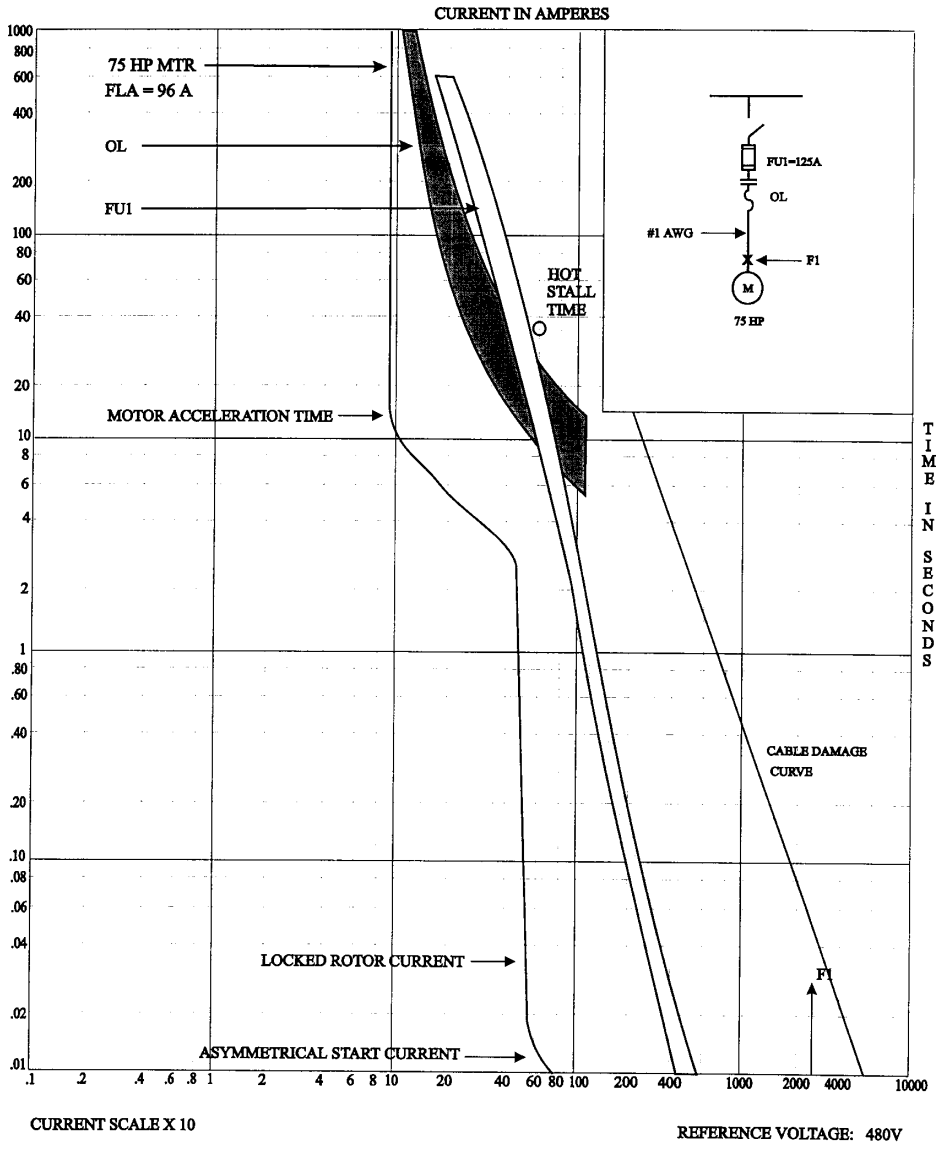

Figure 15-3a—Motor overload coordination plot using combination overload relay and fuse

Copyright © 2001 IEEE. All rights reserved.

Copyright The Institute of Electrical and Electronics Engineers, Inc.
Provided by IHS under license with IEEE
No reproduction or networking permitted without license from IHS
Not for Resale

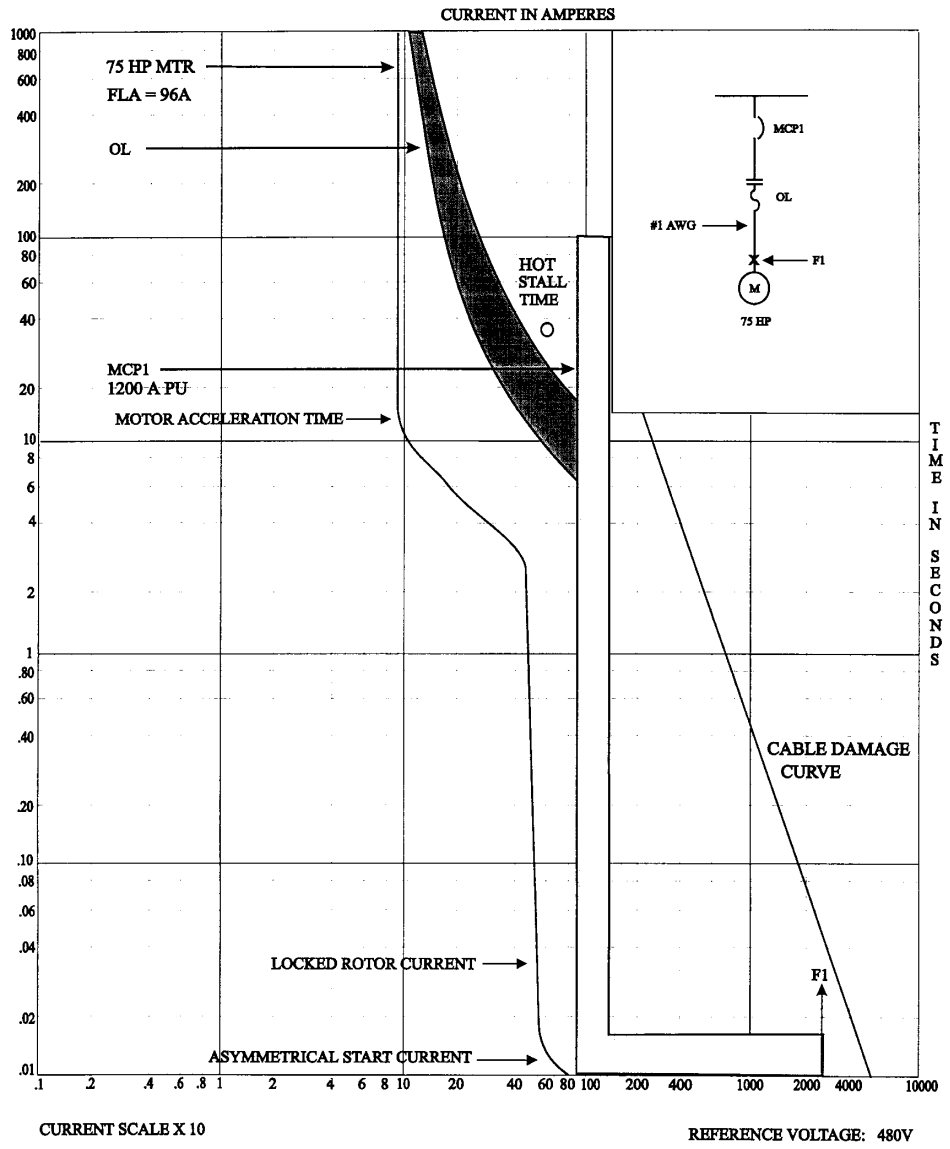

Figure 15-3b—Motor overload coordination plot using combination overload relay and magnetic-only MCCB

Copyright © 2001 IEEE. All rights reserved.

Copyright The Institute of Electrical and Electronics Engineers, Inc.
Provided by IHS under license with IEEE
No reproduction or networking permitted without license from IHS
Not for Resale

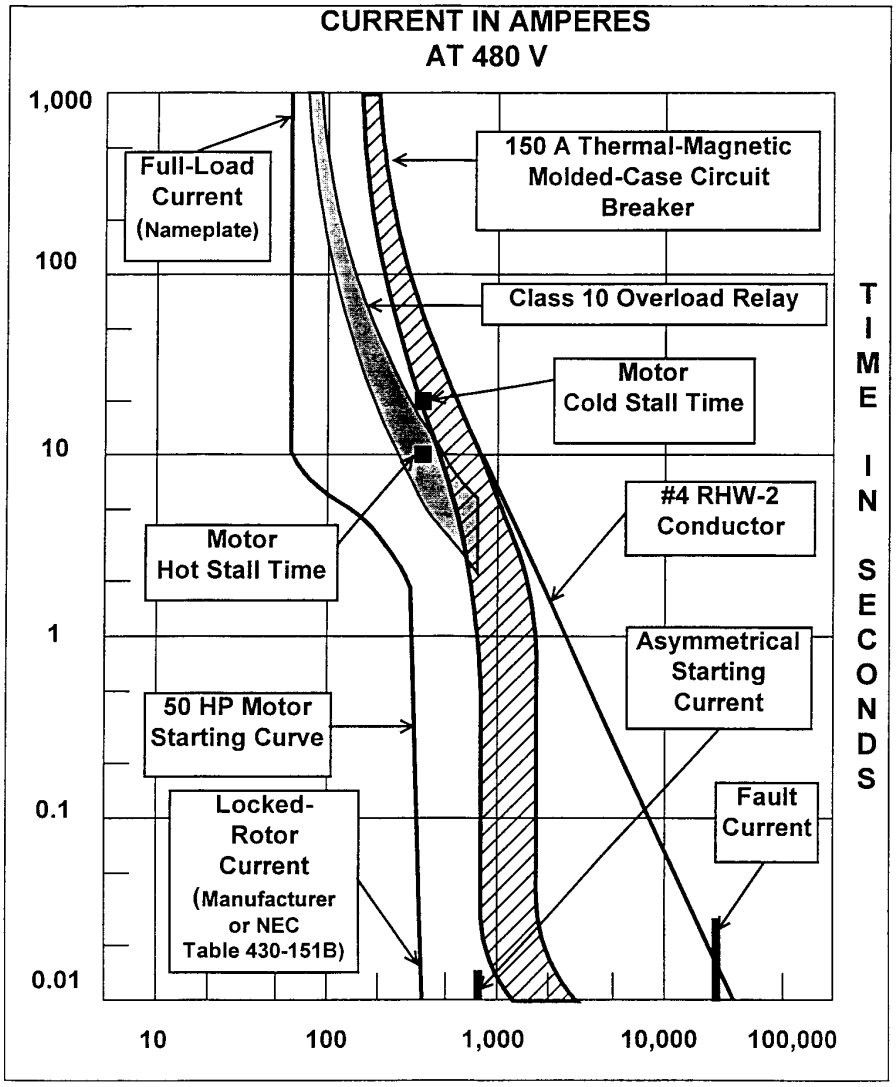

Figure 15-3c—Motor overload coordination plot using combination overload relay and thermal-magnetic MCCB

Copyright © 2001 IEEE. All rights reserved.

Copyright The Institute of Electrical and Electronics Engineers, Inc.
Provided by IHS under license with IEEE
No reproduction or networking permitted without license from IHS
Not for Resale

the use of protective devices on the primary or secondary, or both. The important factors to be considered when coordinating transformer protective relays are

— Transformer voltage, kilovoltamperes, and impedance ratings
— Primary and secondary winding connections
— Connected load
— Transformer magnetizing inrush current
— Transformer thermal and mechanical protection curves
— Short-circuit current available on both the primary and secondary

IEEE Std C57.109-1993 recommends protection based on the size of the transformer and the number of estimated through-faults that the transformer is expected to encounter. The through-fault protection curves contained in IEEE Std C57.109-1993 should be used as the basis for setting transformer overcurrent protective relays.

In addition, the maximum inrush current, usually assumed to be at 0.1 s and ranging from 8 to 12 times the transformer self-cooled rated current, should be plotted to ensure the protective relays do not trip on transformer energization.

A final protection point is the maximum permitted overcurrent setting for overload and short-circuit protection based on NEC rules. The NEC overcurrent protection rules are based on whether the transformers

— Are above or below 600 V and
— Have not more than 6% impedance (or, if more than 6%, then not more than 10% impedance)

The overcurrent device on the transformer primary should provide protection against thermal and mechanical damage, yet allow the normal connected load to flow. (Refer to Chapter 11 for the details concerning overload protection, thermal, and mechanical damage curves.)

Figure 15-4a and Figure 15-4b illustrate the factors described in this subclause using a variety of protective devices.

15.3.5 Generators

Generators are complex and require a variety of protective devices. Overcurrent devices usually provide backup protection to other generator relays, such as differential.

Because the short-circuit current available from a generator decreases over time, the use of standard overcurrent relays is not practical. The relay pickup setting should be low enough to trip in response to the minimum sustainable generator contribution (i.e., synchronous current E/X_d), but should not trip unnecessarily due to normal overloads. To accommodate these requirements, a voltage-restrained or voltage-controlled overcurrent relay (Device 51V) is used. This device allows the relay to differentiate between system faults and generator faults. When a fault occurs near the generator, the depressed voltage allows the voltage-restrained relay to become more sensitive (i.e., the characteristic curve shifts to the left) as shown in

Copyright © 2001 IEEE. All rights reserved.

--`,,`-`-`,,`,,`,`,,`---

Copyright The Institute of Electrical and Electronics Engineers, Inc.
Provided by IHS under license with IEEE
No reproduction or networking permitted without license from IHS
Not for Resale

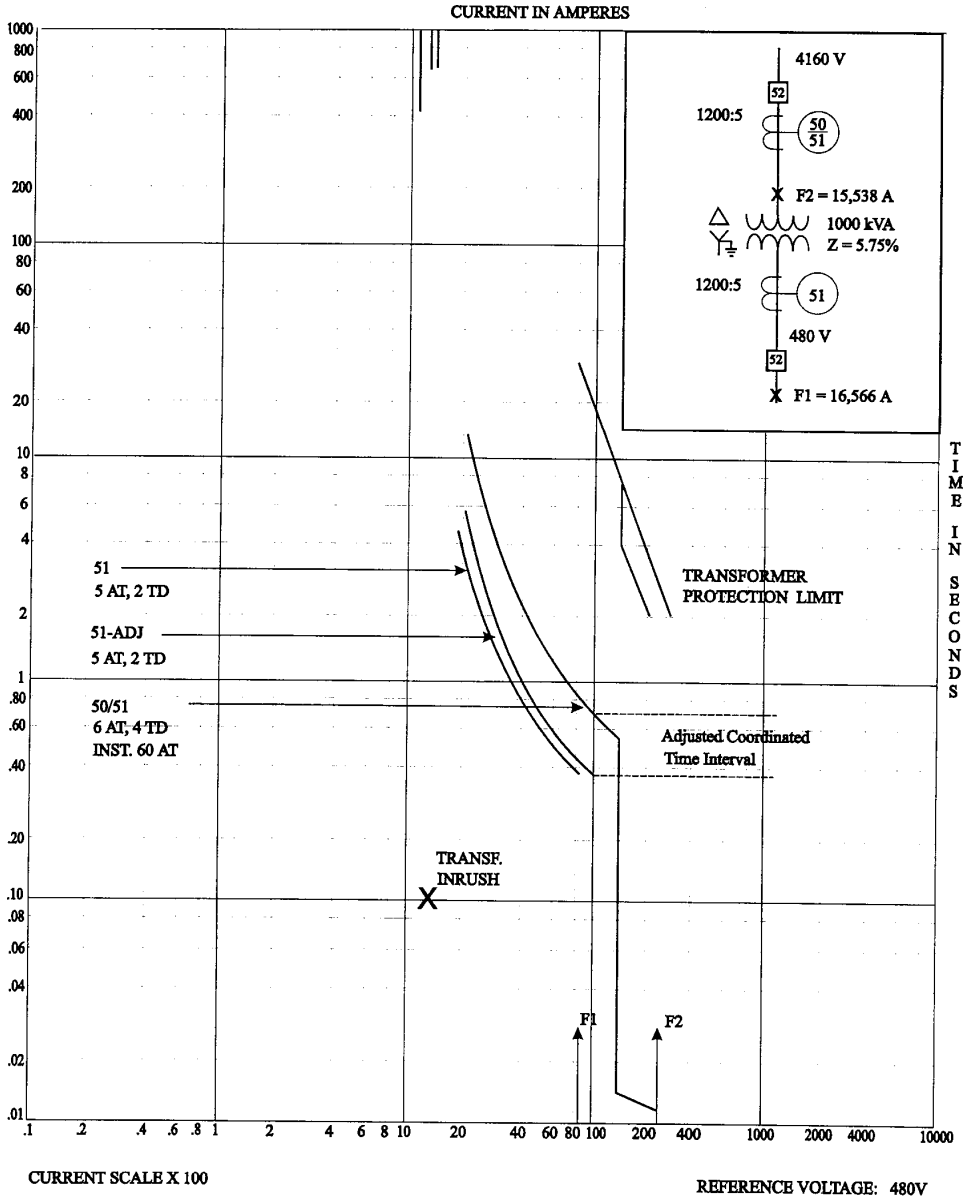

Figure 15-4a—Coordination plot for transformer primary protection using protective relay

Figure 12-33. The voltage-controlled relay operates as a simple switched overcurrent relay. Both of these relays require coordination with local and upstream protective devices. The voltage-restrained overcurrent relay should be selective over its entire range of operation. Refer to Chapter 12 for details regarding the operation of these relays.

Copyright © 2001 IEEE. All rights reserved.

Copyright The Institute of Electrical and Electronics Engineers, Inc.
Provided by IHS under license with IEEE
No reproduction or networking permitted without license from IHS
Not for Resale

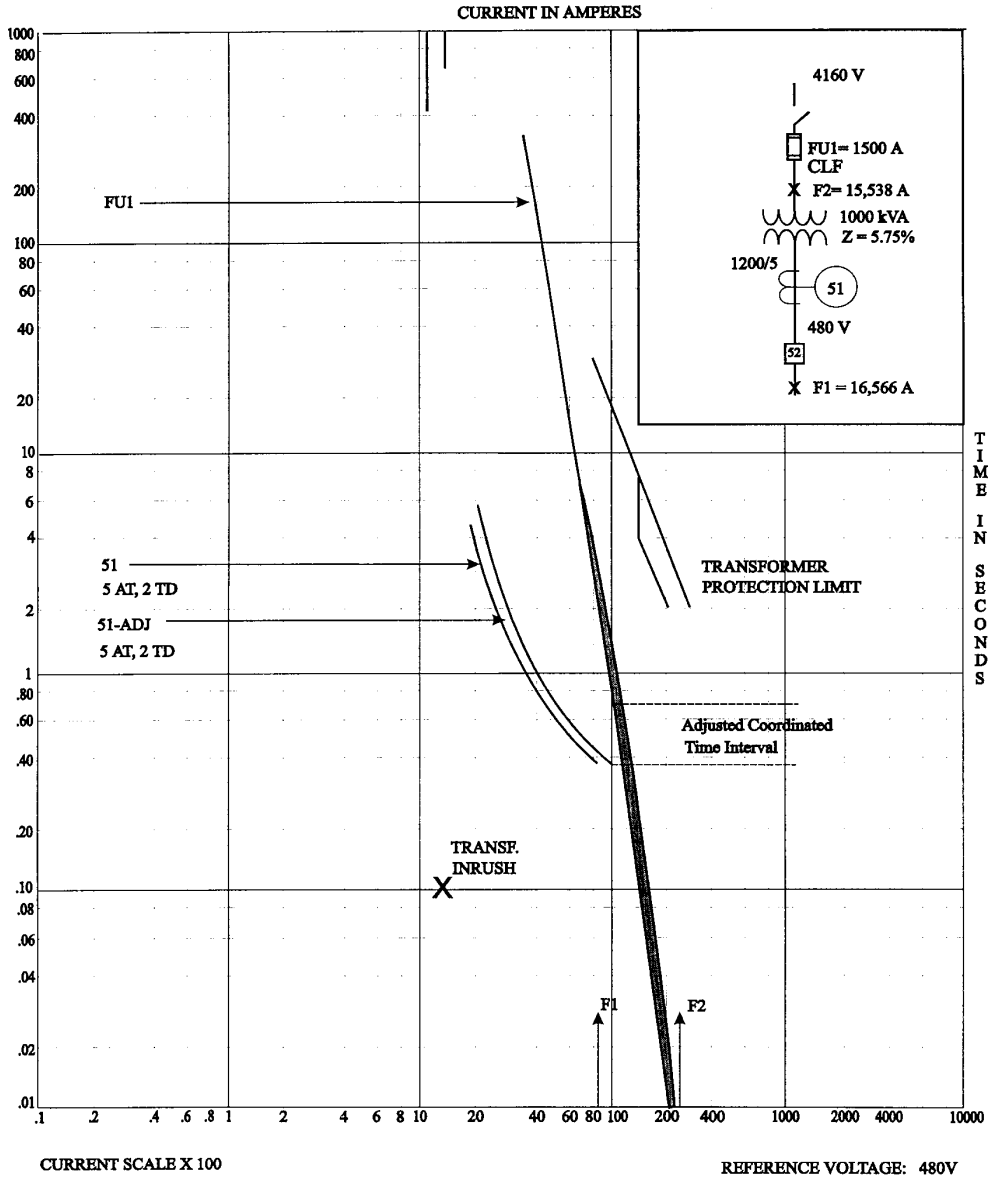

Figure 15-4b—Coordination plot for transformer primary protection using fuse

In addition, many small, low-voltage generators are protected only by MCCBs or power circuit breakers with direct-acting trip devices. These protective devices may provide fault protection for the generator, but probably will not provide any backup protection for system faults, due to the generator decrement. See 12.3 for a description of generator decrement curves.

Copyright © 2001 IEEE. All rights reserved.

Copyright The Institute of Electrical and Electronics Engineers, Inc.
Provided by IHS under license with IEEE
No reproduction or networking permitted without license from IHS
Not for Resale

15.4 Time-current characteristic plots

15.4.1 Curve interpretation

A basic understanding of TCC plots is the foundation for performing any coordination study. A TCC curve defines the operating time of a protective device for various magnitudes of operating current. Published curves assume that the operating current is consistent for the period of operation. What is generally described as a typical time-current coordination plot actually consists of multiple device curves plotted on a single page. The device curves are plotted on log-log paper with time on the ordinate and current on the abscissa. The time scale normally covers a range from 0.01 s to 1000 s; however, any desired current scale can be obtained by simply multiplying the existing scale by an appropriate factor of ten. The multiplying factor chosen and the voltage level on which the currents are based should be noted on the coordination plot.

On a typical coordination plot, time zero is considered as the time at which the fault occurs, and all times shown on the plot are the elapsed time from that point. The relative position of the device characteristic curves on the plot reflects the response time of each device for a given fault-current magnitude. The region below and to the left of the characteristic curve is the nonoperate area. For current magnitudes and durations in this region, the overcurrent device does not operate. The region above and to the right is the operate (or tripping) area. For simple radial systems, all devices between the fault and the power source experience roughly the same fault current.

Starting at time 0.01 s and a given value of fault current and proceeding upwards along the plot at the value of fault current, the first device whose curve is intersected should be the first device to operate. The intersection at this point also indicates the device operating time. Continuing along the abscissa, the next curve should be the closest upstream protective device, which provides backup protection. In general, to minimize the loss of service, this upstream device should not operate until the first device is given adequate time (or margin) to detect and clear the fault.

15.4.2 Curve variations

In order to coordinate various combinations of devices, an understanding of their operation and characteristic curve is necessary. Two basic forms of characteristic curves are drawn: single-line and banded. The single-line curve, characteristic of overcurrent relays, indicates the approximate time that the device will close its contacts to initiate the opening of a circuit breaker. As shown in Figure 15-5a, for current F_1, the device operates at time T_1. The total time for the fault to be cleared is time T_1 plus setting errors, manufacturing tolerances, and breaker tripping time. Interrupting times for medium- and high-voltage circuit breakers activated from a relay signal are typically on the order of 1.5 cycles to 8 cycles. The interrupting times of low-voltage circuit breakers (either power or air frame) and insulated case circuit breakers (ICCBs) are acknowledged to be in the range of 3 cycles to 5 cycles. MCCBs can have clearing times as low as 0.5 cycle.

Copyright © 2001 IEEE. All rights reserved.

Copyright The Institute of Electrical and Electronics Engineers, Inc.
Provided by IHS under license with IEEE
No reproduction or networking permitted without license from IHS Not for Resale

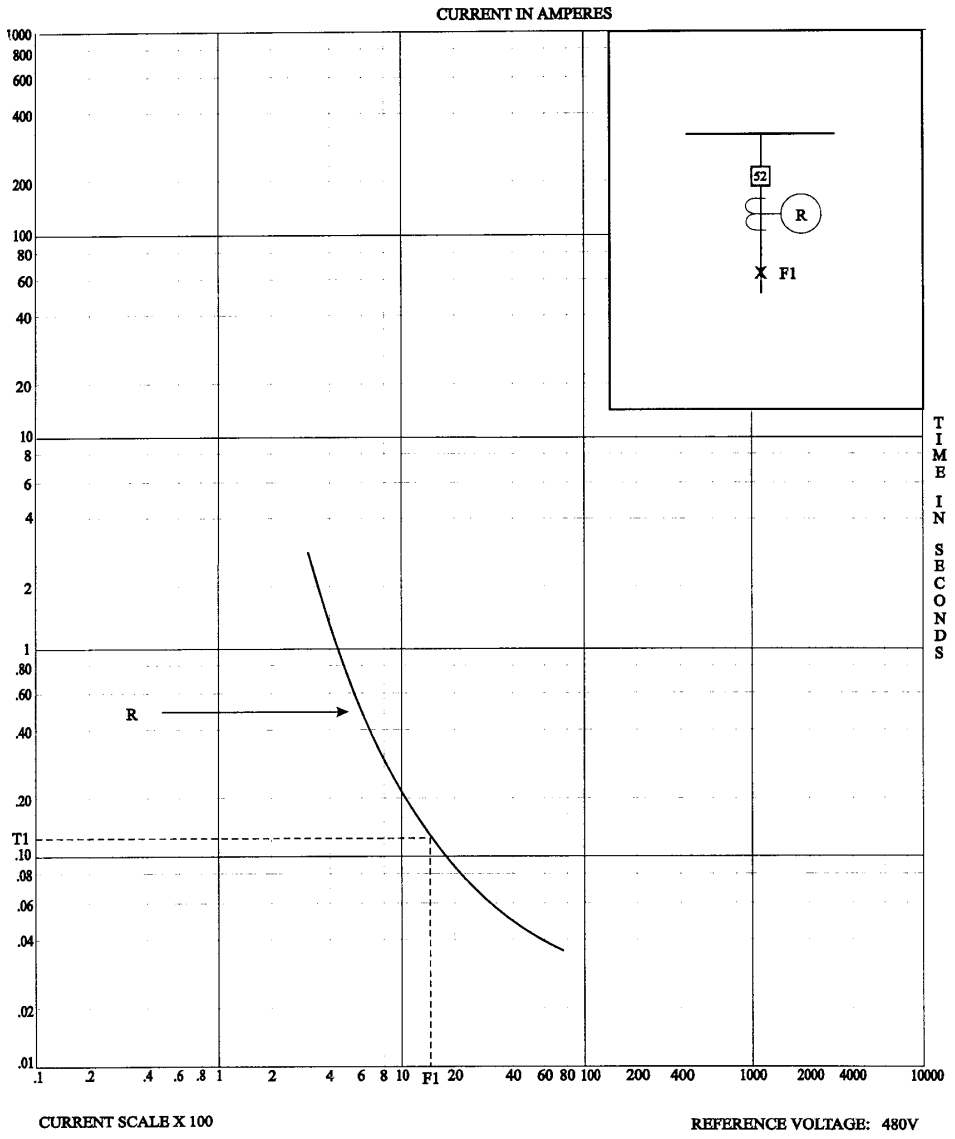

Figure 15-5a—Overcurrent trip time characteristic for a given fault for a protective relay

The banded curve, characteristic of fuses and low-voltage circuit breakers, includes tolerances and operating time. As shown in Figure 15-5b, T_1 is the maximum time that fault F_1 can exist before the device initiates operation. Time T_2 represents the maximum time that the device should take to interrupt and clear the fault. Various overcurrent devices, characteristic curves particular to each, and coordinating methods of each are discussed in 15.4.3 through 15.4.6.

Copyright © 2001 IEEE. All rights reserved.

Copyright The Institute of Electrical and Electronics Engineers, Inc.
Provided by IHS under license with IEEE
No reproduction or networking permitted without license from IHS
Not for Resale

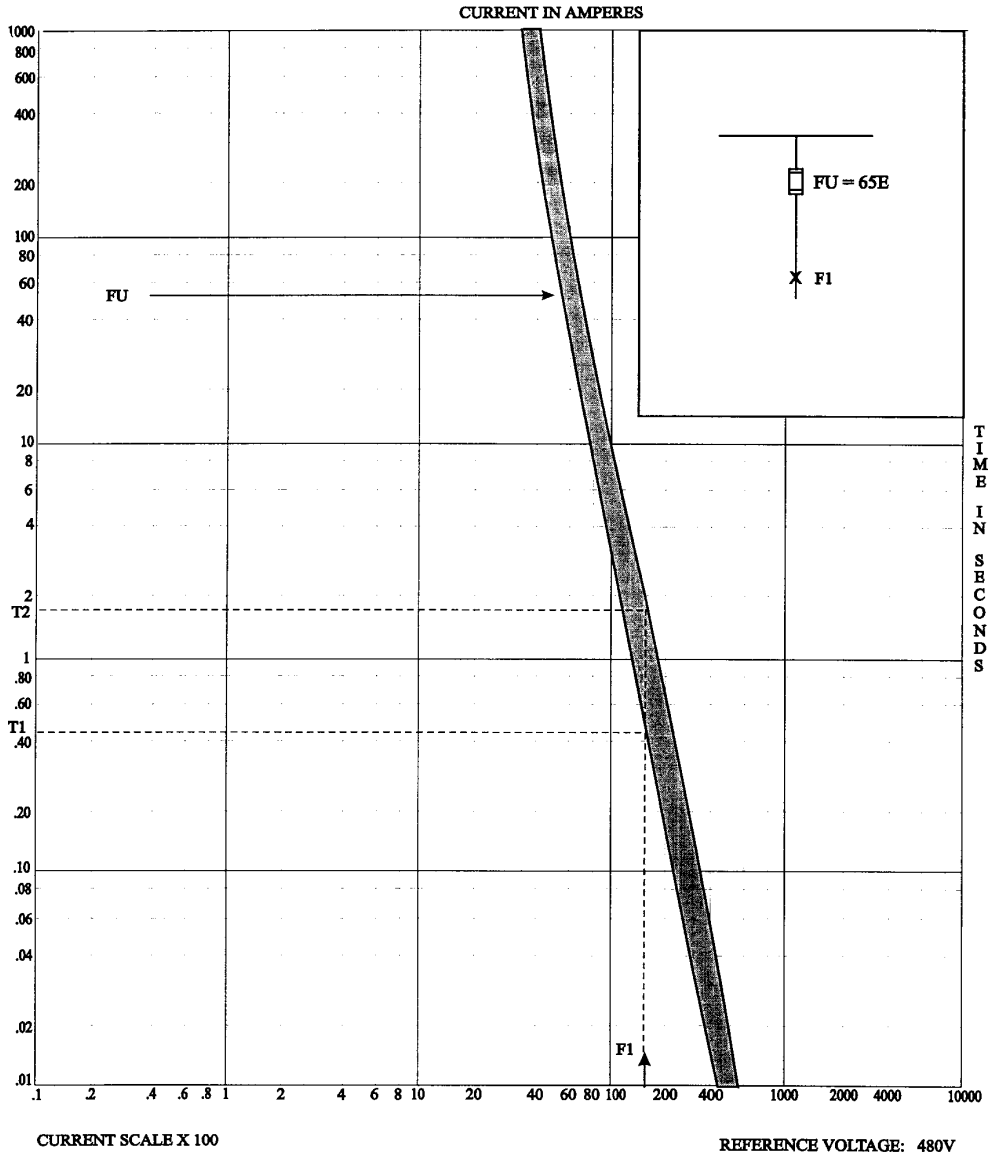

Figure 15-5b—Overcurrent trip time characteristic for a given fault for a fuse

15.4.3 Time-overcurrent relays

A time-overcurrent relay characteristic is generally plotted as a single-line curve. Curves for specific relays are provided by the manufacturer on log-log paper and include the available range of time-delay (or time-dial) settings. The term *time dial* originates from the

Copyright © 2001 IEEE. All rights reserved.

Copyright The Institute of Electrical and Electronics Engineers, Inc.
Provided by IHS under license with IEEE
No reproduction or networking permitted without license from IHS
Not for Resale

electromechanical time-overcurrent relays that have a dial with continuous adjustment from typically 0.5 to 10. Indentations on the dial correspond to the characteristic curve numbers provided by the manufacturer. Selection of any other position requires curve extrapolation and testing of the relay to ensure proper settings.

The term *time dial* has carried over to static relays where adjustment of the time delay is also provided. The major difference is that static technology provides a greater degree of curve selectivity and accuracy.

Figure 15-6 shows a typical family of relay time-dial curves. For a given current, the time-dial selection indicates the time required for the relay to close its output contacts. The higher the time-dial setting, the greater the time to contact closure. This feature is useful when CTIs are being established (see 15.5). The characteristic curve can be moved on the coordination plot as required to achieve coordination.

The pickup current of the relay is determined by the CT ratio and the tap setting of the relay. The pickup current selection provides the flexibility to move the characteristic left and right on the coordination plot, and the time dial provides adjustment up and down.

Characteristics of time-overcurrent relays have historically been defined as either inverse or definite time. The definite-time relay operates within a given time regardless of the magnitude of the current, as long as the current is generally several multiples of minimum pickup and below the saturation limit of the CTs. The inverse time-delay relay has an operating time that is inversely proportional to the current magnitude. In other words, the higher the fault current magnitude, the faster the relay operates. Manufacturers may also offer other types of relay characteristics, such as a fixed-time curve, I^2t curve (i.e., a form of inverse-time curve), and curves corresponding to different international standards.

Within the inverse characteristic, several families of curves exist with different degrees of inversity. When exposed to a given input current above the minimum pickup value and with identical time-dial settings, an extremely inverse relay operates faster than a very inverse relay, which in turn operates faster than a standard inverse relay. Figure 15-7 shows the relative shape and inversity of the characteristics.

The relay having an inverse or very inverse characteristic is most commonly used, and ideally the same inverse characteristic is used throughout the system. Relays with definite-time characteristics are used in medium-voltage motor protection circuits, ground-fault protection, and any similar application where a wide range of fault currents may exist with few stages of coordination. Selection of relay curve characteristics is often based upon preferences or standardization. In other words, the application is more of an art than a science.

Copyright © 2001 IEEE. All rights reserved.

--`,,`-`-`,,`,,`,`,,`---

Copyright The Institute of Electrical and Electronics Engineers, Inc.
Provided by IHS under license with IEEE
No reproduction or networking permitted without license from IHS
Not for Resale

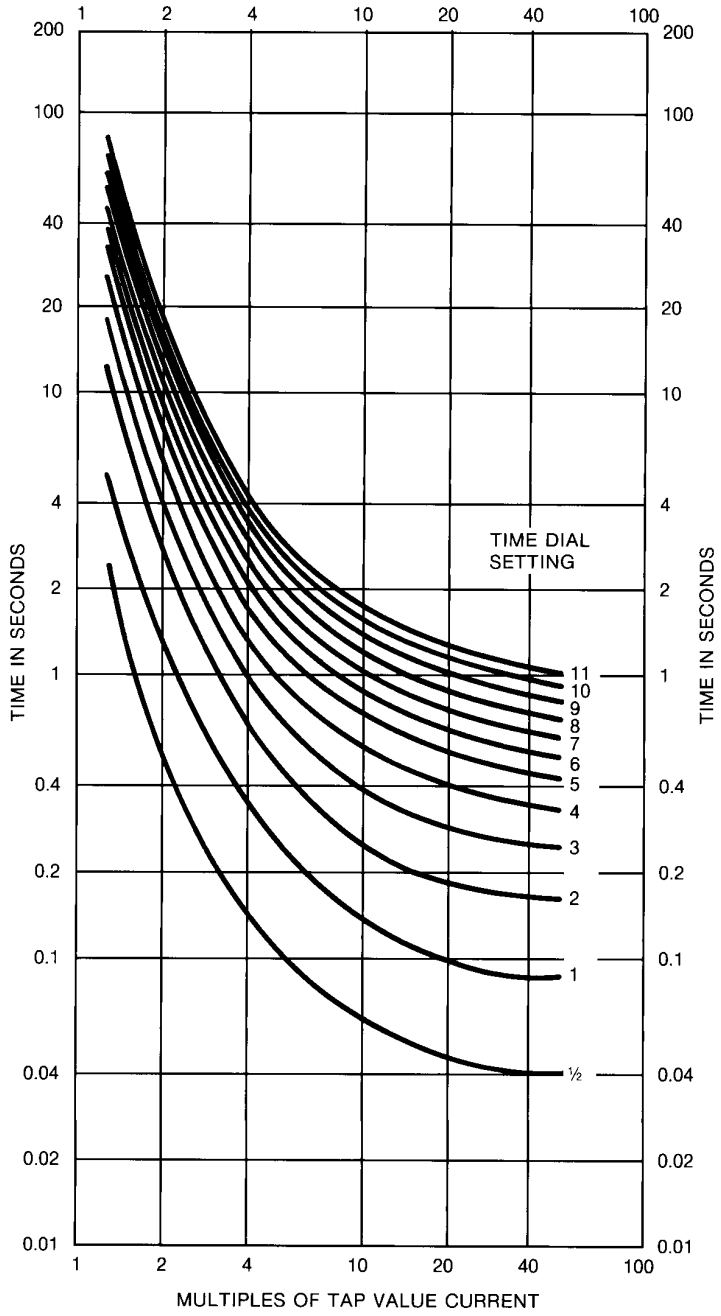

Figure 15-6—Typical time-current curves for very inverse-time relay

Copyright © 2001 IEEE. All rights reserved.

Copyright The Institute of Electrical and Electronics Engineers, Inc.
Provided by IHS under license with IEEE
No reproduction or networking permitted without license from IHS
Not for Resale

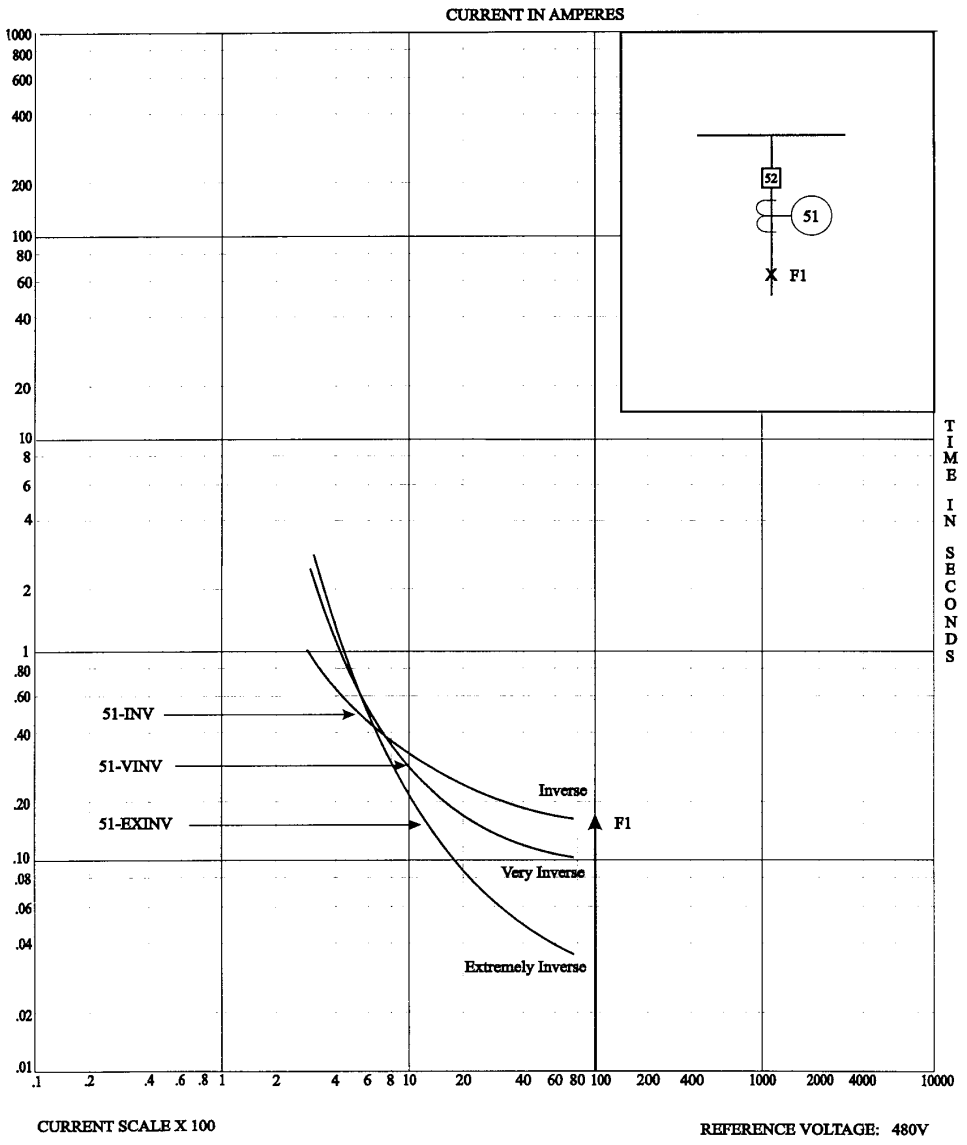

Figure 15-7—Relative shape and inversity of typical relay time-current curves

Copyright © 2001 IEEE. All rights reserved.

Copyright The Institute of Electrical and Electronics Engineers, Inc.
Provided by IHS under license with IEEE
No reproduction or networking permitted without license from IHS
Not for Resale

15.4.4 Low-voltage circuit breakers

Low-voltage circuit breaker characteristics are usually plotted as banded curves and are available in a variety of forms depending on the manufacturer and type of circuit breaker. Electronic trip devices are used primarily on LVPCBs, but can also be found on ICCBs and MCCBs. These devices offer adjustable long-time, short-time, instantaneous, and ground-fault protection. The manufacturer's curve should be used to plot each portion of the characteristic to form the composite curve. Depending upon the application, any or all of the options can be used. Figure 15-8 illustrates a typical electronic breaker characteristic.

Tripping characteristics of thermal-magnetic MCCBs offer fewer selections than the electronic trip breakers. The thermal element provides overload protection while the magnetic element provides short-circuit protection. The most common characteristic, illustrated in Figure 15-9, has a fixed long-time pickup and an adjustable instantaneous pickup. Higher rated MCCBs sometimes have adjustable long-time pickup or even electronic trip units. Small MCCBs typically have nonadjustable long-time and nonadjustable instantaneous pickup settings.

MCCBs with only magnetic adjustable trip elements are typically used in combination motor starters for short-circuit protection. This characteristic is a simple instantaneous pickup as shown in Figure 15-10. For more detailed discussion of these and other low-voltage circuit breakers, see Chapter 7.

15.4.5 Multifunction motor protection relays

Most motor protection relays are static devices that provide overload and short-circuit protection in addition to a wide variety of other protection capabilities. Some motor protection relays include motor control functions as well. The relay can be used for either total motor protection (i.e., as when installed on a circuit breaker starter) or in combination with a fuse, which provides short-circuit protection. Figure 15-11a and Figure 15-11b illustrate these two combinations.

15.4.6 Fuses

Fuse characteristics are typically provided by the manufacturer on two curves. These curves correspond to the minimum melting and total clearing times for each fuse size shown. When combined on a coordination plot, these curves form a banded characteristic that indicates the total operating time of the fuse from the time it begins to melt until the fault is totally cleared. These characteristics are shown in Figure 15-5b. See Chapter 5 and Chapter 6 for more information on low- and high-voltage fuses, respectively.

15.5 CTIs

When plotting coordination curves, certain time intervals should be maintained between the curves of various protective devices to ensure correct selective operation and to reduce nuisance tripping. Without adequate CTIs, these protective devices could trip incorrectly.

Copyright © 2001 IEEE. All rights reserved.

Copyright The Institute of Electrical and Electronics Engineers, Inc.
Provided by IHS under license with IEEE
No reproduction or networking permitted without license from IHS Not for Resale

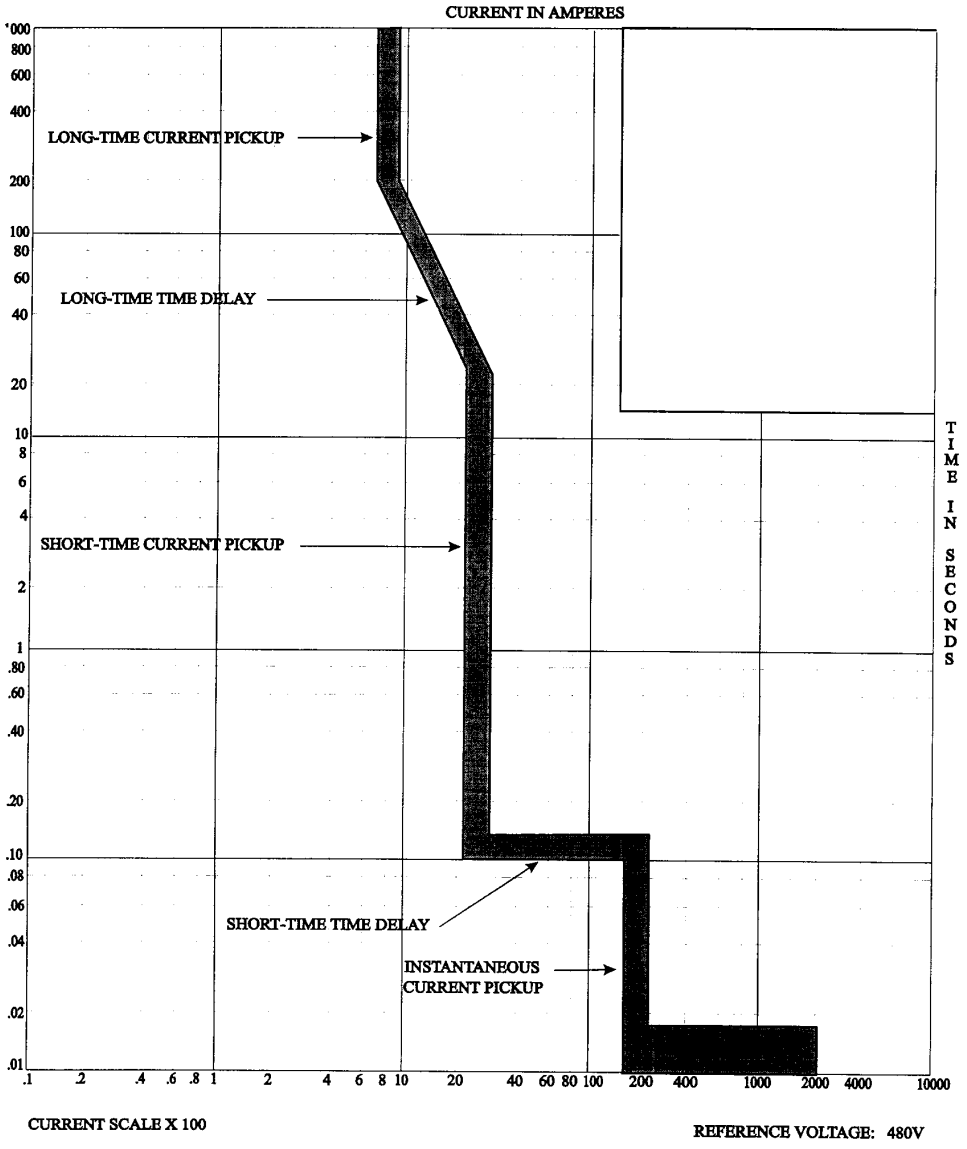

Figure 15-8—Typical electronic low-voltage circuit breaker trip characteristic

Copyright © 2001 IEEE. All rights reserved.

Copyright The Institute of Electrical and Electronics Engineers, Inc.
Provided by IHS under license with IEEE
No reproduction or networking permitted without license from IHS
Not for Resale

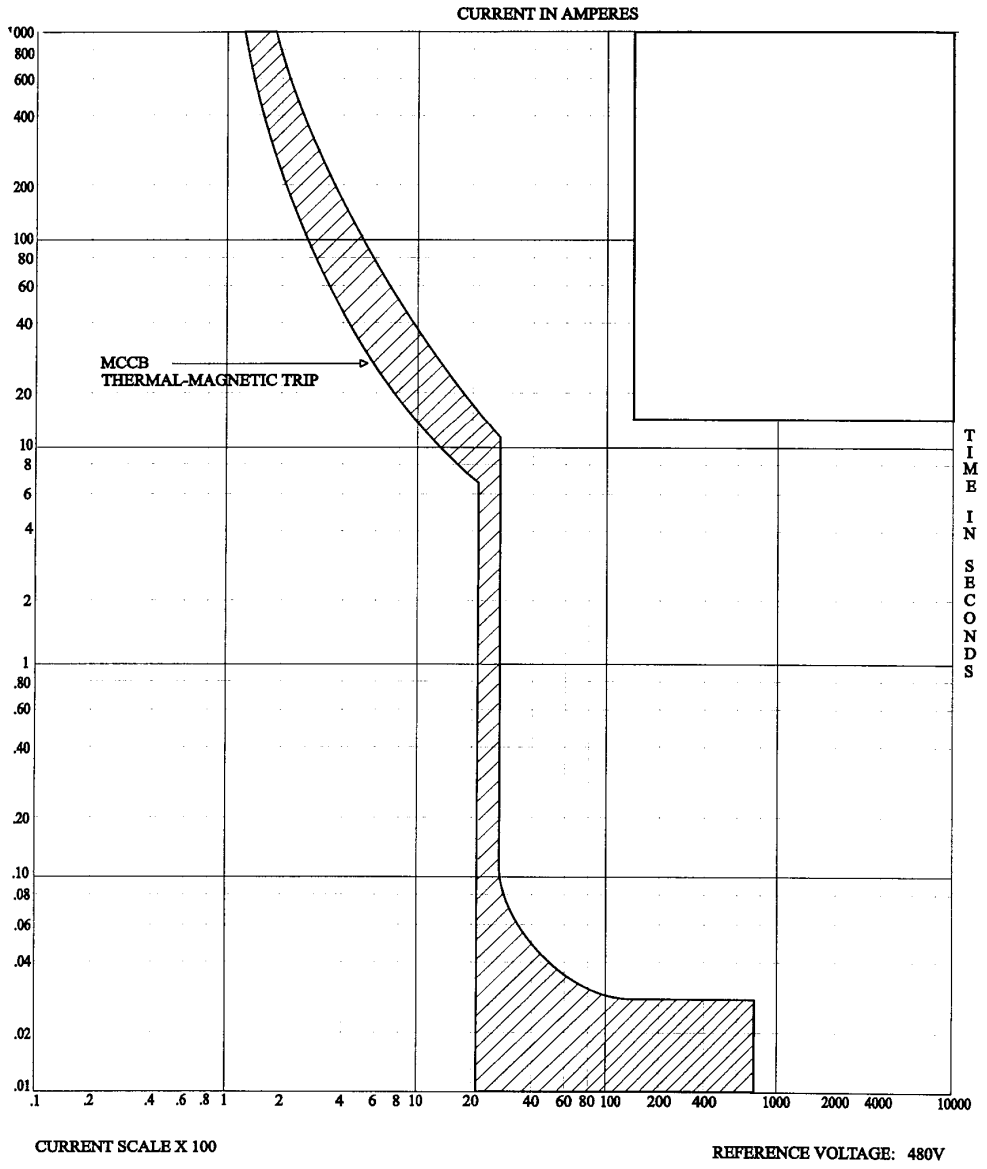

Figure 15-9—Thermal-magnetic MCCB operating characteristic

Copyright © 2001 IEEE. All rights reserved.

Copyright The Institute of Electrical and Electronics Engineers, Inc.
Provided by IHS under license with IEEE
No reproduction or networking permitted without license from IHS
Not for Resale

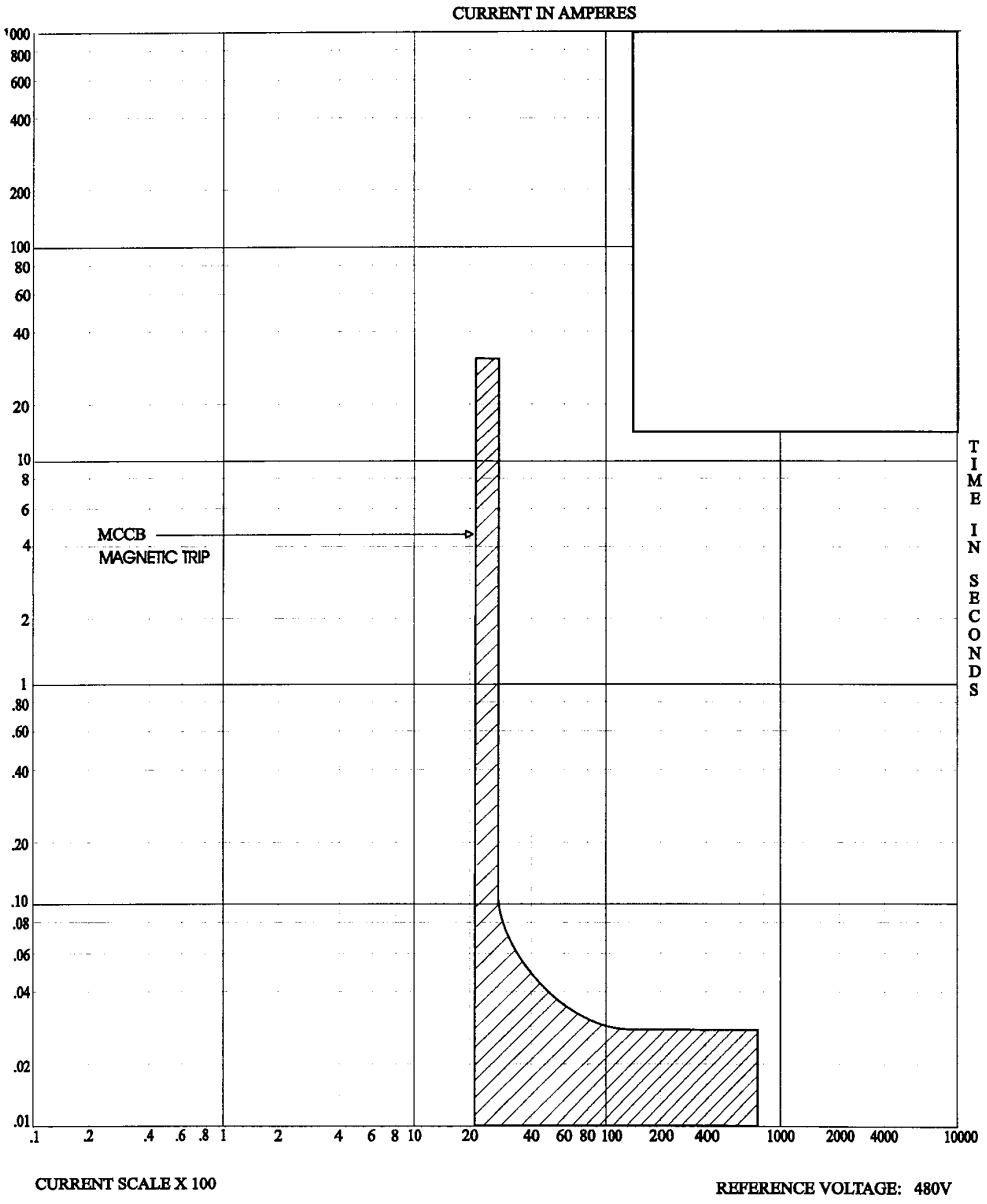

Figure 15-10—Magnetic-trip MCCB operating characteristic

Copyright © 2001 IEEE. All rights reserved.

Copyright The Institute of Electrical and Electronics Engineers, Inc.
Provided by IHS under license with IEEE
No reproduction or networking permitted without license from IHS
Not for Resale

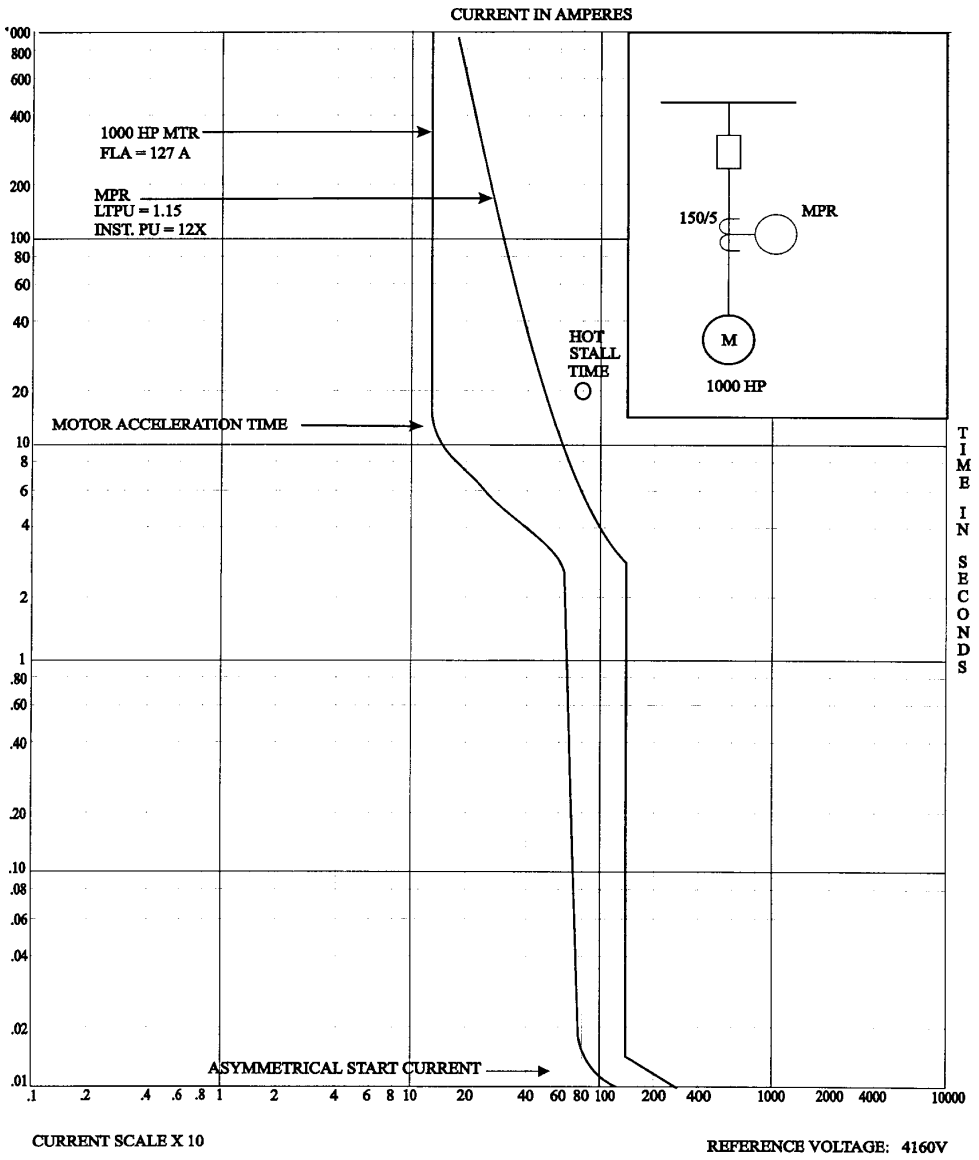

Figure 15-11a—Motor protection using a motor protection relay

Copyright © 2001 IEEE. All rights reserved.

Copyright The Institute of Electrical and Electronics Engineers, Inc.
Provided by IHS under license with IEEE
No reproduction or networking permitted without license from IHS
Not for Resale

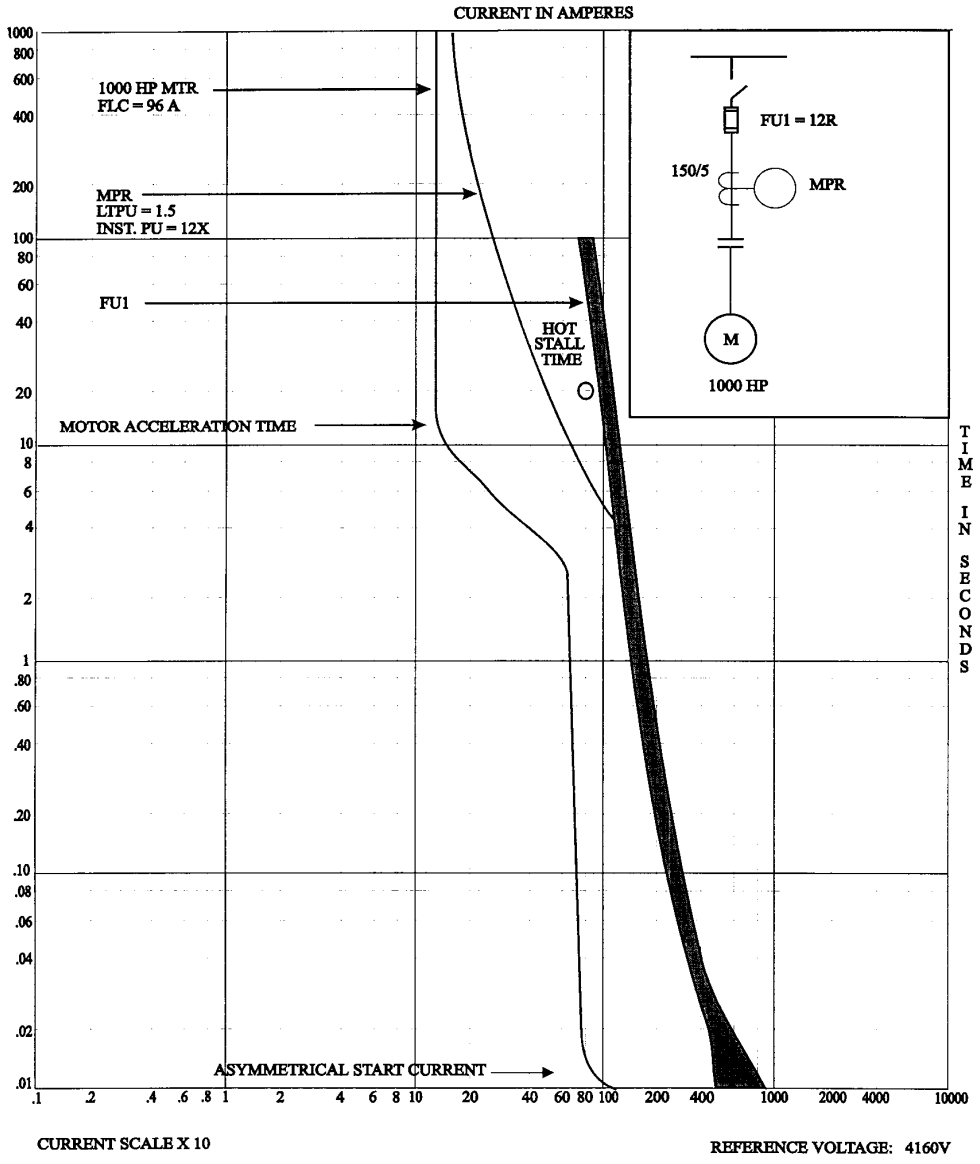

Figure 15-11b—Motor protection using a motor protection relay in combination with a fuse

Copyright The Institute of Electrical and Electronics Engineers, Inc.
Provided by IHS under license with IEEE
No reproduction or networking permitted without license from IHS
Not for Resale

The characteristic curves of overcurrent relays are single line and, as such, do not include allowances for setting errors, manufacturer's tolerances, or circuit breaker operating time. In addition, the induction disk element of electromechanical overcurrent relays typically experiences disk overtravel after the fault current is removed.

Banded characteristic curves, such as for fuses and low-voltage circuit breakers, can be easily coordinated with one another by simply allowing clearance between the characteristics plotted on the coordination curve. Some manufacturers recommend a safety factor between the minimum melt curve of the upstream fuse and the total clearing curve of the downstream fuse to avoid partial melting of the upstream fuse. In any case, the characteristic curves should not overlap.

When coordinating overcurrent relays with one another or with any other device, considering the location of the relays with respect to other devices is necessary. The CTI desired between the characteristic curves is usually 0.3 s to 0.4 s when coordinating induction disk overcurrent relays in series with one another. This interval is measured between the relay characteristic curves at the lesser value of either the instantaneous pickup setting of the downstream device or the maximum fault-current level that can be experienced simultaneously by both relays (see Figure 15-12).

All device settings should be field-calibrated. Field calibration allows the CTI to be reduced by 0.05 s and results in closer CTIs as shown in Table 15-1 and Table 15-2.

Table 15-1—CTIs without field calibration

Components	CTI without field testing	
	Electromechanical	Static
Circuit breaker opening time (5 cycles)	0.08 s	0.08 s
Relay overtravel	0.10 s	0.00 s
Relay tolerance and setting errors	0.17 s	0.17 s
Total CTI	0.35 s	0.25 s

A 0.30 s margin, representing a conservative average, is widely used in field-tested systems employing very and extremely inverse electromechanical overcurrent relays with 8-cycle breakers.

When static overcurrent relays are used, the disk overtravel component is eliminated, and the CTI can be further reduced to 0.20 s to 0.30 s. For systems using induction disk relays, disk overtravel can be reduced by employing a special high-dropout instantaneous element set at approximately the same pickup as the time element with its contact wired in series with the main relay contact. The CTI in this case is often reduced to 0.25 s to 0.35 s assuming an 8-cycle breaker.

Copyright © 2001 IEEE. All rights reserved.

Copyright The Institute of Electrical and Electronics Engineers, Inc.
Provided by IHS under license with IEEE
No reproduction or networking permitted without license from IHS Not for Resale

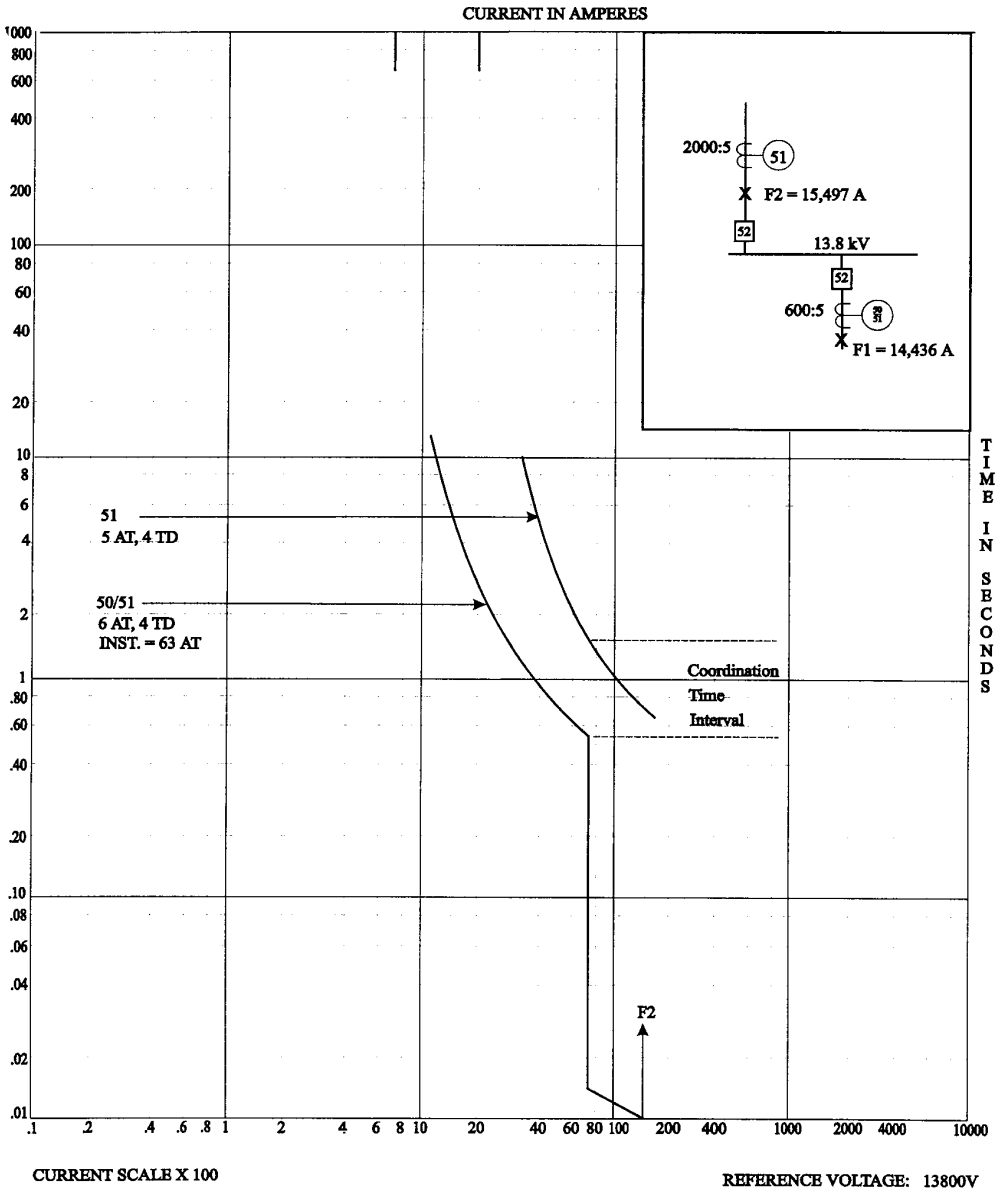

Figure 15-12—Example of CTI between two relays

Copyright © 2001 IEEE. All rights reserved.

Copyright The Institute of Electrical and Electronics Engineers, Inc.
Provided by IHS under license with IEEE
No reproduction or networking permitted without license from IHS
Not for Resale

Table 15-2—CTIs with field calibration

Components	CTI with field testing	
	Electromechanical	Static
Circuit breaker opening time (5 cycles)	0.08 s	0.08 s
Relay overtravel	0.10 s	0.00 s
Relay tolerance and setting errors	0.12 s	0.12 s
Total CTI	0.30 s	0.20 s

When coordinating relays with downstream fuses, the circuit breaker operating time is not an issue. The total clearing time of the fuse at the coordination current should be used as the starting point of the time interval. When an upstream induction disk overcurrent relay has settings calibrated by test, the interval can be set at 0.22 s (i.e., disk overtravel plus relay tolerance). If a static relay is used, the interval can be set at 0.12 s.

When coordinating relays with upstream fuses, the circuit breaker operating time becomes a factor. Allowance should be included in the coordination interval for breaker operating time along with the relay tolerance.

The coordination of relays with low-voltage circuit breakers using direct-acting trip units is similar to that of relays with fuses in that the characteristic curve of the breaker includes the operating time of the breaker. The coordination time can be determined as explained for fuses.

Table 15-3 summarizes the minimum CTIs normally encountered in industrial applications. These values represent the minimum value and need not apply to every situation. For systems with multiple cascaded devices, these intervals can be used to minimize the time-delay setting of upstream devices and limit as best possible the burning damage of the fault. For systems with few cascaded devices, more liberal intervals can be used to reduce nuisance tripping while still providing adequate protection against burning damage.

15.6 Initial planning and data required for a coordination study

Seven steps should be followed in planning a coordination study:

a) Develop a one-line diagram of the system or portion of the system involved in the study. Most of the data on this diagram are used in calculating the short-circuit currents, load-flow currents, and protective device settings and ratings. The design of the protection system should follow the recommended principles of protection outlined in other chapters of this recommended practice to minimize the number of modifications to the diagram necessary to achieve a coordinated system. The following required data for a coordination study should be shown on the diagram:

Copyright © 2001 IEEE. All rights reserved.

Copyright The Institute of Electrical and Electronics Engineers, Inc.
Provided by IHS under license with IEEE
No reproduction or networking permitted without license from IHS
Not for Resale

Table 15-3—Minimum CTIs[a]

Downstream	Upstream			
	Fuse	Low-voltage breaker	Electro-mechanical relay	Static relay
Fuse	CS[b,c]	CS	0.22 s	0.12 s
Low-voltage circuit breaker	CS[c]	CS	0.22 s	0.12 s
Electromechanical relay (5 cycles)	0.20 s	0.20 s	0.30 s	0.20 s
Static relay (5 cycles)	0.20 s	0.20 s	0.30 s	0.20 s

[a]Relay settings assumed to be field-tested and -calibrated.
[b]CS = Clear space between curves with upstream minimum-melting curve adjusted for pre-load.
[c]Some manufacturers may also recommend a safety factor. Consult manufacturers' time-current curves.

1) *Bus and circuit breaker data*. Show all bus and circuit breaker voltage, current, withstand, or interrupting ratings, and show their tripping times. Also indicate normally open or closed circuit breakers.
2) *Transformer data*. Show voltage ratings (both primary and secondary windings), kilovoltampere ratings (i.e., self-cooled, fan-cooled), impedance (include tolerances if equipment has not been manufactured), winding connections, tap positions, and type of system grounding (if resistance-grounded, show size or amperage and time rating of resistor).
3) *Generator data*. Show subtransient, transient, and synchronous reactance; kilovoltampere rating; voltage rating; connection and type of system grounding; and power factor.
4) *Cable data*. Show conductor sizes and lengths, type of conductor, temperature ratings, and conductor configurations.
5) *Utility data*. Show utility voltage, short-circuit MVA capability (e.g., the utility per-unit impedance shown on a specific kilovolt and kilovoltampere base or short-circuit current capability), and *X*/*R* ratios (e.g., three-phase, single phase-to-ground).
6) *Protective device information*. Show all relay, fuse, circuit breaker, and CT locations and connections, along with their associated trip circuits. This information should include the device number and quantity for relays; fuse minimum melting, maximum clearing, and continuous-current ratings; and the CT ratios (including indication of multiratio CTs). Show the frame size and ampere trip ratings of MCCBs, ICCBs, and LVPCBs. This information should include sensor and plug ratings and trip functions (e.g., long-time, short-time, instantaneous, ground-fault).
7) *Load data*. Show motor horsepower or kilovoltampere ratings and indicate total connected loads and standby loads (e.g., motor full-load amperes, locked-rotor

Copyright © 2001 IEEE. All rights reserved.

Copyright The Institute of Electrical and Electronics Engineers, Inc.
Provided by IHS under license with IEEE
No reproduction or networking permitted without license from IHS
Not for Resale

amperes, power factor, safe stall times, acceleration times, motor subtransient and transient reactance).

8) *Switchboard and switchgear data*.

NOTE—Switchboards built to NEMA standard may have only a 50 000 A short-circuit withstand rating, but could have a higher rating if circuit breakers larger than 3200 A are used.

b) Determine the various normal, temporary, and emergency operating configurations for the system. These configurations may affect the maximum short-circuit and load currents.

c) Determine the load flow in the system. The load current data are valuable when setting the protective devices to protect the equipment because they are used to establish cable, equipment, and protective device continuous ratings. These ratings are used to determine the minimum pickup settings of the various protective devices.

d) Determine the level of the following currents at each location in the system:
   1) Maximum and minimum momentary single- and three-phase short-circuit currents
   2) Maximum and minimum interrupting duty three-phase short-circuit currents
   3) Maximum and minimum ground-fault currents

e) Determine the characteristics of protective devices in the system and collect the TCC curves from the various protective device manufacturers on standard log-log paper. In addition to the protective device information listed in Item a) 6), obtain the specific manufacturer information, such as the model number, catalog number, style number, tap range, time-dial range, definite time-delay range, and instantaneous trip range. Much of this information is typically shown on the manufacturer's time-current curves. The range of adjustment for long-time pickup and delay, short-time pickup and delay, instantaneous trip, and ground-fault pickup and delay functions on multifunction low-voltage circuit breakers is also needed.

f) Collect the thermal damage limit curves (i.e., I^2t curves) for the various devices in the system, including for
   1) *Cables*. The cables in the system should not be exposed to short-circuit current magnitudes that damage the conductor insulation due to the high temperature levels. This includes any currents flowing to a fault beyond the cable termination. As a guide in preventing insulation damage, typical cable damage curves plotting short-circuit current levels versus time duration of the fault current (based on conductor size and temperature rating) are available in Chapter 9, in IEEE Std 141-1993, or from cable manufacturers. The system protection settings should be set so that any cable can withstand the maximum through short-circuit current for a time equivalent to the tripping time of the relay protection plus circuit breaker operating time, or the total clearing time of the fuse. This may determine the minimum conductor size applicable to a particular power system.
   2) *Transformers*. The transformers in the system also need to be protected from high levels of short-circuit currents. The transformer through-fault duration curves can be found in Chapter 11 and in IEEE Std C57.109-1993.
   3) *Motors*. The motors in the system should also be protected from high levels of currents, including both short-circuit and overload levels. Therefore, the I^2t

Copyright © 2001 IEEE. All rights reserved.

--`,,`-`-`,,`,,`,`,,`---
Copyright The Institute of Electrical and Electronics Engineers, Inc.
Provided by IHS under license with IEEE
No reproduction or networking permitted without license from IHS
Not for Resale

motor damage curve (usually not available) or a safe stall time at a locked-rotor current should be collected from the motor manufacturers for all motors in the system.

g) Determine the existing settings of the upstream or downstream overcurrent devices that have to be coordinated with the portion of the system involved in the study. This step may include collecting equipment ratings and overcurrent device settings from the utility or involve a field survey of the device settings at the existing location. The upstream relay settings may limit the selective coordination of the system.

15.7 Procedure

15.7.1 General discussion

Overcurrent coordination is a trial-and-error procedure in which the TCC curves of the various devices in series are graphically plotted on log-log paper so that selective coordination may be achieved. The device setting process is a compromise between the opposite goals of maximum equipment protection and maximum service continuity; therefore, complete selective coordination may not be achieved in all systems. The following procedure shows the logical progression of steps needed to effectively construct the time-current coordination plots and set the time-overcurrent protective devices in the system.

a) Select the circuit to be coordinated. Start at the loads in the circuit (at the lowest voltage level) and work back toward the power source. Determine the branch circuit with the largest current setting. Typically, this point will be the largest motor on the branch circuit due to the high inrush current seen during starting. However, a feeder branch circuit should be selected if it has a higher current setting.

b) Select the proper current scale. Considering a large system or one with more than one voltage transformation, the characteristic curve of the smallest device is plotted as far to the left of the paper as possible so that the curves are not crowded at the right of the paper. The maximum short-circuit level on the system is the limit of the curves to the right, unless it seems desirable to observe the possible behavior of a device above the level of short-circuit current on the system under study. The number of trip characteristics plotted on one sheet of paper should be limited. More than four or five curves on one sheet becomes confusing, particularly if the curves overlap. (Refer to Figure 15-15 and Figure 15-16 in 15.7.2.)

   All relay characteristics should be plotted on a common scale even though they are at different voltage levels. As an example, consider a system on which a 750 kVA transformer with a 4160 V delta primary and a 480 V wye secondary is the largest piece of equipment. Assume that this transformer is equipped with a primary circuit breaker and a main secondary circuit breaker supplying some feeder circuit breakers. On this system, full-load current of the transformer at 480 V is $(750 \times 10^3)/(480 \times \sqrt{3}) = 902$ A. When 902 A is flowing in the secondary of the transformer, the current in the primary of the transformer is the same value of current (i.e., 902 A) multiplied by the voltage ratio of the transformer (480/4160 = 0.115). In the case under consideration, the primary current would be $902 \times 0.115 = 104$ A. If the full-load current is established to be 1 per unit, then 902 A at 480 V = 104 A at 4160 V. As far

Copyright © 2001 IEEE. All rights reserved.

Copyright The Institute of Electrical and Electronics Engineers, Inc.
Provided by IHS under license with IEEE
No reproduction or networking permitted without license from IHS
Not for Resale

as the time-current coordination curve is concerned, both 104 A at 4160 V and 902 A at 480 V represent the same value of circuit current: full load of the 750 kVA transformer and 1 per unit current.

Plotting current on the time-current plot, 902 A at 480 V is the same as plotting 104 A at 4160 V. This type of manipulation permits the study of devices with several different system voltage levels on one coordination plot if the proper current scales are selected for the plot.

c) Draw a small one-line diagram of the circuit that is to be plotted on this curve to use as reference for the characteristic curves on the plot with the devices on the diagram.

d) On the log-log graph paper, indicate these important points (if applicable):
   1) Available maximum short-circuit currents
   2) Full-load currents of transformers and significant load-flow currents
   3) I^2t damage points or curves for transformers, cables, motors, and other equipment
   4) Transformer inrush current points
   5) The motor-starting curve indicating the locked-rotor current, full-load current, and acceleration time of the motor
   6) Short-time rating of switchboards and switchgear

e) Begin plotting the protective device characteristic curves on the plot starting at the lowest voltage level and largest load. Once a specific current scale has been selected, calculate the proper multipliers for the various voltage levels considered in the study. Characteristic curves for the protective devices and damage curves for the equipment can then be placed on a smooth bright surface such as a white sheet of paper or on an illuminated translucent viewing box or drawing box. The sheet of log-log paper on which the study is being made is placed on top of the protective device characteristic curve or equipment damage curve with the current scale of the study lined up with that of the device or damage curves. The curves for all the various settings and ratings of devices being studied may then be traced or examined.

The selective coordination of the protective devices should be based on the limiting characteristics of the particular devices in series (including the coordination intervals mentioned in 15.5), the boundaries imposed on the various protective devices by the full-load currents, short-circuit currents, motor-starting currents, thermal damage curves, and any applicable standards or NEC requirements.

15.7.2 Example of step-by-step phase coordination study

The following steps represent a sample phase coordination study:

a) *One-line diagram*. Draw the one-line diagram of the portion of the system to be studied with the ratings of all known devices shown (see Figure 15-13).

b) *Short-circuit current study*. Calculate or obtain the short-circuit current values available at different points in the system. The short-circuit currents shown in Table 15-4 were obtained from a study of the system performed on a computer.

Copyright © 2001 IEEE. All rights reserved.

Copyright The Institute of Electrical and Electronics Engineers, Inc.
Provided by IHS under license with IEEE
No reproduction or networking permitted without license from IHS Not for Resale

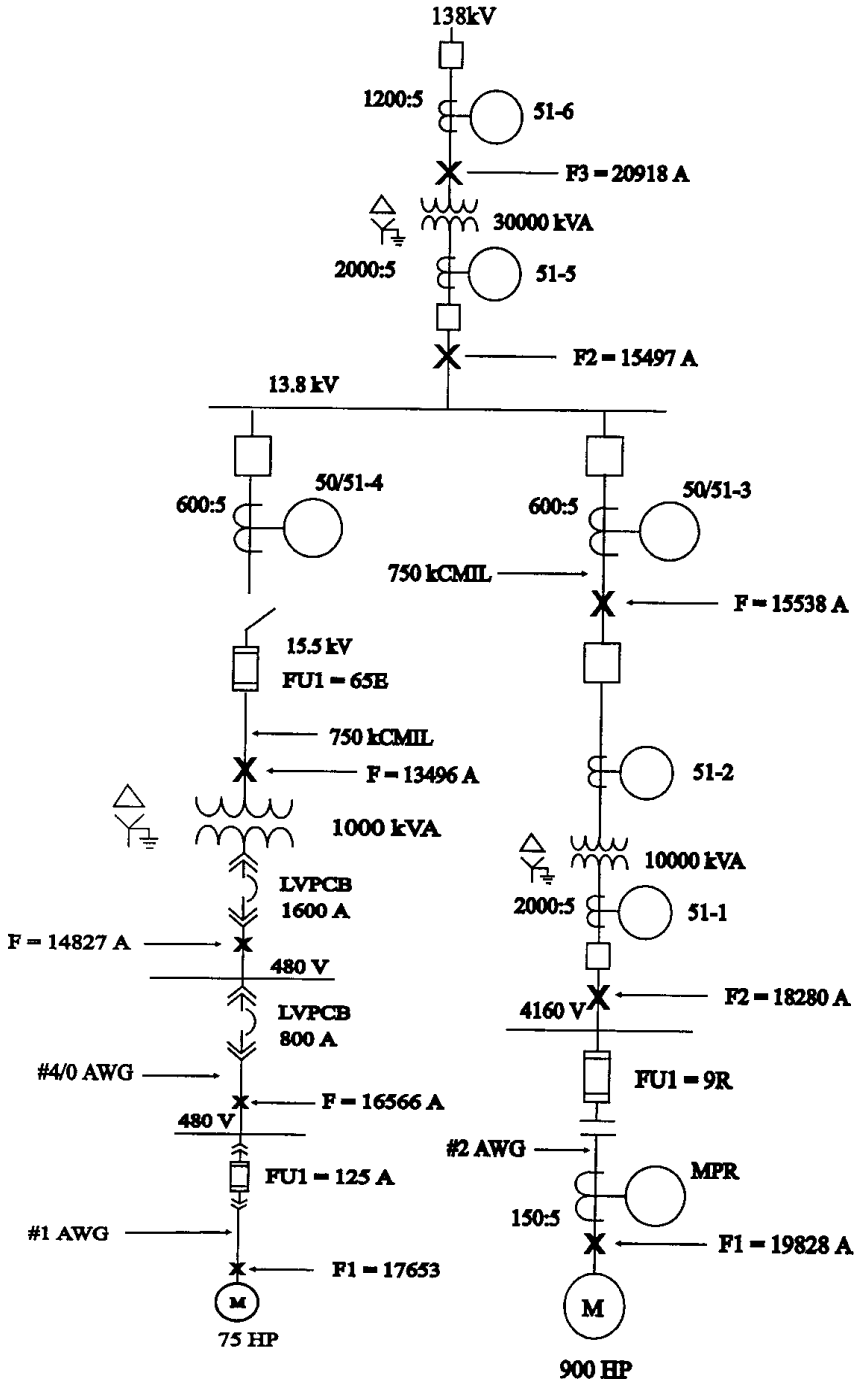

Figure 15-13—One-line diagram for coordination study

Copyright © 2001 IEEE. All rights reserved.

Copyright The Institute of Electrical and Electronics Engineers, Inc.
Provided by IHS under license with IEEE
No reproduction or networking permitted without license from IHS
Not for Resale

The maximum short-circuit currents are important because they are the upper current limit for the protective device characteristic curves to be plotted. The protective device should never have to operate above this current level. This point is also where the coordination interval is applied.

Table 15-4—Momentary (0.5 cycle) short-circuit current values at selected points in the sample system in 15.7.2 (shown at plotted voltage levels)

System voltage level	Short-circuit current (A)	Comment
138.0 kV	20 918 A at 138.0 kV	Contribution from utility
	209 180 A at 13.8 kV	
13.8 kV	15 497 A at 13.8 kV	Through-fault current contribution from 30 000 kVA transformer
	14 436 A at 13.8 kV 47 889 A at 4.16 kV	Fault current from 13.8 kV bus to 10 000 kVA substation
	13 496 A at 13.8 kV	Fault current from 13.8 kV bus to 480 V substations
	15 538 A at 13.8 kV 446 718 A at 480 V	Fault current into primary of 10 000 kVA transformer[a]
4160 V	18 280 A at 4160 V	Through-fault current contribution from 10 000 kVA transformer[a]
	19 828 A at 4160 V	Fault current into 680 kW (900 hp) motor feeder from 4160 V bus[a]
480 V	14 827 A at 480 V	Through-fault current contribution from 1000 kVA transformer[a]
	16 566 A at 480 V	Fault current into secondary 480 V bus[a]
	17 653 A at 480 V	Fault current into 55 kW (75 hp) motor feeder from 480 V bus[a]

NOTE—All short-circuit currents are rms symmetrical.

[a]These short-circuit currents include motor contribution.

c) *Protection points and protection curves.* Calculate the following protection points and protection curves:

1) *Transformer inrush point.* Calculate the transformer inrush point as follows:

$12 \times I(FLA) = I(INRUSH)$ at 0.1 s

30 000 kVA transformer: $12 \times 1255 = 15\,060$ A at 13.8 kV

10 000 kVA transformer: $12 \times 1388 = 16\,656$ A at 4160 V

Copyright © 2001 IEEE. All rights reserved.

--`,-`-`,,`,,`,`,,`---
Copyright The Institute of Electrical and Electronics Engineers, Inc.
Provided by IHS under license with IEEE
No reproduction or networking permitted without license from IHS
Not for Resale

$8 \times I(FLA) = I(INRUSH)$ at 0.1 s

1000 kVA transformer: $8 \times 1202 = 9616$ A at 480 V

2) *ANSI transformer through-fault-current protection curve.* The transformer protection curves used in this example are based on IEEE Std C57.109-1993 (specifically, Figure 2 for the 1000 kVA transformer and Figure 3 for the 10 000 kVA and 30 000 kVA transformers). The infrequent fault curves were used in this example. The frequent fault curves should be used for transformers feeding long overhead lines. Most computer-based coordination programs have these curves on file for the various transformer types and various conditions in a typical system.

   When a delta-wye transformer is involved in a system, a line-to-ground fault producing a 100% fault current in the secondary winding produces only 58% fault current ($1/\sqrt{3}$) in each of two phases of the incoming line to the primary of the transformer. In other words, the indicated current of the ANSI curve must be decreased to 58% of the value for three-phase faults.

   The following calculates two points from these curves at 2 s and 50 s for plotting:

   $I(FLA) \times 25 \times 0.58 = I(point1)$ at 2 s

   $I(FLA) \times 5 \times 0.58 = I(point1)$ at 50 s

   30 000 kVA transformer: $1255 \times 25 \times 0.58 = 18\,197$ A at 2 s (13.8 kV)

   30 000 kVA transformer: $1255 \times 5 \times 0.58 = 3640$ A at 50 s (13.8 kV)

   10 000 kVA transformer: $1388 \times 25 \times 0.58 = 20\,126$ A at 2 s (4160 V)

   10 000 kVA transformer: $1388 \times 5 \times 0.58 = 4025$ A at 50 s (4160 V)

   10 000 kVA transformer: $1202 \times 25 \times 0.58 = 17\,429$ A at 2 s (480 V)

   10 000 kVA transformer: $1202 \times 5 \times 0.58 = 3486$ A at 50 s (480 V)

3) *Cable damage curves.* Most computer-based coordination programs have these curves on file in the database for the different sizes and types of cables. Cable manufacturers publish these curves on log-log paper for direct input onto the coordination plots for manual plotting. They can also be used to check the accuracy of the database curves. The curves used in the example are based on an initial temperature of 75 ˚C and final temperature of 200 ˚C. The curves can also be found in Chapter 9.

4) *Motor safe stall time, full-load current, locked-rotor current, and acceleration time.* The engineer or analyst should request this data from the motor manufacturer.
   - 55 kW (75 hp) motor: 96 A full-load current, 576 A locked-rotor current, 7 s acceleration time, 22 s safe stall time hot and cold (at locked-rotor current).
   - 680 kW (900 hp) motor: 110 A full-load current, 660 A locked-rotor current, 7 s acceleration time, 17 s safe stall time hot and cold (at locked-rotor current).

Copyright © 2001 IEEE. All rights reserved.

Copyright The Institute of Electrical and Electronics Engineers, Inc.
Provided by IHS under license with IEEE
No reproduction or networking permitted without license from IHS
Not for Resale

d) *Scale selection*. Examine the range of currents to be depicted at different voltages. (Select a current scale that minimizes multiplication and manipulations on devices where a range of settings is available. Typically, the scale is the system current levels multiplied by a factor of 1, 10, or 100 at the base voltage level selected. The scale needs to be selected so that all device characteristic curves, protection curves, full-load currents, and short-circuit currents can be placed on the same plot without overcrowding. A manipulation occurs when a device at one voltage level is plotted at another voltage level.)

One way to accomplish this examination is to start plotting at the load-end device voltage level, working toward the source until the first device at the next voltage level is encountered (e.g., the device at the primary of a transformer). Plot this device with the downstream devices so that only one voltage manipulation has to be done. Then this same device can be plotted at its own voltage level with the devices upstream. This approach minimizes the number of voltage manipulations performed.

e) *480 V fuse coordination*. The coordination begins at the 480 V level load-end device (see Figure 15-14). Plot the following items on the log-log paper:

1) *Motor full-load current, locked-rotor current, and acceleration time for 55 kW motor (with the largest protective device at load end); cable damage curve; and short-circuit currents*. The low-voltage motor overload curve should be shown on the plot and is critical when instantaneous trip circuit breakers are used.

2) *Largest fuse or MCCB continuous rating*. Generally, the largest low-voltage device is plotted first, whether it is a 125 A MCCB or a 125 A fuse. The protective device characteristic curve is taped to a light box, and the graph paper is placed over the protective device curve for accurate tracing onto the plot (for manual plotting). Normally, a fuse curve is fixed; therefore, no adjustment can be made to its characteristic curve. If the motor-starting curve runs into the fuse curve, then a different fuse should be chosen within the acceptable ratings as required by NEC Table 430-152. The plot shows that the #1 AWG cable damage curve is to the right and above the fuse curve. This position indicates that the cable is adequately protected by the fuse.

f) *480 V feeder circuit breaker coordination*. The next device to be plotted is the 480 V feeder circuit breaker (i.e., Device 2) (see Figure 15-15). This device is a electronic-trip low-voltage circuit breaker with a sensor rating of 800 A. The long-time pickup is set at one times the sensor rating (or 800 A), and the long-time delay is set on Curve 2 (i.e., medium). This position adequately protects the 800 A continuous rating of the MCC bus. The short-time pickup is set at three times the sensor rating (or 2400 A), and the short-time delay is set on Curve 1 (i.e., minimum). These two short-time settings are the critical settings for proper selectivity with the downstream fuse. Many of the electronic-trip circuit breakers have an I^2t setting that allows better selectivity of the short-time settings with the downstream device if the standard curve is not selective. There is no instantaneous element so that the breaker is selective with the downstream fuse.

g) 1000 kVA transformer secondary main coordination.

1) The 1000 kVA transformer inrush and through-fault-current protection curve are now placed on the plot.

Copyright © 2001 IEEE. All rights reserved.

Copyright The Institute of Electrical and Electronics Engineers, Inc.
Provided by IHS under license with IEEE
No reproduction or networking permitted without license from IHS Not for Resale

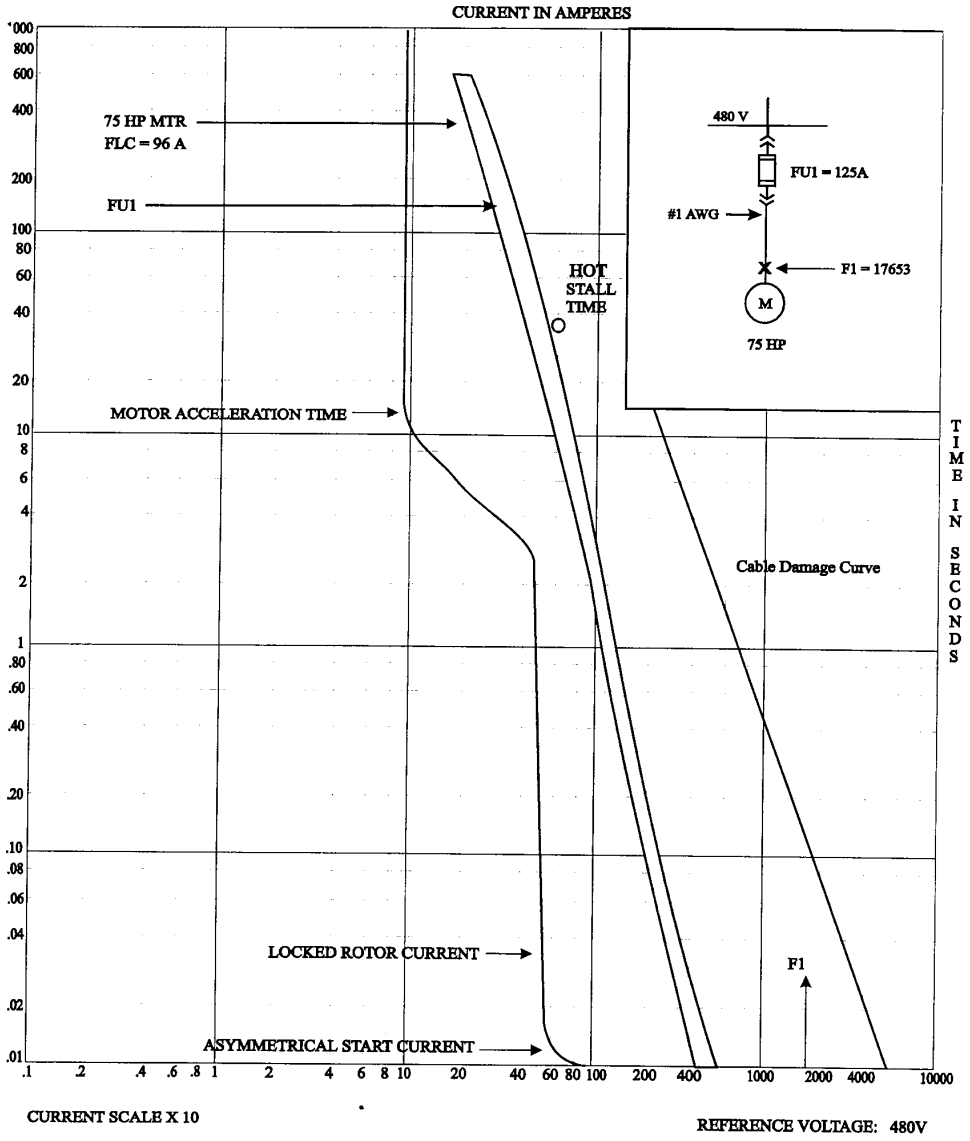

Figure 15-14—480 V fuse coordination plot

Copyright © 2001 IEEE. All rights reserved.

Copyright The Institute of Electrical and Electronics Engineers, Inc.
Provided by IHS under license with IEEE
No reproduction or networking permitted without license from IHS
Not for Resale

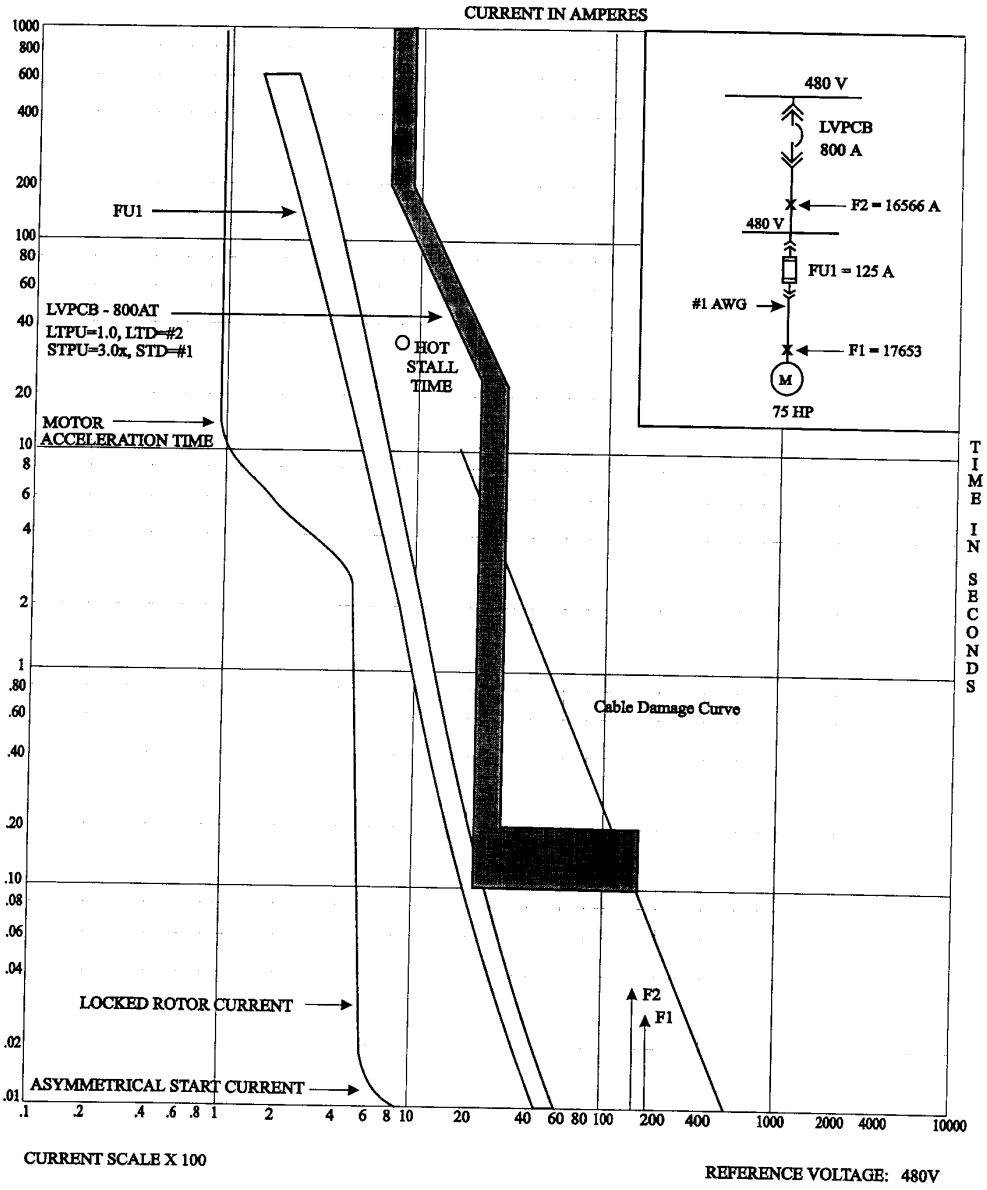

Figure 15-15—480 V feeder circuit breaker coordination plot

Copyright © 2001 IEEE. All rights reserved.

Copyright The Institute of Electrical and Electronics Engineers, Inc.
Provided by IHS under license with IEEE
No reproduction or networking permitted without license from IHS
Not for Resale

2) The next device to be plotted is the 1000 kVA transformer secondary main circuit breaker (i.e., Device 3) (see Figure 15-16). This circuit breaker characteristic curve should be above and to the right of the downstream breaker. A 1600 A long-time trip with a medium (Curve 2) long-time delay setting is selective with the downstream breaker and also allows for the full-load current rating of the 1000 kVA transformer (or 1203 A). This setting also protects the 2000 A rating of the main 480 V bus. The short-time pickup setting of 2.5 times (or 4000 A) and a medium (Curve 2) short-time delay setting allows for selectivity with the downstream breaker. The short-time pickup and long-time delay settings have also been chosen for transformer protection for short circuits downstream of the circuit breaker. The long-time setting of the circuit breaker is within the 125% required by the NEC for secondary transformer protection below 600 V at a nonsupervised location. If the I^2t characteristic of the downstream circuit breaker had been used, then the I^2t characteristic of this circuit breaker would be used for proper selectivity. While in this example liberal curve separation is effected for clarity, in actual practice many engineers prefer to use faster bands more closely stacked in order to provide faster fault clearing.

h) *1000 kVA transformer primary fuse coordination.* The next device to be plotted is the 1000 kVA transformer primary fuse (see Figure 15-17). The 15.5 kV fuse (rated 65E) is selected for transformer protection. As much of the transformer through-fault-current curve should be to the right of the fuse curve as possible. Its rating has to be less than 300% of the transformer full-load primary amperes of 42 A (65 A/42 FLA = 155%) in accordance with NEC Article 450-3. This device and all other upstream devices see the transformer inrush current. The fuse curve and the curves of all upstream devices should be above and to the right of the transformer inrush point; otherwise these devices could trip every time the transformer was energized. The downstream devices do not see the inrush current.

At times the short-time delay characteristic curve of the secondary circuit breaker extends into the primary fuse characteristic curve. In this example, loss of selectivity is a better choice than installing a larger fuse because a larger fuse would compromise adequate transformer protection. Of course, when the main secondary circuit breaker trips, all transformer load is interrupted, and the fuse operation does not interrupt any load.

At this point the 480 V system has been selectively coordinated. The next area to coordinate is the 4160 V system. Again, the coordination begins at the load-end device.

i) 4160 V to 680 kW motor protection coordination.

1) Plot the motor full-load current, locked-rotor current, acceleration time, motor hot and cold stall times, cable damage curve, and short-circuit currents.
2) Plot the overload curve for the motor protection relay (i.e., Device 1) (see Figure 15-18). This curve should be above the starting curve of the motor and below the hot and cold stall times. This position ensures that the motor is protected from thermal damage and that nuisance tripping on starting is not a problem. This multifunction relay typically picks up on overload at 115% of full-load current based on data entered into the relay (e.g., motor full-load

Copyright © 2001 IEEE. All rights reserved.

Copyright The Institute of Electrical and Electronics Engineers, Inc.
Provided by IHS under license with IEEE
No reproduction or networking permitted without license from IHS
Not for Resale

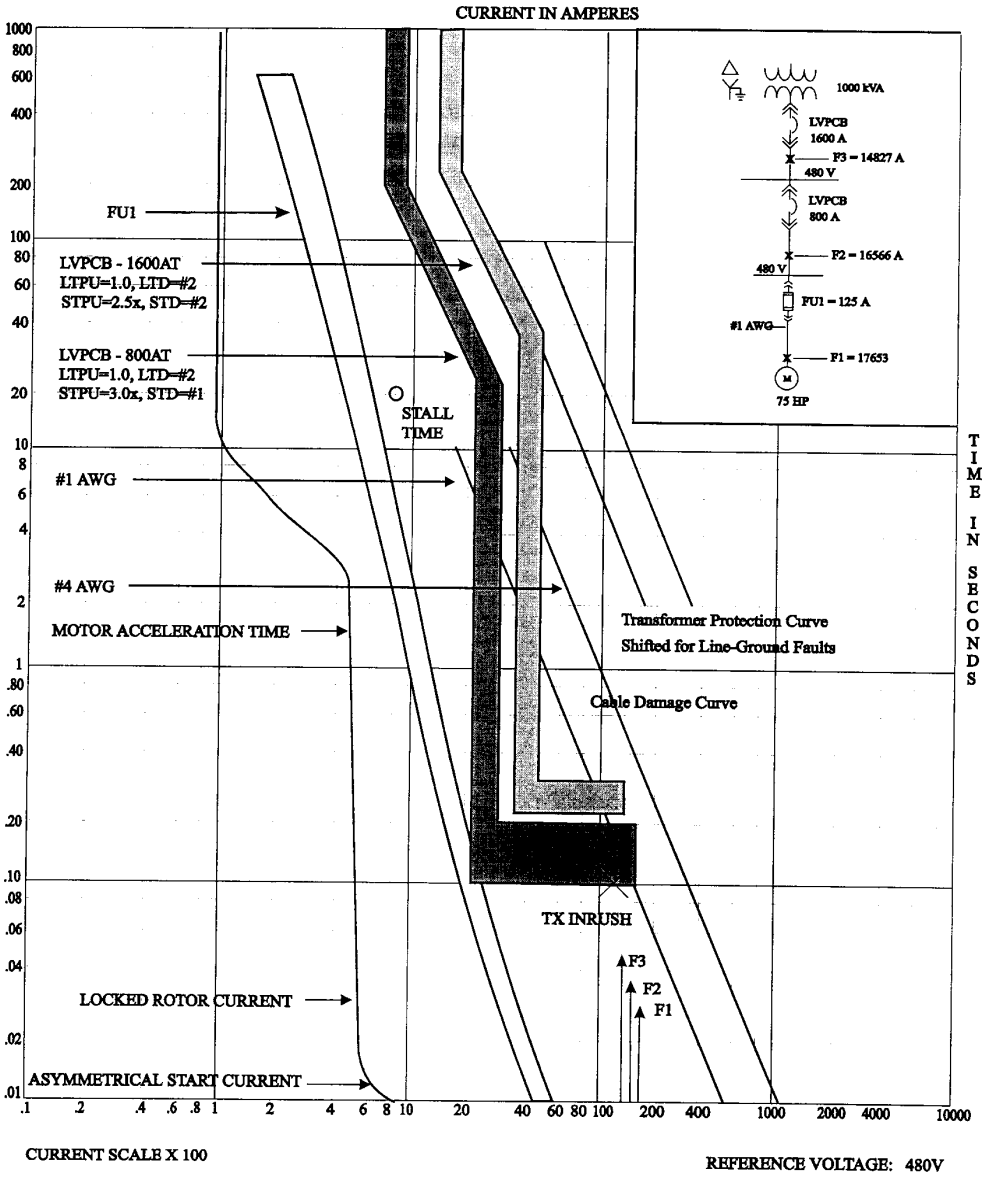

Figure 15-16—1000 kVA transformer secondary main coordination plot

Copyright © 2001 IEEE. All rights reserved.

Copyright The Institute of Electrical and Electronics Engineers, Inc.
Provided by IHS under license with IEEE
No reproduction or networking permitted without license from IHS
Not for Resale

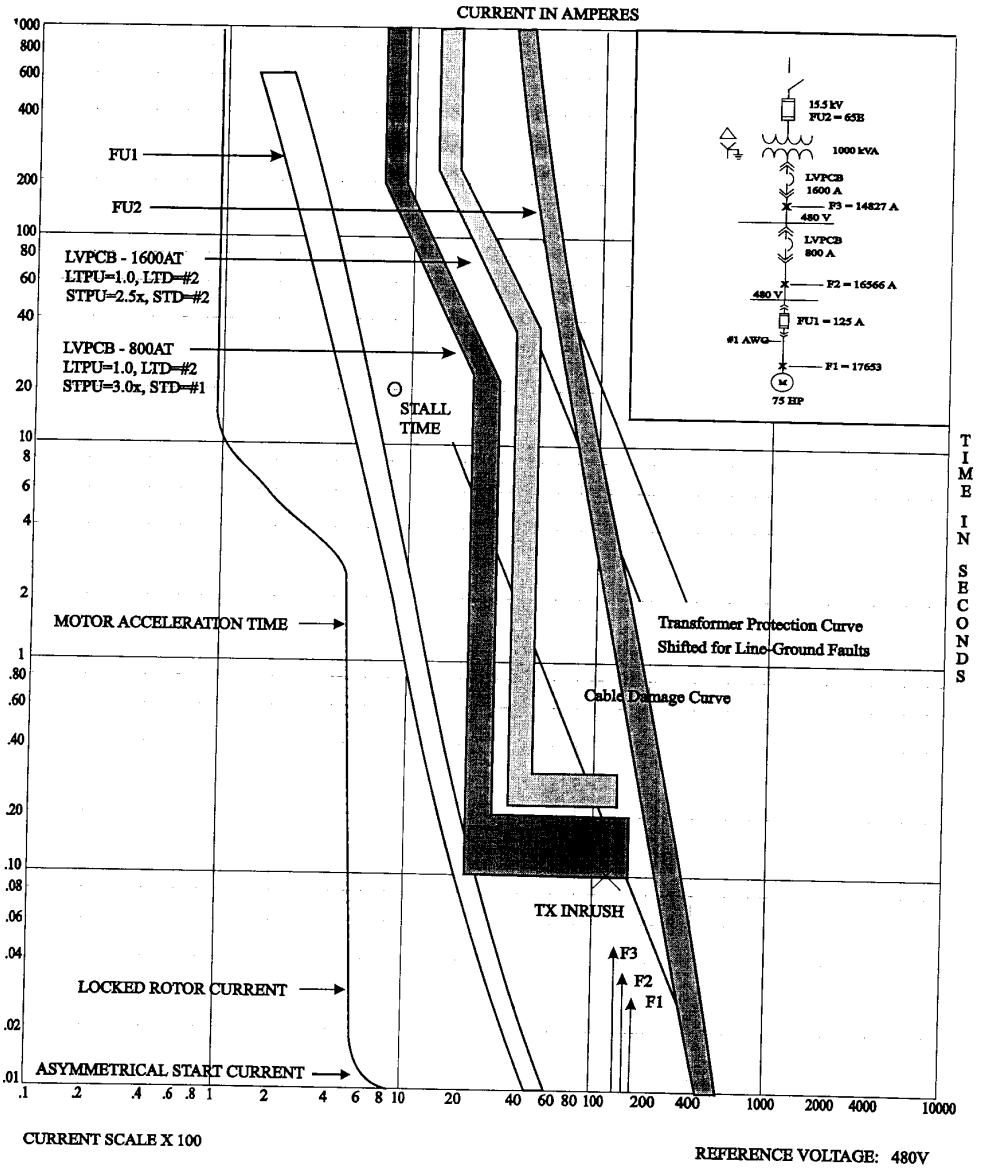

Figure 15-17—1000 kVA transformer primary fuse coordination plot

Copyright © 2001 IEEE. All rights reserved.

Copyright The Institute of Electrical and Electronics Engineers, Inc.
Provided by IHS under license with IEEE
No reproduction or networking permitted without license from IHS
Not for Resale

current, CT ratio, service factor). This relay opens the motor contactor; therefore, it should not be used for short-circuit protection. A fuse or circuit breaker needs to be used to clear short circuits.

3) Plot the largest fuse (i.e., Device 2) or circuit breaker at the load end. This type 9R fuse should protect the motor feeder cable. Therefore, it needs to be below and to the left of the 2/0 AWG cable damage curve. This fuse protects the motor from currents above the overload level.

j) *10 000 kVA transformer secondary main coordination.*

1) Plot the 10 000 kVA through-fault-current protection curve and transformer inrush point.

2) Plot the transformer secondary circuit breaker relay setting (i.e., Device 1) (see Figure 15-19). This overcurrent relay is set to pick up at 2000 A (2000/5 CT × 5AT). This setting allows the transformer forced-air rating of 12 500 kVA to be utilized (or 1735 FLA). The pickup of this relay should be below the 250% of the transformer full-load current required by NEC Article 450-3 for secondary protection (2000 A pu/1388 FLA = 145%). The setting of this relay also protects the 4160 V bus rated at 2000 A.

k) *10 000 kVA transformer primary relay coordination.* The next device to be plotted is the medium-voltage feeder relay (i.e., Device 2) (see Figure 15-20). By examination of the through-fault protection curve and the inrush point, the limits of the curve for primary protection of the 10 000 kVA transformer can be determined. Keeping in mind that a low pickup for this device is desirable for good cable protection, it is good practice to keep the characteristic curve as far to the left as practical in order to operate faster on faults. The pickup setting should be less than four times the 10 000 kVA transformer full-load amperes (or 5552 A at 4160 V), the maximum setting permitted by NEC Article 450-3. The time-dial setting was chosen for a 0.3 s coordination interval between the downstream relay (at maximum fault current) and feeder circuit breaker relay (at instantaneous setting). The instantaneous setting of 7600 A (at 13.8 kV) or 25 212 A (at 4160 V) provides better protection of the 750 kcmil cable and is set above the calculated asymmetrical short-circuit current. The 16% current margin is also satisfied over most of the relay curves.

In this example, an 800/5 A CT has been selected. The 800/5 A rating CT has a 160:1 ratio, and the tap setting times 160 produces the relay minimum pickup in terms of the primary current (160 × 6AT = 960 A). The 4160 V system has now been coordinated up to the 10 000 kVA transformer primary circuit breaker, and the 480 V system has been coordinated up to the 1000 kVA transformer primary fuse. The next area to coordinate is the 13.8 kV system up through the utility system.

l) *13.8 kV feeder relay coordination.* The next device to be plotted is the medium-voltage feeder relay (i.e., Device 3) (see Figure 15-21). This feeder relay does not provide primary protection for the 1000 kVA transformer; therefore, it can be set to pick up for the feeder full-load current (800/5 CT × 4AT = 640 A). This setup also protects the feeder cable. The instantaneous element on this feeder relay is not used because it does not allow selectivity with the 13.8 kV primary transformer fuses downstream. The largest feeder circuit breaker relay should now be coordinated with the upstream 13.8 kV main bus relays. The 4160 V substation feeder relay is also shown on this curve as a comparison with the 480 V substations feeder relay. As can

Copyright © 2001 IEEE. All rights reserved.

Copyright The Institute of Electrical and Electronics Engineers, Inc.
Provided by IHS under license with IEEE
No reproduction or networking permitted without license from IHS Not for Resale

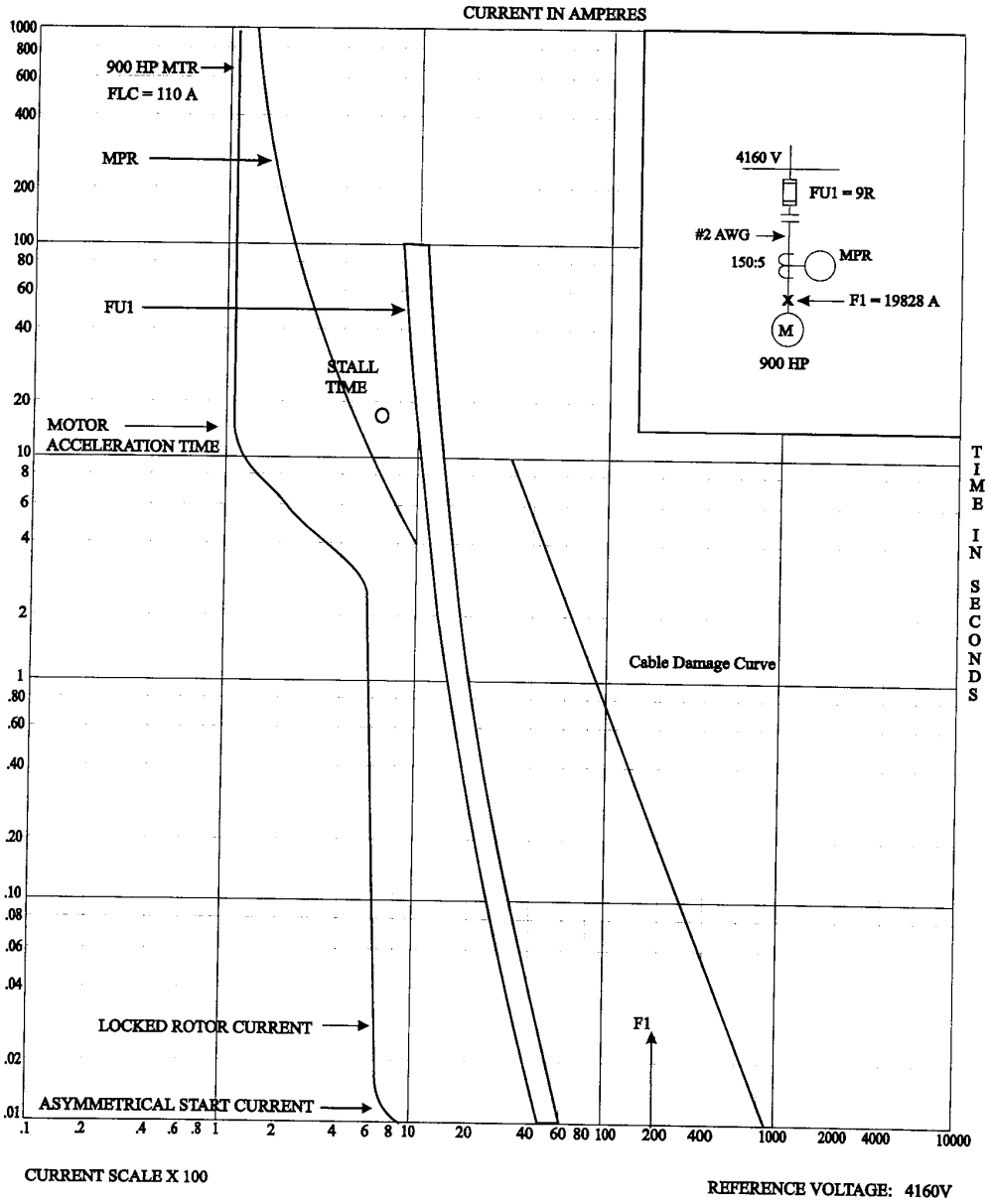

Figure 15-18—4160 V–680 kW motor protection coordination plot

Copyright © 2001 IEEE. All rights reserved.

Copyright The Institute of Electrical and Electronics Engineers, Inc.
Provided by IHS under license with IEEE
No reproduction or networking permitted without license from IHS
Not for Resale

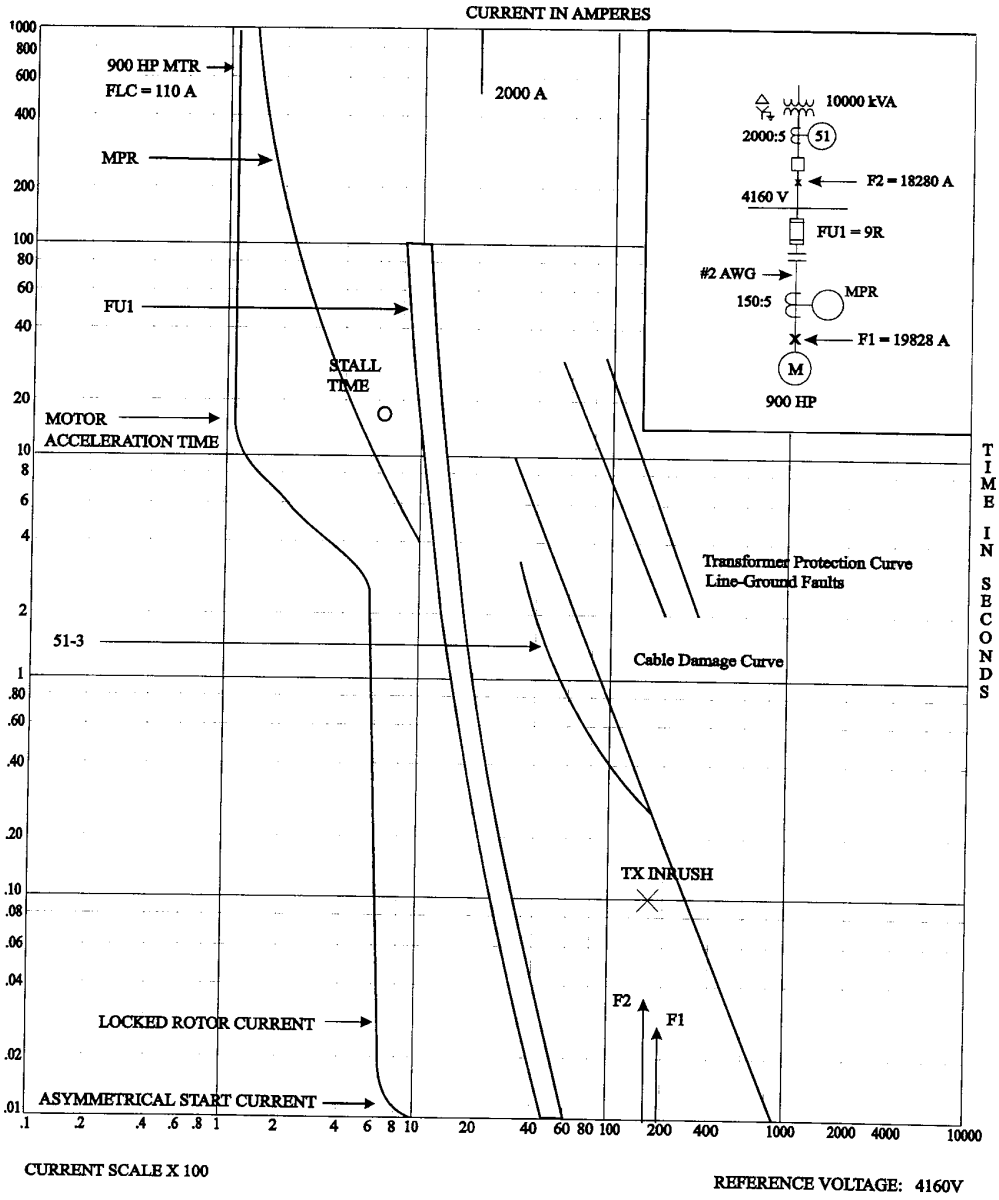

Figure 15-19—10 000 kVA transformer secondary main coordination plot

Copyright © 2001 IEEE. All rights reserved.

Copyright The Institute of Electrical and Electronics Engineers, Inc.
Provided by IHS under license with IEEE
No reproduction or networking permitted without license from IHS
Not for Resale

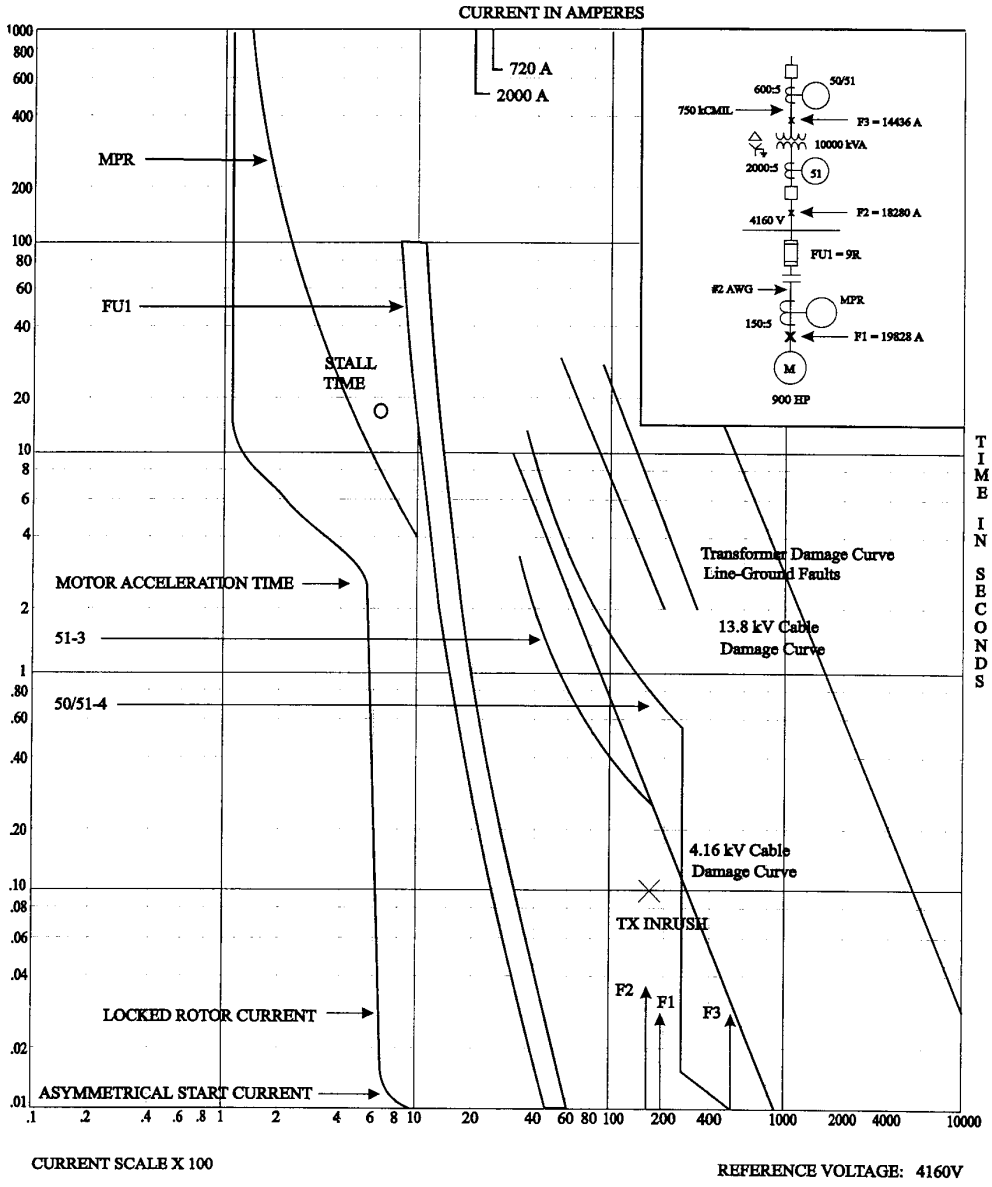

Figure 15-20—10 000 kVA transformer primary relay coordination plot

Copyright © 2001 IEEE. All rights reserved.

Copyright The Institute of Electrical and Electronics Engineers, Inc.
Provided by IHS under license with IEEE
No reproduction or networking permitted without license from IHS
Not for Resale

be seen, the feeder circuit breaker relay to the 4160 V system is used for upstream coordination because it has the highest setting. (Refer to NEC Article 240 and Article 710 for allowable settings on systems over 600 V.)

m) *30 000 kVA transformer secondary main coordination.* The next devices to be plotted are the medium-voltage main relays (i.e., Device 5) (see Figure 15-22). Select a pickup for the 30 000 kVA transformer secondary circuit breaker relays no lower than 133% of the full-load current ($1255 \times 1.33 = 1674$ A) and no higher than 250% of full-load current ($1255 \times 2.5 = 3138$ A) in accordance with NEC Article 450-3. This setup protects the transformer and allows the forced-air rating of 40 000 kVA to be utilized. A good pickup selection is 2000 A with a 2000/5 CT because this setup also protects the 2000 A rated 13.8 kV bus (2000/5 CT $\times$ 5AT = 2000 A). Do not use an instantaneous element on this relay because it cannot be made selective with the feeder instantaneous elements. Select a time-dial setting so that a delay of 0.3 s to 0.4 s is obtained at the theoretical 100% fault-current point. This margin assures coordination between the main secondary circuit breakers and the 13.8 kV feeder breakers.

n) *30 000 kVA transformer primary relay coordination.* The next device to be plotted is the transformer primary relay (i.e., Device 6) (see Figure 15-23). Select a pickup for this relay no higher than 400% of full-load current ($125.5 \times 4 = 502$ A at 138 kV, 5020 A at 13.8 kV) in accordance with NEC Article 450-3. The pickup of this relay is set at the same pickup as the secondary relay for better transformer protection and also for selectivity with the upstream utility system relays (not shown). This compromise in selectivity is not detrimental to system coordination because both of these circuit breakers disconnect the system from the utility should a short circuit occur.

o) *Manual plotting with relay time-current curves.* To place the relay time-current curve on the coordination chart, line up the Relay 1 ordinate at 2389 A and the other multiples of the tap setting will automatically align (i.e., the 2 A relay tap multiple will align at 4778 A and the 4 A relay tap multiple will align at 9556 A). (See Figure 15-20.) The time scale (or horizontal lines) should also be aligned before tracing the relay time-current curve. (Because transparencies may not align throughout the ordinate, use a convenient horizontal time line near the most critical coordination point, such as the 0.1 s line.) Selecting the appropriate time-dial setting is the next step, and a time dial of 20 provides a coordination interval of 0.3 s to 0.4 s.

p) *Coordination with computer software.* The use of a computer software coordination program makes the coordination of a system much easier than manual plotting. Most programs have databases that include many of the protection and damage curves or points and have many manufacturers' protective device characteristic curves. The user should verify that the preloaded overcurrent device databases are accurate. The program should list the publication number and date of issue of the overcurrent device curve data. The end user should also make certain the various settings used (e.g., protection points and curves, coordination intervals) are correct for their application. The various time-current curves in the database should also be checked for accuracy with the actual time-current curves from the manufacturer. This verification ensures that proper coordination and protection are achieved.

q) *Achieving proper selectivity between time-overcurrent relays.* The characteristic curves are not extended past the maximum short-circuit current shown because the devices should never have to operate above these values. In this example all the relay settings and circuit breaker settings have adequate coordination margins. If a relay

Copyright © 2001 IEEE. All rights reserved.

--`,,`-`-`,,`,,`,`,,`---

Copyright The Institute of Electrical and Electronics Engineers, Inc.
Provided by IHS under license with IEEE
No reproduction or networking permitted without license from IHS
Not for Resale

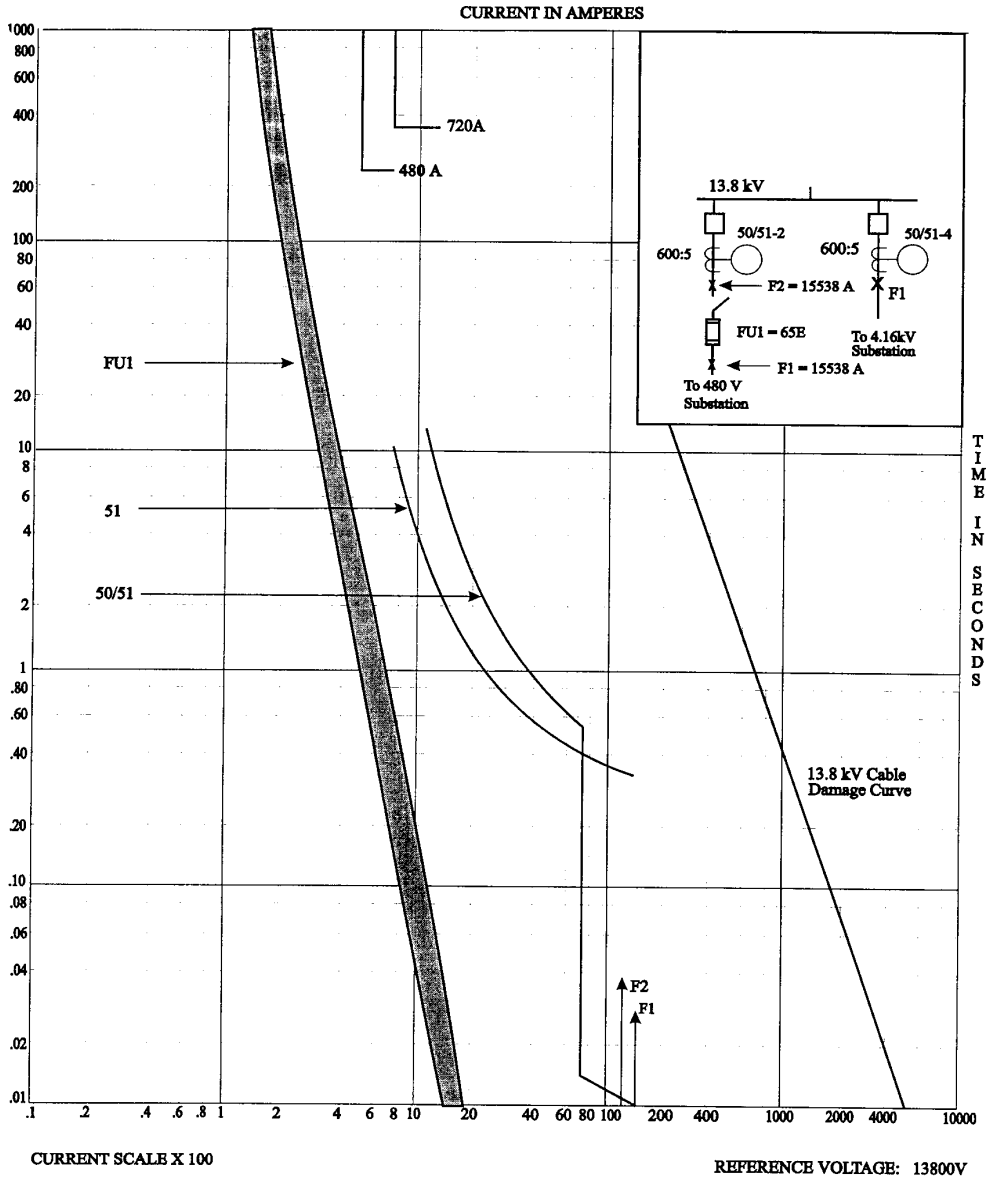

Figure 15-21—13.8 kV feeder relay coordination plot

Copyright © 2001 IEEE. All rights reserved.

Copyright The Institute of Electrical and Electronics Engineers, Inc.
Provided by IHS under license with IEEE
No reproduction or networking permitted without license from IHS
Not for Resale

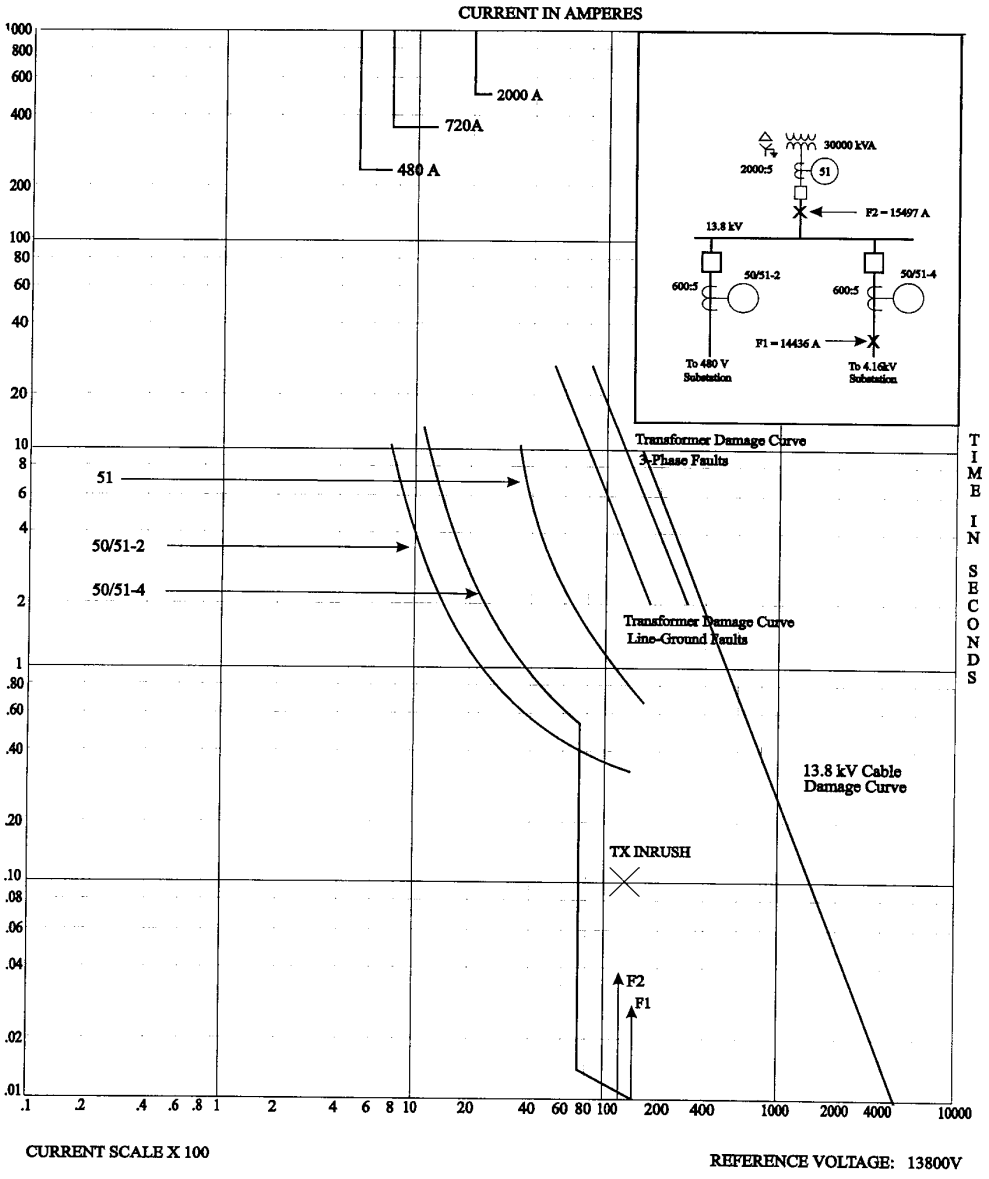

Figure 15-22—30 000 kVA transformer secondary main coordination plot

Copyright © 2001 IEEE. All rights reserved.

Copyright The Institute of Electrical and Electronics Engineers, Inc.
Provided by IHS under license with IEEE
No reproduction or networking permitted without license from IHS
Not for Resale

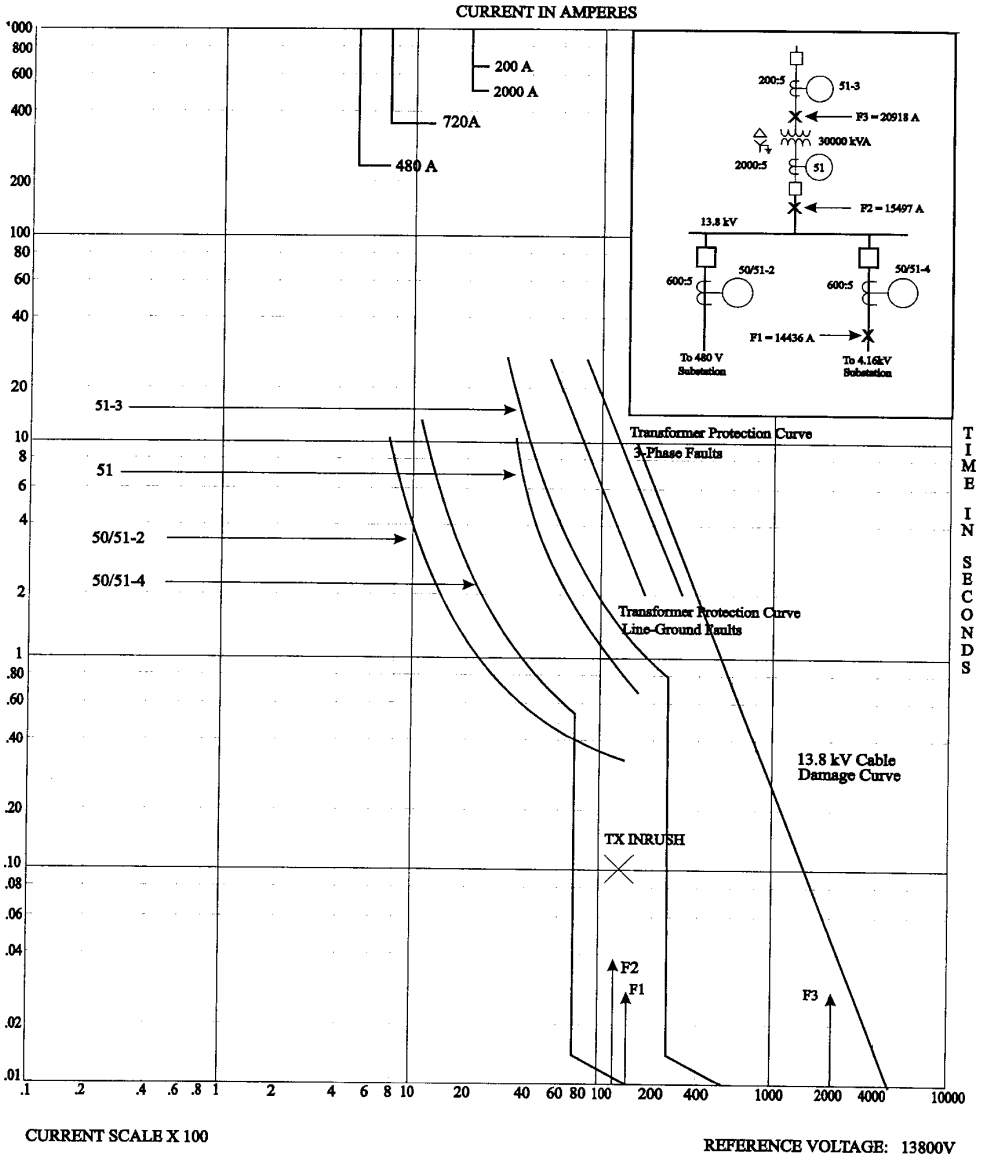

Figure 15-23—30 000 kVA transformer primary relay coordination plot

Copyright © 2001 IEEE. All rights reserved.

Copyright The Institute of Electrical and Electronics Engineers, Inc.
Provided by IHS under license with IEEE
No reproduction or networking permitted without license from IHS
Not for Resale

cannot produce a coordinated tripping curve, then alternatives, such as the following, should be tried:

1) Select a different tap. (This change would shift the curve to the right or left.)
2) Adjust the relay minimum pickup setting between taps (if available) or adjust time-dial settings between calibration marking, or do both. Calibrating the relay can verify the more refined settings often required.
3) Select a different relay characteristic (e.g., inverse, extremely inverse). The extremely inverse relays also coordinate better with most fuse curves.
4) Use a different CT ratio or auxiliary CT. (Many transformer bushing CTs are multiratio.)
5) Change devices or settings of adjacent devices.

r) *The art of compromise*. Normally, selective coordination starts with the lowest voltage and works up to the highest voltage level. All the lower voltage or primary protective device characteristics should be below and to the left of the backup protective device curve. If the lower voltage device or primary noncurrent protective device curves cannot be made to fit under the backup device curve (due to, for example, same voltage or higher voltage), an attempt should be made either to raise the backup device or to compromise the coordination. When selectivity must be compromised, the sacrifice should be made at the location in the system with the least economic consequences. This location varies from system to system. Likely candidates include

1) Sacrificing coordination between a transformer's primary protection and its secondary overcurrent protective devices. Loss of selectivity here is usually not detrimental to system security.
2) Sacrificing selectivity between a load protective device and the next upstream protective device (typically, a feeder overcurrent protective device and an MCC main protective device). The economic consequence of loss of selectivity here is usually more acceptable than at locations other than described in this subclause.

When closer spacing between curves is required, advantage can be gained by utilizing an extremely inverse relay as primary protection for a downstream device. The extremely inverse relay should be backed up by a very inverse relay.

15.8 Ground-fault coordination on low-voltage systems

While the merits of the different types of ground-fault protection are debated, two factors are commonly accepted:

— Arcing ground faults are the more destructive type of fault because the arc limits the fault current sensed by phase-overcurrent devices.
— Selectivity can be typically achieved only by including more than one level of ground-fault relays.

The NEC requires only one ground-fault relay at the service equipment set no higher than 1200 A with a maximum time delay for 1 s to ground-fault currents equal to or greater than 3000 A for solidly grounded wye electrical systems of more than 150 V to ground, but not exceeding 600 V phase-to-phase for each service disconnecting means rated 1000 A or more.

Copyright © 2001 IEEE. All rights reserved.

Copyright The Institute of Electrical and Electronics Engineers, Inc.
Provided by IHS under license with IEEE
No reproduction or networking permitted without license from IHS Not for Resale

(In healthcare facilities, two levels of ground-fault protection are required under the same conditions.) No such specifics are defined for service voltages of 1 kV and over.

Several tests have been made to determine the magnitude of the 480 V arcing fault damage. An 1800 kW cycle fault can be considered the minimum magnitude of perceptible fault damage, sufficient to melt 1/20 in^3 of copper. A 10 000 kW cycle fault is the maximum that can be contained within an 11-gauge enclosure under worst-case conditions. Using these as guides, primary and backup ground-fault protection can be coordinated.

Whereas self-sustaining arcing faults are sometimes stated to exist only above a magnitude equal to 38% of the available bolted line-to-ground-fault current, exceptions have been known. However, a criterion for minimum circuit protection should also consider selectivity and damage. In addition, small branch circuits have low *X*/*R* circuit ratio and tend not to be arcing. In Figure 15-24, the ground-fault protection is omitted for all branch circuits for 11 kW motor loads or 30 A feeder circuits because phase protection coordinates with ground-fault protection.

In Figure 15-24, the MCC ground-fault protection used an extremely inverse relay (Device 51G2) and is backed up at the source by a very inverse relay (Device 51G1). For ground faults within the MCC, individual branch circuit phase-overcurrent or ground-fault protection should operate. If these primary protective devices fail, the MCC Device 51G2 would operate to trip the feeder circuit breaker to the MCC. The source Device 51G1 would be the ultimate backup and trip the bus supply circuit breaker.

Other approaches to ground-fault overcurrent coordination are shown on Figure 15-25 and Figure 15-26. These designs utilize the ground-fault protection option that is integral within the LVPCB feeder. For coordination, purchasing separate ground-fault devices is necessary on MCC feeder circuit breakers larger than 100 A and on fusible motor starters with time-delay fuses larger than 60 A.

When applying bolted pressure contact switches or high-pressure contact switches, the fuse may blow in only one phase during a ground fault. This problem is called single-phasing, and it can be injurious to motors because many older motor overload protection devices do not react in time to protect the motor for this condition. In addition, when a single fuse isolates a ground fault, the fault can still be fed from the other phases through the motor windings, even though the current magnitude has been greatly reduced. Thus, the switch should be purchased with the antisingle-phasing option and an electrical shunt trip. At the same time, a ground-fault trip unit can be purchased to trip the switch. Coordination of the ground-fault unit follows the established procedures so that the faulted circuit is isolated from the system by the nearest protective device, and the other parts of the systems are not affected (see Figure 15-27).

15.9 Phase-fault coordination on substation 600 V or less

A multitude of protective device options can be utilized in low-voltage systems. Coordination of three of the most popular options is discussed in this clause.

Copyright © 2001 IEEE. All rights reserved.

Copyright The Institute of Electrical and Electronics Engineers, Inc.
Provided by IHS under license with IEEE
No reproduction or networking permitted without license from IHS
Not for Resale

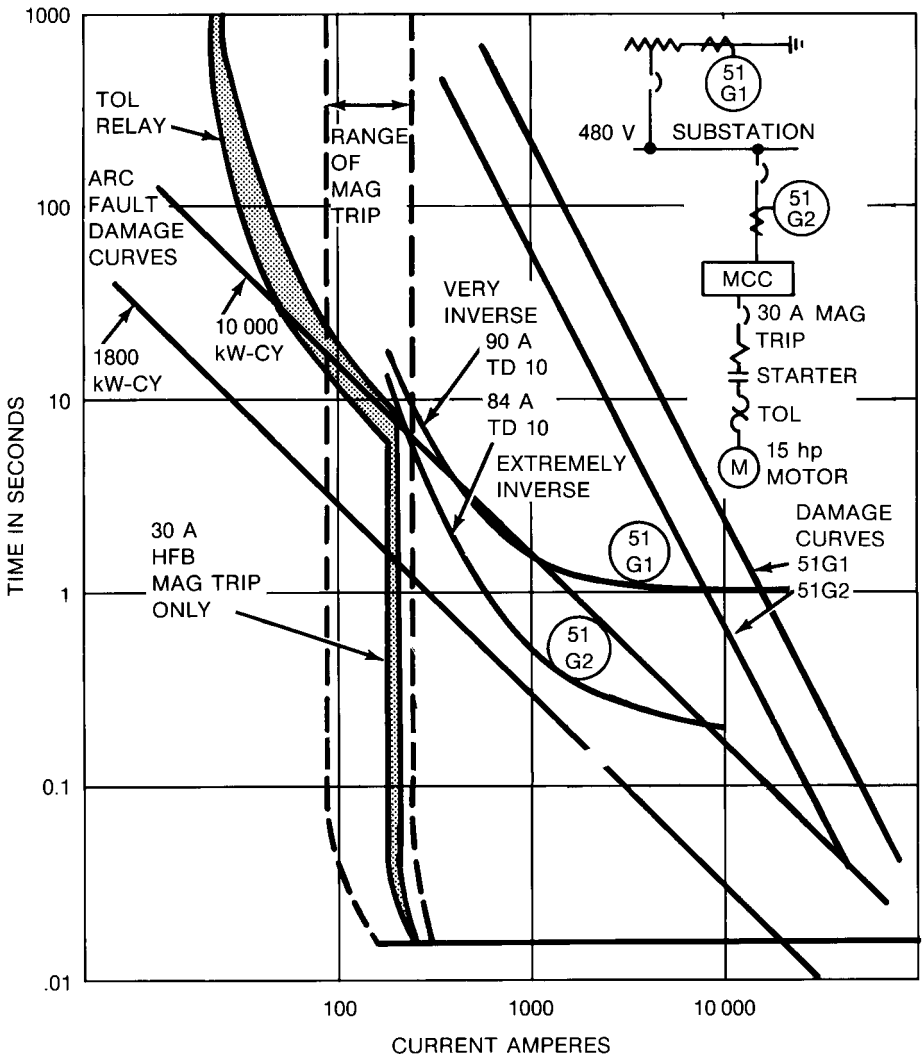

Figure 15-24—Ground-fault protection with 11 kW motor load time-overcurrent relays

Copyright © 2001 IEEE. All rights reserved.

Copyright The Institute of Electrical and Electronics Engineers, Inc.
Provided by IHS under license with IEEE
No reproduction or networking permitted without license from IHS
Not for Resale

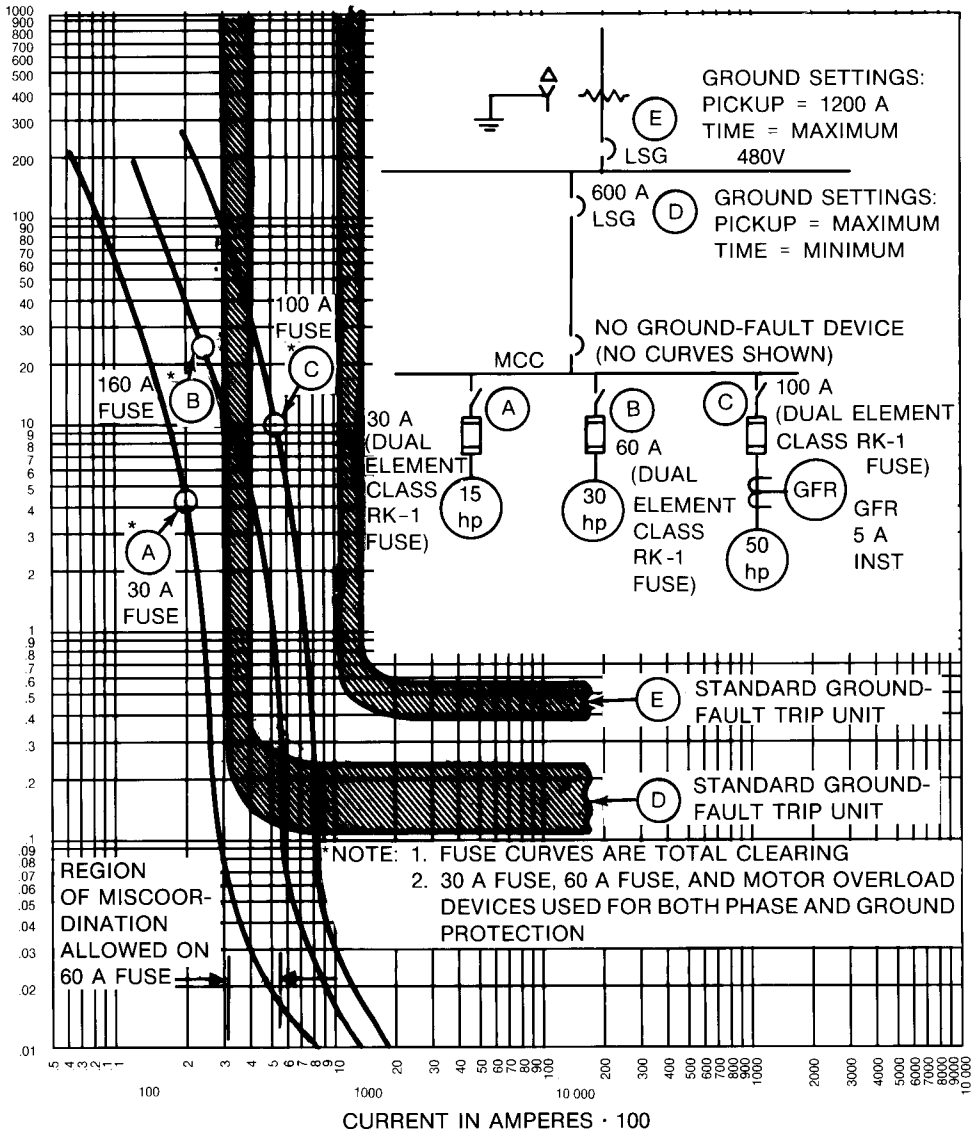

Figure 15-25—Ground-fault TCC curves
Example 1

Copyright © 2001 IEEE. All rights reserved.

Copyright The Institute of Electrical and Electronics Engineers, Inc.
Provided by IHS under license with IEEE
No reproduction or networking permitted without license from IHS
Not for Resale

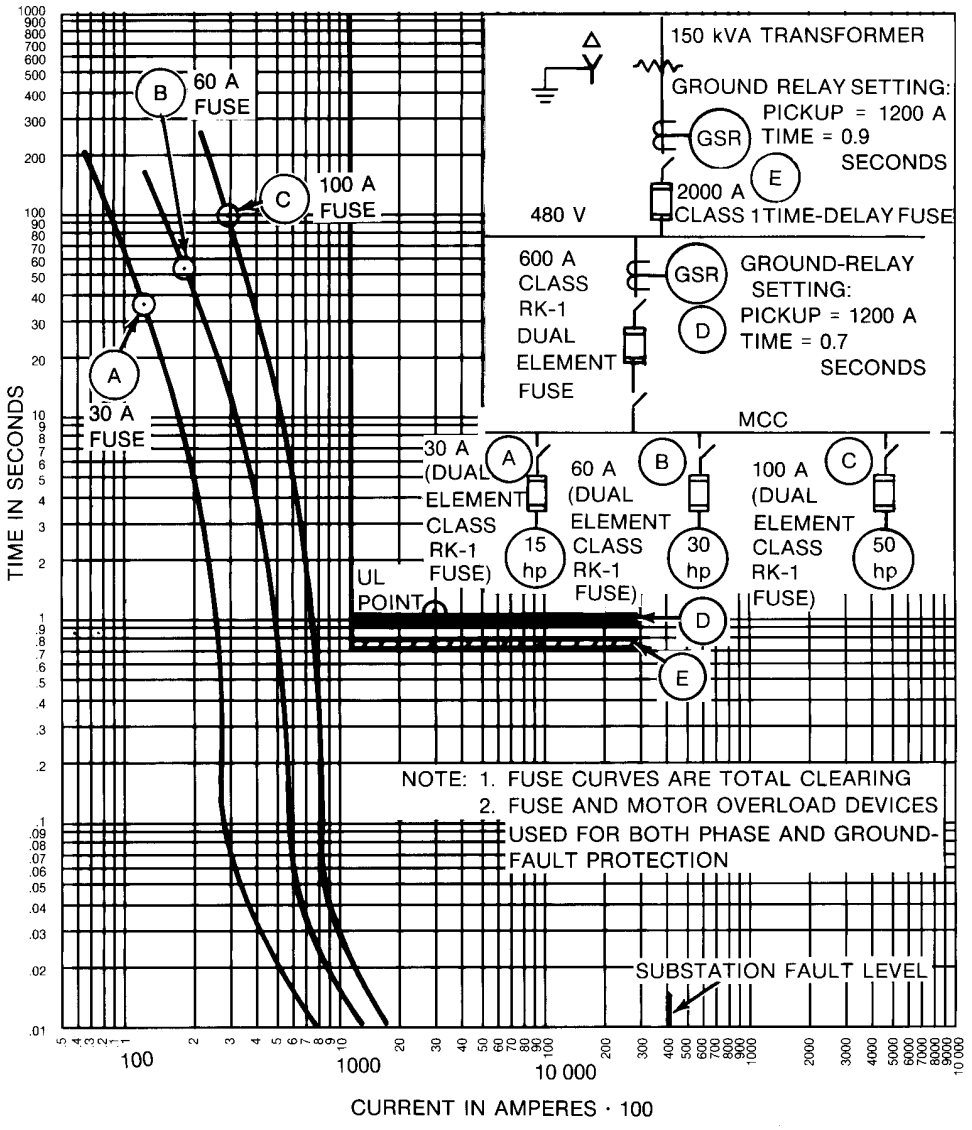

Figure 15-26—Ground-fault TCC curves
Example 2

Copyright © 2001 IEEE. All rights reserved.

Copyright The Institute of Electrical and Electronics Engineers, Inc.
Provided by IHS under license with IEEE
No reproduction or networking permitted without license from IHS
Not for Resale

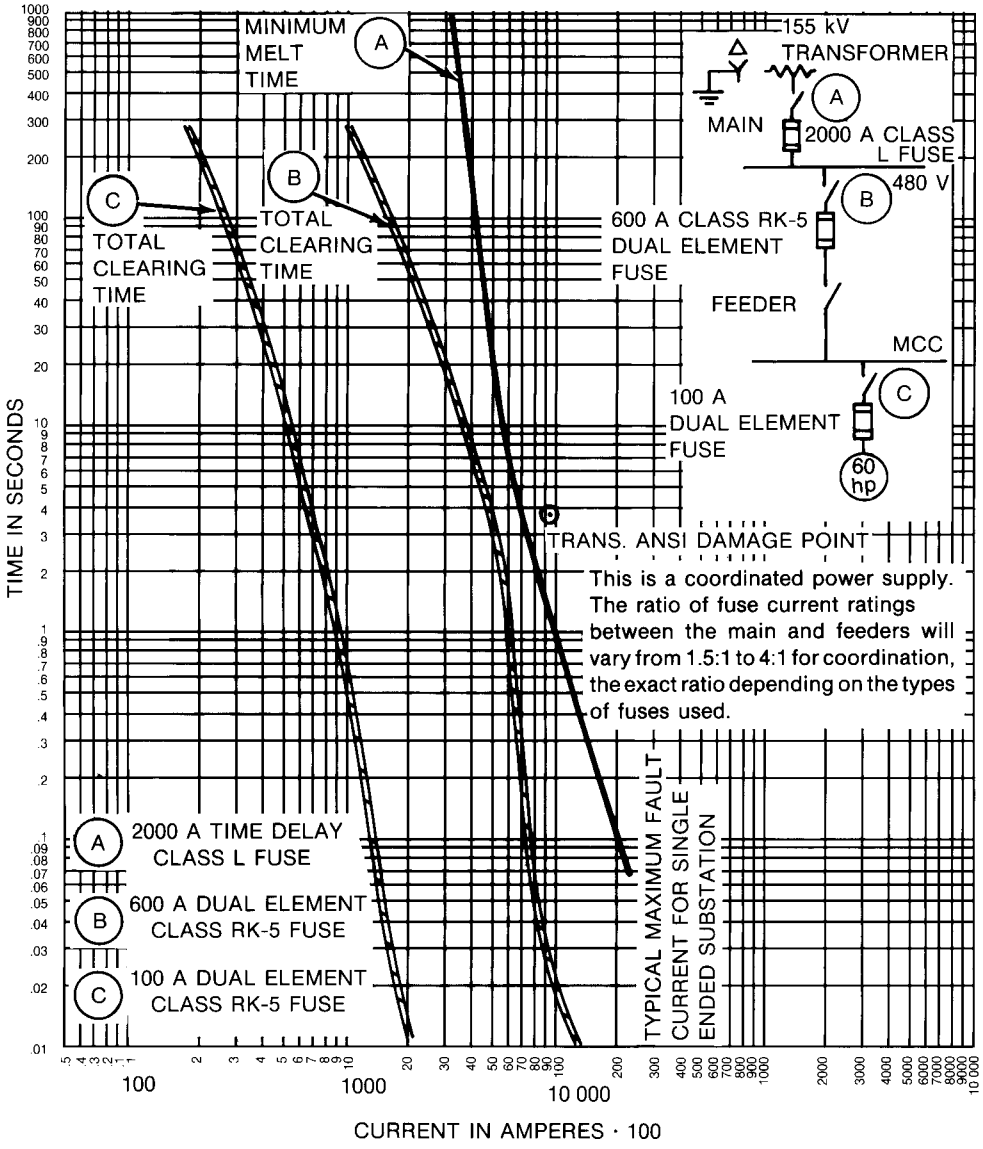

Figure 15-27—Ground-fault TCC curves
Example 3

Copyright © 2001 IEEE. All rights reserved.

Copyright The Institute of Electrical and Electronics Engineers, Inc.
Provided by IHS under license with IEEE
No reproduction or networking permitted without license from IHS
Not for Resale

In the first option, shown in Figure 15-28, fused-bolted pressure contact switches are used in the substation main and substation feeders (although high-pressure contact switches would also apply in this application), and a fused switch is used for an MCC motor load. Current-limiting fuses can be selectively coordinated by maintaining at least a minimum current-rating ratio between the main fuse and feeder fuses and between the feeder fuse and the branch circuit fuses. These current-rating ratios are provided by the fuse manufacturers, and a chart is given in Table 5-1. The size of the fuse is also chosen to protect the individual circuit components: conductors, motors, buses, and transformers.

The second option, shown in Figure 15-29, utilizes circuit breakers with direct-acting trip devices in the substation main and MCC feeder and utilizes a fused switch at the MCC main. To have the best coordination, select circuit breakers with direct-acting trip devices in the substation main and MCC feeder, select a fused switch at the MCC main, and select circuit breakers with the short-time (rather than instantaneous) option on the substation main and feeder. This configuration does not provide the fastest protection because the fault is cleared in the minimum time with instantaneous tripping when compared with the time-delayed tripping obtained from a short-time element. A current-limiting fuse is often used on the MCC main to limit the fault current to a standard, economical short-circuit rating (i.e., 22 000 A) of the MCC bus, circuit breakers, and motor contactors. By looking at Figure 15-29, a lack of coordination is seen between the MCC main fuse and the MCC feeder circuit breaker for fault currents above 8000 A. This condition is a compromise made between protection and coordination.

The third option, shown in Figure 15-30, utilizes circuit breaker protection at each level. Due to high fault-current levels, the MCCBs have current limiters for fault currents above 6000 A. A miscoordination exists between the LVPCB feeder to the MCC and the current limiter on each MCCB. This condition is also a compromise between protection and coordination. Another option is to use current-limiting fuses because they would operate in approximately 0.25 cycle at high fault levels and would coordinate for overcurrents.

Copyright © 2001 IEEE. All rights reserved.

Copyright The Institute of Electrical and Electronics Engineers, Inc.
Provided by IHS under license with IEEE
No reproduction or networking permitted without license from IHS
Not for Resale

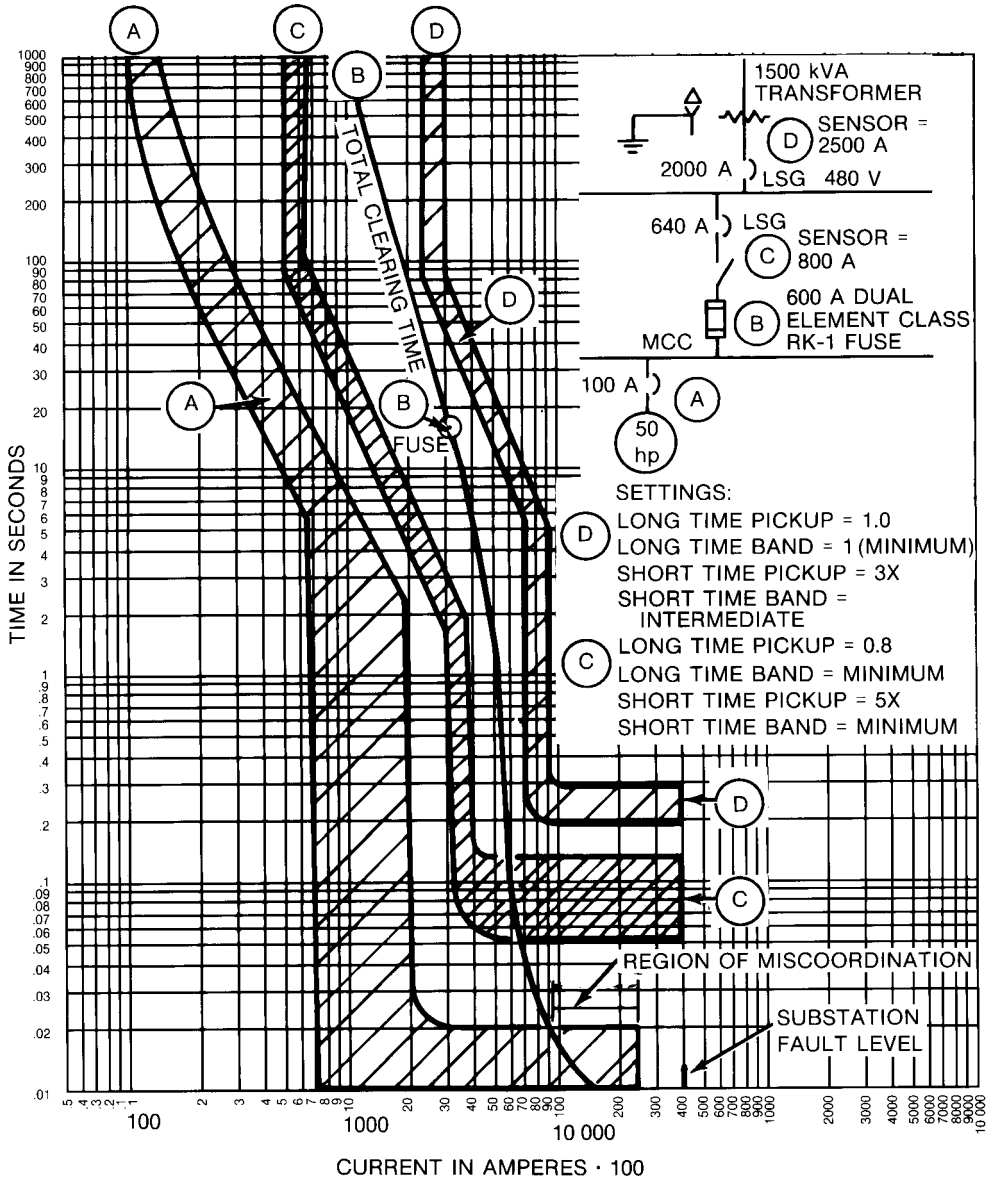

Figure 15-28—Phase-fault TCC curves
Example 1

Copyright © 2001 IEEE. All rights reserved.

--`,,`-`-`,,`,,`,`,,`---

Copyright The Institute of Electrical and Electronics Engineers, Inc.
Provided by IHS under license with IEEE
No reproduction or networking permitted without license from IHS
Not for Resale

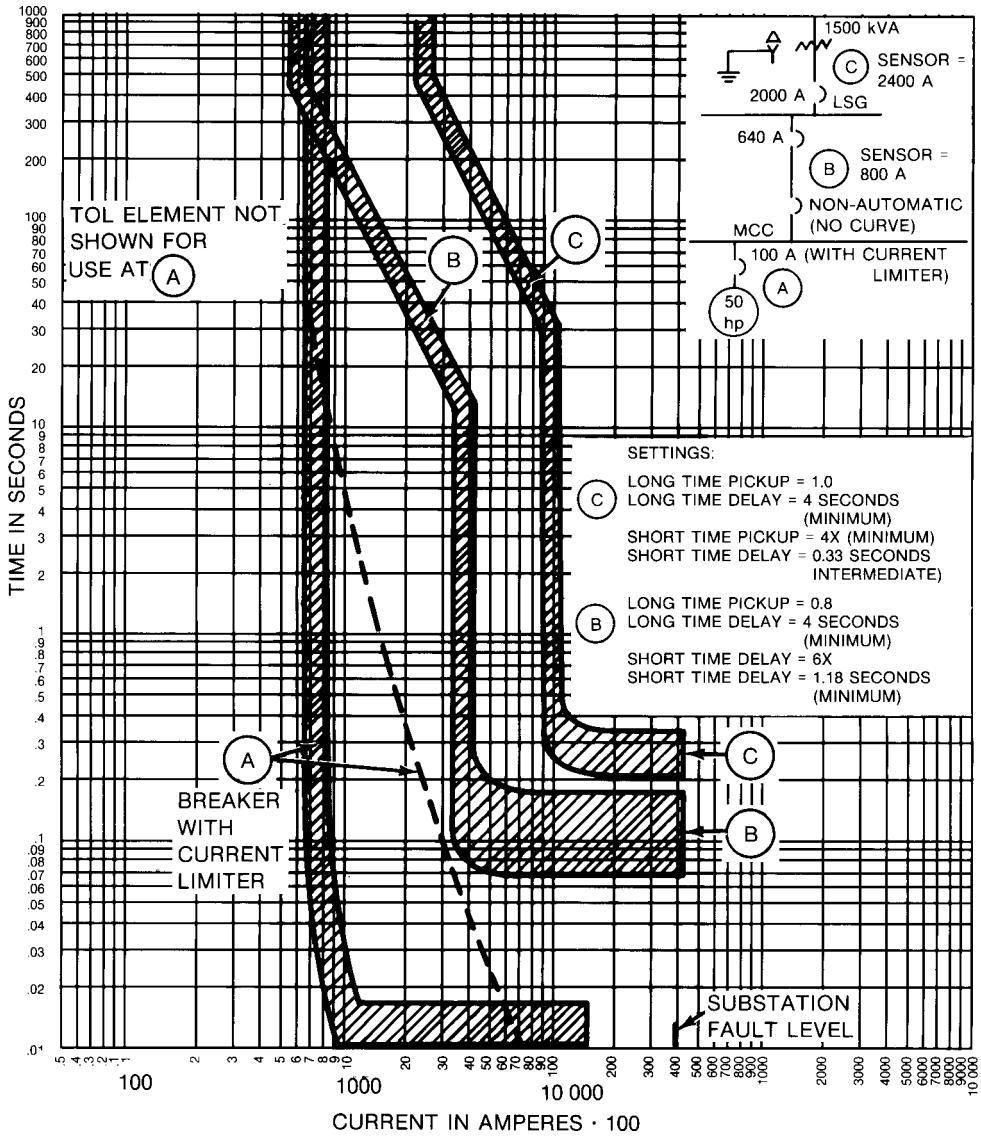

Figure 15-29—Phase-fault TCC curves
Example 2

Copyright © 2001 IEEE. All rights reserved.

Copyright The Institute of Electrical and Electronics Engineers, Inc.
Provided by IHS under license with IEEE
No reproduction or networking permitted without license from IHS
Not for Resale

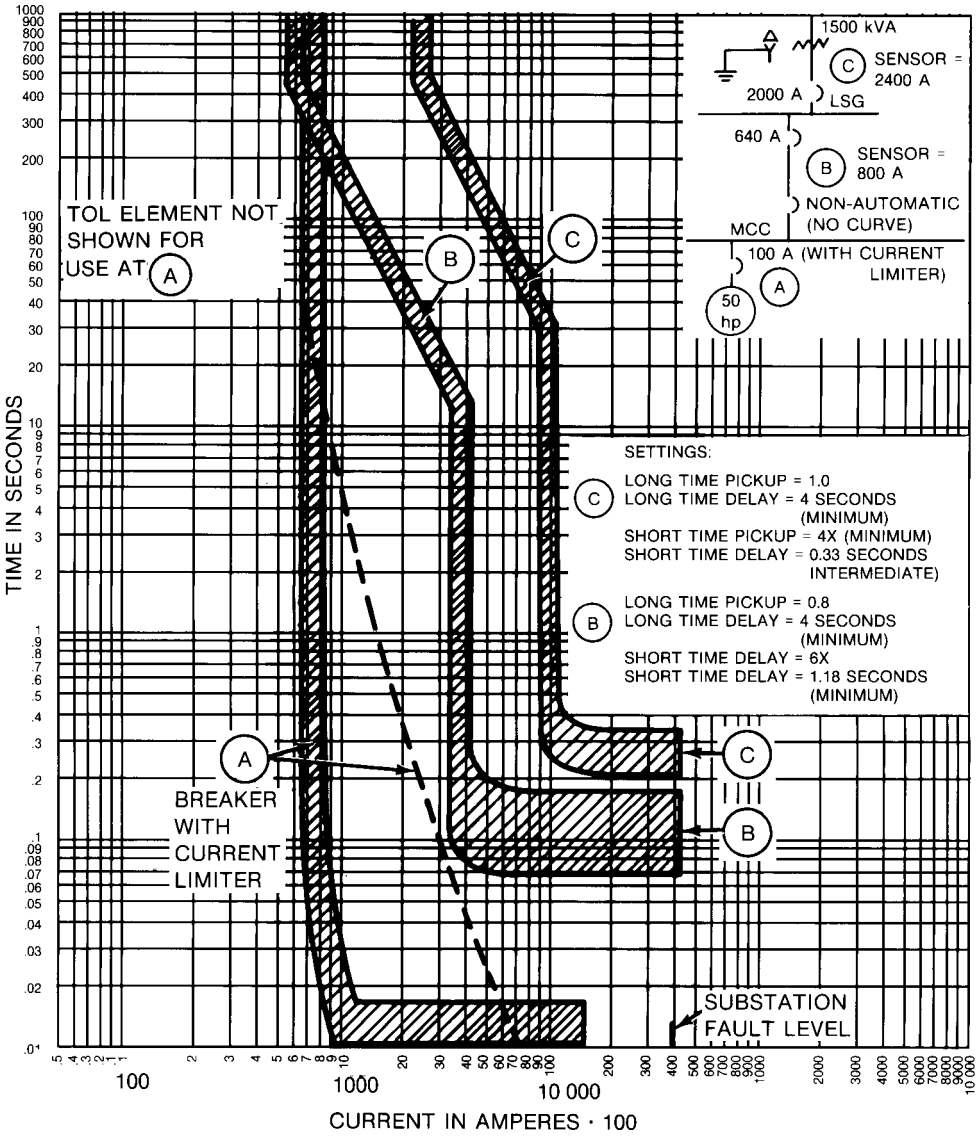

Figure 15-30—Phase TCC curves
Example 3

Copyright © 2001 IEEE. All rights reserved.

Copyright The Institute of Electrical and Electronics Engineers, Inc.
Provided by IHS under license with IEEE
No reproduction or networking permitted without license from IHS
Not for Resale

15.10 References

This recommended practice shall be used in conjunction with the following standards. When the following standards are superseded by an approved revision, the revision shall apply.

IEEE Std 141-1993 (Reaff 1999), IEEE Recommended Practice for Electric Power Distribution for Industrial Plants (*IEEE Red Book*).[3]

IEEE Std C57.12.00-2000, IEEE Standard General Requirements for Liquid-Immersed Distribution, Power, and Regulating Transformers.

IEEE Std C57.12.01-1998, IEEE Standard General Requirements for Dry-Type Distribution and Power Transformers Including Those with Solid Cast and/or Resin Encapsulated Windings.

IEEE Std C57.91-1995, IEEE Guide for Loading Mineral-Oil-Immersed Transformers.

IEEE Std C57.109-1993, IEEE Guide for Liquid-Immersed Transformer Through-Fault-Current Duration.

NFPA 70-1999, National Electrical Code® (NEC®).[4]

15.11 Bibliography

[B1] Beeman, D. L., ed., *Industrial Power Systems Handbook*. New York: McGraw-Hill, 1955.

[B2] Blackburn, J. L., *Protective Relaying, Principles and Applications*, 2nd ed. New York: Marcel Dekker, Inc., 1998.

[B3] Bradfield, H. L., and Heath, D. W., "Short-Circuit Protection of Energy Efficient Motors," *IEEE Industry Applications Magazine,* vol. 3, no. 1, pp. 41–44, Jan./Feb. 1997.

[B4] Burke, R. R., and Finley, W. R., "Trouble Shooting Motor Problems," IEEE PCIC Conference Record, pp. 303–316, 1993.

[B5] Cardinal, Paul G., "Automated Coordination Programs Do Not Make Correct Results Automatic," *IEEE Transactions on Industry Applications*, pp. 97–102, June 1996.

[3]IEEE publications are available from the Institute of Electrical and Electronics Engineers, 445 Hoes Lane, P.O. Box 1331, Piscataway, NJ 08855-1331, USA (http://standards.ieee.org/).

[4]The NEC is published by the National Fire Protection Association, Batterymarch Park, Quincy, MA 02269, USA (http://www.nfpa.org/). Copies are also available from the Institute of Electrical and Electronics Engineers, 445 Hoes Lane, P.O. Box 1331, Piscataway, NJ 08855-1331, USA (http://standards.ieee.org/).

 Copyright © 2001 IEEE. All rights reserved.

--`,,`-`-`,,`,,`,`,,`---

Copyright The Institute of Electrical and Electronics Engineers, Inc.
Provided by IHS under license with IEEE
No reproduction or networking permitted without license from IHS Not for Resale

[B6] Gregory, G., and Padden, L. K. (a working group report), "Application Guidelines For Instantaneous Trip Circuit Breakers in Combination Motor Starters," Conference Record, IEEE IAS Annual Meeting, 1997.

[B7] IEEE Std 241-1990 (Reaff 1997), IEEE Recommended Practice for Electric Power Systems in Commercial Buildings *(IEEE Gray Book*).

[B8] IEEE Std 346-1996, IEEE Standard Definitions in Power Operations Terminology Including Terms for Reporting and Analyzing Outages of Electrical Transmission and Distribution Facilities and Interruptions to Customer Service.

[B9] IEEE Std C37.91-1985, IEEE Guide for Protective Relay Applications to Power Transformers.

[B10] IEEE Std C37.95-1973 (Reaff 1994), IEEE Guide for Protective Relaying of Utility-Consumer Interconnections.

[B11] IEEE Std C37.96-1988, IEEE Guide for AC Motor Protection.

[B12] Nailen, R. L., "Motor Inrush Current: What Does It Really Mean?" *Electrical Apparatus Magazine*, pp. 56–60, June 1986.

[B13] Padden, L. K., and Pillai, P., "A Flow Chart Methodology For Performing Low-Voltage Three-Phase Motor Coordination Studies," IEEE PCIC Conference Record, pp. 11–23, 1997.

[B14] Reichenstein, H. W., and Castenschiold, R., "Coordinating Overcurrent Protective Devices with Automatic Transfer Switches in Commercial and Industrial Power Systems," *IEEE Transactions on Industry Applications,* vol. IA-11, pp. 620–635, Nov./Dec. 1975.

[B15] St. Pierre, C. R., and Wolny, T. E., "Standardization of Benchmarks for Protective Device Time-Current Curves," *IEEE Transactions on Industry Applications,* vol. IA-22, no. 4, pp. 623–632, Jul./Aug. 1986.

Copyright © 2001 IEEE. All rights reserved.

Copyright The Institute of Electrical and Electronics Engineers, Inc.
Provided by IHS under license with IEEE
No reproduction or networking permitted without license from IHS
Not for Resale

Copyright The Institute of Electrical and Electronics Engineers, Inc.
Provided by IHS under license with IEEE
No reproduction or networking permitted without license from IHS
Not for Resale

Chapter 16
Maintenance, testing, and calibration

16.1 Overview

16.1.1 Scope

This chapter sets out recommendations and procedures for the maintenance of electrical switchgear having rated voltages not greater than 34.5 kV. At voltages above this level, the design of equipment, system operations, and consequently maintenance requirements and practices may differ significantly. However, the principles formulated in this recommended practice, especially the principles regarding the safety of personnel, are for the most part applicable at the higher voltages.

This recommended practice does not apply to the maintenance of electrical switchgear

- Of sealed construction intended only to be repaired or adjusted by the manufacturer, or
- Used in explosive atmospheres.

16.1.2 Rationale

IEEE Std 493-1997[1] reports that the Reliability Subcommittee of the IEEE Industrial and Commercial Power Systems Committee conducted a survey on the reliability of electrical equipment in industrial plants. The survey found that maintenance quality had a significant effect on the percentage of all failures blamed on inadequate maintenance. Of the 1469 failures reported from all causes, inadequate maintenance was blamed for 240 (or 16.4%) of all the failures. The percentage of failures blamed on inadequate maintenance shows a close correlation with the "failure, months since maintained" answer choice.

16.1.3 Objective

This chapter provides a record of the matters that technical knowledge and experience have shown to be important in keeping electrical switchgear and its associated apparatus in an acceptable condition. Attention to the precautions to be observed in order to secure the safety of personnel while maintenance is in progress are also covered. These precautions include

- Safety rules
- Safety features of equipment
- Measures to minimize hazards to plant and to ensure continuity of service
- The use of electrical testing to detect insulation weakness or the deteriorating condition of insulation

[1]Information on references can be found in 16.16.

Copyright © 2001 IEEE. All rights reserved.

Copyright The Institute of Electrical and Electronics Engineers, Inc.
Provided by IHS under license with IEEE
No reproduction or networking permitted without license from IHS
Not for Resale

16.1.4 Reserved

16.1.5 Reserved

16.2 Definitions

For the purpose of this document, the following definitions apply.

16.2.1 acceptable conditions: The conditions in which an item is able to perform its required function and/or meet the relevant specification.

16.2.2 electrical station: A building, rooms, or designated space that houses the electrical equipment in an installation.

16.2.3 electrical equipment: A general term for the equipment (e.g., materials, fittings, devices, appliances, fixtures, apparatus, machines) used as a part of, or in connection with, an electric installation.

16.2.4 emergency action: Action that should be taken immediately to avoid serious consequence.

16.2.5 examination: An inspection with the addition of partial dismantling as required, supplemented by means such as measurements and nondestructive tests or high-potential tests, in order to arrive at a reliable conclusion about the condition of an item.

NOTE—An examination should be followed by an operation check.

16.2.6 failure (or breakdown): The termination of the ability of an item to perform its required function.

NOTE—Failure can be gradual, sudden, partial, or complete.

16.2.7 inspection: Maintenance action comprising a careful scrutiny of an item carried out without significant dismantling and using all the senses as required to detect anything that causes the item to fail to meet an acceptable condition.

NOTE—An inspection may be followed by an operation check or an examination.

16.2.8 item: Any part of equipment, including a composite, which can be individually considered.

16.2.9 maintenance: A combination of any actions carried out to retain an item in, or restore it to, an acceptable condition.

16.2.9.1 electrical preventive maintenance: A system of planned inspection, testing, cleaning, drying, monitoring, adjusting, corrective modification, and minor repair of electric equipment to minimize or forestall future equipment operating problems or failures. Depend-

Copyright © 2001 IEEE. All rights reserved.

--`,,`-`-`,,`,,`,`,,`---

Copyright The Institute of Electrical and Electronics Engineers, Inc.
Provided by IHS under license with IEEE
No reproduction or networking permitted without license from IHS Not for Resale

ing upon equipment type, this maintenance may require exercising or proof testing (see IEEE Std 493-1997).

16.2.9.2 nonroutine maintenance: Unplanned maintenance that is not the result of a breakdown.

16.2.9.3 post-fault maintenance: Maintenance necessary on switchgear after a specified number of fault clearance operations.

16.2.9.4 preventive maintenance: Maintenance carried out with the objective of preventing breakdown. It may include routine or nonroutine maintenance.

16.2.9.5 repair or corrective maintenance: Maintenance necessary to restore to an acceptable condition an item that has ceased to meet an acceptable condition.

16.2.9.6 routine maintenance: Maintenance organized and carried out in accordance with a predetermined policy or plan to prevent breakdown or reduce the likelihood that an item will fail to meet an acceptable condition.

16.2.10 operational check: An action carried out to determine whether an item functions correctly.

16.2.11 test: A measurement carried out to determine the condition of an item.

16.2.11.1 diagnostic testing: A technique involving the establishing of comparative data for monitoring and checking the condition of equipment.

16.2.12 overhaul: Maintenance of an item including examination and replacement or rebuilding as required.

16.2.12.1 major overhaul: An overhaul that includes major dismantling and/or replacement of items to complete the maintenance.

16.2.12.2 minor overhaul or servicing: An overhaul that is limited to lubrication and/or replacement of consumables.

16.3 Safety of personnel

16.3.1 General

All persons engaged in the maintenance of electrical switchgear and associated equipment have a responsibility to

— Perform their work in accordance with the applicable statutory requirements [e.g., Occupational Safety and Health Administration (OSHA) rules] and industry standards [including the National Electrical Safety Code® (NESC®) (Accredited

Copyright © 2001 IEEE. All rights reserved.

Copyright The Institute of Electrical and Electronics Engineers, Inc.
Provided by IHS under license with IEEE
No reproduction or networking permitted without license from IHS
Not for Resale

Standards Committee C2-2002) and NFPA 70E-1995] due to the potential dangers associated with electrical equipment and

— Take appropriate measures to safeguard personnel.

16.3.2 Responsibility

16.3.2.1 Reserved

16.3.2.2 Authorized person

Anyone to whom responsibility for electrical safety is delegated is an authorized person.

16.3.3 First aid

Verify that a notice giving instructions for the treatment of persons suffering from electric shock is affixed in a prominent position in all locations where maintenance is carried out. Verify that first aid equipment is available for the treatment of personnel (see 29 CFR 1926).

Verify that the address and telephone number of the nearest ambulance, first aid center, or hospital are prominently displayed on the premises. Verify that the telephone to be used for emergency calls will be in service during the maintenance work.

All electrical maintenance personnel should be trained in both the rescue of people and the application of cardiopulmonary resuscitation (CPR) techniques (see Dec. 1986 *NIOSH Alert!*).

Determine whether the staff is trained in the rescue of people from live high-voltage areas.

16.3.4 Access

Verify that access to electrical stations is restricted and, where necessary, suitable barriers are installed to prevent access to enclosures, compartments, cubicles, or cells containing exposed live conductors.

16.3.5 Safety rules

16.3.5.1 General

Safety in the control, operation, and maintenance of switchgear is best achieved by the observance of a simple code of safety rules. A set of safety rules should be prepared that are appropriate to the premises electrical installation and cover the operation of and work to be performed on the equipment (see ISO/IEC 51, IEEE Std 510-1985, IEEE Std 625-2001, and OSHA 3120).

Copyright © 2001 IEEE. All rights reserved.

--`,,`-`-`,,`,,`,`,,`---

Copyright The Institute of Electrical and Electronics Engineers, Inc.
Provided by IHS under license with IEEE
No reproduction or networking permitted without license from IHS Not for Resale

16.3.5.2 Anticipating dangers

The policy to be followed when drafting safety rules is to attempt to foresee any danger that can or may develop and to institute procedures and methods that inhibit danger as far as practicable.

16.3.5.3 Familiarity with rules

Verify that all persons operating or working on the equipment covered by the rules are thoroughly conversant with the rules and with the relevant statutory requirements and that they comply strictly with these rules and requirements.

16.3.5.4 Utility rules

Verify that, where work is to be switching or where maintenance work on switchgear controlled by a utility is to be performed, the utility's rules and the owner's company rules for initiating and carrying out work on equipment or apparatus are ascertained and followed.

16.3.5.5 High-voltage equipment

Verify that safety rules are drafted to prevent any person from being exposed to danger from live conductors. Allowing only qualified personnel access to high-voltage equipment to accomplish their work is a good practice.

16.4 Safety provisions for maintenance operations

16.4.1 General

The performance and safe operation of electrical equipment are dependent on the initial design of the electrical station and the layout, installation, and environment of the equipment. Therefore, these aspects should be considered at the design and installation stages.

16.4.2 Avoidance of moisture and dust

The entry of moisture and dust into electrical equipment and its associated control equipment can cause a failure or a fault. Verify that during all maintenance operations an inspection is performed to determine evidence of dampness or condensation in all electrical equipment. If this condition is observed, remedial action should be taken (e.g., by the improvement of ventilation, the provision of heaters).

Where feasible, the entry of dust should be prevented.

16.4.3 Containment of faults

The physical separation of switchboards and switchgear into sections and the provision of fire-resistant barriers can assist in the containment and limitation of possible damage. The

Copyright © 2001 IEEE. All rights reserved.

Copyright The Institute of Electrical and Electronics Engineers, Inc.
Provided by IHS under license with IEEE
No reproduction or networking permitted without license from IHS
Not for Resale

inspection of an electrical station should include inspection of any seals provided on cable access points and any other provision, such as fire-resisting barriers, made to prevent the passage of flame, smoke, gas, or liquid.

Where measures (e.g., curbs, raised door thresholds, containment or catchment areas) have been taken in an electrical station to prevent the spreading of an oil spillage, verify that these measures are inspected to see whether they are effective. Verify that any gravel or pebble bed used is in a porous condition (see IEEE Std 980-1994).

16.4.4 Fire extinguishing equipment

16.4.4.1 Availability of equipment and training of personnel

Where a fire risk exists, verify that all personnel performing maintenance on switchgear have available some means of fighting fire (e.g., extinguishers permanently in the premises, portable extinguishers provided during the period of the work) and that training has been received in the use of such extinguishers.

16.4.4.2 Suitability for intended purpose

Verify that fire extinguishing equipment provided for use on electrical equipment is compatible with the electrical equipment and not dangerous to use in the situation (see IEEE Std 979-1994).

16.4.4.3 Inspection and labeling

Verify that fire extinguishing equipment has been inspected regularly, in accordance with the manufacturer's instructions and fire laws, and that the equipment is labeled with the type of extinguishing agent and with instructions for use.

16.4.4.4 Renewal or recharge after use

Verify that the fire extinguishing equipment is renewed or recharged immediately after use.

16.4.4.5 Automatic fire extinguishing installations

Where automatic fire extinguishing installations are provided, verify that this provision is prominently indicated by a notice outside the electrical station and that the notice also shows the procedure to cancel the automatic feature. Verify that the procedures have been developed to safeguard personnel against danger when entering rooms fitted with automatic fire extinguishing equipment or when in compartments in which automatic fire extinguishing equipment has operated. Verify that these procedures are prominently indicated by notices inside and outside the electrical station. In areas equipped with automatic carbon dioxide release, verify that confined space and other applicable procedures are developed and followed.

Copyright © 2001 IEEE. All rights reserved.

--`,,`-`-`,,`,,`,`,,`---

Copyright The Institute of Electrical and Electronics Engineers, Inc.
Provided by IHS under license with IEEE
No reproduction or networking permitted without license from IHS Not for Resale

16.4.5 Emergency exits

Verify that all emergency exits are properly secured to prevent the entrance of an unauthorized person from outside while at all times allowing free escape from inside. Verify that all emergency exits are inspected and kept clear during inspection of the electrical station.

16.4.6 Lighting

Verify that adequate lighting (fixed or portable, or a combination of both) is provided to ensure safe access and working conditions for all personnel in electrical stations (see OSHA 1926.56).

16.4.7 Access

Verify that the electrical stations are designed to prevent access and interference by unauthorized persons. Verify that inspections are made to maintained this security. Verify that doors and other means of entry are kept secure by locking or other suitable methods.

To avoid danger, verify that working space and access ways provided to apparatus and equipment that is to be worked upon or operated are properly maintained and kept free of obstructions [see the National Electrical Code® (NEC®) (NFPA 70-2002) and NFPA 70E-2000].

Verify that provisions are maintained for access to allow work on equipment as recommended by the manufacturer. Verify that work platforms are not erected around the equipment until after the equipment has been de-energized, tested, grounded, locked out, and tagged out. The leaning of ladders against porcelain insulation is not generally recommended (see Jan. 1989 *NIOSH Alert!,* OSHA 1926.450, and OSHA 1926.451).

16.4.8 Grounding equipment

16.4.8.1 Availability of grounding equipment

Grounding is an essential safeguard for personnel carrying out work on electrical equipment. Verify that suitable grounding equipment is available. Such equipment includes special grounding contacts provided in the switchgear, equipment for attachment to the switchgear, or portable equipment (see IEEE Std 510-1983, IEEE Std 625-2001, and IEEE Std 1048-1990).

16.4.8.2 Suitability of temporary grounding equipment

Verify that temporary grounding equipment of an approved type and with adequate current-carrying capacity to suit the fault level of the installation is available (see ASTM F855-90).

Copyright © 2001 IEEE. All rights reserved.

Copyright The Institute of Electrical and Electronics Engineers, Inc.
Provided by IHS under license with IEEE
No reproduction or networking permitted without license from IHS
Not for Resale

16.4.8.3 Inspection

A good practice is to inspect grounding equipment, particularly connections and insulation, before each use. Verify that grounding tools insulated for the purpose are subjected to high-voltage testing at regular intervals (see IEEE Std 978-1984).

16.4.8.4 Permanently stored grounding equipment

Verify that grounding equipment is permanently stored in an installation in storage facilities particularly made for that purpose and included in the inspection of the installation.

16.4.9 Ground mats

Verify that the integrity of the grounding connection installed in the field between a ground mat and switchgear operating handles is regularly inspected.

16.4.10 Insulating mats, stands, screens, and other similar equipment

Verify that permanent and portable insulating mats, stands, or screens are inspected and maintained in good condition. Verify that insulated gloves of adequate capacity and of sound quality are available to personnel when required. Verify that insulated gloves are tested at regular intervals (see *ASTM Standards for Electrical Protective Equipment for Workers*).

16.4.11 Verification that conductors are not alive

Prior to the application of any grounding leads, verify that equipment required to be grounded is proved dead. Verify that any indicating device used for this purpose is tested in the approved manner both immediately before and immediately after use (see Dec. 1987 *NIOSH Alert!*). Recheck the circuit using a second independent voltage indicating device, if available.

16.4.12 Protection against induction (i.e., electric and magnetic fields)

When work is being carried out adjacent to extra high-voltage stations, special precautions may be necessary to protect personnel against induction (i.e., electric and magnetic fields).

16.4.13 Detection of hazardous gases

Where ingress of hazardous gases into an area containing electrical installations may occur, verify that suitable indicators are provided to indicate the presence of such gas (see Jan. 1986 *NIOSH Alert!*).

16.4.14 Danger from stored energy

To avoid hazards when work is to be performed where stored energy is available due to compressed air, other gases, or mechanical means (e.g., spring-latched mechanisms), special precautions are advisable (see OSHA 3120 and ANSI Z244.1-1982).

Copyright © 2001 IEEE. All rights reserved.

Copyright The Institute of Electrical and Electronics Engineers, Inc.
Provided by IHS under license with IEEE
No reproduction or networking permitted without license from IHS Not for Resale

16.4.15 Portable electric tools

Where hand lamps and portable tools are used, verify that they are of double-insulated construction (see NFPA 70E-1995, OSHA 1910.304, OSHA 1926.300, and OSHA 1926.302).

Where practicable, the following types of hand lamps and portable tools are preferred: operated from extra low voltages, supplied from a circuit equipped with a ground-fault circuit-interrupter, or of double-insulated construction.

Verify that trailing cables are of minimal length, of adequate construction, and properly protected (e.g., by ground-fault circuit-interrupting circuit breakers); and verify that cable connectors are of suitable design for the environment in which they are operating.

Verify that all portable equipment is regularly inspected and tested; has attached a label showing the due date for the next test; and, where feasible, is inspected before each use.

16.4.16 Instructions, notices, and labels

16.4.16.1 Availability and display

Verify that adequate instructions, diagrams, and data are available to persons operating equipment, in charge of work, or working in electrical stations to ensure proper and safe control of equipment and isolation for working, e.g., lockout or tagout.

Verify that notices and labels required by statutory regulations are displayed with any other notices or labels necessary for identification of equipment and its function.

16.4.16.2 Removal and replacement of identification labels

Where more than one unit of switchgear is out of service, verify that particular care is taken to avoid inadvertent removal, replacement, or exchange of labels, which were previously attached to the other switchgear units removed from service.

16.4.16.3 Caution and danger signs

Verify that adequate quantities of caution and danger signs are kept in the electrical station for immediate use with the number of safety locks required for the operation of the equipment (see the NESC, the NEC, NFPA 70B-1994, NFPA 70E-1995, and OSHA 3120).

16.4.16.4 Emergency exits

Verify that emergency exits are clearly labeled as such inside and outside and that the labels are clearly visible even under adverse conditions. The label on the outside of the emergency exit is to prevent obstruction of the door, even temporarily, by others and to advise emergency personnel of access to the facility.

Copyright © 2001 IEEE. All rights reserved.

Copyright The Institute of Electrical and Electronics Engineers, Inc.
Provided by IHS under license with IEEE
No reproduction or networking permitted without license from IHS
Not for Resale

16.5 Frequency of maintenance operations

16.5.1 General

The interval between maintenance operations may vary greatly depending upon the design of the switchgear, the duty that it is called on to perform, and the environment in which it is situated (see IEEE Std 493-1997, FM Technical Advisory Bulletin 5-20/14-22, FAA Advisory Circular 150/5340-26, REA Bulletin 65-1, REA Bulletin 163-2, and REA Bulletin 165-11).

16.5.2 Planning the frequency of maintenance operations

16.5.2.1 Manufacturer's instructions

When the frequencies of maintenance operations for particular items of a plant are being planned, the manufacturer's instructions should be consulted (see NFPA 70B-1994).

16.5.2.2 Newly commissioned equipment

a) *Examination prior to commissioning and within 12 mo of commissioning*. Switchgear of all types should be examined prior to commissioning and should be inspected or examined within 12 mo of commissioning. The latter examination should be carried out before the end of the manufacturer's warranty period.

   Particular attention should be given to the tightness of any fixings and fastenings (especially those associated with moving parts and conductor joints), internal and external cleanliness, condition of insulation, recommended clearance, and setting and efficacy of the close and open operations.

   These inspections or examinations can give guidance on the intervals that might be allowed to elapse between future inspections, examinations, and overhaul operations with reference to particular service conditions. When estimating these intervals, the condition of the equipment at the time of the examination should be considered with regard to the following:

   1) External insulation and contamination
   2) Internal insulation
   3) Contacts (i.e., interrupting devices and connections)
   4) Operating mechanisms and their lubrication
   5) Weather seals and gaskets
   6) Protective finishes and signs of corrosion

b) *Contacts, arc-control devices, and internal insulation*. The condition of contacts and arc-control devices normally depends on the number of operations performed by a circuit breaker and whether such operations are load or fault-current breaking. A log of switching operations should be kept to help determine the condition of these contacts and devices.

   Similar considerations may apply to the condition of the internal insulation. However, in this case, the influence of moisture ingress may be relevant because this factor is generally affected by the length of time in service.

 Copyright © 2001 IEEE. All rights reserved.

Copyright The Institute of Electrical and Electronics Engineers, Inc.
Provided by IHS under license with IEEE
No reproduction or networking permitted without license from IHS Not for Resale

c) *Mechanisms*. The condition of mechanisms is affected by the number of operations, the environmental surroundings, and the period of service.

d) *Basis for the determination of intervals between maintenance operations*. The intervals between maintenance operations may be based on the number of operations performed or on fixed time intervals. The preferred basis is determined by the electrical, mechanical, and environmental duties imposed on the switchgear. In practice, a combination of these criteria may be used based upon service experience.

16.5.2.3 Records

Records of the performed maintenance should be kept. A record of the as-found condition of the equipment can give an effective indication of the required maintenance and of any necessary change in frequency. A review of these records may highlight design or application defects.

16.5.2.4 Routine maintenance

a) *Basis for organization*. Routine maintenance is the program organized on the basis of regular inspections supplemented at more extended intervals with operational checks and examination and with some dismantling as required. The objective of the inspection is to ensure that no damage or distress has been sustained in the course of operations, whereas the examination enables the reconditioning of the contact system, the lubrication and adjustment of mechanisms, and a more detailed inspection and testing of insulation.

b) *Diagnostic testing*. Diagnostic testing determines characteristics such as timing, minimum operating voltage or pressures, contact and insulation resistance. These tests, by comparison with previous similar tests, provide guidance to possible deterioration and may indicate a need to vary maintenance intervals under particular service conditions (see also 16.11).

c) *Switchgear controlling continuously operated plant*. For switchgear controlling continuous processes, coordinating maintenance with the demands of the production program may be necessary.

d) *Different items of a plant at a common location*. In assessing maintenance intervals for different items of electrical equipment at a common location (e.g., indoor and outdoor switchgear of different voltages at one station), the number of site visits may be minimized by arranging for any different intervals of maintenance to be common multiples of the period allocated to the items requiring most frequent attention.

16.5.2.5 Post-fault maintenance

Following fault operation, a good practice is to inspect a circuit breaker at the earliest opportunity. The appropriate industry standards and manufacturers' recommendations should be consulted for the capability of the circuit breaker to function satisfactorily without intermediate maintenance.

Copyright © 2001 IEEE. All rights reserved.

--`,,`-`-`,,`,,`,`,,`---

Copyright The Institute of Electrical and Electronics Engineers, Inc.
Provided by IHS under license with IEEE
No reproduction or networking permitted without license from IHS
Not for Resale

16.5.3 Insulating oil

16.5.3.1 General considerations

The interval between tests and between reconditioning of oil depends on the nature and frequency of operation of the switchgear under normal service conditions and under special considerations when frequent operations take place under low leading or lagging power factor (i.e., capacitive or inductive load) conditions. Test the circuit breaker oil every 6 mo (see NEMA SG 4-2000). Oil sampling procedures should adhere to the manufacturers' procedures. Caution should be observed when sampling equipment that is energized.

16.5.3.2 Environmental conditions

Environmental conditions may have a detrimental effect on insulating oil, and special attention should be given to switchgear operating under adverse environmental conditions.

16.5.3.3 Deterioration and contamination

Deterioration of oil in switchgear depends mainly on the duty of the equipment, the efficiency of its arc control device, and the effects of the environment. The optimum period between tests and reconditioning is usually based on experience and/or consultation with the switchgear manufacturer.

The contamination of insulating oil may be a limiting factor on the allowable time between maintenance operations on the switchgear (see also 16.8.3.8).

NOTES

1—The presence of carbon particles alone in oil does not necessarily indicate that the oil is in an unacceptable condition.

2—Where insulating oil is used only for insulation, special testing techniques (e.g., dissolved gas analysis) may be necessary to detect deterioration of the oil or associated insulation.

16.5.3.4 Normal maintenance tests

Electrical strength tests and, where ingress of moisture is likely, water content tests are recommended as the normal maintenance tests (see ASTM STP 998).

16.5.3.5 Oil testing

The user may decide upon the acceptable number of operations before oil is tested, by reference to operating experience, test experience, and/or consultation with the switchgear manufacturer.

Copyright © 2001 IEEE. All rights reserved.

--`,,`,,`-`-`,,`,,`,`,,`---

Copyright The Institute of Electrical and Electronics Engineers, Inc.
Provided by IHS under license with IEEE
No reproduction or networking permitted without license from IHS Not for Resale

16.5.4 Recommended intervals

16.5.4.1 General

The recommended intervals given in 16.5.4.2 through 16.5.4.5 are a guide to setting up a maintenance program. Assistance and/or advice may be obtained from the manufacturer of the equipment, the local utility, the insurance underwriter, and independent testing laboratories (see NFPA 70B-1998).

16.5.4.2 Circuit breakers

An operational check of circuit breakers (see 16.7.4) should be made at regular intervals.

16.5.4.3 Indoor switchgear

For switchgear in indoor situations that are dry and well ventilated and for switchgear in atmospheric conditions that are not unduly corrosive when the switchgear is on non-nominal distribution duties (e.g., used infrequently to make or break normal load currents), the following is given as a guide:

— Inspect and clean regularly, with a maximum interval of 12 mo.
— Examine normally at 5 y intervals.
— Overhaul when and to the extent that inspection, examination, or diagnostic testing indicates that overhauling is necessary, with a maximum interval of 15 y.

NOTE—The intervals quoted are given as a guide and are based on a three-stage maintenance policy of inspection, examination, and overhaul. Where the policy is based on two stages (i.e., inspection and overhaul), the maximum advisable interval between overhauls may be reduced to 10 y.

16.5.4.4 Outdoor switchgear

For outdoor switchgear where the atmospheric conditions of the site are reasonably clean and the switchgear is not subject to excessive pollution, the intervals given in 16.5.4.3 may be considered for normal distribution duties, but these intervals may need to be reduced due to adverse conditions.

16.5.4.5 Frequent operation or adverse atmospheric conditions

For switchgear that is frequently operated or that is situated in adverse atmospheric conditions, the intervals between maintenance operations should be less than the intervals stated in 16.5.4.3. In the case of circuit breakers operated frequently to control (e.g., an electric arc furnace), the intervals between maintenance operations could be measured in weeks.

In such cases, relating the intervals to the number of switching operations rather than time may be preferable.

See 16.8 for a summary of recommended maintenance operations for oil switchgear.

Copyright © 2001 IEEE. All rights reserved.

Copyright The Institute of Electrical and Electronics Engineers, Inc.
Provided by IHS under license with IEEE
No reproduction or networking permitted without license from IHS
Not for Resale

16.6 Maintenance of switchgear for voltages up to 1000 V ac and 1200 V dc

16.6.1 Premaintenance requirements and precautions

16.6.1.1 Safety of personnel

To establish safe working conditions for the maintenance of switchgear intended to operate at ac voltages up to 1000 V and dc voltages up to 1200 V, the requirements given in 16.3 and 16.4 should be followed.

16.6.1.2 Equipment to be rendered inoperative

OSHA requires that all equipment to be worked on be de-energized and isolated see CFR 1910.333). OSHA requires that equipment that is not grounded shall be considered as operating at the highest voltage in the area (see CFR 1910.333). If making the equipment dead and isolated is not practicable, at least all closing and opening devices should be made inoperative. This step can usually be achieved as follows:

a) *For closing devices*—by discharging any stored energy devices and by removing fuses or links in the control closing circuits.

b) *For tripping devices*—by tripping any tripping devices and by removing fuses or links in the tripping and auxiliary circuits. Any stored energy devices should have their energy discharged.

16.6.1.3 Manufacturers' operation and maintenance instructions

Each equipment manufacturer's operation and maintenance instructions provide guidance that should be read in conjunction with this clause.

16.6.1.4 Replacement parts

Ensuring the suitability and interchange ability of replacement parts is important.

16.6.2 Frequency of maintenance

The interval that can be allowed between consecutive maintenance operations on switchgear depends on the operating conditions of the controlled circuits. The criteria to be considered when deciding the intervals between maintenance operations are outlined in 16.5. Usually the intervals are related to the number of switching operations and to time (see ANSI C37.16-1988).

16.6.3 Diagnostic testing

Where practicable, the maximum use may be made of diagnostic testing techniques to indicate the condition of equipment and to prolong the intervals between dismantling. Records

 Copyright © 2001 IEEE. All rights reserved.

Copyright The Institute of Electrical and Electronics Engineers, Inc.
Provided by IHS under license with IEEE
No reproduction or networking permitted without license from IHS Not for Resale

should be kept of all diagnostic tests so that comparisons can be made and trends estimated; checklists alone, which indicate only that measurements have been taken, are not sufficient.

Diagnostic techniques applicable to switchgear are given in 16.11.

16.6.4 Routine maintenance

16.6.4.1 Inspection

16.6.4.1.1 General inspection

A general inspection of the electrical station verifies that attention is being given to general cleanliness, heating, ventilation, and other relevant requirements detailed in 16.4. During this inspection, the condition of weather seals, signs of corrosion, leakage of oil or compound, unusual smells that may indicate overheating, and noises that may indicate electrical discharge or looseness of components may be investigated.

Also, as far as reasonably practicable, verify that external insulation, trip mechanism, optional shutter mechanism in metal-enclosed low-voltage power circuit breaker (LVPCB) switchgear, ground connection, and other visible parts are inspected for any signs of abnormality.

Inspection verifications include that ancillary equipment, spare fuses, special tools, and other equipment required for the operation of the switchgear are available and in good order.

16.6.4.1.2 Inspection of specific items of equipment

Verity that attention is given to the items where a clause number is shown in the "Routine maintenance" column of Table 16-1 (see 16.6.7).

If possible, exercising of circuit breakers should be conducted to verify free mechanism movement and to redistribute and prolong the lubricants' functional life.

16.6.4.2 Examination and overhaul

16.6.4.2.1 General

Overhauls are usually performed when an inspection, examination, or manufacturer's recommendation indicates they are necessary. Operations that may be required to be carried out during maintenance are given in 16.6.4.2.2 through 16.6.4.2.14.

16.6.4.2.2 Cleaning

Verify that all loose external dirt is first removed. In the cleaning of switchgear, what is generally known as cotton waste should not be used. Verify that material used for cleaning is clean and free from loose fibers, metallic threads, and similar particles. Brushes and blower nozzles of nonmetallic material should be used.

Copyright © 2001 IEEE. All rights reserved.

Copyright The Institute of Electrical and Electronics Engineers, Inc.
Provided by IHS under license with IEEE
No reproduction or networking permitted without license from IHS
Not for Resale

Verify that care is taken to prevent loose parts, tools, metal filings, or dirt from falling into the apparatus.

Cleaning fluids and lubricants should be carefully selected to ensure compatibility with organic insulation, plastics, valve gear and bearings, rubber and synthetic O rings, and other materials used in the construction of the equipment. Verify that they are also safe for use by personnel. Certain cleaning fluids and most aerosol lubricants tend to debase grease lubricants and leave them to harden and impede sensitive mechanical mechanisms. Cleaning fluids should be reviewed with the manufacturer.

16.6.4.2.3 Insulation

Verify that insulation is inspected, cleaned, and renewed where necessary. Inspections of porcelain and molded insulation may reveal cracks or other defects. Inspections of bonded and laminated fibrous and other organic insulation may reveal signs of tracking, treeing, blistering, delamination, or mechanical damage. On this type of equipment, which often cannot be isolated, insulation-resistance tests may be necessary only where the insulating material is suspect or when the connected circuits are to be tested.

For further information on the maintenance and testing of insulation, see 16.14.

16.6.4.2.4 Equipment enclosures

Verify the operation of any heaters. Inspections of equipment and enclosures may reveal rust, corrosion, ingress of water, clogging of filters (if any), and condition of ground electrodes and connectors.

16.6.4.2.5 Contacts

a) Contacts of circuit breakers should be examined for burning, overheating, misalignment, or other damage and should be reconditioned or renewed as required. Verify that bolted or wedge contacts are correctly tightened, by use of special tools, if provided.

   Overheating may be caused by overloading, loose connections, insufficient contact force, ineffective fuse-link contact, or lack of alignment of switch contacts. Sometimes overheating may be detected only with the equipment under load.

   Infrared diagnostic testing can be utilized when safe access is possible via switchgear rear hinged door panels.

b) Slight discoloration or burning of bare copper or copper alloy contacts is not necessarily harmful, but may be removed by suitable abrasive cloth or a fine file. The manufacturer's recommended contact profile should be maintained, and care is necessary to minimize the amount of material removed. Verify that the spring force between the contact surfaces is not significantly reduced.

   Modern high-pressure point or line contacts normally carry their rated current satisfactorily even if some pitting of the surface exists. Large beads or ridges on the

Copyright © 2001 IEEE. All rights reserved.

--`,,`,,`-`-`,,`,,`,`,,`---

Copyright The Institute of Electrical and Electronics Engineers, Inc.
Provided by IHS under license with IEEE
No reproduction or networking permitted without license from IHS Not for Resale

contacting members that would seriously impede closing or opening may be removed in accordance with the manufacturer's instructions.

c) Attempting to clean or dress tipped or plated contacts is usually undesirable, and following the manufacturer's recommendations is paramount. Silver or silver-plated contacts seldom require cleaning despite a black appearance.

d) Verify that, when contacts are refitted, renewed, or refurbished, the contact force, alignment, and wipe are maintained.

e) Verify that any flexible braids are inspected, especially for fraying at the terminations, and renewed if necessary. Where exposed to the atmosphere, the braids may be treated with a suitable protective compound that does not impair their flexibility.

f) Any recommendations of the manufacturer for treatment of the contacts should be followed. Caution is advised when using lubricants in dusty situations.

16.6.4.2.6 Arc-control devices and interpole barriers in vicinity of arc

Verify that arc-control devices and interpole barriers in the vicinity of the arc are examined and are cleaned or, if badly burned, replaced.

Where the surface finish of an arc-control device is critical to its performance, verify that any cleaning of the device does not cause abrasion.

As far as is reasonably practicable, verify that arc-control devices are examined to ensure that they are securely fastened, correctly adjusted, and electrically connected. All adjustments should be performed only in accordance with the manufacturer's instruction.

16.6.4.2.7 Mechanisms

Verify that mechanisms of circuit breakers are cleaned and examined and any worn parts renewed. Verify that circlips are correctly seated and that cotter pins are properly installed.

16.6.4.2.8 Indicating devices and interlocks

— *Indicating devices*. Indicating devices (e.g., mechanical ON and OFF indicators, semaphores) should be inspected to ensure that they are in good order and operating correctly.
— *Interlocks*. Verify that interlocks and locking devices receive particular attention, especially such devices associated with grounding and testing facilities. A strained or worn device may result in a dangerous condition.

Provided the necessary precautions have been taken, verify that any incorrect operation is satisfactorily inhibited. Lubricant should be applied as necessary.

Refer to 16.6.4.2.2 concerning care in selection of proper lubricants. The safety-related interlocks should be checked for proper operation in accordance with IEEE Std C37.20.2-1999 (e.g., open before removal, trip-free during removal, spring discharge).

Copyright © 2001 IEEE. All rights reserved.

Copyright The Institute of Electrical and Electronics Engineers, Inc.
Provided by IHS under license with IEEE
No reproduction or networking permitted without license from IHS
Not for Resale

16.6.4.2.9 Connections

Verify that all joints are sound and that good contact is maintained on current-carrying, main ground, and secondary ground connections.

NOTE—When remaking aluminum connections, recoat and wire-brush the connections.

16.6.4.2.10 Fuses

Verify that fuse connections are tight and that the rating of fuses is correct. In renewable fuses, examine fuse-links for signs of deterioration.

Check fuse ferrules for signs of overheating.

16.6.4.2.11 Cable terminations

Inspect cable terminations and risers for overheating of connections or distortion.

16.6.4.2.12 Contactors

Inspect contactors as follows:

a) Verify that loose particles and dust from arc chutes are removed and replace the arc chutes where necessary. Inspect contacts and springs. Contacts are normally allowed to bed in until erosion necessitates replacement.

CAUTION

Provide personnel with protection when working with asbestos, such as asbestos arc chutes (see OSHA 1926.58 and ASTM E849).

b) Verify that pivots are lightly lubricated if required (refer to manufacturer's instructions) and armature pole faces cleaned. Verify that any shading rings are in position.

c) Verify that contacts are free to operate and cannot damage the arc chutes.

d) Verify the alignment and security of the tube and flexible connections of mercury tube contacts.

16.6.4.2.13 Bus bars and bus bar compartments

Verify that any barriers and supports are examined, as much as reasonably practicable, and in accordance with the following:

a) *Air-insulated equipment*. For air-insulated equipment, the examination includes any removal of covers to enable connections to be inspected and any chambers to be cleaned.

b) Reserved.

 Copyright © 2001 IEEE. All rights reserved.

Copyright The Institute of Electrical and Electronics Engineers, Inc.
Provided by IHS under license with IEEE
No reproduction or networking permitted without license from IHS Not for Resale

16.6.4.2.14 Final verification

Before the equipment is returned to service, verify that the following have been done:

a) Tightness of circuit and ground connections has been verified.
b) Insulation resistance of the circuit, including auxiliary wiring where practicable, has been verified (see 16.6.4.2.3).
c) An operational check has been performed.
d) The circuit breakers have been placed back into their original positions to ensure no change in the protective settings for the subject circuits.

16.6.5 Post-fault maintenance of circuit breaker switchgear

Depending on the design and duty of the switchgear, inspection may be necessary after operation due to a fault. Where such an inspection is necessary, verify that attention is given to the following:

a) *Cleaning*. Insulation and other parts are cleaned and inspected for signs of cracking, burning, tracking, or other damage.
b) *Contacts and arc-control devices*. Contacts and arc-control devices are inspected for burning or other damage and are reconditioned or renewed where necessary. The contact force, alignment, and wipe are checked (see also 16.6.4.2.5).
c) *Mechanisms*. The mechanism is checked for correct operation.
d) *Insulation resistance*. The insulation resistance is measured and recorded before the equipment is returned to service.

16.6.6 Maintenance of auxiliary equipment

Recommendations applicable to auxiliary equipment that may form part of the switchgear are given in 16.12.

16.6.7 Summary of maintenance operations

The maintenance operations recommended for switchgear intended for operation at ac voltages up to 1000 V and dc voltages up to 1200 V are summarized in Table 16-1. A reference to a clause number in the columns indicates the appropriate maintenance operations.

Copyright © 2001 IEEE. All rights reserved.

Copyright The Institute of Electrical and Electronics Engineers, Inc.
Provided by IHS under license with IEEE
No reproduction or networking permitted without license from IHS Not for Resale

Table 16-1—Maintenance operations for switchgear for voltages up to 1000 V ac and 1200 V dc

Maintenance operation	Premaintenance requirements	Routine maintenance		Post-fault maintenance
		Inspection	Examination and overhaul	
Safety of personnel	16.6.1.1			
Equipment to be rendered inoperative	16.6.1.2			
General inspection		16.6.4.1.1	16.6.4.1.1	
Diagnostic testing			16.6.3 and 16.11	
Operational check		16.6.4.2.2	16.6.4.2.2	16.6.5
Insulation		16.6.4.2.3	16.6.4.2.3	16.6.5
Contacts		16.6.4.2.5	16.6.4.2.5	16.6.5
Arc-control devices		16.6.4.2.6	16.6.4.2.6	16.6.5
Mechanisms		16.6.4.2.7	16.6.4.2.7	16.6.5
Indicating devices and interlocks		16.6.4.2.8	16.6.4.2.8	
Connections			16.6.4.2.9	
Fuses		16.6.4.2.10	16.6.4.2.10	
Cable terminations		16.6.4.2.11	16.6.4.2.11	
Contactors			16.6.4.2.12	
Bus bar and bus bar compartments			16.6.4.2.13	
Final verification			16.6.4.2.14	16.6.4.2.14
Auxiliary equipment		16.12	16.12	16.6.5

[a]The numbers quoted in the columns refer to the appropriate clause numbers in this recommended practice.

Copyright © 2001 IEEE. All rights reserved.

Copyright The Institute of Electrical and Electronics Engineers, Inc.
Provided by IHS under license with IEEE
No reproduction or networking permitted without license from IHS
Not for Resale

16.7 Maintenance of air-magnetic switchgear for voltages above 1000 V ac and 1200 V dc

16.7.1 Premaintenance requirements and precautions

16.7.1.1 Safety of personnel

To establish safe working conditions for the maintenance of air-break switchgear intended for operation at ac voltages above 1000 and dc voltages above 1200 V, the requirements given in 16.3 and 16.4 should be followed. For operating disconnect devices rated at ac voltages above 1000 V, personnel should use tested high-voltage gloves.

16.7.1.2 Equipment to be rendered inoperative

Verify that power-closed switchgear and any associated remote controlling equipment are rendered inoperative. This step can usually be achieved by taking the following action as appropriate:

a) *Solenoid-closed switchgear.* Isolate the main solenoid power supply.

b) *Spring-closed switchgear.* Discharge the closing spring. For a motor-wound spring-closing mechanism, first, isolate the motor power supply; second, confirm that the closing spring is discharged; and third, discharge the opening spring.

c) Reserved.

d) *Stored energy devices*. Verify that the stored energy device is discharged.

e) *Tripping devices*. Verify that the tripping device is tripped.

f) *Fuses*. Verify that the fuse is removed.

g) *Removable or drawout circuit breaker switchgear.* Verify that the primary disconnects are isolated and grounded before any work is performed on them.

h) *Shutters*. Verify that any shutters or other devices preventing access to isolating contacts that may be live are locked closed.

16.7.1.3 Manufacturers' operation and maintenance instructions

The guidance in 16.6.1.3 applies.

16.7.1.4 Replacement parts

The guidance in 16.6.1.4 applies.

16.7.2 Frequency of maintenance

Refer to 16.5.

Copyright © 2001 IEEE. All rights reserved.

Copyright The Institute of Electrical and Electronics Engineers, Inc.
Provided by IHS under license with IEEE
No reproduction or networking permitted without license from IHS
Not for Resale

16.7.3 Diagnostic testing

The guidance in 16.6.3 applies.

16.7.4 Operational check

Where practicable, trip and reclose every circuit breaker at regular intervals to verify that it is capable of satisfactory operation. Initiate the tripping by commanding the protective relay to operate and energize the electrical trip coil. Then verify that the circuit breaker has operated.

16.7.5 Routine maintenance

16.7.5.1 Inspection

16.7.5.1.1 General inspection

The guidance in 16.6.4.1.1 applies.

16.7.5.1.2 Inspection of specific items of equipment

Verify that attention is given to the items where a clause number is shown in the "Routine maintenance" column of Table 16-2.

16.7.5.2 Examination and overhaul

16.7.5.2.1 General

Overhauls should be performed only when an inspection, examination, or manufacturer's recommendation indicates they are necessary.

Operations that may be required to be performed are given in 16.7.5.2.2 through 16.7.5.2.21.

16.7.5.2.2 Cleaning

Verify that all loose external dirt is first removed. To avoid ingress of dirt into any internal portion of the circuit breaker, verify that any joint or gasket is cleaned prior to commencing any dismantling.

In the cleaning of switchgear, what is generally known as cotton waste should not be used. Verify that materials used for cleaning are clean and free from loose fibers, metallic threads, and similar particles. Verify that brushes and blower nozzles contain no metallic material.

Care should be taken to prevent loose parts, tools, metal filings, or dirt from falling into the apparatus.

Verify that cleaning fluids and lubricants applied after cleaning are carefully selected to ensure compatibility with organic insulation, plastics, valve gear and bearings, rubber and

 Copyright © 2001 IEEE. All rights reserved.

Copyright The Institute of Electrical and Electronics Engineers, Inc.
Provided by IHS under license with IEEE
No reproduction or networking permitted without license from IHS Not for Resale

synthetic O rings, and other materials used in the construction of the equipment. Nontoxic labels on the materials to indicate safe use by personnel are required. Certain cleaning fluids and most aerosol lubricants tend to debase grease lubricants and leave them to harden and impede sensitive mechanical mechanisms. Review cleaning fluids and lubricants with the manufacturer.

16.7.5.2.3 Insulation

Verify that insulation is inspected, cleaned, and renewed where necessary. Inspect porcelain and molded insulation for cracks or other defects. Inspect bonded and laminated fibrous and other organic insulation for signs of tracking, treeing, blistering, delamination, or mechanical damage. Insulation-resistance tests on organically insulated bus, such as used in metal-clad switchgear, are strongly recommended as these tests give an indication of the condition of the insulation.

For further information on the maintenance and testing of insulation, see 16.14.

16.7.5.2.4 Equipment enclosures

Refer to 16.6.4.2.4.

16.7.5.2.5 Contacts

Examine and overhaul contacts as follows:

a) Verify that contacts are examined for burning or other damage and are reconditioned or renewed as required. Verify that any backing springs are exerting the correct force and that the contacts are in correct alignment.

   Arcing contacts may show signs of burning and erosion, but such signs are not harmful provided that they are not excessive and provided that the correct spacing between the arcing and main contacts can be obtained. Verify that the security of any arc-resisting tips are checked. The normal duty of arcing tips is to carry the arc root; but, if excessive burning and/or erosion is present, then the arcing tips require replacement.

b) Verify that hinge contacts are examined for any signs of overheating, burning, welding, or other damage. Verify that they are reconditioned, adjusted, or replaced as necessary. Investigate any damage found. Verify that contacts are inspected for signs of arcing in other than normal places.

c) Slight discoloration or burning of bare copper or copper-alloy contacts is not necessarily harmful, but may be removed by suitable abrasive cloth or a fine file. Verify that the amount of material removed from contacts is kept to a minimum and that the manufacturer's recommended profile is maintained. Renewal of the contacts may be necessary. Verify that the spring force between the contact surfaces remains at the required level.

   Modern high-pressure point or line contacts normally carry their rated current satisfactorily even if some pitting of the surface exists. Large beads or ridges on the

Copyright © 2001 IEEE. All rights reserved.

Copyright The Institute of Electrical and Electronics Engineers, Inc.
Provided by IHS under license with IEEE
No reproduction or networking permitted without license from IHS
Not for Resale

contacting members that would seriously impede closing or opening should be removed.

d) For circuit breakers using high-pressure contacts (e.g., high-speed circuit breakers) or special tipped contacts, attempting to clean or to dress the contacts is usually undesirable, and the manufacturer's recommendations should be followed. Silver or silver-plated contacts seldom require cleaning.

e) For laminated wiping contacts, verify that the manufacturer's recommendations are followed.

f) When contacts are refitted, renewed, or refurbished, verify that contact force, alignment, and wipe are maintained.

g) Any flexible braids should be inspected, especially for fraying at the terminations, and renewed if necessary. Where exposed to the atmosphere, the braids may be treated with a suitable protective compound that does not impair their flexibility.

h) The manufacturers' recommendations should be followed concerning lubrication of contacts, pivots, and hinge pins.

16.7.5.2.6 Arc-control devices and interpole barriers in vicinity of arc

Verify that arc-control devices and interpole barriers in the vicinity of the arc are examined and are cleaned or, if badly burned, replaced.

Where the surface finish of an arc-control device is critical to its performance, the device requires replacement.

Verify that any air-puffer device is checked for correct operation.

Check the air pistons.

As far as is reasonably practicable, verify that arc-control devices are examined to ensure that they are securely fastened, correctly adjusted, and electrically connected. Verify that all adjustments are performed in accordance with the manufacturer's instructions.

16.7.5.2.7 Mechanisms

a) *General*. During inspection or examination of mechanisms, verify that care is taken to avoid the possibility that fingers can be trapped and that anyone can be struck by moving parts.

b) *Retaining clips and cotter pins*. Verify that circlips are perfectly seated and that cotter pins are properly installed.

c) *Tripping mechanism*. Verify that the tripping mechanism is cleaned and examined and any worn parts renewed.

Verify that rolling or sliding surfaces in the trip mechanism are free from dried-up lubricant. Verify that the mechanical items of the tripping mechanism are inspected, cleaned, lubricated sparingly with the recommended lubricant, and adjusted as required. Verify that particular care is taken with plastic bearings or components

Copyright © 2001 IEEE. All rights reserved.

--`,,`-`-`,,`,,`,`,,`---

Copyright The Institute of Electrical and Electronics Engineers, Inc.
Provided by IHS under license with IEEE
No reproduction or networking permitted without license from IHS Not for Resale

because the use of an incorrect lubricant can often have a deleterious effect. Refer to 16.7.5.2.2 concerning care in selection of proper lubricants.

Verify the correct operation.

Record the force required to release the tripping mechanism.

Inspect the trip coil plungers for free movement. Do not lubricate.

Verify that any adjustments to tripping mechanisms comply with the manufacturer's instructions.

d) *Closing mechanism*. Verify that the closing mechanism is cleaned and examined and any worn parts renewed. Verify that the closing mechanism is lubricated as necessary and all surplus oil and grease are removed.

Verify that the mechanical details of the closing mechanism are examined and that any damping devices operate correctly. For spring closing gear, special attention should be paid to gears, ratchet wheels, and pawls. They should be examined closely for broken or chipped teeth. Record the force required to operate the closing release.

Verify that, where motor-wound springs are employed, the motor and its connections are examined and the reduction gear treated with the recommended lubricant.

16.7.5.2.8 Auxiliary switches, indicating devices, and interlocks

a) *Auxiliary switches*. Verify that auxiliary switches are kept in clean and sound condition because the correct functioning of other items of equipment, including protective gear, depend upon them.

The contacts should be inspected, cleaned, and replaced (if necessary). Where possible, verify the correct contact force, freedom of operating links, and correct timing of contacts in relation to the circuit breaker contacts.

b) *Indicating devices*. Indicating devices (e.g., mechanical ON and OFF indicators, semaphores) require verification and inspection to ensure that they are in good order and operating correctly.

c) *Interlocks*. Verify that interlocks and locking devices receive particular attention, especially such devices associated with grounding and testing facilities. A strained or worn device may result in a dangerous condition.

Provided the necessary precautions have been taken, verify that any incorrect operation is satisfactorily inhibited. Verify that lubricant is applied as necessary.

Verify that the safety-related interlocks are checked for proper operation in accordance with IEEE Std C37.20.2-1999 (e.g., open before removal, trip-free during removal, and spring discharged).

d) *Contact timing*. Verify that particular attention is given to the required timing of the auxiliary contacts controlling the trip circuit.

Copyright © 2001 IEEE. All rights reserved.

Copyright The Institute of Electrical and Electronics Engineers, Inc.
Provided by IHS under license with IEEE
No reproduction or networking permitted without license from IHS
Not for Resale

16.7.5.2.9 Reserved

16.7.5.2.10 Protective relays

Recommendations for routine maintenance for protective relays are given separately in 16.13.

16.7.5.2.11 Instrument and control power transformers

Recommendations for routine maintenance for instrument and control power transformers are given separately in 16.12 and 16.13.

16.7.5.2.12 Control relays or contactors

With the control and main solenoid or motor circuit isolated, verify that the mechanical parts of control relays or contactors are inspected for free movement. Verify that loose particles and dust are removed from arc chutes and that the arc chutes are replaced where necessary. Verify that contacts are inspected and renewed where necessary.

Verify that any flexible braids are inspected, especially for fraying at the terminations, and renewed when necessary. Where exposed to external atmosphere, the braids may be treated with a suitable protective compound that does not impair their flexibility.

16.7.5.2.13 Connections

Verify that all joints are sound and that good contact is maintained on current-carrying, main ground, and secondary ground connections.

NOTE—When remaking aluminum connections, recoat and wire-brush the connections.

16.7.5.2.14 Secondary wiring and fuses

Verify that connections of secondary wiring and fuses are tight, that good contact is maintained, and that terminal boxes are free from dirt and moisture. Verify the continuity of wiring to the fuses, instrument transformers, relays, instruments, motors, and other associated items. Consider insulation-resistance testing of wiring.

Verify that all contacts, including plug and socket contacts, are cleaned and lubricated sparingly with the recommended lubricant. Caution should be taken when using lubricants in dusty situations.

Inspect fuses for signs of deterioration.

Verify that the fixed contacts carrying the fuses have satisfactory contact and are cleaned if necessary.

Copyright © 2001 IEEE. All rights reserved.

--`,,`-`-`,,`,,`,`,,`---

Copyright The Institute of Electrical and Electronics Engineers, Inc.
Provided by IHS under license with IEEE
No reproduction or networking permitted without license from IHS Not for Resale

16.7.5.2.15 Heaters

Verify the correct operation of any heaters.

16.7.5.2.16 Isolators and grounding switches

a) *Operation*. Verify the correct operation of isolators and grounding switches. Verify that the contacts are examined for signs of burning or overheating and that the contact force is verified.

b) *Interlocking*. Provided the necessary precautions have been taken, verify the correct interlocking between these switches and the circuit breaker or other associated switchgear.

c) *Linkages*. Verify that linkages are carefully cleaned and a suitable lubricant applied. Verify that the alignment of drive links and operating rods is correct and adjust as necessary.

   Verify that all poles operate freely and simultaneously and that the main contacts are held positively in the fully engaged position when the operating linkage is in the ON or CLOSED position. Conversely verify that the main contacts are fully open when the operating linkage is in the OFF or OPEN position.

d) *Contacts*. Verify that the main and auxiliary contacts are inspected, cleaned or renewed, and lubricated sparingly, if required, with the recommended lubricant. Verify that contact pressure or circumferential springs exert correct force and that contacts are in correct alignment.

e) *Hinged contact springs*. Verify the correct force of hinged contact springs and that lubricant is applied to the hinges. Verify that flexible connections are inspected for fraying, especially at the terminations, and for deterioration of any protective jackets. Protective compound may be applied to protect bare copper flexible braids in outdoor conditions. Verify that the linkages are secure and that a correct lubricant is applied to the pivots of any supporting pantograph.

f) *Arc horns*. Verify that arc horns are inspected for damage and security of mounting hardware. Verify that the horn wipes lightly through the opening stroke and does not inhibit the closing stroke.

g) *Insulation*. Verify that insulation is carefully cleaned and inspected for cracks or other damage and any defective components renewed.

h) *Operating rod insulators*. Verify that operating rod insulators, such as wood laminates, are examined for both mechanical and electrical condition and are replaced as necessary.

i) *Joints and connections*. Verify that all joints and connections, including ground connections, are sound.

   NOTE—When remaking aluminum connections, recoat and wire-brush the connections.

Copyright © 2001 IEEE. All rights reserved.

Copyright The Institute of Electrical and Electronics Engineers, Inc.
Provided by IHS under license with IEEE
No reproduction or networking permitted without license from IHS
Not for Resale

16.7.5.2.17 Shutters

Verify the operation of all shutter mechanisms. This verification should normally be carried out immediately after removal of the equipment from its housing or immediately prior to energizing.

Verify that lubrication of the operating mechanism and associated linkage is done sparingly, as recommended by the manufacturer.

16.7.5.2.18 Switchgear disconnects

Verify that disconnects are grounded, examined, and cleaned where necessary and that surfaces are inspected for signs of mechanical or electrical deterioration.

Immediately prior to returning the switchgear to the service position, verify that a visual inspection of the disconnects is performed.

16.7.5.2.19 Bus bars and bus bar compartments

Verify that any barriers and supports are examined, as much as reasonably practicable, and in accordance with the following:

a) *Air-insulated equipment*. For air-insulated equipment, the examination includes the removal of covers to enable connections to be inspected and any enclosures to be cleaned.

b) *Compound-filled equipment*. For compound-filled equipment, the examination is limited to the verification of the filling level and an inspection for signs of leakage of the compound, moisture ingress, and irregularities on the surface of the compound.

To check for possible deterioration of the compound, verify that the insulation resistance is recorded at regular intervals (e.g., every 3 y and adjusted by experience). Any significant change in values may require a thorough investigation of the condition of the compound.

16.7.5.2.20 Weather shields

Verify that any weather shield fitted to the equipment is securely fixed and that it is in a serviceable condition before the equipment is re-energized.

16.7.5.2.21 Final verification

Before the equipment and auxiliary apparatus are returned to service, verify that an insulation-resistance test has been performed and recorded (see 16.14), followed by an operational check, including the recording of opening and closing times.

Copyright © 2001 IEEE. All rights reserved.

Copyright The Institute of Electrical and Electronics Engineers, Inc.
Provided by IHS under license with IEEE
No reproduction or networking permitted without license from IHS Not for Resale

16.7.6 Post-fault maintenance of circuit breaker switchgear

Depending on the design and duty of the switchgear (see 16.5), inspection may be necessary after operation due to a fault. Where such an inspection is necessary, verify that attention is to be given to the following:

a) *Cleaning*. Insulation and other parts susceptible to deposition from metal vapor are cleaned and inspected for signs of cracking, burning, tracking, or other damage.

b) *Contacts and arc-control devices*. Contacts are inspected for burning or other damage and are reconditioned or replaced if necessary. Contact force, alignment, and wipe are verified.

   To remove traces of metal deposits, removing the arc-control devices and reconditioning or replacing them are generally necessary.

c) *Mechanisms*. The mechanism operates correctly, and particular attention is paid to settings and clearances after contact or arc-control devices are replaced.

d) *Insulation resistance*. The insulation resistance is tested, recorded, and compared with the prefault values before putting the switchgear back into service.

16.7.7 Maintenance of auxiliary equipment

Recommendations applicable to auxiliary equipment that may form part of the switchgear are given in 16.12.

16.7.8 High-voltage fuse connections and associated linkage

Verify that, where applicable, the operation of a single fuse causes all other poles to open and that the manual ON/OFF or CLOSED/OPEN trip mechanism functions correctly.

Verify that only approved fuses for the particular equipment are installed.

When replacing a blown fuse in a multiphase set, replace the remaining fuses, subject to advice from the fuse manufacturer.

16.7.9 Summary of maintenance operations

The maintenance operations recommended for air-magnetic switchgear intended for operation at ac voltages above 1000 V and dc voltages above 1200 V are summarized in Table 16-2. A reference to a clause number in the columns indicates the appropriate maintenance operation.

Copyright © 2001 IEEE. All rights reserved.

Copyright The Institute of Electrical and Electronics Engineers, Inc.
Provided by IHS under license with IEEE
No reproduction or networking permitted without license from IHS
Not for Resale

Table 16-2—Maintenance operations for air-magnetic switchgear for voltages up to 1000 V ac and 1200 V dc

Maintenance operation	Premaintenance requirements	Routine maintenance		Post-fault maintenance
		Inspection	Examination and overhaul	
Safety of personnel	16.7.1.1			
Equipment to be rendered inoperative	16.7.1.2			
Diagnostic testing		16.7.3	16.7.3	
Operational check		16.7.4	16.7.4	16.7.4
General inspection		16.7.5.1.1	16.7.5.1.1	
Cleaning			16.7.5.2.2	
Insulation		16.7.5.2.3	16.7.5.2.3	
Enclosures		16.7.5.2.4	16.7.5.2.4	
Contacts			16.7.5.2.5	16.7.6
Arc-control devices and interpole barriers			16.7.5.2.6	16.7.6
Mechanisms			16.7.5.2.7	16.7.6
Auxiliary switches			16.7.5.2.8	
Indicating devices and interlocks			16.7.5.2.8	
Isolating contacts			16.7.5.2.9	
Overload devices, protective relays		16.13	16.13	
Instrument and protective transformers			16.12 and 16.13	
Control relays or contactors			16.7.5.2.12	
Connections			16.7.5.2.13	
Secondary wiring and fuses			16.7.5.2.14	
Heaters			16.7.5.2.15	
Isolators and grounding switches		16.7.5.2.16	16.7.5.2.16	
Shutters			16.7.5.2.17	

Copyright © 2001 IEEE. All rights reserved.

--`,,`-`-`,,`,,`,`,,`---

Copyright The Institute of Electrical and Electronics Engineers, Inc.
Provided by IHS under license with IEEE
No reproduction or networking permitted without license from IHS Not for Resale

Table 16-2—Maintenance operations for air-magnetic switchgear for voltages up to 1000 V ac and 1200 V dc (*Continued*)

Maintenance operation	Premaintenance requirements	Routine maintenance		Post-fault maintenance
		Inspection	Examination and overhaul	
Switchgear disconnects		16.7.5.2.18	16.7.5.2.18	
Bus bars and bus bar compartments			16.7.5.2.19	
Weather shields			16.7.5.2.20	
Final verification		16.7.5.2.21	16.7.5.2.21	16.7.5.2.21
Auxiliary equipment		16.12	16.12	
High-voltage fuse connections and associated links		16.7.8	16.7.8	

[a]The numbers quoted in the columns refer to the appropriate clause numbers in this recommended practice.

16.8 Maintenance of oil switchgear

16.8.1 Application of section

The guidance in 16.7 applies to the maintenance of oil switchgear with the additions and modifications given in 16.8.2 through 16.8.4.

16.8.2 Special precautions for oil switchgear

The following special precautions are advised for oil switchgear:

a) Where oil is or has been directly exposed to the atmosphere, verify that smoking or open flames are prohibited.

b) Particular care should be taken when personnel are required to enter bulk oil circuit breaker tanks (see Jan. 1986 *NIOSH Alert!*). Before entering large oil circuit breaker tanks after the oil has been drained, care should be taken to see that sufficient time has elapsed to permit the gas residue remaining in the circuit breaker to escape. In addition, operating temporary fans or other air-handling equipment may ensure a safe exchange of fresh air.

c) Under no circumstances is the switchgear to be operated with the tank down or devoid of oil, without first referring to the manufacturer's instructions and taking all necessary safety precautions.

Copyright © 2001 IEEE. All rights reserved.

--`,,`-`-`,,`,,`,`,,`---

Copyright The Institute of Electrical and Electronics Engineers, Inc.
Provided by IHS under license with IEEE
No reproduction or networking permitted without license from IHS
Not for Resale

16.8.3 Routine maintenance, examination, and overhaul

The guidance in 16.7.5 applies to the routine maintenance of oil switchgear with the conditions and modifications for examinations and overhauls given in 16.8.3.1 through 16.8.3.10.

16.8.3.1 Cleaning

For the cleaning of oil compartments, a good practice is to use only chamois leather or plastic sponges.

16.8.3.2 Insulation

Verify that oil-filled bushings are inspected for leaks and that the oil level is checked and corrected if necessary.

Verify that any water sumps of oil barrier bushings are drained.

NOTE—As conducting films can occur on the bushings of outdoor switchgear, special cleaning liquids may be recommended by the manufacturer.

16.8.3.3 Arc-control devices

a) Verify that arc-control devices are inspected or examined; are cleaned; and, if the volume or orifice size has changed or if the devices are badly burned, are replaced. Verify that care is taken that vent holes and contact orifices are cleaned and the devices flushed out with clean oil before being refitted. Retightening of any assembly bolts may be necessary.

b) Verify that arc-control devices made from compressed fibrous materials that cannot be cleaned without abrasion are replaced. Other materials require treatment in accordance with the manufacturer's instructions.

   Verify that assemblies that have been removed are immersed in clean oil during work delays to prevent entry of moisture.

c) Verify that any connections are checked for continuity value.

d) Verify that, as far as feasible, arcing tips and arc-control devices are inspected to ensure that they are securely fastened, correctly adjusted, and electrically connected.

e) Verify that vent holes and contact orifices are in their correct positions relative to the contact system when arc control devices are being refitted.

f) Verify that all adjustments are performed only in accordance with the manufacturer's instructions.

16.8.3.4 Venting, gas seals, and breathers

Verify that the venting system is checked to ensure that a free passage for oil and gases exists. Where a joint exists between fixed and movable portions of the gear, verify that it is in sound

 Copyright © 2001 IEEE. All rights reserved.

Copyright The Institute of Electrical and Electronics Engineers, Inc.
Provided by IHS under license with IEEE
No reproduction or networking permitted without license from IHS Not for Resale

condition. Verify that in no circumstances are the vents to be made larger than the design allows.

Verify that the condition of dehydrating agents if incorporated in breathers is checked.

16.8.3.5 Mechanisms

The guidance in 16.7.5.2.7 applies to the examination and overhaul of mechanisms with the following additional item: Uncontrolled closing or opening operations with the tank removed or empty of oil are undesirable unless the manufacturer's instructions specifically indicate otherwise.

16.8.3.6 Interpole linkages

a) Interpole linkages usually have carefully fitted linkage pins and minimum backlash mechanisms. Verify that these features are examined and adjusted, as required, to ensure minimum spread of timing between poles. Any deterioration in this respect is usually indicated in the timing test.

b) Verify that the manufacturer's instructions for the setting dimensions of the interpole linkages are followed, that all nuts and bolts are tight, and that all pivot pins secure.

c) Verify that all mounting hardware is tight and all pivot pins are secure.

d) On circuit breakers fitted with mechanical intertripping between poles, verify that the correct function is checked by initiating operations (i.e., close, open) of each pole in turn and ensuring that in each case the remaining two poles follow suit.

NOTE—Verify that interpole linkages are not altered unless essential adjustments are required per the manufacturer's instructions.

16.8.3.7 Dashpots associated with interpole linkages

a) Malfunction of dashpots associated with interpole linkages is usually indicated only by a travel record during the timing test. Unless such a record is available and indicates satisfactory operation, verify that the dashpots are carefully inspected.

b) For oil dashpots, verify that the oil level is correct.

c) For air dashpots, verify that bleed holes are not blocked and that clearances are satisfactory.

16.8.3.8 Insulating oil

(See also 16.5.3.)

a) *Testing and sampling*. Verify that a representative sample of oil is taken and tested every 6 mo. Oil sampling procedures should adhere to the manufacturer's procedures. Caution is required when sampling equipment that is energized. Change or filter the oil if necessary. Verify that oil which does not comply with the prescribed tests is

Copyright © 2001 IEEE. All rights reserved.

Copyright The Institute of Electrical and Electronics Engineers, Inc.
Provided by IHS under license with IEEE
No reproduction or networking permitted without license from IHS
Not for Resale

replaced with oil meeting the required standard. Verify that the oil level is maintained to the prescribed level (see ASTM STP 998 and NEMA SG 4-1990).

In addition to this routine maintenance, regular inspections (where feasible) should be made of oil levels.

b) *Replacement of oil*. Verify that the oil is removed at least once a year, as adjusted by experience and the results of the oil analysis, and that the tank (or tanks) and other parts that have been in contact with the oil (e.g., liners, bushings, lift rods, guides) are thoroughly cleaned. The tank interior and surfaces of conductors and insulators should be kept free from carbon, fibers, and moisture as contamination lowers the dielectric strength of the oil. Prior to filling switchgear tanks with oil, a good practice is to first rinse the interior of the tank and the immersed parts with clean oil (see NEMA SG 4-1990).

Filter the oil after successive openings under load, short-circuit, and such if it shows carbonization or if its dielectric strength is lowered because of dirt or suspended matter. Test the oil before replacing it in the tank. Do not allow moisture to come into contact with the oil during filtering.

Verify that as little aeration of the oil as possible occurs while filling of the tank, and as good practice, to fill from the bottom of the tank. Verify that a standing time is allowed after the tank is filled before commissioning the equipment. Verify that hot oil is not used to fill switchgear because of possible damage due to thermal stresses and risk of condensation of moisture on cooling.

Verify that, if drying out insulation is necessary, the oil in the tank is circulated and heated to gradually bring it up to the required temperature.

16.8.3.9 Tank and tank linings

a) Verify that tank linings are inspected for evidence of burning or other damage. Pay special attention to the edges for signs of laminate separation, which often indicates the presence of moisture. Damp or damaged linings require reconditioning or replacement as necessary.

Verify that the linings are not refitted until the tank has been thoroughly cleaned and dried.

b) Verify that gaskets are inspected and replaced where necessary.

c) Verify that special care is taken to avoid damage to interpole barriers when replacing tanks.

d) Verify that all tank bolts are properly tightened in the correct sequence.

16.8.3.10 Tank-lifting mechanism

Where the tank-lifting mechanism is integral with the switchgear, verify that the rope (where fitted) and operating mechanism are inspected for wear, corrosion, and freedom of moving parts. Perform this inspection before attempting to lower the tank.

Verify that the lifting mechanism is lubricated sparingly and hydraulic systems topped up as necessary.

 Copyright © 2001 IEEE. All rights reserved.

Copyright The Institute of Electrical and Electronics Engineers, Inc.
Provided by IHS under license with IEEE
No reproduction or networking permitted without license from IHS Not for Resale

16.8.4 Post-fault maintenance

16.8.4.1 Isolation of drawout metal-clad switchgear

Verify that the isolation of drawout metal-clad switchgear with oil circuit breakers is delayed for at least 10 min after operation on a fault to allow for the dispersal of any ignitable gases.

16.8.4.2 Insulating oil

If the oil is badly discolored or shows evidence of carbon particles in suspension, it may require changing in accordance with 16.8.3.8.

16.8.4.3 Joints and seals

Verify that all joints and seals (including cemented joints) are inspected for tightness and that particular attention is paid to tank gaskets where these are fitted.

16.8.4.4 General mechanical inspection

A general inspection for mechanical damage or distortion of the general structure and mechanism, both internal and external to the tank, is advisable. Verify that the switchgear is closed and tripped [see also 16.8.2 c)].

16.8.5 Summary of maintenance operations

The maintenance operations recommended for oil switchgear are summarized in Table 16-3. A reference to a clause number in the columns indicates the appropriate maintenance operation.

Table 16-3—Maintenance operations for oil switchgear

Maintenance operation	Premaintenance requirements	Routine maintenance		Post-fault maintenance
		Inspection	Examination and overhaul	
Safety of personnel	16.7.1.1			
Equipment to be rendered inoperative	16.7.1.2			
Precautions for oil switchgear	16.8.2			
Diagnostic testing		16.7.3	16.7.3	
Operational check		16.7.4	16.7.4	16.7.4
General inspection		16.7.5.1.1	16.7.5.1.1	

Copyright © 2001 IEEE. All rights reserved.

Copyright The Institute of Electrical and Electronics Engineers, Inc.
Provided by IHS under license with IEEE
No reproduction or networking permitted without license from IHS
Not for Resale

Table 16-3—Maintenance operations for oil switchgear (*Continued*)

Maintenance operation	Premaintenance requirements	Routine maintenance		Post-fault maintenance
		Inspection	Examination and overhaul	
Cleaning			16.8.3.1	16.7.6
Insulation		16.8.3.2	16.8.3.2	
Enclosures		16.7.5.2.4	16.7.5.2.4	
Contacts			16.7.5.2.5	16.7.6
Arc-control devices			16.8.3.3	16.7.6
Isolating contacts				
Venting and gas seals		16.8.3.4	16.8.3.4	16.8.4
Mechanisms			16.8.3.5	16.8.4.4
Auxiliary switches			16.7.5.2.8	
Indicating devices and interlocks			16.7.5.2.8	
Overload devices and protective relays		16.13	16.13	
Instrument and protective transformers			16.12 and 16.13	
Control relays or contactors			16.7.5.2.12	
Insulating oil			16.8.3.8	16.8.4.2
Tank and tank linings			16.8.3.9	16.8.4.4
Tank lifting mechanism		16.8.3.10	16.8.3.10	
Connections			16.7.5.2.13	
Secondary wiring and fuses		16.7.5.2.14	16.7.5.2.14	
Heaters			16.7.5.2.15	
Isolators and grounding switches		16.7.5.2.16	16.7.5.2.16	
Shutters			16.7.5.2.17	
Switchgear disconnects		16.7.5.2.18	16.7.5.2.18	
Bus bar and bus bar compartments			16.7.5.2.19	

Copyright © 2001 IEEE. All rights reserved.

--`,,`,,`,`,,`,,`,`,,---

Copyright The Institute of Electrical and Electronics Engineers, Inc.
Provided by IHS under license with IEEE
No reproduction or networking permitted without license from IHS Not for Resale

Table 16-3—Maintenance operations for oil switchgear (*Continued*)

Maintenance operation	Premaintenance requirements	Routine maintenance		Post-fault maintenance
		Inspection	Examination and overhaul	
Weather shields			16.7.5.2.20	
High-voltage fuse connections and associated linkage		16.7.8	16.7.8	
Final verification		16.7.5.2.21	16.7.5.2.21	16.7.5.2.21
Auxiliary equipment		16.12	16.12	

[a]The numbers quoted in the columns refer to the appropriate clause numbers in this recommended practice.

16.9 Maintenance of vacuum circuit breaker switchgear

16.9.1 Application of section

The guidance in 16.7 applies to the maintenance of vacuum circuit breaker switchgear with the additions and modifications given in 16.9.2 through 16.9.5.

16.9.2 General

Because of the sealed nature of the vacuum interrupter itself, carrying out any preventive or corrective maintenance on it is not possible. Certain tests can, however, be carried out to obtain information on the condition of the interrupter; and correct maintenance of the associated mechanism and components ensures that the life of the interrupter is not unduly affected by external factors.

16.9.3 Frequency of maintenance

The guidance in 16.5 applies to the frequency of maintenance for vacuum circuit breaker switchgear with the following addition: When determining the frequency of maintenance, consider the results of comprehensive diagnostic testing (see 16.7.3) and the record of the number of operations and current levels interrupted.

In addition, verify that operational checks are performed at regular intervals irrespective of service history.

NOTE—The interval that can be allowed between consecutive overhauls of vacuum circuit breaker switchgear depends upon the circuits controlled (e.g., load current, available fault duty) and the history and performance of individual designs of equipment.

Copyright © 2001 IEEE. All rights reserved.

Copyright The Institute of Electrical and Electronics Engineers, Inc.
Provided by IHS under license with IEEE
No reproduction or networking permitted without license from IHS
Not for Resale

16.9.4 Routine maintenance, examination, and overhaul

The guidance in 16.7.5 applies to the routine maintenance of vacuum circuit breaker switchgear with the additions and modifications for examinations and overhauls given in 16.9.4.1 through 16.9.4.4.

16.9.4.1 Opening device (or trip)

Immediately prior to commencing work, verify that the circuit breaker is opened by the electrically operated opening release coils, if fitted, or by the manual operation of the trip plunger.

When maintenance opening or closing devices are in use, verify that the manufacturer's advice on the operation of the circuit breaker is closely followed.

NOTE—Verify that care is taken to ensure that all stored energy devices are discharged or rendered inoperative.

16.9.4.2 Equipment enclosures

Refer to 16.6.4.2.4.

16.9.4.3 Mechanisms

The guidance in 16.7.5.2.7 applies to the examination and overhaul of mechanisms with the following additions:

a) *Examination and testing*. Verify that the main mechanism is examined and the setting dimensions verified. Malfunction is usually revealed by diagnostic tests and discrepancies in the setting dimensions.

b) *Correct damping*. Verify the correct damping of vacuum circuit breakers to minimize bounce on closing and to ensure that rebound on opening is not excessive.

16.9.4.4 Vacuum interrupter

Verify that contact erosion is checked as recommended by the manufacturer. (See 16.9.2.)

NOTE—Verify that to check contact force, the manufacturer's recommendation is followed. Verify that the integrity of the vacuum is checked by a high-voltage ac withstand test (e.g., high-potential test across the open contact). However, consult the manufacturer for suitable test voltage levels as precautions may be necessary to ensure that the levels of X-radiation possibly emitted during these tests are within safe limits.

Where more than one interrupter per pole exists, verify that the inter-interrupter-operating mechanism is inspected for synchronized operation. Verify that this mechanism does not slack or allow bounce of the contacts on opening.

 Copyright © 2001 IEEE. All rights reserved.

Copyright The Institute of Electrical and Electronics Engineers, Inc.
Provided by IHS under license with IEEE
No reproduction or networking permitted without license from IHS Not for Resale

16.9.5 Post-fault maintenance

Vacuum circuit breaker switchgear ordinarily is capable of performing its rated operating duty at the rated voltage level before examination or minor overhaul is necessary. However, following fault operation, a good practice is to inspect a circuit breaker at the earliest convenient opportunity.

Verify that the following items are examined and, depending on the results of the examination or the manufacturer's recommendations, overhauled:

— Insulation (see 16.7.5.2.3)
— Isolating contacts (see 16.7.5.2.5)
— Vacuum interrupter (see 16.9.4.4)
— Isolating and grounding switches (see 16.7.5.2.16)
— Mechanisms (see 16.9.4.3)

Verify that, after examination and any overhaul, the circuit breaker is subjected to an operational check (see 16.7.4) and to any other relevant diagnostic tests.

16.9.6 Summary of maintenance operations

The maintenance operations recommended for vacuum circuit breaker switchgear are summarized in Table 16-4. A reference to a clause number in the columns indicates the appropriate maintenance operation.

Table 16-4—Maintenance operations for vacuum circuit breaker switchgear

Maintenance operation	Premaintenance requirements	Routine maintenance		Post-fault maintenance
		Inspection	Examination and overhaul	
Safety of personnel	16.7.1.1			
Equipment to be rendered inoperative	16.7.1.2			
Diagnostic testing			16.7.3	16.7.3
Operational check		16.7.4	16.7.4	16.7.4
General inspection		16.7.5.1.1	16.7.5.1.1	
Cleaning			16.7.5.2.2	16.7.5.2.2
Opening device (trip)	16.9.4.4	16.9.4.1	16.9.4.1	
Insulation		16.7.5.2.3	16.7.5.2.3	16.7.6
Enclosures			16.9.4.2	

Copyright © 2001 IEEE. All rights reserved.

Copyright The Institute of Electrical and Electronics Engineers, Inc.
Provided by IHS under license with IEEE
No reproduction or networking permitted without license from IHS
Not for Resale

Table 16-4—Maintenance operations for vacuum circuit breaker switchgear (*Continued*)

Maintenance operation	Premaintenance requirements	Routine maintenance		Post-fault maintenance
		Inspection	Examination and overhaul	
Connections			16.7.5.2.13	
Secondary wiring and fuses			16.7.5.2.14	
Mechanisms			16.9.4.3	16.9.5
Auxiliary switches			16.7.5.2.8	
Indicating devices and interlocks			16.7.5.2.8	
Isolating contacts				
Shutters			16.7.5.2.17	
Switchgear disconnects			16.7.5.2.18	16.7.5.2.18
Vacuum interrupter			16.9.4.4	16.9.4.4
Isolators and grounding switches			16.7.5.2.16	16.7.5.2.16
Overload devices and protective relays		16.13	16.13	
Instruments and protective transformers			16.12 and 16.13	
Control relays or contactors			16.7.5.2.12	
Bus bars and bus bar enclosures			16.7.5.2.19	
Final verification		16.7.5.2.21	16.7.5.2.21	16.7.5.2.21
Auxiliary equipment		16.12	16.12	

[a]The numbers quoted in the columns refer to the appropriate clause numbers in this recommended practice.

Copyright © 2001 IEEE. All rights reserved.

Copyright The Institute of Electrical and Electronics Engineers, Inc.
Provided by IHS under license with IEEE
No reproduction or networking permitted without license from IHS Not for Resale

16.10 Maintenance of sulfur hexafluoride (SF_6) circuit breaker and load-interrupter switchgear

16.10.1 Application of section

The guidance in 16.7 applies to the maintenance of SF_6 circuit breaker and load-interrupter switchgear with the additions and modifications given in 16.10.2 through 16.10.6.

16.10.2 Special considerations arising from use of SF_6

16.10.2.1 Properties of SF_6

SF_6 in its pure state is a colorless, odorless, tasteless, nontoxic gas, which is heavier than air and has good dielectric and arc-extinguishing properties. It may be used for both main insulation and arc-extinguishing.

16.10.2.2 Switchgear

In general for medium-voltage equipment, SF_6 is used in a sealed tank (for load-interrupter switches) or in three sealed interrupter poles for circuit breakers.

16.10.2.3 Reserved

16.10.2.4 Warnings to personnel

All personnel entering a substation containing SF_6 equipment should be acquainted with the following:

a) SF_6 is about five times as dense as air. The potential hazard is that equipment, trenches and similar enclosed spaces may remain full of the gas. Therefore, the following warning should be heeded:

WARNING

Although uncontaminated SF_6 is nontoxic, it will not support life. Unprotected personnel entering an SF_6-filled enclosure, trench, etc., will be asphyxiated. Personnel shall be made aware of this danger, and equipment shall be adequately ventilated. If the presence of SF_6 is suspected, determine that presence and the concentration of SF_6 by the use of an SF_6 detector.

b) Although uncontaminated SF_6 is nontoxic, some of the gaseous impurities produced by electrical breakdowns (e.g., arcing in the gas) are toxic if inhaled in sufficient quantity. The solid fluoride powders, also produced by breakdown, may produce skin irritation. The presence of breakdown products is indicated by a pungent or unpleasant odor. These warning signs occur within seconds. If a pungent or unpleasant odor appears, personnel should quickly get into fresh air.

Copyright © 2001 IEEE. All rights reserved.

Copyright The Institute of Electrical and Electronics Engineers, Inc.
Provided by IHS under license with IEEE
No reproduction or networking permitted without license from IHS
Not for Resale

16.10.3 Operational checks

Perform operational checks of the SF_6 by observing the gas pressure gauge to monitor the pressure. The gas pressure gauge may also be equipped with alarm contacts or a solenoid to prevent operation at reduced pressures. Leak detectors may also be installed that are sensitive to SF_6.

16.10.4 Frequency of maintenance

The guidance in 16.7.2 applies to the frequency of maintenance for SF_6 circuit breaker and load-interrupter switchgear with the addition of the following factors:

a) To determine the frequency of maintenance, consider the results of comprehensive diagnostic techniques (see 16.7.3) and the record of the number of operations and values of current interrupted.

b) In addition, verify that operational checks are performed at regular intervals irrespective of service history.

c) For all SF_6 equipment, whatever its class of duty, verify that inspections occur at intervals not exceeding 1 y in order to determine whether any further maintenance is necessary and or gas is leaking.

d) Reserved.

e) The interval that can be allowed between overhauls depends upon the operating conditions of the circuits controlled and the history and performance of individual designs of equipment.

16.10.5 Routine maintenance

The guidance in 16.7.5 applies to the routine maintenance of SF_6 circuit breaker and load-interrupter switchgear with the addition that all testing and maintenance should be referred to the manufacturer's authorized service personnel.

16.10.6 Post-fault maintenance

The SF_6 equipment is normally capable of performing its rated operating duty at the rated voltage level before examination or minor overhaul is necessary. However, following fault operation, a good practice is to inspect a circuit breaker at the earliest convenient opportunity.

Verify that the following items are examined by the manufacturer's authorized service personnel and, depending on the results of the examination or the manufacturer's recommendation, overhauled:

— Insulation
— Interrupters

The mechanism should be examined also.

Copyright © 2001 IEEE. All rights reserved.

Copyright The Institute of Electrical and Electronics Engineers, Inc.
Provided by IHS under license with IEEE
No reproduction or networking permitted without license from IHS Not for Resale

After examination and any overhaul, the circuit breaker should be subjected to an operational check and any other relevant diagnostic tests by the manufacturer's authorized service personnel.

16.10.7 Summary of maintenance operations

The maintenance operations recommended for SF_6 circuit breaker and load-interrupter switchgear are summarized in Table 16-5. A reference to a clause number in the columns indicates the appropriate maintenance operation.

Table 16-5—Maintenance operations for SF_6 circuit breaker switchgear

Maintenance operation	Premaintenance requirements	Routine maintenance		Post-fault maintenance
		Inspection	Examination and overhaul	
Safety of personnel	16.10.2 and 16.10.3			
Equipment to be rendered inoperative	16.7.1.2 and 16.10.5			
Diagnostic testing				
Operational check		16.10.3	16.7.4	16.7.5
General inspection		16.10.5	16.7.5.1.1	
Cleaning				
Opening device		b	b	
Enclosures			16.7.5.2.4	
SF_6 gas		b	b	b
Insulation				
Local control panels		b	b	
Pressure gauges			b	
Pressure switches			b	
Connections			16.7.5.2.13	
Secondary wiring and fuses			16.7.5.2.14	

Copyright © 2001 IEEE. All rights reserved.

--`,,--`,,`,,`,,`,,`---

Copyright The Institute of Electrical and Electronics Engineers, Inc.
Provided by IHS under license with IEEE
No reproduction or networking permitted without license from IHS
Not for Resale

Table 16-5—Maintenance operations for SF_6 circuit breaker switchgear (*Continued*)

Maintenance operation	Premaintenance requirements	Routine maintenance		Post-fault maintenance
		Inspection	Examination and overhaul	
Interpole linkages				
Mechanisms				
Auxiliary switches			16.7.5.2.8	
Indicating devices and interlocks			16.7.5.2.8	
Interrupters			[b]	[b]
Isolators and grounding switches		16.7.5.2.16	16.7.5.2.16	
Overload devices and protective relays		16.13	16.13	
Instrument and protective transformers			16.12 and 16.13	
Control relays or contactors			16.7.5.2.12	
Bus bars and bus bar compartments			16.7.5.2.19	
Final verification		[b]	[b]	[b]
Auxiliary equipment		16.12	16.12	[b]

[a]The numbers quoted in the columns refer to the appropriate clause numbers in this recommended practice.
[b]Refer testing and maintenance to manufacturers' authorized service personnel.

16.11 Diagnostic testing

16.11.1 General

Where practicable, verify that the maximum use is made of diagnostic testing techniques to indicate the condition of the equipment and to prolong the intervals between dismantling.

Records of all diagnostic tests should be kept so that comparisons can be made and trends estimated; lists alone (e.g., checklists), which indicate only that measurements have been taken, are not sufficient.

Copyright © 2001 IEEE. All rights reserved.

Copyright The Institute of Electrical and Electronics Engineers, Inc.
Provided by IHS under license with IEEE
No reproduction or networking permitted without license from IHS Not for Resale

By comparison with previous similar tests, diagnostic tests provide guidance to possible deterioration and may indicate a need to vary maintenance intervals under particular service conditions.

Commonly used diagnostic tests are briefly described in 16.11.2 through 16.11.4, and Table 16-6 indicates the applicability of the tests to the various types of switchgear.

16.11.2 Diagnostic tests for correct operation

16.11.2.1 Time-travel test

The time-travel test provides a record of moving contact travel with respect to time during opening and closing operations on certain circuit breakers.

16.11.2.2 Timing test

Timing tests are generally carried out using multichannel apparatus. Sequence tests (e.g., close, open, and close-and-open operations) should be performed, and the time from initiation (i.e., energization of coils) to the operation of the contacts should be recorded.

Consider timing of auxiliary switches.

Verify that the timing tests are arranged so that the number of operations given to the circuit breaker is kept to a minimum, consistent with the number of timing channels available and the information required from a particular test. Comparisons between poles are important. Verify that tolerances, where specified by the manufacturer, are strictly followed.

Verify that sequence timing tests are performed at 100% of the rated voltage of operating coils or at the specified minimum operating voltage.

16.11.2.3 Operating voltages

The measurement of minimum operating voltages of both closing and tripping functions or operations at specified percentages of normal operating voltages, as given in the relevant equipment standard, is recommended. Sluggish operation at reduced voltage may give an early indication of mechanism deterioration.

NOTE—Verify that the magnitude of the minimum supply voltage is measured with current flowing, at the terminals of the operating mechanism, as stated in Table 9 of ANSI C37.06 and Table 23 of ANSI C37.16.

Performing operating voltage tests in conjunction with time-travel or timing tests is recommended.

Copyright © 2001 IEEE. All rights reserved.

--`,,---`,,`,,`,`,,`---
Copyright The Institute of Electrical and Electronics Engineers, Inc.
Provided by IHS under license with IEEE
No reproduction or networking permitted without license from IHS
Not for Resale

Table 16-6—Applicability of diagnostic tests[a]

1 Test	2 Switchgear up to 1000 V ac and 1200 V dc	3 Air circuit breakers intended for operation at voltages above 1000 V ac and 1200 V dc	4 Oil switchgear	5 Reserved	6 Vacuum circuit breaker switchgear	7 Sulfur hexafluoride circuit breaker switchgear
Operation						
Time-travel test	16.11.2.1	16.11.2.1			16.11.2.2	
Time test		16.11.2.2				16.11.2.2
Operating voltages		16.11.2.3	16.11.2.3		16.11.2.3	16.11.2.3
Reserved						
Reserved						
Reserved						
Contacts and connections	16.11.3.1	16.11.3.1	16.11.3.1		16.11.3.1	16.11.3.1
Resistance tests						
Infrared detection					16.11.3.2 (as applicable)	
Insulation						
High-potential tests						
Insulation resistance	16.11.4.1	16.11.4.1	16.11.4.1		16.11.4.1	16.11.4.1
Dielectric			16.11.4.3 (as applicable)			
Reserved						
Air quality						
Vacuum integrity					16.11.4.6	

[a]A reference to the clause number in Column 2 through Column 7 indicates that this test is appropriate.

Copyright © 2001 IEEE. All rights reserved.

--`,,`-`-`,,`,,`,`,,`---

Copyright The Institute of Electrical and Electronics Engineers, Inc.
Provided by IHS under license with IEEE
No reproduction or networking permitted without license from IHS Not for Resale

16.11.2.4 Reserved

16.11.2.5 Reserved

16.11.2.6 Reserved

16.11.3 Diagnostic tests for contacts and connections

16.11.3.1 Resistance tests of circuit breakers

Verify that millivolt drop or resistance tests are performed, where possible, across each complete pole and across individual series-connected components to detect any deterioration in contacts and connections (see NFPA 70B-1998).

For larger circuit breakers, a dc of no less than 100 A is recommended for low-resistance measurements.

Verify that these values are recorded and compared with measurements taken during the manufacturer's production tests.

16.11.3.2 Infrared detection: outdoor substations

The temperatures of exposed contacts and connections can be determined by instruments using noncontact detection techniques (see NFPA 70B-1998).

These instruments are particularly useful for scanning contacts and connections in outdoor substations, without de-energization, and for detecting excessive temperature rise due to arcing or deterioration of the contacts and connections. When possible, these tests are performed with high levels of current.

16.11.4 Diagnostic tests for insulation

Insulation tests can give useful information provided that they are carefully performed. Nonorganic insulation is not generally subject to degradation, but in some cases the internal surfaces may become contaminated. The tests are particularly useful for organic insulation.

Where these tests are performed, records should be kept so that changes and trends can be established. (See also 16.14.)

16.11.4.1 High-potential tests and insulation-resistance tests

16.11.4.1.1 Determination

The quality of the insulation can be determined by measuring the insulation resistance (except for in-air insulated equipment), and the leakage current between all live parts and ground can be determined by use of suitable test equipment.

Copyright © 2001 IEEE. All rights reserved.

Copyright The Institute of Electrical and Electronics Engineers, Inc.
Provided by IHS under license with IEEE
No reproduction or networking permitted without license from IHS
Not for Resale

The high-potential test for measuring the insulation strength, also called the dielectric voltage withstand test, is used for higher voltage insulation systems. The ac high-potential test subjects the insulation to the type of ac heat-conductive stress the switchgear is required to withstand in service. Where ac high-potential test equipment is unavailable, ANSI values of equivalent dc test voltages may be used.

WARNING

Do not conduct dc high-potential tests on switchgear unless the manufacturer approves and then only with great care. Failure to consult with the manufacturer may result in severe personal injury or death and in substantial damage to the apparatus.

The dielectric voltage withstand test determines the ability of the insulating materials and spacings used to withstand overvoltage without flashover or breakdown under specified conditions. Dielectric test sets have a separate ammeter and voltmeter. The higher potential voltage applied across the insulation produces a leakage current. Leakage current is plotted against applied test voltage to indicate the condition of the primary insulation system.

The dc insulation-resistance test performed with a megohmmeter indicates low-voltage withstandability.

Due to numerous parallel paths in complex apparatus, an insulation-resistance test performed with a megohmmeter is not a reliable indicator of high-voltage insulation quality.

16.11.4.1.2 Applied voltages for insulation-resistance tests (except for in-air insulated equipment)

16.11.4.1.2.1 Testing

The applied voltage for the insulation-resistance test is measured by applying a dc at one of the following voltages:

a) As specified by the manufacturer, or
b) Where the rated voltage of the equipment does not exceed 250 V between conductors and ground: 500 V, or
c) In other cases: 1000 V

Insulation-resistance tests are recommended to be done prior to energizing motor control centers (MCCs), switchboards, panelboards, and switchgear.

Insulation-resistance tests should also be performed as follows:

- For MCCs, panelboards, and switchboards
  - If a severe short-circuit has occurred inside the equipment
  - If parts have been replaced or insulating surfaces have been cleaned
  - If the equipment has been exposed to high humidity, condensation, or dripping moisture

 Copyright © 2001 IEEE. All rights reserved.

Copyright The Institute of Electrical and Electronics Engineers, Inc.
Provided by IHS under license with IEEE
No reproduction or networking permitted without license from IHS Not for Resale

CAUTION

Disconnect voltage transformers (VTs) for the testing. Short current transformer (CTs) secondaries. CT secondaries are not to be opened while the primary is energized until the secondary has been shorted, either at the switch or elsewhere in the secondary circuit.

- For switchgear
  - Before conducting any high-potential test
  - After conducting any high-potential test

16.11.4.1.2.2 Insulation analysis

When a dc test voltage is applied to a typical insulation system, three types of current flow exist:

- The capacitance or charging current
- The absorption current
- The conduction or leakage current

The charging current is large at first and decays over time as the insulation is charged to the test voltage.

The absorption current also decays over time and is caused by polarizations within the insulation system.

The leakage current, which flows through the insulation and over the surface, is generally the value sought when measuring insulation resistance.

Conventional insulation testers measure the algebraic sum of all these currents and indicate megohms derived from the applied test voltage divided by the current flow. This apparent insulation resistance changes slowly with time. Measurement of the true insulation resistance occurs only when the reading eventually stabilizes. By then, the absorption and charging currents have decayed to zero, and only the leakage current is being measured.

To compensate for this time dependence, several testing techniques have been developed over the years to estimate true insulation resistance. These techniques are subject to interpretation and provide only an approximation of true insulation resistance.

High-range (megohm) insulation-resistance analyzers with microprocessor control calculate true insulation resistance after a 10 min test period.

The insulation testing techniques include the following:

a) *Short-time or spot-reading test*. The 60 s (recommended) or 30 s test period of a short-time or spot-reading test provides a point on the curve of resistance versus time. “For many years one megohm has been widely used as a fair allowable lower limit

Copyright © 2001 IEEE. All rights reserved.

Copyright The Institute of Electrical and Electronics Engineers, Inc.
Provided by IHS under license with IEEE
No reproduction or networking permitted without license from IHS
Not for Resale

for insulation resistance of ordinary industrial electrical equipment rated up to 1000 V. For equipment rated above 1000 V the one megohm rule is usually stated as a minimum of one megohm per thousand volts" (see AVO Biddle Instruments Bulletin 21-P8b [B9]). Consult with the equipment manufacturer for "the minimum values of insulation resistance that are based on the kind of insulating material used and the electrical and physical dimensions of the types of equipment under consideration" (see AVO Biddle Instruments Bulletin 21-P8b [B9]).

b) *Time-resistance method*. The time-resistance test (also known as an absorption test) is a 1 min to 5 min or 10 min (recommended) period where resistances are recorded at specific intervals. Good insulation is indicated by a continual increase in resistance.

c) *Dielectric absorption ratio*. The ratio of two time-resistance measurements (e.g., a 60 s value divided by the 30 s value) is known as the dielectric absorption ratio.

d) *Polarization index*. The specific ratio of two time-resistance measurements (i.e., the 10 min value divided by the 1 min value) is known as the polarization index.

e) *Step-voltage method*. The step-voltage method uses a multivoltage megohm meter to apply two or more voltages in steps (e.g., 500 V dc, then 1000 V dc; in 500 V increments to 2500 V dc, depending upon the equipment voltage rating). Good insulation is indicated by relatively constant or upward sloping curves of resistance as opposed to a sharp decline. The duration of the applied voltage at each step is 60 s.

16.11.4.1.3 Applied voltages for switchgear high-potential tests

16.11.4.1.3.1 General

The voltage that should be applied to primary insulation when making high-potential insulation-resistance tests varies according to the voltage rating of the switchgear. Table 16-7 provides a guide to test voltages. The insulation resistance of small wiring and ancillary components should be tested at a dc voltage not exceeding 500 V.

CAUTION

The insulation level rating of ac switchboards, panelboards, and MCCs having a given voltage rating is twice the rated voltage plus 1000 V. The NEC standards have no provision for high-potential field testing of these types of equipment; therefore, it is not recommended (see NEMA PB 2.1-1996 [B64]).

DC tests are usually preferred over ac tests for making qualitative tests of insulation systems because the dc is a measure of the conduction or leakage current whereas an ac includes charging current and leakage current. DC dielectric tests also reveal incipient damage and surface corona discharges.

NOTE—Certain types of equipment (e.g., equipment incorporating semiconductors) may not be suitable for this test, and verification is required that this equipment is isolated.

Copyright © 2001 IEEE. All rights reserved.

Copyright The Institute of Electrical and Electronics Engineers, Inc.
Provided by IHS under license with IEEE
No reproduction or networking permitted without license from IHS
Not for Resale

16.11.4.1.3.2 Field dielectric tests

"When low-frequency withstand tests are to be made on switchgear after installation in the field, the switchgear shall not be tested at greater than 75% of the (design) test values," given in Table 16-7, according to the IEEE switchgear standards cited in the table.

NOTE—Field tests are recommended when new units are added to the existing installation or after major field modifications. Verify that the equipment is put in good condition prior to the field test. Equipment should not be subjected to these tests after it has been stored for long periods of time or has accumulated a large amount of dust, dirt, moisture, or other contaminants without first being restored to good condition.

If the equipment must be subjected to a high-potential test after maintenance, verify that consideration is given to performing tests at voltage levels below the levels specified for site commissioning tests.

16.11.4.2 Reserved

16.11.4.3 Precaution

Verify that voltage and control power transformers are disconnected prior to performing dielectric testing on the electrical equipment.

16.11.4.4 Reserved

16.11.4.5 Reserved

16.11.4.6 Vacuum integrity check

Refer to 16.9.4.4.

16.12 Maintenance of auxiliary items

16.12.1 Equipment for tripping and closing current supply

The equipment for the supply of current for tripping and closing gear should be kept in good condition.

16.12.2 General precautions for battery installations

16.12.2.1 Precautions to be taken in battery charging areas

As hydrogen is produced during battery charging, verify that smoking or the use of open flames is prohibited at all times in the immediate vicinity of battery installations.

Verify that precautions are also be taken to avoid causing sparks near the battery.

Copyright © 2001 IEEE. All rights reserved.

Copyright The Institute of Electrical and Electronics Engineers, Inc.
Provided by IHS under license with IEEE
No reproduction or networking permitted without license from IHS
Not for Resale

Table 16-7—AC voltage and insulation levels

Type of switchgear	Rated maximum voltage (kV)	Insulation levels (kV), low frequency withstand (rms)		Dc withstand test (reference[a]) (kV)	
		Design test	Field test	Design test	Field test
Metal-enclosed low-voltage (IEEE Std C37.20.1-1993)	0.254 0.508 0.635	2.2	1.6	3.1	2.3
Metal-clad and metal-enclosed interrupter (IEEE Std C37.20.2-1999)	4.76 8.25 15.0 38.0	19 36 36 80	14 27 27 60	27 50 50 —	20 37.5 37.5 —
Station-type cubicle (IEEE Std C37.20.3-2001)	15.5 38.0	50 80	37.5 27	— —	— —

[a]The column titled "DC withstand test" is given as a reference only when using dc tests to verify the integrity of connected cable installations without disconnecting the cables from the switchgear. It represents values believed to be appropriate and approximately equivalent to the corresponding power frequency withstand test values specified for each voltage rating of switchgear. The presence of this column in no way implies any requirement for a dc withstand test on ac equipment or that a dc withstand test represents an acceptable alternative to the low-frequency withstand tests specified in this recommended practice for design tests, production tests, conformance tests, or field tests. When making dc tests, the voltage should be raised to the test value in discrete steps and held for a period of 1 min (see IEEE Std C37.20.2-1999 and IEEE Std C37.20.3-1987).

Because of the variable voltage distribution encountered when making dc withstand tests, the manufacturer should be contacted for recommendations before applying dc withstand tests to the switchgear. VTs above 34.5 kV should be disconnected when testing with dc. (See IEEE Std C57.130-1978, Clause 8 and, in particular, 8.8.2, which reads "Periodic kenotron tests should not be applied to transformers of higher than 34.5 kV voltage rating." See also IEEE Std C37.20.2-1999 and IEEE Std C37.20.3-1987.)

Verify that adequate notices or warning signs are displayed in areas where hydrogen is produced.

16.12.2.2 Handling of electrolyte

When electrolyte is handled, verify that protective clothing and footwear are worn and special care is taken to avoid spillage on to the skin.

Where chemical burns are sustained, verify that the affected area is washed immediately with a copious supply of clean water and medical attention sought (see 16.3.3).

Copyright © 2001 IEEE. All rights reserved.

Copyright The Institute of Electrical and Electronics Engineers, Inc.
Provided by IHS under license with IEEE
No reproduction or networking permitted without license from IHS
Not for Resale

16.12.2.3 Mixing or contamination of electrolytes

Verify that separate battery instruments or tools are kept for lead-acid or alkaline batteries because any mixture with or contamination by an incorrect electrolyte may damage a battery.

16.12.3 Secondary cell batteries

16.12.3.1 General

16.12.3.1.1 Application

Secondary cell batteries (e.g., wet cells, gel cells, nickel-cadmium cells) may be used for supplying protection, control, and instrument circuits and may also supply indicator lights and provide emergency lighting.

16.12.3.1.2 Battery condition

Verify that secondary cell batteries are kept in a satisfactory state of charge and the condition and level of electrolyte regularly examined.

16.12.3.1.3 Indicator of battery condition

Where batteries are used solely for tripping, verify that they are provided with instrumentation so that a simple switching operation can reveal the state of the battery. Verify that the instrument includes a danger mark to indicate the critical condition.

16.12.3.1.4 Verification of correct operation of charging equipment

Verify regularly the correct operation of any continuously operating trickle-charging or constant voltage charging equipment (see NEMA PE 5-1985).

16.12.3.1.5 Periodic charge and discharge

Where periodic charge and discharge take place, particular attention is needed to guard against unusual drainage of the battery or overload of the charger.

16.12.3.1.6 Avoidance of damage to electronic equipment during boost charging and equalize charging

Care should be taken during boost charging and equalize charging to ensure that the terminal voltage does not cause damage to electronic equipment in the circuit. In this respect, it may be necessary to disconnect such equipment or alternatively to arrange for a circuit using diodes to suppress voltage at the load while applying boost voltage or equalize charging to the cells.

Copyright © 2001 IEEE. All rights reserved.

Copyright The Institute of Electrical and Electronics Engineers, Inc.
Provided by IHS under license with IEEE
No reproduction or networking permitted without license from IHS
Not for Resale

16.12.3.2 Routine maintenance

Verify that the following maintenance is performed on a routine basis (see IEEE Std 450-1995, IEEE Std 1106-1995, and IEEE Std 1188-1996):

a) Battery cells, where practicable, are inspected for shedding of active material, sedimentation, and buckling of the plates.

b) Cell voltage is measured while under charge.

c) Electrolyte specific gravity is measured.

NOTE—For alkaline cells, the specific gravity does not indicate the degree of charge.

d) The electrolyte level is inspected and, where necessary, topped up accurately to the correct level with distilled water.

e) The terminal posts are inspected for corrosion and tightness of the connections and, after cleaning as necessary, lightly greased with corrosion inhibitor.

f) The internal ohmic values of each cell or battery and the resistance of each intercell strap are measured.

16.12.3.3 Electrolyte condition

16.12.3.3.1 General

In all cases, the recommendations of the battery manufacturer are to be closely followed.

16.12.3.3.2 Stratification of the electrolyte

Under trickle-charging conditions, stratification of the electrolyte can occur. Therefore, at intervals not greater than 2 y or following a significant degree of topping up, the battery should be charged at a high rate for a short time after topping up, particularly where batteries are used for closing. Where trickle charging is performed, the battery should be given a periodic charge-discharge cycle or a boost charge.

16.12.3.4 Lead-acid batteries

For lead-acid batteries, special care should be taken to avoid unnecessary gassing charges as this tends to cause scaling and shedding of active materials and buckling of the plates. The life and reliability of a battery can be considerably reduced by incorrect rates and too frequent boost charging or equalize charging.

16.12.3.4.1 Valve-regulated lead-acid batteries

Valve-regulated lead-acid batteries can be surveyed on line by making an impedance test on each battery or cell and making a measurement of the resistance of each intercell connection to determine the cells or straps that need further attention by a load test or additional maintenance on the strap connection.

Copyright © 2001 IEEE. All rights reserved.

Copyright The Institute of Electrical and Electronics Engineers, Inc.
Provided by IHS under license with IEEE
No reproduction or networking permitted without license from IHS Not for Resale

16.12.3.5 Alkaline batteries

A discharge test is the only reliable method of checking the condition and capacity of alkaline batteries. Verify that such tests are performed every 4 y to 8 y. Several discharge-charge cycles may be required to restore an optimum capacity.

16.12.4 Primary cell batteries

Where batteries of primary cells (i.e., nonrechargeable cells) are used in place of secondary cell batteries for tripping circuits, verify that they are provided with a test instrument that readily indicates their condition. The maintenance of this type of cell is a simple inspection with replacement as required.

16.12.5 Reserved

16.12.6 CTs

16.12.6.1 Precautions

Before examination, verify that CTs are proved to be de-energized or dead or to be isolated and discharged to ground (or shorted-out). Dangerous voltage may result if the secondary circuit of a CT is opened with the primary circuit on load. Verify that any connection removed to carry out these or other tests is correctly replaced and securely tightened (see IEEE Std C57-13-1993).

16.12.6.2 CTs that are accessible

Where CTs are accessible, maintenance attention consists of a general inspection and verification that all main and secondary connections are tight.

Verify that all exposed insulation is cleaned and examined thoroughly for any damage, such as cracks and tracking marks.

16.12.6.3 Reserved

16.12.6.4 Reserved

16.12.6.5 CTs enclosed in metal-clad gear or otherwise inaccessible

CTs enclosed in metal-clad gear or otherwise inaccessible are usually safe against mechanical damage, and only electrical testing can determine whether they are in good order. An insulation-resistance and continuity test of the secondary winding is regarded as an essential minimum.

Copyright © 2001 IEEE. All rights reserved.

Copyright The Institute of Electrical and Electronics Engineers, Inc.
Provided by IHS under license with IEEE
No reproduction or networking permitted without license from IHS
Not for Resale

16.12.7 VTs

16.12.7.1 Precautions

Before examination, verify that VTs are be proved to be de-energized or dead or to be isolated and discharged to ground. Particular care should always be taken to ensure that a VT is not liable to be made live inadvertently due to a feedback via the secondary side (see Dec. 1987 *NIOSH Alert!*).

16.12.7.2 Maintenance, inspection, and verification

Maintenance as described in 16.12.6 for CTs is appropriate to VTs. In addition, verify that the isolating contacts of drawout VTs are cleaned, inspected for damage, and reconditioned as necessary. A film of contact lubricant should then be sparingly applied. Verify the correct operation of any safety shutters. Inspect and replace any blown fuses.

16.12.8 Equipment-grounding connections

Verify that all exposed grounding connections are inspected for signs of mechanical damage or corrosion. Perform a visual check of equipment grounds, including fence grounds on outdoor substations. Perform a ground resistance check to determine that the specified value of low resistance system ground is maintained.

16.12.9 Other auxiliary devices

16.12.9.1 Lifting devices

Verify that the maintenance of lifting devices is performed at regular intervals. In some types of switchgear, these devices form an integral part of the equipment and need to be dealt with during the maintenance of the equipment. Some lifting devices are portable and require separate maintenance. The manufacturer's recommendations should be sought and followed.

16.12.9.2 Oil handling plant

To ensure satisfactory service, the utmost care in handling the oil is essential. For oil handling, a good practice is to have a clean oil system and a dirty oil system, both of which are clearly marked.

Verify that where portable oil-handling equipment is used, the pipe work and pumps are carefully inspected to ensure that they are free from dirt and water and that they are carefully flushed with clean oil before use.

16.12.10 Replacement parts

Verify that an adequate supply of suitable replacement parts is available and that the parts are properly stored.

Copyright © 2001 IEEE. All rights reserved.

--`,,`,,`,,,,,,,,,,,---

Copyright The Institute of Electrical and Electronics Engineers, Inc.
Provided by IHS under license with IEEE
No reproduction or networking permitted without license from IHS Not for Resale

16.13 Maintenance of protective apparatus

16.13.1 General

When commissioning tests on protective apparatus are being performed, verify that detailed records of the results are made to provide a reference for comparison with future routine or post-fault tests. Verify that up-to-date records of fuses and fuse-link ratings and the correct settings of all protective relays are also maintained and that care is taken to restore the settings to their correct value if they are altered during tests. In addition to these records it is sometimes helpful to have the settings recorded in or on the relay case.

16.13.2 Removal of dust

Dust should be wiped or vacuumed from relay covers before the covers are removed, and these covers should be replaced securely to exclude dust.

16.13.3 Connections

If disturbing any connections or making temporary connections is necessary for testing, verify that these connections are correctly restored before the circuit breaker is returned to service.

WARNING

CT secondary circuits should never be open-circuited when the main circuit is energized. Extremely high and hazardous voltages may occur under open-circuit conditions.

16.13.4 Routine tripping tests

To avoid damage to the relay mechanism and contacts, the greatest care should be taken when carrying out routine tripping tests on circuit breakers by manipulation of the relay.

16.13.5 Protective apparatus incorporating semiconductors

When protective apparatus incorporating semiconductors or similar components is being voltage-tested, care should be taken that the test voltage level does not damage these components.

16.13.6 Injection tests

16.13.6.1 Primary injection

Testing by primary injection or by injection into test windings (if provided on the CT) is preferred, when conditions permit, over secondary injection, which may, however, be used for routine tests. Secondary injection testing at regular intervals is, however, of much greater value than primary injection tests carried out infrequently.

Copyright © 2001 IEEE. All rights reserved.

Copyright The Institute of Electrical and Electronics Engineers, Inc.
Provided by IHS under license with IEEE
No reproduction or networking permitted without license from IHS
Not for Resale

16.13.6.2 Secondary injection

Verify that secondary injection tests are performed using current injection devices suitable for the particular relay concerned or by test blocks forming part of the switchgear. The disconnection of small wiring in order to carry out tests is not recommended.

16.13.7 Relays

Verify that tests are made on protective relays to check the operating and re-setting times or pick-up and drop-out values as applicable.

Special test techniques may be required for static or electronic relays. Therefore, verify that the manufacturer's instructions are consulted.

Solid-state or electronic (e.g., integrated circuit, microprocessor) relays, with minimal numbers of moving parts, normally require no adjustments or other maintenance in the usual sense as, for example, checking contact wipe or clutch pressure.

Periodic tests are necessary to confirm proper operation.

Field testing may introduce many variables or errors due to various factors (e.g., nonsinusoidal wave shapes, waveform distortion, power source regulation, metering accuracy), which could prevent an accurate check of the system performance or calibration unless the test personnel are thoroughly familiar with proper techniques.

Field functional testing may consist of Go/No-Go testing to determine whether the devices are furnishing the protection for which they were installed.

CAUTION

Maintenance or functional testing may mean working with energized equipment, and care is required to avoid electric shock. Verify that only competent technicians familiar with good safety practices use these devices.

16.14 Maintenance and testing of insulation

16.14.1 General

Verify that the insulation of electrical switchgear is tested and the results recorded before the equipment is commissioned. During the life of electrical equipment, insulation-resistance testing gives a good indication of the condition of the equipment. If these tests are recorded, they can help in deciding maintenance requirements for the whole equipment (see IEEE Std 4-1995, IEEE Std 62-1995, and IEEE Std 957-1995).

Adequate precautions should be taken, and an access permit procedure should be used.

Copyright © 2001 IEEE. All rights reserved.

Copyright The Institute of Electrical and Electronics Engineers, Inc.
Provided by IHS under license with IEEE
No reproduction or networking permitted without license from IHS Not for Resale

16.14.2 Routine testing and inspection

16.14.2.1 Materials susceptible to deterioration

Insulation (e.g., synthetic resin bonded paper or fabric, impregnated or laminated wood) is particularly susceptible to the entrance of moisture, overheating, or tracking; and particular attention should be given to these materials.

16.14.2.2 Systematic testing and recording methods

Insulation-resistance measurements between poles and between poles and ground are the most suitable for routine tests; but, to facilitate their proper interpretation, systematic testing and recording methods are essential. Resistance tests are strictly comparative in that, for each item tested, a rejection value can only be fixed on the basis of experience, by comparison with earlier results. For this reason, verify that the test equipment and method used are the same on each occasion.

Test values should be logged on a standard form designed for recording such data. The humidity and temperature at the time of the test should also be recorded. In general, a steady fall of resistance over a period of time is a more reliable indication of deterioration than a relatively low value that remains reasonably constant.

16.14.2.3 Measurement of insulation power factor or dielectric dissipation factor tan delta

The measurement of the dielectric dissipation factor tan delta is a preferred method of verifying the quality of insulation when suitable test equipment is available and applicable (see IEEE Std 62-1995 and ASTM 10.01).

16.14.2.4 Lift rods

On lift rods on some circuit breakers (or on other long pieces of insulation), deterioration may not occur uniformly; and resistance measurements taken over the entire length may not reveal localized deterioration.

Verify that particular attention is given to the lift rods of circuit breakers where the rods are made of hickory or other natural wood. These inspections include looking for indications that the wood has opened along the grain and, where riveting is employed, that the wood has pulled out of the riveted end.

16.14.2.5 Ambient temperature

Where practicable, verify that the insulation to be tested is allowed to reach ambient temperature before resistance tests are made.

Copyright © 2001 IEEE. All rights reserved.

Copyright The Institute of Electrical and Electronics Engineers, Inc.
Provided by IHS under license with IEEE
No reproduction or networking permitted without license from IHS
Not for Resale

16.14.3 Reserved

16.14.4 Reserved

16.14.5 Laminated insulation

Laminated insulation may be susceptible to the entrance of moisture, particularly through the edges of the laminate. Tracking, which tends to commence at the sharp corners of adjacent metalwork and metal fixings, often occurs beneath the surface of the insulation and is indicated as a surface blister.

Delamination or cracking of the material may result in mechanical breakdown or may allow the entry of moisture or carbon with consequent electrical breakdown. High-voltage resistance testing and visual inspection should provide indication of the dielectric quality.

16.14.6 Porcelain insulation

Porcelain insulation does not deteriorate, but it may give low resistance readings under humid conditions. Careful interpretation of test results is necessary and a thorough visual inspection for cracks or other mechanical damage is as important as electrical tests. It is recommended that porcelain insulation be cleaned with a suitable industrial solvent to ensure removal of conducting films that are not always visible to the naked eye.

Consideration should be given to the renewal of antipollution grease where appropriate.

16.14.7 Applied voltages for insulation-resistance tests and for high-potential tests

The applied voltages for insulation-resistance tests and for high-potential tests are given in 16.11.4.1.2 and 16.11.4.1.3.

16.14.8 Power frequency withstand tests after maintenance

Power frequency withstand tests (or high-potential tests) conducted at the manufacturer's plant or on site during initial commissioning are done primarily to test the integrity of high-voltage insulation and to ensure no damage to insulation has occurred during assembly, transport, or erection of the switchgear. After a number of years in service, some forms of insulation may undergo a slow deterioration due to normal working stresses. This deterioration is greatly accelerated by the application of high ac stresses, which should be avoided when possible.

If subjecting the equipment to a high-potential test is necessary after maintenance, verify that consideration is given to carrying out tests at voltage levels below the levels specified for site commissioning tests.

Copyright © 2001 IEEE. All rights reserved.

Copyright The Institute of Electrical and Electronics Engineers, Inc.
Provided by IHS under license with IEEE
No reproduction or networking permitted without license from IHS Not for Resale

16.15 Maintenance of industrial molded-case circuit breakers (MCCBs)

16.15.1 Premaintenance requirements and precautions

16.15.1.1 Safety of personnel

To establish safe working conditions for maintenance of industrial MCCBs, the requirements given in 16.3 and 16.4 should be followed (see NEMA AB 4-1996).

16.15.1.2 Equipment to be rendered inoperative

WARNING

Hazard of severe electrical shock or burn exists when working in or around electrical equipment. Except where noted, inspection and maintenance steps should be made only on circuit breakers and equipment that are de-energized, disconnected, and isolated so that no accidental contact can be made with live parts.

16.15.1.3 Manufacturers' operation and maintenance instructions

Verify that the circuit breaker manufacturer's operation and maintenance instructions are read in conjunction with this clause.

16.15.1.4 Accessory parts

Circuit breakers may use only the manufacturer's authorized field installable accessories.

16.15.2 Frequency of maintenance

Experience shows that MCCBs require maintenance only for verification of environmental conditions of the installation and of the enclosure type used for the circumstances. When inspections identify an abnormal condition and indicate the possibility of damage, then performing certain maintenance steps may be necessary.

16.15.3 Routine inspection

16.15.3.1 General

The inspection practices in 16.15.3.2 and 16.15.3.3 are recommended.

16.15.3.2 Exposed face temperature check

16.15.3.2.1 Purpose

The purpose of checking the temperature on the insulated face (or cover) of the circuit breaker is to determine whether the temperature is excessive.

Copyright © 2001 IEEE. All rights reserved.

--`,,`-`-`,,`,,`,`,,`---

Copyright The Institute of Electrical and Electronics Engineers, Inc.
Provided by IHS under license with IEEE
No reproduction or networking permitted without license from IHS
Not for Resale

16.15.3.2.2 Results

Compare the temperature of individual circuit breakers with the temperature of other breakers in the installation. If a circuit breaker is considerably hotter than adjacent circuit breakers, investigate the cause.

16.15.3.3 Inspection of enclosure interior

16.15.3.3.1 Purpose

One purpose of inspecting the interior of a circuit breaker's enclosure is to evaluate the operating environment and the apparent condition of the circuit breaker's molded case. Another goal is to verify whether proper conductors have been used and whether any physical indication of overheating exists.

16.15.3.3.2 Results

An inspection of the circuit breaker should verify the following conditions:

a) The application is within its marked ratings.
b) The environment is free of contamination.
c) The molded-case surface is free of cracks.
d) The terminations are connected to conductors sized for the application (see UL 489).
e) The conductors are properly terminated and free of signs of overheating.

NOTES

1—If no evidence of looseness (e.g., overheating) exists, then the connections should remain undisturbed and at the tightness as found.

2—If evidence of overheating or arcing exists, an investigation of the cause should be made and corrective steps taken (see 16.15.4).

16.15.4 Preventative maintenance

16.15.4.1 General

Under normal conditions, properly applied MCCBs require maintenance only for verification of environmental conditions of the installation and of the enclosure type used for the circumstances. However, when inspections identify an abnormal condition and indicate the possibility of damage, performing certain maintenance steps may be necessary (see NEMA AB 4-1996).

16.15.4.2 Results

a) Verify that the circuit breaker is replaced when the circuit breaker jaws are pulled, discolored, or melted on surfaces that mate with connecting bus bars. Connecting bus

Copyright © 2001 IEEE. All rights reserved.

--`,,`-`-`,,`,,`,`,,`---

Copyright The Institute of Electrical and Electronics Engineers, Inc.
Provided by IHS under license with IEEE
No reproduction or networking permitted without license from IHS Not for Resale

bars showing these same characteristics also require replacement. If the bus bars are nonreplaceable, then the entire assembly requires replacement.

b) Verify that the circuit breaker enclosure is replaced with an enclosure type appropriate to the environment when the entry of contaminants cannot be prevented by the existing enclosure.

c) Overheated aluminum connectors should be replaced.

16.15.5 Summary of maintenance operations

The maintenance operations recommended for MCCBs are summarized in Table 16-8. A reference to a clause number in the columns indicates the appropriate maintenance operation.

Table 16-8—Maintenance operations for MCCBs

Maintenance operation	Premaintenance requirements	Preventative maintenance
Safety of personnel	16.15.1.1	
Equipment to be rendered inoperative	16.15.1.2	
Routine inspection		16.15.3
Exposed face temperature check		16.15.3.2
Enclosure interior		16.15.3.3
Preventative maintenance		16.15.4

16.16 References

This recommended practice shall be used in conjunction with the following standards. When the following standards are superseded by an approved revision, the revision shall apply.

ASC C2-2002, National Electrical Safety Code® (NESC®).[2]

ANSI Z244.1-1982, American National Standard for Personnel Protection: Lockout/Tagout of Energy Sources Minimum Safety Requirements.[3]

ASTM Special Technical Publication (STP) 998, Electrical Insulating Oils.[4]

[2]The NESC is available from the Institute of Electrical and Electronics Engineers, 445 Hoes Lane, P.O. Box 1331, Piscataway, NJ 08855-1331, USA (http://standards.ieee.org/).

[3]ANSI publications are available from the Sales Department, American National Standards Institute, 11 West 42nd Street, 13th Floor, New York, NY 10036, USA (http://www.ansi.org/).

[4]ASTM publications are available from the American Society for Testing and Materials, 100 Barr Harbor Drive, West Conshohocken, PA 19428-2959, USA (http://www.astm.org/).

Copyright © 2001 IEEE. All rights reserved.

Copyright The Institute of Electrical and Electronics Engineers, Inc.
Provided by IHS under license with IEEE
No reproduction or networking permitted without license from IHS
Not for Resale

ASTM Standards for Electrical Insulation and Electronics: v. 10.01 Electrical Insulation (1): Solids, Composites, and Coatings.

ASTM Standards for Electrical Protective Equipment for Workers, 7th ed.

ASTM E-849, Practice for Safety and Health Requirements Relating to Occupational Exposure to Asbestos.

ASTM F-855-90, Temporary Grounding Systems to be Used on De-energized Electric Power Lines and Equipment.

FM Technical Advisory Bulletin 5-20/14-22, Electrical Testing.[5]

IEEE Std 4-1995, IEEE Standard Techniques for High Voltage Testing.[6]

IEEE Std 62-1995, IEEE Guide for Diagnostic Field Testing Electric Power Apparatus.

IEEE Std 450-1995, IEEE Recommended Practice for Maintenance, Testing, and Replacement of Vented Lead Acid Batteries for Stationary Applications.

IEEE Std 493-1997, IEEE Recommended Practice for the Design of Reliable Industrial and Commercial Power Systems (*IEEE Gold Book*).

IEEE Std 510-1983, IEEE Recommended Practices for Safety in High-Voltage and High Power Testing.

IEEE Std 625-2001, IEEE Recommended Practice to Improve Electrical Maintenance and Safety in the Cement Industry.

IEEE Std 957-1995, IEEE Guide for Cleaning Insulators.

IEEE Std 978-1984, IEEE Guide for In-Service Maintenance and Testing of Live-Line Tools.

IEEE Std 1048-1990, IEEE Guide for Protective Grounding of Power Lines.

IEEE Std 1106-1995, IEEE Recommended Practice for Maintenance, Testing, and Replacement of Nickel-Cadmium Storage Batteries for Generating Stations and Substations.

IEEE Std 1188-1996, IEEE Recommended Practice for Maintenance, Testing, and Replacement of Valve Regulated Lead Acid Batteries.

IEEE Std C37.20.1-1993, IEEE Standard for Metal-Enclosed Low-Voltage Power Circuit Breaker Switchgear.

---

[5]FM Technical Advisory Bulletins can be obtained from Factory Mutual FM, Norwood, MA, USA.

[6]IEEE publications are available from the Institute of Electrical and Electronics Engineers, 445 Hoes Lane, P.O. Box 1331, Piscataway, NJ 08855-1331, USA (http://standards.ieee.org/).

 Copyright © 2001 IEEE. All rights reserved.

Copyright The Institute of Electrical and Electronics Engineers, Inc.
Provided by IHS under license with IEEE
No reproduction or networking permitted without license from IHS Not for Resale

IEEE Std C37.20.2-1999, IEEE Standard for Metal-Clad and Station-Type Cubicle Switchgear.

IEEE Std C37.20.3-2001, IEEE Standard for Metal-Enclosed Interrupter Switchgear.

ISO/IEC Guide 51, Guidelines for the inclusion of safety aspects in standards.[7]

NEMA AB 4-1996, Guidelines for Inspection and Preventive Maintenance of Molded Case Circuit Breakers Used in Commercial and Industrial Applications.[8]

NEMA PE 5-1985 (Reaff I991), Utility Type Battery Chargers.

NEMA SG 4-1990, Alternating-Current High-Voltage Circuit Breakers.

NFPA 70-1999, National Electrical Code® (NEC®).[9]

NFPA 70B-1998, Electrical Equipment Maintenance.[10]

NFPA 70E-2000, Electrical Safety Requirements for Employee Workplaces.

NIOSH Alert! Dec. 1986, *Preventing Fatalities of Workers Who Contact Electrical Energy.*

NIOSH Alert! Dec. 1987, *Preventing Electrocutions by Undetected Feedback Electrical Energy Present in Power Lines*.

NIOSH Alert! Jan. 1986, *Preventing Occupational Fatalities in Confined Spaces*.[11]

OSHA 3120, *Control of Hazardous Energy (Lockout/Tagout)*.[12]

REA 65-1, *Design Guide for Rural Substations*.[13]

REA 163-2, *Preventive Maintenance Management Manual*.

---

[7]ISO/IEC publications are available from the ISO Central Secretariat, Case Postale 56, 1 rue de Varembé, CH-1211, Genève 20, Switzerland/Suisse (http://www.iso.ch/). ISO/IEC publications are also available in the United States from Global Engineering Documents, 15 Inverness Way East, Englewood, CO 80112, USA (http://global.ihs.com/). Electronic copies are available in the United States from the American National Standards Institute, 11 West 42nd Street, 13th Floor, New York, NY 10036, USA (http://www.ansi.org/).

[8]NEMA publications are available from Global Engineering Documents, 15 Inverness Way East, Englewood, CO 80112, USA (http://global.ihs.com/).

[9]The NEC is published by the National Fire Protection Association, Batterymarch Park, Quincy, MA 02269, USA (http://www.nfpa.org/). Copies are also available from the Institute of Electrical and Electronics Engineers, 445 Hoes Lane, P.O. Box 1331, Piscataway, NJ 08855-1331, USA (http://standards.ieee.org/).

[10]NFPA publications are published by the National Fire Protection Association, Batterymarch Park, Quincy, MA 02269, USA (http://www.nfpa.org/).

[11]NIOSH publications can be obtained from the National Institute of Occupational Safety and Health, U.S. Public Health Service, U.S. Department of Health.

[12]OSHA publication can be obtained from the Occupational Safety and Health Administration, U.S. Department of Labor.

[13]REA publication can be obtained from the Rural Electrification Administration, U.S. Department of Agriculture.

Copyright © 2001 IEEE. All rights reserved.

Copyright The Institute of Electrical and Electronics Engineers, Inc.
Provided by IHS under license with IEEE
No reproduction or networking permitted without license from IHS
Not for Resale

REA 165-1, *Substation Inspection and Maintenance*.

16.17 Bibliography

[B1] AS 2467-1981, Maintenance of electrical switchgear.

[B2] AS 2676.1-1990, Guide to the installation, maintenance, testing and replacement of secondary batteries in or on buildings Part 1: Vented cells.

[B3] AS 3000-1991, SAA Wiring Rules.

[B4] ASTM D2029, Specification for Sulfur Hexafluoride Gas.

[B5] ASTM D2472, Determining the Moisture Content of Gases by Use of Wet Bulb Temperature.

[B6] ASTM Standards for Electrical Insulation and Electronics: v. 10.02 Electrical Insulation (2): Wire and Cable, Heating and Electrical Tests.

[B7] ASTM Standards for Electrical Insulation and Electronics: v. 10.03 Electrical Insulating Liquids and Gases: Electrical Protective Equipment.

[B8] AVO Biddle Instruments Bulletin 21-22a, The Improved Meggar Insulation Analyzer.

[B9] AVO Biddle Instruments Bulletin 21-P8b, "A Stitch in Time," The Complete Guide to Electrical Insulation Testing.

[B10] AVO Biddle Instruments Bulletin 22, Portable DC Dielectric Test Equipment.

[B11] AVO Biddle Instruments Bulletin 22-P-1, A New Design for High Voltage Dielectric Test Sets.

[B12] AVO Biddle Instruments Bulletin 22-T-3, Why Dielectric Failure is a Major Cause of Electrical System Breakdown.

[B13] AVO Biddle Instruments Bulletin 66c, Partial Discharge (corona) Test Equipment and Systems.

[B14] AVO Biddle Instruments Bulletin AVBT24, Digital Low Resistance Ohmmeters.

[B15] AVO Biddle Instruments Bulletin AVTB252, DET2/2 Digital Ground Resistance Tester.

[B16] AVO Biddle Instruments Bulletin AVTBMBITE, Miniature Battery Impedance Test Equipment Report, "Insulation Resistance Testing: Teaching An Old Dog New Tricks" by Stephen Drenner.

 Copyright © 2001 IEEE. All rights reserved.

Copyright The Institute of Electrical and Electronics Engineers, Inc.
Provided by IHS under license with IEEE
No reproduction or networking permitted without license from IHS Not for Resale

[B17] Bishop, J. G., *Electrical Maintenance Hints*. Trafford, Pa.: Westinghouse Electric Corp., 1984.

[B18] Boden, D-P., "Selection, Operation, and Maintenance of Standby Battery Systems," *Plant Engineering*, Dec. 7, 1978.

[B19] CIBSE, Chartered Institution of Building Services Engineers, London, TM 17: 1990, Building Services Maintenance Management.

[B20] Davies, T., *Protection of Industrial Power Systems*. Cleveland, U.K.: Pergamon Press Inc., 1984.

[B21] EASA Standards for the Electrical Apparatus Sales and Service Industry.

[B22] FM Technical Advisory Bulletin 5-20/14-22, Electrical Maintenance.

[B23] FM Technical Advisory Bulletin 5-23/14-2, Emergency/Standby Power Systems.

[B24] FM Technical Advisory Bulletin 5-25/14-25, Infrared Thermal Imaging Systems.

[B25] FM Technical Advisory Bulletin 5-32, Electronic Computer Systems.

[B26] FM Technical Advisory Bulletin 5-195/14-215, Circuit Breaker Trip Mechanism Maintenance.

[B27] GEZ-7609B, *Major Considerations in Evaluating Switchgear Maintenance*.

[B28] Gill, A. S., *Electrical Equipment Testing & Maintenance,* Second Edition. Englewood Cliffs, N.J.: Prentice-Hall, Inc., 1982.

[B29] GIZ-2650A, *Electrical On-Site Accident Prevention*.

[B30] Hubert, C. I., *Preventive Maintenance of Electrical Equipment*. 2nd ed. New York: McGraw-Hill Book Co., 1969.

[B31] IEC 60480, Guide to Checking of Sulphur Hexafluoride Taken From Electrical Equipment.

[B32] IEC 60900, Standard for Hand Tools for Live Line Working Up to 1000 V AC and 1500 V DC.

[B33] IEEE JH 2112-1, *Protection Fundamentals for Low-Voltage Electrical Distribution Systems in Commercial Buildings*, 1974.

[B34] IEEE Std 32-1972 (Reaff 1991), IEEE Standard Requirements, Terminology, and Test Procedures for Neutral Grounding Devices.

Copyright © 2001 IEEE. All rights reserved.

Copyright The Institute of Electrical and Electronics Engineers, Inc.
Provided by IHS under license with IEEE
No reproduction or networking permitted without license from IHS
Not for Resale

[B35] IEEE Std 80-2000, IEEE Guide for Safety in AC Substation Grounding.

[B36] IEEE 100, *The Authoritative Dictionary of IEEE Standards Terms,* Seventh Edition.

[B37] IEEE Std 336-1985, IEEE Standard Installation, Inspection, and Testing Requirements for Power, Instrumentation, and Control Equipment.

[B38] IEEE Std 446-1995, IEEE Recommended Practice for Emergency and Standby Power Systems for Industrial and Commercial Applications.

[B39] IEEE Std 637-1985, IEEE Guide for the Reclamation of Insulating Oil and Criteria for Its Use.

[B40] IEEE Std C37.04-1999, IEEE Standard Rating Structure for AC High-Voltage Circuit Breakers Rated on a Symmetrical Current Basis.

[B41] IEEE Std C37.09-1999, IEEE Standard Test Procedure for AC High-Voltage Circuit Breakers Rated on a Symmetrical Current Basis.

[B42] IEEE Std C37.13-1990, IEEE Standard for Low-Voltage AC Power Circuit Breakers Used in Enclosures.

[B43] IEEE Std C37.35-1995, IEEE Guide for the Application, Installation, Operation, and Maintenance of High-Voltage Air Disconnecting and Load Interrupter Switches.

[B44] IEEE Std C37.48-1997, IEEE Guide for Application, Operation, and Maintenance of High-Voltage Fuses, Distribution Enclosed Single-Pole Air Switches, Fuse Disconnecting Switches, and Accessories.

[B45] IEEE Std C37.61-1973 (Reaff 1992), IEEE Guide for the Application, Operation, and Maintenance of Automatic Circuit Reclosers.

[B46] IEEE Std C57.13-1993, IEEE Standard Requirements for Instrument Transformers.

[B47] IEEE Std C57.13.1-1981 (Reaff 1992), IEEE Guide for Field Testing of Relaying Current Transformers.

[B48] Kelleher, R., Northeast Utilities, "Impedance Testing Is The Coming Thing For Substation Battery Maintenance," *Transmission & Distribution*, Nov. 1991.

[B49] Mason, C. R., *The Art and Science of Protective Relaying*, New York: John Wiley & Sons, Inc., 1956. Reprinted by General Electric Company, GER-3738.

[B50] NECA 400-1998, Recommended Practice for Installing and Maintaining Motor Control Centers.

[B51] NECA EDL Publication 6/77, Fault Detecting and Disconnecting Devices.

 Copyright © 2001 IEEE. All rights reserved.

Copyright The Institute of Electrical and Electronics Engineers, Inc.
Provided by IHS under license with IEEE
No reproduction or networking permitted without license from IHS Not for Resale

[B52] NECA EDL Publication 3/78, System and Equipment Grounding.

[B53] NECA EDL Publication 9/81, Electrical System Acceptance Testing.

[B54] NECA EDL Publication 12/85, Electrical Service Equipment.

[B55] NECA EDL Publication 10/91, OSHA Safety and Health Standards Digest for Electrical Construction Workers.

[B56] NEMA AB 3-1996, Molded-Case Circuit Breakers and Their Application.

[B57] NEMA ICS 1.1-1984 (Reaff 1998), Safety Guidelines for the Application, Installation and Maintenance of Solid State Control.

[B58] NEMA ICS 1.3-1986 (Reaff 1991), Preventive Maintenance of Industrial Control Systems and Equipment.

[B59] NEMA ICS 2-1993, Industrial Control Devices, Controllers and Assemblies.

[B60] NEMA ICS 2.2-1993, Maintenance of Motor Controllers After a Fault Condition.

[B61] NEMA ICS 2.3-1983 (Reaff 1995), Instructions for the Handling, Installation, Operation, and Maintenance of Motor Control Centers.

[B62] NEMA KS 1-1996, Enclosed and Miscellaneous Distribution Equipment Switches (600 V Maximum).

[B63] NEMA PB 1.1-1996, General Instructions for Proper Installation, Operation, and Maintenance of Panelboards Rated 600 V or Less.

[B64] NEMA PB 2.1-1996, General lnstruction for Proper Handling, Installation, Operation and Maintenance of Deadfront Distribution Switchboards Rated 600 V or Less.

[B65] NEMA PB 2.2-1999, Application Guide for Ground Fault Protective Devices for Equipment.

[B66] NETA ATS-1999, Acceptance Testing Standard.[14]

[B67] NETA ETT-2000, Certification of Electrical Testing Personnel.

[B68] NETA MTS-2000, Maintenance Testing Standard.

[B69] NFPA 110-1999, Emergency and Standby Power Systems.

[B70] NFPA 111-2001, Stored Electrical Energy Power Supply Systems.

[14]NETA publications can be obtained from the InterNational Electrical Testing Association, Morrison, CO.

Copyright © 2001 IEEE. All rights reserved.

Copyright The Institute of Electrical and Electronics Engineers, Inc.
Provided by IHS under license with IEEE
No reproduction or networking permitted without license from IHS Not for Resale

[B71] NIOSH Alert! Aug. 1991, *Preventing Electrocutions During Work with Scaffolds Near Overhead Power Lines*.

[B72] *NIOSH Alert!* July 1985, *Requests for Assistance in Preventing Electrocutions from Contact Between Cranes and Power Lines*.

[B73] *NIOSH Alert!* July 1989, *Preventing Electrocutions of Workers Using Portable Metal Ladders Near Overhead Power Lines*.

[B74] OSHA 2098, *OSHA Inspections*.

[B75] OSHA 2205, *Protection for Workers in Imminent Danger*.

[B76] OSHA 2206, *General Industry.*

[B77] OSHA 2207, *Construction Industry.*

[B78] OSHA 3007, *Ground-Fault Circuit Interrupters*.

[B79] OSHA 3021, *OSHA Employee Workplace Rights*.

[B80] OSHA 3047, *Onsite Consultation for the Employer.*

[B81] OSHA 3071, *Job Hazard Analysis*.

[B82] OSHA 3077, *Personal Protective Equipment*.

[B83] OSHA 3079, *Respiratory Protection*.

[B84] OSHA 3088, *How to Prepare for Workplace Emergencies*.

[B85] REA161-5, G*uide for Making an Operation and Maintenance Survey of Transmission and Distribution Plant*.

[B86] REA 161-11, *Operation and Maintenance Records*.

[B87] REA 163-1, *Steam-Electric Generating Plants Operation and Maintenance Inspection Manual*.

[B88] SAFT NIFE Inc., *Questions/Answers on Nickel Cadmium Batteries,* Oct. 12, 1973.

[B89] Smeaton, R. W., ed., *Switchgear and Control Handbook*. 3rd ed. McGraw-Hill Book Co., 1987.

[B90] Square D Company SD363 1/88, *Circuit Breaker Application Guide: Field Testing Industrial Molded Case Circuit Breakers*.

 Copyright © 2001 IEEE. All rights reserved.

Copyright The Institute of Electrical and Electronics Engineers, Inc.
Provided by IHS under license with IEEE
No reproduction or networking permitted without license from IHS Not for Resale

[B91] UL 98-1998, Enclosed Dead Front Switches.

[B92] UL 347-2000, High Voltage Industrial Control Equipment.

[B93] UL 489-1996, Molded-Case Circuit Breakers, Molded-Case Switches, and Circuit-Breaker Enclosures.

[B94] UL 891-1998, Dead Front Switchboards.

[B95] UL 1008-2001, Transfer Switch Equipment.

[B96] UL 1062-2000, Unit Substations

[B97] UL 1087-1998, Molded-Case Switches.

[B98] UL 1558-1999, Metal-Enclosed Low-Voltage Power Circuit Breaker Switchgear.

[B99] UL 1561-2001, Dry-Type and General Purpose Transformers.

[B100] UL 1562-2001, Dry-Type Distribution Transformers Over 600 V

Copyright © 2001 IEEE. All rights reserved.

Copyright The Institute of Electrical and Electronics Engineers, Inc.
Provided by IHS under license with IEEE
No reproduction or networking permitted without license from IHS
Not for Resale

--`,,`--`,,`,,`,`,,`,`---

Copyright The Institute of Electrical and Electronics Engineers, Inc.
Provided by IHS under license with IEEE
No reproduction or networking permitted without license from IHS

Not for Resale

INDEX

A

Abnormal frequencies protection (generators), 491–492
Abnormalities, protection against, 3–4
Abnormal power supply conditions (motors), 344–347
Accelerometers, 374
Accessories for low-voltage circuit breakers, 227
AC component of armature current (generators), 449
AC magnetically held main contactor, 345, 346–347
Adjustable instantaneous trip unit, 204
Aerial cable system, 322
Air circuit breaker, 200, 560
Air-core current transformer (CT) method of bus protection, 522–523
Alarm switch (low-voltage circuit breakers), 227
Alternator-rectifier exciter (generators), 445, 446–447
Ampacity (cables), 308–309
Ampere rating, 129
Ampere-squared seconds (I_2t), 131, 170
ANSI standards, 12
Antifriction bearing, 376
Antimotoring protection (generators), 83, 487–490
Arcing fault, 231, 242–247, 260, 262–263, 330–332
Arcing-fault protection (busways), 333–334
Arcing time, 129
Arrester. *See* Surge arrester
Askarel (transformers), 396
Attraction, electromagnetic, 70
Automatic reclosing protection (motors), 386–388
Automatic synchronizing relay, 74–76, 79–80
Automatic synchronizing system, 505–506
Automatic transfer protection (motors), 345, 386–388
Auxiliary
  contacts (low-voltage circuit breakers), 227
  current transformers (CTs), 61–62, 100, 110
  timers (motors), 249
  voltage transformers (VTs), 100

B

Backup current-limiting fuse, defined, 159
Backup functions of undervoltage relays, 81
Backup ground time-overcurrent relay (Device 51G)
  large generators, 511
  medium generators, 510
  small generators, 509
Backup overcurrent relay (Device 51V)
  large generators, 511
  medium generators, 510
  small generators, 509
Backup protection
  battery-powered applications, 159
  buses, 525
  conductors, 297–298
  generally, 69–70
  generators, 463–474, 492–498
  ground-fault, 249
  overcurrent protection, 575
  service supply lines, 569–571
Balanced three-phase conditions, 29–30
Bar current transformer (CT), 48
Basic impulse insulation level (BIL) (CTs), 51
Battery
  dc overcurrent backup, 159
  service supply lines, 545
  switchgear, 689–690
  uninterruptible power supply (UPS), 413
Bearings, 371
Bimetallic overload protective devices, 320, 351
Bolted fault, 328–330, 331
Bolted-fault protection (busways), 334–335
Bolted-pressure contact fused switches, 247
Boric acid fuse, 178–179

Copyright © 2001 IEEE. All rights reserved.

Copyright The Institute of Electrical and Electronics Engineers, Inc.
Provided by IHS under license with IEEE
No reproduction or networking permitted without license from IHS
Not for Resale

Bourdon gauge, 410
Branch circuit, motor, 195
Branch currents, 40–42, 44
Breaker failure protection, 498–499, 569–571
Bridge, defined, 130
Bridge temperature relay, 90
Brushless exciters
  generators, 445, 446–447, 457, 474–476, 477
  motors, 379, 389
Burdens
  current transformers (CTs), 52, 53
  voltage transformers (VTs), 64
Bus-bracing requirements (low-voltage fuses), 154
Bus-differential protection, 254
Bus duct (sequence impedance), 26
Bus failure, 519
Bushing current transformer (CT), 48–49, 394, 521
Bus protection, 558
  air-core current transformer (CT) method, 522–523
  arrangements, 516–517, 518
  backup, 525
  conductors, 525
  current differential relays, 523–524
  differential relays, 516, 517, 518, 519–525
  exposed circuits, 525–526
  generally, 515–517
  ground faults, 518
  high-impedance differential relay, 115
  maximum continuous operating voltage (MCOV), 526–527
  overcurrent relays, 517–518
  overvoltage, 80–81, 96
  partial differential relays, 524–525
  percentage differential relays, 523
  sectionalized arrangements, 519
  summation overcurrent relays, 524–525
  surges, 525–527
  temporary overvoltage (TOV), 526
  voltage differential relays, 520–522
Bus tie protection, 197
Busway protection
  arcing faults, 330–334
  bolted faults, 328–330, 331, 334–335
  continuity check, 336
  coordination of devices, 301–307
  faults, 328–332
  generally, 285, 326–336
  high-potential test, 336
  insulation resistance test, 336
  maintenance, 336
  overload, 333
  protective devices, 332–336
  sequence impedance, 26
  temperature, 290–295
  testing, 336
  types, 326–328
  visual inspection, 336

C

Cable. *See also* Cable protection, insulated power; Overload protection (cables)
  backup protection, 297–298
  circuits, 192
  code requirements, 324–325
  current, 287, 310
  final temperature, 293–295
  for ground-fault protection on motors, 368
  initial temperature, 293–295
  overvoltages, 286
  percent insulation level (%IL), 286–287
  physical protection, 321–324
  reactances, 288
  sequence impedance, 26
  short-circuit current protection, 288–307
  temperature, 287, 290–295, 302, 310
  temperature-current-time curves, 292–293, 294
  uses, 298–301
Cable protection, insulated power. *See also* Cable; Overload protection (cables)
  adverse ambient conditions, 323–324
  aerial cable systems, 322
  coordination of devices, 301–307
  devices, 295–298, 299, 300

Copyright © 2001 IEEE. All rights reserved.

Copyright The Institute of Electrical and Electronics Engineers, Inc.
Provided by IHS under license with IEEE
No reproduction or networking permitted without license from IHS
Not for Resale

direct buried cables, 318, 322
exposed raceways, 322
foreign elements, 324
fuses, 155
generally, 155, 285–287, 321–324
mechanical hazards, 321–322
portable cables, 323
sheath or shield temperature, 291–292
short-circuit current, 288–307
underground systems, 322
Calculating
arc fault damage, 246–247, 260, 262–263
current transformer (CT) accuracy, 56–61
decrement characteristics on generators, 447–451
fault levels of protective devices, 33–42
5-cycle-to-8-cycle interrupting duty, 18
ground-fault current magnitudes, 240–242
intermediate overload rating, 313–314
load current in normal circuits, 14
momentary application of short circuits, 18
per-unit method of, 19–20
phase coordination study elements, 610–612, 615, 618, 622, 626
short-circuit current, 11–12, 19–20
Capacitor protection, 193
Cartridge fuse, 138
Circuit breaker, generally, 7. *See also* Low-voltage circuit breaker
Circuit breaker (transformers), 417–418
Circuit protector (motors), 353–354
Circuit sensitivity for ground faults, 255
Clapper instantaneous relay, 94
Class CA fuse, 134, 136
Class CB fuse, 134, 136
Class CC fuse
dimensions, 144
documentation, 134, 136
interrupting ratings, 145
Class C fuse, 134, 136
Class G fuse
dimensions, 141
documentation, 134, 136
interrupting ratings, 145
Class H fuse
dimensions, 139
documentation, 134
interrupting ratings, 145
Class J fuse
dimensions, 142
documentation, 134, 136
interrupting ratings, 145
Class K fuse
dimensions, 139
documentation, 136–137
interrupting ratings, 145
Class L fuse
dimensions, 140
documentation, 134, 136
example, 149
interrupting ratings, 145
Class R fuse
dimensions, 144
documentation, 137
Class RK-1 fuse (interrupting ratings), 145
Class RK-5 fuse
example, 148
interrupting ratings, 145
Class T fuse
dimensions, 143
documentation, 137
interrupting ratings, 145
Clearing times of protective devices, 247–248, 296, 297
Code requirements for cable protection, 324–325
Cogeneration generator, 443–444
Communicating electronic trip unit, 205–206
Computer model for calculating short-circuit current, 35–41
Computing. *See* Calculating
Conductor protection. *See also* Busway protection; Cable protection, insulated power
bus, 525
overcurrents, 581, 582
Connections
current transformers (CTs), 55–56
voltage transformers (VTs), 64

Copyright © 2001 IEEE. All rights reserved.

Copyright The Institute of Electrical and Electronics Engineers, Inc.
Provided by IHS under license with IEEE
No reproduction or networking permitted without license from IHS
Not for Resale

Conservator tank (transformers), 396, 398, 399
Continuity check (busways), 336
Continuous-ampere rating (fuses), 579
Continuous-current rating, 50, 184, 208, 211
Continuous monitoring devices, 377
Continuous online diagnostic systems, 378
Continuous-thermal current rating, 50
Control voltage rating (circuit breakers), 201
Conventional phase differential overcurrent relay, 362, 363
Cooling systems
  generators, 456
  motors, 372
Coordinating. *See also* Overcurrent coordination
  fuses and motor starters, 194, 195
  fuses and surge arresters, 194, 196
  generally, 5
  ground-fault protection, 258–274
  protective devices, 219–221
  surge arresters and current-limiting fuses, 196
  surge arresters and expulsion fuses, 196
Coordination time interval (CTI). *See* Overcurrent coordination
Core-balance current transformer (CT), 250–252, 274
Core balance protection, 250–252, 274
Core hot spot (generators), 456
Corner grounded delta system, 224
Cost of downtime and maintenance, 3
CSA standards for low-voltage fuses, 133–138
CT. *See* Current transformer (CT)
CTI (coordination time interval). *See* Overcurrent coordination
Current, short-circuit. *See* Short-circuit current
Current balance relay, 87–88
Current-carrying components, 12–13, 307–310
Current differential relay, 523–524, 522
Current-interrupting devices (transformers), 415
Current limiter, 130
Current-limiting characteristics of low-voltage fuses, 152–153
Current-limiting circuit breaker, 202, 205, 217
Current-limiting fuse
  coordination with surge arresters, 196
  defined, 130, 169–170
  distribution, 174–177
  example, 149
  generally, 145, 152–153, 177–178, 217
  general purpose, defined, 170
  interrupting ratings, 177–178
  maximum permissible overvoltages, 171
  minimum-melting time-current characteristic (TCC) curves, 187
  in motor branch circuit, 185
Current-limiting waveform, 203
Current magnitudes of ground faults, 240–242
Current rating (high-voltage fuses), 184
Current responsive (buses), 520
Current-sensing devices, 419–433, 582
Current summation (buses), 520
Current transformer (CT). *See also* Window current transformer (CT)
  accuracy, 51–52, 56–61
  applications, 50–51
  auxiliary, 61–62, 100, 110
  basic impulse insulation levels (BILs), 51
  burden, 52, 53, 61
  connections, 55–56
  core-balance, 250–252, 274
  differential current, 108–109
  flux density, 61
  overcurrent ratio curves, 53–54
  polarity, 54–55
  ratios, 49–50, 52
  relaying accuracy classes, 52
  residually connected, 368
  safety precautions, 62
  saturation, 61, 580
  secondary excitation characteristics, 53–54
  types, 47–49
  windings, 47–49
Cutout, distribution fuse, 175–177, 185

Copyright © 2001 IEEE. All rights reserved.

--`,,`,,`,,`,,`,,`---

Copyright The Institute of Electrical and Electronics Engineers, Inc.
Provided by IHS under license with IEEE
No reproduction or networking permitted without license from IHS
Not for Resale

D

Damper winding protection (motors), 379
D'Arsonal contact-making dc millivoltmeter, 86
DC applications of low-voltage fuses, 159–165
DC component of armature current (generators), 449
DC fuse, 138, 159–165
DC generator-commutator exciter (generators), 445–446
DC high-potential test, 118
DC magnetically held main contactor, 347
DC time constant, 160, 164–165
DC undercurrent relay, 86, 481
DC voltage ratings, 164–165
Decay rates (short-circuit currents), 288–289
Decrement characteristics (generators), 447–451
Decrement in fault currents, 16–17
Delay, defined, 130
Delta-connected current transformer (CT), 55, 56, 57
Delta-rated circuit breaker, 225
Delta system, 224
Design of power systems, preliminary, 5–7
Diagnostic systems (motors), 378–379
Diagnostic testing (switchgear), 641, 652–653, 682–689
Dielectric absorption ratio test (insulation), 688
Dielectric dissipation factor tan delta, 697
Differential backup protection (generators), 463–465
Differential ground relay (Device 87TN) (service supply lines), 556
Differential protection of motors, 109
Differential relay (Device 87). *See also individual types*
  buses, 516, 517, 518, 519–525
  generally, 107–119
  generators generally, 459–465, 469–471
  large generators, 511
  medium generators, 510
  transformers, 427–433, 434, 435
Direct buried cable, 318, 322
Direct grounding. *See* Solidly grounded system
Directional comparison relaying systems, 552
Directional impedance relay, 74, 75
Directional overcurrent ground-fault relay (Device 67N) (service supply lines), 553–554, 556
Directional overcurrent phase relay (Device 67) (service supply lines), 556
Directional overcurrent relay (Device 67 or 87G), 98–103
Directional phase-overcurrent relay (Device 67) (service supply lines), 553–554
Directional power relay (Device 32), 83–85, 489, 556
Direct transfer trip relaying systems, 552
Direct tripping circuit breaker, 296
Dissolved fault-gases detection on transformers, 407–408
Distance backup protection (generators), 493
Distance relay (Device 21), 71–74, 464, 478–480, 492, 551–552, 556
Distribution circuit, 231
Distribution current-limiting fuse, 174–177
Distribution fuse cutout, 175–177, 185
Distribution surge arrestor, 526–527
Donut current transformer (CT), 109
Dry preservation systems (transformers), 395–396
Dual-element fuse, 131, 352–353, 579

E

Economic considerations when designing power systems, 3
Eddy current, 414, 456
Electromagnetic attraction relay, 70
Electromagnetic induction relay, 70
Electromechanical negative-sequence overcurrent relay (generators), 483
Electromechanical relay, 67, 70. *See also individual types*

Copyright © 2001 IEEE. All rights reserved.

Copyright The Institute of Electrical and Electronics Engineers, Inc.
Provided by IHS under license with IEEE
No reproduction or networking permitted without license from IHS
Not for Resale

Electromotive force, 183
Electronic overload relays (motors), 351–352
Electronic trip circuit breaker, 203, 205, 209, 213–214, 215
Elementary induction disk relay, 92
Emergency overload current (cables), 311, 315, 316, 317
Emergency power systems, 266
Enclosed nonventilated transformer, 395
Environmental hazards (transformers), 437–438
Equipment damage *vs*. Service continuity, 2–3
Excessive shaft torques protection (motors), 388–389
Excessive starting protection (motors), 381
Excitation protection, 85, 444–447
Excitation voltage availability (motors), 380
Exciter relay (generators), 487
Exhaust filter, 179
Exhaust hood temperature (generators), 489
Exposed cable raceway, 322
Exposed circuit, 525–526
Expulsion power fuse
  coordination with surge arresters, 196
  defined, 170
  fiber-lined, 178–179
  generally, 178–181
  interrupting ratings, 179, 180, 181
  solid-material, 180–181

F

Failure-to-rotate protection (motors), 389–390
Fault. *See also individual types*
  bus, 515–516
  busways, 328–332
  computer studies, specialized, 42–44
  geometry of, 13
  three-phase, 13
Fault current, 16–17
Fault-detection sensitivity (differential relays), 428
Fault-indicating ammeter, 274
Fault overcurrent devices, 232
Feeder protection, 197, 298–301, 320–321, 325, 556
Ferroresonance
  transformers, 436–437
  voltage transformer (VT), and generators, 500
Ferrule, defined, 131
Fiber-lined expulsion power fuse, 178–181, 183–184
Field-current failure protection (motors), 379–380
Field dielectric tests (switchgear), 689, 690
Field follow-up of implementing power system design, 8
Field overexcitation (generators), 457–459
Field winding (generators), 457
Filtered ventilated transformer, 395
Final temperature in conductors, 293–295
Fire detection (motors), 372
5-cycle-to-8-cycle interrupting duty calculation, 18
Fixed percentage differential relay, 109, 110, 111, 112
Fixed time-delay relay (generators), 457–458
Flame detection, 372
Flashover, insulation, 25
Flicker, voltage, 540
Fluid-film bearing, 373
Flux, 250–252, 485
Forced-air cooling (transformers), 412
Fortescue's thesis, 20–21
Four-pole transfer switches, 265
Frequency-compensated (or -insensitive) overvoltage relay (generators), 491
Frequency derating factor (cables), 310
Frequency rating (circuit breakers), 201
Frequency relay (Device 81), 104–107, 557–558
Frequency variation (service supply lines), 541–542
Frequent-fault-incidence application, 412–422, 425
Full-range current-limiting fuse, defined, 170

Copyright © 2001 IEEE. All rights reserved.

Copyright The Institute of Electrical and Electronics Engineers, Inc.
Provided by IHS under license with IEEE
No reproduction or networking permitted without license from IHS
Not for Resale

Fuse. *See also individual types*
cables, 320
conductors, 296, 297
generally, 7
generators, 499–500
overcurrent coordination, 579, 596
transformers, 417–418, 423–425
voltage transformers (VTs), 65
Fused switches, 247, 417–418
Fuse-link, defined, 131
Fuse-holder and refill-unit style (power fuses), 179, 180, 181
Fuse-unit style (power fuses), 179, 180
Fusible protective device (service supply lines), 549
Fusible switches, antisingle-phasing provisions of, 242

G

Gas-accumulator relay (transformers), 402
Gas-analysis equipment (transformers), 408
Gas-detector relay (transformers), 403
Gas-oil seal (transformers), 396, 397–398
Gas-sensing device (transformers), 418–419
General-purpose current-limiting fuse, 170
Generator differential relay (Device 87G) (service supply lines), 557
Generator field ground relay (Device 64F)
large generators, 511
medium generators, 510
Generator neutral ground time overcurrent relay (Device 51GN) (service supply lines), 557
Generator protection
abnormal frequencies, 491–492
ac component of armature current, 449
air-cooled, 455, 456
alternator-rectifier exciters, 446–447
antimotoring, 487–490
automatic synchronizing systems, 505–506
breaker failures, 498–499
calculating decrement characteristics, 447–451
cogeneration applications, 443–444
cooling system failures, 454, 456
core hot spots, 454, 456
dc component of armature current, 449
dc generator-commutator exciters, 445–446
dc undercurrent relays, 481
decrement characteristics, 447–451
differential backup, 463–465
differential relays, 459–465, 469–471
directional power relay, 489
distance backup, 493
distance relays, 478–480, 492
electromechanical negative-sequence overcurrent relays, 483
excitation systems, 85, 444–447
exciter relays, 487
exhaust hood temperatures, 489
ferroresonance, voltage transformer (VT), 500
field overexcitation, 457–459
field windings, 457
fixed time-delay relays, 457–458
frequency-compensated (or -insensitive) overvoltage relay, 491
fuses, 499–500
generally, 441
governing system, 490
ground faults, 465–473, 498
grounding, 451–454
grounding-transformer grounding, 453–454, 472–473
harmonics, 467, 468, 471
high-resistance grounding, 443, 452–453, 466–469
high-speed reclosing of transmission lines, 504
hot spots, 454, 456
hydrogenerators, 477–478, 489, 490
impedance relays, 493
inadvertent energizing, 502–504
induction applications, 444
inverse time-delay relays, 458
large industrial applications, 442–444
large machines, 511–512
loss of field, 477–481
loss of synchronism, 484–485

Copyright © 2001 IEEE. All rights reserved.

Copyright The Institute of Electrical and Electronics Engineers, Inc.
Provided by IHS under license with IEEE
No reproduction or networking permitted without license from IHS
Not for Resale

low-resistance grounding, 443, 453, 469–471
manual synchronizing systems, 506
medium machines, 510–511
multiple-isolated applications, 442
offset mho distance relays, 478, 479
oil pressure, 490
overcurrent backup, 494–498
overcurrent coordination, 587–589
overexcitation, 485–487
overload, 454–455
overvoltage, 490–491
phase faults, 459–465, 492–498
reactance grounding, 453, 471
reactive relays, 480–481
resistance temperature detectors (RTDs), 454, 455
reverse-power relays, 480–481, 488–489
rotating exciters, 446–447
rotor field currents, 473–476
rotors, 459
self-balancing differential scheme, 461–463
semiautomatic synchronizing systems, 506
sequence impedances, 22–23
sequential tripping mode, 507, 509
short-circuits, 444–451
shutdown, 500–502
simultaneous tripping mode, 507
single-isolated applications, 441–442
small machines, 509–510
startup, 500–502
static exciters, 447
static negative-sequence overcurrent relays, 484
stationary exciters, 446
stator faults, 459–473
stator thermal devices, 454–456
steady-state line switching, 504
steam turbines, 477, 487–490
synchronizing, 504–506
system backup, 492–498
third-harmonic overvoltage scheme, 468
time-overcurrent relay, 464, 481–484, 492–494
transmission-line reclosings, 504
trip logic table, 508
tripping schemes, 506–509
turbine-trip oil system, 490
unattended, 441
unbalanced currents, 481–484
underfrequency, 492
undervoltage, 492
unit generator-transformer applications, 443, 444
unit separation tripping mode, 507
valve limit switches, 489–490
variable slope percentage differential relay, 461
var relays, 480–481
voltage-balance relays, 500
voltage-controlled relays, 495–496
voltage-dependent overcurrent relays, 494–495
voltage regulators, 458–459
voltage-restrained relays, 496–497
voltage-to-frequency limiters, 486
voltage-to-frequency relays, 486
voltage transformers (VTs), 499–500
winding temperatures, 455
Generator stator thermal device, 454–456
Generator tripping mode of protection, 507
Glass fuse, 137
Governing oil system (generators), 490
Ground differential relay
generally, 252–254
large generators, 511
transformers, 428, 429, 432–433, 434, 435
Ground fault
arcing, 231, 242–247, 260, 262–263
buses, 518, 519
circuit sensitivity, 255
coordination schemes, 260–268, 269–274
core balance protection, 250–252, 274
current magnitudes, 240–242, 290
ground differential protection, 252–254
ground return protection, 252, 253
identification, 268–271, 274, 275, 276
location, 268–271, 274, 275, 276
low-voltage protective devices, 247–248
on motors, 343
origins, 240

Copyright © 2001 IEEE. All rights reserved.

Copyright The Institute of Electrical and Electronics Engineers, Inc.
Provided by IHS under license with IEEE
No reproduction or networking permitted without license from IHS
Not for Resale

protective schemes, 249–255
relaying devices, 248–249
residually connected protection, 249–250, 368
sensing devices, 248–249, 255
sheath or shield temperatures, 291–292
spot networks, 273, 276–277, 278, 279
trip devices, 248–249
zone selective interlocking (ZSI) coordination, 258–260, 261
Ground-fault detection, 96
Ground-fault detector relay (Device 64) (service supply lines), 554
Ground-fault protection
alternate power source, 264–268
applications generally, 255–256
cables for motors, 368
classification of system grounding, 233–234
clearing time, 247–248
coordination schemes, 258–274
core balance, 250–252, 274
direct grounding, 234–235
four-pole transfer switches, 265
generally, 231–232
generators, 465–473, 498
ground differential, 252–254
grounding, choices of, 232–234
ground return, 252, 253
high-resistance grounding, 236–238, 270, 274, 275, 276
identification of faults, 268–271, 274, 275, 276
isolation, transformer, 266
location of faults, 268–271, 274, 275, 276
low-resistance grounding, 235–236, 271
on mains and feeders, 257, 258
on mains only, 256–257
on mains only in fused systems, 257, 259
on motors, 354–356, 367–369
neutral contracts, overlapping, 265–266
overcurrent, 216–217, 626–627, 628–631
overvoltage, 96-97
residually connected, 249–250, 368
single-point grounding, 265
solid grounding, 234–235, 267, 268, 269, 272, 273, 274
spot networks, 273, 276–277, 278, 279
system types, 232–240
trip-operating time, 247
ungrounded systems, 238–240
using low-voltage circuit breakers, 216–217
zone selective interlocking (ZSI) coordination, 247, 258–260, 261
Ground-fault time-current characteristics (TCCs), 214–215
Grounding, choices of, 232–234
Grounding (generators), 451–454
Grounding-transformer grounding (generators), 453–454, 472–473
Ground overcurrent relay (CTs) (Device 50GS or 51GS), 55
Ground return protection, 252, 253
Grouping derating factor (cables), 309–310

H

Harmonic-restraint percentage differential relay (Device 87T), 109, 110, 113–114
Harmonics
conductors, 310
generally, 3, 110, 114
generators, 467, 468, 471
high-voltage fuses, 193
low-voltage circuit breakers, 210, 213
motors, 339, 342, 344
service supply lines, 542, 546
transformers, 61, 413–414, 430, 432
Heat flow (cables), 307–308
Hermetic refrigeration chiller motor, 348
High-impedance busway, 327–328
High-impedance differential relay (Device 87B), 115
High ohmic value resistance, 96
High-potential test
busways, 336
switchgear, 685–689, 698
High-pressure contact fused switches, 247
High-resistance-grounded system
generally, 236–238
generators, 443, 452–453, 466–469

Copyright © 2001 IEEE. All rights reserved.

Copyright The Institute of Electrical and Electronics Engineers, Inc.
Provided by IHS under license with IEEE
No reproduction or networking permitted without license from IHS
Not for Resale

ground-fault protection, 270, 274, 275, 276, 290
motors, 356
High rupturing capacity (HRC), 131
High-speed reclosing of transmission lines, 504
High-speed underfrequency relay (Device 81), 387
High-speed voltage relay, three-phase (Device 27), 388
High-voltage bus differential protection, 519–525
High-voltage fuse. *See also individual types;* Power fuse
applications generally, 183–185
for bus tie protection, 197
capacitor protection, 193
classification, 173–177
clearing time, estimated, 287
coordination with motor starters, 194, 195
coordination with surge arresters, 194, 196
current ratings, 184
documentation, 169
estimated clearing time, 287
interrupting ratings, 184–185
motor-circuit protection, 193–194
new designs of power fuses, 196–197
overload protection, 191–192
selecting, 183–185
system protection, 185–189
through-fault protection, 191
transformer protection, 189–192
two-fuse concept, 192
voltage ratings, 183–184
voltage transformer (VT) protection, 192–193
Hinged-armature instantaneous relay, 81, 93, 94, 97
Hot-spot temperature, 410–412, 454, 456
HRC (high rupturing capacity), 131
Hydrodynamic sleeve-bearing motor, 375
Hydrogenerator, 477–478, 489, 490
Hysteresis (transformers), 414

I

ICCB (insulated-case circuit breaker), 200
IEC-rated interrupting device, 12
Impedance distance relay, 72
Impedance relay (Device 40)
generally, 85, 86
generators generally, 493
large generators, 511
medium generators, 510
Impedances, short-circuit, 11, 18, 22
Inadvertent energizing protection (generators), 502–504
Incomplete starting sequence protection (motors), 381
Induction, electromagnetic, 70
Induction cup underfrequency relay, 106
Induction disk relay, 91, 92, 106
Induction generator, 444
Induction motor
fixed frequency medium ac polyphase squirrel-cage, 340
harmonic currents, 542
overexcitation, 385–386
phase unbalance protection, 347–348
protection generally, 381
rotor winding protection, 382
voltage sags, 539
Induction overcurrent relay, 524
Inertia (overtravel), 80–81, 92–93
Infrequent-fault-incidence application, 420–422, 425
Initial magnitude (short circuits), 15, 17
Initial temperature (conductors), 293–295
Injection test (switchgear), 695
In-phase transfer (motors), 389
In-plant generator protection, 556–558
Inrush current (transformers), 192, 193, 415, 424, 426, 427
Inrush current (transformers), magnetizing, 157, 189–191, 405, 424, 430
Inspection, visual (busways), 336
Instantaneous current, 210, 212–214
Instantaneous current adjustment, 209
Instantaneous direct-acting phase trip elements (circuit breakers), 206, 208

Copyright © 2001 IEEE. All rights reserved.

Copyright The Institute of Electrical and Electronics Engineers, Inc.
Provided by IHS under license with IEEE
No reproduction or networking permitted without license from IHS
Not for Resale

Instantaneous directional overcurrent relay, 103
Instantaneous ground-fault protection (motors), 367
Instantaneous overcurrent relay (Device 50, 51, 50/51, or 51V), 90–96, 97, 349–350, 551, 553, 554, 562
Instantaneous overcurrent relay (Device 87) (generators), 509
Instantaneous phase unbalance protection (motors), 349
Instantaneous relay (Device 95), 380
Instantaneous trip attachment, 90
Instantaneous trip circuit breakers (motors), 353–354, 355
Instantaneous undervoltage relay, 81, 345–346
Insulated-case circuit breaker (ICCB), 200
Insulation
  flashover, 25
  motors, 372
  organic, 290
  overload protection for cables, 319
Insulation resistance test
  busways, 336
  switchgear, 685–689, 698
Integrally fused circuit breakers, 202–203, 205, 208
Intermediate overload rating, 313–314
Intermediate zone (overload protection), 310–312, 319
Interrupting ability test (fuses), 160–161
Interrupting rating
  Class CC fuses, 145
  Class G fuses, 145
  Class H fuses, 145
  Class J fuses, 145
  Class L fuses, 145
  Class T fuses, 145
  current-limiting fuses, 177–178
  defined, 132
  expulsion power fuses, 179, 180, 181
  high-voltage fuses, 184–185
  IEC, 12
  low-voltage circuit breakers, 201, 204, 205
  low-voltage fuses, 145
  noncurrent-limiting devices, 290
Interruption, voltage, 541
Inverse-time circuit breakers (motors), 353
Inverse time-delay relay (generators), 458
Inverse-time overcurrent relay (Device 51), 349–350, 551, 593, 594
I_2t (ampere-squared seconds), 131, 170, 202

K

Kelvin bridge, 370–371
K-factor rating (transformers), 414–415

L

Large generator protection scheme, 511–512
Large industrial generator, 442–444
Latching contactor or circuit breaker (motors), 346
Let-through energy, 170
Lightning protection (motors), 382–385
Linear coupler method of bus protection, 522–523
Line-end fault, 43–44
Line-out fault, 44
Link, defined, 132
Liquid detectors (motors), 372
Liquid-level gauges (transformers), 398–400
Liquid preservation systems (transformers)
  conservator tanks, 398, 399
  designs, 396–398, 399
  devices, 398–408
  dissolved fault-gases detection, 407–408
  gas-accumulator relays, 402
  gas-detector relays, 403
  gas-oil seals, 397–398
  liquid-level gauges, 398–400
  positive-pressure inert gas, 397
  pressure-relief devices, 401–402
  pressure-vacuum bleeder valves, 400–401
  pressure-vacuum gauges, 400, 401
  sealed tanks, 396–397

Copyright © 2001 IEEE. All rights reserved.

Copyright The Institute of Electrical and Electronics Engineers, Inc.
Provided by IHS under license with IEEE
No reproduction or networking permitted without license from IHS
Not for Resale

static pressure relays, 404
sudden gas/oil-pressure relays, 406–407
sudden gas-pressure relays, 406
sudden oil-pressure relays, 405–406
sudden pressure relays, 404–405
Liquid temperature indicators (transformers), 408–410
Load flow current, 577
Load limitation (transformers), 416
Load-shedding scheme, 104, 105, 416
Load-side faults (motors), 343
Local backup protection, 69
Locked-rotor protection, 354, 361, 363, 389–390
Lockout relay (Device 86), 107, 520
Long-time current, 17, 210, 212–214
Long-time voltage variation (service supply lines), 536–538
Long-time zone (overload protection), 310–312
Loss-of-excitation relay (Device 40), 85–86, 380, 485
Loss-of-field protection (generators), 477–481
Loss-of-field relay, 73
Loss-of-power relay (Device 37), 386, 387
Loss-of-synchronism protection (generators), 484–485
Low-impedance busway, 326–327
Low-pickup relay, 97
Low-resistance-grounded system
generally, 235–236
generators, 443, 453, 469–471
ground-fault protection, 290
motors, 356, 368–369
service supply lines, 556
three-wire, 271
Low-voltage bus conductor protection, 525
Low-voltage circuit breaker
accessories, 226
applications, 216–226
clearing time, estimated, 296, 297
continuous-current rating, 201, 211
control voltage rating, 201
current limitation, 202–203
documentation, 199–200
estimated clearing time, 296, 297
frequency rating, 201
generally, 199–200, 232
harmonics, 210
interrupting rating, 201, 204, 205
overcurrent coordination, 578–579, 596, 597, 598, 599
pole rating, 201, 204, 205
power factor, 221–224
protection, 154–155
ratings, preferred, 206, 207, 208
ratings generally, 200–202, 203
selectivity, 210, 214, 219–221
short-circuit test values, 225–226
short-time current rating, 202
system protection, 216–219, 227
time-current characteristic (TCC) curves, 210–216
trip unit, 203–216, 219
voltage considerations, 224–226
voltage rating, 200–201, 226
zone selective interlocking (ZSI), 209–210
Low-voltage fuse
bus-bracing requirements, 154
cable protection, 155
circuit breaker protection, 154–155
clearing time, estimated, 287
current-limiting characteristics, 152–153
dc applications, 159–165
dimensions, 138–144
documentation, 133–138
estimated clearing time, 287
generally, 129–133
interrupting ratings, 145
motor overcurrent protection, 157–159
motor starter short-circuit protection, 155–156
selectivity, 145–151
tests for dc applications, 159–165
time constants, 160, 163, 164, 165
time-current characteristic (TCC) curves, 145, 147, 150
transformer protection, 156–157, 158
wire protection, 155
Low-voltage motor systems. *See* Motor, three-phase integral horsepower

Copyright © 2001 IEEE. All rights reserved.

Copyright The Institute of Electrical and Electronics Engineers, Inc.
Provided by IHS under license with IEEE
No reproduction or networking permitted without license from IHS
Not for Resale

Low-voltage power circuit breaker (LVPCB). *See* Low-voltage circuit breaker
Low-voltage protection
  ground faults, 247–248
  motors, 350–358
Lubrication of motors, 371

M

Machine thermal relay (Device 49), 89–90
Magnetic current adjustment, 209, 213
Magnetic trip devices, 208, 320
Magnetization, 385
Magnitude
  ground faults, 240–242
  short circuits, 11, 12–13, 15–19
Maintenance. *See also* Switchgear maintenance
  busways, 336
  costs, 3
  electrical switchgear, 639
  generally, 240
  motors, 343
Manual synchronizing system, 506
Mathematical notation for calculating short-circuit currents, 20
Maximum clearing I_2t, 152, 162
Maximum continuous operating voltage (MCOV), 96, 526, 527
Maximum energy test (fuses), 161–162
Maximum interrupting current, 576
Maximum short-circuit temperature, 293–295
MCC (motor control center), 579
MCCB (molded-case circuit breaker). *See* Low-voltage circuit breaker
MCOV (maximum continuous operating voltage), 96, 526, 527
Mechanical dashpot trip unit, 203, 205
Mechanical protection (motors), 371–372
Medium generator protection scheme, 510–511
Medium-voltage bus differential protection, 519–525
Medium-voltage motor system. *See* Motor, three-phase integral horsepower
Medium-voltage protection (motors)
  faults, 361–369
  generally, 358
  overcurrents, 358–361
Melting time, defined, 132
Metal-oxide surge arrestors, 526, 527
Metering burden of current transformers (CTs), 52
Mho distance relay, 73–74, 478
Mho-supervised reactance relay, 74
Micro fuse, 137
Mine duty fuse, 162–164
Miniature fuse, 137
Minimum ground pickup, 256
Minimum-melting time-current characteristic (TCC) curves
  high-voltage current-limiting power fuses, 187
  high-voltage solid-material power fuses, 188
Miscoordination of protective devices, 354–355
Molded-case circuit breaker (MCCB). *See* Low-voltage circuit breaker
Momentary application calculations, 18, 576
Monitoring device
  motors, 369–378
  transformers, 407–408
Motor, three-phase integral horsepower
  abnormal power supply conditions, 344–347
  accelerometers, 374
  ac magnetically held main contactor, 346–347
  ambient conditions, 341
  automatic reclosing protection, 386–388
  automatic transfer protection, 386–388
  auxiliary timers, 249
  bearings, 371
  cable circuits and, 321
  characteristics, 339–340
  circuit protectors, 193–194, 263, 353–354, 355
  controllers, 343

Copyright © 2001 IEEE. All rights reserved.

Copyright The Institute of Electrical and Electronics Engineers, Inc.
Provided by IHS under license with IEEE
No reproduction or networking permitted without license from IHS
Not for Resale

conventional phase differential overcurrent relay, 362, 363
cooling systems, 372
damper winding protection, 379
dc magnetically held main contactor, 347
diagnostic systems, 378–379
differential protection, 109
driven equipment, 341–342
dual-element fuses, 352–353
electronic overload relays, 351–352
excessive shaft torques protection, 388–389
excessive starting protection, 381
excitation voltage availability, 380
failure to rotate protection, 389–390
fault protection, 361–369
field-current failure protection, 379–380
fire detection, 372
ground-fault protection, 354–356, 367–369
ground faults, 343
high-resistance-grounded systems, 356
importance of, 342–343
incomplete starting sequence protection, 381
instantaneous ground-fault protection, 367
instantaneous phase unbalance protection, 349
instantaneous trip circuit breakers, 353–354, 355
instantaneous undervoltage protection, 345–346
insulation, 372
inverse-time circuit breakers, 353
latching contactors or circuit breakers, 346
lightning protection, 382–385
liquid detectors, 372
load-side faults, 343
locked-rotor protection, 354, 361, 363, 389–390
low-resistance-grounded systems, 356, 368–369
low-voltage systems, 339, 350–358
lubrication, 371
maintenance, 343
mechanical protection, 371–372
medium-voltage fault protection, 361–369
medium-voltage overcurrent protection, 358–361, 362, 363
medium-voltage systems, 339, 358
monitoring devices, 369–378
multifunction relay, 350, 381
overcurrent differential protection, 361–365
overcurrent protection, 157–159, 349–354, 358–361, 364–365, 581–583, 584–586, 596, 600–601
overexcitation from shunt capacitance protection, 385–386
overheating, 347–348
overload protection, 350–354
partial discharge detectors, 372
phase unbalance protection, 347–349
power system quality, 342
protection generally, 339–344
proximity transducers, 373–374
pullout protection, 380
relays, 249
residually connected current transformers (CTs) and ground-fault relays, 368
resistance temperature detectors (RTDs), 357, 369–370
reverse rotation, 390
rotor winding overtemperature protection, 370–371
rotor winding protection, 382
self-balancing differential protection, 364–365
sequence impedances, 23
service factor, 343
short-circuit protection, 350, 583
single phasing, 248
solidly grounded systems, 354–355
split winding protection, 365–366
starter short-circuit protection, 155–156
starting conditions, 341
starting inrush, tripping on, 249
stator winding overtemperature protection, 356, 369–370
surge protection, 382–385

Copyright © 2001 IEEE. All rights reserved.

Copyright The Institute of Electrical and Electronics Engineers, Inc.
Provided by IHS under license with IEEE
No reproduction or networking permitted without license from IHS
Not for Resale

temperature bulbs, 370
thermal overload relays, 351–352
thermistors, 357, 370
thermocouples, 370
thermostats, 356, 370
time-delay fuses, 352–353
time-delay phase unbalance protection, 349
time delay to clear faults, 249
time-delay undervoltage protection, 345, 346
time-overcurrent ground-fault protection, 367
transducers, 373–376
undervoltage protection, 344–347, 357–358
velocity transducers, 374
ventilation systems, 372
vibration monitoring, 372–379
vibrations, 372–373, 375, 379
voltage-sensing relays, 347
wound-rotor induction starting resistors, 371
Motor branch circuit diagram, 195
Motor circuit (minimum ground-fault protection), 263
Motor-circuit protection, 193–194, 263, 353–354, 355
Motor control center (MCC), 579
Motor overcurrent differential relay (Device 87), 361
Motor overload relay (motor branch circuits), 185
Motor starter
coordination with fuses, 194, 195
short-circuit protection, 155–156
Multifunction relay (motors), 350, 381
Multiple-isolated generator, 442
Multiratio bushing, 49, 57–60

N

National Electrical Code® (NEC®) (NFPA 70-1999)
buses and switchgear, 518
conductors, 285, 308–309, 310, 318, 324–325
generally, 2, 99
ground faults, 231, 265, 276
high-voltage fuses, 191
low-voltage circuit breakers, 199, 200, 201, 214, 219
low-voltage fuses, 130, 132, 138, 155, 157, 159
motors, 352, 353, 354, 356
overcurrent coordination, 581, 583, 587, 618, 622, 626
service supply lines, 552, 560
testing, 688
transformers, 416, 419
National Electrical Safety Code® (NESC®) (Accredited Standards Committee C2-2002), 2
Nationally recognized testing laboratory (NRTL), 343
NEC dimensions, 132
Negative-phase-sequence overcurrent relay (Device 46)
large generators, 511
medium generators, 510
Negative-sequence
equivalent circuit, 27
impedance, 22–32, 347–348
network, 28–32
overcurrent relay (Device 46), 349
phasors, 21
reactance, 22–32
relay, 88–89, 481–484
voltage, 22–32
voltage relay (Device 47), 349
Negative temperature coefficient, 357
NESC® (National Electrical Safety Code®) (Accredited Standards Committee C2-1997), 2
Network interconnection, 28–32
Network protection (transformers), 433–434
Neutral grounding device, sequence impedance of, 28
Nominal system voltage, 51
Nonadjustable trip unit, 204
Nonlatching motor starter, 345

Copyright © 2001 IEEE. All rights reserved.

Copyright The Institute of Electrical and Electronics Engineers, Inc.
Provided by IHS under license with IEEE
No reproduction or networking permitted without license from IHS
Not for Resale

Nonlinear electrical load (transformers), 413–415
Nonmotor circuit (minimum ground-fault protection), 262
Normal bus fault, 44
Normal current-carrying capacity (cables), 307–310
Normal loading temperature, 310
Numbers for protective devices, 68, 69, 344

O

Odd-order harmonics (transformers), 414
Offset-fault current, 522
Offset mho distance relay (generators), 478, 479
Offsetting dc transient, 14–15, 448
Ohm's Law, 11–12
Oil, tank (transformers), 397–398
Oil-cooled preservation system (transformers), 396
Oil pressure (generators), 490
One-time fuse, defined, 132
Open-delta connected current transformer (CT), 56
Open phase (short circuits), 32
Open ventilated transformer, 395
Operation indicator, 381
Overcurrent backup protection (generators), 494–498
Overcurrent coordination
  conductors, 581, 582
  coordination time intervals (CTIs), 576, 596, 602–604, 605
  current transformer (CT) saturation, 580
  delta-wye transformers, 577
  electromechanical relays, 578
  example, 608–626
  fuses, 579, 596
  generally, 575–576, 580–581, 607–608
  generators, 587–589
  ground faults on low-voltage systems, 626–627, 628–631
  load flow currents, 577
  low-voltage power circuit breakers (LVPCBs), 578, 596, 597, 598, 599
  molded-case circuit breakers (MCCBs), 579
  motor control centers (MCCs), 579
  motors, 157–159, 349–354, 358–361, 364–365, 581–583, 584–586, 596, 600–601
  overload, 584–586
  phase faults on small substations, 627, 632, 633–635
  pickups, 578–579, 593
  planning stage, 604–607
  primary device, 579
  short-circuit currents, 576–577
  static relays, 578
  time-current characteristic (TCC) plots, 583, 590–596, 597–601
  transformers, 583, 587, 588, 589
Overcurrent differential protection (motors), 361–365
Overcurrent differential relay (Device 87), 108–109, 361
Overcurrent protection
  low-voltage motors, 350–354
  medium-voltage motors, 358–361, 362, 363
Overcurrent ratio curves (CTs), 53–54
Overcurrent relay. *See also individual types*
  buses, 517–518
  cables, 319–320
  generally, 92, 94–96
  service supply lines, 570
  transformers, 416–417, 426–427
Overexcitation from shunt capacitance protection (motors), 385–386
Overexcitation protection
  generators, 485–487
  transformers, 413
Overfrequency relay, 105–106
Overhead distribution cutout, 176–177
Overheating
  generators, 441
  motors, 347–348
  transformers, 408, 414
Overload, defined, 132
Overload devices, 232
Overloading, transformers), 191–192, 415–418

Copyright © 2001 IEEE. All rights reserved.

Copyright The Institute of Electrical and Electronics Engineers, Inc.
Provided by IHS under license with IEEE
No reproduction or networking permitted without license from IHS
Not for Resale

Overload protection
busways, 333
generators, 454–455
motors, 350–354
transformers, 191–192, 415–418
Overload protection (cables)
ampacity, 308–309
bimetallic devices, 320
cable circuit to motors, 321
cable current, 310
cable temperature, 310
coordination of devices, 321
direct buried cables, 318, 322
emergency loading temperatures, 311, 315, 316, 317, 318
examples, 299, 300
feeder circuits to panels, 320–321
feeder circuits to transformers, 321
frequency derating factor, 310
frequency relays, 104–107, 557–558
fuses, 320
generally, 307–321
grouping derating factor, 309–310
harmonic derating factor, 310
heat flow, 307–308
intermediate zone, 310–312, 319
long-time zone, 310–312
magnetic trip devices, 320
normal current-carrying capacity, 307–310
normal loading temperature, 310
overcurrent relays, 319–320
overload capacity, 310–319
protective devices, 319–321
short-time temperatures, 318
static sensors, 320
temperature derating factor (TDF), 309
temperature rise, 312
temperatures, 312–318
thermal magnetic trip devices, 320
thermal overcurrent relays, 320
thermal resistance, 307–308
time-current characteristics (TCCs), 319
Overload test, 159–160
Overtravel (inertia), 80–81, 92–93
Overvoltage protection
buses, 96
cables, 286
generators, 490–491
synchronous motors, 345
transformers, 435–437
Overvoltage relay (Device 59), 96–97

P

Pad-mounted transformer, 192
Partial differential relay (buses), 520, 524–525
Partial discharge detectors (motors), 372
Peak arc voltage, defined, 170–171
Peak let-through current
current-limiting fuses, 171, 172
low-voltage circuit breakers, 217–218
low-voltage fuses, 130, 132, 152, 153
Percentage differential relay (Device 87T, 87B, 87M, or 87G), 109–115, 460, 520–522, 523
Percent insulation level (%IL) (cables), 286–287
Periodic monitoring devices, 378
Periodic online diagnostic systems, 378
Permissive functions of overvoltage relays, 81
Permissive transfer trip relaying system, 552
Phase-angle window, 77–80
Phase balance current relay (Device 46), 87–89, 349
Phase comparison relaying systems, 552
Phase designation, 20
Phase differential relay
motors, 362, 363
transformers, 427–432
Phase-fault current, 288–289
Phase-fault protection (generators), 459–465, 492–498
Phase instantaneous overcurrent relays (transformers), 426–427
Phase-overcurrent protection, 216–217
Phase-sequence voltage relay (Device 47), 89
Phase time overcurrent relay (transformers), 426

Copyright © 2001 IEEE. All rights reserved.

Copyright The Institute of Electrical and Electronics Engineers, Inc.
Provided by IHS under license with IEEE
No reproduction or networking permitted without license from IHS
Not for Resale

Phase-to-ground fault
  calculating, 42
  example, 43
  sequence interconnections, 31
Phase-to-ground short circuit, 31–32
Phase-to-neutral voltages, 21
Phase-to-phase fault (sequence interconnections), 30
Phase-to-phase short circuit, 30–31
Phase unbalance protection (motors), 347–349
Phasor, 21, 250, 519
Pickup voltage, 97, 191, 213–214, 578–579, 593
Pilot brush, 474, 475
Pilot relay (Device 87L) (service supply lines), 552, 554
Pilot wire differential relay (Device 87L), 116–119, 552
Planning system protection, 4–5, 67
Plug fuse
  defined, 132
  documentation, 137
  interrupting ratings, 145
Plug-in busway, 328, 329, 330
Plunger instantaneous relay, 93, 94, 97
Polarity, 54–55, 64
Polarization index test (insulation), 688
Pole rating (circuit breakers), 201, 204, 205
Portable cable, 323
Portable monitoring devices, 378
Positive-pressure inert gas (transformers), 396, 397
Positive-sequence
  equivalent circuit, 27
  impedance, 22–32
  networks, 28–32
  phasors, 21
  reactance, 22–32
  voltages, 22–32
Positive temperature coefficient, 357
Potential transformer. *See* Voltage transformer
Power cable. *See* Cable; Cable protection, insulated power
Power circuit breaker, low-voltage (LVPCB). *See* Low-voltage circuit breaker
Power factor (low-voltage circuit breakers), 221–224
Power factor relay (Device 55), 380
Power frequency withstand test (switchgear), 698
Power fuse. *See also* High-voltage fuse
  current-limiting, 177–178
  distribution, 174–177
  distribution fuse cutouts, 175–177
  E rating, 174
  expulsion, 178–181
  fiber-lined expulsion, 178–181, 183–184
  generally, 173–174
  interrupting ratings, 176, 177–178, 179, 180, 181, 184–185
  minimum-melting time-current characteristic (TCC) curves, 187, 188
  new designs, 174, 181–183
  R rating, 174
  selectivity, 187–189
  self-triggering, 182
  solid-material expulsion, 178–181, 183–184, 188
  styles, 179, 180–181
  sulfur hexafluoride (SF_6), 182
  triggerable, 182–183
  vacuum, 181–182
Pre-arcing time, 132
Preliminary design of power systems, 5–7
Pressure relay (Device 63) (service supply lines), 555
Pressure-relief devices (transformers), 401–402
Pressure-vacuum bleeder valves (transformers), 397, 400–401
Pressure-vacuum gauges (transformers), 397, 400, 401
Primary-selective system, 186
Primary substation transformer. *See* Transformer protection
Primary winding, 47–49, 62
Product directional ground relay, 103

Copyright © 2001 IEEE. All rights reserved.

--`,,`,,`,,`,,`,,`---

Copyright The Institute of Electrical and Electronics Engineers, Inc.
Provided by IHS under license with IEEE
No reproduction or networking permitted without license from IHS
Not for Resale

Protective device (relay). *See also individual types*
basic, 7–8
bimetallic overload, 320
busways, 332–336
cables, 319–321
conductors, 296–297
coordinating, 219–221
electromechanical operating principle, 67, 70
function numbers, 68, 69, 344
generally, 8, 67–69
low-voltage (ground faults), 247–248
magnitude of short circuits, 17
operation indicators, 381
short-circuit currents, 15–19, 290, 295–307, 308
static relay operating principle, 67, 70
zones of protection, 69–70
Protective schemes
descriptions for service supply lines, 547–558
examples for service supply lines, 558–571
ground faults, 249–255
Proximity transducers (motors), 373–374
Pullout protection (motors), 380
Pulsing contactor, 275
PURA (Public Utilities Regulatory Act), 443

R

Radial system, simple, 186
Reactance distance relay, 71–72
Reactance grounding (generators), 453, 471
Reactances and conductor protection, 288
Reactive component of impedance, 18, 19
Reactive relay (generators), 480–481
Reactor bypass, 197
Reclosing, automatic (motors), 386–388
Relay, protective. *See also individual types*
device function numbers, 68, 69
electromechanical operating principle, 67, 70
generally, 8, 67–69
magnitude of short circuits, 17
static relay operating principle, 67, 70
zones of protection, 69–70
Relayed circuit breaker. *See* Low-voltage circuit breaker
Relaying burden of current transformers (CTs), 52
Relaying devices for ground faults, 248–249
Reliability considerations when designing power systems, 3
Remote backup protection, 69
Remote relay, 207
Renewable fuse, defined, 132
Replica temperature relay, 90, 412
Residually connected protection against ground faults, 249–250, 368
Residual magnetism, 522
Resistance-grounded system, 224, 526
Resistance temperature detector (RTD), 90, 357, 369–370, 454, 455
Resistance tests of circuit breakers, 685
Resistive component of impedance, 18, 19
Resistor
buses, 522
generators, 442, 452–454, 469, 472, 474
ground-fault protection, 235–236, 238, 269–271
motors, 356, 368–369, 371, 379, 382, 389
Restraint differential relaying. *See* Fixed percentage differential relay
Reverse-power relay (Device 32)
generally, 83–84, 85
generators generally, 480–481, 488–489
medium generators, 510
motors, 387–388
small generators, 509
Reverse rotation (motors), 390
Reverse var relay (Device 40) (generators), 509
Rotating exciter (generators), 446–447
Rotation conventions, 20
Rotor field current (generators), 473–476
Rotor (generators), 459
Rotor winding overtemperature protection (motors), 370–371
Rotor winding protection (motors), 382

Copyright © 2001 IEEE. All rights reserved.

Copyright The Institute of Electrical and Electronics Engineers, Inc.
Provided by IHS under license with IEEE
No reproduction or networking permitted without license from IHS
Not for Resale

RTD (resistance temperature detector), 90, 357, 369–370, 454, 455

S

Safety
  current transformers (CTs), 62
  of personnel, 641–643, 652, 659, 679
  in power system designs, 2
Sag, voltage, 538–539
Saturation, 61, 385, 580
Sealed tank (transformers), 395, 396–397, 400
Secondary circuit (CTs), 62
Secondary excitation characteristics (CTs), 53–54
Secondary fuse (VTs), 65
Secondary ground differential relay (Device 87TGN), 428, 429
Secondary-side short circuit, 418
Secondary substation transformer. *See* Transformer protection
Secondary surge arrestor, 526–527
Secondary winding (CTs), 47–49
Selectivity (selective coordination)
  generally, 132, 145
  high-voltage fuses, 187–189
  low-voltage circuit breakers, 210, 214, 219–221
  low-voltage fuses, 145–151
  motors, 355
  ratio tables, 147, 150
Self-balancing differential protection
  generators, 461–463
  motors, 364–365
Self-triggering fuse, 182
Semiautomatic synchronizing system, 506
Sensing devices for ground faults, 248–249, 255
Sequence impedance representation of electrical apparatus, 22, 28
Sequence interconnections, 30–32
Sequential tripping mode of protection (generators), 507, 509
Series-connected ratings, 218
Series connection (MCCBs), 217–218
Series connection test circuit, 218
Series tripping device (service supply lines), 549
Service continuity *vs*. equipment damage, 2–3
Service-entrance protection, 197, 552–554
Service factor (motors), 343
Service supply-line protection
  breaker failure relaying, 569–571
  bus and switchgear relaying, 558
  differential ground relays, 556
  directional overcurrent ground-fault relays, 553–554, 556
  directional overcurrent phase relays, 556
  directional phase-overcurrent relays, 553–554
  directional power relays, 556
  distance relays, 551–552, 556
  disturbance corrective measures, 544–546
  disturbances generally, 533, 535–536, 543–544
  dual service without transformer, 562–565
  dual service with transformer, 565–567
  feeder schemes, 556
  flicker, voltage, 540
  frequency relays, 557–558
  frequency variations, 541–542
  fused primary and low-voltage plant bus, 560–562
  fusible protective devices, 549
  generally, 531–536, 547–550, 550–552
  generator differential relays, 557
  generator neutral ground time overcurrent relays, 557
  ground-fault detector relays, 554
  Group A schemes, 550–552
  Group B schemes, 552–554
  Group C schemes, 554–555
  Group D schemes, 555–556
  Group E schemes, 556
  Group F schemes, 556–558
  Group G schemes, 558
  harmonic distortion, 542, 546
  in-plant generator schemes, 556–558

Copyright © 2001 IEEE. All rights reserved.

Copyright The Institute of Electrical and Electronics Engineers, Inc.
Provided by IHS under license with IEEE
No reproduction or networking permitted without license from IHS
Not for Resale

instantaneous overcurrent relays, 551, 553, 554
interruption, voltage, 541
long-time voltage variations, 536–538
network supply systems below 600 V, 558–560
pilot relays, 552, 554
pressure relays, 555
protective scheme descriptions, 547–558
protective scheme examples, 558–571
quality of service, 533, 544
reliability issues, 533
restoration of service after voltage loss, 548
sags, voltage, 538–539
series tripping devices, 549
service-entrance schemes, 197, 552–554
service reliability, 554
short-circuit current, 542–543
single service with in-plant generation, 567–569
single service with transformer, 562, 563
spot networks, 558
supply-transformer schemes, 554–555
swells, voltage, 539–540
time overcurrent phase relays, 555
time overcurrent relays, 551, 553, 554
tolerances, electric service deviation, 533, 534–535
transformer differential relays, 554, 556
transformer neutral ground relays, 555
transformer oil temperature relays, 555
transformer secondary schemes, 555–556
transformer winding temperature relays, 555
transient voltage spikes, 540
unbalance, voltage, 540–541
underfrequency, 557
voltage-restrained overcurrent relays, 556
voltage variations, 536–541
SF_6. *See* Sulfur hexafluoride (SF_6)
Shaft torque, excessive (motors), 388–389
Sheath or shield temperature, 291–292
Short-circuit current
branch currents, 40–42, 44
calculating, 11–12, 19–20
calculation examples, 33–42
conductor temperature, 290–295
coordination time intervals (CTIs), 576
decay rates, 288–289, 290
defined, 133
equipment ratings, 290
generally, 13–15
ground-fault currents, 290
impedance, 11, 18, 22
magnitudes of, 11, 12–13, 15–19, 418
maximum, 289–290
minimum ratings (busways), 331
momentary currents, 576
negative-sequence impedance, reactance, and voltages, 22–32
negative-sequence networks, 28–32
offsetting dc transient, 14–15
overcurrent coordination, 576–577
per-unit calculations, 19–20
phase-fault currents, 288–289
phasors, 21
positive-sequence impedance, reactance, and voltages, 22–32
positive-sequence networks, 28–32
protection for cables, 288–307
protective devices, 15–19, 290, 295–307, 308
rate of decay, 17
service supply lines, 542–543
symmetrical ac current, 14–15
temperatures, 292
topography, 18
transformers, 418–435
types, 12–13
zero-sequence impedance, reactance, and voltages, 22–32
zero-sequence networks, 28–32
Short-circuit impedance, 18
Short-circuit power factor (low-voltage circuit breakers), 221
Short-circuit protection
cables, 288–307
generators, 444–451
motors, 350, 583
transformers, 418–435
Short-circuit test value (MCCBs), 225
Short-time current, 202, 210, 212–214
Short-time delay element, 207

Copyright © 2001 IEEE. All rights reserved.

Copyright The Institute of Electrical and Electronics Engineers, Inc.
Provided by IHS under license with IEEE
No reproduction or networking permitted without license from IHS
Not for Resale

Short-time mechanical rating, 51
Short-time test (insulation), 687–688
Short-time thermal rating, 51
Shunt capacitors, 385–386, 540
Shunt trip (low-voltage circuit breakers), 227
Shutdown protection (generators), 500–502
Silencer, 179
Simultaneous tripping mode of protection (generators), 507
Single-isolated generator, 441–442
Single-phase inverse time-undervoltage relay, 347
Single phasing (motors), 248
Single-point grounding, 265
Single-pole faults, 224
Single-pole-selective-pole relaying system, 552
Sinusoid, fault current, 17
Skin effect (transformers), 414
Sleeve bearing, 373, 375, 376
Small generator protection scheme, 509–510
Smoke detection, 372
Snuffler, 179
Solenoid instantaneous relay, 93, 94
Solidly grounded system
  buses, 526
  generators, 451–452
  ground-fault protection, 233–235, 241, 248, 267–269, 272, 273, 274, 290
  low-voltage circuit breakers, 224
  motors, 354–355
Solid-material expulsion power fuse
  generally, 178–181, 183–184
  minimum-melting time-current characteristic (TCC) curves, 188
Source power flow control of directional power relay, 83
Source transfer scheme of undervoltage relays, 81
Special protective equipment, 8
Split winding current unbalance device (Device 87), 365
Split winding protection (motors), 365–366
Spot networks, 273, 276–277, 278, 279, 558
Startup protection (generators), 500–502
Static directional overcurrent relay, 102–103
Static exciter (generators), 447
Static negative-sequence overcurrent relay (generators), 484
Static percentage differential relay, 113
Static pressure relay (transformers), 404
Static relay, 67, 70. *See also individual types*
Static sensors (cables), 320
Stationary exciter (generators), 446
Station surge arrestor, 526–527
Stator-fault protection (generators), 459–473
Stator thermal overcurrent relay (Device 49), 381
Stator winding overtemperature protection (motors), 356, 357, 369–370
Steady-state line switching protection (generators), 504
Steam turbine generator, 477, 487–490
Stepdown transformer, 96
Straight-rated circuit breaker, 225
Substation. *See* Bus protection; Transformer protection
Subtransient current, 289–290
Sudden gas/oil-pressure relay (transformers), 406–407
Sudden gas-pressure relay (transformers), 406
Sudden oil-pressure relay (transformers), 405–406
Sudden pressure relay (transformers), 404–405
Sulfur hexafluoride (SF_6)
  circuit breaker and load-interrupter switchgear, 679–682
  power fuse, 174, 182
Summation overcurrent relay (buses), 524–525
Supplemental fuse documentation, 137
Supply-line protection. *See* Service supply-line protection
Supply-transformer protection, 554–555
Surge arrester
  buses, 526–527
  coordination with fuses, 194, 196

Copyright © 2001 IEEE. All rights reserved.

--`,,`,,`-`-`,,`,,`,`,,`---

Copyright The Institute of Electrical and Electronics Engineers, Inc.
Provided by IHS under license with IEEE
No reproduction or networking permitted without license from IHS
Not for Resale

maximum continuous operating voltage (MCOV) ratings, 527
motors, 382–383
transformers, 435–436
Surge capacitor, 383, 436
Surge protection
buses and switchgear, 525–527
motors, 382–385
Swell, voltage, 539–540
Switchgear maintenance
acceptable conditions, defined, 640
access, 645
accessory parts, 699
adverse atmospheric conditions, 651
ambient temperature, 697
arc-control devices, 648, 655, 662, 670
auxiliary equipment, 657, 667, 689–694
auxiliary switches, 663
battery installations, 689–690
breakdown, defined, 640
breathers, 670–671
bus bars and bus bar compartments, 656, 666
cable terminations, 656
circuit breakers, 651
cleaning, 653–654, 660–661, 670
closing devices, 689
conductors, 646
connections, 656, 664, 695
contactors, 656, 664
contacts, 648, 654–655, 661–662
containment of faults, 644
control relays, 664
corrective maintenance, defined, 641
current transformers (CTs), 693
dashpots, 671
diagnostic testing, 641, 652–653, 682–689
dielectric absorption ratio test for insulation, 688
dielectric dissipation factor tan delta, 697
disconnects, 666
drawout switchgear, 659, 673
dust, 643, 695
electrical equipment, defined, 640
electrical preventive maintenance, defined, 640
electrical station, defined, 640
emergency action, defined, 640
emergency exits, 645
enclosure interior inspection, 700
equipment enclosures, 654
equipment-grounding connections, 694
equipment to be rendered inoperative, 652, 659, 699
examination, defined, 640
exposed face temperature check, 699–700
failure, defined, 640
field dielectric tests, 689, 690
fire extinguishing equipment, 644–645
first aid, 642
frequency, 648–651, 652, 675, 680, 699
fuses, 656, 659, 664
gas seals, 670
grounding equipment, 645–646
grounding switches, 665
ground mats, 646
hazardous gases, 646
heaters, 665
high-potential tests, 685–689, 698
high-voltage equipment, 643
high-voltage fuse connections, 667
indicating devices, 655, 663
indoor machinery, 651
industrial molded-case circuit breakers (MCCBs), 699–701
infrared detection, 685
injection tests, 695
inspections, 640, 653
insulating mats, stands, or screens, 646
insulating oil, 650, 671–672, 673
insulation, 654, 661, 670, 685, 687–688, 696–698
insulation power factor, 697
insulation-resistance tests, 685–689, 698
interlocks, 655, 663
internal insulation, 648
interpole barriers, 655, 662
interpole linkages, 671
isolators, 665
item, defined, 640
joints, 673
labels, 647
laminated insulation, 698

Copyright © 2001 IEEE. All rights reserved.

Copyright The Institute of Electrical and Electronics Engineers, Inc.
Provided by IHS under license with IEEE
No reproduction or networking permitted without license from IHS
Not for Resale

lifting devices, 694
lift rods, 697
lighting, 645
maintenance, defined, 640
major overhaul, defined, 641
materials susceptible to deterioration, 697
mechanisms, 649, 655, 662–663, 671, 676
minor overhaul, defined, 641
minor overhaul or servicing, defined, 641
moisture, 643
newly commissioned equipment, 648
nonroutine maintenance, defined, 641
oil handling plant, 694
oil switchgear, 669–675
opening devices, 676
operating voltages, 683
operational check, 641, 660, 680
outdoor machinery, 651, 685
overhaul, defined, 641
polarization index test for insulation, 688
porcelain insulation, 698
portable electric tools, 647
post-fault maintenance, 641, 649, 657, 667, 673, 677, 680–681
power frequency withstand tests, 698
preventive maintenance, 641, 700–701
primary cell batteries, 693
protective apparatus, 694–696
record keeping, 649, 697
relay, 696
removable switchgear, 659
repair, defined, 641
replacement parts, 694
resistance tests of circuit breakers, 685
routine maintenance, 641, 649, 680
routine tripping tests, 695
safety of personnel, 641–643, 652, 659, 679
safety rules, 642–643
seals, 673
secondary cell batteries, 691–692
secondary wiring, 664
semiconductors, 695
short-time test for insulation, 687–688
shutters, 659, 666
signs, 647
solenoid-closed switchgear, 659
spring-closed switchgear, 659
step-voltage test for insulation, 688
stored energy, 646
stored energy devices, 659
sulfur hexafluoride (SF_6) circuit breaker and load-interrupter switchgear, 679–682
tanks, 672
test, defined, 641
time-resistance test for insulation, 688
time-travel test, 683
timing test, 683
tripping devices, 659, 689
tripping tests, routine, 695
utility rules, 643
vacuum circuit breaker switchgear, 675–678
vacuum interrupters, 676
venting system, 670
for voltages above 1000 V ac and 1200 V dc, 659–669
for voltages up to 1000 V ac and 1200 V dc, 652–658
voltage transformers (VTs), 693–694
weather shields, 666
Switchgear protection, 558
generally, 515–517, 525
surges, 525–527
Symmetrical ac current, 14–15, 448
Symmetrical components method of analysis, 19–22
Synchronism check (sync-check) relay, 74–79, 389
Synchronizing protection (generators), 504–506
Synchronizing relay. *See* Automatic synchronizing relay
Synchronous motor
brush, 370–371, 389, 390
brushless, 379, 389
damper winding protection, 379
excitation voltage, 85, 380
field-current failure protection, 379–380
harmonic currents, 542
incomplete starting sequence, 381
locked-rotor protection, 389–390

Copyright © 2001 IEEE. All rights reserved.

Copyright The Institute of Electrical and Electronics Engineers, Inc.
Provided by IHS under license with IEEE
No reproduction or networking permitted without license from IHS
Not for Resale

overvoltage protection, 345
phase unbalance protection, 347–348
pullout protection, 380
rotor winding overtemperature protection, 370–371
rotor winding protection, 382
service supply lines, 545
voltage sags, 539
System backup protection (generators), 492–498
System protection
using high-voltage fuses, 185–189
using low-voltage circuit breakers, 216–219

T

Tap
changer failure (transformers), 393–394
pilot wire differential relay (Device 87L), 119
time-overcurrent relays, 94–95, 97
TCC. *See* Time-current characteristic (TCC)
TDF (temperature derating factor), 309
Temperature bulbs, 370
Temperature coefficient, 354
Temperature (conductors), 293–294
Temperature-controlled transformer, 395, 396
Temperature-current-time curve (conductors), 292–293, 294
Temperature derating factor (TDF), 309
Temperature rating, maximum short-circuit, 292, 293, 294
Temperature relay (Device 49) (generators), 511
Temperature rise
conductors, 290–292, 302
overload protection, 312
shield and sheath, 291–292
Temporary overvoltage (TOV), 526
Tertiary winding overcurrent relays (transformers), 427
Testing
busways, 336
circuit breakers (resistance), 685
dc low-voltage fuses, 159–165
dc high potential, 118
dielectric dissipation factor tan delta, 697
insulation, 336, 687–688, 698
interrupting ability (fuses), 160–161
maximum energy, 161–162
overload (fuses), 159–160
switchgear, 641, 652–653, 682–689, 690, 695, 698
Thermal burden limits (VTs), 64
Thermal-magnetic circuit breaker, 209
Thermal-magnetic trip molded-case circuit breaker (MCCB), 208, 320, 596, 598, 599
Thermal-magnetic trip unit, 203, 208, 209, 211–213, 320
Thermal overcurrent relay, 320, 381
Thermal overload relay (motors), 351–352
Thermal relay (Device 49), 89–90, 410, 411
Thermal resistance (cables), 307–308
Thermistor, 357, 370
Thermocouple, 370
Thermometer, 409, 410–412
Thermostat, 356, 370
Thevenin's Theorem (circuits), 11–12, 15
Third-harmonic overvoltage protection scheme (generators), 468
Thirty (30) cycle current, 17, 576
Three-phase current, calculating, 40–41
Three-phase fault, balanced (sequence interconnections), 30
Three-phase high-speed voltage relay (Device 27), 388
Three-phase integral horsepower motor. *See* Motor, three-phase integral horsepower
Three-phase undervoltage relay, 347
Threshold current, 133
Through-fault protection (transformers), 191, 419–423
Through iron-core current transformer (CT), 520
Thyristor, 542
Time constant for dc circuits, 160, 164
Time-current characteristic (TCC)
ac fuses *vs*. dc fuses, 159
cable protection, 296–297, 301, 319

Copyright © 2001 IEEE. All rights reserved.

Copyright The Institute of Electrical and Electronics Engineers, Inc.
Provided by IHS under license with IEEE
No reproduction or networking permitted without license from IHS
Not for Resale

current-limiting fuses, 171, 172
expulsion fuses, 173
low-voltage circuit breakers, 210–216
low-voltage fuses, 145–147, 150
overcurrent coordination, 583, 590–596, 597–601, 629–631, 633–635
Time delay, defined, 133
Time-delay electromechanical relay, 82
Time-delay fuse, 148, 160, 352–353
Time-delay overcurrent relay, 91–93
Time-delay overvoltage relay (Device 59GN), 466–469
Time-delay phase unbalance protection (motors), 349
Time delay to clear fault (motors), 249
Time dial, 592–593
Time overcurrent ground-fault protection (motors), 367
Time overcurrent phase relay (Device 51) (service supply lines), 555
Time overcurrent relay (Device 50, 51, 50/51 or variations)
buses, 518
current transformers (CTs), 55
generally, 90–96, 592–595
generators, 464, 481–484, 492–494
motors, 349–350
service supply lines, 551, 553, 554
through-fault protection, 420–421, 424
Time-resistance test (insulation), 688
Timer (motors) (Device 62), 381, 387
Time-travel test (switchgear), 683
Time-undervoltage relay, 81, 82–83
Timing applications of undervoltage relays, 81
Timing test (switchgear), 683
Top oil temperature indicators (transformers), 408–410
Toroidal current transformer (CT), 364, 521
Total clearing time, 133
Total-clearing time-current characteristic (TCC) curves (high-voltage solid-material power fuses), 190
Total fault-clearing time (conductors), 295–296
Totally enclosed and nonventilated transformer, 395
TOV (temporary overvoltage), 526
Transducers (motors), 373–376
Transfer, automatic (motors), 345, 386–388
Transformer. *See individual types*; Transformer protection
Transformer differential relay (Device 87T) (service supply lines), 554
Transformer isolation, 266
Transformer neutral ground relay (Device 51TN) (service supply lines), 555
Transformer oil temperature relay (Device 26) (service supply lines), 555
Transformer protection
bushing failure, 394
Category I, 420
Category II, 420–421, 422
Category III, 420–421, 422, 423
Category IV, 421, 424
circuit breakers, 417–418
conservator tank, 396, 398, 399
current-interrupting devices, 415
current-sensing devices, 419–433
differential relays, 427–433, 434, 435
direct-connected generators, 413
dissolved fault-gases detection relays, 407–408
dry preservation systems, 395–396, 436
eddy currents, 414
enclosed and nonventilated, 395
environmental hazards, 437–438
ferroresonance, 436–437
filtered ventilated, 395
forced-air cooling, 412
fused switches, 417–418
fuses, 156–157, 158, 413, 417–418, 423–425
gas-accumulator relays, 402
gas-analysis equipment, 408
gas-detector relays, 403
gas-oil seal, 396, 397–398
gas-sensing devices, 418–419
generally, 393–395
ground differential relays, 432–433, 434, 435
harmonics, 413–414, 430, 432

Copyright © 2001 IEEE. All rights reserved.

--`,,`-`-`,,`,,`,`,,`---

Copyright The Institute of Electrical and Electronics Engineers, Inc.
Provided by IHS under license with IEEE
No reproduction or networking permitted without license from IHS
Not for Resale

hot-spot temperature thermometers, 410–412
hysteresis, 414
incipient fault monitor, 407
inrush current, 192, 193, 415, 424, 426, 427
inrush current, magnetizing, 157, 189–191, 405, 424, 430
K-factor rating, 414–415
liquid-level gauges, 398–400
liquid preservation system, devices for, 398–408
liquid preservation system designs, 395, 396–398, 399
liquid temperature indicators, 408–410
load limitation, 416
load-tap-changer failure, 394
networks, 433–434
no-load tap changer failure, 393
nonlinear electrical loads, 413–415
odd-order harmonics, 414
oil-cooled, 396
open ventilated, 395
overcurrent coordination, 583, 587, 588, 589
overcurrent relays, 413, 416–417, 426–427
overexcitation, 413
overheating, 408, 414
overloading, 191–192, 415–418
overvoltages, 435–437
phase differential relays, 427–432
phase instantaneous overcurrent relays, 426–427
phase time overcurrent relay, 426
positive-pressure inert gas, 396, 397
pressure-relief devices, 401–402
pressure-vacuum bleeder valves, 397, 400–401
pressure-vacuum gauges, 397, 400, 401
primary protective device, 415
replica temperature relay, 412
sealed tank, 395, 396–397, 400
sequence impedances, 26–28
short-circuit currents, 418–435
skin effect, 414
static pressure relays, 404
sudden gas/oil-pressure relays, 406–407
sudden gas-pressure relays, 406
sudden oil-pressure relays, 405–406
sudden pressure relays, 404–405
surge arresters, 435–436
surge capacitors, 436
temperature-indicating devices, 395, 396
terminal board failure, 393
tertiary winding overcurrent relays, 427
thermal relays, 410, 411
through-fault capability, 191, 419–423
top oil temperature indicators, 408–410
totally enclosed and nonventilated, 395
two-fuse concept, 192
using conservator tanks, 398, 399
using gas-oil seals, 397–398
using high-voltage fuses, 189–192
using low-voltage fuses, 156–157, 158
using positive-pressure inert gas, 397
using sealed tanks, 396–397
winding breakdowns, 393
winding temperature relays, 410
zero-sequence harmonics, 414
Transformer secondary protection, 555–556
Transformer winding temperature relay (Device 49) (service supply lines), 555
Transient currents, 14–15, 184
Transient voltage spike, 540
Transmission-line reclosing protection (generators), 504
Transmission line (sequence impedance), 23–26
Triggerable fuse, 182–183
Trip devices for ground faults, 248–249
Trip logic table (generators), 508
Trip-operating time, 247
Tripping incoming breaker, 105
Tripping scheme (generators), 506–509
Tripping tests (switchgear), routine, 695
Trip unit (circuit breakers), 203–216, 219
Tube, defined, 133
Turbine generator, 491–492
Turbine-trip oil system (generators), 490
Two-fuse protection (transformers), 192

Copyright © 2001 IEEE. All rights reserved.

Copyright The Institute of Electrical and Electronics Engineers, Inc.
Provided by IHS under license with IEEE
No reproduction or networking permitted without license from IHS
Not for Resale

U

UL standards for low-voltage fuses, 133–138
Unbalance, voltage, 540–541
Unbalanced current, 87, 481–484
Underfrequency relay, 104–105, 106, 386, 387, 492
Underground cable system, 322
Underrated equipment protection, 197
Undervoltage protection
  generators, 492
  motors, 344–347, 357–358
Undervoltage relay (Device 27), 80–83, 387
Undervoltage trip (low-voltage circuit breakers), 227
Ungrounded system, 238–240, 452, 526
Unidirectional offset current, 448
Uninterruptible power supply (UPS), 159, 165, 413, 536, 539, 540, 546
Unit generator-transformer generator, 443, 444
Unit separation tripping mode of protection (generators), 507

V

Vacuum power fuse, 174, 181–182
Valve limit switch (generators), 489–490
Variable percentage differential relay, 109, 110, 111, 112
Variable slope percentage differential relay (generators), 461
Var relay
  generally, 85, 86
  generators, 480–481
  operating characteristics, 86
Vee-connected current transformer (CT), 55, 56
Velocity transducers (motors), 374
Ventilation systems (motors), 372
Vibration monitoring (motors), 372–379
Visual inspection (busways), 336
Voltage balance relay (Device 60)
  generally, 97–98, 500
  large generators, 511
Voltage considerations for low-voltage circuit breakers, 224–226
Voltage-controlled relay, 95–96, 464, 492, 494–496
Voltage-dependent overcurrent relay, 95, 494–495
Voltage differential relay (buses), 520–522
Voltage rating
  defined, 133
  high-voltage fuses, 183–184
  low-voltage circuit breakers, 200–201
Voltage regulator (generators), 458–459
Voltage-responsive and linear coupler (buses), 520
Voltage-restrained overcurrent relay (Device 51V)
  generally, 95, 96
  generators, 464, 492, 494–497
  service supply lines, 556
Voltage-sensing relays (motors), 346, 347
Voltage surge. *See* Surge protection
Voltage-to-frequency limiter (generators), 486
Voltage-to-frequency ratio, 485–486
Voltage-to-frequency relay (generators), 486
Voltage transformer (VT), 62–65
Voltage transformer (VT), auxiliary, 100
Voltage transformer (VT) protection
  generators, 499–500
  using high-voltage fuses, 192–193
Voltage variation (service supply lines), 536–541

W

Wheatstone bridge principle, 90
Winding overtemperature device (motors), 356–357, 369–370
Windings (CTs), 47
Winding temperature (generators), 455
Winding temperature relay (transformers), 410
Window current transformer (CT)
  generally, 48, 250
  ground-fault protection (motors), 367

Copyright © 2001 IEEE. All rights reserved.

--`,,`-`-`,,`,,`,`,,`---

Copyright The Institute of Electrical and Electronics Engineers, Inc.
Provided by IHS under license with IEEE
No reproduction or networking permitted without license from IHS
Not for Resale

self-balancing differential protection for motors, 364–365
Wire protection, 155
Wound current transformer (CT), 47, 521
Wound-rotor induction motor, 382
Wound-rotor induction motor-starting resistors, 371
Wye-connected current transformer (CT), 55, 56

X

X/*R* ratio, 18

Z

Zero-sequence
current transformers (CTs), 55, 364, 367
equivalent circuit, 26, 28
harmonics, 414, 467
impedance, 22–32, 368–369
networks, 28–32
phasors, 21
reactance, 22–32
sensor, 250
voltages, 22–32
Zigzag transformer, 238, 453–454, 471, 472, 569
Zone selective interlocking (ZSI), 209–210, 247, 258–260, 261

Copyright © 2001 IEEE. All rights reserved.

Copyright The Institute of Electrical and Electronics Engineers, Inc.
Provided by IHS under license with IEEE
No reproduction or networking permitted without license from IHS
Not for Resale

Copyright The Institute of Electrical and Electronics Engineers, Inc.
Provided by IHS under license with IEEE
No reproduction or networking permitted without license from IHS
Not for Resale