IEEE Std 1625™-2004

IEEE Standards

1625™

Livium™

IEEE Standard for Rechargeable Batteries for Portable Computing

IEEE Power Engineering Society

Sponsored by the
Stationary Batteries Committee

IEEE

3 Park Avenue, New York, NY 10016-5997, USA

28 May 2004

Print: SH95227
PDF: SS95227

Copyright The Institute of Electrical and Electronics Engineers, Inc.
Provided by IHS under license with IEEE
No reproduction or networking permitted without license from IHS

Not for Resale

IEEE Standard for Rechargeable Batteries for Portable Computing

Sponsor

Stationary Batteries Committee
of the
IEEE Power Engineering Society

Approved 8 April 2004

IEEE-SA Standards Board

Abstract: Guidance for the designer/manufacturer/supplier in planning and implementing controls for the design and manufacture of lithium-ion (Li-ion) and lithium-ion polymer (Li-ion polymer) rechargeable battery packs used for portable computing is provided. This standard's provisions work together, and they define approaches to design, test, and evaluate a cell, battery pack, and host device to mitigate battery system failure in user environments. Additionally, this standard provides recommendations for end-user education and communication materials. This approach suggests the interfaces between subsystems (e.g., cell, battery pack, host device) and end users are as important to system reliability as is robust subsystem design and testing. This standard therefore includes subsystem interface design responsibilities for each subsystem designer/manufacturer/supplier, and it provides messaging and communication provisions for end-user awareness.
Keywords: battery, battery pack, cell, host device, lithium-ion (Li-ion), lithium-ion polymer (Li-ion polymer), notebook computer, pack, portable computer, portable computing, rechargeable battery, rechargeable battery packs

The Institute of Electrical and Electronics Engineers, Inc.
3 Park Avenue, New York, NY 10016-5997, USA

Copyright © 2004 by the Institute of Electrical and Electronics Engineers, Inc.
All rights reserved. Published 28 May 2004. Printed in the United States of America.

IEEE is a registered trademark in the U.S. Patent & Trademark Office, owned by the Institute of Electrical and Electronics Engineers, Incorporated.

Print: ISBN 0-7381-4011-2 SH95227
PDF: ISBN 0-7381-4012-0 SS95227

No part of this publication may be reproduced in any form, in an electronic retrieval system or otherwise, without the prior written permission of the publisher.

Copyright The Institute of Electrical and Electronics Engineers, Inc.
Provided by IHS under license with IEEE
No reproduction or networking permitted without license from IHS
Not for Resale

IEEE Standards documents are developed within the IEEE Societies and the Standards Coordinating Committees of the IEEE Standards Association (IEEE-SA) Standards Board. The IEEE develops its standards through a consensus development process, approved by the American National Standards Institute, which brings together volunteers representing varied viewpoints and interests to achieve the final product. Volunteers are not necessarily members of the Institute and serve without compensation. While the IEEE administers the process and establishes rules to promote fairness in the consensus development process, the IEEE does not independently evaluate, test, or verify the accuracy of any of the information contained in its standards.

Use of an IEEE Standard is wholly voluntary. The IEEE disclaims liability for any personal injury, property or other damage, of any nature whatsoever, whether special, indirect, consequential, or compensatory, directly or indirectly resulting from the publication, use of, or reliance upon this, or any other IEEE Standard document.

The IEEE does not warrant or represent the accuracy or content of the material contained herein, and expressly disclaims any express or implied warranty, including any implied warranty of merchantability or fitness for a specific purpose, or that the use of the material contained herein is free from patent infringement. IEEE Standards documents are supplied "**AS IS**."

The existence of an IEEE Standard does not imply that there are no other ways to produce, test, measure, purchase, market, or provide other goods and services related to the scope of the IEEE Standard. Furthermore, the viewpoint expressed at the time a standard is approved and issued is subject to change brought about through developments in the state of the art and comments received from users of the standard. Every IEEE Standard is subjected to review at least every five years for revision or reaffirmation. When a document is more than five years old and has not been reaffirmed, it is reasonable to conclude that its contents, although still of some value, do not wholly reflect the present state of the art. Users are cautioned to check to determine that they have the latest edition of any IEEE Standard.

In publishing and making this document available, the IEEE is not suggesting or rendering professional or other services for, or on behalf of, any person or entity. Nor is the IEEE undertaking to perform any duty owed by any other person or entity to another. Any person utilizing this, and any other IEEE Standards document, should rely upon the advice of a competent professional in determining the exercise of reasonable care in any given circumstances.

Interpretations: Occasionally questions may arise regarding the meaning of portions of standards as they relate to specific applications. When the need for interpretations is brought to the attention of IEEE, the Institute will initiate action to prepare appropriate responses. Since IEEE Standards represent a consensus of concerned interests, it is important to ensure that any interpretation has also received the concurrence of a balance of interests. For this reason, IEEE and the members of its societies and Standards Coordinating Committees are not able to provide an instant response to interpretation requests except in those cases where the matter has previously received formal consideration. At lectures, symposia, seminars, or educational courses, an individual presenting information on IEEE standards shall make it clear that his or her views should be considered the personal views of that individual rather than the formal position, explanation, or interpretation of the IEEE.

Comments for revision of IEEE Standards are welcome from any interested party, regardless of membership affiliation with IEEE. Suggestions for changes in documents should be in the form of a proposed change of text, together with appropriate supporting comments. Comments on standards and requests for interpretations should be addressed to:

Secretary, IEEE-SA Standards Board

445 Hoes Lane

P.O. Box 1331

Piscataway, NJ 08855-1331USA

NOTE—Attention is called to the possibility that implementation of this standard may require use of subject matter covered by patent rights. By publication of this standard, no position is taken with respect to the existence or validity of any patent rights in connection therewith. The IEEE shall not be responsible for identifying patents for which a license may be required by an IEEE standard or for conducting inquiries into the legal validity or scope of those patents that are brought to its attention.

Authorization to photocopy portions of any individual standard for internal or personal use is granted by the Institute of Electrical and Electronics Engineers, Inc., provided that the appropriate fee is paid to Copyright Clearance Center. To arrange for payment of licensing fee, please contact Copyright Clearance Center, Customer Service, 222 Rosewood Drive, Danvers, MA 01923 USA; +1 978 750 8400. Permission to photocopy portions of any individual standard for educational classroom use can also be obtained through the Copyright Clearance Center.

Copyright The Institute of Electrical and Electronics Engineers, Inc.
Provided by IHS under license with IEEE
No reproduction or networking permitted without license from IHS Not for Resale

Introduction

(This introduction is not part of IEEE Std 1625-2004, IEEE Standard for Rechargeable Batteries for Portable Computing.)

The Rechargeable Batteries for Portable Computing Working Group was formed to provide a platform based on the experience of industry leaders in cell, battery pack, and systems management, leading to design approaches for portable computing devices. The focus of the standard is on design approaches for reliable operation of portable computing devices and similar rechargeable battery-operated systems. This standard may be relevant to other devices but these were not expressly considered in its development.

Figure a presents the need for an approach involving all system components, including the user and environment. It is necessary to examine all design margins in combination to understand the effect of multiple fault response on the portable computing device. The standard addresses such questions as: What are the critical operational parameters and how do they change with time and environment? What are the effects of extremes in temperature, pressure, and impact? A total system view is required to protect the design margins in the various components. The goal of reliability and positive user experience require that design margins be maintained as user patterns, profiles, and duty cycles change.

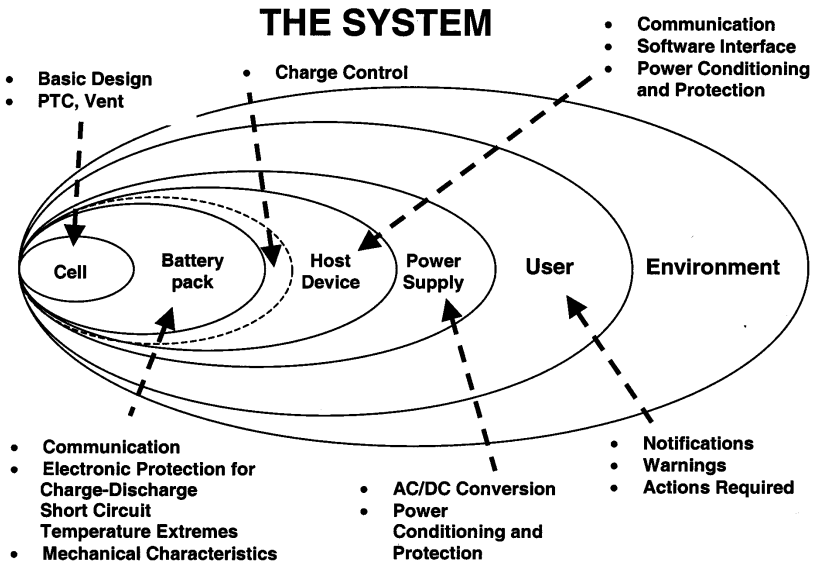

Figure a—Conceptual diagram of a mobile computing device and its user

This standard applies to rechargeable lithium-ion (Li-ion) and lithium-ion polymer (Li-ion polymer) batteries and battery packs for use in portable computing. Because of the nature of the interactions between the battery and the host device, a system approach must be used in developing an appropriate operating envelope for the system. The provisions of this standard are intended to provide considerations for design analyses to minimize the occurrence of failures leading to hazards.

This standard is a system level standard, as depicted in the conceptual diagram. Overall compliance is dependent on conformity to each and every subclause of the standard. Compliance with the standard cannot be achieved by any particular portable computing device or subsystem alone, without considering the conformity of all subsystems within the system as well as the user. It is incumbent upon the designers of the host device, battery pack, and cell to review thoroughly their designs, alone and in conjunction with other subsystems, to identify faults that could propagate hazards. Once it has been ascertained that the cell, battery pack, and host device all conform to all their particular subclause requirements, the overall system compliance is not finished until the designer completes a thorough design analysis [e.g., design failure mode

Copyright © 2004 IEEE. All rights reserved.

Copyright The Institute of Electrical and Electronics Engineers, Inc.
Provided by IHS under license with IEEE
No reproduction or networking permitted without license from IHS
Not for Resale

effect analysis (DFMEA)] to ensure their particular design does not allow two faults of any type to propagate a hazard.

Disclaimer

Compliance with the provisions of this standard does not imply compliance to the regulatory requirements that are applicable to cell, battery packs, and systems. Care must be used to observe and refer to the applicable regulatory requirements, as part of the intended design analyses, for this standard does not assure protection or safety. This standard sets forth recommendations for design analyses and certain testing procedures. The level of assurance for protection and safety resulting from applying this standard depends on the implementation by the manufacturer/supplier and the actions of the end user. Compliance with the standard does not guarantee safety in all circumstances.

Notice to users

Errata

Errata, if any, for this and all other standards can be accessed at the following URL: http://standards.ieee.org/reading/ieee/updates/errata/index.html. Users are encouraged to check this URL for errata periodically.

Interpretations

Current interpretations can be accessed at the following URL: http://standards.ieee.org/reading/ieee/interp/index.html.

Participants

At the time this standard was completed, the Rechargeable Batteries for Portable Computing Working Group had the following entity membership:

Battery-Biz, Inc.
Compal Electronics, Inc.
Dell Inc.
Dynapack International Technology Corporation
FEDCO Electronics, Inc.
Hewlett Packard Company
IBM Corporation
Inventec Corporation
Matsushita Battery Industrial Co., Ltd./Panasonic
Motorola, Inc.
National Semiconductor
Quanta Computer, Inc.
Samsung Electronics Co., Ltd.
Sanyo Electric Co., Ltd.
Solectron Corporation
Sony Corporation
Texas Instruments, Inc.
Wistron Corporation

The following entity members of the balloting committee voted on this standard. Balloters may have voted for approval, disapproval, or abstention.

Battery-Biz, Inc.
Compal Electronics, Inc.
Dell Inc.
Dynapack International Technology Corporation
FEDCO Electronics, Inc.
Hewlett Packard Company
IBM Corporation
Matsushita Battery Industrial Co., Ltd./Panasonic
Motorola, Inc.
National Semiconductor
Quanta Computer, Inc.
Samsung Electronics Co., Ltd.
Sanyo Electric Co., Ltd.
Solectron Corporation
Sony Corporation
Texas Instruments, Inc.
Wistron Corporation

Copyright © 2004 IEEE. All rights reserved.
Copyright The Institute of Electrical and Electronics Engineers, Inc.
Provided by IHS under license with IEEE
No reproduction or networking permitted without license from IHS
Not for Resale

The working group gratefully acknowledges the contributions of the following organizations and participants. Without their assistance and dedication, this standard would not have been completed.

Organization	*Participant*
Battery Association of Japan	Kinya Fujimoto
Battery-Biz, Inc.	Wasi Khursheed
	Ophir Marish
Bourns	Tim Ardley
	Ernesto Romero
Compal Electronics, Inc.	C. T. Chuang
	Justin Wang
Danionics	Ulrik Grape
	Steen Heitmann
Dell Inc.	Jeff Layton, *Chair*
	Scott Ma
	Bruce Riggs, *Past Chair*
	Jay Taylor
Dynapack International Technology Corporation	J. J. Sheu
	Sy Tai
	Charlie Yang
Electrovaya	James Jacobs
E-One Moli Energy	Mark Reed
FEDCO Electronics, Inc.	Tom Santy
	Steve Victor
Fujitsu	Kazuaki Nimura
Hewlett Packard Company	John Obermeyer
	John Wozniak
IBM Corporation	Jim Dunbar
	Yoshiharu Kudoh
Intersil	Dean Henderson
	Jinrong Qian
	Jeff Sherman
Inventec Corporation	Joe Wang
Matsushita Battery Industrial Co., Ltd./Panasonic	Masunori Hamaguchi
	Kazunori Haraguchi
	Masaru Kawabe
	Takatoshi Matsumi
	Utsumi Mitsuo
	Charles Monahan
	Joji Nishimura
	Yorihito Ohana
	Tammy Yonehara
MicroPower Electronics	Katherine Mack
Motorola, Inc.	Jason Howard, *Vice Chair, Technical*
National Semiconductor	Trung Nguyen
Quanta Computer, Inc.	Fred Chen
Samsung Electronics Co., Inc.	Sung Hun Kim
	Mike Min, *Secretary*
	Charles Yun
Sanyo Electric Co., Ltd.	Joseph Carcone
	Tony Matsurua
	Ted Mino
	Kazuro Moriwaki
	Hideyuki Nagaya
	Morioka Toru
	Takiguchi Yosuhito
Solectron Corporation	Franki Choi

Copyright © 2004 IEEE. All rights reserved.

Copyright The Institute of Electrical and Electronics Engineers, Inc.
Provided by IHS under license with IEEE
No reproduction or networking permitted without license from IHS
Not for Resale

Sony Corporation	Kenji Enomoto
	Motohiko Fukuda
	Sage Nishimura
	Keiji Shionuma
	Jean Baronas, *Vice Chair, Procedures*
	Kazuya Kojima
	Elizabeth Toepfer
Texas Instruments, Inc.	Garry Elder
	Doug Williams
Wistron Corporation	Andrew Hsieh

The working group thanks the International Electrotechnical Commission (IEC) for permission to reproduce information from its International Standards IEC 61960-2 and IEC 62133. All such extracts are copyright of IEC, Geneva, Switzerland. All rights reserved. Further information on the IEC is available from www.iec.ch. IEC has no responsibility for the placement and context in whichthe extracts and contents are reproduced by IEEE; nor is IEC in any way responsible for the other content or accuracy therein.

The working group thanks the Society of Automotive Engineers of Japan, Inc. for permission to reprint Figure E.1, Figure E.2, and Figure E.3 from the article “On Temperature Rise in Passenger Compartment in Summer,” which originally appeared in the Journal of the Society of Automotive Engineers of Japan, Inc. [B12].

When the IEEE-SA Standards Board approved this standard on 8 April 2004, it had the following membership:

Don Wright, *Chair*
Steve M. Mills, *Vice Chair*
Judith Gorman, *Secretary*

Chuck Adams
H. Stephen Berger
Mark D. Bowman
Joseph A. Bruder
Bob Davis
Roberto de Boisson
Julian Forster*
Arnold M. Greenspan
Mark S. Halpin
Raymond Hapeman
Richard J. Holleman
Richard H. Hulett
Lowell G. Johnson
Hermann Koch
Joseph L. Koepfinger*
Thomas J. McGean
Daleep C. Mohla
Paul Nikolich
T. W. Olsen
Ronald C. Petersen
Gary S. Robinson
Frank Stone
Malcolm V. Thaden
Doug Topping
Joe D. Watson

*Member Emeritus

Also included are the following nonvoting IEEE-SA Standards Board liaisons:

Alan Cookson, *NIST Representative*
Satish K. Aggarwal, *NRC Representative*

Noelle D. Humenick
IEEE Standards Project Editor

Copyright © 2004 IEEE. All rights reserved.
Copyright The Institute of Electrical and Electronics Engineers, Inc.
Provided by IHS under license with IEEE
No reproduction or networking permitted without license from IHS
Not for Resale

Contents

1. Overview 1

1.1 Scope 1
1.2 Purpose 2

2. References 2

3. Definitions and other terms 3

3.1 Definitions 3
3.2 Other terms 5

4. System integration considerations 5

5. Cell considerations 6

5.1 Design process 6
5.2 General manufacturing considerations 7
5.3 Spiral winding process 8
5.4 Assembly precautions 9
5.5 Critical testing practices 10

6. Battery pack considerations 10

6.1 Marking the battery pack 11
6.2 Battery packs design guidelines 11
6.3 External short-circuit precautions 12
6.4 Overheating precautions 12
6.5 Overcharge precautions (consult overcharge and over-discharge definitions) 13
6.6 Over-discharge precautions 13
6.7 Overcurrent precautions 14
6.8 Mechanical stress precautions 14
6.9 Connector/terminal precautions 15
6.10 Other precautions 15
6.11 Assembly precautions 16
6.12 Precautions for cells connected in series and/or parallel to form a battery pack 17
6.13 Other relevant battery testing standards 17

7. Host device considerations 17

7.1 DC input voltage and current to the host device 18
7.2 Charging subsystem considerations 19
7.3 Mechanical considerations 23
7.4 Foreign objects 24
7.5 Design verification 24

Copyright © 2004 IEEE. All rights reserved.

Copyright The Institute of Electrical and Electronics Engineers, Inc.
Provided by IHS under license with IEEE
No reproduction or networking permitted without license from IHS
Not for Resale

8. Total system reliability considerations 24

8.1 Required communication to user 24
8.2 User alerts 26
8.3 Recommended communication to user 26
8.4 Marking and labeling 26

Annex A (Informative) Introduction to annexes 27

Annex B (Informative) Test methods for design verification 28

Annex C (Informative) Failure mode and effects analysis (FMEA) 42

Annex D (Informative) Double fault analysis 45

Annex E (Informative) Temperature environmental considerations 60

Annex F (informative) Bibliography 62

Copyright © 2004 IEEE. All rights reserved.

Copyright The Institute of Electrical and Electronics Engineers, Inc.
Provided by IHS under license with IEEE
No reproduction or networking permitted without license from IHS
Not for Resale

IEEE Standard for Rechargeable Batteries for Portable Computing

1. Overview

This standard is a guide for the manufacturer/supplier in planning and implementing the controls for the design and manufacture of lithium-ion (Li-ion) and lithium-ion polymer (Li-ion polymer) rechargeable battery packs used for portable computing.

This standard's provisions work together and they define approaches to design, test, and evaluate a cell, battery pack, and host device to mitigate battery system failure. Additionally, this standard provides recommendations for end-user education and communication materials. This approach suggests the interfaces between subsystems (e.g., cell, battery pack, host device) and end users are as important to system reliability as is robust subsystem design and testing. This standard therefore includes subsystem interface design responsibilities for each subsystem manufacturer/supplier, and it provides messaging and communication provisions for end-user awareness. Therefore, the responsibility for total system reliability is shared between the designers/manufacturer/suppliers of the subsystems and the end user. Compliance to this standard requires adherence to all the provisions of the standard.

1.1 Scope

This standard establishes criteria for design analysis for qualification, quality, and reliability of rechargeable battery systems for portable computing. It also provides methods for quantifying the operational performance of these batteries and their associated management and control systems, including considerations for end-user notification.

This standard covers rechargeable battery systems for mobile computing. The battery technologies covered are limited to Li-ion and Li-ion polymer, but future versions of this standard may include technologies that are not in general use at present. Also included are: battery pack electrical and mechanical construction; system, pack, and cell level charge and discharge controls; and battery status communications. The following are addressed: qualification process, manufacturing process control, energy capacity and demand management, levels of management and control in the battery systems, current and planned lithium-based battery chemistries, packaging technologies, and considerations for end-user notification.

Copyright © 2004 IEEE. All rights reserved.

Copyright The Institute of Electrical and Electronics Engineers, Inc.
Provided by IHS under license with IEEE
No reproduction or networking permitted without license from IHS
Not for Resale

1.2 Purpose

The purpose of this standard is to ensure reliable user experience and operation of batteries in portable computing environments. The battery industries need standardized criteria for design and qualification of rechargeable battery systems and for verifying the quality and reliability of those batteries.

This standard, and its accompanying annexes, provides no guarantee of protection or safety for battery users. This standard sets forth recommendations for design analyses and certain testing procedures. The level of assurance for protection and safety resulting from applying this standard depends on the implementation by the manufacturer/supplier and the actions of the end user. In the recommendations for design analyses contained herein, this standard contemplates reasonable intended use by the end user, but it does not provide a complete guarantee against hazards to the end user, such as fire, explosion, and leakage.

2. References

This standard shall be used in conjunction with the following publications. When the following specifications are superseded by an approved revision, the revision shall apply.

Guidance for Safe Usage of Portable Lithium-Ion Rechargeable Battery Pack, First Edition, March 2003, Battery Association of Japan.[1]

IEC 60050-486:1991, International Electrotechnical Vocabulary—Chapter 486: Secondary Cells and Batteries.[2]

IEC 61000-2-4:2002, Electromagnetic Compatibility (EMC)—Part 2-4: Environment—Compatibility Levels in Industrial Plants for Low-Frequency Conducted Disturbances.

IEC 61960-1:2000, Secondary Lithium Cells and Batteries for Portable Applications—Part 1: Secondary Lithium Cells.

IEC 61960-2:2001, Secondary Lithium Cells and Batteries for Portable Applications—Part 2: Secondary Lithium Batteries.

IEC 62133:2002, Secondary Cells and Batteries Containing Alkaline or Other Non-Acid Electrolytes—Safety Requirements for Portable Sealed Secondary Cells, and for Batteries Made from Them, for Use in Portable Applications, Annexes A and B.

ISO 3864-1:2002, Graphical Symbols—Safety colors and safety signs—Part 1: Design principles for safety signs in workplaces and public areas.[3]

UN ST/SG/AC.10/11/Rev.4-2003, Recommendations on the Transport of Dangerous Goods—Manual of Tests and Criteria, Fourth Revised Edition.[4]

---

[1]This publication is available from the Battery Association of Japan, Kikai Shinko-Kaikan, Suite 509, 5-8, Shibakoen 3-chome, Minato-ku, Tokyo 105-0011, Japan (http://www.baj.or.jp)(bajapan@hi-ho.ne.jp).

[2]IEC publications are available from the Sales Department of the International Electrotechnical Commission, Case Postale 131, 3, rue de Varembé, CH-1211, Genève 20, Switzerland/Suisse (http://www.iec.ch/). IEC publications are also available in the United States from the Sales Department, American National Standards Institute, 11 West 42nd Street, 13th Floor, New York, NY 10036, USA.

[3]ISO publications are available from the ISO Central Secretariat, Case Postale 56, 1 rue de Varembé, CH-1211, Genève 20, Switzerland/Suisse (http://www.iso.ch/). ISO publications are also available in the United States from the Sales Department, American National Standards Institute, 25 West 43rd Street, 4th Floor, New York, NY 10036, USA (http://www.ansi.org/).

[4]This publication available from United Nations Publications, Room DC2-853, 2 UN Plaza, New York, NY 10017, USA, or Publications des Nations Unies, Section des Ventes et Commercialisation, Bureau E-4, CH-1211 Geneva 10, Switzerland (http://www.un.org).

--`,,`,,`-`-`,,`,,`,`,,`---
Copyright © 2004 IEEE. All rights reserved.

Copyright The Institute of Electrical and Electronics Engineers, Inc.
Provided by IHS under license with IEEE
No reproduction or networking permitted without license from IHS
Not for Resale

UL 1642-1995, Lithium Batteries, Third Edition.[5]

UL 2054-2003, Household and Commercial Batteries.

WARNING
Some of the tests specified herein can be dangerous to the persons carrying them out. All appropriate measures to protect personnel against possible chemical or explosion hazards should be taken.

3. Definitions and other terms

For the purposes of this standard the following terms and definitions apply. If not defined in this clause, English words are used in accordance with their definitions in the latest editions of *Merriam-Webster's Collegiate Dictionary* [B10].[6] Electrical and electronic terms not defined in this clause or in the *Collegiate Dictionary* are used in accordance with their definitions in *The Authoritative Dictionary of IEEE Standards Terms*, Seventh Edition [B7].

3.1 Definitions

3.1.1 abuse: Use of product in a way that is not intended by the supplier but which may result from unreasonable or malicious human behavior or unreasonably extreme conditions or environments.

3.1.2 active charger: A charger that has a communication channel and interacts with the host device.

3.1.3 adapter: A device that transforms the available power from an external source (e.g., ac wall outlet, airline or automobile outlets) to the power used by the portable computing device.

3.1.4 battery/battery pack: An assembly of any number of Li-ion or Li-ion polymer cells, associated electronics, battery packaging, and connector(s).

3.1.5 cell: Basic manufactured Li-ion or Li-ion polymer unit providing a source of electrical energy by direct conversion of chemical energy that consists of electrodes, separators, electrolyte, container, and terminals, and that is designed to be charged electrically.

3.1.6 cell block: Unit of cells connected in parallel.

3.1.7 charger: A charger is a device that imposes a voltage and current in the proper polarity on a cell or battery to return the battery to a higher state of charge.

3.1.8 charging algorithm: The set of rules and decisions used to determine the voltages and currents applied to the cell, cells, and/or battery pack as a function of time, temperature, or other parameters.

3.1.9 critical: (A) Of, relating to, or being a turning point or an especially important juncture; (B) relating to or being a state in which or a measurement or point at which some quality, property, or phenomenon suffers a definite change.

NOTE—Critical limits, critical steps, traceability plans, etc., may be considered to be critical design factors and these parameters are determined by the manufacturer/supplier.

[5]UL standards are available from Global Engineering Documents, 15 Inverness Way East, Englewood, CO 80112, USA (http://global.ihs.com/).

[6]The numbers in brackets correspond to those of the bibliography in Annex F.

Copyright © 2004 IEEE. All rights reserved.

Copyright The Institute of Electrical and Electronics Engineers, Inc.
Provided by IHS under license with IEEE
No reproduction or networking permitted without license from IHS Not for Resale

3.1.10 design analysis: The evaluation of a design to determine correctness with respect to stated requirements, conformance to design standards, system efficiency, and other criteria, including consideration of system aging and usage over the life of the product.

3.1.11 design failure mode effects analysis (DFMEA): A detailed engineering examination of the design before it is put into production to determine the effect(s) of failure(s) of a component and a subsystem on the host device.

3.1.12 embedded controller: A programmable microprocessor that has a dedicated function to control specific components of the computer architecture independent of the main processor.

3.1.13 electrostatic discharge (ESD): Electrical discharges of static electricity that build up on personnel or equipment, generated by interaction of dissimilar materials. The discharge may damage sensitive components and render them inoperative.

3.1.14 failure mode: The manner in which failure occurs, generally categorized as electrical, thermal, and contamination. It can be associated with a defect or use outside of specification.

3.1.15 failure mode effects analysis (FMEA): The identification of significant failures, irrespective of causes and consequences. This includes, but is not limited to, electrical and mechanical failures that could conceivably occur under specified service and use conditions and their effect, if any, on adjoining circuitry or mechanical interfaces displayed in a chart, table fault tree, or other format.

3.1.16 fault: A physical condition that causes a device, a component or an element to fail to perform in the required manner, for example, a short circuit, broken wire and an intermittent connection, or a software error.

3.1.17 hazard: An undesirable result of one or more faults that include: a forceful rupture of the battery pack and/or projectile emission; fire or flame outside of the battery enclosure; noticeable quantity of smoke; release of toxic, corrosive, or dangerous materials in excess of recognized health and safety standards; electric shock that exceeds accepted standards; systems or components generating untouchable surfaces; and leakage of liquid outside of system enclosure.

3.1.18 host (host device): A device powered by a battery and/or charges the battery. Portable computers and external chargers are examples of host devices.

3.1.19 intended use: Use of a product in accordance with specifications, instructions, and information provided by the supplier.

3.1.20 manufacturer/supplier: An entity that designs and/or assembles and/or markets finished portable computing devices or a cell, battery pack, and/or system, as appropriate.

3.1.21 open circuit voltage (OCV) (cell or battery pack): The voltage at its terminals when no appreciable current is flowing.

3.1.22 overcharge: The forcing of a current through a battery pack after it has been fully recharged. Overcharge may damage the normal operation of the cell or battery and/or induce a hazard.

3.1.23 overcurrent: A situation where the current to or from a cell or battery pack exceeds the manufacturer/supplier/suppliers rating or specifications. Overcurrent may damage the normal operation of the cell or battery and/or induce a hazard.

3.1.24 over-discharge: The forcing of current through a battery pack after it had been fully discharged. Over-discharge may damage the normal operation of the cell or battery and/or induce a hazard.

Copyright © 2004 IEEE. All rights reserved.

Copyright The Institute of Electrical and Electronics Engineers, Inc.
Provided by IHS under license with IEEE
No reproduction or networking permitted without license from IHS Not for Resale

3.1.25 overvoltage: A situation where the voltage of a cell or battery pack exceeds the manufacturer/supplier rating or specifications. Overvoltage may damage the normal operation of the cell or battery and/or induce a hazard.

3.1.26 passive charger: A charger that does not have a communication channel with the host device.

3.1.27 portable computer: A portable computing device consisting of a processor and various input and output devices, capable of executing software programs on direction, and powered by a battery or by a connection to an external power source.

3.1.28 portable computing device: A notebook, laptop, tablet computer with processor, memory storage and I/O devices that can be powered either by a battery or by a connection to the utility grid.

3.1.29 positive temperature coefficient (PTC): A PTC resistor is a component that has the characteristic of a sudden large increase in resistance when the device reaches a specified temperature and/or current.

3.1.30 product lifetime: The actual period from initial operation to retirement of a system, structure, or component.

3.1.31 reasonable and foreseeable misuse: Use of a product in a way that is not intended by the supplier but may result from reasonable and foreseeable human behavior.

3.1.32 risk priority number (**RPN):** A number calculated by multiplying severity, occurrence likelihood, and likelihood of not detecting the fault in an FMEA analysis. The scale is typically 1 through 5, with 5 being highest and 1 being lowest.

3.1.33 system: The combined cell, battery pack, host device, power supply or adapter, user, and environment.

3.2 Other terms

3.2.1 may: The word *may* indicates a course of action permissible with in the limits of the standard. See ISO/IEC Directive Part 2 [B8], Annex G.

3.2.2 shall: The word *shall* is used to indicate mandatory requirements strictly to be followed in order to conform to the standard. (The equivalent definition of ISO/IEC Directive Part 2 [B8]: Shall = is to; is required to; it is required that; has to; only...is permitted; it is necessary.)

3.2.3 should: The word *should* is used to indicate that among several possibilities one is recommended as particularly suitable without mentioning or excluding others; or that a certain course of action is preferred but not necessarily required; or that (in a negative form) a certain course of action is depreciated but not prohibited. (The equivalent definition of ISO/IEC Directive Part 2 [B8]: Should = is recommended that; ought to.)

4. System integration considerations

This clause sets forth provisions for conducting design analyses for cell, pack, and host devices and tying these together into an overall system level design analysis including the end user. The design analyses shall be conducted to minimize hazards from occurring as a result of one and two independent faults while in *intended use.* The design analysis shall also be conducted to minimize hazards from occurring due to *reasonable and foreseeable misuse.* Conditions beyond reasonable and foreseeable misuse are outside the scope

Copyright © 2004 IEEE. All rights reserved.

Copyright The Institute of Electrical and Electronics Engineers, Inc.
Provided by IHS under license with IEEE
No reproduction or networking permitted without license from IHS Not for Resale

of this standard. While design analyses should be thorough, it is not practical to address every single conceivable scenario. Such an approach would prove onerous, unrealistic, and overly burdensome.

Examples of design analyses methods include the following:

- FMEA
- Fault tree analysis
- Empirical and/or destructive testing
- Reviewing company service records for failure modes and/or trends
- Fishbone analysis
- Detailed and extensive design reviews
- Reviews of prior design issues to ensure they are not repeated
- Reviews of industry standards and test methodologies

The following four design analyses shall be developed: Analysis 1 (cell), Analysis 2 (battery pack), Analysis 3 (host device), and Analysis 4 (combined cell, battery pack, and host device working together as a system and including the end user). Analysis 4 shall include interactions between Analyses 1, 2, and 3, as noted in Annex B, Annex C, and Annex D.

The design analyses shall identify the following:

a) End-user responsibilities for reliable total system operation. See Clause 8 for information on the reliable total system operation.

b) Manufacturer/supplier responsibilities for independent and/or distributed control schemes for reliable total system operation.

5. Cell considerations

This clause describes the precautions and considerations to include in the analysis of designing, manufacturing, and testing of rechargeable Li-ion and Li-ion polymer cells over their useful life. The objective is to identify the precautions for the cell design to reduce latent problems to a minimum and to increase reliable user experience.

5.1 Design process

Critical design factors that require careful attention include aspects of the manufacturing process from mixing of the active materials to the final evaluation for product release.

5.1.1

Materials specifications shall be developed and identify and limit impurities to below critical limits. Use manufacturer/supplier’s specifications or documentation to ensure control of this criteria or process. Establish a verification process (e.g., ISO 9001) to ensure control

5.1.2

The thickness and choice of material quality of the separator shall prevent electrically conductive material from the penetrating separator and causing an internal short.

Copyright © 2004 IEEE. All rights reserved.

Copyright The Institute of Electrical and Electronics Engineers, Inc.
Provided by IHS under license with IEEE
No reproduction or networking permitted without license from IHS Not for Resale

5.1.3

Separator material should ensure internal resistance increases within separator pores (electrical conductivity shutdown) when cell temperature rises above its shutdown point. The shutdown point of the separator should be lower than the temperature where thermal runaway initiates.

5.1.4

The width of the separator shall be designed to be wider than either positive or negative electrodes.

5.1.5

The electrode and lead wire whose polarity is opposite to that of the cell case should be insulated from the cell case to prevent shorting in the event the cell is subjected to shock and/or vibration.

5.1.6

Vent design or mechanism and specifications should be designed to operate within a very close tolerance.

5.1.6.1

Vent activation should perform within design specification.

5.1.6.2

The vent should operate immediately when pressure increases to design level.

5.1.6.3

The vent should be designed to activate when the cell is exposed to excessive overcharge and other internal pressure stress conditions.

5.1.7

The manufacturer/supplier should incorporate an overcurrent protector such as a PTC resistor or other protective device with each cell in the event of external short and overcharge.

5.1.8

There shall be no damage to the cell container, and critical cell design elements, during welding and other operations. Use manufacturer/supplier's specifications or documentation to ensure control of this criteria or process. Establish a verification process (e.g., ISO 9001) to ensure control.

5.2 General manufacturing considerations

5.2.1

Critical material for cell production shall have detailed specifications and shall have an incoming material quality control plan to ensure conformance to specification. Use manufacturer/supplier's specifications or documentation to ensure control of this criteria or process. Establish a verification process (e.g., ISO 9001) to ensure control.

Copyright © 2004 IEEE. All rights reserved.

Copyright The Institute of Electrical and Electronics Engineers, Inc.
Provided by IHS under license with IEEE
No reproduction or networking permitted without license from IHS Not for Resale

5.2.2

All known and possible undesirable impurities in materials should be identified, specified, minimized, and controlled.

5.2.3

The appropriate electrode substrate material for the positive electrode and negative electrode shall be specified and verified by analysis. Use manufacturer/supplier's specifications or documentation to ensure control of this criteria or process. Establish a verification process (e.g., ISO 9001) to ensure control.

5.2.4

Coating and thickness of electrodes for the positive electrode and negative electrode shall be controlled to provide uniform thickness within tolerance set by cell specification. Use manufacturer/supplier's specifications or documentation to ensure control of this criteria or process. Establish a verification process (e.g., ISO 9001) to ensure control.

5.2.5

Burrs on any cut (slit) side of the electrodes or tab materials shall not exceed limits specified by manufacturer/supplier. Use manufacturer/supplier's specifications or documentation to ensure control of this criteria or process. Establish a verification process (e.g., ISO 9001) to ensure control.

5.2.6

Wrinkling, tearing, and/or deformation of the electrodes should be prevented and eliminated.

5.2.7

The manufacturing equipment should be designed to prevent any damage or modifications to the vent system during manufacturing operations.

5.3 Spiral winding process

5.3.1

The position of negative and positive tabs shall be staggered so they do not overlap each other. Use manufacturer/supplier's specifications or documentation to ensure control of this criteria or process. Establish a verification process (e.g., ISO 9001) to ensure control.

5.3.2

The external dimensions of the electrode core, which was spirally wound with the separator, shall be adjusted to maintain appropriate value. Use manufacturer/supplier's specifications or documentation to ensure control of this criteria or process. Establish a verification process (e.g., ISO 9001) to ensure control.

5.3.3

The winding tension of the electrode and separator during the winding process shall be properly adjusted to keep in design range and optimized to fit into the cell container. Use manufacturer/supplier's specifications or documentation to ensure control of this criteria or process. Establish a verification process (e.g., ISO 9001) to ensure control.

Copyright © 2004 IEEE. All rights reserved.

Copyright The Institute of Electrical and Electronics Engineers, Inc.
Provided by IHS under license with IEEE
No reproduction or networking permitted without license from IHS Not for Resale

5.3.4

To prevent damage to or telescoping of the wound electrodes, the winding spindle removal mechanism should be controlled, or a means to verify winding deviation has not occurred during removal of winding stick shall be incorporated.

5.4 Assembly precautions

5.4.1

The introduction of metal contamination from equipment or process should be prevented.

5.4.2

The method of assembly for insulating material, whether for electrode, current collectors, or internal insulation, should provide reliable protection against latent shorts for the functional life of the product.

5.4.3

The positions of lead tabs in the cell should be verified and not be overlapping.

5.4.4

The integrity of wound electrodes should be verified through resistance or a continuity check or equivalent means.

5.4.5

If the cell has insulating plates, the insulating plates shall be securely positioned. Use manufacturer/supplier's specifications or documentation to ensure control of this criteria or process.

5.4.6

A permeable X-ray may be used to inspect the cell structure for correct assembly, especially during the preliminary production setup.

5.4.7

OCV and/or impedance or other appropriate testing should be taken after critical steps in the manufacturing process where contamination could be introduced.

5.4.8

The cell manufacturing process shall have a traceability plan. This plan should include methods by which traceability can be implemented at any date during product functional life and after production to determine lot designation and performance data related to the cell. Use manufacturer/supplier's specifications or documentation to ensure control of this criteria or process. Establish a verification process (e.g., ISO 9001) to ensure control.

5.4.9

Manufacturer/supplier should develop and apply appropriate cell aging, grading, and/or sorting criteria for post-assembly screening of cells.

Copyright © 2004 IEEE. All rights reserved.

Copyright The Institute of Electrical and Electronics Engineers, Inc.
Provided by IHS under license with IEEE
No reproduction or networking permitted without license from IHS Not for Resale

5.5 Critical testing practices

Preproduction testing and production sampling should be extensive to confirm the design and production process. These testing procedures are not all inclusive. Tests are designed to confirm that the cells have the desired performance characteristics and are robust enough to resist abuse conditions should they arise.

5.5.1

New cell designs shall pass specified tests which the manufacturer/supplier decided according to the contents of design change before qualification as production cells. Use manufacturer/supplier's specifications or documentation to ensure control of this criteria or process. Establish a verification process (e.g., ISO 9001) to ensure control.

5.5.2

Production cells shall pass tests which the manufacturer/supplier specifies. This process is performed at specified intervals to maintain compliance with the manufacturer/supplier's internal specification. Use manufacturer/supplier's specifications or documentation to ensure control of this criteria or process. Establish a verification process (e.g., ISO 9001) to ensure control.

5.5.3

The specifications shall not exceed the manufacturer/supplier specified values after testing (except cells used for safety tests). Use manufacturer/supplier's specifications or documentation to ensure control of this criteria or process. Establish a verification process (e.g., ISO 9001) to ensure control.

5.5.4

OCV and/or impedance or other appropriate testing should be performed after critical steps in the manufacturing process where contamination could be introduced (winding, slitting, etc.).

5.5.5

Verification of final product performance and design specification conformance should be conducted through accelerated testing techniques and product inspection analysis.

5.5.6

There are several relevant cell testing standards. Manufacturer/suppliers should be familiar with these standards and should utilize one or more of these standards as part of their testing process. In certain cases, compliance with one or more of these standards may be necessary to meet regulatory requirements. Specifications that are relevant include UL 1642-1995,[7] IEC 61960-1-2000, UL 60950-2000 [B15] plus derivative standards, IEC 60950-1-2001 [B6] plus derivative standards.

6. Battery pack considerations

This clause describes the precautions and considerations to include in the analysis of designing, manufacturing, and testing of rechargeable Li-ion and Li-ion polymer battery packs over their useful life. The objective is to identify the precautions for the battery pack design to reduce latent problems to a minimum and to increase reliable user experience.

[7]Information on references can be found in Clause 2.

Copyright © 2004 IEEE. All rights reserved.

Copyright The Institute of Electrical and Electronics Engineers, Inc.
Provided by IHS under license with IEEE
No reproduction or networking permitted without license from IHS Not for Resale

6.1 Marking the battery pack

6.1.1

Each manufacturer/supplier shall have a traceability plan and each battery pack should carry markings of the production lot and/or date code on the label or contain the information in the battery pack or memory.

6.1.2

Each battery pack shall carry external markings providing the following information at a minimum.

6.1.2.1

Name or part number of the battery pack.

6.1.2.2

Voltage as rated by the manufacturer/supplier.

6.1.2.3

The chemistry type of the battery.

6.1.2.4

Name or identification code of the battery pack manufacturer/supplier.

6.1.2.5

User precautions as required by 8.1 of this standard.

6.2 Battery packs design guidelines

6.2.1

The battery pack shall be designed to mitigate hazards from contamination of electronic circuits by electrolyte from leaking cells.

6.2.2

The battery pack and connector shall be designed to minimize hazards from foreign objects and external sources of liquids.

6.2.3

In order to minimize the occurrence of an accidental short circuit, the following shall be implemented in the design of the circuit board and the assembling process of battery packs:

a) Provide adequate runner spacing, soldering area size, and distance from each other, especially for power traces

b) Provide adequate process control from solder balls, solder flashes, solder bridges, and foreign debris

Copyright © 2004 IEEE. All rights reserved.

Copyright The Institute of Electrical and Electronics Engineers, Inc.
Provided by IHS under license with IEEE
No reproduction or networking permitted without license from IHS Not for Resale

6.2.4

All components used in the construction of the battery pack, such as connectors, cables, tabs, insulators, and circuit boards, shall have adequate electrical, thermal, and mechanical ratings for the application.

6.2.5

Individual unit cells in a battery pack shall be arranged in accordance with correct polarity.

6.3 External short-circuit precautions

6.3.1

The battery pack shall limit output current in the event of an external short circuit whether the battery pack is installed in or removed from the host device.

6.3.2

The battery pack shall have at least two independent methods to limit current. One may be at the cell level. One method may include connector structure to minimize the possibility of an external short circuit of the battery terminals.

6.3.3

Methods to limit output current may include protective circuits.

6.3.4

Battery pack connector designs shall be implemented to minimize the possibility of accidental external short circuit.

6.4 Overheating precautions

6.4.1

Temperature ranges for operation shall be set based on the operating temperature ranges recommended by the cell manufacturer/supplier, battery pack manufacturer/supplier, and host device manufacturer/supplier.

6.4.2

Temperature ranges shall consider ambient temperature as well as the effects of heat interactions between cell, battery pack, and host device.

6.4.3

Over-temperature protection shall be incorporated to prevent operation above maximum temperature and time limitations where hazards may occur.

6.4.3.1

The battery pack shall contain at least one thermal protection circuit or device independent of internal cell devices or mechanisms. The combination of cell, pack, and host device/charger shall have at least two independent thermal protection devices or mechanisms.

Copyright © 2004 IEEE. All rights reserved.

Copyright The Institute of Electrical and Electronics Engineers, Inc.
Provided by IHS under license with IEEE
No reproduction or networking permitted without license from IHS Not for Resale

6.4.3.2

When temperature and time limitations are exceeded, the battery pack shall take action, which may include shutdown, or other protective action.

6.4.3.3

When temperature and time limitations are exceeded, the host device may take action, which may include shutdown, or other protective action.

6.5 Overcharge precautions (consult overcharge and over-discharge definitions)

6.5.1

The maximum charging voltage and current shall be set on the basis of an agreement made among the cell, battery pack, and host device manufacturer/suppliers and shall be based on the upper voltage and current limits of the cell, as specified by the cell manufacturer/supplier.

6.5.2

The charging system shall be designed to limit the charging voltage and current to their maximum specified values as specified in 6.5.1. The battery pack should include charging control circuitry or a device to prevent overcharging

6.5.3

Charge control may be located in the battery pack.

6.5.4

The combination, consisting of cell, battery pack, and host device/charger shall have at least three independent overcharge protection functions.

6.5.4.1

At least one overcharge protection function method shall be overvoltage detection.

6.5.4.2

At least one of these protection functions should be in the battery pack (see 3.1.22 and 3.1.25).

6.5.5

The combination of cell, battery pack, and host device/charger shall detect the voltage of each cell block in the battery pack and shall control the charge if overvoltage occurs.

6.6 Over-discharge precautions

6.6.1

The minimum discharge voltage and current shall be set on the basis of an agreement made among the cell, battery pack, and host device manufacturer/suppliers and shall be based on the lower voltage and current limits of the cell, as specified by the cell manufacturer/supplier.

Copyright © 2004 IEEE. All rights reserved.

Copyright The Institute of Electrical and Electronics Engineers, Inc.
Provided by IHS under license with IEEE
No reproduction or networking permitted without license from IHS
Not for Resale

6.6.2

The battery pack should have at least one undervoltage protection circuit that disables battery discharge to the external system.

6.7 Overcurrent precautions

6.7.1

Upper limit discharge current and time limitations shall be set on the basis of an agreement made among cell manufacturer/supplier, battery pack manufacturer/supplier, and portable computing device manufacturer/ supplier.

6.7.2

The battery pack shall have at least one overcurrent protect circuitry or devices designed to meet the specification in 6.7.1. The device may be in integral part of the cell.

6.7.3

Overcurrent protect functions may include protect circuitry and devices, such as a fuse or PTC resistor.

6.7.4

The system (consisting of battery cell, battery pack, and host device/charger) shall contain at least two independent overcurrent protection functions to meet the maximum current specified in 6.5.1.

6.8 Mechanical stress precautions

The following practices to mitigate the effect of external mechanical force, including press, bent, twist, drop, vibration, and shock on battery packs, should be followed.

6.8.1

Individual unit cells should be placed in the battery pack with considerations to include orientation, insulation, spacing, and other elements from the design analyses. Soft battery packaged cells require special mechanical considerations.

6.8.2

The movement of cells inside the battery pack should be minimized.

6.8.3

Allowances shall be made for cell and battery pack dimensional tolerance and changes throughout the product lifetime.

6.8.4

Cells should be electrically insulated from each other to prevent unintended connections. Additional insulation may be required to supplement cell sleeving.

Copyright © 2004 IEEE. All rights reserved.

Copyright The Institute of Electrical and Electronics Engineers, Inc.
Provided by IHS under license with IEEE
No reproduction or networking permitted without license from IHS Not for Resale

6.8.5

Tabs, plates, and lead cables should be connected by welding and/or soldering to provide secure mechanical and electrical connections. Do not solder directly to the cells.

6.8.6

Appropriate spacing should be provided to prevent abrasion, wear, or damage to cable leads and/or connectors in the battery pack.

6.8.7

Electrical parts should have appropriate clearance to allow for situations where the battery pack is deformed by external mechanical force.

6.8.8

Appropriate strain relief should be provided for cable leads and/or connectors in the battery pack.

6.8.9

Vent mechanisms on cells shall not be blocked to impede their operation.

6.8.10

A circuit board in the battery pack should be mechanically isolated to prevent unintended electrical connections.

6.9 Connector/terminal precautions

6.9.1

The connector/terminal shall be designed to minimize the possibility of an accidental short circuit. The electrical connector/terminal should be set back in its housing to prevent shorting by contact with a conductive object.

6.9.2

The connector/terminal shall adhere to host device mechanical considerations (see 7.3.1).

6.10 Other precautions

6.10.1

The circuit board should be adequately protected from ultrasonic weld energy and/or other battery assembly process.

6.10.2

Battery packs should be designed to allow vented gasses to escape.

Copyright © 2004 IEEE. All rights reserved.

Copyright The Institute of Electrical and Electronics Engineers, Inc.
Provided by IHS under license with IEEE
No reproduction or networking permitted without license from IHS Not for Resale

6.10.3

Specific electrostatic discharge (ESD) tolerance shall be included in the battery pack design, testing, and qualification. Test procedures described in IEC 61000-2-4:2002 may be used.

6.10.4

Welding shall only be applied in areas designated by cell manufacturer/supplier in accordance with agreed upon specifications.

6.10.5

Rewelding can damage the cell and should not be used.

6.11 Assembly precautions

6.11.1

Short-circuit of the cells and battery packs shall be avoided.

6.11.2

Contact of any foreign object to cell or protect circuit shall be avoided.

6.11.3

Precautions shall be taken to avoid damage to conductors and insulators, for example, from sharp edges, burrs, pinching, or kinking.

6.11.4

Precautions shall be taken to avoid damage to protection devices and circuits.

6.11.5

Precautions shall be taken to avoid damage to cells, protective circuit module, and battery pack during ultrasonic welding.

6.11.6

Precautions shall be taken to avoid damage to protection circuits and other devices from ESD during handling.

6.11.7

The protect functions in the battery pack shall be checked as appropriate during outgoing inspection process.

6.11.8

Critical processes such as welding shall have a quality control and maintenance plan to control the consistency of the assembly process and adherence to specifications.

Copyright © 2004 IEEE. All rights reserved.

Copyright The Institute of Electrical and Electronics Engineers, Inc.
Provided by IHS under license with IEEE
No reproduction or networking permitted without license from IHS Not for Resale

6.11.9

The vent mechanism of the cell shall not be covered or obstructed with plastic or other material in the battery pack in such a way as to prevent its operation.

6.11.10

There shall be no damage to cell container and critical cell design elements during welding and other operations. Note: Use standardized specifications or documentation to ensure control of this criteria or process. Establish a verification process (e.g., ISO 9001) to ensure control.

6.12 Precautions for cells connected in series and/or parallel to form a battery pack

6.12.1

Cells shall be matched per specification for voltage, capacity, size, and impedance.

6.12.2

Cells should be from the same manufacturing lot.

6.12.3

Cells shall not be placed in a battery pack in the following combinations:

a) A fresh cell with an old or spent cell
b) Cells made by different manufacturers
c) Cells that are different in chemical materials or design

6.12.4

Circuitry designs that incorporate intermediate voltage taps shall not be employed, except for use in cell monitoring or balancing (see Figure 1).

6.13 Other relevant battery testing standards

There are several relevant battery testing standards. Manufacturer/suppliers should be familiar with these standards and should utilize one or more of these standards as part of their testing process. In certain cases compliance with one or more of these standards may be necessary to meet regulatory requirements. Relevant standards include: UL 2054-2003, IEC 61960-2:2001, UN ST/SG/AC10/11/Rev.4-2003, UL 60950-2000 [B15], and IEC 60950-1:2001 [B6].

7. Host device considerations

This clause describes the precautions and considerations to include in the analysis of designing, manufacturing and testing of host devices for use with rechargeable Li-ion and Li-ion polymer battery packs over their useful life. The objective is to identify the precautions for the host system design to reduce latent problems to a minimum and to increase reliable user experience. An independent charging cradle shall be treated as a host device and covered by the same specifications. Certain requirements of Clause 6 may be met by incorporating the appropriate function in the host device rather than the battery pack. Host device designers

Copyright © 2004 IEEE. All rights reserved.

Copyright The Institute of Electrical and Electronics Engineers, Inc.
Provided by IHS under license with IEEE
No reproduction or networking permitted without license from IHS Not for Resale

should be familiar with Clause 6 and verify that the appropriate system level functions are expected to reside in the host, pack, or cells.

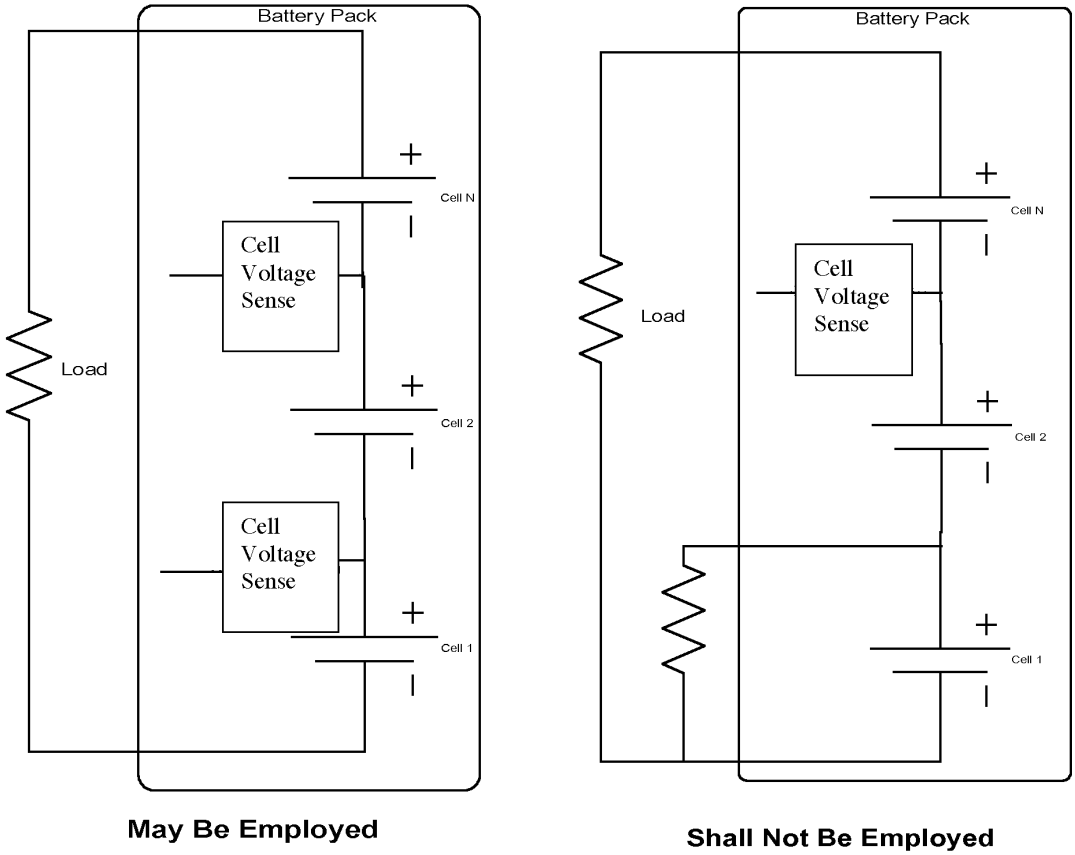

Figure 1—Intermediate tap

7.1 DC input voltage and current to the host device

7.1.1

Each host device shall be marked with the specified dc input voltage range and dc input current for the system. The host device shall not allow damaging power surges and transients from the input to propagate to the battery pack. Specific surge and transient limits shall be included in the system design specifications.

7.1.2 Overvoltage

The host device should have the capability to measure dc input voltage in order to determine if it is within the limits allowed by the system specifications.

7.1.2.1

The host device should isolate the input connection from the rest of the system if the dc input voltage exceeds the specified value plus certain tolerance. The tolerance should be decided by the system designer.

Copyright © 2004 IEEE. All rights reserved.

Copyright The Institute of Electrical and Electronics Engineers, Inc.
Provided by IHS under license with IEEE
No reproduction or networking permitted without license from IHS
Not for Resale

7.1.2.2

The host device may display a warning message to the end user if an overvoltage condition occurs. Different warning messages may be necessary whether the system in use or not in use. Examples include a visual on-screen user notification and audible signal if the system is in use. If the system is not in use, user notification may include an off-screen visual indication and/or audible signal.

7.1.3 Overcurrent

The host device may have the capability to measure dc input current in order to determine if it is within the limits allowed by the system specifications.

7.1.3.1

The host device may isolate the input connection from the rest of the system if the dc input current exceeds the specified value plus certain tolerance.

7.1.3.2

The host device may display a warning message to the end user, if an overcurrent condition occurs. Different warning messages may be necessary for the system in use or in turned off condition. Examples include a visual on-screen user notification and audible signal if the system is in use. If the system is not in use, user notification may include an off-screen visual indication and/or audible signal.

7.2 Charging subsystem considerations

The charging subsystem consists of all components which initiate, regulate, and support battery charging. These functions may reside in the host device, the adapter, charger, embedded controller, selector, and/or battery pack(s), as shown in Figure 2 and Figure 3 for example. The requirements of this subclause may be implemented in any charging subsystem component, except in cases where a specific component is specified.

7.2.1

The charging system or any part of the host device shall not disable the safety features inside the battery pack(s).

7.2.2

In charging subsystems which employ a communications interface with the battery pack (such as SM bus), the system shall terminate charging if communications fails.

7.2.2.1

A precharge algorithm may be applied if necessary to activate a controller from a low-voltage state.

7.2.2.2

The watchdog timer should reset the embedded controller in case of malfunction.

7.2.2.3

A warning message may be sent to the end user to notify of such an event.

Copyright © 2004 IEEE. All rights reserved.

Copyright The Institute of Electrical and Electronics Engineers, Inc.
Provided by IHS under license with IEEE
No reproduction or networking permitted without license from IHS Not for Resale

7.2.2.4

If the embedded controller is in an undetermined state for a time period exceeding the system specification, the active charger shall stop charging.

7.2.2.5

The embedded controller may receive periodic update information from the battery pack. If the battery pack fails to provide the periodic update, the embedded controller shall notify the charger to stop charging after a predetermined period. The period between updates and the number of updates dropped before a fail condition is reached is determined by the system manufacturer/supplier.

7.2.3

An identification scheme shall be employed so that the host device can know what kind of battery pack is currently present in the system. Battery chemistry and configuration shall be included in the identification scheme. If the battery pack cannot be properly identified, charge/discharge should be terminated.

7.2.4

The charging system shall incorporate the correct charging algorithm for the battery pack regardless of the type of charging system or its location.

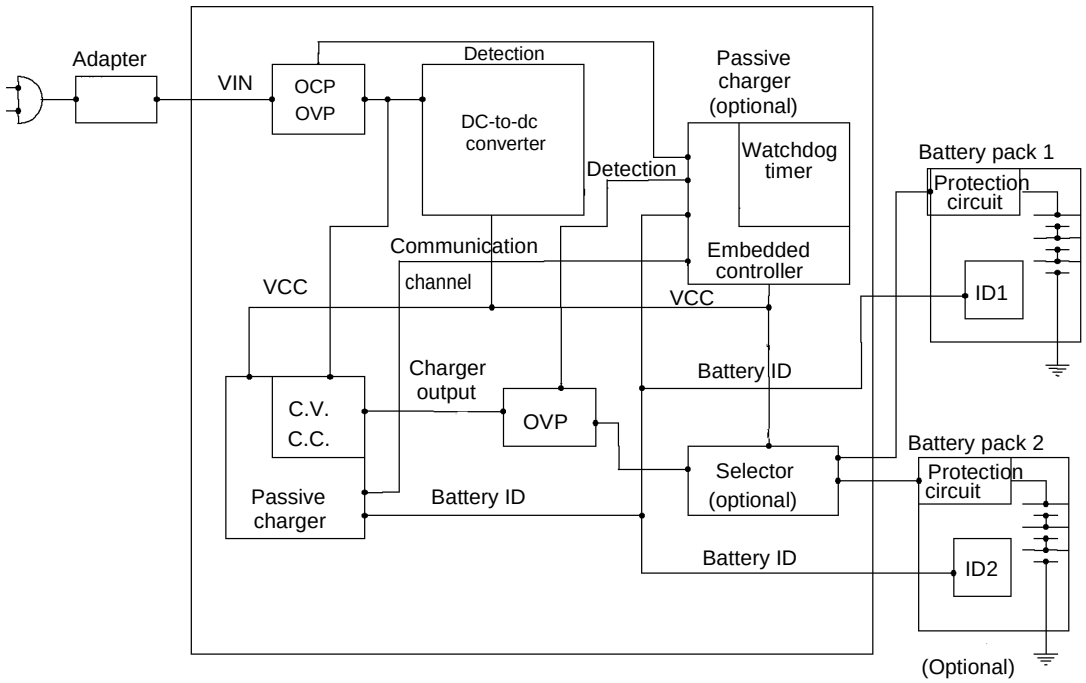

Figure 2—Example of a passive charger subsystem

Copyright © 2004 IEEE. All rights reserved.

Copyright The Institute of Electrical and Electronics Engineers, Inc.
Provided by IHS under license with IEEE
No reproduction or networking permitted without license from IHS
Not for Resale

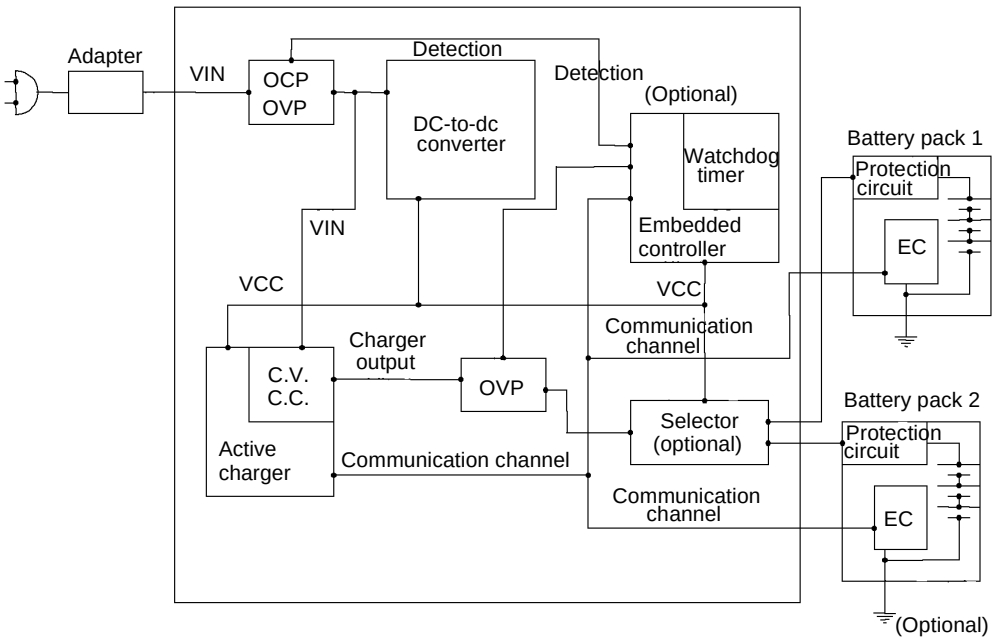

Figure 3—Example of an active charger subsystem

7.2.5 Charging system algorithm considerations

An example of a charging algorithm is given in Figure B.1.

7.2.5.1

The charging subsystem shall detect the type of battery pack and execute the correct charging algorithm based upon the identification information provided by the battery pack.

7.2.5.2

The charging subsystem shall check the battery temperature prior to and during charging. If the temperature is out of specified range, the subsystem shall suspend charging.

7.2.5.3

The charging subsystem shall stop charging if communication between the battery pack and the charging system fails in systems employing communication protocol.

7.2.5.4

The system shall detect initial battery voltage and shall take appropriate action, as follows:

a) The system shall not initiate charge if battery voltage is above a threshold defined by the battery manufacturer/supplier.

b) The system shall not initiate normal charge if the battery voltage is below a threshold defined by the battery manufacturer/supplier. In this case, the system may support a precharge function to bring the battery voltage above the required threshold. For example, a lower charge current than normally specified may be applied.

Copyright © 2004 IEEE. All rights reserved.

Copyright The Institute of Electrical and Electronics Engineers, Inc.
Provided by IHS under license with IEEE
No reproduction or networking permitted without license from IHS
Not for Resale

7.2.5.5

The system should support a maximum charging time-out function for each stage in the charge process, e.g., normal charge and precharge.

7.2.5.6

When a fault is detected in the battery or charging system, charging shall be suspended. Examples of faults may include the following:

a) Battery voltage does not recover during precharge.
b) The charging system is not capable of delivering the required voltage and/or current to the battery pack.
c) The charge current being drawn exceeds the specification, implying a potential short circuit.
d) The battery communicates that an alarm or fault condition exists.

7.2.5.7

The charger shall not charge the battery above its specified full charge condition.

7.2.5.8

The charger shall suspend charging if an overvoltage condition is detected in the charger output.

7.2.5.9

The system may permanently disable charging and discharging of the battery if a repeated fault condition is detected in the battery.

7.2.6

The following considerations shall be applied to a host device with multiple battery packs.

a) In multi-battery pack systems, the requirements in 7.2.5 shall apply to each battery pack independently.
b) The system shall not allow a battery pack to directly charge another battery pack in a multi-battery pack system without the use of an appropriate charging subsystem.

7.2.7

Specific ESD tolerance shall be included in the system design, testing, and qualification.

7.2.8

The system shall incorporate temperature limitations as agreed to by cell, battery pack, and host manufacturer/suppliers. The system shall initiate action to maintain temperature within specifications. Some examples of actions which may be taken include shutting down the system, reducing power consumption, suspending battery charging, or reducing charging current.

7.2.9

An overvoltage sensing circuit should be used on the charger output side to measure the output voltage to the battery pack.

Copyright © 2004 IEEE. All rights reserved.

Copyright The Institute of Electrical and Electronics Engineers, Inc.
Provided by IHS under license with IEEE
No reproduction or networking permitted without license from IHS Not for Resale

7.2.10

The system may send a notification to the end user regarding the battery and or charging system status (see Clause 8).

7.2.11

The system may include a method for determining whether or not the battery pack has been qualified with the system per this standard. The system may take action if an unqualified battery is detected. Actions may include terminating charge and/or discharge, changing the charging profile, modifying system performance, and/or notifying end user.

7.3 Mechanical considerations

7.3.1 Connections between the host device and the battery

7.3.1.1

The host device and battery connections shall mate properly and be capable of good electrical contact throughout their respective useful lives.

7.3.1.2

Power and ground pins shall be sufficiently separated to minimize the possibility of an accidental short circuit between those two pins.

7.3.1.3

The system shall allow the battery to be inserted only with the correct polarity.

7.3.1.4

The conductors and connectors shall have the proper current rating for the current load with adequate margin as determined by the system manufacturer/supplier. Multiple power pins should be used to support the current load if required.

7.3.1.5

The battery connector to the system main board shall be mechanically robust and should not rely on electrical solder joints alone for mechanical stability for host devices with end-user replaceable battery.

7.3.1.6

The host device battery connector pins shall have the proper mating sequence to prevent latch up in devices or damage to components. Either the ground pin or power/ground pins should be the first to make contact before all other pins.

7.3.1.7

The host device connector shall be able to withstand insertions and removals without damage over the expected lifetime of the system.

Copyright © 2004 IEEE. All rights reserved.

--`,,`-`-`,,`,,`,`,,`---
Copyright The Institute of Electrical and Electronics Engineers, Inc.
Provided by IHS under license with IEEE
No reproduction or networking permitted without license from IHS Not for Resale

7.3.1.8

The host device battery connector pin metallurgy shall be compatible with the battery connector pin metallurgy to minimize corrosion and resistance changes over the life of the system. (See IEC 60950-1:2001 [B6], Annex J.)

7.3.2

The host device shall withstand shock and vibration caused by normal usage and shall not propagate faults to the battery pack and cells, when they are installed in the system.

7.4 Foreign objects

Precaution shall be taken to minimize the potential for foreign objects and/or liquids in the host device, causing a short circuit either during manufacturing process or end-user operation.

7.5 Design verification

Host device designs shall undergo thorough testing and design verification. Preproduction testing and production sampling should be extensive to confirm design and production processes. Testing and verification shall include all system design criteria in 7.1, 7.2, 7.3, and 7.4. See Annex B for suggested methods to address specific system functions and attributes.

8. Total system reliability considerations

Figure 4 shows how the battery cell, battery pack, host device, and end user work synergistically together for total system reliability. The user shares in several areas of responsibility for total system reliability as identified during system design analysis. This clause sets forth recommendations for design analysis for communicating information to the user to explain the user responsibility (for example, owner's manual, printed labels for the host device and battery pack, host device messages, and help files).

8.1 Required communication to user

The following information or equivalent statements shall be made available to the user through one or more of the following means, as appropriate: printed on the label for the battery, printed on the label for host device, and/or printed in the owner's manual, and/or posted in a help file or Web site.

8.1.1

The following precautions represent an example of a minimum list of safety precautions to be made available to the end user. Additional precautions may be noted.

8.1.1.1

Do not disassemble or open, drop (mechanical abuse), crush, bend or deform, puncture, or shred.

8.1.1.2

Do not modify or remanufacture, attempt to insert foreign objects into the battery, immerse or expose to water or other liquids, or expose to fire, excessive heat including soldering irons, or put in microwave oven.

Copyright © 2004 IEEE. All rights reserved.

Copyright The Institute of Electrical and Electronics Engineers, Inc.
Provided by IHS under license with IEEE
No reproduction or networking permitted without license from IHS
Not for Resale

8.1.1.3

Only use the battery for the portable computing system for which it was specified.

8.1.1.4

Only use the battery with a charging system specified by the manufacturer/supplier.

8.1.1.5

Do not short-circuit a battery or allow metallic or conductive objects to contact both battery terminals simultaneously.

8.1.1.6

Replace the battery only with another battery that has been qualified with the system per this standard, IEEE Std 1625-2004™. Use of an unqualified battery may present a risk of fire, explosion, leakage, or other hazard.

8.1.1.7

Dispose of used batteries promptly according to the manufacturer/supplier's instructions.

8.1.1.8

Improper battery use may result in a fire, explosion, or other hazard.

8.1.2

Battery usage by children should be supervised.

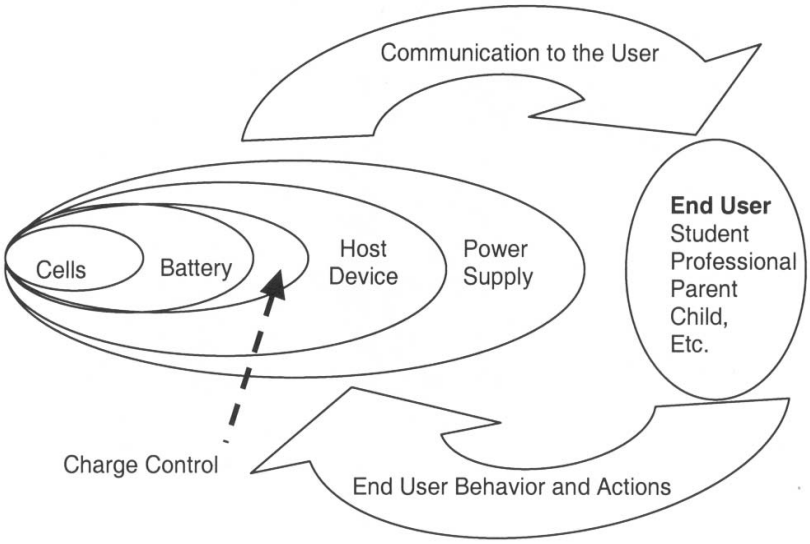

Figure 4—Depiction of the interaction between the mobile computing device and the user

Copyright © 2004 IEEE. All rights reserved.

Copyright The Institute of Electrical and Electronics Engineers, Inc.
Provided by IHS under license with IEEE
No reproduction or networking permitted without license from IHS
Not for Resale

8.2 User alerts

The following indications, notifications, and dialog/messages, at the system level, or an equivalent statement may be displayed along with recommended actions as appropriate.

8.2.1

Abnormal battery temperature alert.

8.2.2

Abnormal host device and/or battery dc input voltage alert.

8.2.3

Irregular overcurrent draw alert.

8.2.4

Battery communication fail/time-out alert.

8.2.5

Unqualified battery alert.

8.2.6

Alert for other malfunctions that may lead to hazards.

8.3 Recommended communication to user

The following information should be provided to end user:

a) In the event of a battery leak, do not allow the liquid to come in contact with the skin or eyes. If contact has been made, wash the affected area with large amounts of water and seek medical advice.

b) Seek medical advice immediately if a battery has been swallowed.

c) Do not leave the battery on prolonged charge when not in use.

d) Batteries generally have their best performance when stored and operated at normal room temperature.

e) Communicate the appropriate steps to be taken if a hazard occurs.

8.4 Marking and labeling

Recognized international symbols may be used in place of text where appropriate. Manufacturer/supplier may also consult other relevant industry standards in Clause 2 and Annex F. See 6.1.2 for mandatory battery pack label and marking requirements. Additional information may be provided as appropriate.

Copyright © 2004 IEEE. All rights reserved.

Copyright The Institute of Electrical and Electronics Engineers, Inc.
Provided by IHS under license with IEEE
No reproduction or networking permitted without license from IHS Not for Resale

Annex A

(informative)

Introduction to annexes

This standard contains six informative annexes. This information may be used to guide the development of the design analysis described in the standard. Annex B summarizes tests that may be used in conjunction with design verification for reliable performance of cells, battery packs, and host devices. Annex C briefly describes the FMEA process and two-fault scenarios. The RPN is introduced as a means to assign priorities to the various risks encountered. Annex D is a demonstration of a thorough analysis using the FMEA approach with the interactions between the various risks. This is an extensive study and demonstrates the need to set a reasonable and practical limit to the number of scenarios that can be reasonably considered. Annex E reports on a study of the high temperatures that can be reasonably expected to be encountered in the use a host device. Annex F lists references that are useful for better understanding and complying with this standard.

Items 1–96 in Table D.1 provide a wide range of scenarios that cover the gamut of those situations that could possibly occur. Those in bold type font are considered to be the most important, and those in italic plus bold are considered to be of lesser importance.

See Annex D for examples of intended use, reasonable and foreseeable misuse, and although outside the scope of this standard, conditions beyond reasonable and foreseeable misuse. Annex D also provides examples of all of these conditions as part of the educational spirit and intent of this standard.

Copyright © 2004 IEEE. All rights reserved.

Copyright The Institute of Electrical and Electronics Engineers, Inc.
Provided by IHS under license with IEEE
No reproduction or networking permitted without license from IHS Not for Resale

Annex B

(informative)

Test methods for design verification

This annex describes test methods for design verification for cells (Clause 5), battery packs (Clause 6), and host devices (Clause 7). In addition, an example of a charge algorithm is included for Clause 7.

B.1 Description of cell design verification tests

This subclause describes test methods for the design verification for cells. The following are summaries of the various tests and are not test procedures. The reader is referred to the appropriate IEC standards for test details.

WARNING
Design verification testing of Li-ion and Li-ion polymer cells, batteries, and host devices may be dangerous to the persons carrying them out. All appropriate measures should be taken to protect personnel against possible hazards, which may include fire, explosion, electrical shock, and/or chemical exposure.

Table B.1 illustrates suggested methods to address design verification of specific functions and attributes of the cells discussed in Clause 5. These specific tests procedures and requirements are designed to confirm that the cells have the desired performance characteristics and are robust enough to resist abuse conditions should they arise.

Table B.1—Brief description of cell tests

	Specific requirements and test procedure	Acceptance criteria
Intended use		
Continuous charging	Fully charged cell, 20 ± 5 °C, for 28 days to a charge as specified by the manufacturer	No fire No explosion No leakage
Vibration	Fully charged cell, 20 ± 5 °C, amplitude: 0.8 mm, 1 Hz/min between 10–55 Hz, 3 mutually perpendicular directions (2 directions for 2 axes of symmetry), should have 90 min per axis	No fire No explosion No leakage
Temperature cycling	Fully charged cell, in a test chamber, and subjected to the following cycles: a) 75 ± 2 °C for 4 h b) 20 ± 5 °C for 2 h c) –20 ± 2 °C for 4 h d) 20 ± 5 °C for 2 h e) Repeat a) to d) for 4 cycles f) After 5th cycle, store the cells for 7 days prior to examination	No fire No explosion No leakage

Excerpts from IEC 62133 are Copyright © 2002, IEC, Geneva, Switzerland.www.iec.ch

Copyright © 2004 IEEE. All rights reserved.

Copyright The Institute of Electrical and Electronics Engineers, Inc.
Provided by IHS under license with IEEE
No reproduction or networking permitted without license from IHS
Not for Resale

Table B.1—Brief description of cell tests *(continued)*

	Specific requirements and test procedure	Acceptance criteria
Reasonable and foreseeable misuse		
External short circuit	Fully charged cell, 20 ± 5 °C and 55 ± 2 °C, short-circuit with a total external resistance less than 100 mΩ.	No fire No explosion
Free fall	20 ± 5 °C, fully charged cell, drop 3 times from 1.0 m onto a concrete floor so as to obtain impacts in random orientations	No fire No explosion
Mechanical shock (crash hazard)	Fully charged cell, 20 ± 5 °C, peak acceleration: 125–175 g_n (minimum average acceleration during the initial 3 msec: 75 g_n), 3 shocks of equal ± magnitude for 3 mutually perpendicular directions (2 directions for 2 axes of symmetry)	No fire No explosion No leakage
Thermal abuse	Fully charged cell, 130 ± 2 °C for 10 min (temperature increase rate: 5 ± 2 °C/min)	No fire No explosion
Crushing of cell	20 ± 5 °C, fully charged cell is to be crushed between two flat surfaces to apply a force approximately 13 kN, so that the longitudinal axis of the cell shall be parallel to flat surface. Once the maximum pressure has been obtained, it is released.	No fire No explosion
Low pressure	Fully charged cell, 20 ± 5 °C, 11.6 kPa for 6 h	No fire No explosion No leakage
Overcharge	20 ± 5 °C, discharged cell, power supply ≥ 10 V, charge current = I_{rec} time (h) = 2.5 C_5/I_{rec} I_{rec} = recommended constant current charge in amperes specified by the manufacturers	No fire No explosion
Forced discharge	20 ± 5 °C, discharged cell, discharge with a constant current of $1I_t$A for 90 min	No fire No explosion

Excerpts from IEC 62133 are Copyright © 2002, IEC, Geneva, Switzerland.www.iec.ch

B.1.1 Comparison of design verification tests

Table B.2 is a comparison of the suggested methods from various standard organizations to address design verification of specific functions and attributes of the cells discussed in Clause 5. These specific tests procedures and requirements are designed to confirm that the cells have the desired performance characteristics and are robust enough to resist abuse conditions should they arise.

Copyright © 2004 IEEE. All rights reserved.

Copyright The Institute of Electrical and Electronics Engineers, Inc.
Provided by IHS under license with IEEE
No reproduction or networking permitted without license from IHS
Not for Resale

Copyright The Institute of Electrical and Electronics Engineers, Inc.
Provided by IHS under license with IEEE
No reproduction or networking permitted without license from IHS
Not for Resale

Table B.2—Comparison of cell testing standards

Test title	UL 1642-1995	IEC 62133:2002	UN ST/SG/AC.10/11/Rev.4-2003
1) Continuous charge test (electrical)		Procedure: 20 ± 5 °C, discharged cell, hold at the specified end-of-charge voltage for a total period of 28 days	
2) Short circuit (electrical)	Procedure: Fully charged sample, room temperature and 60 ± 2 °C, short-circuit with a maximum resistance load of 0.1 Ω.	Procedure: Fully charged cell, 20 ± 5 °C and 55 ± 2 °C, short-circuit with a total external resistance less than 100 mΩ. Should have max. temperature limit.	Procedure: Test 5 Cell and battery sample, 55 ± 2 °C, short-circuit with a total external resistance 0.1 Ω for 1 h.
3) Abusive overcharge (electrical)	Procedure: At ambient temp., fully discharged sample, connected in opposition to dc power supply, charging with 3 times I_c current, for t_c h. I_c = current specified by manufacturer t_c = 2.5 C/3(I_c)	Procedure: 20 ± 5 °C, discharged cell, power supply ≥ 10V Charge current = I_{rec} Time (h) = 2.5 C_5/I_{rec} I_{rec} = recommended constant current charge in amperes specified by the manufacturers	Procedure: Test 7 When manufacturer's recommended charge voltage is not more than 18 V, the minimum voltage of test shall be lesser of 2 times the maximum charge voltage of battery or 22 V. Charge current will be twice the manufacturer's recommended maximum continuous charge current, at ambient temperature for 24 h.
4) High rate charge (electrical)		Procedure: 20 ± 5 °C, discharged cell, charge by the current of 3 times the recommended charge current, I_{rec}. The cell shall be 100% charged unless an internal protective device functions to cut the charge current and full charge is not possible.	

Excerpts from IEC 62133 are Copyright © 2002, IEC, Geneva, Switzerland.www.iec.ch

Copyright © 2004 IEEE. All rights reserved.

Copyright The Institute of Electrical and Electronics Engineers, Inc.
Provided by IHS under license with IEEE
No reproduction or networking permitted without license from IHS

Table B.2—Comparison of cell testing standards *(continued)*

Test title	UL 1642-1995	IEC 62133:2002	UN ST/SG/AC.10/11/Rev.4-2003
5) Forced discharge (electrical)	Procedure: At ambient temp., completely discharged sample is connected in series with the specified number of fresh cells. The resultant battery pack is to be short-circuited with a maximum resistance load of 0.1 Ω.	Procedure: 20 ± 5 °C, discharged cell, discharge with a constant current of $1I_tA$ for 90 min	Procedure: Test 8 At ambient temp., cell shall be force discharged by connecting it in series with a 12 V dc-power supply at an initial current equal to the maximum discharge current specified by the manufacturer. Time interval equal to its rated capacity divided by the initial test current.
6) Vibration (mechanical)	Procedure: Fully charged sample, at ambient temp., amplitude: 0.8 mm, 1 Hz/min, between 10–55 Hz, in 3 mutually perpendicular directions (2 directions for 2 axes of symmetry)	Procedure: Fully charged cell, at 20 ± 5 °C, amplitude: 0.8 mm, 1 ± 0.055 Hz/min, between 10–55 Hz, 3 mutually perpendicular directions (2 directions for 2 axes of symmetry), should have 90 min per axis	Procedure: Test 3 Cell or battery sample, amplitude: 0.8 mm, 7 Hz ~ 200 Hz (15 min) cycle shall be repeated 12 times, 3 mutually perpendicular directions
7) Shock test (mechanical)	Procedure: Fully charged sample, at 20 ± 5 °C, peak acceleration: 125–175 g (minimum average acceleration during the initial 2 msec: 75 g), 3 shocks of equal ± magnitude for 3 mutually perpendicular directions (2 directions for 2 axes of symmetry)	Procedure: Fully charged cell, 20 ± 5 °C, peak acceleration: 125–175 g_n (minimum average, acceleration during the initial 3 msec: 75 g_n), 3 shocks of equal ± magnitude for 3 mutually perpendicular directions (2 directions for 2 axes of symmetry)	Procedure: Test 4 Cell or battery sample, peak acceleration: 150 g_n, pulse duration 6 msec, 3 shocks of equal ± magnitude for 3 mutually perpendicular directions, total of 18 shocks. For large cells and batteries, peak acceleration: 50 g_n, pulse duration 11 msec, 3 shocks of equal ± magnitude for 3 mutually perpendicular directions, total of 18 shocks.
8) Free fall (mechanical)		Procedure: 20 ± 5 °C, fully charged cell, drop 3 times from 1.0 m onto a concrete floor so as to obtain impacts in random orientations.	

Excerpts from IEC 62133 are Copyright © 2002, IEC, Geneva, Switzerland.www.iec.ch

Copyright © 2004 IEEE. All rights reserved.

Not for Resale

--`,,`,,`-`-`,,`,,`,`,,`---

---.''.'.''.''.-.-.'.....--

Table B.2—Comparison of cell testing standards *(continued)*

Test title	UL 1642-1995	IEC 62133:2002	UN ST/SG/AC.10/11/Rev.4-2003
9) Crush test (mechanical)	Procedure: At ambient temp., a fully charged sample is to be crushed between two flat surfaces to apply a force approximately 13 kN so that the longitudinal axis of the cell shall be parallel to flat surface. Once the maximum pressure has been obtained, it is released.	Procedure: 20 ± 5 °C, fully charged cell is to be crushed between two flat surfaces to apply a force approximately 13 kN so that the longitudinal axis of the cell shall be parallel to flat surface. Once the maximum pressure has been obtained, it is released.	
10) Impact test (mechanical)	Procedure: At ambient temp., a fully charged sample is to be placed on a flat surface. A 15.8 mm Φ-bar is to be placed across the center of the battery. A 9.1 ± 0.46 kg weight is to be dropped from a height of 610 ± 25 mm onto the sample.		Procedure: Test 6 Cell or component cell is to be placed on a flat surface. A 15.8 mm Φ-bar is to be placed across the center of the battery. A 9.1 kg weight is to be dropped from a height of 61 ± 2.5 cm onto the sample.
11) Altitude simulation (environmental)	Procedure: Fully charged sample, 20 ± 3 °C, 11.6 kPa for 6 h.	Procedure: Fully charged cell, 20 ± 5 °C, 11.6 kPa for 6 h.	Procedure: Test 1 Cell or battery, 20 °C ± 5 °C, 11.6 kPa for 6 h.
12) Thermal shock or temperature cycling (environmental)	Procedure: Fully charged samples, in a test chamber, and subjected to the following cycles: a) 70 ± 3 °C for 4 h b) 20 ± 3 °C for 2 h c) –40 ± 3 °C for 4 h d) 20 ± 3 °C e) Repeat a) to d) for 9 cycles f) After 10th cycle, store the samples for 7 days prior to examination.	Procedure: Fully charged cell, in a test chamber and subjected to the following cycles: a) 75 ± 2 °C for 4 h b) 20 ± 5 °C for 2 h c) –20 ± 2 °C for 4 h d) 20 ± 5 °C for 2 h e) Repeat a) to d) for 4 cycles f) After 5th cycle, store the cells for 7 days prior to examination.	Procedure: Test 2 Cell or battery, 6 h at 75 ± 2 °C and 6 h at –40 ± 2°C, repeat 10 times, followed by storage at least 24 h at 20 ± 5 °C.
13) Thermal exposure (environmental)	Procedure: Fully charged sample, 150 ± 2 °C for 10 min (temperature increase rate: 5 ± 2 °C/min).	Procedure: Fully charged cell, 130 ± 2 °C for 10 min (temperature increase rate: 5 ± 2 °C/min)	

Excerpts from IEC 62133 are Copyright © 2002, IEC, Geneva, Switzerland.www.iec.ch

Copyright © 2004 IEEE. All rights reserved.

Copyright The Institute of Electrical and Electronics Engineers, Inc.
Provided by IHS under license with IEEE
No reproduction or networking permitted without license from IHS
Not for Resale

Table B.2—Comparison of cell testing standards *(continued)*

Test title	UL 1642-1995	IEC 62133:2002	UN ST/SG/AC.10/11/Rev.4-2003
14) Test for flaming particles (environmental)	Procedure: Fully charged sample is to be placed on a steel wire mesh screen and burned by burner. A panel of cheesecloth is to be positioned vertically 0.91 m from the wire screen. The test sample is to be positioned so that flaming particles are ejected toward the cheesecloth panel.		
15) Projectile test (environmental)	Procedure: Fully charged sample is to be placed on a steel wire mesh screen covered by a metal wire cage and burned by burner.		

Excerpts from IEC 62133 are Copyright © 2002, IEC, Geneva, Switzerland.www.iec.ch

Copyright © 2004 IEEE. All rights reserved.

Copyright The Institute of Electrical and Electronics Engineers, Inc.
Provided by IHS under license with IEEE
No reproduction or networking permitted without license from IHS
Not for Resale

B.2 Battery pack design verification tests

Table B.3 illustrates suggested methods to address design verification of specific functions and attributes of the battery packs discussed in Clause 6. These specific tests procedures and requirements are designed to confirm that the cells have the desired performance characteristics and are robust enough to resist abuse conditions should they arise.

B.2.1 Electrical tests

Table B.3—Brief description of battery pack electrical tests

1) Continuous charge test	Purpose	The purpose of this test is to evaluate the ability of the battery pack to withstand continuous charging for an extended time period.
	Test procedure	a) Stage 1—The battery pack shall be discharged using a constant current of 0.2 I_tA until the battery voltage reaches the specified end-of-discharge voltage at an ambient temperature of 20 ± 5 °C. b) Stage 2—The battery pack shall be charged using a charger supplied or recommended by the manufacturer or an electrical simulation of that charger, after which the battery shall be held at the specified end-of-charge voltage for a total period of 28 days. A total of five batteries shall be tested in an ambient temperature of 20 ± 5 °C.
	Requirement	NL (no leakage) NEL (no visual evidence of leakage of electrolyte) NV (no venting) NE (no explosion) NF (no fire)
2) Over-discharge/ Overcharge test	Purpose	The purpose of this test is to evaluate the ability of the battery pack to withstand repeated over-discharge/overcharge.
	Test procedure	a) Stage 1—The battery pack shall be charged using the procedure described in IEC 61960-2:2001, clause 4.1. b) Stage 2—The battery pack shall be discharged using a constant current of 0.2 I_tA until the battery circuitry terminates discharge or until the battery voltage reaches 0V at an ambient temperature of 20 ± 5 °C. c) Stage 3—The battery pack shall be charged using the recommended charge current and end-of-charge voltage for a period of 12 h at an ambient temperature of 20 ± 5 °C. Stage 2 and Stage 3 shall be repeated 30 times. Five separate samples shall be evaluated.
	Requirement	NE (no explosion) NF (no fire) The exterior temperature of the battery shall not exceed 150 °C.

Excerpts from IEC 61960-2 are Copyright © 2001, IEC, Geneva, Switzerland.www.iec.ch

Copyright © 2004 IEEE. All rights reserved.

Copyright The Institute of Electrical and Electronics Engineers, Inc.
Provided by IHS under license with IEEE
No reproduction or networking permitted without license from IHS
Not for Resale

Table B.3—Brief description of battery pack electrical tests *(continued)*

3) Short-circuit test	Purpose	The purpose of this test is to confirm the ability of the battery pack to withstand an external short-circuit condition.
	Test procedure	a) Stage 1—The battery pack shall be charged using the procedure described in IEC 61960-2:2001, clause 4.1. b) Stage 2—Battery pack shall be subjected to a short-circuit condition with a total external resistance less than 50 milliohms. Tests shall be conducted on five samples at 20 ± 5 °C. The test shall continue until the electronic circuit or the current limiting device prevents further discharge, or the battery voltage falls below 0.1 V, and the case temperature has returned to the original ambient temperature, unless fire or explosion occurs first.
	Requirement	NE (no explosion) NF (no fire) The exterior temperature of the battery shall not exceed 150 °C.
4) Overcharge test (simulation of use of an inappropriate charger or charger malfunction)	Purpose	This test is to evaluate the ability of the battery to withstand a charger malfunction where the upper voltage is only limited by the charger.
	Test procedure	Batteries fully charged in accordance with IEC 61960-2:2001, clause 4.1, shall be subjected to excessive current, simulating operation with defective charger. The battery shall be discharged at 20 ± 5 °C, at a constant current of 0.2 I_tA, to a specified final voltage and shall be subjected to the recommended charger current I_{rec} specified by the manufacturer. The duration of the test shall be calculated as: Time (h) = 2.5 C_5/I_{rec} where I_{rec} is the recommended constant current charge in amperes (A) Tests are to be conducted in an ambient temperature of 20 ± 5 °C
	Requirement	NE (no explosion) NF (no fire)

Excerpts from IEC 61960-2 are Copyright © 2001, IEC, Geneva, Switzerland.www.iec.ch

B.2.2 Mechanical/environmental tests

See Table B.4.

B.3 Host device

The following subclause illustrates suggested methods to address design verification of specific functions and attributes of the host device. These specific test procedures and requirements are designed to confirm that the host device and battery pack are robust enough to resist abuse conditions should they arise.

B.3.1 Electrical design verification

B.3.1.1 Host device input overvoltage protection

An input dc voltage higher than the specified maximum input voltage should be applied to the dc input terminal of the host device for a predefined level and time duration specified by the host device manufacturer. The host device overvoltage protection circuit should be triggered without any resulting component damage or hazard. In extreme circumstances where an extremely high voltage is applied, only the components directly connected to the input terminal should be damaged. Damage, if it occurs, should be limited to components directly connected to the input terminal. The host device should not pass through any overvoltage to the battery pack.

Copyright © 2004 IEEE. All rights reserved.

Copyright The Institute of Electrical and Electronics Engineers, Inc.
Provided by IHS under license with IEEE
No reproduction or networking permitted without license from IHS
Not for Resale

Table B.4—Brief description of battery pack mechanical/environmental tests

1) Shock test	Purpose	The purpose of this test is evaluate the ability of the battery pack to withstand mechanical shock by performing a shock test and a high acceleration test carried out in accordance with IEC 60068-2-27:1987 [B4].
	Test procedure	a) Stage 1—The battery pack shall be charged using the procedure described in IEC 61960-2:2001, clause 4.1. b) Stage 2—The battery shall be secured to the testing machine by means of a rigid mount, which will support all mounting surfaces of the battery. The battery shall be subjected to a total of three shocks of equal magnitude. The shocks shall be applied in each of three mutually perpendicular directions unless the battery has only two axes of symmetry in which case only two directions shall be tested. Each shock shall be applied in a direction normal to the face of the battery. For each shock the battery shall be accelerated in such a manner that during the initial 3 milliseconds the minimum average acceleration is 75 g (where g is the local acceleration due to gravity). The peak acceleration shall be between 125 g and 175 g. Five batteries shall be tested at 20 ± 5 °C. The waveform could be either sawtooth or half-sine.
	Requirement	NL (no leakage) NEL (no visual evidence of leakage of electrolyte) NV (no venting) NE (no explosion) NF (no fire)
2) Vibration test	Purpose	The purpose of this test is to confirm the ability of the battery pack to withstand mechanical vibration by performing a vibration test carried out in accordance with UN ST/SG/AC.10/11/Rev.4-2003. The test samples from 4.2.1 shall be used.
	Test procedure	a) Stage 1—The battery pack shall be charged using the procedure described in IEC 61960-2:2001, clause 4.1. b) Stage 2—The battery shall be subjected to a simple harmonic motion with amplitude of 0. 8 mm (1.6 mm total maximum excursion). The frequency of the harmonic motion shall be increased and decreased at a rate of 1Hz ± 0.055 Hz per minute between limits of 10 Hz and 55 Hz. Five samples shall be tested in three mutually perpendicular directions unless it has only two axes of symmetry, in which case only two directions shall be tested. The battery shall be tested at 20 ± 5 °C.
	Requirement	NL (no leakage) NEL (no visual evidence of leakage of electrolyte) NV (no venting) NE (no explosion) NF (no fire)

Excerpts from IEC 61960-2 are Copyright © 2001, IEC, Geneva, Switzerland.www.iec.ch

Copyright © 2004 IEEE. All rights reserved.

Copyright The Institute of Electrical and Electronics Engineers, Inc.
Provided by IHS under license with IEEE
No reproduction or networking permitted without license from IHS
Not for Resale

Table B.4—Brief description of battery pack mechanical/environmental tests *(continued)*

3) Thermal shock test	Purpose	Thermal shock causes considerable mechanical stress on battery hardware and occurs when a battery undergoes very large and rapid temperature changes. The purpose of this test is to evaluate the ability of the battery pack to withstand thermal shock by varying the storage temperature of a battery between upper and lower limits.
	Test procedure	a) Stage 1—The battery pack shall be charged using the procedure described in IEC 61960-2:2001, clause 4.1. b) Stage 2—The battery shall be stored for 48 h in an ambient temperature of 75 ± 2 °C, moved to -20 ± 2 °C within 5 min and stored for 6 h, followed by storage for at least 24 h in an ambient temperature of 20 ± 5 °C. Five sample batteries shall be tested.
	Requirement	NL (no leakage) NEL (no visual evidence of leakage of electrolyte) NV (no venting) NE (no explosion) NF (no fire)
4) Altitude simulation (low pressure) test	Purpose	Exposing a battery to low ambient pressure places stress on mechanical components and may cause leakage. The purpose of this test is to evaluate the ability of the battery pack to withstand low ambient pressure. This test simulates an altitude of 15.240 m.
	Test procedure	a) Stage 1—The battery pack shall be charged using the procedure described in IEC 61960-2:2001, clause 4.1. b) Stage 2—The battery shall be placed in a vacuum chamber from which air is subsequently pumped down to a pressure equal to or less than 11.6 kPa and held at that pressure for 6 h in an ambient temperature of 20 ± 5 °C. Five sample batteries shall be tested.
	Requirement	NL (no leakage) NEL (no visual evidence of leakage of electrolyte) NV (no venting) NE (no explosion) NF (no fire)
5) Crush Test	Purpose	The purpose of this test is to confirm that a moderate crushing force on a battery case does not cause fire or explosion.
	Test procedure	a) Stage 1—The battery pack shall be charged using the procedure described in IEC 61960-2:2001, clause 4.1. b) Stage 2—The battery shall be exposed to a moderate crushing force, using a crushing apparatus capable of applying 114 ± 2 Kg of force across the total test surface of the battery, according to the procedure described in IEC61960-2:2001, clause 5.2.2.1. The battery is placed between two flat surfaces 12.7 mm or thicker. The force is gradually increased until an abrupt voltage drop of 1/3, at which time the pressure is released or held at the value (114 ± 2 kg) stated previously for one min. A cylindrical or prismatic battery is to be crushed with its longitudinal axis parallel to the flat surface of the crushing apparatus. A prismatic battery is also to be rotated 90° around its longitudinal axis so that both the wide and narrow sides will be subjected to the crushing force. Each sample battery is to be subjected to a crushing force in only one direction. Therefore, separate samples are to be used for each test.
	Requirement	NE (no explosion) NF (no fire)

Excerpts from IEC 61960-2 are Copyright © 2001, IEC, Geneva, Switzerland.www.iec.ch

Copyright © 2004 IEEE. All rights reserved.

Copyright The Institute of Electrical and Electronics Engineers, Inc.
Provided by IHS under license with IEEE
No reproduction or networking permitted without license from IHS
Not for Resale

Table B.4—Brief description of battery pack mechanical/environmental tests *(continued)*

6) Free fall test	Purpose	This test is to evaluate the ability of a battery to withstand mechanical shock by performing a free fall test in accordance with IEC60068-2-32:1975 [B5].
	Test procedure	Each battery shall be dropped six times from 1.0 m onto a hardwood floor. The batteries shall be dropped two times per plane when released to obtain impacts in several positions. Batteries shall be tested in an ambient temperature of 20 ± 5 °C.
	Requirement	NV (no venting) NE (no explosion)
7) Thermal exposure test	Purpose	The purpose of this test is to evaluate the thermal stability of the battery at elevated temperatures.
	Test procedure	a) Stage 1—The battery pack shall be charged using the procedure described in IEC 61960-2:2001, clause 4.1. b) Stage 2—The battery shall be placed in an explosion proof, gravity convection or circulating air oven, and the oven temperature shall be raised at a rate of 5 ± 2 °C per min until the oven temperature reaches 130 ± 2 °C. Then the oven shall be maintained at 130 ± 2 °C for 30 min. Five sample batteries shall be tested.
	Requirement	NE (no explosion) NF (no fire)
8) ESD	Purpose	This test is to evaluate the ability of the battery pack to withstand electrostatic discharge.
	Test procedure	This test shall be carried out in accordance with IEC 61000-2-4:2002, electronic discharge requirements, clauses 1–8, and conducted on a battery pack containing electronic protection devices, such as diodes, transistors, or integrated circuits.
	Requirement	The battery pack shall be tested for contact discharge at 4 kV and air discharge at 8 kV.
9) Mould stress test	Purpose	This test is to evaluate the effects of an elevated temperature environment on a battery. Batteries are to be exposed to a moderately high temperature.
	Test procedure	The battery shall be placed in a full draft circulating air oven maintained at a uniform temperature of 70 ± 2°C. The batteries are to remain in the oven for 7 h, after which they are to be removed and allowed to return to room temperature for examination.
	Requirement	No distortion beyond the dimensions specified for the battery, and no evidence of mechanical damage (exposure of internal components or leakage of electrolyte).

Excerpts from IEC 61960-2 are Copyright © 2001, IEC, Geneva, Switzerland.www.iec.ch

B.3.1.2 Host device input overcurrent protection

In systems with the capability to measure dc input current, an input current higher than the specified maximum input current should be applied to the dc input terminal of the host device for a predefined level and time duration specified by the host device manufacturer. The host device overcurrent protection circuit should be triggered without any resulting component damage or hazard. In extreme circumstances where an extremely high current is applied, damage should be limited to the components directly connected to the input terminal. The host device should not pass overcurrent through to the battery pack.

Copyright © 2004 IEEE. All rights reserved.

Copyright The Institute of Electrical and Electronics Engineers, Inc.
Provided by IHS under license with IEEE
No reproduction or networking permitted without license from IHS
Not for Resale

B.3.1.3 Charger output overvoltage protection test

A dc voltage higher than the specified maximum output charging voltage should be applied at the charger output. The charging subsystem should detect the occurrence and suspend charging within a specified time period defined by the system manufacturer, without any resulting component damage or hazard. Charging should be suspended until the voltage falls below the maximum specified charging voltage.

B.3.1.4 Active charger communication test

A break in communications between the active charging subsystem, embedded controller, and battery pack should be applied (one at a time) during the charging of a battery pack. The duration of the break is defined by the system manufacturer. In each case, the charging subsystem should suspend charging of the battery pack within a specified time, without resulting in component damage or a hazard.

B.3.1.5 Passive charger test

In systems where an active charging subsystem is not implemented, verify that the host device correctly obtains the battery pack identification data.

B.3.1.6 Charging algorithm test—battery voltage

An example of a charging algorithm flowchart is shown in Figure B.1.

B.3.1.6.1

An overvoltage condition should be applied to the battery charging terminals on the host device battery connector. The charging subsystem should not initiate charging while the overvoltage condition exists.

B.3.1.6.2

An undervoltage condition should be applied to the battery charging terminals on the host device battery connector. The charging subsystem should not initiate normal charging while the undervoltage condition exist. A precharge function may be initiated in systems supporting that function.

B.3.1.7 Charging algorithm test—charging time-out

A load which sinks nominal charging current and presenting constant voltage should be applied to the battery charging terminals of the host device battery connector. The charging subsystem should time-out after a specified time and charging should be suspended without resulting component damage or hazard.

B.3.1.8 Charging algorithm test—overcurrent

A simulated overcurrent condition, such as connecting a load exceeding specified charging current, should be applied to the terminals. The system should suspend charging within a specified time without resulting component damage or hazard.

Copyright © 2004 IEEE. All rights reserved.

Copyright The Institute of Electrical and Electronics Engineers, Inc.
Provided by IHS under license with IEEE
No reproduction or networking permitted without license from IHS Not for Resale

B.3.1.9 ESD protection test

The ability of the host device to withstand electrostatic discharge should be verified. The parameters for the ESD test for the host device and system should be determined by the system manufacturer.

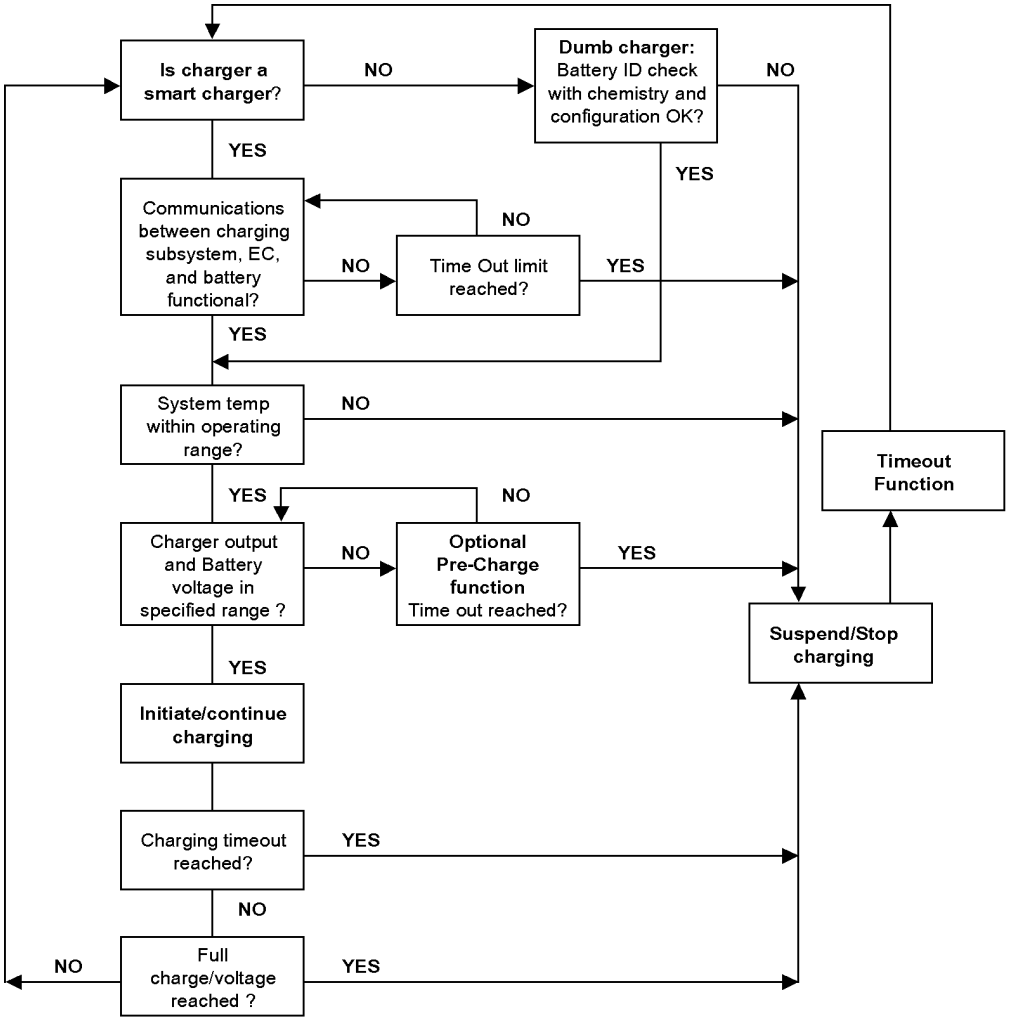

Figure B.1—Example flowchart of a charging algorithm

B.3.2 Environmental tests

B.3.2.1 Charging algorithm temperature test

The system with a non-fully charged battery should be placed in the powered off state in a temperature controlled environment that is just outside the specified charging temperature range. Charging should be suspended when the system is switched on without resulting component damage or hazard. In systems which support a reduced charging algorithm, the charging subsystem may reduce the charge current instead of suspending charging.

B.3.2.1.1

The system with a non-fully charged battery should be placed inside a temperature controlled environment and switched on while remaining inside the specified operating temperature range. Charging should be

Copyright © 2004 IEEE. All rights reserved.

Copyright The Institute of Electrical and Electronics Engineers, Inc.
Provided by IHS under license with IEEE
No reproduction or networking permitted without license from IHS
Not for Resale

initiated. The temperature should then be brought outside the operating range. The system should suspend charging without resulting component damage or hazard. In systems which support a reduced charging algorithm, the charging subsystem may reduce the charge current instead of suspending charging.

B.3.2.1.2 Temperature cycling test

The manufacturer may perform a number of cycles of the test as specified in B.3.2.1.1 by bringing the temperature back down inside the operating range to complete the cycle. Charging should resume when the system temperature falls within the operating range with a hysteresis to be determined by the system manufacturer.

B.3.2.1.3 Humidity test

High humidity may be encountered in many parts of the world. The humidity test for the host device and system should be determined by the system manufacturer.

B.3.2.1.4 High altitude test

Lower pressure may be encountered in an aircraft transport. The high altitude test for the host device should be determined by the system manufacturer.

B.3.3 Mechanical tests

Host device and battery pack mechanical tests such as shock and vibration and should be determined by the system manufacturer.

Copyright © 2004 IEEE. All rights reserved.

Copyright The Institute of Electrical and Electronics Engineers, Inc.
Provided by IHS under license with IEEE
No reproduction or networking permitted without license from IHS Not for Resale

Annex C

(informative)

Failure mode and effects analysis (FMEA)

C.1 FMEA techniques

This annex is designed to illustrate failure mode and effects analysis (FMEA) techniques and the procedures that a designer uses to arrive at a complete system analysis.

C.1.1 Example 1

FMEA 2 (pack) identifies a control scheme distributed over the pack and host device for overcurrent potentially caused by the pack short circuit due to a connector contacting an external metal object, such as when packed in a computer bag with a metal pen. FMEA 4 identifies the end-user responsibilities as: *Don't allow the connector to come in contact with any metal objects.* FMEA 4 also identifies producer responsibilities as: *Pack has circuit and/or mechanical design to protect against external short circuit.* Reliable total system operation requires a label or other notification for the end user: *Don't allow the connector to come in contact with any metal objects.*

C.1.2 Example 2

The designer conducts FMEAs 1, 2, 3, and 4 to determine whether or not protection circuits are required to prevent hazards from occurring as a result of two faults in reasonable and foreseeable misuse. The designer determined the best location(s) for redundant protection circuits. Building on example 1, the designer implements a mechanical protection device to protect against external pack short circuit. This mechanical protection device passes all in-spec reliability and drop tests. However, the designer's thorough FMEA analysis shows that the mechanical protection device may fail when subject to a common scenario of dropping the notebook to the floor or stuffing the notebook in a briefcase (fault 1: broken connector barrier). In this event, a second protection method shall be employed, such as an overcurrent protection (OCP) circuit. However, if the OCP fails to operate due to a manufacturing defect (fault 2) then the cell level short-circuit protection could still provide protection against a potential hazard from the two faults listed. (One fault is a broken connector from reasonable and foreseeable misuse. The second fault is a circuit failure caused by a manufacturing defect).

C.1.3 Example 3

The charging system consists of an ac/dc power supply with a 20 V output, a charge control circuit (control and MOSFET) in the host device, a single overvoltage protection circuit in the battery pack (control IC and MOSFET), and the four cells in series with a maximum voltage of 16.8 V. During the FMEA 4, the designer considers a situation involving two independent faults: a short circuit in the host device charge control FET (fault 1) and a short in the battery overvoltage FET (fault 2). In this situation, the 20 V power supply output would be passed directly to the cell stack. The designer knows that charging the cells to 5 V may lead to a hazard. To resolve this situation, a second overvoltage circuit is added to the battery pack. With this design, if the two faults described above occur, the second battery overvoltage circuit isolates the pack from the 20 V power supply.

Copyright © 2004 IEEE. All rights reserved.

Copyright The Institute of Electrical and Electronics Engineers, Inc.
Provided by IHS under license with IEEE
No reproduction or networking permitted without license from IHS
Not for Resale

C.2 A typical procedure for design analysis: FMEA

FMEA is a document produced to identify failure modes and their effects in new designs. All failure modes are ranked and weighted by RPN, so that they may be prioritized and corrected.

Essential questions to ask in the FMEA are:

— What elements of the design are most likely to produce defects?
— How can the defects be effectively eliminated or mitigated?
— Would your customer agree with the assignment of risk?

An example of a FEMA is shown in Figure C.1.

Once constructed, the FMEA ranks RPNs and assignments are made to develop and review changes to mitigate or eliminate the failure effect. Some failure effects may be so low in ranking that they are not corrected

The following provide additional information on conducting FMEA: *Guidelines for Failure Modes and Effects Analysis (FMEA) for Medical Devices* [B1], McDermott et al [B9], SAE J1739-2002 [B11], Stamatis [B13], Sutton [B14].

Copyright © 2004 IEEE. All rights reserved.

Copyright The Institute of Electrical and Electronics Engineers, Inc.
Provided by IHS under license with IEEE
No reproduction or networking permitted without license from IHS Not for Resale

Figure C.1—Design of potential FEMA

Product name	
Responsible	

Prepared by:	**Page ___ of ___**
FEMA date (orig) _____ (Rev) _____	

Design function	Potential failure mode	Potential failure effects	SEV	Potential causes of failure	OCC	Detection method	DET	RPN	Recommended actions	Resp.
Component, footprint design, assembly, process, engineering	Insufficient solder joints on SMT component	Motherboard failure of assembly test	4	Incorrect pad size, clogged stencil aperture	2	In-circuit test, visual inspection	2	16	Evaluate and correct pad size and stencil aperture size, modify stencil cleaning procedure	
								0		

Copyright © 2004 IEEE. All rights reserved.
Copyright The Institute of Electrical and Electronics Engineers, Inc.
Provided by IHS under license with IEEE
No reproduction or networking permitted without license from IHS
Not for Resale

Annex D

(informative)

Double fault analysis

D.1 Why two faults are specified in the FMEA

Protection mechanisms are intended to prevent specific situations from creating hazards, for example, a PTC resistor to limit current flow through a short circuit. Occasionally, a fault occurs in a protection mechanism that prevents its proper operation. The risk of creating a hazard is related to the probability of the fault occurrence. While the probability of fault occurrence in properly designed protection mechanisms is low, it is generally not zero. Reducing the probability of fault occurrence will reduce the risk of hazard creation as a result of this fault. Many times, it is impossible to reduce the fault probability of a single mechanism sufficiently to reach the desired risk level.

However, if the system contains multiple protection mechanisms, a hazard cannot occur unless all mechanisms simultaneously fail. It is very unlikely that two independent, redundant protection mechanisms will fail simultaneously. Therefore, by designing systems to withstand two independent faults, the occurrence of failures leading to hazards can be minimized.

D.1.1 Illustrative example for double fault concept

As stated in 1.2, once the designer has ascertained that the cell, pack, and host device all conform to all of their related subclause requirements of the standard, the assurance of the overall system's compliance is not finished until the designer completes a thorough design failure mode effects analysis (DFMEA). The DFMEA is completed to ensure a particular design does not allow two faults of any type to propagate a hazard.

This annex uses the term *double faults* to describe *two faults*, and it provides information for the user of this standard when completing the DFMEA to comply with this standard. Other standards provide approaches that use only one fault, whereas this standard provides approaches for using two faults. There are two parts to this double fault concept: a study on double fault simulation (see Table D.1) and a study on double fault factors (see D.1).

D.2 Study on double fault simulation

Table D.1 includes the study on double fault simulation. The study identifies: use situations, factors, supposed resulting faults, items to protect from hazards (with references), and consolidated proposed minimum requirements for double fault protection.

To calculate RPN:

1) Use severity and possibility.
2 Set weighting factors (for example, 1, 3, 5) for severity and possibility for each example.
3 Multiply the severity and possibility factors for each example.

In this example, RPN is shown on Table D.1 as follows:

a) Bold plus italic font for RPN values of 20–25

Copyright © 2004 IEEE. All rights reserved.

Copyright The Institute of Electrical and Electronics Engineers, Inc.
Provided by IHS under license with IEEE
No reproduction or networking permitted without license from IHS Not for Resale

b) Bold font for RPN values of 9–15

c) Regular font for RPN levels of 1–5

A summary diagram of the double fault analysis is shown in Figure D.1. The factors affecting battery pack design are identified in bubbles numbered 1–12. Some of the sources of the factors are also identified near each bubble. The important factors affecting battery performance were analyzed to identify those factors that are most important in designing battery packs.

As a result of this double fault analysis study, the more important factors in cell designs were identified. These most important factors are bolded, and the next most important factors are italics plus bold in Table D.1. This study is very thorough and may not be needed for each product FMEA.

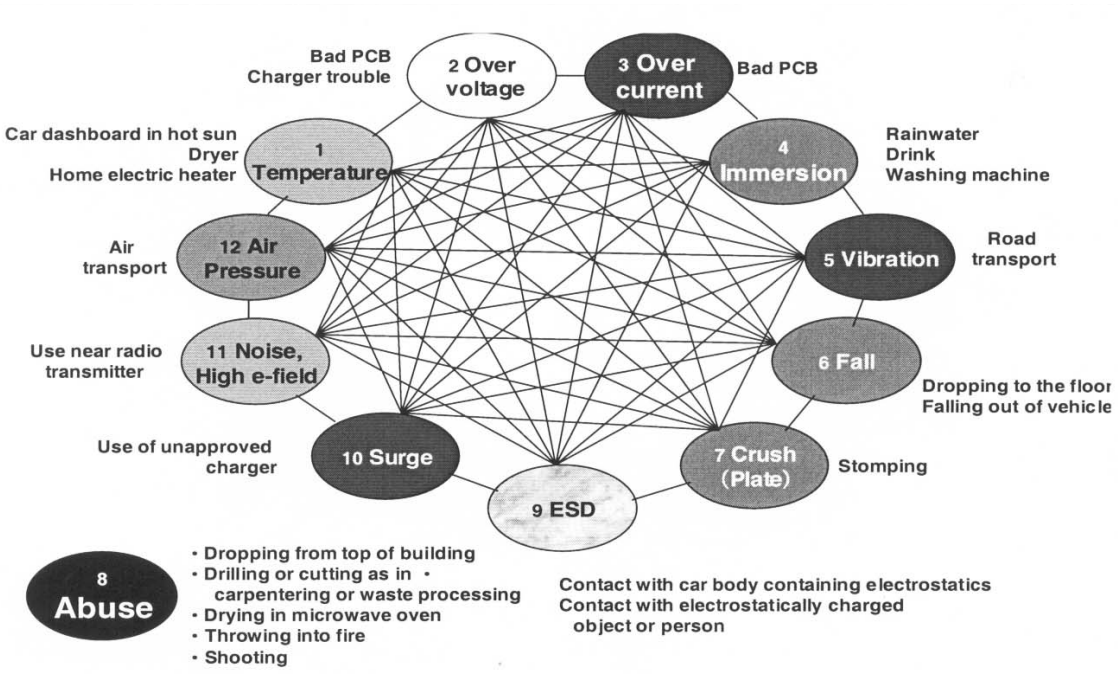

Figure D.1—Study on double fault factors

Copyright © 2004 IEEE. All rights reserved.

Copyright The Institute of Electrical and Electronics Engineers, Inc.
Provided by IHS under license with IEEE
No reproduction or networking permitted without license from IHS
Not for Resale

Copyright The Institute of Electrical and Electronics Engineers, Inc.
Provided by IHS under license with IEEE
No reproduction or networking permitted without license from IHS

Table D.1—Double fault simulation study

	Use situation	Factor	Supposed fault	Items to protect from hazards (see reference)	Proposed minimum requirements
1	A charger malfunctions when a PC is left on top of an electric home heater.		Charge voltage Charge current	7.1.2.1 7.1.2.2 8.2.1	Double protection is needed for the PC itself or battery pack.
2	A PC circuit is short-circuited and the PC is left on the top of an electric home heater.		Charge voltage Charge current	7.2.8 7.2.10 8.1.1.2 Annex B	Double protection is needed for the PC itself or battery pack.
3	A PC on the dashboard of a car in the hot sun is being charged with an automobile charger and the protection system against overvoltage malfunctions due to faulty PCB solder joint.	1 2	Temperature (voltage/ current), Protective device End-user abuse	5.5.6 6.5.4 8.1.1.2 8.1.1.4	Protected with fuse or PTC, there is no anomaly.
4	A PC, which is on an electric home heater, is charged by unapproved charger.	1 2 3	Charge voltage Charge current	7.1.2.2 7.2.8 7.2.10 8.1.1.2 Annex B	Double protection is needed for the PC itself or battery pack.
5	A PC on the top of electric home heater is charged by a charger with voltage control malfunction.	1 2 3	Charge voltage Charge current	6.5.3 6.5.4 7.1.2.2 7.2.8 8.1.1.2 Annex B	Double protection is needed for the PC itself or battery pack.

Copyright © 2004 IEEE. All rights reserved.

Not for Resale

Copyright The Institute of Electrical and Electronics Engineers, Inc.
Provided by IHS under license with IEEE
No reproduction or networking permitted without license from IHS

Table D.1—Double fault simulation study *(continued)*

	Use situation	Factor	Supposed fault	Items to protect from hazards (see reference)	Proposed minimum requirements
6	While a PC on the dashboard of a car in the hot sun is being charged by an automobile charger, the protection system against overvoltage and overcurrent malfunctions.	1 2 3	Charge voltage Charge current Protection circuit Temperature (voltage/ current) *Protective device End-user abuse	6.5.4 6.7.3 8.1.1.2 8.1.1.4	Protected with fuse or PTC, there is no anomaly.
7	A PC, on the dashboard of a car in the hot sun, is charged by unapproved charger.	1 2 3 5	Charge voltage Charge current	7.1.2.1 7.1.2.2 7.2.8 7.2.10 8.1.1.4 Annex B	Double protection is needed for the PC itself or battery pack.
8	A PC, on the dashboard of a car in the hot sun, is charged by charger with voltage control malfunction.	1 2 3 5	Charge voltage Charge current	7.1.2.1 7.1.2.2 7.2.8 7.2.10 Annex B	Double protection is needed for the PC itself or battery pack.
9	An automobile charger is charging a PC on the dashboard of a car in the hot sun and the overcurrent protection failed due to faulty PCB solder joint.	1 3	Charge voltage Charge current	5.5.6 6.7.3 8.1.1.2 8.1.1.4	Double protection is needed for the PC itself or battery pack.
10	A PC, wet with rain or spilled drink, is dried by a halogen lamp.	1 4	PC motherboard trouble Circuit trouble	6.4 8.1.1.2	Double protection is needed for the PC itself or battery pack.
11	A PC, wet with rain or a spilled drink, is dried by an electric hair dryer.	1 4	PC motherboard trouble Circuit trouble	7.4 8.1.1.2 Annex B	Double protection is needed for the PC itself or battery pack.

Not for Resale

Copyright © 2004 IEEE. All rights reserved.

Copyright The Institute of Electrical and Electronics Engineers, Inc.
Provided by IHS under license with IEEE
No reproduction or networking permitted without license from IHS

Table D.1—Double fault simulation study *(continued)*

	Use situation	Factor	Supposed fault	Items to protect from hazards (see reference)	Proposed minimum requirements
12	A PC is left on the dashboard of a car sitting in the hot sun.		Charge voltage Charge current Protection circuit Temperature (voltage/ current) *Protective device End-user abuse	Annex B	Protected with fuse or PTC, there is no anomaly.
13	An unapproved automobile charger is used to charge a PC on the dashboard of a car sitting in the hot sun with vibration from the engine.	1 5	Charge voltage Charge current Protection circuit	8.1.1.2 8.1.1.4 Annex B	Double protection is needed for the PC itself or battery pack.
14	While the engine is running, the PC on the dashboard of a car sitting in the hot sun is short-circuited with a key ring or metallic object.	1 3 5	Not found (signal system)	7.4 Annex B	
15	A car is running with a PC on the dashboard in the hot sun and the PCB circuit has a short-circuit malfunction.	1 3 5	Overcurrent	7.2.10 Annex B	Double protection is needed for the PC itself or battery pack.
16	A PC falls to the ground from a bicycle carrier while running in the hot sun.	1 5 6	Not found	6.1.2 7.3.2 8.1.1.1 Annex B	
17	A PC, which was left on top of an electric home heater, falls to the floor.	1 6	Charge voltage Charge current	7.2.8 7.2.10 8.1.1.2 Annex B	Double protection is needed for the PC itself or battery pack.
18	A PC on the dashboard of a car running in the hot sun is dropped to the ground.	1 6	Not found	Annex B	
19	A PC on the dashboard of a car in the hot sun falls to the floor during charge by automobile charger.	1 6	Charge voltage Charge current	8.1.1.2 8.1.1.4 Annex B	Double protection is needed for the PC itself or battery pack.

Copyright © 2004 IEEE. All rights reserved.

Not for Resale

Copyright The Institute of Electrical and Electronics Engineers, Inc.
Provided by IHS under license with IEEE
No reproduction or networking permitted without license from IHS
Not for Resale

Table D.1—Double fault simulation study *(continued)*

	Use situation	Factor	Supposed fault	Items to protect from hazards (see reference)	Proposed minimum requirements
20	When a PC is charged by automobile charger in a car in the hot sun, either the battery pack or PC is stepped on.	1 7	Charge voltage Charge current	8.1.1.2 8.1.1.4 Annex B	Double protection is needed for the PC itself or battery pack.
21	The battery left on the dashboard of a car in a hot sun is crushed by mistake during an activity, such as home carpentering, D.I.Y.	1 8	Classify to abuse	8.1.1.1 8.1.1.2 Annex B	
22	A battery, which was left in a hot place in the middle of summer, is shot by mistake.	1 8	Classify to abuse	8.1.1.1 8.1.1.2	
23	A battery from PC on the dashboard of a car in hot sun is removed and electrostatically discharges by contact against a charged car body.	1 9	Charge voltage Charge current	6.10.3 8.1.1.2	Double protection is needed for the PC itself or battery pack.
24	A large current surge occurs while a PC on the dashboard of a car in the hot sun is charged by unapproved charger.	1 10	Charge current	7.1.2.1 7.1.2.2 8.1.1.2 Annex B	Double protection is needed for the PC itself or battery pack.
25	A PC on the dashboard of a car in the hot sun is charged by a charger (host) near a radio transmitter.	1 11	Charge voltage Charge current	8.1.1.2 Annex B Immunity	Double protection is needed for the PC itself or battery pack.
26	A PC is left in air cargo with extra low temperature and low air pressure.	1 12	Not found	8.1.1.2 Annex B	
27	***A battery pack whose protection circuit malfunctions (activation impossible of protection function) is charged by a charger whose voltage control malfunctions.***	***2 3***	***Charge voltage Charge current***	***6.5.4 7.1.2.1***	***Double protection is needed for the PC itself or battery pack.***
28	***A PC with a short-circuited PCB has a battery pack whose protection circuit malfunctions (activation impossible of protection function).***	***2 3***	***Charge voltage Charge current***	***6.5.4 7.1.2.2***	***Double protection is needed for the PC itself or battery pack.***

Copyright © 2004 IEEE. All rights reserved.

Copyright The Institute of Electrical and Electronics Engineers, Inc.
Provided by IHS under license with IEEE
No reproduction or networking permitted without license from IHS

Table D.1—Double fault simulation study *(continued)*

	Use situation	Factor	Supposed fault	Items to protect from hazards (see reference)	Proposed minimum requirements
29	Battery pack's protection circuitry against overvoltage and overcurrent malfunctions.	2 3	Charge voltage Charge current	6.5.4 7.1.2.1	Double protection is needed for the PC itself or battery pack.
30	Battery pack's protection circuitry against overvoltage malfunctions and charger or adaptor also malfunctions.	2 3	Charge voltage Charge current	6.5.4 7.1.2.1	Double protection is needed for the PC itself or battery pack.
31	Battery pack's protection circuitry against overcurrent and charging system malfunctions.	2 3	Charge voltage Charge current	6.5.4 7.1.2.1	Double protection is needed for the PC itself or battery pack.
32	A PC, which got wet with rain or spilled drink, is charged by an unapproved charger.	2 3 4	PC motherboard trouble Circuit trouble	7.1.2.2 7.3.2 7.4 8.1.1.2	Double protection is needed for the PC itself or battery pack.
33	A PC, which got wet with rain or spilled drink, is charged by a charger whose voltage control system malfunctions.	2 3 4	PC motherboard trouble Circuit trouble	6.5.3 6.5.4 6.5.5 7.1.2.2 7.2.9 7.4 8.1.1.2	Double protection is needed for the PC itself or battery pack.
34	Host or battery pack whose charging system malfunctions is subjected to heavy vibration during transport or in other situations.	2 3 5	Charge voltage Charge current	6.5.4 7.1.2.1 7.1.2.2 Annex B	Double protection is needed for the PC itself or battery pack.
35	A PC, which fell to the floor, is charged by a charger whose voltage control system malfunctions.	2 3 6	PC motherboard trouble Circuit trouble Charge voltage Charge current	6.5.3 6.5.4 7.1.2.2 7.2.5.8 7.2.9 7.3.2 Annex B	Double protection is needed for the PC itself or battery pack.

Copyright © 2004 IEEE. All rights reserved.

Not for Resale

Copyright The Institute of Electrical and Electronics Engineers, Inc.
Provided by IHS under license with IEEE
No reproduction or networking permitted without license from IHS

Table D.1—Double fault simulation study *(continued)*

	Use situation	Factor	Supposed fault	Items to protect from hazards (see reference)	Proposed minimum requirements
36	Host or battery pack whose charging system malfunctions falls from the top of a building (10 m).	2 3 6	Classify to abuse	8.1.1.1	
37	Host or battery pack whose charging system malfunctions is stepped on.	2 3 7	Charge voltage Charge current	6.5.4 7.1.2.1 7.1.2.2 Annex B	Double protection is needed for the PC itself or battery pack.
38	Host or battery pack whose charging system malfunctions is cut or drilled in the process of waste disposal or other treatments.	2 3 8	Classify to abuse	8.1.1.1	
39	Host or battery pack whose charging system malfunctions comes to contact with electrostatically charged person or object.	2 3 9	Charge voltage Charge current	6.10.3 7.1.2.1 7.1.2.2	Double protection is needed for the PC itself or battery pack.
40	Host or battery pack whose charging system malfunctions is inserted in a PC or becomes subject to electrical surges at the moment of startup.	2 3 10	Charge voltage Charge current	6.5.4 7.1.2.1 7.1.2.2 Annex B	Double protection is needed for the PC itself or battery pack.
41	Host or battery pack whose charging system malfunctions is subject to high electric field produced by radio transmitter or other equipment.	2 3 11	Charge voltage Charge current	Immunity 6.5.4 7.1.2.1 7.1.2.2	Double protection is needed for the PC itself or battery pack.
42	Host or battery pack whose charging system malfunctions and becomes subject to low air pressure during air or other transport.	2 3 12	Charge voltage Charge current	7.1.2.1 7.1.2.2 Annex B	Double protection is needed for the PC itself or battery pack.
43	Battery pack whose protection function against overvoltage malfunctions is subject vibration.	2 5	Charge voltage	6.5.4 Annex B	Double protection is needed for the PC itself or battery pack.
44	**Battery pack whose protection function against overvoltage malfunctions is dropped and falls to the ground.**	**2** **6**	**Charge voltage**	**6.5.4**	**Double protection is needed for the PC itself or battery pack.**

Copyright © 2004 IEEE. All rights reserved.
Not for Resale

Copyright The Institute of Electrical and Electronics Engineers, Inc.
Provided by IHS under license with IEEE
No reproduction or networking permitted without license from IHS

Table D.1—Double fault simulation study *(continued)*

	Use situation	Factor	Supposed fault	Items to protect from hazards (see reference)	Proposed minimum requirements
45	Battery pack whose protection function against overvoltage malfunctions is stepped on.	2 7	Charge voltage	6.5.4	Double protection is needed for the PC itself or battery pack.
46	Battery pack whose protection function against overvoltage malfunctions is drilled or cut by mistake during carpentry or other work.	2 8	Classify to abuse	8.1.1.1	
47	Battery pack whose protection function against overvoltage malfunctions becomes subject to ESD during its use.	2 9	Protection circuit voltage and current	6.5.4 6.10.3 Annex B	Double protection is needed for the PC itself or battery pack.
48	**Battery pack whose protection function against overvoltage malfunctions becomes subject to electrical surges at the moment of powering up.**	**.2** **10**	**Protection circuit voltage and current**	**6.5.4** **7.1.2.1** **7.1.2.2**	**Double protection is needed for the PC itself or battery pack.**
49	Battery pack whose protection function against overvoltage malfunctions becomes subject to high electric field radio transmitter at the moment of initiating charge.	2 11	Protection circuit voltage and current Charge voltage Charge current	Immunity 6.5.4 7.1.2.1 7.1.2.2	Double protection is needed for the battery itself or battery pack.
50	Battery pack whose protection function against overvoltage malfunctions is exposed to low air pressure (during air transport).	2 12	Protection circuit voltage	6.5.4 Annex B	Double protection is needed for the PC itself or battery pack.
51	Battery pack whose protection function against overcurrent malfunctions is subject to vibration from outside.	3 5	Protection circuit current	6.5.4 Annex B	Double protection is needed for the PC itself or battery pack.
52	Battery pack whose protection function against overcurrent malfunctions falls from the top of a building.	3 6	Classify to abuse	8.1.1.1	
53	Battery pack whose protection function against overcurrent malfunctions is stepped on.	3 7	Protection circuit current	6.5.4	Double protection is needed for the PC itself or battery pack.

Copyright © 2004 IEEE. All rights reserved.

Not for Resale

Copyright The Institute of Electrical and Electronics Engineers, Inc.
Provided by IHS under license with IEEE
No reproduction or networking permitted without license from IHS

Table D.1—Double fault simulation study *(continued)*

	Use situation	Factor	Supposed fault	Items to protect from hazards (see reference)	Proposed minimum requirements
54	Battery pack whose protection function against overcurrent malfunctions is drilled or cut because it is judged as waste by mistake.	3 8	Classify to abuse	8.1.1.1	
55	Battery pack whose protection function against overcurrent malfunctions comes in contact with electrostatically charged persons or objects.	3 9	Protection circuit voltage and current	6.5.4 6.10.3 Annex B	Double protection is needed for the PC itself or battery pack.
56	**Battery pack whose protection function against overcurrent malfunctions is subject to large electrical surges at the moment of powering-up.**	**3** **10**	**Protection circuit voltage and current**	**6.5.4** **Annex B**	**Double protection is needed for the PC itself or battery pack.**
57	Battery pack whose protection function against overcurrent malfunctions becomes subject to high electric field produced by a radio transmitter or other equipment.	3 11	Protection circuit voltage and current	Immunity 6.5.4 Annex B	Double protection is needed for the PC itself or battery pack.
58	Battery pack whose protection function against overcurrent malfunctions is transported by airplane or other means under low air pressure.	3 12	Protection circuit current	6.5.4 Annex B	Double protection is needed for the PC itself or battery pack.
59	***Battery pack put into a washing machine by mistake is washed with detergent.***		***Protection circuit voltage and current***	***6.11.5*** ***8.1.1.2*** ***Annex B***	***Double protection is needed for the PC itself or battery pack.***
60	A PC gets wet with rain or spilled drink and its circuit is short-circuited.		PC motherboard trouble Circuit trouble	6.2.1 7.2.10 7.4 8.1.1.2	Double protection is needed for the PC itself or battery pack.
61	A PC, which is dropped to the floor, gets wet with a spilled drink.	4 6	PC motherboard trouble Circuit trouble	7.4 8.1.1.2 Annex B	Double protection is needed for the PC itself or battery pack.

Not for Resale

Copyright © 2004 IEEE. All rights reserved.

Copyright The Institute of Electrical and Electronics Engineers, Inc.
Provided by IHS under license with IEEE
No reproduction or networking permitted without license from IHS

Table D.1—Double fault simulation study *(continued)*

	Use situation	Factor	Supposed fault	Items to protect from hazards (see reference)	Proposed minimum requirements
62	A PC, which got wet with rain or spilled drink, is dropped to the floor.	4 6	PC motherboard trouble Circuit trouble	7.4 8.1.1.2 Annex B	Double protection is needed for the PC itself or battery pack.
63	Battery pack, which received vibration, falls from top of building.	5 6	Classify to abuse	8.1.1.1	
64	Battery pack, which received vibration, is stepped on.	5 7	Protection circuit voltage and current	6.5.4 Annex B	Double protection is needed for the PC itself or battery pack.
65	Battery pack, which received vibration, is cut or drilled because it is judged as waste by mistake.	5 8	Classify to abuse	8.1.1.1	
66	Battery pack, which received vibration, comes to contact with electrostatically charged person or objects.	5 9	Protection circuit voltage and current	6.5.4 6.10.3 Annex B	Double protection is needed for the PC itself or battery pack.
67	Battery pack, which received vibration, becomes subject to electrical surges at the moment of startup.	5 10	Protection circuit voltage and current	6.5.4 Annex B	Double protection is needed for the PC itself or battery pack.
68	Battery pack, which received vibration, becomes subject to high electric field produced by a radio transmitter or other equipment.	5 11	Protection circuit voltage and current	6.5.4 Annex B	Double protection is needed for the PC itself or battery pack.
69	Battery pack, which received vibration, is transported by airplane or other means under low air pressure.	5 12	Protection circuit voltage and current	6.5.4 Annex B	Double protection is needed for the PC itself or battery pack.
70	A PC is dropped to the floor and its circuit is broken (short-circuited).		Short circuit in circuit	6.7 7.3.2 8.1.1.1 Annex B	Double protection is needed for the PC itself or battery pack.

Copyright © 2004 IEEE. All rights reserved.

Not for Resale

Copyright The Institute of Electrical and Electronics Engineers, Inc.
Provided by IHS under license with IEEE
No reproduction or networking permitted without license from IHS

Table D.1—Double fault simulation study *(continued)*

	Use situation	Factor	Supposed fault	Items to protect from hazards (see reference)	Proposed minimum requirements
71	A PC, which dropped to the floor, is charged with a battery pack that is wrongly inserted.	6 2 3	Charge voltage Charge current	6.9.2 7.2.5.1 7.2.5.4 7.3.2 8.1.1.8 Annex B	Double protection is needed for the PC itself or battery pack.
72	A PC, which dropped to the floor, is charged by an unauthorized charger.	6 2 3	Charge voltage Charge current	7.1.2.1 7.1.2.2 7.3.2 8.1.1.2 Annex B	Double protection is needed for the PC itself or battery pack.
73	A PC, which fell to the floor, is short-circuited by contact with a necklace or other metallic objects.	6 3	Short-circuit with external object	6.7.1 6.7.2 6.7.3 6.7.4 7.3.2 8.1.1.1 Annex B	
74	**PC drops into a water puddle.**	**6** **4**	**PC motherboard trouble** **Circuit trouble**	**8.1.1.2** **Annex B**	**Double protection is needed for the PC itself or battery pack.**
75	Battery pack, which fell from the top of a building, receives heavy vibration during transport.	6 5	Classify to abuse	8.1.1.1	
76	Battery pack, which fell from top of building, is cut and drilled because it is judged as waste by mistake.	6 8	Classify to abuse	8.1.1.1	
77	Battery pack, which fell from top of building, comes to contact with electrostatically charged person or objects.	6 9	Classify to abuse	8.1.1.1	

Not for Resale

Copyright © 2004 IEEE. All rights reserved.

Copyright The Institute of Electrical and Electronics Engineers, Inc.
Provided by IHS under license with IEEE
No reproduction or networking permitted without license from IHS

Table D.1—Double fault simulation study *(continued)*

	Use situation	Factor	Supposed fault	Items to protect from hazards (see reference)	Proposed minimum requirements
78	Battery pack, which fell from top of building, is inserted and becomes subject to electrical surges at the moment of startup.	6 10	Classify to abuse	8.1.1.1	
79	Battery pack or PC, which fell from top of building, becomes subject to high electric field produced by a radio transmitter or other equipment.	6 11	Classify to abuse	8.1.1.1	
80	Battery pack, which fell from top of building, becomes subject to low air pressure during air or other transport.	6 12	Classify to abuse	8.1.1.1	
81	Battery pack, which was subjected to high pressure from a heavy object, is cut and drilled because it is judged as waste by mistake.	7 8	Classify to abuse	8.1.1.1	
82	Battery pack, which subjected to high pressure from a heavy object, comes into contact with electrostatically charged person or objects.	7 9	Protection circuit voltage and current	6.5.4 6.10.3 Annex B	Double protection is needed for the PC itself or battery pack.
83	Battery pack, which subjected to high pressure from a heavy object, becomes subject to large electrical surges at the moment of startup.	7 10	Protection circuit voltage and current	6.5.4 Annex B	Double protection is needed for the PC itself or battery pack.
84	Battery pack, which was subjected to high pressure from a heavy object, becomes subject to high electric field produced by a radio transmitter or other equipment.	7 11	Protection circuit voltage and current	Immunity 6.5.4	Double protection is needed for the PC itself or battery pack.
85	Battery pack, which subjected to high pressure from a heavy object, becomes subject to low air pressure during air or other transport.	7 12	Protection circuit voltage and current	6.5.4 Annex B	Double protection is needed for the PC itself or battery pack.
86	Battery pack is cut into because it is judged as waste by mistake.		Classify to abuse	8.1.1.1	

Copyright © 2004 IEEE. All rights reserved.

Not for Resale

Copyright The Institute of Electrical and Electronics Engineers, Inc.
Provided by IHS under license with IEEE
No reproduction or networking permitted without license from IHS

Table D.1—Double fault simulation study *(continued)*

	Use situation	Factor	Supposed fault	Items to protect from hazards (see reference)	Proposed minimum requirements
87	Battery pack, which came into contact with electrostatically charged person and objects, becomes subject to large electrical surges at the moment of startup.	9 10	Charge voltage Charge current	6.5.4 7.1.2.1 7.1.2.2 Annex B	Double protection is needed for the PC itself or battery pack.
88	PC or battery pack, which came into contact with electrostatically charged person and objects, becomes subject to high electric field produced by a radio transmitter and other equipment.	9 11	Charge voltage Charge current	Immunity 6.5.4	Double protection is needed for the PC itself or battery pack.
89	Battery pack, which came to contact with electrostatically charged person and objects, becomes subject to low air pressure during air or other transport.	9 12	Charge voltage Charge current	6.5.4 Annex B	Double protection is needed for the PC itself or battery pack.
90	Battery pack, which received a large current surge at the moment of electric supply connection or startup, becomes subject to high electric field produced by a radio transmitter or other equipment.	10 11	Charge voltage Charge current	Immunity 6.5.4	Double protection is needed for the PC itself or battery pack.
91	Battery pack, which received a large current surge at the moment of electric supply connection or startup, becomes subject to low air pressure during air or other transport.	10 12	Charge voltage Charge current	6.5.4 Annex B	Double protection is needed for the PC itself or battery pack.
92	Battery pack, which was exposed to high electric field produced by a radio transmitter or other equipment, becomes subject to low air pressure during air or other transport.	11 12	Charge voltage Charge current6	6.5.4 Immunity Annex B	Double protection is needed for the PC itself or battery pack.
93	Battery pack is dried in a microwave oven.	Abuse	Classify to abuse	8.1.1.1 8.1.1.2	
94	Battery pack is thrown in fire.	Abuse	Classify to abuse	8.1.1.2	

Not for Resale

Copyright © 2004 IEEE. All rights reserved.

Table D.1—Double fault simulation study *(continued)*

	Use situation	Factor	Supposed fault	Items to protect from hazards (see reference)	Proposed minimum requirements
95	Battery pack is crushed in a crowded commuter train.	Abuse	Classify to abuse	8.1.1.2	
96	Pet urinates on the PC.	Abuse	Classify to abuse	8.1.1.2	

Copyright © 2004 IEEE. All rights reserved.
Copyright The Institute of Electrical and Electronics Engineers, Inc.
Provided by IHS under license with IEEE
No reproduction or networking permitted without license from IHS
Not for Resale

Annex E

(informative)

Temperature environmental considerations

This annex includes information from a study on temperature range at various locations in automobiles. This information is provided to assist the user of this standard when temperature is included in design analyses; this annex is intended to be a resource for the user. This annex includes: temperature rise on each position in the car in clear weather; maximum temperature at each position in the car for 8 h in desert conditions under clear weather; and maximum temperature at each position in the car in Melbourne, Australia, when the maximum temperature on the day the data was taken was 40 ºC.

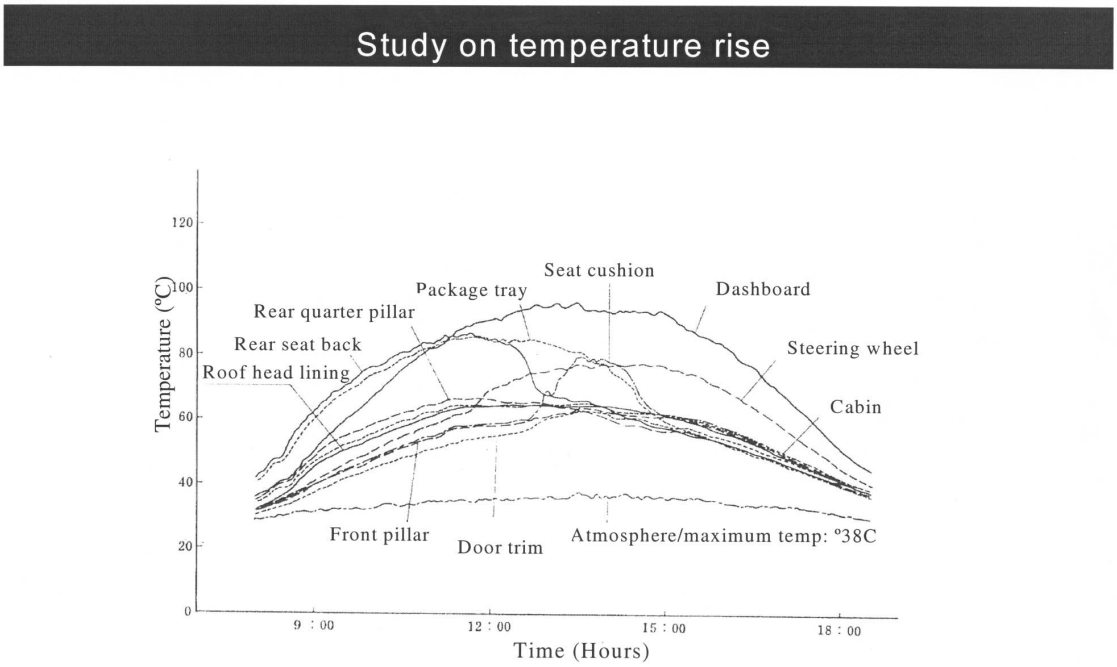

Figure E.1—Temperature rise on each position in the car under clear weather (measured by Ford)

Reprinted with permission from the Society of Automotive Engineers of Japan, Inc.

Copyright © 2004 IEEE. All rights reserved.

Copyright The Institute of Electrical and Electronics Engineers, Inc.
Provided by IHS under license with IEEE
No reproduction or networking permitted without license from IHS
Not for Resale

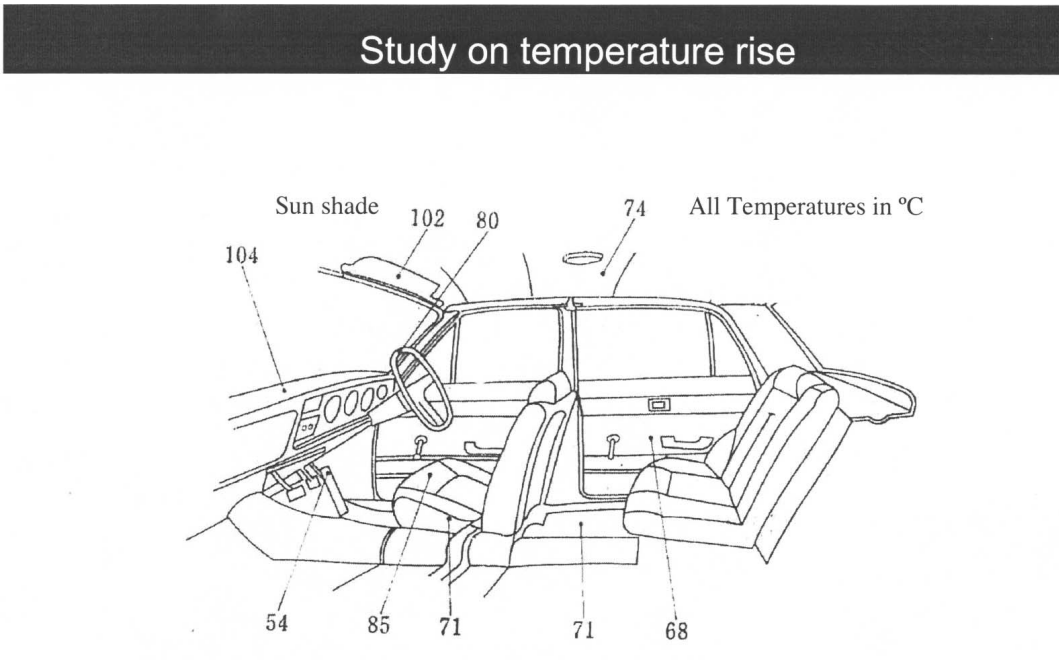

Figure E.2—Maximum temperature at each position in the car for 8 h in desert conditions under clear weather. Outside temperature was 52 °C (measured by Ford).

Reprinted with permission from the Society of Automotive Engineers of Japan, Inc.

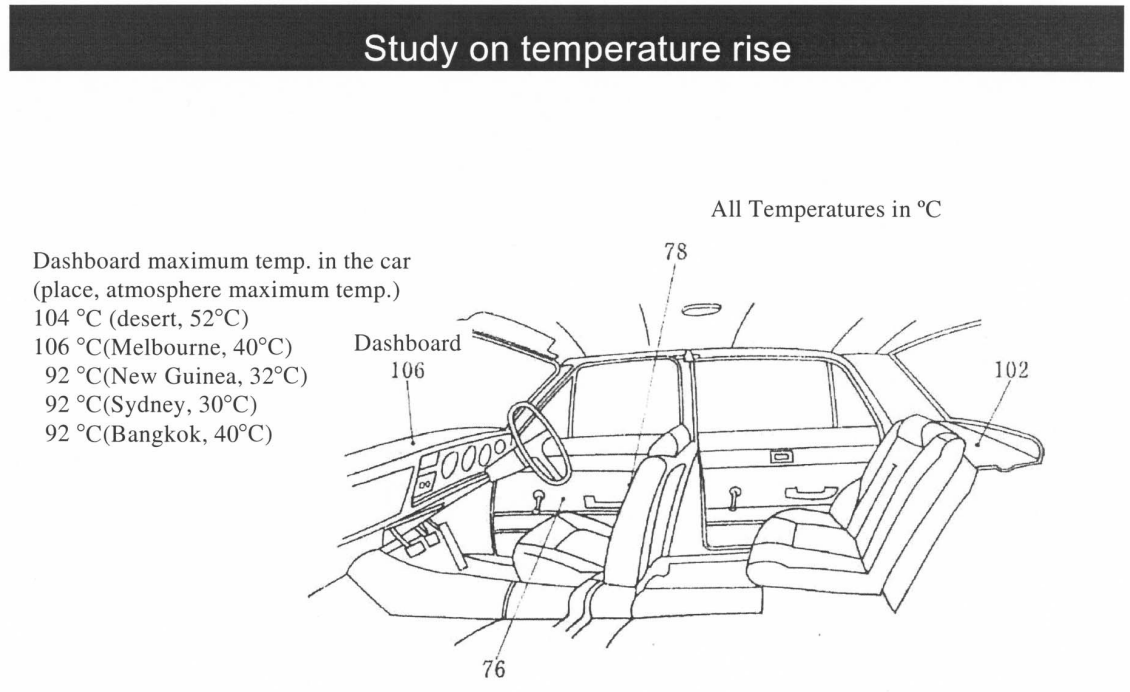

Figure E.3—Maximum temperature at each position in the car in Melbourne. Maximum outside temperature was 40 °C.

Reprinted with permission from the Society of Automotive Engineers of Japan, Inc.

Copyright © 2004 IEEE. All rights reserved.

Copyright The Institute of Electrical and Electronics Engineers, Inc.
Provided by IHS under license with IEEE
No reproduction or networking permitted without license from IHS
Not for Resale

Annex F

(informative)

Bibliography

[B1] *Guidelines for Failure Modes and Effects Analysis (FMEA) for Medical Devices,* Richmond Hill, Canada: Dyadem Press, 2003.

[B2] IEC 60051-1:1997, Direct Acting Analogue Electrical Measuring Instruments and Their Accessories—Part 1: Definitions and General Requirements Common to All Parts.[8]

[B3] IEC 60068-2-6:1995, Environmental Testing—Part 2: Tests—Test FC: Vibration (sinusoidal).

[B4] IEC 60068-2-27:1987, Environmental Testing Procedures—Part 2: Tests—Test EA and Guidance: Shock.

[B5] IEC 60068-2-32:1975, Environmental Testing—Part 2: Tests—Test ED: Free Fall.

[B6] IEC 60950-1:2001, Information Technology Equipment—Safety—Part 1: General Requirements.

[B7] IEEE 100, T*he Authoritative Dictionary of IEEE Standards Terms*, Seventh Edition.[9]

[B8] ISO/IEC Directive Part 2, *Rules for the Structure and Drafting of International Standards,* 2001.[10]

[B9] McDermott, R. E., Mikulak, R. J., and Beauregard, M. R., *The Basics of FMEA*, Productivity Inc., 1996.

[B10] *Merriam-Webster's Collegiate Dictionary,* 11th Edition, Springfield, MA: Merriam Webster, Inc., 2003.

[B11] SAE J1739-2002, Potential Failure Mode and Effects Analysis in Design (Design FMEA), Potential Failure Mode Effects Analysis in Manufacturing and Assembly Processes (Process FMEA), and Potential Failure Mode and Effects Analysis for Machinery (Machinery FMEA).[11]

[B12] Saganuma, A., Tamashima, N., and Awaya A., "On Temperature Rise in Passenger Compartment in Summer," *Journal of the Society of Automotive Engineers of Japan, Inc.*, Vol. 30 No. 8, pp. 652-655, 1976.

[8]IEC publications are available from the Sales Department of the International Electrotechnical Commission, Case Postale 131, 3, rue de Varembé, CH-1211, Genève 20, Switzerland/Suisse (http://www.iec.ch/). IEC publications are also available in the United States from the Sales Department, American National Standards Institute, 11 West 42nd Street, 13th Floor, New York, NY 10036, USA.

[9]IEEE publications are available from the Institute of Electrical and Electronics Engineers, 445 Hoes Lane, P.O. Box 1331, Piscataway, NJ 08855-1331, USA (http://standards.ieee.org/).

[10]ISO/IEC publications are available from the ISO Central Secretariat, Case Postale 56, 1 rue de Varembé, CH-1211, Genève 20, Switzerland/Suisse (http://www.iso.ch/). ISO/IEC publications are also available in the United States from Global Engineering Documents, 15 Inverness Way East, Englewood, CO 80112, USA (http://global.ihs.com/). Electronic copies are available in the United States from the American National Standards Institute, 25 West 43rd Street, 4th Floor, New York, NY 10036, USA (http://www.ansi.org/).

[11]SAE publications are available from the Society of Automotive Engineers, 400 Commonwealth Drive, Warrendale, PA 15096, USA (http://www.sae.org/).

Copyright © 2004 IEEE. All rights reserved.

Copyright The Institute of Electrical and Electronics Engineers, Inc.
Provided by IHS under license with IEEE
No reproduction or networking permitted without license from IHS Not for Resale

[B13] Stamatis, D.H., *Failure Mode and Effect Analysis: FMEA from Theory to Execution*, 2nd Edition, Milwaukee, WI: American Society for Quality, 2003.

[B14] Sutton, Ian S., *Process Hazards Analysis*, 2nd Edition, Houston, TX: Sutton Technical Books, 2003.

[B15] UL 60950-2000, Safety of Information Technology Equipment, Third Edition.[12]

[12]UL standards are available from Global Engineering Documents, 15 Inverness Way East, Englewood, CO 80112, USA (http://global.ihs.com/).

Copyright © 2004 IEEE. All rights reserved.

Copyright The Institute of Electrical and Electronics Engineers, Inc.
Provided by IHS under license with IEEE
No reproduction or networking permitted without license from IHS Not for Resale

Copyright © 2004 IEEE. All rights reserved.

Copyright The Institute of Electrical and Electronics Engineers, Inc.
Provided by IHS under license with IEEE
No reproduction or networking permitted without license from IHS
Not for Resale