IEEE Std 141-1993
(Revision of IEEE Std 141-1986)

IEEE Recommended Practice for Electric Power Distribution for Industrial Plants

Sponsor

**Power Systems Engineering Committee
of the
Industrial and Commercial Power Systems Department
of the
IEEE Industry Applications Society**

Approved December 2, 1993

IEEE Standards Board

Abstract: A thorough analysis of basic electrical-systems considerations is presented. Guidance is provided in design, construction, and continuity of an overall system to achieve safety of life and preservation of property; reliability; simplicity of operation; voltage regulation in the utilization of equipment within the tolerance limits under all load conditions; care and maintenance; and flexibility to permit development and expansion. Recommendations are made regarding system planning; voltage considerations; surge voltage protection; system protective devices; fault calculations; grounding; power switching, transformation, and motor-control apparatus; instruments and meters; cable systems; busways; electrical energy conservation; and cost estimation.
Keywords: energy management, grounding, industrial power system, industrial power system economics, industrial power system planning, industrial power system protection, power cables, power distribution, power transformers, power system measurements, switches/ switchgear, wiring

Copyright The Institute of Electrical and Electronics Engineers, Inc.
Provided by IHS under license with IEEE
No reproduction or networking permitted without license from IHS
Not for Resale

Grateful acknowledgment is made to the following organizations for having granted permission to reprint illustrations in this document as listed below:

Table 3-1 from ANSI C84.1-1989, American National Standard for Electric Power Systems and Equipment—Voltage Ratings (60 Hz), copyright 1989 by the American National Standards Institute.

Figure 3-7 from NEMA Standards Publication MG 1-1993, copyright held by the National Electrical Manufacturers Association.

Figure 5-4 from Basler Electric, Highland, IL.

Figure 5-5 from General Electric Company, Malvern, PA.

Figure 6-6 from the *Industrial Power Systems Data Book,* General Electric Company, Schenectady, NY.

Figure 6-11 from D. L. Beeman, Ed., *Industrial Power Systems Handbook,* McGraw-Hill, New York, NY, 1955.

The Institute of Electrical and Electronics Engineers, Inc.
345 East 47th Street, New York, NY 10017-2394, USA

Copyright © 1994 by the Institute of Electrical and Electronics Engineers, Inc.
All rights reserved. Published 1994. Printed in the United States of America.

ISBN 1-55937-333-4

No part of this publication may be reproduced in any form, in an electronic retrieval system or otherwise, without the prior written permission of the publisher.

Copyright The Institute of Electrical and Electronics Engineers, Inc.
Provided by IHS under license with IEEE
No reproduction or networking permitted without license from IHS
Not for Resale

IEEE Standards documents are developed within the Technical Committees of the IEEE Societies and the Standards Coordinating Committees of the IEEE Standards Board. Members of the committees serve voluntarily and without compensation. They are not necessarily members of the Institute. The standards developed within IEEE represent a consensus of the broad expertise on the subject within the Institute as well as those activities outside of IEEE that have expressed an interest in participating in the development of the standard.

Use of an IEEE Standard is wholly voluntary. The existence of an IEEE Standard does not imply that there are no other ways to produce, test, measure, purchase, market, or provide other goods and services related to the scope of the IEEE Standard. Furthermore, the viewpoint expressed at the time a standard is approved and issued is subject to change brought about through developments in the state of the art and comments received from users of the standard. Every IEEE Standard is subjected to review at least every five years for revision or reaffirmation. When a document is more than five years old and has not been reaffirmed, it is reasonable to conclude that its contents, although still of some value, do not wholly reflect the present state of the art. Users are cautioned to check to determine that they have the latest edition of any IEEE Standard.

Comments for revision of IEEE Standards are welcome from any interested party, regardless of membership affiliation with IEEE. Suggestions for changes in documents should be in the form of a proposed change of text, together with appropriate supporting comments.

Interpretations: Occasionally questions may arise regarding the meaning of portions of standards as they relate to specific applications. When the need for interpretations is brought to the attention of IEEE, the Institute will initiate action to prepare appropriate responses. Since IEEE Standards represent a consensus of all concerned interests, it is important to ensure that any interpretation has also received the concurrence of a balance of interests. For this reason IEEE and the members of its technical committees are not able to provide an instant response to interpretation requests except in those cases where the matter has previously received formal consideration.

Comments on standards and requests for interpretations should be addressed to:

Secretary, IEEE Standards Board
445 Hoes Lane
P.O. Box 1331
Piscataway, NJ 08855-1331
USA

IEEE Standards documents may involve the use of patented technology. Their approval by the Institute of Electrical and Electronics Engineers does not mean that using such technology for the purpose of conforming to such standards is authorized by the patent owner. It is the obligation of the user of such technology to obtain all necessary permissions.

Copyright The Institute of Electrical and Electronics Engineers, Inc.
Provided by IHS under license with IEEE
No reproduction or networking permitted without license from IHS
Not for Resale

This page intentionally left blank

Copyright The Institute of Electrical and Electronics Engineers, Inc.
Provided by IHS under license with IEEE
No reproduction or networking permitted without license from IHS
Not for Resale

Introduction

(This introduction is not part of IEEE Std 141-1993, IEEE Recommended Practice for Electric Power Distribution for Industrial Plants.)

Development of the IEEE Red Book has been an evolving process. With the publication of IEEE Std 141-1993, the Red Book has been in print for about fifty years. Work began on the seventh edition in 1987 with the participation of more than seventy electrical engineers from industrial plants, consulting firms, equipment manufacturers, and academe. It was sponsored and the final version approved by the Power Systems Design Subcommittee of the Power Systems Engineering Committee, Industrial and Commercial Power Systems Department, IEEE Industry Applications Society. The seventh edition was approved by the IEEE Standards Board in 1993 as an IEEE Recommended Practice. It provides pertinent information and recommended practices for the design, construction, operation, and maintenance of electric power systems in industrial plants.

The first publication was developed in 1945 by the Committee on Industrial Power Applications of the American Institute of Electrical Engineers (AIEE). It was entitled *Electric Power Distribution for Industrial Plants* and sold for $1.00 a copy. It became known by the nickname “Red Book” because of its red cover, and a precedent was established for the present IEEE Color Book series, which now encompasses ten books.

The second edition was published in 1956. The committee responsible for its preparation had become a subcommittee of the Industrial Power Systems Committee of the AIEE. This edition was identified as AIEE Number 952.

By 1964, the AIEE had become the Institute of Electrical and Electronics Engineers and the third edition was identified as IEEE No. 141. The fourth edition was produced in 1969, approved as an IEEE Recommended Practice, and identified as IEEE Std 141-1969. The fifth edition, published in 1976, was IEEE Std 141-1976, and the sixth edition, published in 1986, became an American National Standard as well as an IEEE Recommended Practice, and was identified as ANSI/IEEE Std 141-1986.

The authors of this 1993 edition wish to acknowledge their indebtedness to the several hundred engineers whose expertise and work culminated in the six previous editions. The present stature of the Red Book would not have been achieved without their efforts.

Copyright The Institute of Electrical and Electronics Engineers, Inc.
Provided by IHS under license with IEEE
No reproduction or networking permitted without license from IHS
Not for Resale

The Red Book Working Group for the 1993 edition had the following membership:

William J. Moylan, *Chair* — **Lynn Saunders**, *Secretary*
R. Gerald Irvine, *Technical Support* — **Lucas G. Ananian**, *Advisory Counsel*

Chapter 1: Overview—**Dan Goldberg,** *Chair;* Arthur Freund; R. Gerald Irvine; C. Grant Keough; Philip Nobile; Don Zipse

Chapter 2: Systems planning—**Lynn Saunders,** *Chair;* Robert Beaker; Carl Becker; B. L. Christen; Tom Diliberti; William Moylan; Don Pomering; Ronald Smith; Ray Stratford; S. I. Venugopalan; Don Zipse

Chapter 3: Voltage considerations—**Larry Conrad,** *Co-Chair;* **Gary Smullin,** *Co-Chair;* Carl Becker; Don Brereton; R. Gerald Irvine; S. I. Venugopalan

Chapter 4: Fault calculations—**Walter C. Huening,** *Chair;* Carl Becker; Richard Evans; Shan Griffith; Mark Leyton; Conrad St. Pierre

Chapter 5: Application and coordination of protective devices—**David Baker,** *Chair;* Jerry Baskin; Steve Goble; R. Gerald Irvine; William Moylan; Randall Schlake

Chapter 6: Surge voltage protection—**Wei-Jen Lee,** *Chair;* David Baker; Carl Becker; Gilbert Gaibrois; Shan Griffith; William Moylan; George Walsh

Chapter 7: Grounding—**Donald W. Zipse,** *Chair;* Robert Beaker; Kenneth Nicholson; Jerry Brown; Daleep Mohla; Charles Dennis; Milton Robinson; S. I. Venugopalan

Chapter 8: Power factor and related considerations—**William Moylan,** *Chair;* Carl Becker; James Harvey; Warren Lewis; Ray Stratford; George Walsh

Chapter 9: Harmonics in power systems—**Ray Stratford,** *Chair;* Larry Conrad; Dennis Darling; William Moylan

Chapter 10: Power switching, transformation, and motor control apparatus—**Sonny Sengupta,** *Chair;* Jerry Frank; Douglas Kanitz; R. Gerald Irvine; Harold Miles; William Moylan

Chapter 11: Instruments and meters—**Larry Conrad,** *Chair;* Valdis Basch; Harry Beckman; Dennis Darling; James Harvey; Yoshi Held

Chapter 12: Cable systems—**James Daly,** *Chair;* Robert Beaker; Gordon Bracey; Larry Kelly; Lynn Saunders

Chapter 13: Busways—**John Schuster,** *Chair;* Louis Capitina; Steven Flee; Robert Gustin; Robert Ingham; James Lewis; William Moylan; Lynn Saunders

Chapter 14: Electrical conservation through energy management—**Carl Becker,** *Chair;* Kao Chen; Joseph Eto; Dan Goldberg; R. Gerald Irvine; C. Grant Keough

Chapter 15: Industrial substations: Plant-utility interface considerations—**Tom Diliberti,** *Co-Chair;* **Ron Smith,** *Co-Chair;* Jerry Baskin; Carl Becker; C. W. Bierl; Larry Conrad; Joseph Dudor; Paul Gulik; Robert Hoerauf; Daleep Mohla; William Moylan; Lynn Saunders; Michael Stark; Don Zipse

Chapter 16: Cost estimating of industrial power systems—**Sonny Sengupta,** *Co-Chair;* **Charles Dennis,** *Co-Chair;* Robert Giese, Erling Hesla; Srimohan Jha; William Moylan; Malcolm Woodman; Don Zipse

Copyright The Institute of Electrical and Electronics Engineers, Inc.
Provided by IHS under license with IEEE
No reproduction or networking permitted without license from IHS
Not for Resale

At the time this document was balloted, the Power Systems Design Subcommittee had the following membership:

Stephen J. Schaffer, *Chair*

L. G. Ananian
R. J. Beaker
J. H. Beall
C. E. Becker
R. W. Becker
G. R. J. Bracey
D. S. Brereton
R. Castenschiold
L. E. Conrad
J. M. Daly
J. Eto
R. A. Evans
L. F. Flagg
J. M. Frank
E. O. Galyon
S. Goble
D. L. Goldberg
A. P. Haggerty
J. R. Harvey
R. G. Hoerauf
L. F. Hogrebe
R. W. Ingham
R. G. Irvine
D. R. Kanitz
S. C. Kapoor
C. G. Keough
T. S. Key
C. A. LaPlatney
S. A. Larson
M. Z. Lowenstein
H. C. Miles
D. C. Mohla
W. J. Moylan
J. R. Pfafflin
C. R. Pope
M. D. Robinson
V. Saporita
L. F. Saunders
L. H. Smith, Jr.
G. T. Smullin
T. E. Sparling
S. I. Venugopalan
W. N. Vernon
P. A. Zink
D. W. Zipse

Others who contributed to the development of this document are as follows:
Bruce Bailey, Richard Doughty, William Kelly, Richard McFadden, Robert Simpson

Special recognition is given to Jeannette Pierce and Barbara Abitz for their contributions to the Red Book through coordination of balloting, document preparation, and liaison with chapter chairs.

The following persons were on the balloting committee:

Lucas Ananian
Robert J. Beaker
James H. Beall
Carl E. Becker
Rene Castenschiold
James M. Daly
Richard Evans
Jerry M. Frank
Edgar O. Galyon
Steven Goble
Daniel L. Goldberg
Patrick A. Haggerty
James R. Harvey
Robert G. Hoerauf
Robert W. Ingham
R. Gerald Irvine
Ed Kalkstein
Douglas R. Kanitz
S. C. Kapoor
C. Grant Keough
Thomas S. Key
Steven A. Larson
Wei-Jen Lee
Michael Lowenstein
Daleep C. Mohla
William J. Moylan
Milton D. Robinson
Vincent Saporita
Lynn F. Saunders
Stephen J. Schaffer
Lester H. Smith
Thomas E. Sparling
S. I. Venugopalan
Philip A. Zinck
Donald W. Zipse

Copyright The Institute of Electrical and Electronics Engineers, Inc.
Provided by IHS under license with IEEE
No reproduction or networking permitted without license from IHS
Not for Resale

When the IEEE Standards Board approved this standard on December 2, 1993, it had the following membership:

Wallace S. Read, *Chair* **Donald C. Loughry,** *Vice Chair*
Andrew G. Salem, *Secretary*

Gilles A. Baril	Jim Isaak	Don T. Michael*
José A. Berrios de la Paz	Ben C. Johnson	Marco W. Migliaro
Clyde R. Camp	Walter J. Karplus	L. John Rankine
Donald C. Fleckenstein	Lorraine C. Kevra	Arthur K. Reilly
Jay Forster*	E. G. "Al" Kiener	Ronald H. Reimer
David F. Franklin	Ivor N. Knight	Gary S. Robinson
Ramiro Garcia	Joseph L. Koepfinger*	Leonard L. Tripp
Donald N. Heirman	D. N. "Jim" Logothetis	Donald W. Zipse

*Member Emeritus

Also included are the following nonvoting IEEE Standards Board liaisons:

Satish K. Aggarwal
James Beall
Richard B. Engelman
David E. Soffrin
Stanley I. Warshaw

Paula M. Kelty
IEEE Standards Project Editor

--`,,`,,`-`-`,,`,,`,`,,`---

Copyright The Institute of Electrical and Electronics Engineers, Inc.
Provided by IHS under license with IEEE
No reproduction or networking permitted without license from IHS Not for Resale

Acknowledgments

We gratefully acknowledge the contributions of time, talent, and expertise the following organizations have made toward the development of this Recommended Practice:

AT&T
BICC Cables Corporation
Brown & Root, Inc. and Associated Companies
Brown & Root, Braun
Carlsons Consulting Engineers, Inc.
Clarence P. Tsung & Associates
Cleveland Electric Illuminating Company
Cooper Industries, Bussmann Division
Detroit Edison
DuPont Company
Electrical Systems Analysis (ESA)
FMC Corporation
General Electric Company
Giese & Associates
Hoechst Celanese Corporation
ICF Kaiser Engineers, Inc.
Industra Inc., Engineers & Consultants
International Transformer Corporation
John Brown E & C
Middle Tennessee State University (MTSU)
Moylan Engineering Associates, Inc.
Oak Ridge National Laboratory, MMES
Power Technology Consultants, P.A.
Power Technologies, Inc.
Square D Company
Union Carbide
The University of Texas at Arlington
Westinghouse Electric Corporation
Wunderlich-Malec Engineering, Inc.

Copyright The Institute of Electrical and Electronics Engineers, Inc.
Provided by IHS under license with IEEE
No reproduction or networking permitted without license from IHS
Not for Resale

This page intentionally left blank

Copyright The Institute of Electrical and Electronics Engineers, Inc.
Provided by IHS under license with IEEE
No reproduction or networking permitted without license from IHS

Not for Resale

Contents

CLAUSE PAGE

Chapter 1
Overview 1

1.1 Scope and general information 1
1.2 Industrial plants 1
1.3 Industry Applications Society (IAS) 5
1.4 Professional registration 6
1.5 Professional liability 7
1.6 Codes and standards 7
1.7 Handbooks 10
1.8 Periodicals 11
1.9 Manufacturers' Data 12
1.10 Safety 12
1.11 Maintenance 15
1.12 Design considerations 15
1.13 Estimating 19
1.14 Contracts 20
1.15 Access and loading 21
1.16 Contractor performance 21
1.17 Environmental considerations 22
1.18 Technical files 22
1.19 Electronic systems 22
1.20 Programmable logic controller 24
1.21 Bibliography 24

Chapter 2
System planning 27

2.1 Introduction 27
2.2 Definitions 27
2.3 Basic design considerations 27
2.4 Planning guide for the supply and distribution system 31
2.5 Power system modernization and evaluation studies/programs 56
2.6 References 58
2.7 Bibliography 59

Chapter 3
Voltage considerations 61

3.1 General 61
3.2 Voltage control in electric power systems 66
3.3 Voltage selection 78
3.4 Voltage ratings for low-voltage utilization equipment 81

Copyright The Institute of Electrical and Electronics Engineers, Inc.
Provided by IHS under license with IEEE
No reproduction or networking permitted without license from IHS Not for Resale

CLAUSE PAGE

3.5 Effect of voltage variations on low-voltage and medium-voltage utilization equipment ... 82
3.6 Voltage drop considerations in locating the low-voltage secondary distribution system power source ... 86
3.7 Improvement of voltage conditions ... 87
3.8 Phase-voltage unbalance in three-phase systems ... 89
3.9 Voltage sags and flicker ... 91
3.10 Harmonics ... 95
3.11 Calculation of voltage drops ... 96
3.12 References ... 107
3.13 Bibliography ... 108

Chapter 4
Short-circuit current calculations ... 109

4.1 Introduction ... 109
4.2 Sources of fault current ... 109
4.3 Fundamentals of short-circuit current calculations ... 112
4.4 Restraints of simplified calculations ... 115
4.5 Detailed procedure ... 124
4.6 Example of short-circuit current calculation for a power system with several voltage levels ... 138
4.7 Example of short-circuit current calculation for a low-voltage system (under 1000 V) ... 158
4.8 Calculation of short-circuit currents for dc systems ... 170
4.9 References ... 170
4.10 Bibliography ... 171

Annex 4A
Typical impedance data for short-circuit studies ... 173

Chapter 5
Application and coordination of protective devices ... 185

5.1 Purpose ... 185
5.2 Analysis of system behavior and protection needs ... 187
5.3 Protective devices and their applications ... 192
5.4 Performance limitations ... 222
5.5 Principles of protective relay application [38], [40], [50] ... 223
5.6 Protection requirements ... 238
5.7 Use and interpretation of time-current coordination curves ... 250
5.8 Specific examples—applying the fundamentals ... 260
5.9 Acceptance testing (commissioning), maintenance, and field testing ... 281
5.10 Bibliography ... 304

Copyright The Institute of Electrical and Electronics Engineers, Inc.
Provided by IHS under license with IEEE
No reproduction or networking permitted without license from IHS
Not for Resale

CLAUSE PAGE

Chapter 6
Surge voltage protection 311

6.1 Nature of the problem 311
6.2 Traveling-wave behavior 315
6.3 Insulation voltage withstand characteristics 322
6.4 Arrester characteristics and ratings 330
6.5 Arrester selection 336
6.6 Selection of arrester class 338
6.7 Application concepts 340
6.8 References 355
6.9 Bibliography 357

Chapter 7
Grounding 363

7.1 Introduction 363
7.2 System grounding 363
7.3 Equipment grounding 370
7.4 Static and lightning protection grounding 375
7.5 Connection to earth 379
7.6 Ground resistance measurement 383
7.7 References 389
7.8 Bibliography 389

Chapter 8
Power factor and related considerations 393

8.1 General scope 393
8.2 Current and power flow fundamentals 394
8.3 Benefits of power-factor improvement 397
8.4 Typical plant power factor 402
8.5 Instruments and measurements for power-factor studies 404
8.6 Techniques to improve the power factor 405
8.7 Calculation methods for improving power factor 410
8.8 Location of reactive power supply 411
8.9 Capacitors with induction motors 412
8.10 Capacitor standards and operating characteristics 422
8.11 Controls for switched capacitors 425
8.12 Transients and capacitor switching 427
8.13 Protection of capacitors and capacitor banks 435
8.14 Resonance and harmonics 437
8.15 Inspection and field testing of power capacitors 438
8.16 References 440
8.17 Bibliography 442

Copyright The Institute of Electrical and Electronics Engineers, Inc.
Provided by IHS under license with IEEE
No reproduction or networking permitted without license from IHS Not for Resale

CLAUSE PAGE

Chapter 9
Harmonics in power systems 443

9.1 Introduction 443
9.2 Importance of understanding effects of harmonics 443
9.3 History of harmonic problems and solutions 444
9.4 Definition and sources of harmonic currents and voltages 445
9.5 Characteristics of harmonics 447
9.6 Static power converter theory 449
9.7 System response characteristics 455
9.8 Effects of harmonics 458
9.9 Harmonic analysis 466
9.10 Mitigation techniques 467
9.11 Industry standards 471
9.12 Bibliography 473

Chapter 10
Power switching, transformation, and motor control apparatus 475

10.1 Introduction 475
10.2 Switching apparatus for power circuits 478
10.3 Switchgear 492
10.4 Transformers 503
10.5 Unit substations 519
10.6 Motor control equipment 521
10.7 Adjustable speed drives 529
10.8 Bibliography 532

Chapter 11
Instruments and meters 537

11.1 Introduction 537
11.2 Basic objectives 540
11.3 Switchboard and panel instruments 540
11.4 Portable instruments 542
11.5 Recording instruments 543
11.6 Miscellaneous instruments 544
11.7 Meters 545
11.8 Auxiliary devices 549
11.9 Typical installations 551
11.10 Bibliography 552

Chapter 12
Cable systems 553

12.1 Introduction 553

Copyright The Institute of Electrical and Electronics Engineers, Inc.
Provided by IHS under license with IEEE
No reproduction or networking permitted without license from IHS
Not for Resale

CLAUSE PAGE

12.2 Cable construction 554
12.3 Cable outer finishes 566
12.4 Cable ratings 570
12.5 Installation 579
12.6 Connectors 586
12.7 Terminations 592
12.8 Splicing devices and techniques 601
12.9 Grounding of cable systems 605
12.10 Protection from transient overvoltage 606
12.11 Testing 607
12.12 Locating cable faults 613
12.13 Cable specification 617
12.14 References 617
12.15 Bibliography 619

Chapter 13
Busways 621

13.1 Origin 621
13.2 Busway construction 621
13.3 Feeder busway 623
13.4 Plug-in busway 624
13.5 Lighting busway 626
13.6 Trolley busway 627
13.7 Standards 627
13.8 Selection and application of busways 628
13.9 Layout 634
13.10 Installation 635
13.11 Field testing 637
13.12 Busways over 600 V (metal-enclosed bus) 637
13.13 References 639

Chapter 14
Electrical conservation through energy management 641

14.1 Introduction 641
14.2 Finding energy conservation opportunities 642
14.3 The energy management process 643
14.4 Calculating energy savings 646
14.5 Load management 653
14.6 Efficiencies of electrical equipment 655
14.7 Metering 658
14.8 Lighting 660
14.9 Cogeneration 669
14.10 Peak shaving 670
14.11 Summary 670
14.12 Bibliography 672

Copyright The Institute of Electrical and Electronics Engineers, Inc.
Provided by IHS under license with IEEE
No reproduction or networking permitted without license from IHS
Not for Resale

CLAUSE PAGE

Chapter 15
Industrial substations: plant-utility interface considerations 675

15.1 Introduction 675
15.2 Planning stage 678
15.3 Design stage 689
15.4 Construction stage 697
15.5 Operating stage 699
15.6 Bibliography 700

Chapter 16
Cost estimating of industrial power systems 703

16.1 Introduction 703
16.2 Information required 703
16.3 Factors to be considered 704
16.4 Preparing the cost estimate 704
16.5 Classes of estimates 704
16.6 Equipment and material costs 705
16.7 installation costs 705
16.8 Other costs 706
16.9 Example 706
16.10 Bibliography 707

Annex 16A
Selected sources for cost-estimating information 719

Annex A
Power system device function numbers 721

INDEX 729

Copyright The Institute of Electrical and Electronics Engineers, Inc.
Provided by IHS under license with IEEE
No reproduction or networking permitted without license from IHS
Not for Resale

IEEE Recommended Practice for Electric Power Distribution for Industrial Plants

Chapter 1
Overview

1.1 Scope and general information

This publication provides a recommended practice for the electrical design of industrial facilities. It is likely to be of greatest value to the power-oriented engineer with limited industrial plant experience. It can also be an aid to all engineers responsible for the electrical design of industrial facilities. However, it is not intended as a replacement for the many excellent engineering texts and handbooks commonly in use, nor is it detailed enough to be a design manual. It should be considered a guide and general reference on electrical design for industrial plants and buildings.

Tables, charts, and other information that have been extracted from codes, standards, and other technical literature are included in this publication. Their inclusion is for illustrative purposes; where technical accuracy is important, the latest version of the referenced document should be consulted to assure use of complete, up-to-date, and accurate information.

It is important to establish, at the outset, the terms describing voltage classifications. Table 1-1, adapted from IEEE Std 100-1992 [B5],[1] indicates these voltage levels. The National Electrical Code, described in 1.5.1, uses the term *over 600 volts* generally to refer to what is known as *high voltage*. Many IEEE Power Engineering Society (PES) standards use the term *high voltage* to refer to any voltage higher than 1000. All nominal voltages are expressed in terms of root-mean-square (rms). For a detailed explanation of voltage terms, see Chapter 3. ANSI C84.1-1977 [B1] lists voltage class designations applicable to industrial and commercial buildings where medium voltage extends from 1000 V to 69 kV nominal.

1.2 Industrial plants

The term *industrial plants,* as used in this chapter, refers to industrial plants, buildings, and complexes where manufacturing, industrial production, research, and development are performed. It does not include commercial buildings, such as institutional, governmental, public, health-related office buildings, nor apartment and residential buildings.

If commercial buildings are included in industrial complexes, then the use of IEEE Std 241-1990 (the Gray Book) would be appropriate for these specific buildings. If medical facilities

[1]The numbers in brackets preceded by the letter B correspond to those of the bibliography in 1.21.

--`,,`,,`-`-`,,`,,`,`,,`---
Copyright The Institute of Electrical and Electronics Engineers, Inc.
Provided by IHS under license with IEEE
No reproduction or networking permitted without license from IHS
Not for Resale

Table 1-1—Voltage classes

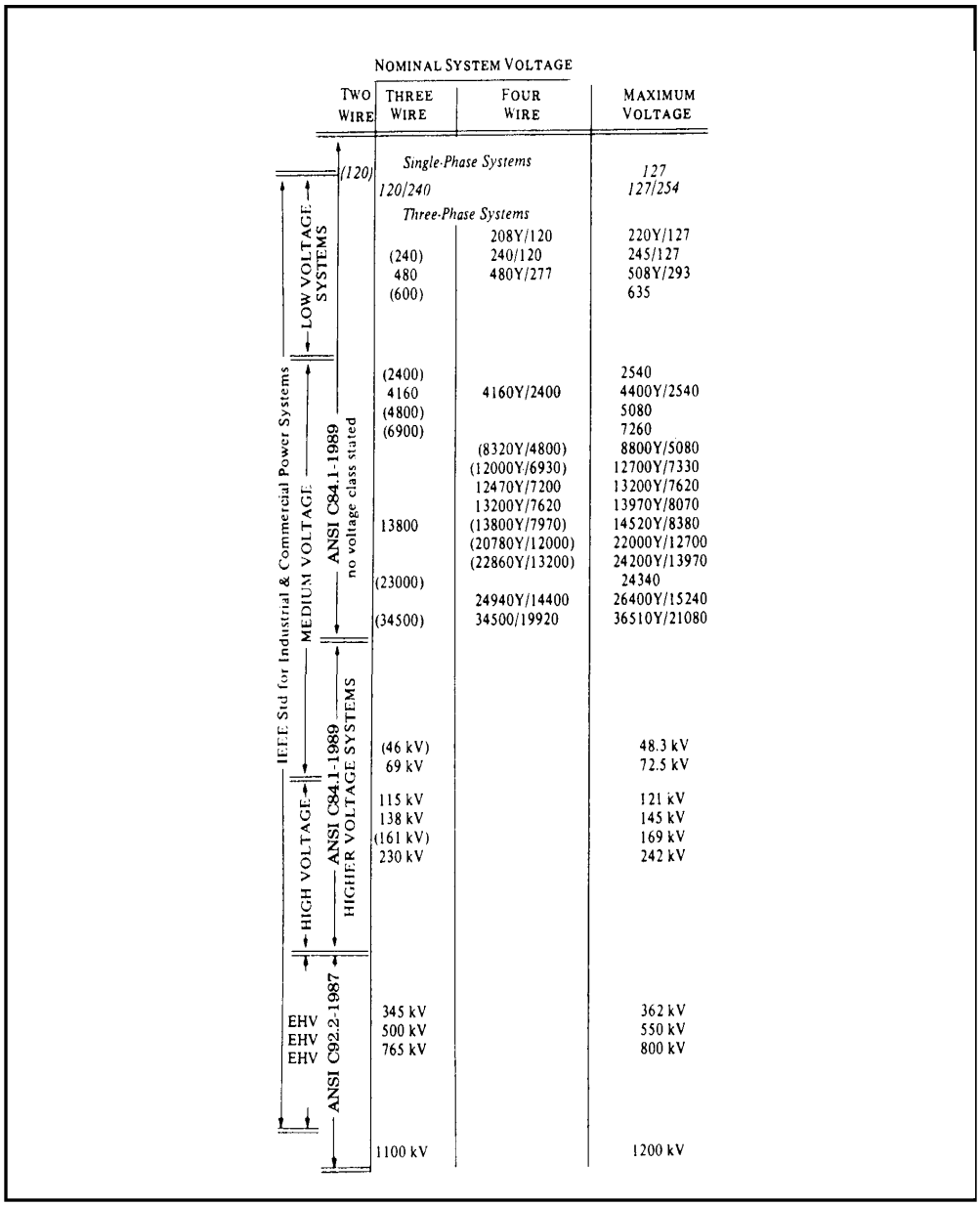

are included, IEEE Std 602-1986 (the White Book), should be consulted. (See 1.3.2 for a complete listing of the IEEE Color Books.)

The specific use of the facility or area in question, rather than the overall nature of the facility, determines its electrical design category. While industrial plants are primarily machine- and

Copyright The Institute of Electrical and Electronics Engineers, Inc.
Provided by IHS under license with IEEE
No reproduction or networking permitted without license from IHS
Not for Resale

production-oriented; commercial, residential, and institutional buildings are primarily people- and public-oriented. The fundamental objective of industrial plant design is to provide a safe, energy-efficient, and attractive environment for the manufacturing, research, development, and handling of industrial products. The electrical design must satisfy these criteria if it is to be successful.

Today's industrial plants, because of their increasing size, more complex processes, and newer technologies, have become more and more dependent upon adequate and reliable electrical systems. The complex nature of modern industrial plants can be better understood by examining the systems, equipment, and facilities listed in 1.2.1.

1.2.1 System requirements for industrial plants

The systems and equipment that must be provided in order to satisfy functional requirements will vary with the type of facility, but will generally include some, or all, of the following:

- Building electric service;
- Power distribution systems for manufacturing and process equipment. Plant distribution system for "house loads";
- Power outlet systems for movable equipment: receptacles, trolley systems, plug-in and trolley-busways, festoon-cable systems, and heavy portable cord systems;
- Process control systems, including computer-based equipment such as programmable controllers, robotic equipment, and special-purpose controllers of the relay or solid-state types. On-line, real-time computer systems;
- Materials handling systems: cranes, hoists, distribution systems, automated systems that identify and distribute products (as well as update production data bases);
- Lighting: interior and exterior, security and decorative, task and general lighting;
- Communications: telephone, facsimile, telegraph, satellite link, building-to-building communications (including microwave), computer link, radio, closed-circuit television, code call, public-address paging, fiber-optic and electronic intercommunication, pneumatic tube, medical alert, emergency and medical call, and a variety of other signal systems;
- Fire alarm systems: fire pumps and sprinklers, smoke and fire detection, alarm systems, and emergency public-address systems. Emergency alarm systems relating to dangerous process control failure conditions;
- Transportation: passenger and freight elevators, moving stairways, and dumbwaiters;
- Space-conditioning: heating, ventilation, and air-conditioning. Ambient temperature and dew-point controls relating to the specific manufacturing processes;
- Sanitation: garbage and rubbish storage, recycling, compaction and removal, document disposal equipment, incinerators, and sewage handling. Handling and storage of environmentally hazardous and sensitive waste materials;
- Environmental containment of materials classified as hazardous to the environment, including maintenance of containment systems (e.g., pressure, temperature);
- Plumbing: hot and cold water systems and water-treatment facilities;
- Security watchmen, burglar alarms, electronic access systems, and closed-circuit surveillance television;

Copyright The Institute of Electrical and Electronics Engineers, Inc.
Provided by IHS under license with IEEE
No reproduction or networking permitted without license from IHS
Not for Resale

— Business machines: typewriters, computers, calculating machines, reproduction machines, and word processors;
— Refrigeration equipment;
— Compressed air, vacuum systems, process gas storage and handling systems;
— "Clean or secure areas" for isolation against contaminants and/or electromagnetic and radio-frequency interference (EMI/RFI);
— Food handling, dining and cafeteria, and food preparation facilities;
— Maintenance facilities;
— Lightning protection;
— Automated facility control systems;
— Showrooms, training areas;
— Medical facilities;
— Employee rest and recreational areas;
— In-plant generation, cogeneration, and total energy provisions. Legally required and optional standby/emergency power and peak-shaving systems;
— Signing, signaling, and traffic control systems. Parking control systems, including automated parking systems.

1.2.2 Electrical design elements

In spite of the wide variety of industrial buildings, some electrical design elements are common to all. These elements, listed below, will be discussed generally in this chapter and in detail in the remaining chapters of this Recommended Practice. The principal design elements considered in the design of the power, lighting, and auxiliary systems include the following:

— Magnitudes, quality, characteristics, demand, and coincidence or diversity of loads and load factors;
— Service, distribution, and utilization voltages and voltage regulation;
— Flexibility and provisions for expansion;
— Reliability, continuity;
— Safety of personnel and property;
— Initial and maintained cost ("own-and-operate" costs);
— Operation and maintenance;
— Fault current and system coordination;
— Power sources;
— Distribution systems;
— Legally required and optional standby/emergency power systems;
— Energy conservation, demand, and control;
— Conformity with regulatory requirements;
— Special requirements associated with industrial processes;
— Special requirements of the site related to seismic requirements [B5], altitude, sound levels, security, exposure to physical elements, fire hazards [B6], and hazardous locations. Power conditioning and uninterruptible power supplies (UPS) systems.

Copyright The Institute of Electrical and Electronics Engineers, Inc.
Provided by IHS under license with IEEE
No reproduction or networking permitted without license from IHS Not for Resale

1.3 Industry Applications Society (IAS)

The IEEE is divided into 37 societies and technical councils that specialize in various technical areas of electrical and electronics engineering. Each group or society conducts meetings and publishes papers on developments within its specialized area.

The IAS currently encompasses 20 technical committees that cover the specific aspects of electrical engineering listed in 1.3.1, below. Papers of interest to electrical engineers and designers involved in the fields covered by the IEEE Red Book are, for the most part, contained in the *Transactions of the IAS*.

1.3.1 Committees within the IAS

The IAS is concerned with the power and control aspects of industrial plant and commercial buildings. To that end, in addition to the more general Power Systems Engineering and Power Systems Protection Committees within the Industrial and Commercial Power Systems Department, the following committees are involved with specific types of industries:

— Appliance Industry
— Cement Industry
— Electric Machines
— Electrostatic Processes
— Glass Industry
— Industrial Drives
— Industrial Automation and Control
— Industrial Power Converter
— Marine Transportation
— Metal Industry
— Mining Industry
— Petroleum and Chemical Industry
— Power Electronics Devices and Components
— Pulp and Paper Industry
— Rubber and Plastics Industry
— Rural Electric Power
— Textile, Fiber, and Film Industry

The Production and Application of Light (PALC), Power Systems Engineering, Power Systems Protection, Codes and Standards, Energy Systems, and Mining Safety Standards Committees of the IAS are involved with industrial power activities, and some publish material applicable to many types of industrial facilities.

All of the committees mentioned develop standards and articles for conference records and for the IAS Transactions. These publications deal with specialized electrical aspects of manufacturing and with electrical power and control systems for specific industries in greater detail than is possible in the Red Book.

Copyright The Institute of Electrical and Electronics Engineers, Inc.
Provided by IHS under license with IEEE
No reproduction or networking permitted without license from IHS
Not for Resale

1.3.2 The IEEE Color Books

The IEEE Red Book is one of a series of standards that are published by IEEE and are known as the IEEE Color Books. These standards are prepared by the Industrial and Commercial Power Systems Department of the IEEE Industry Applications Society. They are as follows:

— IEEE Std 141-1993, IEEE Recommended Practice for Electric Power Distribution for Industrial Plants (IEEE Red Book).
— IEEE Std 142-1991, IEEE Recommended Practice for Grounding of Industrial and Commercial Power Systems (IEEE Green Book).
— IEEE Std 241-1990, IEEE Recommended Practice for Power Systems in Commercial Buildings (IEEE Gray Book).
— IEEE Std 242-1986, IEEE Recommended Practice for Protection and Coordination of Industrial and Commercial Power Systems (IEEE Buff Book).
— IEEE Std 399-1990, IEEE Recommended Practice for Industrial and Commercial Power System Analysis (IEEE Brown Book).
— IEEE Std 446-1987, IEEE Recommended Practice for Emergency and Standby Power Systems for Industrial and Commercial Applications (IEEE Orange Book).
— IEEE Std 493-1990, IEEE Recommended Practice for the Design of Reliable Industrial and Commercial Power Systems (IEEE Gold Book).
— IEEE Std 602-1986, IEEE Recommended Practice for Electric Systems in Health Care Facilities (IEEE White Book).
— IEEE Std 739-1984, IEEE Recommended Practice for Energy Conservation and Cost-Effective Planning in Industrial Facilities (IEEE Bronze Book).
— IEEE Std 1100-1992, IEEE Recommended Practice for Powering and Grounding Sensitive Electronic Equipment (IEEE Emerald Book).

1.4 Professional registration

Most regulatory agencies require that design for public and other buildings be prepared under the jurisdiction of state-licensed professional architects or engineers. Information on such registration may be obtained from the appropriate state agency or from the local chapter of the National Society of Professional Engineers.

To facilitate obtaining registration in different states under the reciprocity rule, a National Professional Certificate is issued by the Records Department of the National Council of Engineering Examiners[2] to engineers who obtained their home-state license by examination. All engineering graduates are encouraged to start on the path to full registration by taking the engineer-in-training examination as soon after graduation as possible. The final written examination in the field of specialization is usually conducted after four years of progressive professional experience.

[2]P.O. Box 1686, Clemson, SC 29633-1686.

--`,,`,,`-`-`,,`,,`,`,,`---
Copyright The Institute of Electrical and Electronics Engineers, Inc.
Provided by IHS under license with IEEE
No reproduction or networking permitted without license from IHS Not for Resale

1.5 Professional liability

Recent court and regulatory decisions have held the engineer and designer liable for situations that have been interpreted as malpractice. These decisions have involved safety, environmental concerns, specification and purchasing practice, and related items. Claims for accidents, purportedly resulting from poor design or operating practice (e.g., too low lighting levels), have resulted in awards against engineering firms and design staff. Practicing engineers are encouraged to determine policies for handling such claims and to evaluate the need for separate professional liability insurance.

1.6 Codes and standards

1.6.1 National Electrical Code

The electrical wiring requirements of the National Electrical Code (NEC) (ANSI/NFPA 70-1993 [B1]), are vitally important guidelines for electrical engineers. The NEC is revised every three years. It is published by and available from the National Fire Protection Association (NFPA).[3] It is also available from the American National Standards Institute (ANSI)[4] and from each State's Board of Fire Underwriters (usually located in the State Capital). It does not represent a design specification but does identify minimum requirements for the safe installation and utilization of electricity. It is strongly recommended that the introduction to the NEC, Article 90, covering purpose and scope, be carefully reviewed.

The *NFPA Handbook of the National Electrical Code,* No. 70HB, sponsored by the NFPA, contains the complete NEC text plus explanations. This book is edited to correspond with each edition of the NEC. McGraw Hill's *Handbook of the National Electrical Code,* and other handbooks, provide explanations and clarification of the NEC requirements.

Each municipality or jurisdiction that elects to use the NEC must enact it into law or regulation. The date of enactment may be several years later than issuance of the code, in which event, the effective code may not be the latest edition. It is important to discuss this with the inspection or enforcing authority. Certain requirements of the latest edition of the Code may be interpreted as acceptable by the authority.

1.6.2 Other NFPA standards

The NFPA publishes the following related documents containing requirements on electrical equipment and systems:

— NFPA HFPE and Society of Fire Protection Engineers' *SFPE Handbook of Fire Protection Engineering*
— NFPA 101H, Life Safety Code Handbook
— NFPA 20, Centrifugal Fire Pumps, 1987

[3]Batterymarch Park, Quincy, MA 02269.
[4]11 West 42nd Street, 13th Floor, New York, NY 10036.

--`,,`,,`-`-`,,`,,`,`,,`---
Copyright The Institute of Electrical and Electronics Engineers, Inc.
Provided by IHS under license with IEEE
No reproduction or networking permitted without license from IHS
Not for Resale

— NFPA 70B, Electrical Equipment Maintenance, 1990

— NFPA 70E, Electrical Safety Requirements for Employee Workplaces, 1988

— NFPA 72, National Fire Alarm Code

— NFPA 75, Protection of Electronic Computer/Data Processing Equipment, 1992

— NFPA 77, Static Electricity, 1993

— NFPA 78, Lightning Protection Code, 1992

— NFPA 79, Electrical Standard for Industrial Machinery, 1991

— NFPA 92A, Smoke Control Systems, 1993

— NFPA 99, Health Care Facilities, 1990: Chapter 8: Essential Electrical Systems for Health Care Facilities; Appendix E: The Safe Use of High Frequency Electricity in Health Care Facilities

— NFPA 101, Life Safety Code, 1991

— NFPA 110, Emergency and Standby Power Systems, 1993

— NFPA 130, Fixed Guideway Transit Systems, 1990

1.6.3 Local, state, and federal codes and regulations

While most municipalities, counties, and states use the NEC (either with or without modifications), some have their own codes. In most instances, the NEC is adopted by local ordinance as part of the building code. Deviations from the NEC may be listed as addenda. It is important to note that only the code adopted by ordinance as of a certain date is official, and that governmental bodies may delay adopting the latest code. Federal rulings may require use of the latest NEC rulings, regardless of local rulings, so that reference to the enforcing agencies for interpretation on this point may be necessary.

Some city and state codes are almost as extensive as the NEC. It is generally accepted that in the case of conflict, the more stringent or severe interpretation applies. Generally the entity responsible for enforcing (enforcing authority) the code has the power to interpret it. Failure to comply with NEC or local code provisions, where required, can affect the owner's ability to obtain a certificate of occupancy, may have a negative effect on insurability, and may subject the owner to legal penalty.

Legislation by the U.S. federal government has had the effect of giving standards, such as certain American National Standards Institute (ANSI) standards, the impact of law. The Occupational Safety and Health Act, administered by the U.S. Department of Labor, permits federal enforcement of codes and standards. The Occupational Safety and Health Administration (OSHA) adopted the 1971 NEC for new electrical installations and also for major replacements, modifications, or repairs installed after March 5, 1972. A few articles and sections of the NEC have been deemed by OSHA to apply retroactively. The NFPA created an NFPA 70E (Electrical Requirements for Employee Workplaces) Committee to prepare a con-

Copyright The Institute of Electrical and Electronics Engineers, Inc.
Provided by IHS under license with IEEE
No reproduction or networking permitted without license from IHS Not for Resale

sensus standard for possible use by OSHA in developing their standards. Major portions of NFPA 70E have been included in OSHA regulations.

OSHA requirements for electrical systems are covered in 29 CFR Part 1910 of the Federal Register.[5]

The U.S. National Institute of Occupational Safety and Health (NIOSH) publishes "Electrical Alerts" to warn of unsafe practices or hazardous electrical equipment.[6]

The U.S. Department of Energy, in Building Energy Performance Standards, has advanced energy conservation standards. A number of states have enacted energy conservation regulations. These include ASHRAE/IES legislation embodying various energy conservation standards, such as ASHRAE/IES 90.1P, Energy Efficient Design of New Buildings Except Low Rise Residential Buildings. These establish energy or power budgets that materially affect architectural, mechanical, and electrical designs.

1.6.4 Standards and Recommended Practices

A number of organizations, in addition to the NFPA, publish documents that affect electrical design. Adherence to these documents can be written into design specifications.

The American National Standards Institute (ANSI) coordinates the review of proposed standards among all interested affiliated societies and organizations to assure a consensus approval. It is, in effect, a clearing house for technical standards. Not all standards are ANSI-approved. Underwriters Laboratories, Inc. (UL), and other independent testing laboratories may be approved by an appropriate jurisdictional authority (e.g., OSHA) to investigate materials and products, including appliances and equipment. Tests may be performed to their own or to another agency's standards and a product may be "listed" or "labeled." The UL publishes an Electrical Construction Materials Directory, an Electrical Appliance and Utilization Equipment Directory, a Hazardous Location Equipment Directory, and other directories. It should be noted that other testing laboratories (where approved) and governmental inspection agencies may maintain additional lists of approved or acceptable equipment; the approval must be for the jurisdiction where the work is to be performed. The Electrification Council (TEC),[7] representative of investor-owned utilities, publishes several informative handbooks, such as the Industrial and Commercial Power Distribution Handbook and the Industrial and Commercial Lighting Handbook, as well as an energy analysis computer program, called AXCESS, for forecasting electricity consumption and costs in existing and new buildings.

The National Electrical Manufacturers Associations (NEMA)[8] represents equipment manufacturers. Their publications serve to standardize certain design features of electrical equipment and provide testing and operating standards for electrical equipment. Some NEMA

---

[5]The Federal Register is available from the Superintendent of Documents, U.S. Government Printing Office, Washington, DC 20402, (202) 783-3238 on a subscription or individual copy basis.

[6]Copies of the bulletin are available from NIOSH Publications Dissemination, 4676 Columbia Parkway, Cincinnati, OH 45226.

[7]1111 19th Street, NW, Washington, DC 20036.

[8]2101 L Street, NW, Suite 300, Washington, DC 20037.

Copyright The Institute of Electrical and Electronics Engineers, Inc.
Provided by IHS under license with IEEE
No reproduction or networking permitted without license from IHS
Not for Resale

standards contain important application information for equipment such as motors and circuit breakers.

The IEEE publishes several hundred electrical standards relating to safety, measurements, equipment testing, application, maintenance, and environmental protection. Also published are standards on more general subjects, such as the use of graphic symbols and letter symbols. The IEEE Standard Dictionary of Electrical and Electronics Terms is of particular importance.

The Electric Generating Systems Association (EGSA)[9] publishes performance standards for emergency, standby, and cogeneration equipment.

The Intelligent Buildings Institute (IBI)[10] publishes standards on the essential elements of "high-tech" buildings.

The Edison Electric Institute (EEI)[11] publishes case studies of electrically space-conditioned buildings as well as other informative pamphlets.

The International Electrotechnical Commission (IEC) is an electrical and electronic standards generating body with a multinational membership. The IEEE is a member of the U.S. National Committee of the IEC.

1.7 Handbooks

The following handbooks have, over the years, established reputations in the electrical field. This list is not intended to be all-inclusive; other excellent references are available but are not listed here because of space limitations.

— Fink, D. G. and Beaty, H. W., *Standard Handbook for Electrical Engineers,* 12th edition, McGraw-Hill,[12] 1987. Virtually the entire field of electrical engineering is treated, including equipment and systems design.

— Croft, T., Carr, C. C., and Watt, J. H., *American Electricians Handbook,* 11th edition, New York, McGraw-Hill, 1987. The practical aspects of equipment, construction, and installation are covered.

— *Lighting Handbook,* Illuminating Engineering Society (IES).[13] This handbook is in two volumes (Applications, 1987; Reference, 1984). All aspects of lighting, including visual tasks, recommended lighting levels, lighting calculations, and lighting design are included in extensive detail in this comprehensive text.

[9]P.O. Box 9257, Coral Springs, FL 33065.
[10]2101 L Street, NW, Washington, DC 20037.
[11]1111 19th Street, NW, Washington, DC 20036.
[12]1221 Avenue of the Americas, New York, NY 10020.
[13]345 East 47th Street, New York, NY 10017.

Copyright The Institute of Electrical and Electronics Engineers, Inc.
Provided by IHS under license with IEEE
No reproduction or networking permitted without license from IHS Not for Resale

— *Electrical Transmission and Distribution Reference Book,* Westinghouse Electric Corporation,[14] 1964. All aspects of transmission, distribution, performance, and protection are included in detail.
— *Applied Protective Relaying,* Westinghouse Electric Corporation, 1976. The application of protective relaying to customer-utility interconnections, protection of high-voltage motors, transformers, and cable are covered in detail.
— *ASHRAE Handbook,* American Society of Heating, Refrigerating, and Air-Conditioning Engineers (ASHRAE).[15] This series of reference books in four volumes, which are periodically updated, details the electrical and mechanical aspects of space conditioning and refrigeration.
— *Motor Applications and Maintenance Handbook,* 2nd edition, Smeaton, R. S., editor, McGraw-Hill, 1987. Contains extensive, detailed coverage of motor load data and motor characteristics for coordination of electric motors with machine mechanical characteristics.
— *Industrial Power Systems Handbook,* Beeman, D. L., editor, McGraw-Hill, 1955. A text on electrical design with emphasis on equipment, including that applicable to commercial buildings.
— *Electrical Maintenance Hints,* Westinghouse Electric Corporation, 1984. The preventive maintenance procedures for all types of electrical equipment and the rehabilitation of damaged apparatus are discussed and illustrated.
— *Lighting Handbook,* Philips Lighting Company,[16] 1984. The application of various light sources, fixtures, and ballasts to interior and exterior commercial, industrial, sports, and roadway lighting projects.
— *Underground Systems Reference Book,* Edison Electric Institute, 1957. The principles of underground construction and detailed design of vault installations, cable systems, and related power systems are fully illustrated; cable splicing design parameters are thoroughly covered.
— *Switchgear and Control Handbook,* 2nd edition, Smeaton, R. S., editor, McGraw Hill, 1987. Concise, reliable guide to important facets of switchgear and control design, safety, application, and maintenance, including high- and low-voltage starters, circuit breakers, and fuses.
— *Handbook of Practical Electrical Design,* J. M. McPartland, Editor, McGraw Hill, 1984.

A few of the older texts may no longer be available for purchase but are available in most professional offices and libraries.

1.8 Periodicals

Spectrum, the monthly magazine of the IEEE that is circulated to all of its members, contains articles that cover current developments in all areas of electrical and electronics engineering. It contains references to IEEE books; technical publication reviews; technical meetings and

[14]Printing Division, Forbes Road, Trafford, PA 15085.
[15]1791 Tullie Circle, NE, Atlanta, GA 30329.
[16]200 Franklin Square Drive, P.O. Box 6800, Somerset, NJ 08875-6800.

Copyright The Institute of Electrical and Electronics Engineers, Inc.
Provided by IHS under license with IEEE
No reproduction or networking permitted without license from IHS
Not for Resale

conferences; IEEE group, society, and committee activities; abstracts of papers and publications of the IEEE and other organizations; and other material essential to the professional advancement of the electrical engineer.

The Transactions of the IAS of the IEEE are directly useful to industrial facility electrical engineers. Some other well-known periodicals follow:

— *ASHRAE Journal,* American Society of Heating, Refrigerating and Air-Conditioning Engineers
— *Electrical Construction and Maintenance (EC&M).* Intertec Publishing Corp.[17]
— *Fire Journal,* National Fire Protection Association (NFPA)
— *IAEI News,* International Association of Electrical Inspectors
— *Lighting Design and Application (LD&A),* Illuminating Engineering Society
— *Electrical Systems Design,* Andrews Communications, Inc.[18]
— *Engineering Times,* National Society of Professional Engineers (NSPE)[19]
— *Consulting-Specifying Engineer,* Cahners Publishing Co.[20]
— *Plant Engineering,* Cahners Publishing Co.

1.9 Manufacturers' Data

The electrical industry, through its associations and individual manufacturers of electrical equipment, issues many technical bulletins, data books, and magazines. While some of this information is difficult to obtain, copies should be available to each major design unit. The advertising sections of electrical magazines contain excellent material, usually well illustrated and presented in a clear and readable form, concerning the construction and application of equipment. Such literature may be promotional; it may present the advertiser's equipment or methods in a best light and should be carefully evaluated. Manufacturers' catalogs are a valuable source of equipment information. Some manufacturers' complete catalogs are quite extensive, covering several volumes. However, these companies may issue condensed catalogs for general use. A few manufacturers publish regularly scheduled magazines containing news of new products and actual applications. Data sheets referring to specific items are almost always available from marketing offices.

1.10 Safety

Safety of life and preservation of property are two of the most important factors in the design of the electrical system. In industrial facilities, continuity of the production and related processes may be critical. The loss of production may result in financial loss because of idle time for employees and machinery, the inability to meet schedules for deliveries, and materials handling and spoilage of materials in process. Safety considerations may be aggravated by

[17]1221 Avenue of the Americas, New York, NY 10020.
[18]5123 West Chester Pike, P.O. Box 556, Edgemont, PA 19028.
[19]1420 King Street, Alexandria, VA 22314.
[20]Cahners Plaza, 1350 East Touhy Avenue, P.O. Box, 508, Des Plaines, IL 60017-8800.

Copyright The Institute of Electrical and Electronics Engineers, Inc.
Provided by IHS under license with IEEE
No reproduction or networking permitted without license from IHS Not for Resale

the sheer amount of complex electrical connections and the nature of the machinery. The poor quality or failure of electric power to equipment can cause, in some industrial processes, conditions that can result in hazardous situations. Electromagnetic interference (EMI) can cause safety controls to fail in marginally designed systems.

Various codes provide rules and regulations as minimum safeguards of life and property. The electrical design engineer may often provide greater safeguards than outlined in the codes, according to his or her best judgment, while also giving consideration to utilization and economics.

Personnel safety may be divided into two categories:

— Safety for maintenance and operating personnel;
— Safety for others, including visitors, production staff, and non-production staff in the vicinity.

Safety for maintenance and operating personnel is achieved through proper design and selection of equipment with regard to enclosures, key-interlocking, circuit breaker and fuse interrupting capacity, the use of high-speed fault detection and circuit-opening devices, clearances, grounding methods, and identification of equipment.

Safety for others requires that all circuit-making-and-breaking equipment, as well as other electrical apparatus, be isolated from casual contact. This is achieved by using dead-front equipment, locked rooms and enclosures, proper grounding, limiting of fault levels, installation of barriers and other isolation (including special ventilating grilles), proper clearances, adequate insulation, and similar provisions outlined in this standard.

The U.S. Department of Labor has issued the “OSHA Rule on Lockout/Tagout” published in the Federal Register (53 FR 1546, January 2, 1990), which is concerned with procedures for assuring the safety of workers directly involved in working with or near energized conductors or conductors which, if energized, could be hazardous.

The National Electrical Safety Code (NESC) (Accredited Standards Committee C2-1993) is available from the IEEE. It covers basic provisions for safeguarding from hazards arising from the installation operation or maintenance of a) conductors in electric supply stations, and b) overhead and underground electric supply and communication lines. It also covers work rules for construction, maintenance, and operation of electric supply and communication equipment. Part 4 deals specifically with safe working methods.

Circuit protection is a fundamental safety requirement of all electrical systems. Adequate interrupting capacities are required in services, feeders, and branch circuits. Selective, automatic isolation of faulted circuits represents good engineering. Fault protection, covered in Chapters 5 and 6, should be designed and coordinated throughout the system. Physical protection of equipment from damage or tampering, and exposure of unprotected equipment to electrical, chemical, and mechanical damage is necessary.

Copyright The Institute of Electrical and Electronics Engineers, Inc.
Provided by IHS under license with IEEE
No reproduction or networking permitted without license from IHS
Not for Resale

1.10.1 Appliances and equipment

Improperly applied or inferior materials can cause electrical failures. The use of appliances and equipment listed by UL, OSHA, or other approved laboratories is recommended. The Association of Home Appliance Manufacturers (AHAM)[21] and the Air-Conditioning and Refrigeration Institute (ARI)[22] specify the manufacture, testing, and application of many common appliances and equipment. High-voltage equipment and power cable is manufactured in accordance with UL, NEMA, ANSI, and IEEE standards. Engineers should make sure that the equipment they specify and accept conforms to these standards. Properly prepared specifications can prevent the purchase of inferior or unsuitable equipment. The lowest initial purchase price may not result in the lowest cost after taking into consideration operating, maintenance, and owning costs. Value engineering is an organized approach to the identification of unnecessary costs, which utilizes such methods as life-cycle cost analysis, and related techniques.

1.10.2 Operational considerations

When design engineers lay out equipment rooms and locate electrical equipment, they cannot always avoid having some areas accessible to unqualified persons. Dead-front construction should be utilized whenever practical. Where dead-front construction is not available, as may be the case for certain industrial configurations or in existing installations, all exposed electrical equipment should be placed behind locked doors or gates or otherwise suitably guarded. Proper barricading, signing, and guarding should be installed and maintained on energized systems or around machinery that could be hazardous, or is located in occupied areas. Work rules, especially in areas of medium or high voltage, should be established.

Work on energized power systems or equipment should be permitted only where qualified staff is available to perform such work and only if it is essential. This is foremost a matter of safety, but is also required to prevent damage to equipment. A serious cause of failure, attributable to human error, is unintentional grounding or phase-to-phase short circuiting of equipment that is being worked on. By careful design, such as proper spacing and barriers, and by enforcement of published work-safety rules, the designer can minimize this hazard. Unanticipated backfeeds through control circuitry, from capacitors, instrument transformers, or test equipment, presents a danger to the worker.

Protective devices, such as ground-fault relays and ground-fault detectors (for high-resistance or ungrounded systems), will minimize damage from electrical failures. Electrical fire and smoke can cause maintenance staff to disconnect all electric power, even if there is not direct danger to the occupants. Electrical failures that involve smoke and noise, even though occurring in unoccupied areas, may cause confusion to the working population. Nuisance tripping, which may interrupt industrial processes, can be minimized by careful design and selection of protective equipment.

---

[21]20 North Wacker Drive, Chicago, IL 60606.

[22]815 North Fort Myer Drive, Arlington, VA 22209.

Copyright The Institute of Electrical and Electronics Engineers, Inc.
Provided by IHS under license with IEEE
No reproduction or networking permitted without license from IHS Not for Resale

1.11 Maintenance

Maintenance is essential to proper operation. The installation should be so designed that maintenance can be performed with normally available maintenance personnel (either in-house or contract). Design details should provide proper space, accessibility, and working conditions so that the systems can be maintained without difficulty and excessive cost.

Generally, the external systems are operated and maintained by the electrical utility, though at times they are a part of the plant distribution system. Where continuity of service is essential, suitable transfer equipment and alternate sources should be provided. Such equipment is needed to maintain minimum lighting requirements for passageways, stairways, and critical areas as well as to supply power to critical loads. These systems usually include automatic or manual equipment for transferring loads on loss of normal supply power or for putting battery or generator-fed equipment into service.

Annual or other periodic shut-down of electrical equipment may be necessary to perform required electrical maintenance. Protective relaying systems, circuit breakers, switches, transformers, and other equipment should be tested on appropriate schedules. Proper system design can facilitate this work.

1.12 Design considerations

Electrical equipment usually occupies a relatively small percentage of the total plant space and, in design, it may be easier to relocate electrical service areas than mechanical areas or structural elements. Allocation of space for electrical areas is often given secondary consideration by plant engineering, architectural, and related specialties. In the competing search for space, the electrical engineer is responsible for fulfilling the requirements for a proper electrical installation while recognizing the flexibility of electrical systems in terms of layout and placement.

It is essential that the electrical engineer responsible for designing plant power systems have an understanding of the manufacturing processes and work flow to the extent that he can form part of the planning team and assure that the optimum design is provided. In manufacturing areas, considerations of architectural finishes and permanence are usually secondary to production efficiency and flexibility. Special provisions could be required, as part of the manufacturing process, for reduction of EMI (see 1.19.3), for continuity of supply, and for complex control systems.

1.12.1 Coordination of design

Depending on the type and complexity of the project, the engineer will need to cooperate with a variety of other specialists. These potentially include mechanical, chemical, process, civil, structural, industrial, production, lighting, fire protection, and environmental engineers; maintenance planners; architects; representatives of federal, state, and local regulatory agencies; interior and landscape designers; specification writers; construction and installation contractors; lawyers; purchasing agents; applications engineers from major equipment suppliers

Copyright The Institute of Electrical and Electronics Engineers, Inc.
Provided by IHS under license with IEEE
No reproduction or networking permitted without license from IHS
Not for Resale

and the local electrical utility; and management staff of the organization that will operate the facility.

The electrical designer must become familiar with local rules and know the authorities having jurisdiction over the design and construction. It can be inconvenient and embarrassing to have an electrical project held up at the last moment because proper permits have not been obtained; for example, a permit for a street closing to allow installation of utilities to the site or an environmental permit for an on-site generator.

Local contractors are usually familiar with local ordinances and union work rules and can be of great help in avoiding pitfalls. In performing electrical design, it is essential, at the outset, to prepare a checklist of all the design stages that have to be considered. Major items include temporary power, access to the site, and review by others. Certain electrical work may appear in non-electrical sections of the specifications. For example, furnishing and connecting of electric motors and motor controllers may be covered in the mechanical section of the specifications. For administrative control purposes, the electrical work may be divided into a number of contracts, some of which may be under the control of a general contractor and some of which may be awarded to electrical contractors. Among items with which the designer will be concerned are preliminary cost estimates, final cost estimates, plans or drawings, technical specifications (the written presentation of the work), materials, manuals, factory inspections, laboratory tests, and temporary power. The designer may also be involved in providing information on electrical considerations that affect financial justification of the project in terms of owning and operating costs, amortization, return on investment, and related items.

1.12.2 Flexibility

Flexibility of the electrical system means adaptability to development and expansion as well as to changes to meet varied requirements during the life of the facility. Sometimes a designer is faced with providing power in a plant where the loads may be unknown. For example, some manufacturing buildings are constructed with the occupied space designs incomplete (shell and core designs). In some cases, the designer will provide only the core utilities available for connection by others to serve the working areas. In other cases, the designer may lay out only the basic systems and, as the tenant requirements are developed, fill in the details. A manufacturing division or tenant may provide working space designs.

Because it is usually difficult and costly to increase the capacity of feeders, it is important that provisions for sufficient capacity be provided initially. Industrial processes, including manufacturing, may require frequent relocations of equipment, addition of production equipment, process modifications, and even movement of equipment to and from other sites; therefore, a high degree of system flexibility is an important design consideration.

Extra conductors or raceway space should be included in the design stage when additional loads are added. In most industrial plants, the wiring methods involve exposed conduits, cable trays, and other methods where future changes will not affect architectural finishes. When required, space must be provided for outdoor substations, underground systems including spare ducts, and overhead distribution.

Copyright The Institute of Electrical and Electronics Engineers, Inc.
Provided by IHS under license with IEEE
No reproduction or networking permitted without license from IHS Not for Resale

Flexibility in an electrical wiring system is enhanced by the use of oversize or spare raceways, cables, busways, and equipment. The cost of making such provisions is usually relatively small in the initial installation. Space on spare raceway hangers and openings (sealed until needed) between walls and floors may be provided at relatively low cost for future work. Consideration should be given to the provision of electrical distribution areas for future expansion. Openings through floors should be sealed with fireproof (removable) materials to prevent the spread of fire and smoke between floors. For computer rooms and similar areas, flexibility is frequently provided by raised floors made of removable panels, providing access to a wiring space between the raised floor and the slab below.

Industrial facilities most frequently use exposed wiring systems in manufacturing areas for greater economy and flexibility. Plug-in busways and trolley-type busways can provide a convenient method of serving machinery subject to relocation. Cable trays for both power and control wiring are widely used in industrial plants. Exposed armored cable is a possible convenient method of feeding production equipment.

1.12.3 Specifications

A contract for installation of electrical systems consists of both a written document and drawings. The written document contains both legal (non-technical) and engineering (technical) sections. The legal section contains the general terms of the agreement between contractor and owner, such as payment, working conditions, and time requirements, and it may include clauses on performance bonds, extra work, penalty clauses, and damages for breach of contract.

The engineering section includes the technical specifications. The specifications give descriptions of the work to be done and the materials to be used. It is common practice in larger installations to use a standard outline format listing division, section, and subsection titles or subjects of the Construction Specifications Institute (CSI).[23] Where several specialties are involved, Division 16 covers the electrical installation and Division 15 covers the mechanical portion of the work. The building or plant automation system, integrating several building control systems, is covered in CSI Division 13—Special Construction. It is important to note that some electrical work will almost always be included in CSI Divisions 13 and 15. Division 16 has a detailed breakdown of various items, such as switchgear, motor starters, and lighting equipment, specified by CSI.

To assist the engineer in preparing contract specifications, standard technical specifications (covering construction, application, technical, and installation details) are available from technical publishers and manufacturers (which may require revision to avoid proprietary specifications). Large organizations, such as the U.S. Government General Services Administration and the Veterans Administration, develop their own standard specifications. The engineer should keep several cautions in mind when using standard specifications. First, they are designed to cover a wide variety of situations, and consequently they will contain considerable material that will not apply to the specific facility under consideration, and they may lack other material that should be included. Therefore, standard specifications must be appropri-

[23]601 Madison Avenue, Industrial Park, Alexandria, VA 22314.

Copyright The Institute of Electrical and Electronics Engineers, Inc.
Provided by IHS under license with IEEE
No reproduction or networking permitted without license from IHS
Not for Resale

ately edited and supplemented to embody the engineer's intentions fully and accurately. Second, many standard specifications contain material primarily for non-industrial facilities, and may not reflect the requirements of the specific industrial processes.

MASTERSPEC, issued by American Institute of Architects (AIA),[24] permits the engineer to issue a full-length specification in standardized format. SPECTEXT II, which is an abridged computer program with similar capabilities, is issued by CSI. CEGS and NFGS are the U.S. Army Corps of Engineers and the U.S. Naval Facilities Engineering Command Guide Specifications.

Computer-aided specifications (CAS) have been developed that will automatically create specifications as an output from the CAE-CADD process (see 1.12.4).

1.12.4 Drawings

Designers will usually be given preliminary architectural drawings as a first step. These drawings permit the designers to arrive at the preliminary scope of the work, roughly estimate the requirements, and determine in a preliminary way the location of equipment and the methods and types of lighting. In this stage of the design, such items as primary and secondary distribution systems and major items of equipment will be decided. The early requirements for types of machinery to be installed will be determined. If a typical plant of the type to be built or modernized exists, it would be well for the engineer to visit such a facility and to study its plans, cost, construction, and operational history.

Early in the design period, the designer should emphasize the need for room to hang conduits and cable trays, crawl spaces, structural reinforcements for equipment, and special floor loadings; and for clearances around substations, switchgear, transformers, busways, cable trays, panelboards, switchboards, and other items that may be required. It is much more difficult to obtain such special requirements once the design has been committed. The need for installing, removing, and relocating machinery must also be considered.

The one-line diagrams should then be prepared in conformity with the utility's service requirements. Based on these, the utility will develop a *service layout*. Checking is an essential part of the design process. The checker looks for design deficiencies in the set of plans. The designer can help the checker by having on hand reference and catalog information detailing the equipment he has selected. The degree of checking is a matter of design policy.

Computer-aided engineering (CAE) and computer-aided design and drafting (CADD) systems are tools by which the engineer/designer can perform automatic checking of interferences and clearances with other trades. The development of these computer programs has progressed to the level of automatically performing load-flow analysis, fault analysis, and motor-starting analysis from direct entry of the electrical technical data of the components and equipment.

[24] 1735 New York Avenue, NW, Washington, DC 20006.

Copyright The Institute of Electrical and Electronics Engineers, Inc.
Provided by IHS under license with IEEE
No reproduction or networking permitted without license from IHS Not for Resale

1.12.5 Manufacturer's or shop drawings

After the design has been completed and contracts are awarded, contractors, manufacturers and other suppliers will submit drawings for review or information. It is important to review and comment upon these drawings and return them as quickly as possible; otherwise, the supplier and/or contractor may claim that the work was delayed by the engineer's review process. Unless the drawings contain serious errors and/or omissions, it is usually a good practice not to reject them but to stamp the drawings with terminology such as "revise as noted" and mark them to show errors, required changes, and corrections. The supplier can then make appropriate changes and proceed with the work without waiting to resubmit the drawings for approval.

If the shop drawings contain major errors or discrepancies, however, they should be rejected with a requirement that they be resubmitted to reflect appropriate changes that are required on the basis of notes and comments of the engineer.

Unless otherwise directed, communication with contractors and suppliers is always through the construction (often inspection) authority. In returning corrected shop drawings, remember that the contract for supplying the equipment is usually with the general contractor and that the official chain of communication is through him or her. Sometimes direct communication with a subcontractor or a manufacturer may be permitted; however, the content of such communication should always be confirmed in writing with the general contractor. Recent lawsuits have resulted in placing the responsibility for shop drawing correctness (in those cases and possibly future cases) upon the design engineer, leaving no doubt that checking is an important job.

1.13 Estimating

A preliminary estimate is usually requested. Sometimes the nature of a preliminary estimate makes it nothing more than a good guess. Enough information is usually available, however, to perform the estimate on a square foot, per process machine, per production area, by the horsepower or number of motors, or on a similar basis for a comparable facility.

A second estimate is often provided after the project has been clearly defined but before any drawings have been prepared. The electrical designer can determine from sketches and architectural layouts the type of lighting fixtures as well as many items of heavy equipment that are to be used. Lighting fixtures, as well as most items of heavy equipment, can be priced directly from the catalogs, using appropriate discounts.

The most accurate estimate is made when drawings have been completed and bids are about to be received or the contract negotiated. The estimating procedure of the designer in this case is similar to that of the contractor's estimator. It involves first the takeoffs, that is, counting the number of receptacles, lighting fixtures, lengths of wire and conduit, determining the number and types of equipment, and then applying unit costs for labor, materials, overhead, and profit.

--`,,`,,`-`-`,,`,,`,`,,`---
Copyright The Institute of Electrical and Electronics Engineers, Inc.
Provided by IHS under license with IEEE
No reproduction or networking permitted without license from IHS
Not for Resale

The use of standard estimating sheets is a big help. Various forms are available from the National Electrical Contractors' Association (NECA).[25] For preliminary estimates, there are a number of general estimating books that give unit cost figures (often per square foot) and other general costs, such as the following three titles: *Building Construction Cost Data; Mechanical Cost Data;* and *Electrical Cost Data*.[26] Several computer programs permit streamlining and standardizing engineering estimating.

Chapter 16 illustrates the detailed procedures for making estimates for industrial facilities.

Extra work ("extras") refers to work performed by the contractor that has to be added to the contract because of unforeseen conditions or changes in the scope of work. The contractor is not usually faced with competition in making these changes; therefore, extra work is expected to be more costly than the same work would be if included in the original contract. Extra cost on any project can be minimized by giving greater attention to design details in the original planning stage. On rehabilitation or modification work, extras are more difficult to avoid; however, with careful field investigation, extras can be held to a minimum.

1.14 Contracts

Contracts for construction may be awarded on either a lump-sum or a unit-price basis, or on a cost-plus (time-and-material) basis. A lump sum involves pricing the entire job as one or several major units of work.

The unit-price basis simply specifies so much per unit of work, for example, so many dollars per foot of 3-inch conduit. The lump-sum contract is usually preferable when the design can be worked out in sufficient detail. The unit-price contract is desirable when it is not possible to determine exactly the quantities of work to be performed and when a contractor, in order to provide a lump-sum contract, might have to overestimate the job to cover items that could not accurately be determined from the drawings.

If the unit-price basis is used, the estimated quantities should be as accurate as possible, otherwise it may be advantageous for the contractor to quote unit prices of certain items as high as possible and reduce other items to a minimum figure. It could be to the contractor's advantage to list those items highest on which payment would be received first or those items that would be most likely to increase in quantity.

The time-and-material basis is valuable for emergency or extra work where it would be impractical to use either of the above two methods. It has the disadvantage of requiring a close audit of manpower and material expenditures of the contractor. Where only a part of the work is not clearly defined, a combination of the three pricing methods might be in order.

---

[25]7315 Wisconsin Avenue, Bethesda, MD 20814.

[26]Published by R. Snow Means Co., 100 Construction Plaza Avenue, Kingston, MA.

Copyright The Institute of Electrical and Electronics Engineers, Inc.
Provided by IHS under license with IEEE
No reproduction or networking permitted without license from IHS Not for Resale

1.15 Access and loading

It is imperative that the equipment fit into the area specified and that the floor-load rating be adequate for the weight of the equipment. Sizes of door openings, corridors, and elevators for moving of equipment (initially and for maintenance and replacement purposes) must be checked. However, it is easy to forget that equipment has to be moved across floors, and that the floor-load ratings of the access areas for moving the equipment must be adequate for this. If floor strengths are not adequate, provision must be made to reinforce the floor or, if practical, to specify that the load be distributed so that loading will not exceed structural limitations.

It is important to review weights and loadings with the structural engineers. Sometimes it is necessary to provide removable panels, temporarily remove windows, and even to make minor structural changes in order to move large and heavy pieces of equipment or machinery. Provisions also must be made for removal of equipment for replacement purposes. Clearances must be in accordance with code provisions regarding working space. Clearance must also be provided for installation, maintenance, and such items as cable pulling, transformer replacement, maintenance/testing, and switchgear-drawout space. It is often essential to phase items of work in order to avoid conflict with other electrical work or work of other trades.

1.16 Contractor performance

Contractors may be selected on the basis of bid or quoted price or by negotiation. Governmental or corporate policies may mandate selection of the lowest qualified bidder. Where the relative amount of electrical work is large, the contract may be awarded to an electrical contractor. In other instances, the work may be awarded to an electrical subcontractor by the overall general contractor.

The performance of the work will usually be monitored and inspected by representatives of the owner and the engineer-of-record. The work may be subject to the inspection of governmental and other assigned approval agencies, such as insurance underwriters. The designer may communicate with the contractor only to the extent permitted by the agency exercising control over the contract.

It is essential that designers, in attempting to expedite the contract, not place themselves in the position of requesting without proper authorization, or “reading into” the contract, what is not clearly required by the specifications or drawings.

The contract may require the contractor to deliver, at the end of the work, revised contract drawings, known as “as-built” drawings. These show all changes in the work that may have been authorized, or details that were not shown on the original drawings.

Copyright The Institute of Electrical and Electronics Engineers, Inc.
Provided by IHS under license with IEEE
No reproduction or networking permitted without license from IHS
Not for Resale

1.17 Environmental considerations

In all branches of engineering, an increasing emphasis is being placed on social and environmental concerns. Today's engineer must consider air, water, noise, lighting, and other items that have an environmental impact. The limited availability of energy sources and the steadily increasing cost of electric energy require that energy conservation be addressed.

This issue is becoming more than just a matter of conscience or professional ethics. Laws, codes, rules, and standards issued by legislative bodies, governmental agencies, public service commissions, insurance, and professional organizations (including groups whose primary concern is the protection of the environment and conservation of natural resources) increasingly require an assessment of how the project may affect the environment. Energy conservation is covered in Chapter 14. Environmental studies, which include the effect of noise, vibration, exhaust gasses, lighting, and effluence, must be considered in relationship to the working environment, the general environment, and the public.

Landscape architects can provide pleasing designs of trees and shrubbery to completely conceal outdoor substations and overhead lines may, of course, be replaced by underground systems. Substations situated in residential areas must be carefully located so as not to create a local nuisance. Precast sound barriers can reduce transformer and other electrical equipment noise. Floodlighting and parking-lot lighting must not spill onto adjacent areas where it may provide undesirable glare or lighting levels (see IES Committee Report CP-46-85 [B9]). The engineer should keep up-to-date on developments in the areas of environmental protection and energy conservation. Federal Environmental Protection Agency guidelines and judicial rulings on local environmental litigation are generally covered in the Federal Register and in the periodicals previously listed.

1.18 Technical files

Drawings and other technical files are often kept in file cabinets as originals or copies. A system of filing and reference is essential when many such items are involved. A computerized data base may a valuable method of referencing and locating the proper document. When drawings are produced by computer-graphic systems, such as CADD, magnetic tape may be used for storage. Plotters can be used with computer systems to produce hard copy. Original drawings (often prepared on tracing material) can be stored photographically on film; the drawings can be made available on viewers or enlarger-printers. Microfiche involves placing the microfilm on computer-type cards for handling manually or in data-processing type systems.

1.19 Electronic systems

Electronic systems are a major item in industrial facilities for control purposes, motor control, lighting ballasts, communication systems, data processing, computer applications, industrial process control, data management, and plant (building) management systems. This subclause is concerned primarily with the effects of the power supply, control and power

--`,,`,,`-`-`,,`,,`,`,,`---

Copyright The Institute of Electrical and Electronics Engineers, Inc.
Provided by IHS under license with IEEE
No reproduction or networking permitted without license from IHS Not for Resale

wiring, and interference on these systems; and with some indication of the extent of the use of electronic equipment in industrial facilities.

Industrial processes often require a degree of speed and torque control of motors, which is obtainable through the use of electronic controllers and computer-based control systems (see Chapter 10). Electronic power supplies/controllers are used for supplying power to heat-process systems and to electrochemical processes. The electronic controller has the advantage of being able to tie together the power equipment, the control computers, the sensing equipment, data acquisition and display systems, robotics, and telemetering equipment into an effective package. Subclause 1.3.1 lists the committees, by industry and application, that are involved with and publish extensive technical material in this area.

1.19.1 Power supply disturbances

The power supply to equipment may contain transients and other short-term under- or over-voltages that result primarily from switching operations, faults, motor starting, lightning disturbances, switching of capacitors, electric welding, and operation of heavy manufacturing equipment. The system may also contain a harmonic content as described in 1.19.2 below. These electrical disturbances may be introduced anywhere on an electric system or in the utility supply, even by other utility customers connected to the same circuits. A term frequently applied to describe the absence or presence of these power deficiencies is *power quality.* The IEEE Emerald Book (see 1.3.2) examines in detail the effects of the power supply on equipment performance. It covers methods of diagnosing and correcting performance problems related to the power supply.

1.19.2 Harmonics

Chapter 9 of this book, Chapter 10 of the Brown Book, the Emerald Book, and IEEE Std 519-1992 [B5] all contain discussion of harmonics. Harmonics are integral multiples of the fundamental (line) frequency involving nonlinear loads or control devices, including electromagnetic devices (transformers, lighting ballasts) and solid-state devices (rectifiers, thyristors, phase-controlled switching devices). In the latter grouping are power rectifiers, adjustable-speed electronic controllers, switching-mode power supplies (used in smaller computers), and UPS systems.

Harmonics can cause or increase EMI in sensitive electronic systems, abnormal heating or cables and motors, transformers, and other electromagnetic equipment, excessive capacitor currents, and excessive voltages because of system resonances at harmonic frequencies.

Recently, it has been determined that the harmonic content of multiwire systems having a high proportion of switching-mode power supplies is very high. The neutral conductors of these systems must be sized at greater than full rating, and transformers must be derated or designed for high-harmonic content. A full discussion of harmonics is beyond the scope of this subclause; reference should be made to the previously mentioned publications.

Copyright The Institute of Electrical and Electronics Engineers, Inc.
Provided by IHS under license with IEEE
No reproduction or networking permitted without license from IHS
Not for Resale

1.19.3 Electromagnetic interference (EMI)

EMI is the impairment of a wanted electromagnetic signal by an electromagnetic disturbance. EMI can enter equipment either by conduction through power, grounding, control, data, or shielding conductors, or by induction from local electromagnetic or electrostatic fields. The most common causes of EMI problems in sensitive equipment, such as computers, communications equipment, and electronic controllers, are poor inherent design of the equipment or power supply, poor grounding, and unsound design of the equipment interfaces.

It can be reduced by the use of effective grounding (both electronic and equipment grounds), shielding, twisted conductors (pairs) and coaxial cables, and effective use of conduit (especially steel conduit) for control and power (where practical) circuits [B3], [B4]. EMI and other power problems can cause control and equipment malfunctions, slowing of computer operations, lack of reliability, and failure of critical systems. These failures can affect product quality and, in some cases, worker safety.

The use of filters, voltage regulators, surge capacitors, surge arresters, isolation transformers (particularly with electrostatic shielding between coils), power conditioners, UPS systems, or motor-generator sets for isolation are all methods of reducing EMI. Fiber-optic cables and electro-optical isolation at interfaces are extremely effective methods of providing isolation between systems.

1.20 Programmable logic controller (PLC)

The PLC is a microprocessor designed for control and telemetering systems. It is programmed to accept “ladder-type” logic, which enables the operator to use relay-type logic, thereby avoiding the need to use the conventional software languages. The equipment can be housed in cases suitable for mounting in exposed locations and on production floors.

1.21 Bibliography

[B1] ANSI C84.1-1989, American National Standard Electric Power Systems and Equipment—Voltage Ratings (60 Hz).

[B2] ANSI/NFPA 70-1993, National Electrical Code.

[B3] Griffith, D. C., *Uninterruptible Power Supplies*, Marcel Decker, Inc., 1989.

[B4] IEEE Std 518-1982 (Reaff 1990), IEEE Guide for the Installation of Electrical Equipment to Minimize Noise Inputs to Controllers from External Sources (ANSI).

[B5] IEEE Std 519-1992, IEEE Recommended Practices and Requirements for Harmonic Control in Electric Power Systems (ANSI).

Copyright The Institute of Electrical and Electronics Engineers, Inc.
Provided by IHS under license with IEEE
No reproduction or networking permitted without license from IHS Not for Resale

[B6] IEEE Std 100-1992, The New IEEE Standard Dictionary for Electrical and Electronics Terms (ANSI).

[B7] IEEE Std 693-1984 (Reaff 1991), IEEE Recommended Practices for Seismic Design of Substations (ANSI).

[B8] IEEE Std 979-1984 (Reaff 1988), IEEE Guide for Substation Fire Protection (ANSI).

[B9] IES Committee Report CP-46-85, “Astronomical Light Pollution and Light Trespass.”

Copyright The Institute of Electrical and Electronics Engineers, Inc.
Provided by IHS under license with IEEE
No reproduction or networking permitted without license from IHS
Not for Resale

This page intentionally left blank

Copyright The Institute of Electrical and Electronics Engineers, Inc.
Provided by IHS under license with IEEE
No reproduction or networking permitted without license from IHS
Not for Resale

Chapter 2
System planning

2.1 Introduction

The continuity of production in an industrial plant is only as reliable as its electric power distribution system. This chapter outlines procedures and various considerations for system planning and presents a guide to the use of the succeeding chapters.

No standard electric distribution system is adaptable to all industrial plants, because two plants rarely have the same requirements. The specific requirements must be analyzed qualitatively for each plant and the system designed to meet its electrical requirements. Equal and adequate consideration must be given to both the present and future operating and load conditions.

2.2 Definitions

See 2.4.1.3 for definitions related to demand.

2.3 Basic design considerations

The approach to system planning should include several basic considerations that will affect the overall design and operation.

2.3.1 Safety

Safety of life and preservation of property are two of the most important factors to be considered in the design of the electric system. Codes must be followed and recommended practices or standards should be followed in the selection and application of material and equipment.

Equally important is providing equipment that is properly and adequately sized and rated to handle available fault levels in the system in accordance with established fault duty calculation procedures. Adequate safety features should be incorporated into all parts of the system.

Listed below are the electric system operating and design limits that should be considered in order to provide safe working conditions for personnel:

a) Interrupting devices must be able to function safely and properly under the most severe duty to which they may be exposed.
b) Protection must be provided against accidental contact with energized conductors, such as enclosing the conductors, installing protective barriers, or installing the conductors at sufficient height to avoid accidental contact.

Copyright The Institute of Electrical and Electronics Engineers, Inc.
Provided by IHS under license with IEEE
No reproduction or networking permitted without license from IHS
Not for Resale

c) Isolating switches must not be operated while they are carrying current, unless they are designed to interrupt such current. They should be equipped with safety interlocks and warning signs if load or transformer magnetizing current-load-interrupting and fault-closing capability are not provided.

d) In many instances it is desirable to isolate a power circuit breaker using disconnect switches. In such cases, the circuit breaker must be opened before the disconnect switches. Safety interlocks to ensure this sequence should be used, together with detailed and specific personnel operating instructions.

e) The system should be designed so that maintenance work on circuits and equipment can be accomplished with the particular circuits and equipment de-energized and grounded. System design should provide for locking out circuits or equipment for maintenance, including grounding instructions. A written procedure should be established to provide instructions on tagging or locking out circuits during maintenance, and re-energizing after completion of the maintenance work following disconnection of the grounding equipment.

f) Electric equipment rooms, especially those containing apparatus over 600 V, such as transformers, motor controls, or motors, should be equipped and located to eliminate or minimize the need for access by nonelectrical maintenance or operating personnel. Conveniently located exits should be provided to allow quick exit during an emergency.

g) Electric apparatus located outside special rooms should be provided with protection against mechanical damage due to equipment location, personnel access, and vehicular traffic. The area should be accessible to maintenance and operating personnel for emergency operation of protective devices.

h) Equipment location should be carefully considered. A nonhazardous area should be set aside for electrical equipment, or it may be necessary to locate explosion-proof equipment in the hazardous area. The advantages and disadvantages of not only initial cost but the maintenance cost and the ability to maintain the integrity of the equipment should all be carefully considered.

i) Warning signs should be installed on electric equipment accessible to unqualified personnel, on fences surrounding electric equipment, on doors giving access to electrical rooms, and on conduits or cables above 600 V in areas that include other equipment or pipelines. An electrical single-line diagram should be installed in each electrical switching room.

j) An adequate grounding system must be installed.

k) Emergency lights should be provided where necessary to protect personnel against sudden lighting failure. In facilities, the Life Safety Codes requires that escape routes and exits have emergency lighting. In addition, process control locations and electric switching centers should be equipped with standby lighting.

l) Operating and maintenance personnel should be provided with complete operating and maintenance instructions, including wiring diagrams, equipment ratings, and protective device settings. Spare fuses of the correct ratings should be stocked.

2.3.2 Reliability of plant primary utility supply service

The continuity of service required is dependent on the type of manufacturing or process operation of the plant and the cost of that operation, especially if it is interrupted. Some plants can

Copyright The Institute of Electrical and Electronics Engineers, Inc.
Provided by IHS under license with IEEE
No reproduction or networking permitted without license from IHS Not for Resale

tolerate interruptions while others require the highest degree of service continuity. The system should always be designed to isolate faults with a minimum disturbance to the system and should have features to give the maximum dependability consistent with the plant requirements and justifiable cost.

The majority of utilities today supply energy to medium and large industrial customers directly at 34.5, 69, 115, 138, 161 and 230 kV using dedicated substations. Small industrial complexes may receive power at voltages as low as 4 kV.

Some industrial plants accept supplies directly from utility area distribution substations at 4.16, 12.5, 13.8 kV, etc. In most instances, the utility substations also serve other customers so that there are usually several distribution lines connected to the same bus as the plant supply line(s), although in some cases dedicated services, including bus(es) and lines, are provided. For the most part, plant personnel feel secure with this type of supply, especially if the supply substation is nearby and if multiple supply lines are provided to meet *firm power* or first contingency requirements. However, these provisions can create a false sense of security, especially when the facts regarding the reliability of distribution lines, the impact of nearby customer faults and system operations on such services, and the impact this has on plant operations are overlooked. For example, when a fault occurs on the supply system near the plant, there is an accompanying voltage sag on all of the plant primary distribution and utilization voltage buses. This lowered voltage persists while the utility relays operate and until the utility breaker trips, at which point the voltage will be reduced to zero on the faulted line and will be restored to near normal on the unfaulted portions of the system. Experience has shown that these short-time voltage sags are often severe enough and persist long enough to cause the solenoid coils of mechanical contactors and relays to open automatically. When this occurs in a plant there will be parts damage, tool breakage, lost production, etc., all of which cause major disruptions in plant operations even though the supply may be lost only temporarily. Furthermore, new customers added to the area distribution supply substation can also reduce the quality and reliability of the service.

Lower voltage distribution services often tend to be older systems that are susceptible to a more frequent rate of system interruption and failure than higher voltage transmission systems. Underground, lower voltage cable systems are especially susceptible, although some underground cable systems have proven to have high reliability. This reliability tends to be very site- and utility-specific. Installation, maintenance, age, and workmanship quality on cable terminations and splices can all significantly affect the reliability of such systems. Statistically, 138 kV lines may have interruption rates of four or five interruptions per hundred miles per year. On the other hand, distribution lines in the 8–23 kV voltage range may have interruption rates of 100 or more interruptions per hundred miles per year. Thus, the probability of damaging voltage sags is at least 20 times as great on distribution lines as on transmission voltage lines. This difference in probabilities is magnified even more when it is realized that the exposure to voltage sag incidents includes many nearby interconnected lines not necessarily dedicated to the plant supply.

Depending upon circumstances, the capacity available for future expansion from area substations may often be limited, even with or without a single contingency situation occurring. Available capacity may be limited by a transformer, switch, circuit breaker, bus, protective

Copyright The Institute of Electrical and Electronics Engineers, Inc.
Provided by IHS under license with IEEE
No reproduction or networking permitted without license from IHS
Not for Resale

device(s) and supplying cable capacity and, therefore, requires careful evaluation for both normal and abnormal operating conditions. In addition, if firm or first contingency capacity is desired, then the availability of duplicate capacity in the transformer(s), protective device(s), and cables must all be taken into account. Expansion of available capacity in such circumstances to meet first contingency needs may present difficulties due to station configuration and the impact on other customers, especially if available user fault levels are changed as a result of the expansion. This aspect requires very careful consideration so capacity constrained conditions do not develop that will later present significant technical and economical difficulties in meeting increased plant loads.

2.3.3 Plant distribution system reliability analysis

One of the questions often raised during the design of the plant power distribution system is how to make a quantitative comparison of the failure rate and the forced downtime in hours per year for different circuit arrangements, including radial, primary-selective, secondary-selective, simple spot network, and secondary-network circuits. This quantitative comparison could be used in trade-off decisions involving the initial cost versus the failure rate and forced downtime per year. The estimated cost of power interruptions at the various distribution points should be considered in deciding which type circuit arrangement to use. The decisions should be based upon total owning cost over the useful life of the equipment rather than the first cost.

In general, electric power systems are designed on a first contingency basis. The incremental cost to provide such services is typically a relatively small cost as compared to the total facility or plant cost. The risk and cost of a long-term interruption due to system failure far outweighs the added incremental cost required to provide first contingency capacity at the time of installation.

2.3.3.1 Reliability data for electrical equipment

In order to calculate the failure rate and the forced downtime per year, it is necessary to have reliability data on the electric utility supply and each piece of electrical equipment used in the power distribution system. One of the best sources for this type of data are the extensive IEEE surveys on the reliability of electrical equipment in industrial plants and commercial buildings. (See IEEE Std 493-1990.[1]) While this data may be quite useful, it represents a limited data base; therefore, it may not be representative of an individual company's experience. In-house data, if available, may be more appropriate in this analysis.

2.3.3.2 Reliability analysis and total owning cost

Statistical analysis methods involving probability of failure may be used to make calculations of the failure rate and the forced downtime for the power distribution system. The methods and formulas used in these calculations are given in IEEE Std 493-1980. This includes the minimum revenue requirements method for calculating the total owning cost over the useful

[1]Information on references can be found in 2.6.

Copyright The Institute of Electrical and Electronics Engineers, Inc.
Provided by IHS under license with IEEE
No reproduction or networking permitted without license from IHS Not for Resale

life of the equipment. Data and calculations for determining the cost of power interruptions are also given in IEEE Std 493-1990.

2.3.4 Simplicity of operation

Simplicity of operation is very important in the safe and reliable operation and maintenance of the industrial power system. The operation should be as simple as possible to meet system requirements.

2.3.5 Voltage regulation

Poor voltage regulation is detrimental to the life and operation of electrical equipment. Voltage at the utilization equipment must be maintained within equipment tolerance limits under all load conditions, or equipment must be selected to operate safely and efficiently within the voltage limits. Use load-flow studies and motor-starting calculations to verify voltage regulation.

2.3.6 Maintenance

The distribution system should include provisions for predictive and preventive maintenance requirements in the initial design. Accessibility and availability for inspection and repair with safety are important considerations in selecting equipment. Space should be provided for inspection, adjustment, and repair in clean, well-lighted, and temperature-controlled areas.

2.3.7 Flexibility

Flexibility in an electric system means expandability as well as adaptability to changing requirements during the life of the plant. Consideration of the plant voltages, equipment ratings, space for additional equipment, and capacity for increased load must be given serious study.

2.3.8 First cost

While first costs are important, safety, reliability, voltage regulation, maintenance, and the potential for expansion should also be considered in selecting the best from alternate plans.

2.4 Planning guide for the supply and distribution system

The following procedure will guide the engineer in the design of an electric distribution system for an industrial plant. The system designer should also have or acquire knowledge of the plant's processes in order to select the proper system and its components.

2.4.1 Load definition and forecasting

Load definition entails load surveys, demand and diversity analysis, and load characteristic definition. In addition, load forecasting for future requirements must be considered.

Copyright The Institute of Electrical and Electronics Engineers, Inc.
Provided by IHS under license with IEEE
No reproduction or networking permitted without license from IHS
Not for Resale

2.4.1.1 Load survey

Obtain a general plant or facility layout, mark it with the known major loads at various locations, and determine the approximate total plant load in kilowatts or kilovoltamperes. Initially the amount of accurate load data may be limited; therefore, some loads, such as lighting and air conditioning, may be estimated from generalized data. The majority of industrial plant loads are a function of the process equipment, and such information will have to be obtained from process and equipment designers. Since their design is often concurrent with power system design, initial information will be subject to change. It is important, therefore, that there be continuing coordination with the other design disciplines. For example, a change from electric powered to absorption refrigeration or a change from electrostatic to high-energy scrubber air-pollution control can change the power requirements for these devices by several orders of magnitude. The power system load estimates will require continual refinement until job completion.

2.4.1.2 Load requirements and characteristics

The following items define the various requirements and characteristics of the loads and must be determined and defined in the planning process:

a) Load development/build-up schedule
   1) Peak load requirements in kilovoltamperes
   2) Temporary/construction power requirements
   3) Timing
b) Load variations in kilovoltamperes expected during low load (non-productive periods), average load, and peak load conditions.
c) Nature of load in terms of its occurrence
   1) Continuous
   2) Intermittent
   3) Cyclical
   4) Special or unusual loads
   5) Combination of above
d) Expected power factor during low load (nonproductive periods), average load, and peak load periods.
e) Expected daily and annual load factor:

$$\text{Daily} \quad \frac{\text{kWh for 24 h/24 h}}{\text{peak kW during the 24 h}} = \frac{\text{avg. kW}}{\text{peak kW}}$$

$$\text{Annual} \quad \frac{\text{kWh for 8670 h/8670 h}}{\text{peak kW during the 8670 h}} = \frac{\text{avg. kW}}{\text{peak kW}}$$

f) Large motor-starting requirements
   1) Horsepower and other nameplate data
   2) Type (synchronous/induction)
   3) System nominal voltage
   4) Starting requirements
   5) Application

Copyright The Institute of Electrical and Electronics Engineers, Inc.
Provided by IHS under license with IEEE
No reproduction or networking permitted without license from IHS Not for Resale

g) Special or unusual loads such as
   1) Resistance welding
   2) Arc welding
   3) Induction melting
   4) Induction heating
   5) Heat treating
   6) SCR controlled ovens
   7) Variable speed drives (large press drives)
   8) Large power conversion devices
h) Harmonic-generating loads
   1) Converter/inverter drives
   2) Arc discharge lighting
   3) Arc furnaces
   4) Other
i) Special power quality requirements for sensitive or critical loads
   1) Data processing operations
   2) Special machines
   3) Continuous process loads
   4) Others

2.4.1.3 Demand

The sum of the electrical ratings of each piece of equipment will give a total connected, noncoincident load. Because some equipment operates at less than full load and some intermittently, the resultant demand upon the power source is always less than the total connected load, so appropriate load diversity considerations should be considered in the analysis. In general, equipment diversities range from slightly less than 100% for a continuous process to as low as 2% to 5% for certain types of press and welding operations. The diversity expectation associated with each type of equipment should be used to develop a specific, total, actual expected load. An appropriate diversity should then also be applied to each large grouping of equipment and to the entire load to reflect randomness and physical reality, based on experience.

Standard definitions for these load combinations and their ratios have been devised.

2.4.1.3.1 demand: The electric load at the receiving terminals averaged over a specified interval of time.

Note that demand is expressed in kilowatts, kilovoltamperes, amperes, or other suitable units. The interval of time is generally 15 min, 30 min, or 1 h, based on the particular utility's demand metering interval.

2.4.1.3.2 peak load: The maximum load consumed or produced by a unit or group of units in a stated period of time. It may be the maximum instantaneous load or the maximum average load over a designated period of time.

Copyright The Institute of Electrical and Electronics Engineers, Inc.
Provided by IHS under license with IEEE
No reproduction or networking permitted without license from IHS
Not for Resale

2.4.1.3.3 maximum demand: The greatest of all demands that have occurred during a specified period of time such as one-quarter, one-half, or one hour.

Note that for utility billing purposes the period of time is generally one month.

2.4.1.3.4 demand factor: The ratio of the maximum coincident demand of a system, or part of a system, to the total connected load of the system, or part of the system, under consideration. The resultant is always 1 or less and can range from 0.8 to 1 to as low as 0.15 to 0.25 for some plants with very low diversity.

2.4.1.3.5 diversity factor: The ratio of the sum of the individual non-coincident maximum demands of various subdivisions of the system to the maximum demand of the complete system. The diversity factor is always 1 or greater. The (unofficial) term *diversity*, as distinguished from *diversity factor* refers to the percent of time available that a machine, piece of equipment, or facility has its maximum or nominal load or demand (i.e., a 70% diversity means that the device in question operates at its nominal or maximum load level 70% of the time that it is connected and turned on).

2.4.1.3.6 load factor: The ratio of the average load over a designated period of time to the peak load occurring in that period.

Note that although not part of the official definition, the term *load factor* is used by some utilities and others to describe the equivalent number of hours per period the peak or average demand must prevail in order to produce the total energy consumption for the period.

2.4.1.3.7 coincident demand: Any demand that occurs simultaneously with any other demand, also the sum of any set of coincident demands.

Information on these factors for the various loads and groups of loads is useful in designing the system. For example, the sum of the connected loads on a feeder, multiplied by the demand factor of these loads, will give the maximum demand that the feeder must carry. The sum of the individual maximum demands on the circuits associated with a load center or panelboard, divided by the diversity factor of those circuits, will give the maximum demand at the load center and on the circuit supplying it. The sum of the individual maximum demands on the circuits from a transformer, divided by the diversity factor of those circuits, will give the maximum demand on the distribution transformer. The sum of the maximum demand on all distribution transformers, divided by the diversity factor of the transformer loads, will give the maximum demand on their primary feeder. By the use of the proper factors, as outlined, the maximum demands on the various parts of the system from the load circuits to the power source can be estimated. Allowances should also be made for future load expansion in these calculations.

2.4.1.4 Forecasting and planning

Essentially, the load forecasting and planning process involves at least six separate considerations. These are as follows:

a) Impact of nominal load growth over time. Typically, some slight growth in kilowatt demand will be experienced over time. This may be upwards of 1/2 to 1% per year;

Copyright The Institute of Electrical and Electronics Engineers, Inc.
Provided by IHS under license with IEEE
No reproduction or networking permitted without license from IHS Not for Resale

b) Impact of equipment changes due to new equipment installations or modifications that are not part of the product plan, including environmental equipment, new technology applications, or new requirements, such as facility air conditioning or air tempering;

c) New and modified production plans to meet requirements of the future product plan;

d) Additional site development due to new on-site building(s) and added floor space. Typically, a site may be initially developed to a 15–20% building to land ratio, with an allowance for future development of upwards of 30%. Some sites may be constrained for additional development;

e) Impact of gas/oil conversion to electric use for some types of product heating where electric heating may actually be more economical due to inherent process efficiencies;

f) Other types of changes that cannot easily be categorized, such as higher density plant loading, etc.

Every plant should have a current business forecast, for five or six years of production and project requirements, that may be implemented. These, along with longer term projections, should be weighed in terms of their impact upon electric demand. In similar fashion, the prospect of future expanded utilization of the site must be recognized in terms of electric demand. An array of probable plans for capacity can be developed to keep pace with the demands. If the full range of future possibilities is explored both as to size and timing, long-range plans can be developed that can potentially meet demands. While typically forecasted requirements for additional load occur later and are smaller than planned, the process is essential so that constraints, if present, are fully recognized and plans can be developed to resolve them.

Since forecasting offers a degree of certainty, it would be uneconomical to construct or provide capacity that is never used. However, there are opportunities in planning and designing electrical systems for selecting apparatus and arranging these in schemes that minimize the probabilities of early obsolescence due to improper ratings and the need for reconstructing major portions of the system.

2.4.2 Plant distribution systems

Investigate the various types of plant distribution systems and select the system or systems best suited to the requirements of the plant. A variety of basic circuit arrangements is available for industrial plant power distribution. Selection of the best system or combination of systems will depend upon the needs of the manufacturing process. In general, system costs increase with system reliability if component quality is equal. Maximum reliability per unit investment can be achieved by using properly applied and well-designed components.

The first step is the analysis of the manufacturing process to determine its reliability need and potential losses and costs in the event of power interruption. Some plant processes are minimally affected by interruption. Here a simple radial system may be satisfactory. Other plant processes may sustain long-term damage or experience excessive cost by even a brief interruption, therefore, a more complex system with an alternate power source for critical loads may be justified.

--`,,`,,`-`-`,,`,,`,`,,`---

Copyright The Institute of Electrical and Electronics Engineers, Inc.
Provided by IHS under license with IEEE
No reproduction or networking permitted without license from IHS
Not for Resale

Circuit redundancy may be needed in continuous-process industries to allow equipment maintenance. Although the reliability of electric power distribution equipment is high, optimum reliability and safety of operation still requires routine maintenance. A system that cannot be maintained because of the need to serve a continuous process is improperly designed.

Far more can be accomplished by the proper selection of the circuit arrangement than by economizing on equipment details. Cost reductions should never be made at the sacrifice of safety and performance by using inferior apparatus. Reductions should be obtained by using a less expensive distribution system with some sacrifice in reserve capacity and reliability.

2.4.2.1 Simple radial system

(See figure 2-1.) Distribution is at the utilization voltage. A single primary service and distribution transformer supply all the feeders. There is no duplication of equipment. System investment is the lowest of all circuit arrangements.

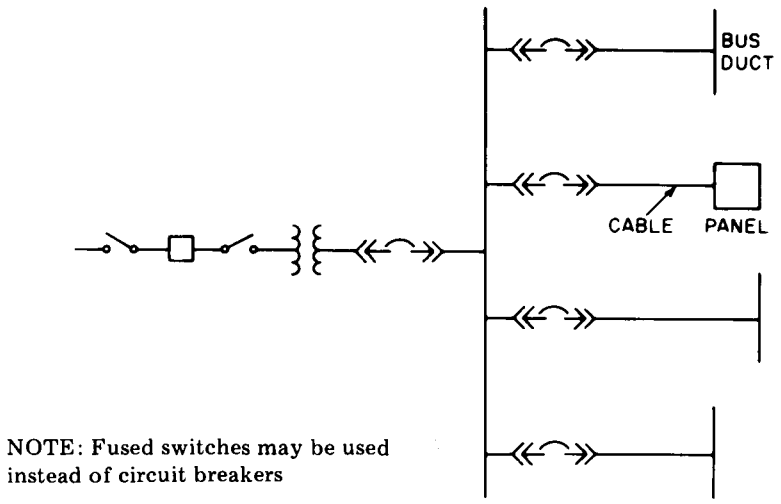

Figure 2-1—Simple radial system

Operation and expansion are simple. When quality components and appropriate ratings are used reliability is high. Loss of a cable, primary supply, or transformer will cut off service. Equipment must be shut down to perform routine maintenance and servicing.

This system is satisfactory for small industrial installations where process allows sufficient down time for adequate maintenance and the plant can be supplied by a single transformer.

Copyright The Institute of Electrical and Electronics Engineers, Inc.
Provided by IHS under license with IEEE
No reproduction or networking permitted without license from IHS Not for Resale

2.4.2.2 Expanded radial system

(See figure 2-2.) The advantages of the simple radial system may be applied to larger loads by using an expanded radial primary distribution system to supply a number of unit substations located near the load, which in turn supply the load through radial secondary systems.

The advantages and disadvantages are the same as those described for the simple radial system.

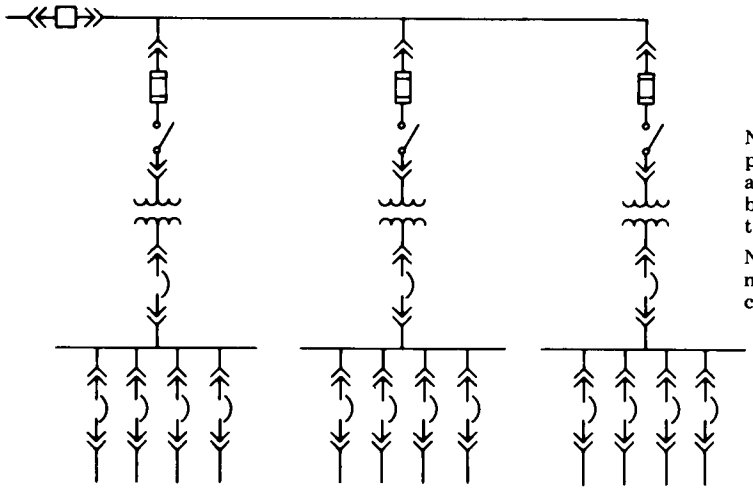

Figure 2-2—Expanded radial system

2.4.2.3 Primary selective system

(See figure 2-3.) Protection against loss of a primary supply can be gained through use of a primary selective system. Each unit substation is connected to two separate primary feeders through switching equipment to provide a normal and an alternate source. Upon failure of the normal source, the distribution transformer is switched to the alternate source. Switching can be either manual or automatic, but there will be an interruption until load is transferred to the alternate source.

If the two sources can be paralleled during switching, some maintenance of primary cable and switching equipment, in certain configurations, may be performed with little or no interruption of service. Cost is somewhat higher than a radial system because of duplication of primary cable and switchgear.

2.4.2.4 Primary loop system

(See figure 2-4.) A primary loop system offers improved reliability and service continuity in comparison to a radial system. In typical loop systems, power is supplied continuously from two sources at the ends of the loop. Such a system, if properly designed and operated, can

Copyright The Institute of Electrical and Electronics Engineers, Inc.
Provided by IHS under license with IEEE
No reproduction or networking permitted without license from IHS
Not for Resale

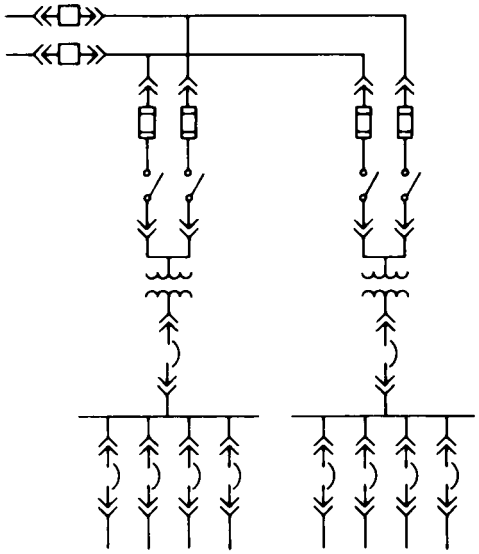

NOTE: If non-draw-out fused switches are used, the fuse should be on the load side of the switch.



NOTE: An alternate arrangement uses a primary selector switch with a single fused interrupter switch (which may not have certified current-switching ability).

Figure 2-3—Primary selective system

quickly recover from a single cable fault with no continuous loss of power to utilization equipment. It is unlikely that a fault will occur within the area of the closely coupled isolation devices and the bus to the fuse protecting the transformer.

A second important feature of loop systems is that a section of cable may be isolated from the loop for repair or maintenance while other parts of the system are still functioning. However, it is important to analyze the isolation provided with this arrangement.

Since electrical power can flow in both directions in a loop system, it is essential that detailed operating instructions be prepared and followed. These instructions must take into account the fact that the industrial facility may not always be staffed with trained electrical personnel on a 24-hour basis. Additionally, if the two supply points for the loop originate from different buses, the design must consider available short-circuit capacity from both buses, the ability of both buses to supply the total load, and the possibility of a flow of current from one bus to the other bus over the loop.

2.4.2.4.1 Closed-loop operation

To realize optimum service reliability of a primary loop system, the system should be operated with all series switches in figure 2-4 closed (closed-loop mode). When designing a system that is expected to be operated in the closed-loop mode, circuit breakers typically are selected in lieu of fused or nonfused isolation switches.

When the loop switches consist of circuit breakers with interconnected directional overcurrent or pilot wire relays, a cable fault within the loop may be automatically isolated without

Copyright The Institute of Electrical and Electronics Engineers, Inc.
Provided by IHS under license with IEEE
No reproduction or networking permitted without license from IHS Not for Resale

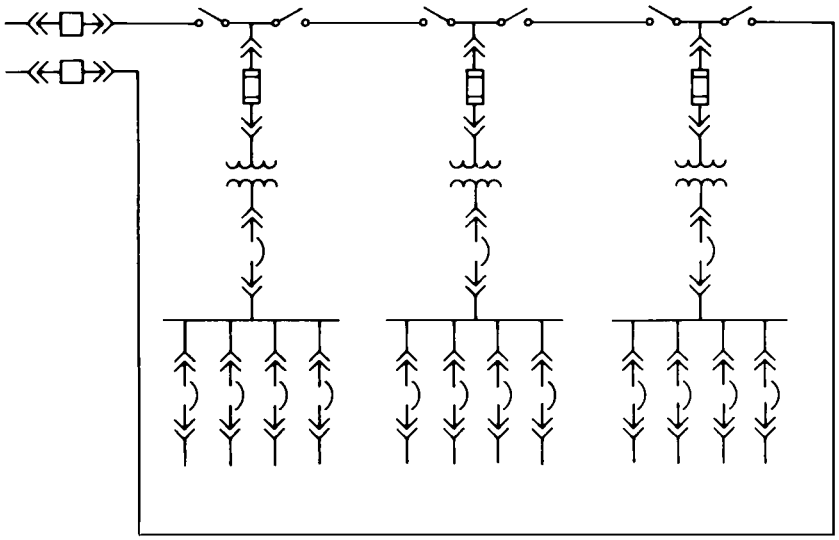

Figure 2-4—Primary loop system

loss of transformer capacity. No loss of power will occur, although the system will experience a voltage dip until the circuit breakers clear the fault. Whenever a section of the loop is faulted, either in the cable of the loop or in the taps from the loop, both circuit breakers feeding that section must trip. If the taps are taken from nonadjacent sections, then the two circuit breakers feeding the portion of the loop between the taps must trip, de-energizing the entire section. When a circuit breaker trips and is not remotely indicated or alarmed, a portion of the loop may unknowingly remain out of service for an extended period of time even though all loads remain energized. To prevent this from happening, an alarm point derived from the overcurrent detection system at both ends of the loop should be installed.

2.4.2.4.2 Open-loop operation

A primary loop system may be operated with one of the series switches in figure 2-4 open. Fused or non-fused isolation switches, or circuit breakers, may be used in this open-loop operation. A disadvantage of open-loop operation is that a cable failure will result in the temporary loss of service to some portion of the system.

2.4.2.4.3 Fault isolation

One method for locating a fault in a loop system is the dangerous practice of isolating a section of the loop and then re-energizing the power source. If the system trips again, another section is isolated and the power is re-applied. Such action is repeated until the fault is isolated. This method of fault location is not recommended. It is unsafe practice and may cause

Copyright The Institute of Electrical and Electronics Engineers, Inc.
Provided by IHS under license with IEEE
No reproduction or networking permitted without license from IHS
Not for Resale

equipment failure as a result of the stress placed on system components and cable insulation. The reclosing of any power protection device into a known fault in order to locate the faulty equipment, or to restore the system power without ascertaining the problem, is not recommended.

2.4.2.4.4 Primary loop system economics

An initial cost saving may be achieved by designing a loop system with isolation switches instead of circuit breakers. The loop system may be designed with non-fused switches for the greatest initial cost savings. However, the selection of non-fused switches for isolating an open loop system provides no overcurrent protection to individual sections of the loop, nor a reduction of the faulted section. Some portion of the loop will lose power whenever any fault occurs.

Many times fused isolation switches will be applied in lieu of circuit breakers in a loop system. Since it is not possible to selectively coordinate such a system for faults on a closed loop, the loop should be operated in the open loop mode. The use of fused switches also introduces the potential for single-phasing in the system. Consequences of single-phasing may include motor failure, loss of one-third of the lighting, and partial voltage to an additional one-third of the lighting. Phase failure protection systems are available. If the need for a form of single-phasing protection is established, some of the cost savings of using fused switches over circuit breakers is lost.

One possible disadvantage of the system in figure 2-4 is that there is no disconnecting means ahead of the fuse protecting the transformer. At an additional cost, a disconnect switch would add convenience for the maintenance of the equipment, and if a problem should occur with the transformer it can be isolated without opening the loop. Good safety practice for industrial installations will almost always dictate the inclusion of such a switch-fuse combination or circuit breaker ahead of the transformer.

The economics of the variations in design of primary loop systems can be found in Chapter 16.

2.4.2.5 Secondary selective system

[See figure 2-5(a)]. If pairs of substations are connected through a secondary tie circuit breaker, the result is a secondary selective system. If the primary feeder or transformer fails, supply is maintained through the secondary tie circuit breaker. The tie circuit breaker can be operated in a normally opened or a normally closed position. If operated opened, the supply is maintained by a manual or automatic opening of the affected transformer's circuit breaker followed by a closing of the tie circuit breaker. If the tie is operated closed, the supply is maintained by the automatic opening of the affected transformer circuit breaker (by reverse power or reverse current detection); automatic reclosing upon restoration of the faulted circuit is recommended. In case of the normally opened tie circuit breaker, voltage is maintained to the unaffected transformer's circuits. In the case of the normally closed tie, a voltage depression occurs on the bus until the affected transformer's circuit breaker opens.

Copyright The Institute of Electrical and Electronics Engineers, Inc.
Provided by IHS under license with IEEE
No reproduction or networking permitted without license from IHS Not for Resale

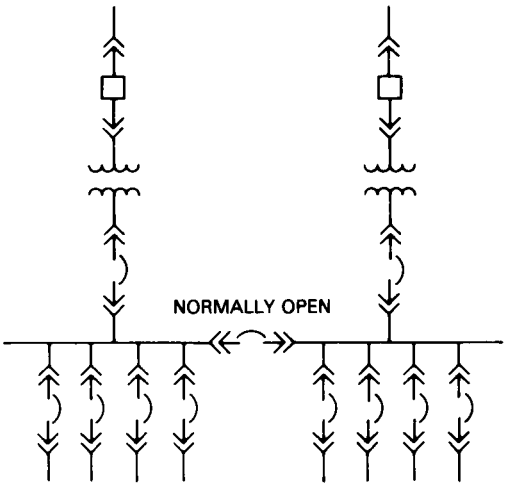

(a) Secondary selective system

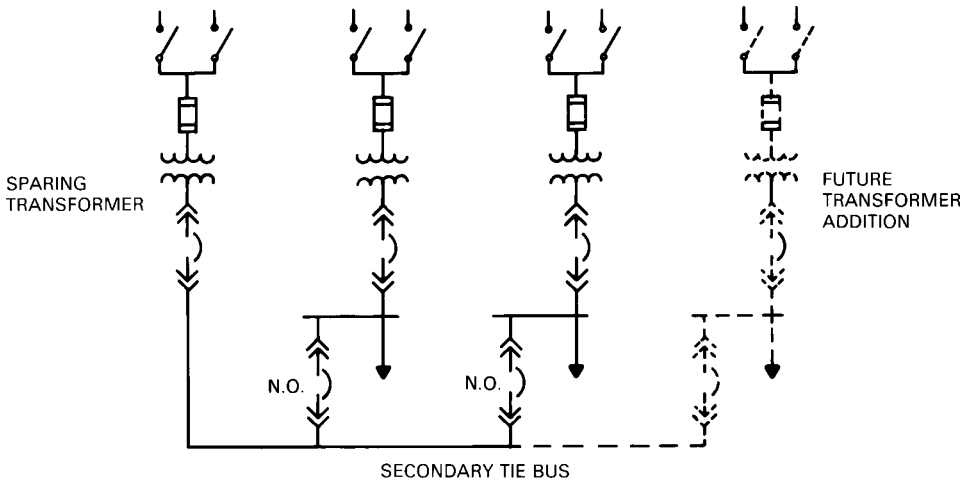

(b) Sparing transformer scheme

Figure 2-5—Typical configurations load center substations

Normally the systems operate as radial systems. Maintenance of primary feeders, transformer, and main secondary disconnecting means is possible with only momentary power interruption, or no interruption if the stations can be operated in parallel during switching, although complete station maintenance will require a shutdown. With the loss of one primary circuit or transformer, the total substation load may be supplied by one transformer. To allow for this condition, one (or a combination) of the following should be considered:

Copyright The Institute of Electrical and Electronics Engineers, Inc.
Provided by IHS under license with IEEE
No reproduction or networking permitted without license from IHS
Not for Resale

a) Oversizing both transformers so that one transformer can carry the total load;
b) Providing forced-air cooling to the transformer in service for the emergency period;
c) Shedding nonessential load for the emergency period;
d) Using the temporary overload capacity in the transformer and accepting the loss of transformer life.

A distributed secondary selective system has pairs of unit substations in different locations connected by a tie cable and a normally open disconnecting means in each substation. The designer should balance the cost of the additional tie disconnecting means and the tie cable against the cost advantage of putting the unit stations nearer the load center.

The secondary selective system may be combined with the primary selective system to provide a high degree of reliability. This reliability is purchased with additional investment and addition of some operating complexity.

In figure 2-5(a), while adhering to the *firm* capacity concept, the total load allowed to the substation will be equal to or less than the capability of one transformer or one load side overcurrent device, whichever is the most restrictive.

The sparing transformer scheme offers some particular advantages for achieving first contingency capacity in a cost-effective manner in the distribution system. Available transformer capacity is utilized at a higher level than in a simple redundant configuration (where utilization is 50%), and transformers can be readily added to existing substations as the need arises (if physical space and load requirements allow). In the sparing case [figure 2-5 (b)] the first contingency capacity is equal to (*n*-1) transformers or load side overcurrent devices. This scheme has been successfully used in industry, although there may occasionally be some personnel reluctant to accept it since the sparing transformer typically remains essentially unloaded, and the idea of an unloaded unit may seem to represent nonutilization of equipment.

Operations, protection, etc., for configurations shown by figure 2-5(a) and (b) are the same with two exceptions:

a) Automatic transfer initiated by loss of voltage on a low side bus is not applicable in the sparing transformer scheme;
b) Feeder overcurrent device fault duty requirements are almost always greater in the double-end scheme due to the additional motor fault current contribution during the emergency condition when the tie is closed.

2.4.2.6 Secondary spot network

(See figure 2-6.) In this system two or more distribution transformers are each supplied from a separate primary distribution feeder. The secondaries of the transformers are connected in parallel through a special type of device, called a network protector, to a secondary bus. Radial secondary feeders are tapped from the secondary bus to supply utilization equipment.

If a primary feeder fails, or a fault occurs on a primary feeder or distribution transformer, the other transformers start to feed back through the network protector on the faulted circuit. This

Copyright The Institute of Electrical and Electronics Engineers, Inc.
Provided by IHS under license with IEEE
No reproduction or networking permitted without license from IHS Not for Resale

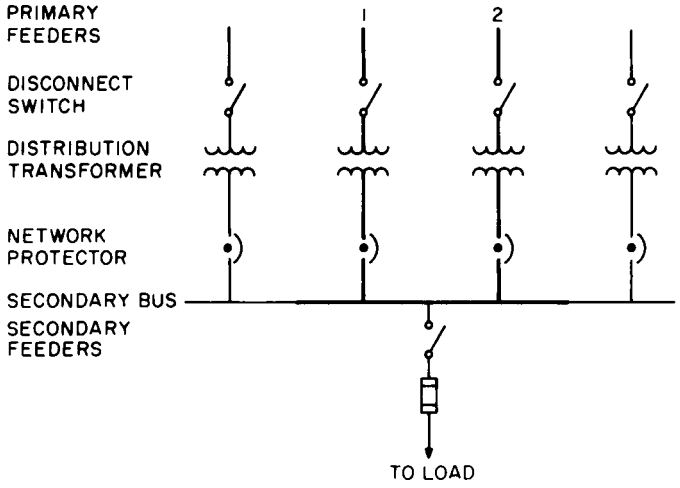

Figure 2-6—Secondary spot network

reverse power causes the network protector to open and disconnect the supply circuit from the secondary bus. The network protector operates so fast that there is a minimal exposure of secondary equipment to the associated voltage drop.

The secondary spot network is the most reliable power supply for large loads. A power interruption can only occur when there is a simultaneous failure of all primary feeders or when a fault occurs on the secondary bus. There are no momentary interruptions caused by the operation of the transfer switches that occur on primary selective, secondary selective, or loop systems. Voltage sags caused by large transient loads are substantially reduced.

Networks are expensive because of the extra cost of the network protector and duplication of transformer capacity. In addition, each transformer connected in parallel increases the short-circuit-current capacity and may increase the duty ratings of the secondary equipment. This scheme is used only in low-voltage applications with a very high load density. Also, it requires a special bus construction to reduce the potential of arcing fault escalation.

The packaged protector used by the utilities and preferred by some industrial users is not in itself adequately protected to meet the National Electrical Code (NEC) (ANSI/NFPA 70-1993) requirements, and also should not be regarded as equivalent to draw-out switchgear from a safety standpoint. Either supplementary protection should be added or, preferably, standard switchgear should be used, suitable for the purpose with proper protective relaying.

2.4.2.7 Ring bus

(See figure 2-7.) The ring bus offers the advantage of automatically isolating a fault and restoring service. Should a fault occur in Source 1, Devices A and D would operate to isolate

Copyright The Institute of Electrical and Electronics Engineers, Inc.
Provided by IHS under license with IEEE
No reproduction or networking permitted without license from IHS
Not for Resale

the fault while Source 2 would feed the loads. A fault anywhere in the ring results in two interrupting devices opening to isolate the fault.

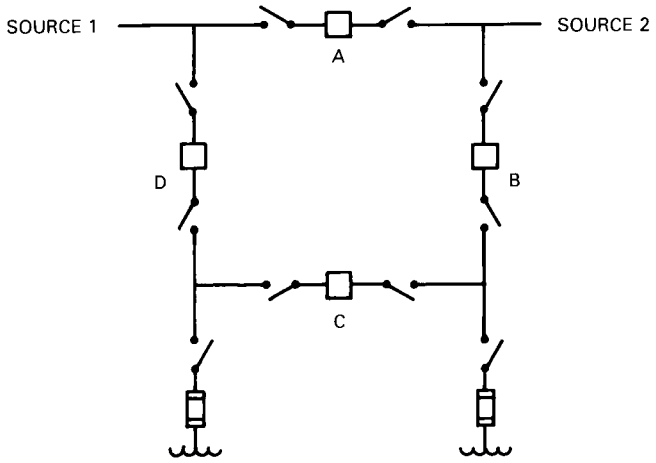

Figure 2-7—Ring bus system

The ring bus scheme is often considered where there are two (2) or more medium voltage (i.e., 4.16, 4.8, or 13.2/13.8 kV) distribution services to the facility and the utmost in flexibility and switching options are desired. Care must be taken that allowable fault duties are not exceeded with closed bus tie breaker operation in this scheme.

Manual isolating switches are installed on each side of the automatic device. This allows maintenance to be performed safely and without interruption of service. This will also allow the system to be expanded without interruption.

2.4.3 Equipment locations

The engineer, in cooperation with process personnel, selects locations for distribution transformers and major utilization voltage switching centers. In general, the closer the transformer to the load center of the area served, the lower the distribution system cost.

2.4.4 Plant utilization voltage

Select the best plant utilization voltage for the various system voltage levels. The most common utilization voltage in United States industrial facilities is 480 V. Other voltage levels depend upon motor rating and size, utility voltage available, total load served, potential expansion requirements, voltage regulation, and cost. Chapter 3 is a guide for correct voltage selection. The system should be capable of providing power to all equipment within published voltage limits under all normal operating conditions and meeting possible future loads. Additional voltage considerations will include flicker restrictions created due to large motor

Copyright The Institute of Electrical and Electronics Engineers, Inc.
Provided by IHS under license with IEEE
No reproduction or networking permitted without license from IHS Not for Resale

starting and the subsequent voltage drop during starting and restrictions placed on the user by the utility to prevent disturbances to their system when starting the user's large motors. Particular care should be taken when served from utility area distribution substations, since these are typically higher impedance systems having lower fault currents. The starting of large motors or other short-circuit type loads (i.e., welding, arc furnaces, etc.) can result in a short-term voltage sag or fluctuation elsewhere on the feeder.

2.4.5 Primary utility supply service

When it is anticipated that a new service or change in the existing utility supply is required, sufficient time should be allowed in the planning cycle to permit proper negotiations with the utility. The negotiations with the utility should precede the time scheduled for the specification, procurement, manufacture, installation of facilities, and commissioning. The negotiations with the utility should culminate in a contract so that utility engineering, design, and construction may begin in parallel with the customers efforts.

The industrial facility may be required to pay the cost of the change in service or the additional utility facilities.

It should be recognized that utility policy may require a contract for service/facilities before any engineering, right-of-way acquisition, environmental impact statements, or filing of permit applications.

Experience indicates that a utility may require 18 to 24 months to install a new substation or distribution/transmission line. This schedule usually begins after the contract is executed.

Refer to Chapter 15 for additional utility planning and design criteria required to provide an industrial primary supply substation.

At every step, whether for an all-new plant or for an existing plant, plans for the future are absolutely necessary. When this is done properly, subsequent increases in plant load can be accommodated by adding capacity to the initial system instead of necessitating a redesign of the whole primary system. In short, no plant primary supply and distribution system should ever be designed in a manner that will make it difficult or impossible to expand its capacity.

More important than the timing of capital investment is the need to permanently allocate space for installing power supply and distribution apparatus that may be required for the ultimate plant development at the site. Thus, it is clear that an estimate of the ultimate demand is necessary in order to establish the number and nature of future required facilities.

Experience has shown that when insufficient space is allocated for expanding either the high-voltage outdoor substation or the indoor main distribution switchgear, there is a tendency to compromise safety, reliability, and convenience. The latter usually translates into a depreciation of reliability because space for equipment removal or maintenance, or both, is sacrificed. Therefore, it usually becomes necessary to remove additional equipment in order to repair or replace another piece of apparatus that has failed.

Copyright The Institute of Electrical and Electronics Engineers, Inc.
Provided by IHS under license with IEEE
No reproduction or networking permitted without license from IHS
Not for Resale

Figure 2-8 is presented to illustrate some of the considerations that are a necessary part of planning the power supply. Although the example suggests a totally new plant, similar forward planning is equally necessary at an existing facility before the demand exceeds the firm supply capacity.

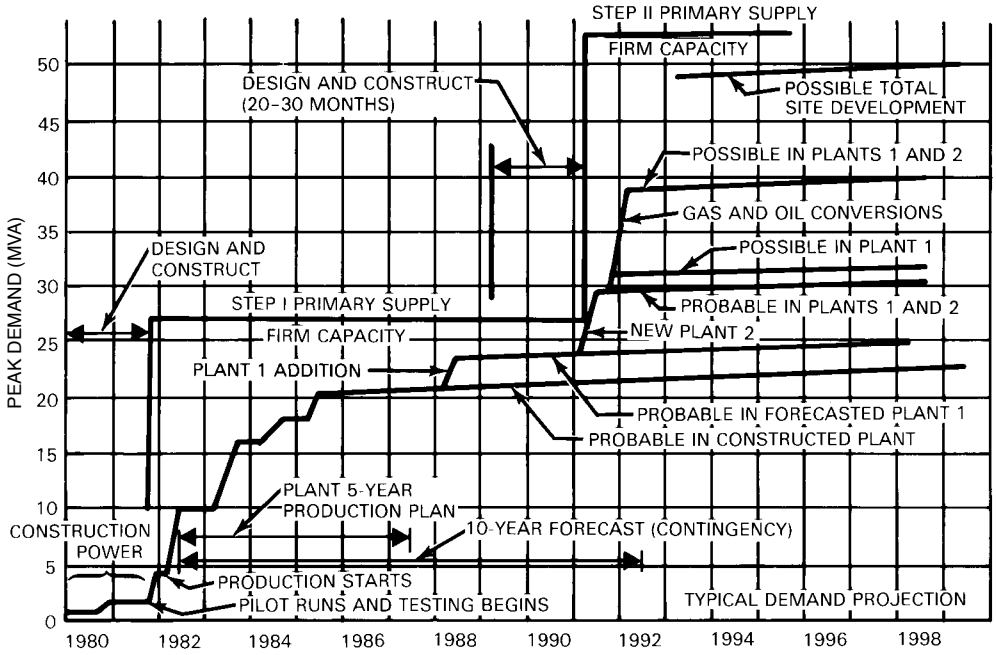

Figure 2-8—Power supply planning considerations

By using various combinations of systems, the engineer can design a system to meet the load requirements. It may be necessary to design a system that can be expanded for future growth. As an example, the engineer can start with a radial system supplied at 13.8 kV from the utility. (See figure 2-1.) As the load at the site grows, the engineer can convert to a double-ended substation, such as is shown in figure 2-5(a). At the time of a major expansion and when the load requires additional power, the engineer can go to a ring bus. (See figure 2-7.) This ring bus, through transformation, can supply an intermediate distribution system at the original utility voltage of 13.8 kV. With proper planning and system selection, the engineer can have enough flexibility to meet any load requirement.

Selecting the number of main distribution buses and the method of interconnecting them depends upon many factors such as the sizes of the immediate and ultimate plant loads, the primary distribution voltage, the availability of suitable supply lines, and other factors relating to the utility system.

Figure 2-9 is presented for the purpose of illustrating a number of main primary substation configurations that can be considered for use. Figure 2-9 demonstrates that there are many ways to develop the main primary distribution configuration while meeting specific requirements or constraints.

Copyright The Institute of Electrical and Electronics Engineers, Inc.
Provided by IHS under license with IEEE
No reproduction or networking permitted without license from IHS
Not for Resale

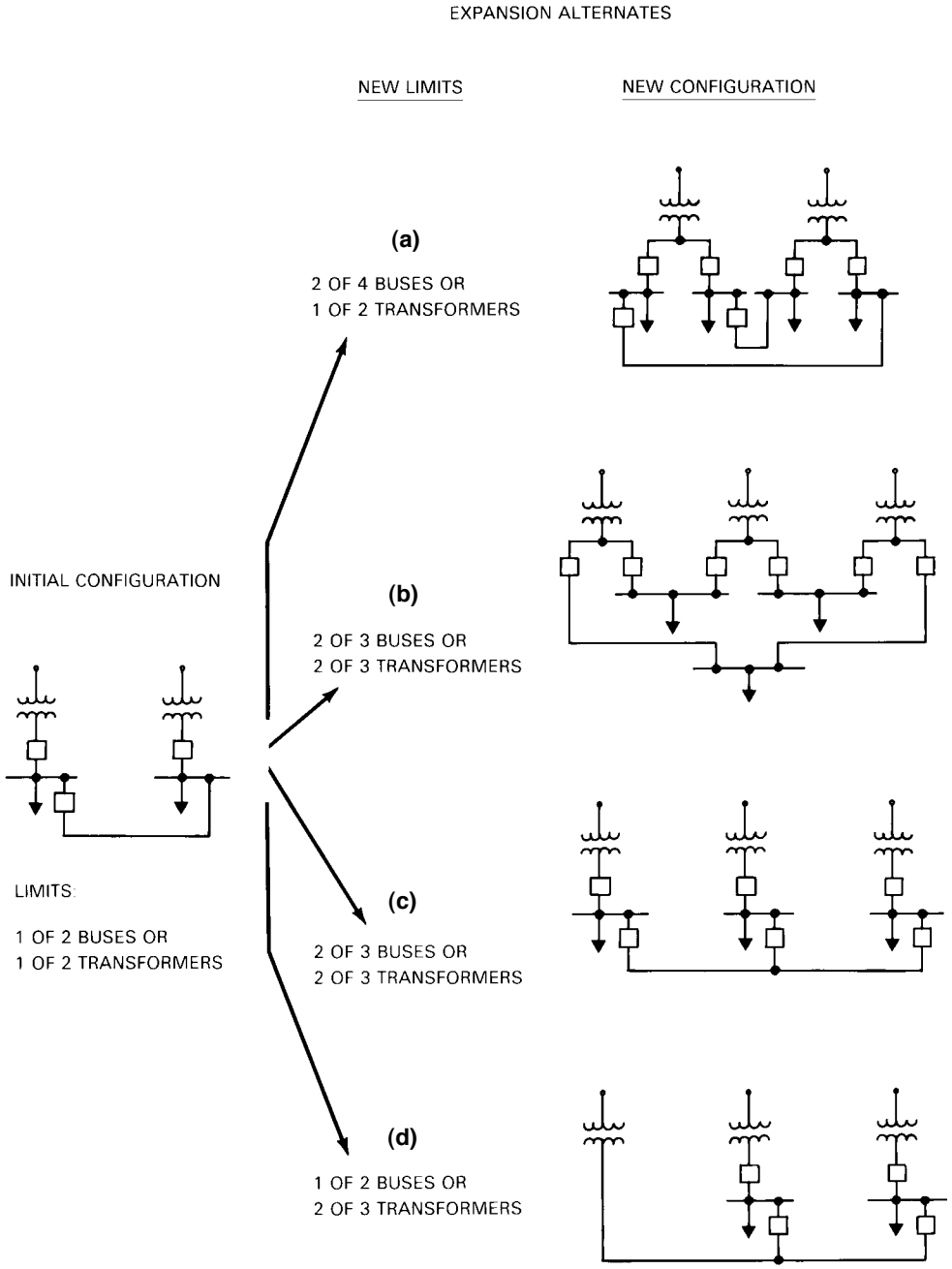

Figure 2-9—Typical main primary distribution arrangements

Copyright The Institute of Electrical and Electronics Engineers, Inc.
Provided by IHS under license with IEEE
No reproduction or networking permitted without license from IHS
Not for Resale

The two-bus arrangement (figure 2-9), shown as the initial configuration, represents the lowest cost arrangement. To maximize the firm capability of this arrangement requires that the thermal ratings of the supply (transformer), the main circuit breaker, and the switchgear main bus bar be equal. While later discussions will more thoroughly consider specific ratings, precisely matching all of these thermal capacities is extremely difficult and is rarely achieved. Therefore, the usual occurrence is one in which either the supply transformer or the switchgear, the main circuit breaker, or the bus bars are limiting.

Figure 2-9 suggests that the initial sizing of switchgear should be compatible with future expansion. *Future* in this case is intended to reflect the useful life of well-maintained switchgear.

Figure 2-9(a) depicts one method for expanding the system where transformer size is increased and initial switchgear is augmented. This method, when used to increase the useful life of undersized switchgear, may require operation under somewhat restrictive conditions so the circuit breaker short-circuit ratings are not exceeded.

Where a third transformer (supply) is possible and feasible, there are three widely used schemes as shown by figure 2-9(b), (c), and (d). The sparing transformer scheme of figure 2-9(d) is usually the least attractive because switchgear limits are unchanged. Figure 2-9(c) represents the most commonly installed scheme, but this scheme is nearly always capacity-limited by switchgear even when current-limiting reactors are installed in bus tie circuits. Even so, 2-9(c) is usually the preferred configuration because reactive losses are incurred only when the bus loading is unbalanced and during emergency periods. Figure 2-9(b) is more costly than either 2-9(c) or 2-9(d), and its capacity is almost always limited by the transformer rating, particularly when duplex reactors are installed between transformers and main disconnecting devices to limit circuit breaker short-circuit duty.

Substation expansion is also possible by exchanging initially installed transformers for larger units. This is rarely done in instances where the plant owns the supply transformers. However, when transformers are supplied by the utility and when the initial transformers can be utilized by the utility, it is frequently more economical to exchange units than to add a third unit and all of the associated switching apparatus. Usually when a utility exchanges transformers, the customer receives credit for the retired equipment on the basis of replacement cost new less depreciation, although this is also subject to negotiation if there are no clear utility policies. Therefore, it may be financially attractive to begin a supply substation with two 15/20/25 MVA units and later exchange them for two 30/40/50 MVA units. However, in order to be technically feasible, the main plant primary switchgear must be rated to handle the higher load current as well as the higher short-circuit duty due to the larger transformers. The station must originally be designed for such additions, including consideration for needed clearances, structural steel requirements, foundations, and equipment installations and removal spaces.

When expanding an existing plant, determine if all the existing equipment is adequate by checking ratings: voltage, interrupting capacity, short-circuit withstand, momentary capability, switch close and latch, and continuous current. Selective coordination of protective

Copyright The Institute of Electrical and Electronics Engineers, Inc.
Provided by IHS under license with IEEE
No reproduction or networking permitted without license from IHS Not for Resale

device trip characteristics may require modifications to the existing relaying/fusing to coordinate with the new design and ensure that appropriate margins of safety are maintained.

2.4.6 Generation

Determine whether parallel, standby, or emergency plant generation will be included. Technical and tariff issues must be included in the initial planning so as to prevent having to modify or reconstruct certain parts of the plant supply and distribution system to accommodate generation.

2.4.6.1 Technical issues

The following technical electrical issues must be reviewed during the planning stages:

a) Number of generators and ratings
   1) Generator's output in kilovoltamperes
   2) Generator's voltage
   3) Generator's rated full-load current
   4) Type of generator
   5) Generator's rated power factor
   6) Generator's reactances on generator kilovoltamperes base, including synchronous, transient, and subtransient reactances and time constants to produce generator decrement curves for protective coordination
   7) Generator's transformer requirements, including size/rating in kilovoltamperes, impedance, and base connection
   8) Relaying and protection of generator
b) Metering
c) Voltage regulation
d) Synchronizing
e) Grounding
f) Cost
g) Operation and loading of the generator on a scheduled basis
h) Maintenance requirements
i) Largest motor to be started with generator running
j) Available fault current (three-phase and single-phase to ground) from the generator to the plant system
k) Utility's interconnection and parallel operating conditions including relaying and protective-device requirements

Consideration should be given to the load imposed on the generator when groups of motors are started instead of one large motor. These groups of motors may be arranged for staggered starting so that a smaller generator can be specified.

The complete design must be coordinated with the utility if parallel operation with the utility's system is anticipated. With some utility tariffs, it may be advantageous to utilize plant generation to decrease plant base load or to shave peak load.

Copyright The Institute of Electrical and Electronics Engineers, Inc.
Provided by IHS under license with IEEE
No reproduction or networking permitted without license from IHS
Not for Resale

2.4.6.2 Rate and financial considerations

The following conditions must be evaluated carefully since the installation of parallel generation will affect the economics of operation and the user's substation design:

a) Utility's charges, including kilowatt and kilovoltampere demand (based on maximum demand), variable or kilowatthour charges, such as fuel (usually in cents/kWh), and other associated costs, such as power-factor metering. These charges are usually determined from an analysis of the approved, applicable, utility rate schedules. The availability of special or incentive rates should also be investigated (i.e., deferred cogeneration, economic development, peak shaving, and interruptible rates);
b) Utility's cogeneration supplemental power, back-up, and maintenance tariffs;
c) Conditions for electric load displacement by the customer and for customer-supplied capacity (including dispatching requirements) and energy delivery to the utility;
d) Customer's load relative to the cogeneration size, especially during peak and minimum (nonproductive) load periods.

Of particular significance are the following:

a) Planned means of connecting the cogenerator to the user's system;
b) Subsequent impact of fault current from the unit on the user's system;
c) Utility's special relaying and protective-device requirements. Particular care should be exercised if automatic recalling on generator operation is considered in order to avoid creating any potential unsafe or dangerous conditions.

2.4.7 Single-line diagram

A complete one-line or single-line diagram, in conjunction with a physical plan of the installation, should present sufficient data to plan and evaluate the electric power system. Figures 4-10 and 5-19 in Chapters 4 and 5 represent single-line diagrams containing some of the information required for system-protection design and fault-current analysis.

The basic function of the single-line diagram is to convey information concerning the power system, including the overall scheme as well as details of each element of the plant supply and distribution system. Symbols commonly used in single-line diagrams are defined in IEEE Std 315-1975.

The following items should be shown on the single-line diagram or other documentation.

2.4.7.1 Utility supply system

a) Utility line supply voltage (34.5/46/115/138/161 kV, etc.);
b) High-voltage protective devices and switches, including circuit switchers, motor-operated air break switches, nonload break switches, etc. The nominal operating mode of all such devices should be indicated (i.e., NO/NC for normally open/normally closed, respectively), together with the nominal continuous-current ratings and interrupting or momentary closing and latching short-circuit current ratings;

--`,,`,,`-`-`,,`,,`,`,,`---
Copyright The Institute of Electrical and Electronics Engineers, Inc.
Provided by IHS under license with IEEE
No reproduction or networking permitted without license from IHS Not for Resale

c) Maximum and minimum three-phase and phase-to-ground available short-circuit duty (megavoltamperes and symmetrical current), and system equivalent impedances (three-phase and single-phase-to-ground, indicating base used—typically 100 MVA);
d) Types of relays, ANSI identification, relay location, and calibration settings for all high-voltage protective devices;
e) Primary supply cables (if used) including size, capacity, shielding, insulation, installation design (duct banks/direct burial, etc.), number of conductors, nominal ampacity (amperes and kilovoltamperes/megavoltamperes) and bases, etc.

2.4.7.2 Primary utility supply transformers

a) Nameplate rating(s) (kilovoltamperes and kilovolts) and temperature rise;
b) Rating in kilovoltamperes for continuous summer duty;
c) High-voltage winding voltage taps and winding connection (delta/wye);
d) Low-voltage winding voltage taps and winding connection (delta/wye);
e) Load tap changer—voltage range and percent steps;
f) In-line voltage regulator (if separate) ratings;
g) Impedance and kilovoltamperes base;
h) Grounding scheme and ohmic value of neutral resistor(s) if used; show connections;
i) Surge arrestors and capacitors (show switching if switched), and connections;
j) Metering of utility supply;
k) Primary protective devices when primary supply is supplied from distribution system. Include ratings (megavoltamperes, amperes), nominal operational mode, and protective devices with coordination settings.

2.4.7.3 Incoming primary: Cable or bus to main switchgear from supply transformers

a) Indicate type (bus, cable, etc.), type of insulation, continuous-current rating (ampacity), physical support, and installation design (underground cable in duct bank, bus, overhead cable in tray, tray size, etc.);
b) Nominal maximum current rating(s) and basis.

2.4.7.4 Main switchgear

a) Manufacturer(s), type, model, current rating, megavoltamperes class, symmetrical interrupting current rating, and asymmetrical momentary/closing-and-latching current rating for main, tie, and feeder devices;
b) Indicate nominal operational mode for all switchgear and disconnecting devices;
c) Ampacity of bus.

2.4.7.5 Primary feeder cables

a) Number of feeders;
b) Cable insulation and type;
c) Installation design (conduit, Interlocked Armored Cable [IAC] in tray, size of tray, number of cables in tray, etc.);
d) Nominal maximum current rating and basis;

--`,,`,,`-`-`,,`,,`,`,,`---

Copyright The Institute of Electrical and Electronics Engineers, Inc.
Provided by IHS under license with IEEE
No reproduction or networking permitted without license from IHS
Not for Resale

e) Cable size and number of cables per phase;
f) Year of installation.

2.4.7.6 Primary distribution system

a) Include primary switching, fusing, other protective devices, transformer connections, ratings, system grounding, nominal loading (kilovoltamperes and amperes), and low-voltage protective-device arrangement for unit substation and load centers. Indicate each protective device's continuous-current rating, symmetrical interrupting current and asymmetrical momentary or closing-and-latching current rating, manufacturer, type, and model identification. Indicate tap settings on all primary transformers;
b) Indicate bus ratings in amperes;
c) Identify major load centers and indicate general electrical configuration;
d) Identify nominal loads in kilovoltamperes and amperes on unit substations, transformers, and load centers;
e) Identify and show all major medium-voltage loads and motors, including associated transformers and all other major, significant and identifiable loads, such as motor loads on motor control centers, large press and other motor or drive loads, dedicated lighting loads, arc furnaces, induction furnaces, special purpose loads, such as data processing and computer applications, welding loads, powerhouse loads, including waste treatment, air compressor loads, etc.

2.4.7.7 Relay and protective device coordination

The relay coordination and protective-device settings should be on separate documentation that forms a part of the single-line diagram. Show for utility medium-voltage supply, primary distribution system, and low-voltage or secondary distribution system.

2.4.7.8 Normal operation mode of switching and isolation devices

Indicate normal operation mode of all switching, isolation, and protective devices.

2.4.7.9 Future space considerations

Primary main switchgear. Indicate space for expansion of primary feeder overcurrent devices in switch house or available cubicles for such expansion.

2.4.7.10 Running (operating) motor loads

An integral part of the single-line diagram is the summary of running motor loads in the plant. This information is important for short-circuit and protective-device coordination.

At a minimum, the following information should be obtained:

a) By size category for each 480 V transformer (less than 50 hp; 50 hp and larger);

Copyright The Institute of Electrical and Electronics Engineers, Inc.
Provided by IHS under license with IEEE
No reproduction or networking permitted without license from IHS Not for Resale

b) List individual medium-voltage motors (e.g., 2400 V, 4160 V, 4800 V, 6900 V and 13800 V systems), including horsepower/kilowatt, revolutions per minute, and type (induction, synchronous);
c) Include powerhouse motors (chillers, compressors, etc.);
d) Indicate all solid-state/SCR-controlled variable-speed ac/dc-converter motor drives. (These may not contribute to fault current.)

2.4.7.11 Capacitor banks

Medium- and low-voltage capacitor bank installations should be shown on the single-line diagram together with connections and switching configuration and ratings (voltage, kilovar, etc.).

a) Location and rating of each capacitor bank installed;
b) Switched or permanently connected? If switched, design criteria (if available), and details on control scheme;
c) Capacitors status (connected?/working?).

The actual drawing should be kept as simple as possible. It is a schematic diagram and need not show geographical relationship. Duplication should be avoided.

2.4.8 Short-circuit analysis

Calculate short-circuit currents available at all system components. Chapter 4 provides a detailed guide to making these calculations. A short-circuit evaluation should always be performed if changes are made to the primary utility supply system that may affect available fault current. Such changes can include, but are not limited to, the following:

a) High-voltage conversion or upgrading;
b) Replacement of lower capacity primary transformers with higher capacity or lower impedance transformers;
c) Additional primary service from alternate sources;
d) Operation in a different mode that increases available short-circuit current, such as changing to a closed bus tie operation from a normally open configuration or the installation of a large generator on the primary distribution system.

Additionally, significant changes in motor loads within the facility may affect available fault current.

Normal, emergency, and standby system operating configurations should be included in the analysis.

As a guide, a short-circuit analysis should be performed at least every five to ten years if no major system changes have occurred that dictate a new study.

2.4.9 Protection and protective-device coordination

The protection and protective-device coordination evaluation should always be performed in conjunction with a short-circuit evaluation. This should be performed whenever there are major changes made to the utility primary electric supply that can affect available fault current or other major system changes that can affect system operation and coordination. Using

Copyright The Institute of Electrical and Electronics Engineers, Inc.
Provided by IHS under license with IEEE
No reproduction or networking permitted without license from IHS
Not for Resale

the data presented in Chapter 5, design the required protective systems. System-protection design must be an integral part of the total system design and not be superimposed on a system later.

Coordination of critical loads, such as uninterruptible power supplies (UPS) with their fast-acting overcurrent devices to protect electronic devices, should be included in the analysis.

2.4.10 Communications

Any plan for the protection of a plant must include a reliable communication system, such as a self-contained system of telephones, alarms, etc., which may include modern radio and television equipment, or by a joint system tied into the existing communication services.

Fire and smoke alarm circuits, whether self-contained or connected to municipal alarm systems, should be installed to minimize the effect of faults and changes in buildings or plant operations. Circuits should be arranged to provide easy means of testing and to isolate portions of the system without interfering with the remainder of the system.

Security guard circuits, including television and radio equipment, are used in many plants for the purpose of providing a ready means for the individual security guard to report unusual circumstances to the supervisor without delay. Such systems are frequently combined with public-address paging systems and other alarm methods.

Annunciator systems are available for alerting operations to abnormal situations in critical areas. The operator can dispatch personnel to investigate the malfunction or disorder or take corrective action.

2.4.11 Maintenance

Electric equipment must be selected and installed with attention to adequacy of performance, safety, and reliability. To preserve these features, a maintenance program must be established and tailored to the type of equipment and the details of the particular installation. Some items require daily attention, some weekly, and others can be tested or checked annually or less frequently.

Requirements of a maintenance program should be incorporated in the electrical design to provide working space, easy access for inspection, facilities for sampling and testing, and disconnecting means for protection of the workmen, lighting, and standby power. The maintenance program should have the following objectives.

2.4.11.1 Cleanliness

Dirt and dust accumulation affects the ventilation of equipment and causes excess heat, which reduces the life of the insulation. Dirt and dust also build up on the surfaces of insulators to form paths for leakage that may result in arcing faults. Insulated surfaces should be cleaned regularly to minimize these hazards.

--`,,`,,`-`-`,,`,,`,`,,`---
Copyright The Institute of Electrical and Electronics Engineers, Inc.
Provided by IHS under license with IEEE
No reproduction or networking permitted without license from IHS Not for Resale

2.4.11.2 Moisture control

Moisture reduces the dielectric strength of many insulating materials. Unnecessary openings should be closed and necessary openings should be baffled or filtered to prevent the entrance of moisture, especially light snow. Also, even though equipment is adequately housed and indoors, condensation from weather changes should be minimized by supplying heat, usually electric, to the enclosure interiors. From 5–7.5 W/ft^2 of external enclosure surface is usually effective when placed at the bottom of each space affected. A small amount of ventilation outdoors is necessary even with heating to avoid condensation damage and insulation failure.

2.4.11.3 Adequate ventilation

Much electric equipment is designed with paths for ventilating air to pass over insulating surfaces to dissipate heat. Filters must be changed, fans inspected, and equipment cleaned often enough to keep such ventilating systems operating properly.

2.4.11.4 Reduced corrosion

Corrosion destroys the integrity of equipment and enclosures. As soon as evidence of corrosion is noted, action should be taken to clean the affected surfaces and inhibit future deterioration.

2.4.11.5 Maintenance of conductors

Conducting surfaces reveal problems caused by overheating, wear, or misalignment of contact surfaces. These conditions should be corrected by tightening bolts, correcting excessive operations, aligning contacts, or whatever action is necessary.

2.4.11.6 Regular inspections

Inspections should be scheduled on a regular basis depending on equipment needs and process requirements. External inspection can often be made and reveal significant information without process shutdown. However, a complete inspection will require a shutdown. Plans for repairs should be based on such inspections so that necessary manpower, tools, and replacement parts will be available as needed during the shutdown.

2.4.11.7 Regular testing

Performance of protective devices depends on the accuracy and repeatability of the sensing devices and the integrity of the control circuits. Periodic tests of such devices as well as of the dielectric strength of insulating systems and the color and acidity of the insulating oils, etc., will reveal deteriorating conditions that cannot be determined by visual inspection. Necessary adjustments or corrections can be made before failure occurs.

Copyright The Institute of Electrical and Electronics Engineers, Inc.
Provided by IHS under license with IEEE
No reproduction or networking permitted without license from IHS
Not for Resale

2.4.11.8 Adequate records

An organized system of inspection records, maintenance, tests, and repairs provides a basis for trouble-shooting, predicting equipment failures, and selecting future equipment.

2.4.11.9 Codes and standards

Throughout the design, adherence to all applicable national and local laws, codes, and standards is required.

2.5 Power system modernization and evaluation studies/programs

The following circumstances, occurring individually, or in combination, suggest that a power system analysis and evaluation may be required to ensure continued safe and reliable power system operation. These aspects should be continually monitored to ensure that system components and operation are adequately maintained over time.

a) *Production changes*. Major production program may be initiated that could impact the primary electric power system supply and/or distribution system.
b) *Load growth*. Rapid load growth due to production increases. Typically a 10–15% load growth increase projected over a relatively short time period (i.e., 1 to $1^1/_2$ years) is cause for further evaluation.
c) *Modifications to applicable electrical laws and codes*
d) *Primary distribution system and load center substation equipment capacity limits*. Primary supply and/or transformation equipment, primary bus, primary switchgear, primary feeders, or load center substations may be nearing their firm/first contingency capacity or may be already exceeding that capacity and additional equipment or load rebalancing is required. These concerns can occur over time as routine product and process enhancements are incorporated into production operations.
e) *Power factor problems*. The first notice of a power factor problem usually occurs when there is a power factor penalty charge included in the electric utility bill. It should be noted that all utilities do not have a power factor penalty. Symptoms of a power factor problem can include blown capacitor fuses, inoperable capacitor banks, low voltage, overloaded primary feeders, etc.
f) *Harmonic problems*. Symptoms of harmonic problems include blown power factor correction capacitor fuses, a reduction in plant power factor, motor and transformer heating and/or failure, and possibly unexplainable operation malfunctions of process controls, especially timing problems in electronic equipment. Typical causes of harmonic problems include the application of power electronics and other solid-state power control devices for plant processes combined with power factor correction capacitors, creating harmonic resonance situations.
g) *Power quality problems*. Power quality problems may be encountered with the primary utility supply, within the plant primary and/or secondary distribution systems, with particular plant equipment, or with all systems. Frequent voltage sags, surges, transients, interruptions, or other utility system disturbances may affect plant

Copyright The Institute of Electrical and Electronics Engineers, Inc.
Provided by IHS under license with IEEE
No reproduction or networking permitted without license from IHS Not for Resale

production operations. Such system disturbances can also be caused by in-plant devices that generate disturbances in their operation. In some cases, equipment may create system disturbances by its operation that in turn may affect its operations. Excessive interruptions or equipment shutdown may then be encountered on the specific pieces of in-plant equipment or systems.

h) *Welding processes*. A new or additional welding process may be installed that causes problems with existing welding operations or process control schemes may be modified resulting in unacceptable operations. Symptoms include low voltage, blown fuses, poor weld quality, component overheating and/or failure.

i) *Deterioration of primary equipment*. Primary equipment can become obsolete over time; outdated due to age or condition; present safety or environmental concerns (i.e., toxic, hazardous, or containment provisions); or equipment can become overdutied, unsafe, inoperable, or approach the end of its useful life. Electrical system component response or performance over time can then be affected, suggesting that equipment be replaced or upgraded to ensure safety and system operating reliability. Conditions can usually be determined by inspection and are often obvious, although a detailed, professional inspection is important to verify the plant's findings.

Power system evaluation programs all involve the identification and resolution of safety related concerns, inadequate facility or equipment capacity concerns, and the implementation of safety improvements to maintain or enhance safety and operating reliability of the plant power system.

These evaluations perform two fundamental, extremely useful functions in the overall process of evaluating and maintaining safe and reliable power system. First, they provide a documented engineering concept or basis for the required system changes needed to resolve a particular problem, situation, or concern. Second, they provide the engineering cost basis for the required changes so that adequate funding can be estimated, supported, sought, and allocated.

The engineering activities associated with this type of evaluation are quite challenging and often are not well understood. Consequently, this type of work is sometimes performed inadequately or incompletely. This problem seems to occur primarily because the engineering task is not necessarily well defined, since defining the work and determining the conditions and the economical yet practical requirements are really the engineering assignment. This type of work requires the application of experience and engineering concepts and not a simple application of known design rules.

2.5.1 Criteria for engineering studies and evaluations

Criteria for these studies should be developed in a conceptual format. The criteria should define the known or identified problems, concerns, or circumstances that are to be addressed in the evaluation of the existing power system. The specific system concept requirements that require identification, evaluation, and resolution should be described, including supply/distribution system concept development, system analysis, system/equipment evaluations, and general schedule requirements for the projects.

Copyright The Institute of Electrical and Electronics Engineers, Inc.
Provided by IHS under license with IEEE
No reproduction or networking permitted without license from IHS
Not for Resale

Conceptual engineering study work areas may typically include the following types:

a) Evaluation of the adequacy of power system equipment, including the testing and coordination of protective devices
b) Analysis for the expansion/conversion of the medium-voltage primary supply
c) Plant distribution system life-extension and modernization evaluation and alternatives
d) Load-flow analysis
e) Network (including welding system) studies to define available fault current, voltage drops, and load flow
f) Motor-starting studies
g) Short-circuit analysis and protective-device coordination
h) Power-factor improvement programs including evaluation of harmonic resonance concerns and/or need for tuned-filter apparatus
i) Specifications, standards, and guidance development
j) PCB-equipment-replacement programs
k) Switching-transients analysis
l) Harmonic analysis of the power system
m) Reliability analysis
n) Removal and construction work sequence for modernization projects to ensure that the work is feasible during production operations and to establish a cost baseline
o) Cable-ampacity analysis
p) Ground-mat studies

The study criteria should also define the applicable standard specifications that will apply to the work when performed. These specifications should be considered in developing and evaluating alternatives, in performing the study, and when preparing any cost estimates for concept projects.

2.6 References

This standard shall be used in conjunction with the following publications:

ANSI/NFPA 70-1993, National Electrical Code.[2]

ANSI/NFPA 70B-1990, Recommended Practice for Electrical Equipment Maintenance.

IEEE P277, Recommended Practice for Cement Plant Power Distribution (D1.1, 6/9/88).[3]

IEEE Std 315-1975 (CSA Z99-1975) (Reaff 1989), IEEE Standard Graphic Symbols for Electrical and Electronics Diagrams (ANSI).[4]

---

[2]NFPA publications are available from Publication Sales, National Fire Protection Agency, 1 Batterymarch Park, P.O. Box 9101, Quincy, MA 02269-9101, USA.

[3]This IEEE authorized standards project is available from the Sales Dept., IEEE Service Center, 445 Hoes Lane, Piscataway, NJ 08855-1331.

[4]IEEE publications are available from the Institute of Electrical and Electronics Engineers, Service Center, 445 Hoes Lane, Piscataway, NJ 08855-1331, USA.

Copyright The Institute of Electrical and Electronics Engineers, Inc.
Provided by IHS under license with IEEE
No reproduction or networking permitted without license from IHS Not for Resale

IEEE Std 493-1990, IEEE Recommended Practice for the Design of Reliable Industrial and Commercial Power Systems (IEEE Gold Book) (ANSI).

2.7 Bibliography

[B1] Bjornson, N. R., "How Much Redundancy and What It Will Cost," *IEEE Transactions on Industry and General Applications*, vol. IGA-6, pp. 192–195, May/June 1970.

[B2] Gannon, P. E., "Cost of Interruptions; Economic Evaluation of Reliability," IEEE Industrial and Commercial Power Systems Technical Conference, Los Angeles, May 10–13, 1976.

[B3] Heising, C. R., "Examples of Reliability and Availability Analysis of Common Low-Voltage Industrial Power Distribution Systems," IEEE Industrial and Commercial Power Systems Technical Conference, Los Angeles, May 10–13, 1976.

[B4] Heising, C. R., "Reliability and Availability Comparison of Common Low-Voltage Industrial Power Distribution Systems," *IEEE Transactions on Industry and General Applications*, vol. IGA-6, pp. 416–424, Sept./Oct. 1970.

[B5] IEEE Committee Report, "Report on Reliability Survey of Industrial Plants, Parts I–III," *IEEE Transactions on Industry Applications*, vol. IA-10, pp. 213–252, Mar./Apr. 1974.

[B6] Beeman, E. D., *Industrial Power System Handbook*. New York: McGraw-Hill Book Company, Inc., 1955.

[B7] Johnson, G. T., and Breniman, P. E., "Electrical Distribution System for a Large Fertilizer Complex," *IEEE Transactions on Industry and General Applications*, vol. IGA-5, pp. 566–577, Sept./Oct. 1969.

[B8] McFadden, R. H., "Power-System Analysis: What It Can Do for Industrial Plants," *IEEE Transactions on Industry and General Applications*, vol. IGA-7, pp. 181–188, Mar./Apr. 1971.

[B9] Paten, A. D., "Fundamentals of Power System Reliability Evaluation," IEEE Industrial and Commercial Power Systems Technical Conference, Los Angeles, May 10–13, 1976.

[B10] Regotti, A. R., and Trasky, J. G., "What to Look for in a Low-Voltage Unit Substation," *IEEE Transactions on Industry and General Applications*, vol. IGA-5, pp. 710–719, Nov./Dec. 1969.

[B11] Shaw, E. T., *Inspection and Test of Electrical Equipment*. Pittsburgh, PA: Westinghouse Electric Corporation, Electric Service Division, Pub. MB3051, 1967.

[B12] Yuen, M. H., and Knight, R. L., "On-Site Electrical Power Generation and Distribution for Large Oil and Gas Production Complex in Libya," *IEEE Transactions on Industry and General Applications*, vol. IGA-7, pp. 273–289, Mar./Apr. 1971.

Copyright The Institute of Electrical and Electronics Engineers, Inc.
Provided by IHS under license with IEEE
No reproduction or networking permitted without license from IHS
Not for Resale

This page intentionally left blank

Copyright The Institute of Electrical and Electronics Engineers, Inc.
Provided by IHS under license with IEEE
No reproduction or networking permitted without license from IHS
Not for Resale

Chapter 3
Voltage considerations

3.1 General

An understanding of system voltage nomenclature and the preferred voltage ratings of distribution apparatus and utilization equipment is essential to ensure proper voltage identification throughout a power distribution system. The dynamic characteristics of the system need to be recognized and the proper principles of voltage control applied so that satisfactory voltages will be supplied to all utilization equipment under all normal conditions of operation. Consideration should be given for transient and momentary voltage variations to ensure appropriate performance of utilization equipment.

3.1.1 Definitions

The following terms and definitions, quoted from ANSI C84.1-1989,[1] are used to identify the voltages and voltage classes used in electric power distribution.

3.1.1.1 System voltage terms

Note that the nominal system voltage is near the voltage level at which the system normally operates. To allow for operating contingencies, systems generally operate at voltage levels about 5–10% below the maximum system voltage for which system components are designed.

3.1.1.1.1 system voltage: The root-mean-square phase-to-phase voltage of a portion of an ac electric system. Each system voltage pertains to a portion of the system that is bounded by transformers or utilization equipment. (All voltages hereafter are root-mean-square phase-to-phase or phase-to-neutral voltages.)

3.1.1.1.2 nominal system voltage: The voltage by which a portion of the system is designated and to which certain operating characteristics of the system are related. Each nominal system voltage pertains to a portion of the system that is bounded by transformers or utilization equipment.

3.1.1.1.3 maximum system voltage: The highest system voltage that occurs under normal operating conditions, and the highest system voltage for which equipment and other components are designed for satisfactory continuous operation without derating of any kind. In defining maximum system voltage, voltage transients and temporary overvoltages caused by abnormal system conditions, such as faults, load rejection, and the like, are excluded. However, voltage transients and temporary overvoltages may affect equipment operating performance and are considered in equipment application.

[1]Information on references can be found in 3.12.

--`,,`,,`,`,,`---

Copyright The Institute of Electrical and Electronics Engineers, Inc.
Provided by IHS under license with IEEE
No reproduction or networking permitted without license from IHS Not for Resale

3.1.1.1.4 service voltage: The voltage at the point where the electric system of the supplier and the electric system of the user are connected.

3.1.1.1.5 utilization voltage: The voltage at the line terminals of utilization equipment.

3.1.1.1.6 nominal utilization voltage: The voltage rating of certain utilization equipment used on the system.

3.1.1.2 System voltage classes

3.1.1.2.1 low voltage: A class of nominal system voltages less than 1000 V.

3.1.1.2.2 medium voltage: A class of nominal system voltages equal to or greater than 1000 V and less than 100 000 V.

3.1.1.2.3 high voltage: A class of nominal system voltages equal from 100 000 V to 230 000 V.

3.1.2 Standard nominal system voltages for the United States

These voltages and their associated tolerance limits are listed in ANSI C84.1-1989 for voltages from 120–230 000 V and in ANSI C92.2-1987 for voltages above 230 kV nominal. Table 3-1, reprinted from ANSI C84.1-1989 and containing information from ANSI C92.9-1987, provides all the standard nominal system voltages and their associated tolerance limits for the United States. Preferred nominal system voltages and voltage ranges are shown in boldface type while other systems in substantial use that are recognized as standard voltages are shown in regular type. Other voltages may be encountered on older systems but they are not recognized as standard voltages. The transformer connections from which these voltages are derived are shown in figure 3-1.

Two sets of tolerance limits are defined: range A, which specifies the limits under most operating conditions, and range B, which allows minor excursions outside the range A limits.

3.1.3 Application of voltage classes

a) Low-voltage class voltages are used to supply utilization equipment.
b) Medium-voltage class voltages are used for subtransmission and primary distribution. Medium voltages often supply distribution transformers which step the medium voltage down to low voltage to supply utilization equipment. Medium voltages may also supply distribution substations that transform the voltage from a higher to a lower voltage in the medium-voltage class. Medium voltages of 13 800 V and below are also used to supply utilization equipment such as large motors (see 3.5.2, table 3-8).
c) High-voltage class voltages are used to transmit large amounts of electric power between transmission substations. Transmission substations located adjacent to generating stations step the generator voltage up to the transmission voltage. Other transmission substations transform the high voltage down to medium voltage for

Copyright The Institute of Electrical and Electronics Engineers, Inc.
Provided by IHS under license with IEEE
No reproduction or networking permitted without license from IHS Not for Resale

Copyright The Institute of Electrical and Electronics Engineers, Inc.
Provided by IHS under license with IEEE
No reproduction or networking permitted without license from IHS
Not for Resale

Table 3-1—Standard nominal system voltages and voltage ranges

(Preferred system voltages in bold-face type)

VOLTAGE CLASS	NOMINAL SYSTEM VOLTAGE (Note a)			Nominal Utilization Voltage (Note j)	VOLTAGE RANGE A (Note b)			VOLTAGE RANGE B (Note b)		
					Maximum	Minimum		Maximum	Minimum	
	Two-wire	Three-wire	Four-wire	Two-wire Three-wire Four-wire	Utilization and Service Voltage (Note c)	Service Voltage	Utilization Voltage	Utilization and Service Voltage	Service Voltage	Utilization Voltage
Low Voltage (Note 1)					**Single-Phase Systems**					
	120			**115**	126	114	110	127	110	106
		120/240		**115/230**	**126/252**	**114/228**	**110/220**	**127/254**	**110/220**	**106/212**
					Three-Phase Systems					
			208Y/120 (Note d)	**200**	**218Y/126**	**197Y/114**	**191Y/110**	**220Y/127**	**191Y/110** (Note 2)	**184Y/106** (Note 2)
			240/120	**230/115**	**252/126**	**228/114**	**220/110**	**254/127**	**220/110**	**212/106**
		240		**230**	252	228	220	254	220	212
			480Y/277	**460**	**504Y/291**	**456Y/263**	**440Y/254**	**508Y/293**	**440Y/254**	**424Y/245**
		480		**460**	**504**	**456**	**440**	**508**	**440**	**424**
		600 (Note e)		**575**	630 (Note e)	570	550	635 (Note e)	550	530
Medium Voltage		2 400			2 520	2 340	2 160	2 540	2 280	2 080
			4 160Y/2 400		4 370/2 520	4 050Y/2 340	3 740Y/2 160	4 400Y/2 540	3 950Y/2 280	3 600/2 080
		4 160			**4 370**	**4 050**	**3 740**	**4 400**	**3 950**	**3 600**
		4 800			5 040	4 680	4 320	5 080	4 560	4 160
		6 900			7 240	6 730	6 210	7 260	6 560	5 940
			8 320Y/4 800		8 730Y/5 040	8 110Y/4 680		8 800Y/5 080	7 900Y/4 560	
			12 000Y/6 930		12 600Y/7 270	11 700Y/6 760		12 700Y/7 330	11 400Y/6 580	
			12 470Y/7 200		**13 090Y/7 560**	**12 160Y/7 020**	(Note f)	**13 200Y/7 620**	**11 850Y/6 840**	(Note f)
			13 200Y/7 620		**13 860Y/8 000**	**12 870Y/7 430**		**13 970Y/8 070**	**12 504Y/7 240**	
			13 800Y/7 970		14 490Y/8 370	13 460Y/7 770		14 520Y/8 380	13 110Y/7 570	
		13 800			**14 490**	**13 460**	**12 420**	**14 520**	**13 110**	**11 880**
			20 780Y/12 000		21 820Y/12 600	20 260Y/11 700		22 000Y/12 700	19 740Y/11 400	
			22 860Y/13 200		24 000Y/13 860	22 290Y/12 870		24 200Y/13 970	21 720Y/12 540	
		23 000			24 150	22 430	(Note f)	24 340	21 850	(Note f)
			24 940Y/14 400		**26 190Y/15 120**	**24 320Y/14 040**		**26 400Y/15 240**	**23 690Y/13 680**	
			34 500Y/19 920		**36 230Y/20 920**	**33 640Y/19 420**		**36 510Y/21 080**	**32 780Y/18 930**	
		34 500			36 230	33 640		36 510	32 780	
		46 000			**Maximum Voltage** (Note g) 48 300					
		69 000			**72 500**					
High Voltage		**115 000**			**121 000**					
		138 000			**145 000**					
		161 000			169 000					
		230 000			**242 000**					
		(Note h)								
Extra-High Voltage		**345 000**			**362 000**					
		500 000			**550 000**					
		765 000			**800 000**					
Ultra-High Voltage		**1 100 000**			**1 200 000**					

NOTES: (1) Minimum utilization voltages for 120-600 volt circuits not supplying lighting loads are as follows.

Nominal System Voltage	Range A	Range B
120	108	104
120/240	**108/216**	**104/208**
(Note 2) **208Y/120**	**187Y/108**	**180Y/104**
240/120	**216/108**	**208/104**
240	216	208
480Y/277	**432Y/249**	**416Y/240**
480	**432**	**416**
600	540	520

(2) Many 220 volt motors were applied on existing 208 volt systems on the assumption that the utilization voltage would not be less than 187 volts. Caution should be exercised in applying the Range B minimum voltages of Table 1 and Note (1) to existing 208 volt systems supplying such motors.

Source: ANSI C84.1-1989

Table 3-1 (Continued)

NOTES FOR TABLE 3-1
a—Three-phase, three-wire systems are systems in which only the three-phase conductors are carried out from the source for connection of loads. The source may be derived from any type of three-phase transformer connection, grounded or ungrounded. Three-phase, four-wire systems are systems in which a grounded neutral conductor is also carried out from the source for connection of loads. Four-wire systems in this table are designated by the phase-to-phase voltage, followed by the letter Y (except for the 240/120 V delta system), a slant line, and the phase-to-neutral voltage. Single-phase services and loads may be supplied from either single-phase or three-phase systems. The principal transformer connections that are used to supply single-phase and three-phase systems are illustrated in figure 3-1.
b—The voltage ranges in this table are illustrated in ANSI C84.1-1989, Appendix B.
c—For 120–600 V nominal systems, voltages in this column are maximum service voltages. Maximum utilization voltages would not be expected to exceed 125 V for the nominal system voltage of 120, nor appropriate multiples thereof for other nominal system voltages through 600 V.
d—A modification of this three-phase, four-wire system is available as a 120/208Y-volt service for single-phase, three-wire, open-wye applications.
e—Certain kinds of control and protective equipment presently available have a maximum voltage limit of 600 V; the manufacturer or power supplier, or both, should be consulted to ensure proper application.
f—Utilization equipment does not generally operate directly at these voltages. For equipment supplied through transformers, refer to limits for nominal system voltage of transformer output.
g—For these systems, Range A and Range B limits are not shown because, where they are used as service voltages, the operating voltage level on the user's system is normally adjusted by means of voltage regulation to suit their requirements.
h—Standard voltages are reprinted from ANSI C92.2-1987 for convenience only.
i—Nominal utilization voltages are for low-voltage motors and control. See ANSI C84.1-1989, Appendix C, for other equipment nominal utilization voltages (or equipment nameplate voltage ratings).

subtransmission and primary distribution. Transmission lines also interconnect transmission substations to provide alternate paths for power transmission for higher reliability.

3.1.4 Voltage systems outside of the United States

Voltage systems in other countries generally differ from those in the United States. For example, 415Y/240 V and 380Y/220 V are widely used as utilization voltages even for residential service. Also, the frequency in many countries is 50 Hz instead of 60 Hz, which affects the operation of some equipment such as motors. Motors on 50 Hz systems run approximately 17% slower than in the United States. Plugs and receptacles are generally different, and this helps to prevent utilization equipment from the United States from being connected to the wrong voltage.

Users should check with the equipment manufacturer before attempting to operate equipment on a voltage or frequency for which the equipment is not specifically rated. Equipment rated for use with one voltage and frequency often cannot be used or may not give adequate performance on another voltage or frequency. Some equipment has multiple voltage and/or frequency ratings for application on a variety of systems. If electric equipment made for use on one system must be used on a different system, information on the voltage, frequency, and type of plug required should be obtained. If the difference is only in the voltage, transformers are generally available to convert the available supply voltage to match the equipment voltage.

--`,,`,,`-`-`,,`,,`,`,,`---

Copyright The Institute of Electrical and Electronics Engineers, Inc.
Provided by IHS under license with IEEE
No reproduction or networking permitted without license from IHS Not for Resale

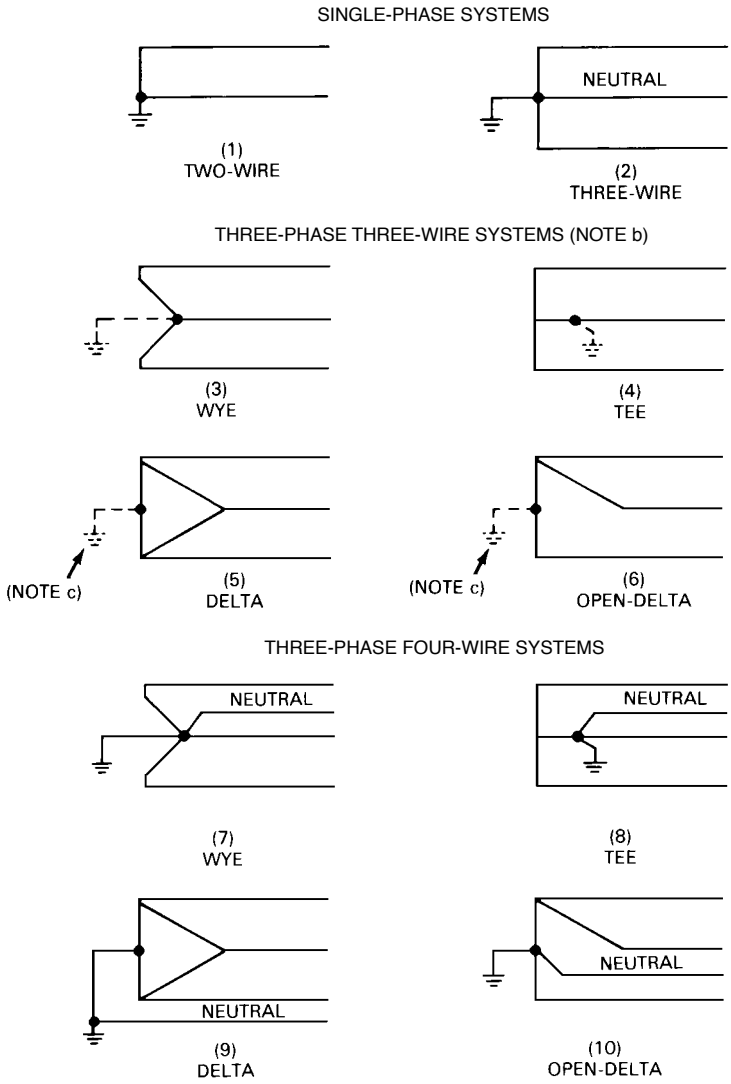

NOTES

a—The above diagrams show connections of transformer secondary windings to supply the nominal system voltages of table 3-1. Systems of more than 600 V are normally three phase and supplied by connections (3), (5) ungrounded, or (7). Systems of 120–600 V may be either single phase or three phase and all of the connections shown are used to some extent for some systems in this voltage range.

b—Three-phase, three-wire systems may be solidly grounded, impedance grounded, or ungrounded, but are not intended to supply loads connected phase-to-neutral (as the four-wire systems are).

c—In connections (5) and (6), the ground may be connected to the midpoint of one winding as shown (if available), to one phase conductor (*corner* grounded), or omitted entirely (ungrounded).

d—Single-phase services and single-phase loads may be supplied from single-phase systems or from three-phase systems. They are connected phase-to-phase when supplied from three-phase, three-wire systems and either phase-to-phase or phase-to-neutral from three-phase, four-wire systems.

Figure 3-1—Principal transformer connections to supply the system voltages of table 3-1

Copyright The Institute of Electrical and Electronics Engineers, Inc.
Provided by IHS under license with IEEE
No reproduction or networking permitted without license from IHS
Not for Resale

3.1.5 Voltage standard for Canada

The voltage standard for Canada is CAN3-C235-83. This standard differs from the United States standard in both the list of standard nominal voltages and the tolerance limits.

3.2 Voltage control in electric power systems

Power supply systems and utilization equipment should be designed to be compatible. This requires coordinated efforts and standards that place requirements on voltage ranges supplied by utilities, allowable voltage drops in plant distribution systems, and voltage ranges for utilization equipment. This section outlines these coordinated efforts and standards associated with assuring good operation of the utilization equipment.

3.2.1 Principles of power transmission and distribution in utility systems

A general understanding of the principles of power transmission and distribution in utility systems is necessary since most industrial plants obtain most of their electric power from the local electric utility. Figure 3-2 shows a simplified one-line diagram of a typical utility power generation, transmission, and distribution system.

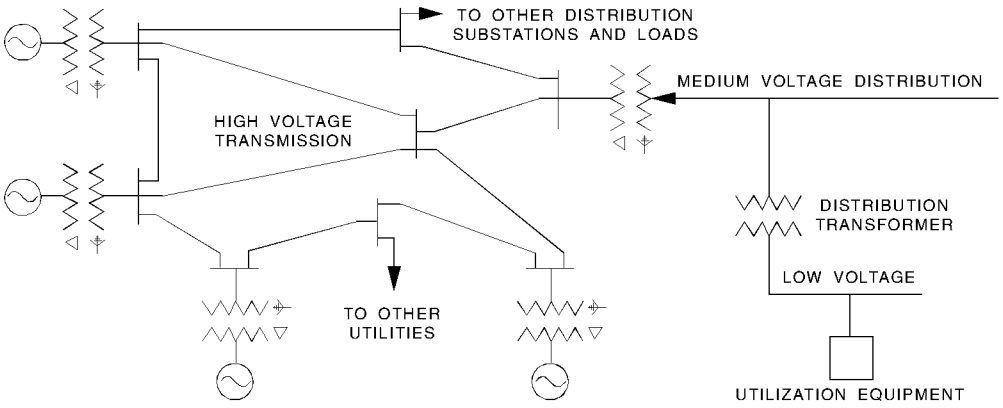

Figure 3-2—Typical utility generation, transmission and distribution system

Most utility generating stations are located near sources of water, often a considerable distance from major load areas. Generated power, except for station requirements, is transformed in a transmission substation located at the generating station to voltage generally 69 000 V or higher for transmission to major load areas. These transmission lines are usually interconnected in large free flowing networks. For example, most transmission lines in the eastern half of the United States are interconnected to form one network. Utilities are constantly adjusting generation to match the load. They adjust generation to regulate the 60 Hz frequency, keeping clocks on time within a few seconds. Transmission lines are generally for

Copyright The Institute of Electrical and Electronics Engineers, Inc.
Provided by IHS under license with IEEE
No reproduction or networking permitted without license from IHS
Not for Resale

bulk energy transfers and are controlled only to keep the lines operating within normal voltage limits and to facilitate power flow. ANSI C84.1-1989 and ANSI C92.2-1987 specify nominal and maximum but no minimum values for systems over 34 500 V.

Transmission line networks supply distribution substations equipped with transformers that step the transmission voltage down to a primary distribution voltage generally in the range from 4160 to 34 500 V with 12 470, 13 200, and 13 800 V in widest use. There is an increasing trend in the electric utility industry to use 23 kV and 34.5 kV for distribution. If the supplying utility offers one of these voltages for primary distribution within a building, competent electricians experienced in making splices and terminations must be secured to obtain a good installation.

Voltage control is applied when necessary for the purpose of supplying satisfactory voltage to the terminals of utilization equipment. Transformers stepping the transmission voltage down to the primary distribution voltage are generally equipped with automatic tap-changing-under-load equipment, which changes the turns ratio of the transformer under load. This regulates the primary distribution voltage within a specific range of values regardless of fluctuations in the transmission voltage or load. Separate step or induction regulators may also be used.

If the load is remote from the substation, the regulator controls are equipped with compensators that raise the voltage as the load increases and lower the voltage as the load decreases to compensate for the voltage drop in the primary distribution system that extends radially from the substation. This effectively regulates the voltage at a point of the primary distribution system some distance from the substation. This is illustrated in figure 3-3. Note that plants close to the substation will receive voltages which, on the average, will be higher than those received by plants at a distance from the distribution substation. See 3.2.8 on the use of distribution transformer taps. Switched or fixed capacitors are also used to improve the voltage on primary feeders.

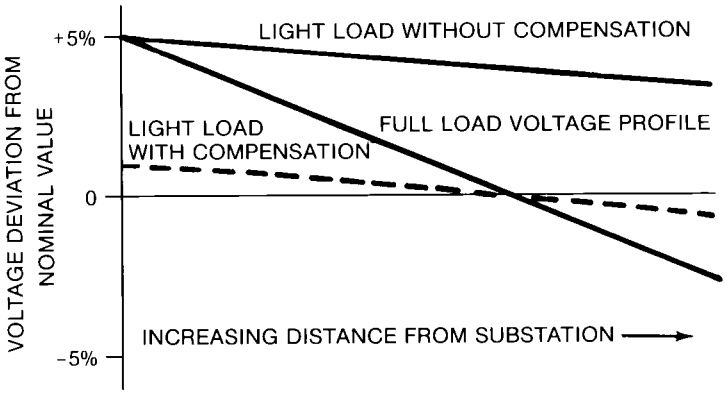

Figure 3-3—Effect of regulator compensation on primary distribution system voltage

Copyright The Institute of Electrical and Electronics Engineers, Inc.
Provided by IHS under license with IEEE
No reproduction or networking permitted without license from IHS
Not for Resale

The primary distribution system supplies distribution transformers that step the primary distribution voltage down to utilization voltages generally in the range of 120 to 600 V to supply a secondary distribution system to which the utilization equipment is connected. Distribution transformers generally do not have any automatic means for regulating the utilization voltage. Small transformers used to step a higher utilization voltage down to a lower utilization voltage, such as 480 V to 208Y/120 V, are considered part of the secondary distribution system.

The supply voltages available to an industrial plant depend upon whether the plant is connected to the distribution transformer, the primary distribution system, or the transmission system, which in turn depends on the size of the plant load.

Small plants with loads up to several hundred kilovoltamperes and all plants supplied from low-voltage secondary networks are connected to the distribution transformer, and the secondary distribution system consists of the connections from the distribution transformer to the plant service and the plant wiring.

Medium-sized plants with loads of a few thousand kilovoltamperes are connected to the primary distribution system, and the plant provides the portion of the primary distribution system within the plant, the distribution transformers, and the secondary distribution system.

Large plants with loads of more than a few thousand kilovoltamperes are connected to the transmission system, and the plant provides the primary distribution system, the distribution transformers, the secondary distribution system, and it may provide the distribution substation.

Details of the connection between the utility system and the plant system will depend on the policy of the supplying utility. Refer to Chapter 15 for more detailed information about utility interface considerations.

3.2.2 System voltage tolerance limits

ANSI C84.1-1989 specifies the preferred nominal voltages and operating voltage ranges for utilization and distribution equipment operating from 120–34 500 V in the United States. It specifies voltages for two critical points on the distribution system: the point of delivery by the supplying utility and the point of connection to utilization equipment. For transmission voltages over 34 500 V, ANSI C84.1-1989 only specifies the nominal and maximum voltage because these voltages are normally unregulated and only a maximum voltage is required to establish the design insulation level for the line and associated apparatus.

The actual voltage measured at any point on the system will vary depending on the location of the point of measurement and the system load at the time the measurement is made. Fixed voltage changes take place in transformers in accordance with the transformer ratio. Voltage variations occur from the operation of voltage control equipment, changes in voltage drop due to changes in load current, and other reasons. It should be recognized that because of conditions beyond the control of the supplier or user, or both, there will be infrequent and limited periods when sustained voltages outside range B limits will occur.

Copyright The Institute of Electrical and Electronics Engineers, Inc.
Provided by IHS under license with IEEE
No reproduction or networking permitted without license from IHS Not for Resale

The tolerance limits for the service voltage provide guidance to the supplying utility for the design and operation of its distribution system. The service voltage is the voltage at the point where the utility conductors connect to the user conductors. It is generally measured at the service switch for services of 600 V and below and at the billing meter voltage (potential) transformers for services over 600 V. The tolerance limits for the voltage at the point of connection of utilization equipment provide guidance to the user for the design and operation of the user distribution system, and to utilization equipment manufacturers for the design of utilization equipment. Electric supply systems are to be designed and operated so that most service voltages fall within the range A limits. User systems are to be designed and operated so that, when the service voltages are within range A, the utilization voltages are within range A. Utilization equipment is to be designed and rated to give fully satisfactory performance within the range A limits for utilization voltages.

Range B allows limited excursions of voltage outside the range A limits that necessarily result from practical design and operating conditions. When voltages are outside range A and inside range B, the corrective action should be taken within a reasonable time to restore service voltages to range A limits. Insofar as practicable, utilization equipment may be expected to give acceptable performance at voltages outside range A but within range B. When voltages occur outside the limits of range B, prompt corrective action should be taken. Responsibility for corrective action depends upon where the voltage is out of range A compared to the limits specified for each location identified in ANSI C84.1-1989.

3.2.3 Development of the voltage tolerance limits for ANSI C84.1-1989

The voltage tolerance limits in ANSI C84.1-1989 are based on NEMA MG 1-1993, which established the voltage tolerance limits of the standard induction motor at ±10% of nameplate ratings of 230 V and 460 V. Since motors represent the major component of utilization equipment, they were given primary consideration in the establishment of the voltage standard.

The best way to show the voltages in an electric power distribution system is in terms of a 120 V base. This cancels the transformation ratios between systems so that the actual voltages vary solely on the basis of the voltage drops in the system. Any voltage may be converted to a 120 V base by dividing the actual voltage by the ratio of transformation to the 120 V base. For example, the ratio of transformation for the 480 V system is 480/120 or 4, so 460 V in a 480 V system would be 460/4 or 115 V on a 120 V base.

The tolerance limits of the 460 V motor in terms of the 120 V base become 115 V plus 10%, or 126.5 V, and 115 V minus 10%, or 103.5 V. The problem is to decide how this tolerance range of 23 V should be divided between the primary distribution system, the distribution transformer, and the secondary distribution system, which make up the regulated distribution system. The solution adopted by ANSI Accredited Committee C84 is shown in table 3-2.

The Range B tolerance limits raised the standard motor tolerance on the 120 V base 0.5 V to 127 V maximum and 104 V minimum to eliminate the fractional volt. These values became the tolerance limits for range B in the standard. An allowance of 13 V was allotted for the voltage drop in the primary distribution system. Deducting this voltage drop from 127 V establishes a minimum of 114 V for utility services supplied from the primary distribution

Copyright The Institute of Electrical and Electronics Engineers, Inc.
Provided by IHS under license with IEEE
No reproduction or networking permitted without license from IHS
Not for Resale

Table 3-2—Standard voltage profile for low-voltage regulated power distribution system, 120 V base

	Range A (V)	Range B (V)
Maximum allowable voltage	126 (125*)	127
Voltage drop allowance for primary distribution line	9	13
Minimum primary service voltage	117	114
Voltage drop allowance for distribution transformer	3	4
Minimum secondary service voltage	114	110
Voltage drop allowance for plant wiring	6 (4†)	6 (4†)
Minimum utilization voltage	108 (110†)	104 (106†)

*For utilization voltage of 120–600 V.
†For building wiring circuits supplying lighting equipment.

system. An allowance of 4 V was provided for the voltage drop in the distribution transformer and the connections to the plant wiring. Deducting this voltage drop from the minimum primary distribution voltage of 114 V provides a minimum of 110 V for utility secondary services from 120–600 V. An allowance of 6 V, or 5%, for the voltage drop in the plant wiring, as provided in ANSI/NFPA 70-1993 (the National Electrical Code [NEC]) Articles 210-19(a) (FPN No. 4) and 215-2(b) (FPN No. 2), provides the minimum utilization voltage of 104 V.

The range A limits for the standard were established by reducing the maximum tolerance limits from 127 V to 126 V and increasing the minimum tolerance limits from 104 V to 108 V. The spread band of 18 V was then allotted as follows: 9 V for the voltage drop in the primary distribution system to provide a minimum primary service voltage of 117 V; 3 V for the voltage drop in the distribution transformer and secondary connections to provide a minimum secondary service voltage of 114 V; and 6 V for the voltage drop in the plant low-voltage wiring to provide a minimum utilization voltage of 108 V.

Four additional modifications were made in this basic plan to establish ANSI C84.1-1989. The maximum utilization voltage in range A was reduced from 126 V to 125 V for low-voltage systems in the range from 120 to 600 V because there should be sufficient load on the distribution system to provide at least 1 V drop on the 120 V base under most operating conditions. This maximum voltage of 125 V is also a practical limit for lighting equipment because the life of the 120 V incandescent lamp is reduced by 42% when operated at 125 V (see 3.5.4, table 3-9). The voltage drop allowance of 6 V on the 120 V base for the drop in the plant wiring was reduced to 4 V for circuits supplying lighting equipment. This raised the minimum voltage limit for utilization equipment to 106 V in range B and 110 V in range A

--`,,`,,`-`-`,,`,,`,`,,`---

Copyright The Institute of Electrical and Electronics Engineers, Inc.
Provided by IHS under license with IEEE
No reproduction or networking permitted without license from IHS Not for Resale

because the minimum limits for motors of 104 V in range B and 108 V in range A were considered too low for satisfactory operation of lighting equipment. The utilization voltages for the 6900 V and 13 800 V systems in range B were adjusted to coincide with the tolerance limits of ±10% of the nameplate rating of the 6600 V and 13 200 V motors used on these respective systems.

To convert the 120 V base voltage to equivalent voltages in other systems, the voltage on the 120 V base is multiplied by the ratio of the transformer that would be used to connect the other system to a 120 V system. In general, distribution transformers for systems below 15 000 V have nameplate ratings that are the same as the standard system nominal voltages; so the ratio of the standard nominal voltages may be used to make the conversion. However, for primary distribution voltages over 15 000 V, the primary nameplate rating of distribution transformers is not the same as the standard system nominal voltages. Also, most distribution transformers are equipped with taps that can be used to change the ratio of transformation. So if the primary distribution voltage is over 15 000 V, or taps have been used to change the transformer ratio, then the actual transformer ratio must be used to convert the base voltage to another system.

For example, the maximum tolerance limit of 127 V on the 120 V base for the service voltage in range B is equivalent, on the 4160 V system, to 4160 ÷ 120 · 127 = 4400 V to the nearest 10 V. However, if the 4160-120 V transformer is set on the +2½% tap, the voltage ratio would be 4160 + (4160 · 0.025) = 4160 + 104 = 4264 to 120. The voltage on the primary system equivalent to 127 V on the secondary system would be 4264 ÷ 120 · 127 = 35.53 · 127 = 4510 V to the nearest 10 V. If the maximum primary distribution voltage of 4400 V is applied to the 4264-120 V transformer, the secondary voltage would be 4400 ÷ 4260 · 120 = 124 V.

3.2.4 Voltage profile limits for a regulated distribution system

Figure 3-4 shows the voltage profile of a regulated power distribution system using the limits of range A in table 3-1. Assuming a nominal primary distribution voltage of 13 800 V, range A in table 3-1 shows that this voltage should be maintained by the supplying utility between a maximum of 126 V and a minimum of 117 V on a 120 V base. Since the base multiplier for converting from the 120 V system to the 13 800 V system is 13 800/120 or 115, the actual voltage limits for the 13 800 V system are 115 · 126 or 14 490 V maximum and 115 · 117 or 13 460 V minimum.

If a distribution transformer with a ratio of 13 800 to 480 V is connected to the 13 800 V distribution feeder, range A of table 3-1 requires that the nominal 480 V secondary service be maintained by the supplying utility between a maximum of 126 V and a minimum of 114 V on the 120 V base. Since the base multiplier for the 480 V system is 480/120 or 4, the actual values are 4 · 126 or 504 V maximum and 4 · 114 or 456 V minimum.

Range A of table 3-1 as modified for utilization equipment of 120–600 V provides for a maximum utilization voltage of 125 V and a minimum of 110 V for lighting equipment and 108 V for other than lighting equipment on the 120 V base. Using the base multiplier of 4 for the 480 V system, the maximum utilization voltage would be 4 · 125 V or 500 V and the minimum for other than lighting equipment would be 4 · 108 V or 432 V. For lighting equipment

--`,,`,,`-`-`,,`,,`,`,,`---

Copyright The Institute of Electrical and Electronics Engineers, Inc.
Provided by IHS under license with IEEE
No reproduction or networking permitted without license from IHS
Not for Resale

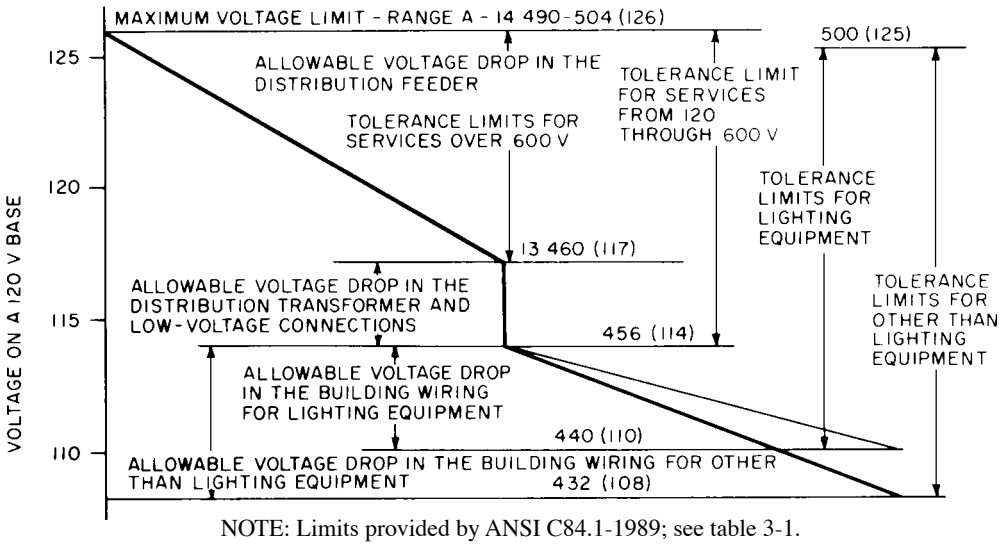

NOTE: Limits provided by ANSI C84.1-1989; see table 3-1.

Figure 3-4—Range A voltage profile limits

connected phase to neutral, the maximum voltage would be 500 V divided by the square root of 3 or 288 V and the minimum voltage would be 4 · 110 V or 440 V divided by the square root of 3 or 254 V.

3.2.5 System voltage nomenclature

The nominal system voltages in table 3-1 are designated in the same way as on the nameplate of the transformer for the winding or windings supplying the system.

a) *Single-Phase Systems*

- 120 — Indicates a single-phase, two-wire system in which the nominal voltage between the two wires is 120 V.
- 120/240 — Indicates a single-phase, three-wire system in which the nominal voltage between the two phase conductors is 240 V, and from each phase conductor to the neutral it is 120 V.

b) *Three-Phase Systems*

- 240/120 — Indicates a three-phase, four-wire system supplied from a delta connected transformer. The midtap of one winding is connected to a neutral. The three-phase conductors provide a nominal 240 V three-phase system, and the neutral and the two adjacent phase conductors provide a nominal 120/240 V single-phase system.
- 480 — Indicates a three-phase, three-wire system in which the number designates the nominal voltage between phases.
- 480Y/277 — Indicates a three-phase, four-wire system from a wye-connected transformer in which the first number indicates the nominal phase-to-phase voltage and the second number indicates the nominal phase-to-neutral voltage.

Copyright The Institute of Electrical and Electronics Engineers, Inc.
Provided by IHS under license with IEEE
No reproduction or networking permitted without license from IHS
Not for Resale

NOTES

1—All single-phase systems and all three-phase, four-wire systems are suitable for the connection of phase-to-neutral load.

2—See Chapter 7 for methods of system grounding.

3—Figure 3-5 gives an overview of voltage relationships for 480 V three-phase systems and 120/240 V single- and three-phase systems.

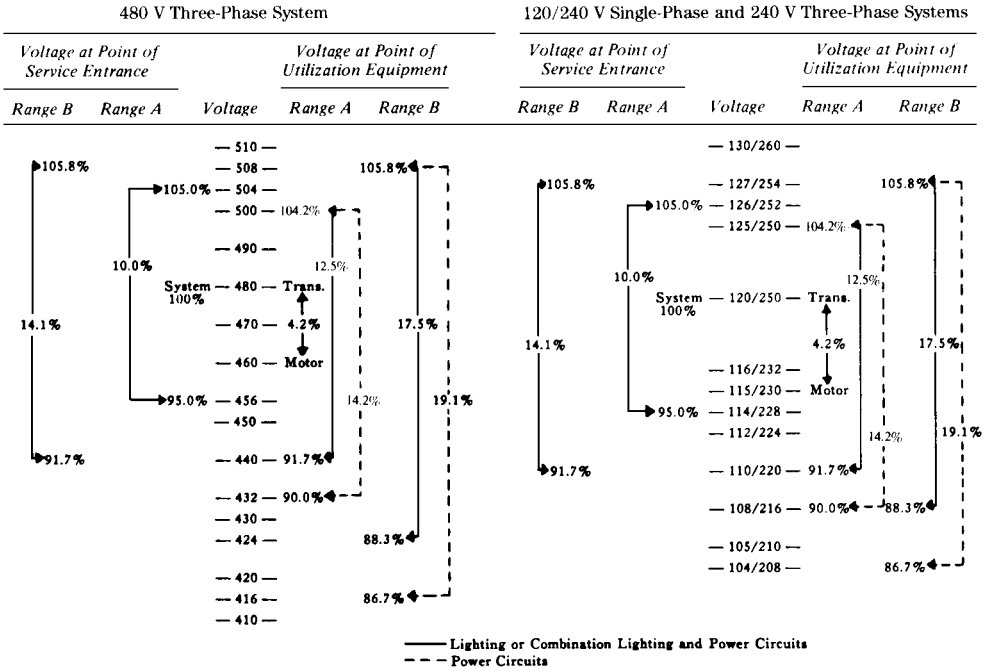

Figure 3-5—Voltage relationships based on voltage ranges in ANSI C84.1-1989

3.2.6 Nonstandard nominal system voltages

Since ANSI C84.1-1989 lists only the standard nominal system voltages in common use in the United States, system voltages will frequently be encountered that differ from the standard list. A few of these may be so widely different as to constitute separate systems in too limited use to be considered standard. However, in most cases the nominal system voltages will differ by only a few percent as shown in table 3-3. A closer examination of the table shows that these differences are due mainly to the fact that some voltages are multiples of 110 V, others are multiples of 115 V, some are multiples of 120 V, and a few are multiples of 125 V.

The reasons for these differences go back to the original development of electric power distribution systems. The first utilization voltage was 100 V. However, the supply voltage had to be raised to 110 V in order to compensate for the voltage drop in the distribution system. This led to overvoltage on equipment connected close to the supply, so the utilization equipment

--`,,`,,`-`-`,,`,,`,`,,`---

Copyright The Institute of Electrical and Electronics Engineers, Inc.
Provided by IHS under license with IEEE
No reproduction or networking permitted without license from IHS
Not for Resale

Table 3-3—Nominal system voltages

Standard nominal system voltages	Associated nonstandard nominal system voltages
Low voltages	
120	110, 115, 125
120/240	110/220, 115/230, 125/250
208Y/120	216Y/125
240/120	
240	230, 250
480Y/277	460Y/265
480	440
600	550, 575
Medium voltages	
2400	2200, 2300
4160Y/2400	
4160	4000
4800	4600
6900	6600, 7200
8320Y/4800	11 000, 11 500
12 000Y/6930	
12 470Y/7200	
13 200Y/7620	
13 200	
13 800Y/7970	14 400
13 800	
20 780Y/12 000	
22 860Y/13 200	
23 000	
24 940Y/14 400	
34 500Y/19 920	
34 500	33 000
46 000	44 000
69 000	66 000
High voltages	
115 000	110 000, 120 000
138 000	132 000
161 000	154 000
230 000	220 000
Extra-high voltages	
345 000	
500 000	
765 000	

rating was also raised to 110 V. As generator sizes increased and distribution and transmission systems developed, an effort to keep transformer ratios in round numbers led to a series of utilization voltages of 110, 220, 440, and 550 V, a series of primary distribution voltages of 2200, 4400, 6600, and 13 200 V, and a series of transmission voltages of 22 000, 33 000, 44 000, 66 000, 110 000, 132 000, and 220 000 V.

Copyright The Institute of Electrical and Electronics Engineers, Inc.
Provided by IHS under license with IEEE
No reproduction or networking permitted without license from IHS Not for Resale

As a result of the effort to maintain the supply voltage slightly above the utilization voltage, the supply voltages were raised again to multiples of 115 V, which resulted in a new series of utilization voltages of 115, 230, 460, and 575 V, a new series of primary distribution voltages of 2300, 4600, 6900, and 13 800 V, and a new series of transmission voltages of 23 000, 34 500, 46 000, 69 000, 115 000, 138 000, and 230 000 V.

As a result of continued problems with the operation of voltage-sensitive lighting equipment and voltage-insensitive motors on the same system, and the development of the 208Y/120 V network system, the supply voltages were raised again to multiples of 120 V. This resulted in a new series of utilization voltages of 120, 208Y/120, 240, 480, and 600 V, and a new series of primary distribution voltages of 2400, 4160Y/2400, 4800, 12 000, and 12 470Y/7200 V. However, most of the existing primary distribution voltages continued in use and no 120 V multiple voltages developed at the transmission level.

3.2.7 Standard nominal system voltages in the United States

The nominal system voltages listed in the left-hand column of table 3-3 are designated as standard nominal system voltages in the United States by ANSI C84.1-1989. In addition, those shown in boldface type in table 3-1 are designated as preferred standards to provide a long-range plan for reducing the multiplicity of voltages.

In the case of utilization voltages of 600 V and below, the associated nominal system voltages in the right-hand column are obsolete and should not be used. Where possible, manufacturers are encouraged to design utilization equipment to provide acceptable performance within the utilization voltage tolerance limits specified in the standard. Some numbers listed in the right-hand column are used in equipment ratings, but these should not be confused with the numbers designating the nominal system voltage on which the equipment is designed to operate.

In the case of primary distribution voltages, the numbers in the right-hand column may designate an older system in which the voltage tolerance limits are maintained at a different level than the standard nominal system voltage, and special consideration should be given to the distribution transformer ratios, taps, and tap settings.

3.2.8 Use of distribution transformer taps to shift utilization voltage spread band

Power and distribution transformers often have four taps on the primary winding in 2½% steps. These taps are generally +5%, +2½%, nominal, –2½%, and –5%. These taps allow users to change the transformer ratio and raise or lower the secondary voltage to provide a closer fit to the tolerance limits of the utilization equipment. There are three situations requiring the use of taps:

a) Taps are required when the primary voltage has a nominal value that is slightly different from the transformer primary nameplate rating. For example, if a 13 200–480 V transformer is connected to a nominal 13 800 V system, the nominal secondary voltage would be (13 800/13 200) · 480 = 502 V. However, if the 13 800 V system were connected to the +5% tap of the 13 200–480 V transformer at 13 860 V, the nominal

Copyright The Institute of Electrical and Electronics Engineers, Inc.
Provided by IHS under license with IEEE
No reproduction or networking permitted without license from IHS
Not for Resale

secondary voltage would be (13 800/13 860) · 480 = 478, which is practically the same as would be obtained from a transformer having the proper ratio of 13 800–480 V.

b) Taps are required when the primary voltage spread is in the upper or lower portion of the tolerance limits provided in ANSI C84.1-1989. For example, a 13 200–480 V transformer is connected to a 13 200 V primary distribution system close to the substation where the primary voltage spread band stays in the upper half of the tolerance zone for range A, or 13 200–13 860 V. This would result in a nominal secondary voltage under no-load conditions of 480 to 504 V. By setting the transformer on the +2½% tap at 13 530 V, the no-load secondary voltage would be lowered 2½% to a range of 468–491 V.

c) Taps are required to adjust the utilization voltage spread band to provide a closer fit to the tolerance limits of the utilization equipment. For example, table 3-4 shows the shift in the utilization voltage spread band for the +2½% and 5% taps as compared to the utilization voltage tolerance limits for range A of ANSI C84.1-1989 for the 480 V system. Table 3-5 shows the voltage tolerance limits of standard 460 V and 440 V three-phase induction motors. Table 3-6 shows the tolerance limits for standard 277 V and 265 V fluorescent lamp ballasts. A study of these three tables shows that a tap setting of nominal will provide the best fit with the tolerance limits of the 460 V motor and the 277 V ballast, but a setting on the +5% tap will provide the best fit for the 440 V motor and the 265 V ballast. For buildings having appreciable numbers of both ratings of motors and ballasts, a setting on the +2½% tap may provide the best compromise.

Table 3-4—Tolerance limits for lighting circuits from table 3-1, range A, in volts

Nominal system voltage (volts)	Transformer tap	Minimum utilization voltage (volts)	Maximum utilization voltage (volts)
480Y/277	Nominal	440Y/254	500Y/288
468Y/270	+ 2½%	429Y/248	488Y/281
456Y/263	+ 5%	418Y/241	475Y/274

Table 3-5—Tolerance limits for low-voltage three-phase motors, in volts

Motor rating (volts)	–10%	+10%
460	414	506
440	396	484

Copyright The Institute of Electrical and Electronics Engineers, Inc.
Provided by IHS under license with IEEE
No reproduction or networking permitted without license from IHS Not for Resale

Table 3-6—Tolerance limits for low-voltage standard fluorescent lamp ballasts, in volts

Ballast rating (volts)	Minimum –10%	Maximum +10%
277	254	289
120	110	125

Note that these examples assume that the tolerance limits of the supply and utilization voltages are within the tolerance limits specified in ANSI C84.1-1989. This may not be true, so the actual voltages should be recorded over a time period that provides voltage readings during the night and over weekends when maximum voltages often occur. These actual voltages can then be used to calculate voltage profiles similar to figure 3-4 to check the proposed transformer ratios and tap settings. If transformer taps are used to compensate for voltage drop, the voltage profile should be calculated for light-load periods to check for possible overvoltage situations.

Where a plant has not yet been built, the supplying utility should be requested to provide the expected spread band for the supply voltage, preferably supported by a seven-day graphic chart from the nearest available location. If the plant furnishes the distribution transformers, recommendations should also be obtained from the supplying utility on the transformer ratios, taps, and tap settings. With this information, a voltage profile can be prepared to check the expected voltage spread at the utilization equipment.

Where the supplying utility offers a voltage over 600 V that differs from the standard nominal voltages listed in ANSI C84.1-1989, the supplying utility should be asked to furnish the expected tolerance limits of the supply voltage, preferably supported by seven or more days of voltage recordings from a nearby location. The supplying utility should also be asked for the recommended distribution transformer ratio and tap settings to obtain a satisfactory utilization voltage range. With this information, a voltage profile for the supply voltage and utilization voltage limits can be constructed for comparison with the tolerance limits of utilization equipment. If the supply voltage offered by the utility is one of the associated nominal system voltages listed in table 1-1, the taps on a standard distribution transformer will generally be sufficient to adjust the distribution transformer ratio to provide a satisfactory utilization voltage range.

Taps are on the primary side of transformers. Therefore, raising the tap setting to +2½% increases the transformer ratio by 2½% and lowers the secondary voltage spread band by 2½% minus the voltage drop in the transformer. Taps only serve to move the secondary voltage spread band up or down in the steps of the taps. They cannot correct for excessive spread from the supply voltage or from excessive drop in the plant wiring system. If the voltage spread band at the utilization equipment falls outside the satisfactory operating range of the equipment, then action must be taken to improve voltage conditions by other means (see 3.7).

Copyright The Institute of Electrical and Electronics Engineers, Inc.
Provided by IHS under license with IEEE
No reproduction or networking permitted without license from IHS
Not for Resale

In general, transformers should be selected with the same primary nameplate voltage rating as the nominal voltage of the primary supply system, and the same secondary voltage rating as the nominal voltage of the secondary system. Taps should be provided at +2½% and +5% and at –2½% and –5% to allow for adjustment in either direction.

3.3 Voltage selection

3.3.1 Selection of low-voltage utilization voltages

The preferred utilization voltage for industrial plants is 480Y/277 V. Three-phase power and other 480 V loads are connected directly to the system at 480 V, and gaseous discharge lighting is connected phase-to-neutral at 277 V. Small dry-type transformers rated 480–208Y/120 V are used to provide 120 V, single-phase, for convenience outlets, and 208 V, single-phase and three-phase, for small tools and other machinery. Where requirements are limited to 120 or 240 V, single-phase, 480–120/240 V single-phase transformers may be used. However, single-phase transformers should be connected in sequence to the individual phases in order to keep the load on each phase balanced (see 3.8).

For small industrial plants supplied at utilization voltage by a single distribution transformer, the choice of voltages is limited to those the utility will supply. However, most utilities will supply most of the standard nominal voltages listed in ANSI C84.1-1989 with the exception of 600 V, although all voltages supplied may not be available at every location. The built-up downtown areas of most large cities are supplied from secondary networks. Originally only 208Y/120 V was available, but most utilities now provide spot networks at 480Y/277 V for large installations.

3.3.2 Utility service supplied from a medium-voltage primary distribution line

Industrial plants too large for utilization voltage supply from one distribution transformer, normally furnished by the utility and located outdoors, generally require a tap from the primary distribution line. The plant constructs a primary distribution system from this tap to supply distribution transformers, which are generally dry-type with solid cast or resin-encapsulated windings, less flammable liquid, or nonflammable fluid suitable for indoor installation. Generally these distribution transformers are combined with primary and secondary switching and protective equipment to become unit substations. They are designated as primary unit substations when the secondary voltage is over 1000 V and secondary unit substations when the secondary voltage is 1000 V and below. Primary distribution may also be used to supply large industrial plants or plants involving more than one building. In this case, the primary distribution line may be run overhead or underground and may supply distribution transformers located outside the building or unit substations inside the building.

Original primary distribution voltages were limited to the range from 2400 to 14 400 V, but the increase in load densities in recent years has forced many utilities to limit expansion of primary distribution voltages below 15 000 V and to begin converting transmission voltages in the range from 15 000 to 50 000 V (sometimes called subtransmission voltages) to primary

--`,,`,,`-`-`,,`,,`,`,,`---

Copyright The Institute of Electrical and Electronics Engineers, Inc.
Provided by IHS under license with IEEE
No reproduction or networking permitted without license from IHS Not for Resale

distribution. ANSI C84.1-1989 provides tolerance limits for primary supply voltages up through 34 500 V. IEEE Std C57.12.20-1988 lists overhead distribution transformers for primary voltages up through 69 000 V.

In case an industrial plant, supplied at utilization voltage from a single primary distribution transformer, contemplates an expansion that cannot be supplied from the existing transformer, a changeover to primary distribution will be required, unless a separate supply to the new addition is permitted by the local electrical code enforcing authority and the higher cost resulting from separate bills from the utility is acceptable. In any case, the proposed expansion needs to be discussed with the supplying utility to determine whether the expansion can be supplied from the existing primary distribution system or whether the entire load can be transferred to another system. Any utility charges and the plant costs associated with the changes need to be clearly established.

In general, primary distribution voltages between 15 000 and 25 000 V can be brought into a plant and handled like the lower voltages. Primary distribution voltages from 25 000–35 000 V will require at least a preliminary economic study to determine whether they can be brought into the plant or transformed to a lower primary distribution voltage. Voltages above 35 000 V will require transformation to a lower voltage.

In most cases, plants with loads of less than 10 000 kVA will find that 4160 V is the most economical plant primary distribution voltage, and plants with loads over 20 000 kVA will find 13 800 V the most economical considering only the cost of the plant wiring and transformers. If the utility supplies a voltage in the range from 12 000–15 000 V, a transformation down to 4160 V at plant expense cannot normally be justified. For loads of 10 000–20 000 kVA, an economic study including consideration of the costs of future expansion needs to be made to determine the most economical primary distribution voltage.

Where overhead lines are permissible on plant property, an overhead primary distribution system may be built around the outside of the building or to separate buildings to supply utility-type outdoor equipment and transformers. This system is especially economical at voltages over 15 000 V.

Care must be taken to be sure the transformer types and installation methods are compatible with National Electrical Code (NEC) (ANSI/NFPA 70-1993) requirements, fire insurance rules, and environmental considerations. A number of transformer types are available up to 40 000 V. Appropriate installation methods can be made to satisfy insurers and code-enforcing authorities.

Utility primary distribution systems are almost always solidly grounded wye systems, and the neutral is often carried throughout. This grounding method and other factors must be adapted to the plant distribution system if the utility distribution voltage supplies the plant without transformers and without grounding methods specifically dedicated to that plant.

Copyright The Institute of Electrical and Electronics Engineers, Inc.
Provided by IHS under license with IEEE
No reproduction or networking permitted without license from IHS
Not for Resale

3.3.3 Utility service supplied from medium-voltage or high-voltage transmission lines

Voltages on transmission lines used to supply large industrial plants range from 23 000 to 230 000 V. There is an overlap with primary distribution system voltages in the range from 23 000 to 69 000 V, with voltages of 34 500 V and below tending to fall into the category of regulated primary distribution voltages and voltages above 34 500 V tending to fall into the category of unregulated transmission lines. The transmission voltage will be limited to those voltages the utility has available in the area. A substation is required to step the transmission voltage down to a primary distribution voltage to supply the distribution transformers in the plant.

3.3.3.1 Substation is supplied by the industrial plant

Most utilities have a low rate for service from unregulated transmission lines which requires the plant to provide the substation. This permits the plant designer to select the primary distribution voltage but requires the plant personnel to assume the operation and maintenance of the substation. The substation designer should obtain from the supplying utility the voltage spread on the transmission line, and recommendations on the substation transformer ratio, tap provisions, and tap setting, and whether regulation should be provided.

With this information, a voltage profile similar to figure 3-4 is obtained using the actual values for the spread band of the transmission line and the estimated maximum values for the voltage drops in the substation transformer, primary distribution system, distribution transformers, and secondary distribution system to obtain the voltage spread at the utilization equipment. If this voltage spread is not within satisfactory limits, then regulators are required in the substation, preferably by equipping the substation transformer or transformers with tap changing under load.

For plants supplied at 13 800 V, the distribution transformers or secondary unit substations should have a ratio of 13 800–480Y/277 V with two ±2½% taps. Where medium-sized motors in the 200 hp or larger range are used, a distribution transformer stepping down to 4160 V or 2400 V may be more economical than supplying these motors from the 480 V system.

For plants supplied at 4160 V, the distribution transformers or secondary unit substations should have a ratio of 4160–480Y/277 V with two ±2½% taps. Medium-sized motors of a few hundred horsepower may economically be connected directly to the 4160 V system, preferably from a separate primary distribution circuit.

3.3.3.2 Distribution substation is supplied by the utility

Most utilities have a rate for power purchased at the primary distribution voltage that is higher than the rate for service at transmission voltage because the utility provides the substation. The choice of the primary distribution voltage is limited to those supplied by the particular utility, but the utility will be responsible for keeping the limits specified for service voltages in ANSI C84.1-1989. The utility should be requested to provide recommendations

Copyright The Institute of Electrical and Electronics Engineers, Inc.
Provided by IHS under license with IEEE
No reproduction or networking permitted without license from IHS Not for Resale

for the ratio of the distribution transformers or secondary unit substations, provisions for taps, and the tap settings. With this information, a voltage profile similar to figure 3-4 can be constructed using the estimated maximum values for the voltage drops in the primary distribution system, the transformers, and the secondary distribution system to make sure that the utilization voltages fall within satisfactory limits.

3.4 Voltage ratings for low-voltage utilization equipment

Utilization equipment is defined as electric equipment that uses electric power by converting it into some other form of energy such as light, heat, or mechanical motion. Every item of utilization equipment is required to have, among other things, a nameplate listing the nominal supply voltage for which the equipment is designed. With one major exception, most utilization equipment carries a nameplate rating that is the same as the voltage system on which it is to be used; that is, equipment to be used on 120 V systems is rated 120 V (except for a few small appliances rated 117 or 118 V), for 208 V systems, 208 V, and so on. The major exception is motors and equipment containing motors. These are also about the only utilization equipment used on systems over 600 V. Single-phase motors for use on 120 V systems have been rated 115 V for many years. Single-phase motors for use on 208 V single-phase systems are rated 200 V and for use on 240 V single-phase systems are rated 230 V.

Prior to the late 1960s, low-voltage three-phase motors were rated 220 V for use on both 208 and 240 V systems, 440 V for use on 480 V systems, and 550 V for use on 600 V systems. The reason was that most three-phase motors were used in large industrial plants where relatively long circuits resulted in voltages considerably below nominal at the ends of the circuits. Also, utility supply systems had limited capacity and low voltages were common during heavy-load periods. As a result, the average voltage applied to three-phase motors approximated the 220, 440, and 550 V nameplate ratings.

In recent years, supplying electric utilities have made extensive changes to higher distribution voltages. Increased load density has resulted in shorter primary distribution systems. Distribution transformers have been moved inside buildings to be closer to the load. Lower impedance wiring systems have been used in the secondary distribution system. Capacitors have been used to improve power factors. All of these changes have contributed to reducing the voltage drop in the distribution system which raised the voltage applied to utilization equipment. By the mid-1960s, surveys indicated that the average voltage supplied to 440 V motors on 480 V systems was 460 V, and there were increasing numbers of complaints of overvoltages as high as 500 V during light-load periods.

At about the same time, the Motor and Generator Committee of the National Electrical Manufacturers Association (NEMA) decided that the improvements in motor design and insulation systems would allow a reduction of two frame sizes for standard induction motors rated 600 V and below. However, the motor voltage tolerance would be limited to ±10% of the nameplate rating. As a result, the nameplate voltage rating of the new motor designated as the T-frame motor was raised from the 220/440 V rating of the U-frame motor to 230/460 V. Subsequently, a motor rated 200 V for use on 208 V systems was added to the program. Table 3-7 shows the nameplate voltage ratings of standard induction motors, as specified in NEMA MG 1-1978.

Copyright The Institute of Electrical and Electronics Engineers, Inc.
Provided by IHS under license with IEEE
No reproduction or networking permitted without license from IHS
Not for Resale

Table 3-7—Nameplate voltage ratings of standard induction motors

Nominal system voltage	Nameplate voltage
Single-phase motors	
120	115
240	230
Three-phase motors	
208	200
240	230
480	460
600	575
2400	2300
4160	4000
4800	4600
6900	6600
13 800	13 200

The question has been raised why the confusion between equipment ratings and system nominal voltage cannot be eliminated by making the nameplate rating of utilization equipment the same as the nominal voltage of the system on which the equipment is to be used. However, manufacturers say that the performance guarantee for utilization equipment is based on the nameplate rating and not the system nominal voltage. For utilization equipment such as motors where the performance peaks in the middle of the tolerance range of the equipment, better performance can be obtained over the tolerance range specified in ANSI C84.1-1989 by selecting a nameplate rating closer to the middle of this tolerance range.

3.5 Effect of voltage variations on low-voltage and medium-voltage utilization equipment

3.5.1 General effects

When the voltage at the terminals of utilization equipment deviates from the value on the nameplate of the equipment, the performance and the operating life of the equipment are affected. The effect may be minor or serious depending on the characteristics of the equipment and the amount of the voltage deviation from the nameplate rating. Generally, performance conforms to the utilization voltage limits specified in ANSI C84.1-1989, but it may vary for specific items of voltage-sensitive equipment. In addition, closer voltage control may be required for precise operations.

3.5.2 Induction motors

The variation in characteristics as a function of the applied voltage is given in table 3-8. Motor voltages below nameplate rating result in reduced starting torque and increased full-load temperature rise. Motor voltages above nameplate rating result in increased torque,

--`,,`,,`-`-`,,`,,`,`,,`---

Copyright The Institute of Electrical and Electronics Engineers, Inc.
Provided by IHS under license with IEEE
No reproduction or networking permitted without license from IHS Not for Resale

increased starting current, and decreased power factor. The increased starting torque will increase the accelerating forces on couplings and driven equipment. Increased starting current causes greater voltage drop in the supply circuit and increases the voltage dip on lamps and other equipment. In general, voltages slightly above nameplate rating have less detrimental effect on motor performance than voltages slightly below nameplate rating.

Table 3-8—General effect of voltage variations on induction-motor characteristics

Characteristic	Proportional to	Voltage variation	
		90% of nameplate	110% of nameplate
Starting and maximum running torque	Voltage squared	–19%	+21%
Percent slip	$(1/\text{voltage})^2$	+23%	–19%
Full load speed	Synchronous speed—slip	–0.2 to –1.0%	+0.2 to 1.0%
Starting current	Voltage	–10%	+10%
Full load current	Varies with design	+5 to +10%	–5 to –10%
No load current	Varies with design	–10 to –30%	+10 to +30%
Temperature rise	Varies with design	+10 to +15%	–10 to –15%
Full load efficiency	Varies with design	–1 to –3%	+1 to +3%
Full load power factor	Varies with design	+3 to +7%	–2 to –7%
Magnetic noise	Varies with design	Slight decrease	Slight increase

3.5.3 Synchronous motors

Synchronous motors are affected in the same manner as induction motors, except that the speed remains constant (unless the frequency changes) and the maximum or pull-out torque varies directly with the voltage if the field voltage remains constant, as in the case where the field is supplied by a generator on the same shaft with the motor. If the field voltage varies with the line voltage as in the case of a static rectifier source, then the maximum or pull-out torque varies as the square of the voltage.

Copyright The Institute of Electrical and Electronics Engineers, Inc.
Provided by IHS under license with IEEE
No reproduction or networking permitted without license from IHS
Not for Resale

3.5.4 Incandescent lamps

The light output and life of incandescent filament lamps are critically affected by the impressed voltage. The variation of life and light output with voltage is given in table 3-9. The figures for 125 V and 130 V lamps are also included because these ratings are useful in signs and other locations where long life is more important than light output.

Table 3-9—Effect of voltage variations on incandescent lamps

Applied voltage (volts)	Lamp Rating					
	120 V		125 V		130 V	
	% life	% light	% life	% light	% life	% light
105	575	64	880	55	—	—
110	310	74	525	65	880	57
115	175	87	295	76	500	66
120	100	100	170	88	280	76
125	58	118	100	100	165	88
130	34	132	59	113	100	100

3.5.5 Fluorescent lamps

Light output for magnetic ballasts varies approximately in direct proportion to the applied voltage. Thus a 1% increase in applied voltage will increase the light output by 1% and, conversely, a decrease of 1% in the applied voltage will reduce the light output by 1%. Light output for electronic ballasts may be more or less dependent on input voltage. Consult with the manufacturer for the information specific to a particular ballast. The life of fluorescent lamps is affected less by voltage variation than that of incandescent lamps.

The voltage-sensitive component of the fluorescent fixture is the ballast. It is a small reactor, transformer, electronic circuit, or combination that supplies the starting and operating voltages to the lamp and limits the lamp current to design values. These ballasts may overheat when subjected to above-normal voltage and operating temperature, and ballasts with integral thermal protection may be required. See NEC, Article 410.

3.5.6 High-intensity discharge (HID) lamps (mercury, sodium, and metal halide)

Mercury lamps using a typical reactor ballast will have a 12% change in light output for a 5% change in terminal voltage. HID lamps may extinguish when the terminal voltage drops

Copyright The Institute of Electrical and Electronics Engineers, Inc.
Provided by IHS under license with IEEE
No reproduction or networking permitted without license from IHS Not for Resale

below 75% of rated voltage. A constant wattage autotransformer ballast will produce a ±5% change in lamp wattage for mercury or a ±10% change in wattage for metal halide, when the line voltage varies ±10%.

Approximate warm-up and restrike times for HID lamps are as follows:

Light source	Warm-up	Re-strike
Mercury vapor	5 to 7 min	3 to 6 min
Metal halide	2 to 5 min	10 to 20 min
High-pressure sodium	3 to 4 min	0.5 to 1 min
Low-pressure sodium	7 to 10 min	1.2 s to 5 min

The lamp life is related inversely to the number of starts so that, if low-voltage conditions require repeated starting, lamp life will be reduced. Excessively high voltage raises the arc temperature, which could damage the glass enclosure if the temperature approaches the glass softening point. See the manufacturers' catalogs for detailed information.

3.5.7 Infrared heating processes

Although the filaments in the lamps used in these installations are of the resistance type, the energy output does not vary with the square of the voltage because the resistance varies at the same time. The energy output varies slightly less than the square of the voltage. Voltage variations can produce unwanted changes in the process heat available unless thermostatic control or other regulating means is used.

3.5.8 Resistance heating devices

The energy input and, therefore, the heat output of resistance heaters varies approximately as the square of the impressed voltage. Thus a 10% drop in voltage will cause a drop of approximately 19% in heat output. This, however, holds true only for an operating range over which the resistance remains essentially constant.

3.5.9 Electron tubes

Electron tubes are rarely specified in new equipment except for special applications. The current-carrying ability or emission of all electron tubes is affected seriously by voltage deviation from nameplate rating. The cathode life curve indicates that the life is reduced by half for each 5% increase in cathode voltage. This is due to the reduced life of the heater element and to the higher rate of evaporation of the active material from the surface of the cathode. It is extremely important that the cathode voltage be kept near rating on electron tubes for satisfactory service. In many cases this will necessitate a regulated power source. This may be located at or within the equipment, and often consists of a regulating transformer having constant output voltage or current.

Copyright The Institute of Electrical and Electronics Engineers, Inc.
Provided by IHS under license with IEEE
No reproduction or networking permitted without license from IHS
Not for Resale

3.5.10 Capacitors

The reactive power output of capacitors varies with the square of the impressed voltage. A drop of 10% in the supply voltage, therefore, reduces the reactive power output by 19%, and where the user has made a sizable investment in capacitors for power factor improvement, the user loses the benefit of almost 20% of this investment.

3.5.11 Solenoid-operated devices

The pull of ac solenoids varies approximately as the square of the voltage. In general, solenoids are designed to operate satisfactorily on 10% overvoltage and 15% undervoltage.

3.5.12 Solid-state equipment

Thyristors, transistors, and other solid-state devices have no thermionic heaters. Thus they are not nearly as sensitive to long-time voltage variations as the electron tube components they are largely replacing. Internal voltage regulators are frequently provided for sensitive equipment such that it is independent of supply system regulation. This equipment as well as power solid-state equipment is, however, generally limited regarding peak reverse voltage, since it can be adversely affected by abnormal voltages of even microsecond duration. An individual study of the maximum voltage of the equipment, including surge characteristics, is necessary to determine the effect of maximum system voltage or whether abnormally low voltage will result in malfunction.

3.6 Voltage drop considerations in locating the low-voltage secondary distribution system power source

One of the major factors in the design of the secondary distribution system is the location of the power source as close as possible to the center of the load. This applies in every case, from a service drop from a distribution transformer on the street to a distribution transformer located outside the building or a secondary unit substation located inside the building. Frequently building esthetics or available space require the secondary distribution system power supply to be installed in a corner of a building without regard to what this adds to the cost of the building wiring to keep the voltage drop within satisfactory limits.

Figure 3-6 shows that if a power supply is located in the center of a horizontal floor area at point 0, the area that can be supplied from circuits run radially from point 0 with specified circuit constants, and voltage drop would be the area enclosed by the circle of radius 0-X. However, conduit systems are run in rectangular coordinates so, with this restriction, the area that can be supplied is reduced to the square X-Y-X'-Y' when the conduit system is run parallel to the axes X-X' and Y-Y'. But the limits of the square are not parallel to the conduit system. Thus, to fit the conduit system into a square building with walls parallel to the conduit system, the area must be reduced to F-H-B-D.

If the supply point is moved to the center of one side of the building, which is a frequent situation when the transformer is placed outside the building, the area that can be served with the

Copyright The Institute of Electrical and Electronics Engineers, Inc.
Provided by IHS under license with IEEE
No reproduction or networking permitted without license from IHS Not for Resale

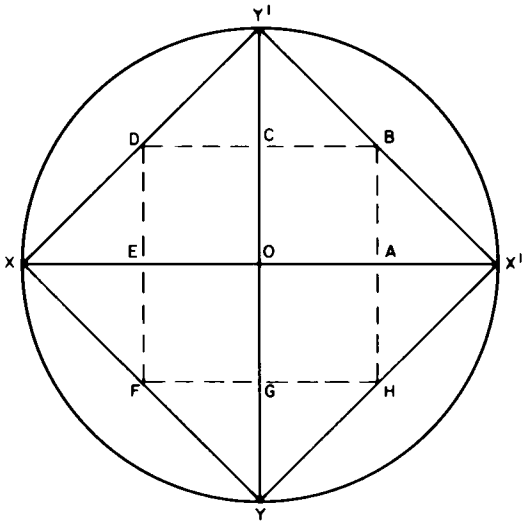

Source: [B11]

Figure 3-6—Effect of secondary distribution system power source location on area that can be supplied under specified voltage drop limits

specified voltage drop and specified circuit constants is E-A-B-D. If the supply station is moved to a corner of the building—a frequent location for buildings supplied from the rear or from the street—the area is reduced to O-A-B-C.

Every effort should be made to place the secondary distribution system supply point as close as possible to the center of the load area. Note that this study is based on a horizontal wiring system and any vertical components must be deducted to establish the limits of the horizontal area that can be supplied.

Using an average value of 30 ft/V drop for a fully loaded conductor, which is a good average figure for the conductor sizes normally used for feeders, the distances in figure 3-6 for 5% and 2½% voltage drops are shown in table 3-10. For a distributed load, the distances will be approximately twice the values shown.

3.7 Improvement of voltage conditions

Poor equipment performance, overheating, nuisance tripping of overcurrent protective devices, and excessive burnouts are signs of unsatisfactory voltage. Abnormally low voltage occurs at the end of long circuits. Abnormally high voltage occurs at the beginning of circuits close to the source of supply, especially under lightly loaded conditions such as at night and over weekends.

Copyright The Institute of Electrical and Electronics Engineers, Inc.
Provided by IHS under license with IEEE
No reproduction or networking permitted without license from IHS
Not for Resale

Table 3-10—Areas that can be supplied for specific voltage drops and voltages at various secondary distribution system power source locations

Nominal system voltage (volts)	Distance (feet)			
	5% voltage drop		2½% voltage drop	
	0-X	0-A	0-X	0-A
120/240	360	180	180	90
208	312	156	156	78
240	360	180	180	90
480	720	360	360	180

In cases of abnormally low voltage, the first step is to make a load survey to measure the current taken by the affected equipment, the current in the circuit supplying the equipment, and the current being supplied by the supply source under peak-load conditions to make sure that the abnormally low voltage is not due to overloaded equipment. If the abnormally low voltage is due to overload, then corrective action is required to relieve the overloaded equipment.

If overload is ruled out or if the utilization voltage is excessively high, a voltage survey should be made, preferably by using graphic voltmeters, to determine the voltage spread at the utilization equipment under all load conditions and the voltage spread at the utility supply. This survey can be compared with ANSI C84.1-1989 to determine if the unsatisfactory voltage is caused by the plant distribution system or the utility supply. If the utility supply exceeds the tolerance limits specified in ANSI C84.1-1989, the utility should be notified. If the industrial plant is supplied at a transmission voltage and furnishes the distribution substation, the operation of the voltage regulators should be checked.

If excessively low voltage is caused by excessive voltage drop in the plant wiring (over 5%), then plant wiring changes are required to reduce the voltage drop. If the load power factor is low, capacitors may be installed to improve the power factor and reduce the voltage drop. Where the excessively low voltage affects a large area, the best solution may be conversion to primary distribution if the building is supplied from a single distribution transformer, or to install an additional distribution transformer in the center of the affected area if the plant has primary distribution. Plants wired at 208Y/120 or 240 V may be changed over economically to 480Y/277 V if an appreciable portion of the wiring system is rated 600 V and motors are dual rated 220:440 V or 230:460 V.

Copyright The Institute of Electrical and Electronics Engineers, Inc.
Provided by IHS under license with IEEE
No reproduction or networking permitted without license from IHS Not for Resale

3.8 Phase-voltage unbalance in three-phase systems

3.8.1 Causes of phase-voltage unbalance

Most utilities use four-wire grounded-wye primary distribution systems so that single-phase distribution transformers can be connected phase-to-neutral to supply single-phase loads, such as residences and street lights. Variations in single-phase loading cause the currents in the three-phase conductors to be different, producing different voltage drops and causing the phase voltages to become unbalanced. Normally the maximum phase-voltage unbalance will occur at the end of the primary distribution system, but the actual amount will depend on how well the single-phase loads are balanced between the phases on the system.

Perfect balance can never be maintained because the loads are continually changing, causing the phase-voltage unbalance to vary continually. Blown fuses on three-phase capacitor banks will also unbalance the load and cause phase-voltage unbalance.

Industrial plants make extensive use of 480Y/277 V utilization voltage to supply lighting loads connected phase-to-neutral. Proper balancing of single-phase loads among the three phases on both branch circuits and feeders is necessary to keep the load unbalance and the corresponding phase-voltage unbalance within reasonable limits.

3.8.2 Measurement of phase-voltage unbalance

The simplest method of expressing the phase-voltage unbalance is to measure the voltages in each of the three phases:

The amount of voltage unbalance is better expressed in symmetrical components as the negative sequence component of the voltage:

$$\text{percent unbalance} = \frac{\text{maximum deviation from average}}{\text{average}} \cdot 100$$

$$\text{voltage unbalance factor} = \frac{\text{negative-sequence voltage}}{\text{positive-sequence voltage}}$$

3.8.3 Effect of phase-voltage unbalance

When unbalanced phase voltages are applied to three-phase motors, the phase-voltage unbalance causes additional negative-sequence currents to circulate in the motor, increasing the heat losses primarily in the rotor. The most severe condition occurs when one phase is opened and the motor runs on single-phase power. Figure 3-7 shows the recommended derating for motors as a function of percent phase-voltage unbalance. Linders, 1971 [B7],[2] provides a more comprehensive review of the effects of unbalance on motors.

[2]The numbers in brackets preceded by the letter B correspond to those of the bibliography in 3.13.

Copyright The Institute of Electrical and Electronics Engineers, Inc.
Provided by IHS under license with IEEE
No reproduction or networking permitted without license from IHS
Not for Resale

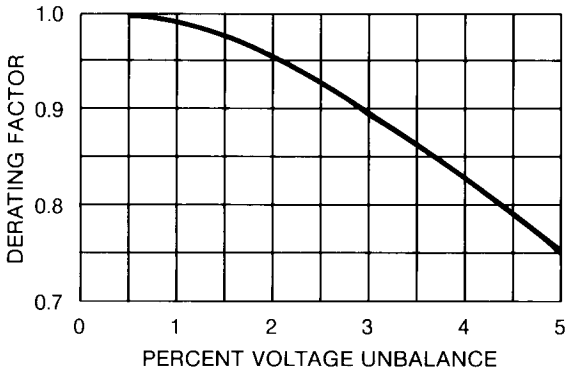

Source: NEMA MG 1-1993.

Figure 3-7—Derating factor for motors operating with phase voltage unbalance

Although there will generally be an increase in the motor load current when the phase voltages are unbalanced, the increase is insufficient to indicate the actual temperature rise that occurs because NEMA current-responsive thermal or magnetic overload devices only provide a trip characteristic that correlates with the motor thermal damage due to normal overload current (positive-sequence) and not negative-sequence current.

All motors are sensitive to phase-voltage unbalance, but hermetic compressor motors used in air conditioners are most susceptible to this condition. These motors operate with higher current densities in the windings because of the added cooling effect of the refrigerant. Thus the same percent increase in the heat loss due to circulating currents, caused by phase-voltage unbalance, will have a greater effect on the hermetic compressor motor than it will on a standard air-cooled motor.

Since the windings in hermetic compressor motors are inaccessible, they are normally protected by thermally operated switches embedded in the windings, set to open and disconnect the motor when the winding temperature exceeds the set value. The motor cannot be restarted until the winding has cooled down to the point at which the thermal switch will reclose.

When a motor trips out, the first step in determining the cause is to check the running current after it has been restarted to make sure that the motor is not overloaded. The next step is to measure the three-phase voltages to determine the amount of phase-voltage unbalance. Figure 3-7 indicates that where the phase-voltage unbalance exceeds 2%, the motor is likely to become overheated if it is operating close to full load.

Copyright The Institute of Electrical and Electronics Engineers, Inc.
Provided by IHS under license with IEEE
No reproduction or networking permitted without license from IHS Not for Resale

Some electronic equipment, such as computers, may also be affected by phase-voltage unbalance of more than 2 or 2½%. The equipment manufacturer can supply the necessary information.

In general, single-phase loads should not be connected to three-phase circuits supplying equipment sensitive to phase-voltage unbalance. A separate circuit should be used to supply this equipment.

3.9 Voltage sags and flicker

The previous discussion has covered the relatively slow changes in voltage associated with steady-state voltage spreads and tolerance limits. However, sudden voltage changes should be given special consideration.

Lighting equipment output is sensitive to applied voltage, and people are sensitive to sudden illumination changes. A voltage change of 0.25 to 0.5% will cause a noticeable reduction in the light output of an incandescent lamp and a less noticeable reduction in the light output of HID lighting equipment. Intermittent equipment operation such as welders, motor starting, and arc furnaces can affect the voltage supplied to lighting equipment so much that people complain about flickering lights.

Motor starting and short circuits on nearby lines can cause lamp flicker and even large momentary voltage sags that disrupt sensitive utilization equipment. Arc furnaces and welders can cause voltage flicker that occurs several times a second. This produces a stroboscopic effect and can be particularly irritating to people.

Care should be taken to design systems that will not irritate people with flickering lights and that will not disrupt important industrial and commercial processes.

3.9.1 Motor starting voltage sags

Motors have a high initial inrush current when turned on and impose a heavy load at a low power factor for a very short time. This sudden increase in the current flowing to the load causes a momentary increase in the voltage drop along the distribution system, and a corresponding reduction in the voltage at the utilization equipment.

In general, the starting current of a standard motor averages about 5 times the full-load running current. The approximate values for all ac motors over ½ hp are indicated by a code letter on the nameplate of the motor. The values indicated by these code letters are given in NEMA MG 1-1978 and also in Article 430 of the NEC.

A motor requires about 1 kVA for each motor horsepower in normal operation, so the starting current of the average motor will be about 5 kVA for each motor horsepower. When the motor rating in horsepower approaches 5% of the secondary unit substation transformer capacity in kilovoltamperes, the motor starting apparent power approaches 25% of the transformer

Copyright The Institute of Electrical and Electronics Engineers, Inc.
Provided by IHS under license with IEEE
No reproduction or networking permitted without license from IHS
Not for Resale

capacity which, with a transformer impedance voltage of 6–7%, will result in a noticeable voltage sag on the order of 1%.

In addition, a similar voltage sag will occur in the wiring between the secondary unit substation and the motor when starting a motor with a full-load current which is on the order of 5% of the rated current of the circuit. This will result in a full-load voltage drop on the order of 4 or 5%. However, the voltage drop is distributed along the circuit so that maximum sag occurs only when the motor and the affected equipment are located at the far end of the circuit. As the motor is moved from the far end to the beginning of the circuit, the voltage drop in the circuit approaches zero. As the affected equipment is moved from the far end to the beginning of the circuit, the voltage dip remains constant up to the point of connection of the motor and then decreases to zero as the equipment connection approaches the beginning of the circuit.

The total voltage sag is the sum of the sag in the secondary unit substation transformer and the secondary circuit. In the case of very large motors of several hundred to a few thousand horsepower, the impedance of the supply system should be considered.

Special consideration should always be given when starting larger motors to minimize the voltage sag so as not to affect the operation of other utilization equipment on the system supplying the motor. Large motors (see table 3-11) may be supplied at medium voltage such as 2400, 4160, 6900, or 13 200 V from a separate transformer to eliminate the voltage dip on the low-voltage system. However, consideration should be given to the fact that the maintenance electricians may not be qualified to maintain medium-voltage equipment. A contract with a qualified electrical firm may be required for maintenance. Standard voltages and preferred horsepower limits for polyphase induction motors are shown in table 3-11.

Table 3-11—Standard voltages and preferred horsepower limits for polyphase induction motors

Motor nameplate voltage	Preferred horsepower limits
115 230 460 and 575	Low-voltage motors No minimum—15 hp maximum No minimum—200 hp maximum 1 hp minimum—1000 hp maximum
2300 4000 4500 6000 13 200	Medium-voltage motors 50 hp minimum—6000 hp maximum 100 hp minimum—7500 hp maximum 250 hp minimum—no maximum 400 hp minimum—no maximum 1500 hp minimum—no maximum

Source: Based on [B9], table 18-5.

--`,,`,,`-`-`,,`,,`,`,,`---

Copyright The Institute of Electrical and Electronics Engineers, Inc.
Provided by IHS under license with IEEE
No reproduction or networking permitted without license from IHS Not for Resale

3.9.2 Flicker limits

Where loads are turned on and off rapidly as in the case of resistance welders, or fluctuate rapidly as in the case of arc furnaces, the rapid fluctuations in the light output of incandescent lamps, and to a lesser extent, gaseous discharge lamps, is called flicker. If utilization equipment involving rapidly fluctuating loads is on the order of 10% of the capacity of the secondary unit substation transformer and the secondary circuit, accurate calculations should be made using the actual load currents and system impedances to determine the effect on lighting equipment.

Individuals vary widely in their susceptibility to light flicker. Tests indicate that some individuals are irritated by a flicker that is barely noticeable to others. Studies show that sensitivity depends on how much the illumination changes (magnitude), how often it occurs (frequency), and the type of work activity undertaken. The problem is further compounded by the fact that fluorescent and other lighting systems have different response characteristics to voltage changes. For example, incandescent illumination changes more than fluorescent, but fluorescent illumination changes faster than incandescent. Sudden voltage changes from one cycle to the next are more noticeable than gradual changes over several cycles. Illumination flicker can be especially objectionable if it occurs often and is cyclical.

Figure 3-8 [B6] shows acceptable voltage flicker limits for incandescent lights used by a large number of utilities. Two curves show how the acceptable voltage flicker magnitude depends on the frequency of occurrence. The lower curve shows a borderline where people begin to detect flicker. The upper curve is the borderline where some people will find the flicker objectionable. At 10 per hour, people begin to detect incandescent lamp flicker for voltage fluctuations larger than 1% and begin to object when the magnitude exceeds 3%.

In using this curve, the purpose for which the lighting is provided needs to be considered. For example, lighting used for close work such as drafting requires flicker limits approaching the borderline of visibility curve. For general area lighting such as storage areas, the flicker limits may approach the borderline of the irritation curve. Note that the effect of voltage flicker depends on the frequency of occurrence. An occasional dip, even though quite large, is rarely objectionable.

When objectionable flicker occurs, either the load causing the flicker should be reduced or eliminated, or the capacity of the supply system increased to reduce the voltage drop caused by the fluctuating load. In large plants, flicker-producing equipment should be segregated on separate transformers and feeders so as not to disturb flicker-sensitive equipment.

Objectionable flicker in the supply voltage from the utility should be reported to the utility for correction. Flexibility in approach and effective communications between the customer and the utility can be invaluable in resolving potential flicker problems.

3.9.3 Fault clearing voltage sags

Solid-state controllers such as adjustable speed drives, microprocessor controllers, sensors, and other equipment are often sensitive to momentary voltage sags associated with remote

Copyright The Institute of Electrical and Electronics Engineers, Inc.
Provided by IHS under license with IEEE
No reproduction or networking permitted without license from IHS
Not for Resale

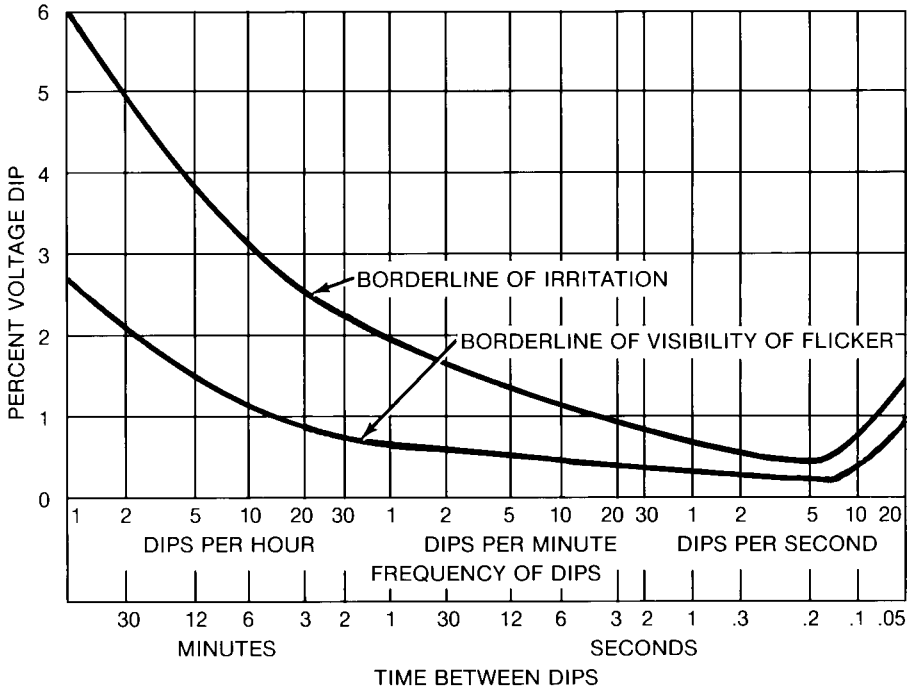

Figure 3-8—Range of observable and objectionable voltage flicker versus time

electrical short circuits. A short circuit on adjacent plant feeders, a nearby utility distribution line, or even a transmission line many miles from the sensitive load can cause a noticeable sag in voltage while short-circuit current is flowing. The voltage sag continues until the circuit breaker or other fault clearing equipment interrupts the short-circuit current. Consideration should be given to include capabilities to ride through these voltage sags for processes where sudden, unplanned shutdowns have a significant cost.

The magnitude of the voltage sag depends on the electrical location of the short circuit relative to the load. Single- and two-phase short circuits are more likely and cause different sag voltages on each phase. Generally, short circuits on only a few miles of line can cause deep voltage sags for any one site. However, there are often many miles where short circuits can cause shallow sags at the same site. This phenomena makes shallow sags many times more likely than deep sags. Figure 3-9 shows relative probabilities of occurrence compared to the lowest phase voltage when sags occur. For example, equipment that turns off at 90% of nominal voltage may experience 3.1 times more voltage sag problems than equipment that tolerates sags to 80% of nominal.

The duration of voltage sags depends upon the time required to detect and interrupt the short-circuit current. Typical minimum interruption time for medium- and high-voltage circuit breakers are 3–5 cycles at 60 Hz while older breakers may be rated for 8 cycles. Some sags

Copyright The Institute of Electrical and Electronics Engineers, Inc.
Provided by IHS under license with IEEE
No reproduction or networking permitted without license from IHS
Not for Resale

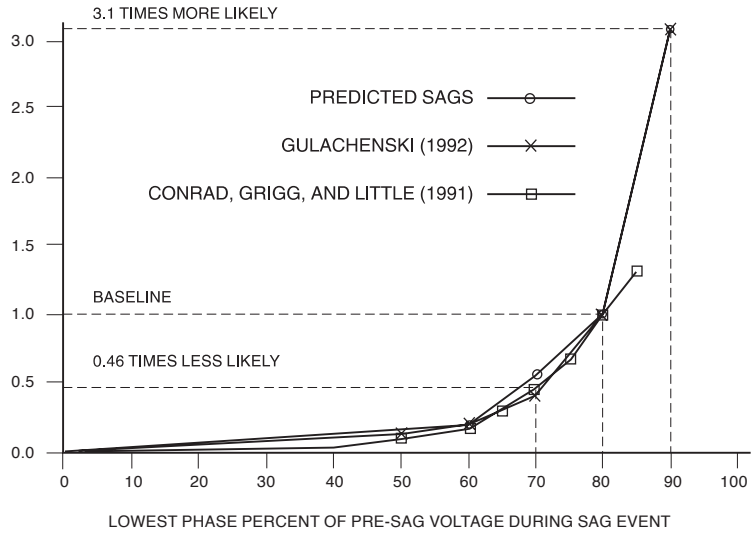

Figure 3-9—Voltage sag probabilities

last even longer because of required time delay for overcurrent coordination. Figure 3-10 shows the probability density of voltage sag duration. The three curves show that half to three quarters of the measured voltage sags had a duration less than 0.2 s.

Equipment sensitivity to voltage sags generally involves a combination of voltage magnitude and duration. Both should be considered when specifying equipment performance capabilities during voltage sags.

3.10 Harmonics

Voltage and current on the ideal ac power system have pure single frequency sine wave shapes. Real power systems have some distortion because an increasing number of loads require current that is not a pure sine wave. Single- and three-phase rectifiers, adjustable speed drives, arc furnaces, computers, and fluorescent lights are good examples.

Fourier analysis shows the waveform distortion contains higher frequency components that are integer multiples of the fundamental frequency. For a 60 Hz power system, the second harmonic would be $2 \cdot 60$ or 120 Hz and the third harmonic would be $3 \cdot 60$ or 180 Hz. These higher frequency components distort the voltage by interacting with the system impedance. Capacitor failure, premature transformer failure, neutral overloads, excessive motor heating, relay misoperation, and other problems are possible when harmonics are not properly controlled.

Copyright The Institute of Electrical and Electronics Engineers, Inc.
Provided by IHS under license with IEEE
No reproduction or networking permitted without license from IHS
Not for Resale

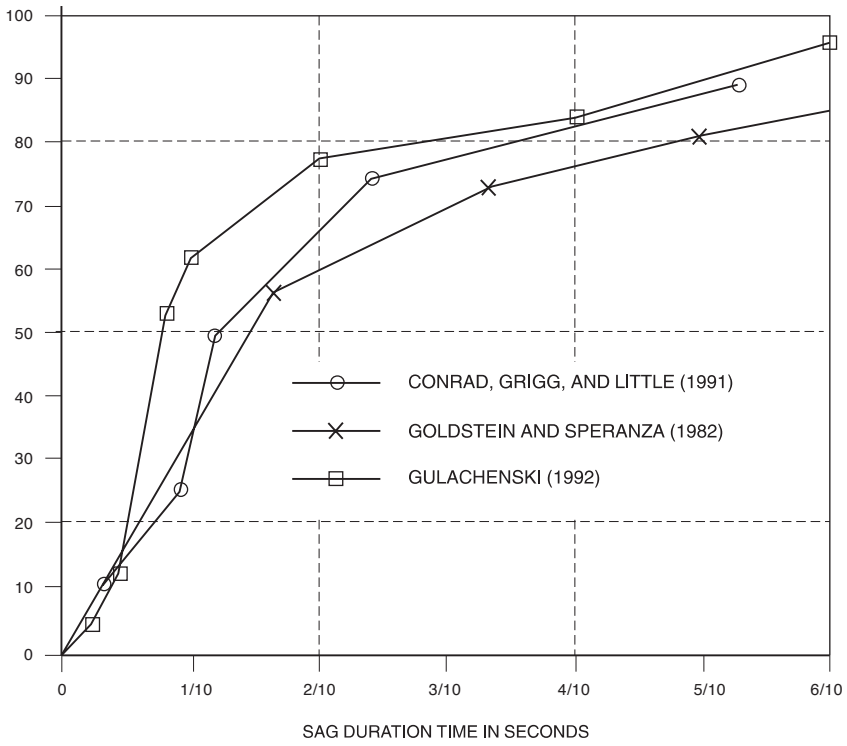

Figure 3-10—Voltage sag duration

IEEE Std 519-1992 is a recommended practice for control of harmonics in power systems. It recommends limits for supply voltage distortion and limits for allowable harmonic current demands. Chapter 9 of this book also contains more detailed information on harmonics.

3.11 Calculation of voltage drops

Building wiring designers must have a working knowledge of voltage drop calculations, not only to meet NEC requirements, but also to ensure that the voltage applied to utilization equipment is maintained within proper limits. The phasor relationships between voltage and current and resistance and reactance require a working knowledge of trigonometry, especially for making exact voltage drop computations. Fortunately, most voltage drop calculations are based on assumed limiting conditions, and approximate formulas are adequate. Also, many voltage drop computer programs are available that offer speed and accuracy.

3.11.1 General mathematical formulas

The phasor relationships between the voltage at the beginning of a circuit, the voltage drop in the circuit, and the voltage at the end of the circuit are shown in figure 3-11.

Copyright The Institute of Electrical and Electronics Engineers, Inc.
Provided by IHS under license with IEEE
No reproduction or networking permitted without license from IHS Not for Resale

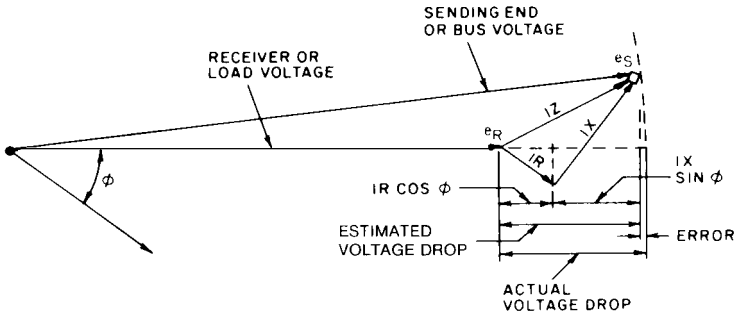

Figure 3-11—Phasor diagram of voltage relations for voltage-drop calculations

The approximate formula for the voltage drop is

$$V = IR\cos\phi + IX\sin\phi$$

where

V is the voltage drop in circuit, line to neutral
I is the current flowing in conductor
R is the line resistance for one conductor, in ohms
X is the line reactance for one conductor, in ohms
ϕ is the angle whose cosine is the load power factor
$\cos\phi$ is the load power factor, in decimals
$\sin\phi$ is the load reactive factor, in decimals

The voltage drop V obtained from this formula is the voltage drop in one conductor, one way, commonly called the line-to-neutral voltage drop. The reason for using the line-to-neutral voltage is to permit the line-to-line voltage to be computed by multiplying by the following constants:

Voltage system	Multiply by
Single-phase	2
Three-phase	1.732

In using this formula, the line current I is generally the maximum or assumed load current-carrying capacity of the conductor.

Copyright The Institute of Electrical and Electronics Engineers, Inc.
Provided by IHS under license with IEEE
No reproduction or networking permitted without license from IHS
Not for Resale

The resistance *R* is the ac resistance of the particular conductor used and of the particular type of raceway in which it is installed as obtained from the manufacturer. It depends on the size of the conductor measured in American Wire Gauge (AWG) for smaller conductors and in thousands of circular mils (kcmil) for larger conductors, the type of conductor (copper or aluminum), the temperature of the conductor (normally 75 °C for average loading and 90 °C for maximum loading), and whether the conductor is installed in magnetic (steel) or nonmagnetic (aluminum or nonmetallic) raceway. The resistance opposes the flow of current and causes the heating of the conductor.

The reactance *X* is obtained from the manufacturer. It depends on the size and material of the conductor, whether the raceway is magnetic or nonmagnetic, and on the spacing between the conductors of the circuit. The spacing is fixed for multiconductor cable but may vary with single-conductor cables so that an average value is required. Reactance occurs because the alternating current flowing in the conductor causes a magnetic field to build up and collapse around each conductor in synchronism with the alternating current. This magnetic field, as it builds up and falls radially, cuts across the conductor itself and the other conductors of the circuit, causing a voltage to be induced in each in the same way that current flowing in the primary of a transformer induces a voltage in the secondary of the transformer. Since the induced voltage is proportional to the rate of change of the magnetic field, which is maximum when the current passes through zero, the induced voltage will be a maximum when the current passes through zero, or, in vector terminology, lags the current wave by 90 degrees.

ϕ is the angle between the load voltage and the load current and is obtained by finding the power factor expressed as a decimal (1 or less) in the cosine section of a trigonometric table or by using a scientific calculator.

Cos ϕ is the power factor of the load expressed in decimals and may be used directly in the computation of $IR \cos \phi$.

Sin ϕ is obtained by finding the angle ϕ in a trigonometric table of sines or by using a calculator. By convention, sin ϕ is positive for lagging power factor loads and negative for leading power factor loads.

$IR \cos \phi$ is the resistance component of the voltage drop and $IX \sin \phi$ is the reactive component of the voltage drop.

For exact calculations, the following formula may be used:

$$\text{actual voltage drop} = e_S + IR\cos\phi + IX\sin\phi - \sqrt{e_S^2 - (IX\cos\phi - IR\sin\phi)^2}$$

where the symbols correspond to those in figure 3-11.

3.11.2 Cable voltage drop

Voltage drop tables and charts are sufficiently accurate to determine the approximate voltage drop for most problems. Table 3-12 contains four sections giving the three-phase line-to-line

Copyright The Institute of Electrical and Electronics Engineers, Inc.
Provided by IHS under license with IEEE
No reproduction or networking permitted without license from IHS Not for Resale

voltage drop for 10 000 circuit ampere-feet (A-ft) for copper and aluminum conductors in both magnetic and nonmagnetic conduit. The figures are for single-conductor cables operating at 60 ˚C. However, the figures are reasonably accurate up to a conductor temperature of 75 ˚C and for multiple-conductor cable. Although the length of cable runs over 600 V is generally too short to produce a significant voltage drop, table 3-12 may be used to obtain approximate values. For borderline cases, the exact values obtained from the manufacturer for the particular cable should be used. The resistance is the same for the same wire size, regardless of the voltage, but the thickness of the insulation is increased at the higher voltages, which increases the conductor spacing resulting in increased reactance causing increasing errors at the lower power factors. For the same reason, table 3-12 cannot be used for open-wire or other installations such as trays where there is appreciable spacing between the individual phase conductors.

In using table 3-12, the normal procedure is as follows: Find the voltage drop for 10 000 A-ft and multiply this value by the ratio of the actual number of ampere-feet to 10 000. Note that the distance in feet is the distance from the source to the load.

Example 1. 500 kcmil copper conductor in steel (magnetic) conduit; circuit length 200 ft; load 300 A at 80% power factor. What is the voltage drop?

Using Section 1 of table 3-12, the intersection between 500 kcmil and 80% power factor gives a voltage drop of 0.85 V for 10 000 A-ft.

200 ft · 300 A = 60 000 circuit A-ft
(60 000/10 000) · 0.85 = 6 · 0.85 = 5.1 V drop
voltage drop, phase-to-neutral = 0.577 · 5.1
= 2.9 V

Example 2. AWG No. 12 aluminum conductor in aluminum (nonmagnetic) conduit; circuit length 200 ft; load 10 A at 70% power factor. What is the voltage drop?

Using Section 4 of table 3-12, the intersection between AWG No. 12 aluminum conductor and 0.70 power factor is 37 V for 10 000 A-ft.

200 ft · 10 A = 200 circuit A-ft
voltage drop = (2000/10 000) · 37
= 7.4 V

Example 3. Determine the wire size in Example 2 to limit the voltage drop to 3 V. The voltage drop in 10 000 A-ft would be as follows:

(10 000/2000) · 3 = 15 V

Using Section 4 of table 3-12, move along the 0.70 power factor line to find the voltage drop not greater than 15 V. AWG No. 8 aluminum has a voltage drop of 15 V for 10 000 A-ft, so it is the smallest aluminum conductor in aluminum conduit that could be used to carry 10 A for 200 ft with a voltage drop of not more than 3 V, line-to-line.

Copyright The Institute of Electrical and Electronics Engineers, Inc.
Provided by IHS under license with IEEE
No reproduction or networking permitted without license from IHS
Not for Resale

Copyright The Institute of Electrical and Electronics Engineers, Inc.
Provided by IHS under license with IEEE
No reproduction or networking permitted without license from IHS

Table 3-12—Three-phase line-to-line voltage drop for 600 V single-conductor cable per 10 000 A-ft (60 °C conductor temperature, 60 Hz)

Load power factor lagging	Wire size (AWG or kcmil)																					
	1000	900	800	750	700	600	500	400	350	300	250	4/0	3/0	2/0	1/0	1	2	4	6	8*	10*	12*	14*
Section 1: Copper conductors in magnetic conduit																							
1.00	0.28	0.31	0.34	0.35	0.37	0.42	0.50	0.60	0.68	0.78	0.92	1.1	1.4	1.7	2.1	2.6	3.4	5.3	8.4	13	21	33	53
0.95	0.50	0.52	0.55	0.57	0.59	0.64	0.71	0.81	0.88	1.0	1.1	1.3	1.5	1.9	2.3	2.8	3.5	5.3	8.2	13	20	32	50
0.90	0.57	0.59	0.62	0.64	0.66	0.71	0.78	0.88	0.95	1.1	1.2	1.3	1.6	1.9	2.3	2.8	3.4	5.2	8.0	12	19	30	48
0.80	0.66	0.68	0.71	0.73	0.74	0.80	0.85	0.95	1.0	1.1	1.2	1.4	1.6	1.9	2.3	2.6	3.2	4.8	7.3	11	17	27	43
0.70	0.71	0.73	0.76	0.78	0.80	0.83	0.88	0.97	1.0	1.1	1.2	1.3	1.5	1.8	2.1	2.5	3.0	4.4	6.6	9.9	15	24	38
Section 2: Copper conductors in nonmagnetic conduit																							
1.00	0.23	0.26	0.28	0.29	0.33	0.38	0.45	0.55	0.62	0.73	0.88	1.0	1.3	1.6	2.1	2.6	3.3	5.3	8.4	13	21	33	53
0.95	0.40	0.43	0.45	0.47	0.50	0.54	0.62	0.71	0.80	0.92	1.0	1.1	1.5	1.8	2.2	2.7	3.4	5.3	8.2	13	20	32	50
0.90	0.47	0.48	0.52	0.54	0.55	0.59	0.68	0.76	0.85	0.95	1.1	1.1	1.5	1.8	2.2	2.7	3.3	5.1	7.9	12	19	30	48
0.80	0.54	0.55	0.57	0.59	0.62	0.66	0.73	0.81	0.88	0.97	1.1	1.1	1.4	1.7	2.1	2.5	3.1	4.7	7.2	11	17	27	43
0.70	0.57	0.59	0.62	0.64	0.66	0.69	0.74	0.83	0.88	0.97	1.1	1.1	1.4	1.6	2.0	2.4	2.8	4.3	6.4	9.7	15	24	38
Section 3: Aluminum conductors in magnetic conduit																							
1.00	0.42	0.45	0.49	0.52	0.55	0.63	0.74	0.91	1.0	1.2	1.4	1.7	2.1	2.6	3.3	4.2	5.2	8.4	13	21	33	52	–
0.95	0.62	0.65	0.70	0.73	0.76	0.83	0.94	1.1	1.2	1.4	1.6	1.8	2.3	2.7	3.4	4.2	5.3	8.2	13	20	32	50	–
0.90	0.69	0.72	0.76	0.79	0.82	0.88	0.99	1.2	1.3	1.4	1.6	1.9	2.3	2.7	3.4	4.1	5.1	7.9	12	19	30	48	–
0.80	0.76	0.80	0.83	0.85	0.88	0.95	1.0	1.2	1.3	1.4	1.6	1.8	2.2	2.6	3.2	3.9	4.7	7.3	11	17	27	43	–
0.70	0.80	0.83	0.87	0.89	0.92	0.98	1.1	1.2	1.3	1.4	1.6	1.7	2.1	2.4	2.9	3.6	4.3	6.5	10	15	24	37	–
Section 4: Aluminum conductors in nonmagnetic conduit																							
1.00	0.36	0.39	0.44	0.47	0.51	0.59	0.70	0.88	1.0	1.2	1.4	1.7	2.1	2.6	3.3	4.2	5.2	8.4	13	21	33	52	–
0.95	0.52	0.56	0.60	0.63	0.67	0.74	0.85	1.0	1.1	1.3	1.5	1.8	2.2	2.7	3.4	4.2	5.2	8.2	13	20	32	50	–
0.90	0.57	0.61	0.65	0.68	0.71	0.79	0.89	1.1	1.2	1.3	1.5	1.8	2.2	2.6	3.3	4.1	5.0	7.9	12	19	30	48	–
0.80	0.63	0.66	0.71	0.73	0.76	0.83	0.92	1.1	1.2	1.3	1.5	1.7	2.1	2.5	3.1	3.8	4.6	7.2	11	17	27	42	–
0.70	0.66	0.69	0.73	0.75	0.78	0.83	0.92	1.1	1.1	1.3	1.4	1.6	1.7	2.3	2.8	3.4	4.2	6.4	9.9	15	24	37	–

*Solid conductor. Other conductors are stranded.

To convert voltage drop to	Multiply by
Single-phase, three-wire, line-to-line	1.15
Single-phase, three-wire, line-to-neutral	0.577
Three-phase, line-to-neutral	0.577

Not for Resale

3.11.3 Busway voltage drop

See Chapter 13 for busway voltage drop tables and related information.

3.11.4 Transformer voltage drop

Voltage-drop curves in figures 3-12 and 3-13 may be used to determine the approximate voltage drop in single-phase and three-phase, 60 Hz, liquid-filled, self-cooled, and dry-type transformers. The voltage drop through a single-phase transformer is found by entering the chart at a kilovoltampere rating three times that of the single-phase transformer. Figure 3-12 covers transformers in the following ranges:

a) *Single-Phase*
250–500 kVA, 8.6–15 kV insulation classes
833–1250 kVA, 5–25 kV insulation classes

b) *Three-Phase*
225–750 kVA, 8.6–15 kV insulation classes
1000–10 000 kVA, 5–25 kV insulation classes

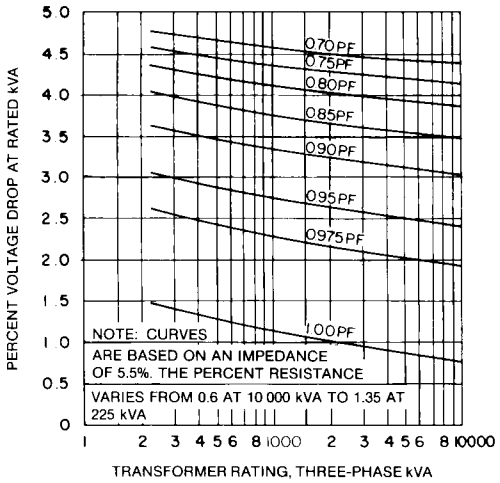

Figure 3-12—Approximate voltage drop curves for three-phase transformers, 225–10 000 kVA, 5–25 kV

An example of the use of the chart is given in the following:

Example. Find the voltage drop in a 2000 kVA three-phase 60 Hz transformer rated 4160-480 V. The load is 1500 kVA at 0.85 power factor.

Solution. Enter the chart on the horizontal scale at 2000 kVA, extend a line vertically to its intersection with the 0.85 power factor curve. Extend a line horizontally from this point to the

Copyright The Institute of Electrical and Electronics Engineers, Inc.
Provided by IHS under license with IEEE
No reproduction or networking permitted without license from IHS
Not for Resale

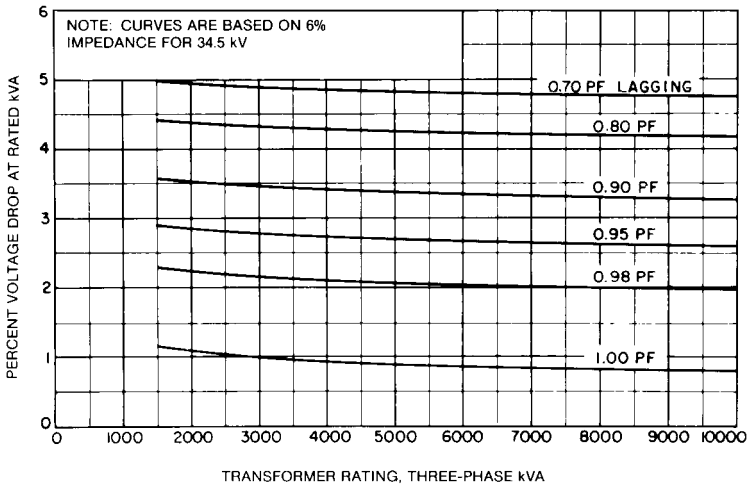

Figure 3-13—Approximate voltage drop curves for three-phase transformers, 1500–10 000 kVA, 34.5 kV

left to its intersection with the vertical scale. This point on the vertical scale gives the percent voltage drop for rated load. Multiply this value by the ratio of actual load to rated load:

$$\text{percent drop at rated load} = 3.67$$

$$\text{percent drop at 1500 kVA} = 3.67 \cdot \frac{1500}{2000}$$

$$= 2.75$$

$$\text{actual voltage drop} = 2.75\% \cdot 480$$

$$= 13.2\ \text{V}$$

Figure 3-13 applies to the 34.5 kV insulation class power transformer in ratings from 1500–10 000 kVA. These curves can be used to determine the voltage drop for transformers in the 46 and 69 kV insulation classes by using appropriate multipliers at all power factors except unity.

To correct for 46 kV, multiply the percent voltage drop obtained from the chart by 1.065, and for 69 kV, multiply by 1.15.

3.11.5 Motor-starting voltage drop

It is characteristic of ac motors that the current they draw on starting is much higher than their normal running current. Synchronous and squirrel-cage induction motors started on full voltage may draw a current as high as seven or eight times their full-load running current. This sudden increase in the current drawn from the power system may result in excessive drop in

Copyright The Institute of Electrical and Electronics Engineers, Inc.
Provided by IHS under license with IEEE
No reproduction or networking permitted without license from IHS Not for Resale

voltage unless it is considered in the design of the system. The motor-starting load in kilovoltamperes, imposed on the power supply system, and the available motor torque are greatly affected by the method of starting used.

Table 3-13 gives a comparison of several common reduced voltage starting methods. Starting currents for autotransformers include excitation current for the autotransformer. All voltages, currents, and starting torques assume 100% of motor nameplate voltage applied to the starter with no voltage drop in the supply system. Actual motor starting torques vary with the ratio of actual to nameplate voltage squared. Users should be aware that reduced voltage starting methods are often used because full voltage starts cause unacceptable voltage drop. Reduced voltage starting methods cause some voltage drop and starting torques will be less than table 3-13 if the voltage to the starter drops below motor nameplate rating.

Table 3-13—Comparison of motor starting methods

Type of starter (settings given are the more common for each type)	Motor terminal voltage (percent line voltage)	Starting torque (percent full-voltage starting torque)	Line-current (percent full-voltage starting current)
Full-voltage starter	100	100	100
Autotransformer			
80% tap	80	64	67
65% tap	65	42	45
50% tap	50	25	28
Resistor starter, single step (adjusted for motor voltage to be 80% of line voltage)	80	64	80
Reactor			
50% tap	50	25	50
45% tap	45	20	45
37.5% tap	37.5	14	37.5
Part-winding starter (low-speed motors only)			
75% winding	100	75	75
50% winding	100	50	50

NOTE—See 3.11.5 for more information.

In addition to methods listed in table 3-13, users should consider solid-state soft-start motor controllers and/or adjustable speed drives.

Copyright The Institute of Electrical and Electronics Engineers, Inc.
Provided by IHS under license with IEEE
No reproduction or networking permitted without license from IHS
Not for Resale

3.11.6 Effect of motor starting on generators

Figure 3-14 shows the behavior of the voltage of a generator when an induction motor is started. Starting a synchronous motor has a similar effect up to the time of pull-in torque. The case used for this illustration utilizes a full-voltage starting device, and the full-voltage motor starting load in kilovoltamperes is about 100% of the generator rating. It is assumed for curves A and B that the generator is provided with an automatic voltage regulator.

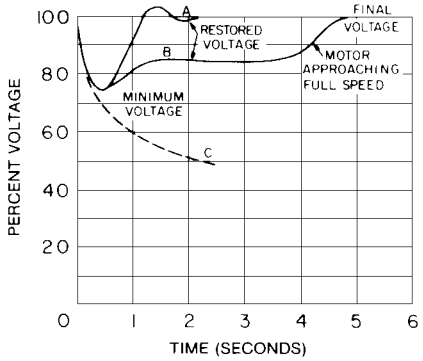

Motor-starting kVA = 100% of generator rating
A — No initial load on generator
B — 50% initial load on generator
C — No regulator

Figure 3-14—Typical generator voltage behavior due to full-voltage starting of a motor

The minimum voltage of the generator as shown in figure 3-14 is an important quantity because it is a determining factor affecting undervoltage devices and contactors connected to the system and the stalling of motors running on the system. The curves of figure 3-15 can be used for estimating the minimum voltage occurring at the terminals of a generator supplying power to a motor being started.

3.11.7 Effect of motor starting on distribution system

Frequently in the case of purchased power, there are transformers and cables between the starting motor and the generator. Most of the drop in this case is within the distribution equipment. When all the voltage drop is in this equipment, the voltage falls immediately (because it is not influenced by a regulator as in the generator case) and does not recover until the motor approaches full speed. Since the transformer is usually the largest single impedance in the distribution system, it takes almost the total drop. Figure 3-16 has been plotted in terms of motor starting load in kilovoltamperes that would be drawn if rated transformer secondary voltage were maintained.

Copyright The Institute of Electrical and Electronics Engineers, Inc.
Provided by IHS under license with IEEE
No reproduction or networking permitted without license from IHS Not for Resale

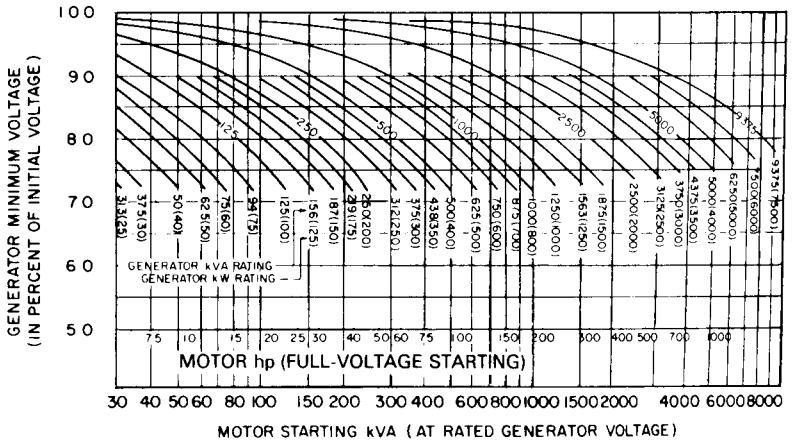

NOTES: (1) The scale of motor horsepower is based on the starting current being equal to approximately 5.5 times normal.

(2) If there is no initial load, the voltage regulator will restore voltage to 100% after dip to values given by curves.

(3) Initial load, if any, is assumed to be of constant-current type.

(4) Generator characteristics are assumed as follows: (a) Generators rated 1000 kVA or less: Performance factor k = 10; transient reactance X_d' = 25%; synchronous reactance X_d = 120%. (b) Generators rated above 1000 kVA: Characteristics for 3600 r/min turbine generators.

Figure 3-15—Minimum generator voltage due to full-voltage starting of a motor

Copyright The Institute of Electrical and Electronics Engineers, Inc.
Provided by IHS under license with IEEE
No reproduction or networking permitted without license from IHS
Not for Resale

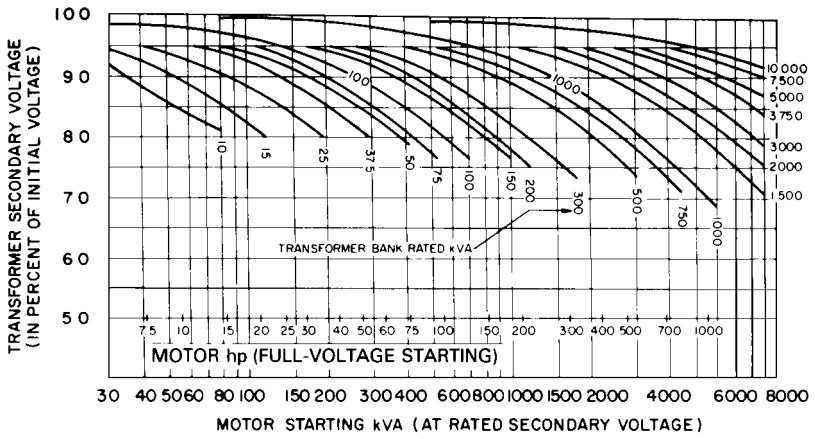

NOTES: (1) The scale of motor horsepower is based on the starting current being equal to approximately 5.5 times normal.

(2) Short-circuit capacity of primary supply is assumed to be as follows:

Transformer bank load (kVA)	Primary short-circuit capacity (kVA)
0-300	25 000
500-1000	50 000
1500-3000	100 000
3760-10 000	250 000

(3) Transformer impedances are assumed to be as follows:

Transformer bank load (kVA)	Primary bank impedance (percent)
10-50	3.0
75-150	4.0
200-500	5.0
750-2000	5.5
3000-10 000	6.0

(4) Representative values of primary system voltage drop, expressed as a fraction of total drop, for the assumed conditions, are as follows:

Transformer bank load (kVA)	$\frac{\text{System drop}}{\text{Total drop}}$
100	0.09
1000	0.25
10 000	0.44

Figure 3-16—Approximate voltage drop in a transformer due to full-voltage starting of a motor

Copyright The Institute of Electrical and Electronics Engineers, Inc.
Provided by IHS under license with IEEE
No reproduction or networking permitted without license from IHS
Not for Resale

3.12 References

This standard shall be used in conjunction with the following publications:

ANSI C57.12.20-1988, American National Standard Requirements for Overhead-Type Distribution Transformers 67 000 Volts and Below, 500 kVA and Smaller.[3]

ANSI C84.1-1989, American National Standard Voltage Ratings for Electric Power Systems and Equipment (60 Hz).

ANSI C92.2-1987, American National Standard Preferred Voltage Ratings for Alternating-Current Electrical Systems and Equipment Operating at Voltages above 230 Kilovolts Nominal for Power Systems.

ANSI/NFPA 70-1993, National Electric Code.[4]

CAN3-C235-83, Preferred Voltage Levels for AC Systems, 0 to 50 000 V (Canadian Standards Association).[5]

IEEE Std 100-1992, The New IEEE Standard Dictionary of Electrical and Electronics Terms (ANSI).

IEEE Std 142-1991, IEEE Recommended Practice for Grounding of Industrial and Commercial Power Systems (IEEE Green Book) (ANSI).

IEEE Std 242-1986 (Reaff 1991), IEEE Recommended Practice for Protection and Coordination of Industrial and Commercial Power Systems (IEEE Buff Book) (ANSI).

IEEE Std 446-1987, IEEE Recommended Practice for Emergency and Standby Power Systems for Industrial and Commercial Applications (IEEE Orange Book) (ANSI).

IEEE Std 519-1992, IEEE Recommended Practices and Requirements for Harmonic Control in Electric Power Systems.

IEEE Std 1100-1992, IEEE Recommended Practice for Powering and Grounding Sensitive Electronic Equipment (IEEE Emerald Book).

NEMA MG 1-1993, Motors and Generators.[6]

---

[3]ANSI publications are available from the Sales Department, American National Standards Institute, 11 West 42nd Street, 13th Floor, New York, NY 10036, USA.

[4]NFPA publications are available from Publication Sales, National Fire Protection Association, 1 Batterymarch Park, P.O. Box 9101, Quincy, MA 02269-9101, USA.

[5]CSA publications are available from the Canadian Standards Association (Standards Sales), 178 Rexdale Blvd., Rexdale, Ontario, Canada M9W 1R3.

[6]NEMA publications can be obtained from the Sales Department, American National Standards Institute, or from the National Electrical Manufacturers Association, 2101 L Street, NW, Washington, DC 20037.

Copyright The Institute of Electrical and Electronics Engineers, Inc.
Provided by IHS under license with IEEE
No reproduction or networking permitted without license from IHS
Not for Resale

3.13 Bibliography

[B1] Arnold, R. E., "NEMA Suggested Standards for Future Design of AC Integral Horsepower Motors," *IEEE Transactions on Industry and General Applications*, vol. IGA-6, pp. 110–114, Mar./Apr. 1970.

[B2] Brereton, D. S., and Michael, D. T., "Developing a New Voltage Standard for Industrial and Commercial Power Systems," *Proceedings of the American Power Conference*, vol. 30, pp. 733–751, 1968.

[B3] Brereton, D. S., and Michael, D. T., "Significance of Proposed Changes in AC System Voltage Nomenclature for Industrial and Commercial Power Systems: I—Low-Voltage Systems," *IEEE Transactions on Industry and General Applications*, vol. IGA-3, pp. 504–513, Nov./Dec. 1967.

[B4] Brereton, D. S., and Michael, D. T., "Significance of Proposed Changes in AC System Voltage Nomenclature for Industrial and Commercial Power Systems: II—Medium-Voltage Systems," *IEEE Transactions on Industry and General Applications*, vol. IGA-3, pp. 514–520, Nov./Dec. 1967.

[B5] Conrad, L., Grigg, C., and Little, K., "Predicting and Preventing Problems Associated with Remote Fault Clearing Voltage Dips," *IEEE Transactions on Industry Applications*, vol. 27, no. 1, pp. 167–172, Jan./Feb. 1991.

[B6] *Electric Utility Engineering Reference Book, vol. 3: Distribution Systems*. Trafford, PA: Westinghouse Electric Corporation, 1965.

[B7] Goldstein, M., and Speranza, P., "The Quality of U.S. Commercial AC Power," IEEE paper CH1818-4/82/000-00028, 1982.

[B8] Gulachenski, E., "New England Electric's Power Quality Research Study," *Proceedings of the Second International Conference on Power Quality*, Palo Alto, California: Electric Power Research Institute, pp. F-11:1-10, 1992.

[B9] IEEE Distribution Subcommittee Working Group of Voltage Flicker, "Flicker Limitations of Electric Utilities," 1985.

[B10] Linders, J. R., "Effects of Power Supply Variations on AC Motor Characteristics," Conference Record, 6th Annual Meeting of the IEEE Industry and General Applications Group, IEEE 71 C1-IGA, pp. 1055–1068, 1971.

[B11] Michael, D. T., "Proposed Design Standard for the Voltage Drop in Building Wiring for "Low-Voltage Systems," *IEEE Transactions on Industry and General Applications*, vol. IGA-4, pp. 30–32, Jan./Feb. 1968.

[B12] *Standard Handbook for Electrical Engineers*, 10 Ed., Table 18-5. New York: McGraw-Hill.

Copyright The Institute of Electrical and Electronics Engineers, Inc.
Provided by IHS under license with IEEE
No reproduction or networking permitted without license from IHS Not for Resale

Chapter 4
Short-circuit current calculations

4.1 Introduction

Even the best designed electric systems occasionally experience short circuits resulting in abnormally high currents. Overcurrent protective devices, such as circuit breakers and fuses, should isolate faults at a given location safely with minimal circuit and equipment damage and minimal disruption of the plant's operation. Other parts of the system, such as cables, busways, and disconnecting switches, shall be able to withstand the mechanical and thermal stresses resulting from maximum flow of short-circuit current through them. The magnitudes of short-circuit currents are usually estimated by calculation, and equipment is selected using the calculation results.

The current flow during a short circuit at any point in a system is limited by the impedance of circuits and equipment from the source or sources to the point of fault. It is not directly related to the size of the load on the system. However, additions to the system that increase its capacity to handle a growing load, such as more or larger incoming transformers from a utility, while not affecting the normal load at some existing locations in the system, may drastically increase the short-circuit currents at those locations. Whether an existing system is expanded or a new system is installed, available short-circuit currents should be determined for proper application of overcurrent protective devices.

Calculated maximum short-circuit currents are nearly always required. In some cases, the minimum sustained values are also needed to check the sensitivity requirements of the current-responsive protective devices.

This chapter has three purposes:

a) To present some fundamental considerations of short-circuit current calculations;
b) To illustrate some commonly used methods of making these calculations with typical examples;
c) To furnish typical data that can be used in making short-circuit current calculations.

The size and complexity of many modern industrial systems may make longhand short-circuit current calculations impractically time-consuming. Computers are generally used for major short-circuit studies. Whether or not computers are available, a knowledge of the nature of short-circuit currents and calculating procedures is essential to conduct such studies.

4.2 Sources of fault current

Fundamental frequency currents that flow during a short circuit come from rotating electric machinery. (Charged power capacitors can also produce extremely high transient short-circuit

Copyright The Institute of Electrical and Electronics Engineers, Inc.
Provided by IHS under license with IEEE
No reproduction or networking permitted without license from IHS
Not for Resale

discharge currents, but they are of natural frequency much higher than power frequency and usually of such short duration that the calculated power frequency short-circuit duty current is not significantly increased by adding the capacitor discharge. Discharge currents are calculated as described for RLC circuits in many electrical engineering texts and an appropriate RLC circuit can be based on power system data.) Rotating machinery in industrial plant short-circuit calculations may be analyzed in five categories:

a) Synchronous generators
b) Synchronous motors and condensers
c) Induction machines
d) Electric utility systems
e) Adjustable speed ac induction or dc motors with solid-state ac power supply equipments

The fault current from each rotating machinery source is limited by the impedance of the machine and the impedance between the machine and the short circuit. Fault currents generally are not dependent upon the pre-fault loading of the machine. The impedance of a rotating machine is not a simple value but is complex and variable with time.

4.2.1 Synchronous generators

If a short circuit is applied to the terminals of a synchronous generator, the short-circuit current starts out at a high value and decays to a steady-state value some time after the inception of the short circuit. Since a synchronous generator continues to be driven by its prime mover and to have its field externally excited, the steady-state value of short-circuit current will persist unless interrupted by some switching means. An equivalent circuit consisting of a constant driving voltage in series with an impedance that varies with time (figure 4-1) is used to represent this characteristic. The varying impedance consists primarily of reactance.

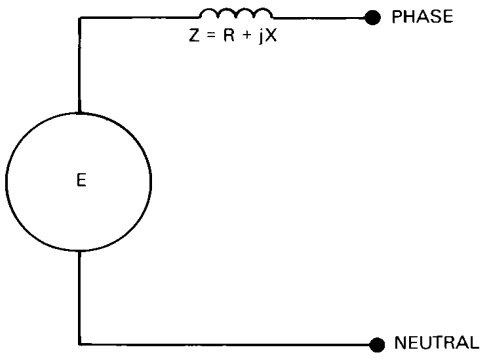

Figure 4-1—Equivalent circuit for generators and motors
E = (driving voltage, X varies with time)

Copyright The Institute of Electrical and Electronics Engineers, Inc.
Provided by IHS under license with IEEE
No reproduction or networking permitted without license from IHS
Not for Resale

For purposes of short-circuit current calculations, industry standards have established three specific names for values of this variable reactance, called subtransient reactance, transient reactance, and synchronous reactance.

X_d'' = subtransient reactance; determines current during first cycle after fault occurs. In about 0.1 s reactance increases to

X_d' = transient reactance; assumed to determine current after several cycles at 60 Hz. In about 0.5 to 2 s reactance increases to

X_d = synchronous reactance; this is the value that determines the current flow after a steady-state condition is reached.

Because most short-circuit interrupting devices, such as circuit breakers and fuses, operate well before steady-state conditions are reached, generator synchronous reactance is seldom used in calculating fault currents for application of these devices.

Synchronous generator data available from some manufacturers includes two values for direct axis subtransient reactance—for example, subtransient reactances X_{dv}'' (at rated voltage, saturated, smaller) and X_{di}'' (at rated current, unsaturated, larger). Because a short-circuited generator may be saturated, and for conservatism, the X_{dv}'' value is used for short-circuit current calculations.

4.2.2 Synchronous motors and condensers

Synchronous motors supply current to a fault much as synchronous generators do. When a fault causes system voltage to drop, the synchronous motor receives less power from the system for rotating its load. At the same time, the internal voltage causes current to flow to the system fault. The inertia of the motor and its load acts as a prime mover and, with field excitation maintained, the motor acts as a generator to supply fault current. This fault current diminishes as the magnetic field in the machine decays.

The generator equivalent circuit is used for synchronous motors. Again, a constant driving voltage and the same three reactances, X_d'', X_d', and X_d, are used to establish values of current at three points in time.

Synchronous condensers are treated in the same manner as synchronous motors.

4.2.3 Induction machines

A squirrel-cage induction motor will contribute current to a power system short circuit. This is generated by inertia driving the motor in the presence of a field flux produced by induction from the stator rather than from a dc field winding. Since this flux decays on loss of source voltage caused by a fault at the motor terminals, the current contribution of an induction motor to a terminal fault reduces and disappears completely after a few cycles. Because field excitation is not maintained, there is no steady-state value of fault current as for synchronous machines.

Copyright The Institute of Electrical and Electronics Engineers, Inc.
Provided by IHS under license with IEEE
No reproduction or networking permitted without license from IHS Not for Resale

Again, the same equivalent circuit is used, but the values of transient and synchronous reactance approach infinity. As a consequence, induction motors are assigned only a subtransient value of reactance X_d''. This value varies upward from the locked rotor reactance to account for the decay of the motor current contribution to the short circuit.

For short-circuit current calculations, an induction generator can be treated the same as an induction motor. Wound-rotor induction motors normally operating with their rotor rings short-circuited will contribute short-circuit current in the same manner as a squirrel-cage induction motor. Occasionally, large wound-rotor motors operated with some external resistance maintained in their rotor circuits may have sufficiently low short-circuit time constants that their short-circuit current contribution is not significant and may be neglected. A specific investigation should be made to determine whether to neglect the contribution from a wound-rotor motor.

4.2.4 Electric utility systems

The remote generators of an electric utility system are a source of short-circuit current often delivered through a supply transformer. The generator-equivalent circuit can be used to represent the utility system. The utility generators are usually remote from the industrial plant. The current contributed to a short circuit in the remote plant appears to be merely a small increase in load current to the very large central station generators, and this current contribution tends to remain constant. Therefore, the electric utility system is usually represented at the plant by a single valued equivalent impedance referred to the point of connection.

4.2.5 Adjustable speed ac induction or dc motors with solid-state ac power supply equipments

Some adjustable speed ac induction or dc motors, speed controlled by adjusting the frequency or dc voltage of solid-state ac power supply equipments, can, under certain conditions, contribute current from the motors to a short circuit on the incoming ac electric power system. The design of the power supply equipment determines whether a current can or cannot be “backfed” from the motors. When it can, the power supply operating mode at the time of the power system short circuit usually determines the magnitude and duration of the backfed current. For some motors, the duration is limited by power supply equipment protective functions to less than one cycle of ac power frequency. The adjustable frequency or dc voltage power supply manufacturer should be consulted for information on whether adjustable speed ac induction or dc motors can contribute backfeed current to ac power system short circuits, and if so, under what operating conditions and how much.

4.3 Fundamentals of short-circuit current calculations

Ohm’s law, $I = E/Z$, is the basic relationship used in determining I, the short-circuit current, where E is the driving voltage of the source, and Z is the impedance from the source to the short circuit including the impedance of the source.

Copyright The Institute of Electrical and Electronics Engineers, Inc.
Provided by IHS under license with IEEE
No reproduction or networking permitted without license from IHS Not for Resale

Most industrial systems have multiple sources supplying current to a short circuit since each motor can contribute. One step in short-circuit current calculation is the simplification of the multiple-source system to the condition where the basic relationship applies.

4.3.1 Purpose of calculations

System and equipment complexity and the lack of accurate parameters make precise calculations of short-circuit currents exceedingly difficult, but extreme precision is unnecessary. The calculations described provide reasonable accuracy for the maximum and minimum limits of short-circuit currents. These satisfy the usual reasons for making calculations.

The maximum calculated short-circuit current values are used for selecting interrupting devices of adequate short-circuit rating, to check the ability of components of the system to withstand mechanical and thermal stresses, and to determine the time-current coordination of protective relays. The minimum values are used to establish the required sensitivity of protective relays. Minimum short-circuit values are sometimes estimated as fractions of the maximum values. If so, it is only necessary to calculate the maximum values of short-circuit current.

For calculating the maximum short-circuit current, the industrial electric power system should have the largest expected number of connected rotating machines (usually with the system at full future load).

4.3.2 Type of short circuit

In an industrial system, the three-phase short circuit is frequently the only one considered, since this type of short circuit generally results in maximum short-circuit current.

Line-to-line short-circuit currents are approximately 87% of three-phase short-circuit currents. Line-to-ground short-circuit currents can range in utility systems from a few percent to possibly 125% of the three-phase value. In industrial systems, line-to-ground short-circuit currents higher than three phase are rare except when bolted short circuits are near the wye windings with a solidly grounded neutral of either generators or two winding, delta-wye, core-type transformers.

Assuming a three-phase short-circuit condition also simplifies calculations. The system, including the short circuit, remains symmetrical about the neutral point, whether or not the neutral point is grounded and regardless of wye or delta transformer connections. The balanced three-phase short-circuit current can be calculated using a single-phase equivalent circuit that has only line-to-neutral voltage and impedance.

In calculating the maximum short-circuit current, it is assumed that the short-circuit connection has zero impedance (is “bolted”) with no current-limiting effect due to the short circuit itself. It should be recognized, however, that actual short circuits often involve arcing, and variable arc impedance can reduce low-voltage short-circuit current magnitudes appreciably.

--`,,`,,`,`,,`,,`---
Copyright The Institute of Electrical and Electronics Engineers, Inc.
Provided by IHS under license with IEEE
No reproduction or networking permitted without license from IHS
Not for Resale

In low-voltage systems, the minimum values of short-circuit current are sometimes calculated from known effects of arcing. Analytical studies indicate that the sustained arcing short-circuit currents, in per unit of bolted fault values, may be typically as low as

a) 0.89 at 480 V and 0.12 at 208 V for three-phase arcing
b) 0.74 at 480 V and 0.02 at 208 V for line-to-line single-phase arcing
c) 0.38 at 277 V and 0.01 at 120 V for line-to-neutral single-phase arcing

4.3.3 Basic equivalent circuit

The basic equation finds the current of a simple circuit having one voltage source and one impedance. In the basic equation, the voltage E represents a single overall system driving voltage, which replaces the array of individual unequal generated voltages acting within separate rotating machines. This voltage is equal to the prefault voltage at the point of short-circuit connection. The impedance Z is a network reduction of the impedances representing all significant elements of the power system connected to the short-circuit point including source internal impedances.

This equivalent circuit of the power system is a valid circuit transformation in accordance with Thevenin's theorem. It permits a determination of short-circuit current corresponding to the values of system impedances used.

Ordinarily, the prefault voltage is taken as the system nominal voltage at the point of short circuit because this is close to the maximum operating voltage under fully loaded system conditions, and therefore the short-circuit currents will approach maximum. Higher than nominal voltage might be used in an unusual case when full load system voltage is observed to be above nominal.

The single-phase representation of a three-phase balanced system uses per-phase impedances and the line-to-neutral system driving voltage. Line-to-neutral voltage is line-to-line voltage divided by $\sqrt{3}$.

Calculations may use impedances in ohms and voltages in volts, or both in per unit. Per unit calculations simplify short-circuit studies for industrial systems that involve voltages of several levels. When using the per unit system, the driving voltage is equal to 1.0 per unit if voltage bases are equal to system nominal voltages.

The major elements of impedance must always be included in a short-circuit current calculation. These are impedances of transformers, busways, cables, conductors, and rotating machines. There are other circuit impedances, such as those associated with circuit breakers, wound or bar-type current transformers, bus structures, and bus connections, that are usually small enough to be neglected in medium- or high-voltage-system short-circuit calculations, because the accuracy of the calculation is not generally affected. Omitting them provides slightly more conservative (higher) short-circuit currents. However, in low-voltage systems, and particularly at 208 V, there are cases where impedance of these elements is appreciable and inclusion can significantly reduce the calculated short-circuit current.

Copyright The Institute of Electrical and Electronics Engineers, Inc.
Provided by IHS under license with IEEE
No reproduction or networking permitted without license from IHS Not for Resale

Also, the usual practice is to disregard the presence of static loads (such as lighting and electric heating) in the network, despite the fact that their associated impedance is actually connected in shunt with other network branches. This approach is considered valid since usually the relatively high power factor static load impedances are large and approximately 90° out-of-phase compared to the impedances of the other highly reactive parallel branches of the network.

In ac circuits, the impedance *Z* is the vector sum of resistance *R* and reactance *X*. It is always acceptable to calculate short-circuit currents using vector impedances in the equivalent circuit. For most short-circuit current magnitude calculations at medium or high voltage, and for a few at low voltage, when the reactances are much larger than the resistances, it is sufficiently accurate, conservative, and simpler to ignore resistances and use reactances only.

For many low-voltage calculations, however, resistances should not be ignored because the calculated currents would be overconservative.

Resistances are definitely needed for calculations of *X*/*R* ratios when applying high- and medium-voltage circuit breakers, but they are analyzed in a network separate from the reactance network.

4.4 Restraints of simplified calculations

The short-circuit calculations described in this chapter are a simple *E*/*Z* evaluation of extensive electric power system networks. Before describing the step-by-step procedures in making these calculations, it is appropriate to review some of the restraints imposed by the simplification.

4.4.1 Impedance elements

When an ac electric power circuit contains resistance *R*, inductance *L*, and capacitance *C*, such as the series connection shown in figure 4-2, the expression relating current to voltage includes the terms shown in figure 4-2. A textbook determination of the current magnitude requires the solution of a differential equation.

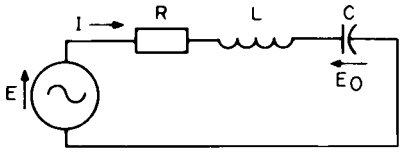

$$E = L\frac{dI}{dt} + RI + \frac{\int I\,dt}{C} + E_0$$

$$= L\frac{d^2Q}{dt^2} + R\frac{dQ}{dt} + \frac{Q}{C} + E_0$$

Figure 4-2—Series RLC circuit

Copyright The Institute of Electrical and Electronics Engineers, Inc.
Provided by IHS under license with IEEE
No reproduction or networking permitted without license from IHS
Not for Resale

If two important restraints are applied to this series circuit, the following simple equation using vector impedances ($XL = \omega L$ and $XC = 1/\omega C$) is valid:

$$E = I\left[R + j\left(\omega L - \frac{1}{\omega C}\right)\right]$$

These restraints are that, first, the electric driving force be a sine wave and, second, the impedance coefficients *R, L,* and *C* be constants. Unfortunately, in short-circuit calculations these restraints may be invalidated. A major reason for this is switching transients.

4.4.2 Switching transients

The vector impedance analysis recognizes only the steady-state sine wave electrical quantities and does not include the effects of abrupt switching. Fortunately, the effects of switching transients can be analyzed separately and added. (An independent solution can be obtained from a solution of the formal differential equations.)

In the case of only resistance *R* (figure 4-3), the closure of switch *SW* causes the current to immediately assume the value that would exist in the steady state. No transient adder is needed.

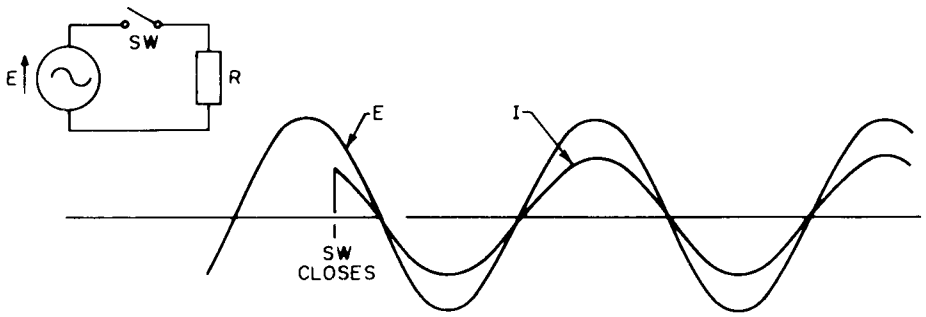

Figure 4-3—Switching Transient R

In the case of all inductance *L* (figure 4-4), an understanding of the switching transient can best be acquired using the following expression:

$$E = L\frac{dI}{dt}\ , \frac{dI}{dt} = \frac{E}{L}$$

This expression tells us that the application of a driving voltage to an inductance will create a time rate of change in the current magnitude. The slope of the current-time curve in the inductance will be equal to the quantity *E/L.*

Copyright The Institute of Electrical and Electronics Engineers, Inc.
Provided by IHS under license with IEEE
No reproduction or networking permitted without license from IHS Not for Resale

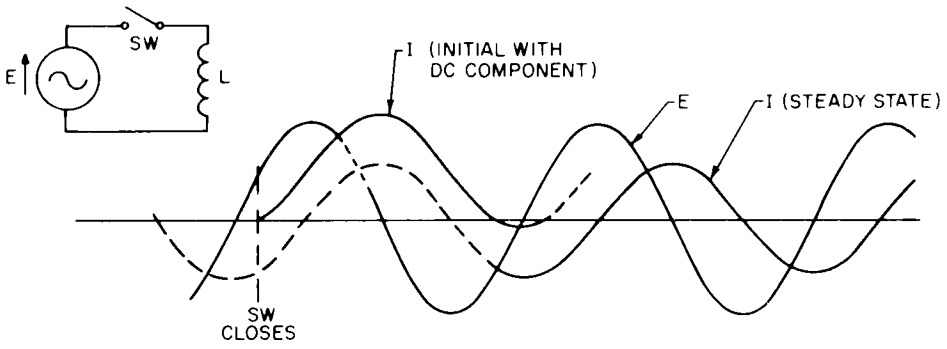

Figure 4-4—Switching transient L

The steady-state current curve is displayed at the right hand side of the graph of figure 4-4. It lags the voltage wave by 90° and is rising at the maximum rate in the positive direction when the voltage is at the maximum positive value. It holds at a fixed value when the driving voltage is zero. This curve is projected back to the time of circuit switching (dashed curve). Note that at the instant the switch is closed, the steady-state current would have been at a negative value of about 90% of crest value. Since the switch was previously open, the true circuit current must be zero. After closing the switch, the current wave will display the same slope as the steady-state wave. This is the solid line current curve beginning at the instant of switch closing. Note that the difference between this curve and the steady state is a positive dc component of the same magnitude that the steady-state wave would have had at the instant of switch closing, in the negative direction. Thus the switching transient takes the form of a dc component whose value may be anything between zero and the steady-state crest value, depending on the angle of switch closing.

If the circuit contained no resistance, the current would continue forever in the displaced form. The presence of resistance causes the dc component to be dissipated exponentially. The complete expression for the current would take the following form:

$$I = \frac{E}{j\omega L} \sin(\omega t) + I_{dc} e^{(-Rt)/L}$$

The presence of dc components may introduce unique problems in selective coordination between some types of overcurrent devices. It is particularly important to bear in mind that these transitory currents are not disclosed by the vector impedance circuit solution, but must be introduced artificially by the analyst or by the guide rules followed.

4.4.3 Decrement factor

The value at any time of a decaying quantity, expressed in per unit of its initial magnitude, is the decrement factor for that time. Refer to figure 4-5 for decrement factors of an exponential decay.

Copyright The Institute of Electrical and Electronics Engineers, Inc.
Provided by IHS under license with IEEE
No reproduction or networking permitted without license from IHS
Not for Resale

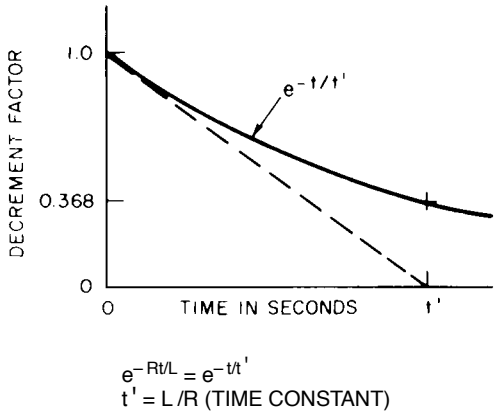

Figure 4-5—Decrement factor

The significance of the decrement factor can be better understood if the exponential is expressed in terms of the time constant. If, as indicated in figure 4-5, the exponent is expressed as $-t/t'$ with the time variable t in the numerator and the rest combined as a single constant t' (called the time constant) in the denominator, the transitory quantity begins its decay at a rate that would cause it to vanish in one time constant. The exponential character of the decay results in a remnant of 36.8% remaining after an elapsed time equal to one time constant. Any value of the transitory term selected at, say, time t will be reduced to 0.368 of that value after a subsequent elapsed time equal to one time constant. A transitory quantity of magnitude 1.0 at time zero would be reduced to a value of 0.368 after an elapsed time equal to one time constant, to a value of 0.135 after an elapsed time equal to two time constants, and to a value of 0.05 after an elapsed time equal to three time constants.

4.4.4 Multiple switching transients

The analyst usually assumes that the switching transient will occur only once during one excursion of short-circuit current flow. An examination of representative oscillograms of short-circuit currents will often display repeated instances of momentary current interruptions. At times, an entire half cycle of current will be missing. In other cases, especially in low-voltage circuits, there may be a whole series of chops and jumps in the current pattern. A switching interrupter, especially when switching a capacitive circuit, may be observed to restrike two or perhaps three times before final interruption. The restrike generally occurs when the voltage across the switching contacts is high. It is entirely possible that switching transients, both simple dc and ac transitory oscillations, may be reinserted in the circuit current a number of times during a single incident of short-circuit current flow and interruption. The analyst should remain mindful of possible trouble.

4.4.5 Practical impedance network synthesis

One approach to an adequate procedure for computing the phase A current of a three-phase system is indicated in figure 4-6. For each physical conducting circuit, the voltage drop is represented as the sum of the self-impedance drops in the circuit and the complete array of

Copyright The Institute of Electrical and Electronics Engineers, Inc.
Provided by IHS under license with IEEE
No reproduction or networking permitted without license from IHS Not for Resale

mutually coupled voltage drops caused by current flow in other coupled circuits. The procedure is complex even in those instances where the current in both the neutral and ground conductors is zero.

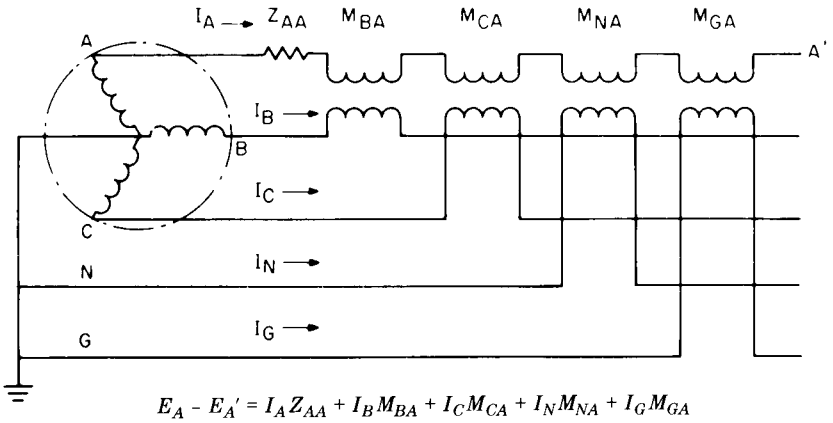

Figure 4-6—Three-phase, four-wire circuit, unbalanced loading

The simplified analytical approach to this problem assumes balanced symmetrical loading of a symmetrical polyphase system. With a symmetrical system operating with a symmetrical loading, the effects of all mutual couplings are similarly balanced. What is happening in phase A in the way of self- and mutually coupled voltages is also taking place in phase B with exactly the same pattern, except displaced 120°, and it is also taking place in phase C with the same pattern, except displaced another 120°. The key to the simplification is the fact that the ratio of the total voltage drop in one phase circuit to the current in that phase circuit is the same in all three phases of the system. Thus it appears that each phase possesses a firm impedance value common with the other phases. This unique impedance quantity is identified as the single phase line-to-neutral impedance value. Any one line-to-neutral single phase segment of the system may be sliced out for the analysis, since all are operating with the same load pattern.

The impedance diagram of the simplified concept appears in figure 4-7. The need to deal with mutual coupling has vanished. Since each phase circuit presents identically the same information, it is common to show only a single phase segment of the system in a one line diagram as illustrated simply by figure 4-1. The expressions below the sketch in figure 4-7 contain some unfamiliar terms. Their meaning will be discussed in succeeding paragraphs.

One restraint associated with this simple analytical method is that all phases of the system share symmetrical loading. While a three-phase short circuit would satisfy this restraint, some short-circuit problems that must be solved are not balanced. For these unbalanced short-circuit problems, the concept of symmetrical components is used for solution. This concept discloses that any conceivable condition of unbalanced loading can be correctly synthesized by the use of appropriate magnitudes and phasing of several systems of symmetrical loading. In a three-phase system, with a normal phase separation of 120°, there are just three

Copyright The Institute of Electrical and Electronics Engineers, Inc.
Provided by IHS under license with IEEE
No reproduction or networking permitted without license from IHS
Not for Resale

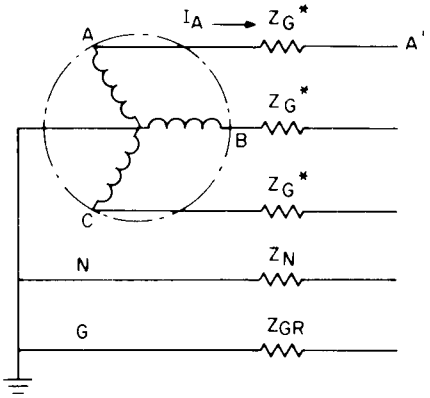

Impedance identity for each symmetrical pattern:

Positive sequence	Z_{G1}
Negative sequence	Z_{G2}
Zero sequence	$Z_{G0} + 3Z_{GR}$*

* Based on zero current in conductor N.

$$E_A - E_A' = I_{A1} Z_{G1} + I_{A2} Z_{G2} + I_{A0} (Z_{G0} + 3Z_{GR})$$

Figure 4-7—Three-phase, four-wire circuit, balanced symmetrical loading

possible symmetrical loading patterns. These can be quickly identified with the aid of figure 4-8. Loadings of the three-phase windings A, B, and C must follow each other in sequence, separated by some multiple of 120°. In figure 4-8(a) they follow each other with a 120° separation, in figure 4-8(b) with a 240° separation, and in figure 4-8(c) with a 360° separation. Note that separation angles of any other multiples of 120° will duplicate one of the three already shown. These loading patterns satisfy the restraints demanded by the analytical method to be used.

Note that figure 4-8(a), identified as the positive sequence, represents the normal balanced operating mode. Thus there are only two sequence networks that differ from the normal. Figure 4-8(b), called the negative sequence, identifies a loading pattern very similar to the positive sequence, except that the electrical quantities come up with the opposite sequence. A current of this pattern flowing in a motor stator winding would create a normal speed rotating field, but with backward rotation. The pattern of figure 4-8(c), called the zero sequence, represents the case in which the equal currents in each phase are in phase. Each phase current reaches its maximum in the same direction at the same instant.

It is understandable that machine interwinding mutual coupling and other mutual coupling effects will be different in the different sequence systems. Hence it is likely that the per phase impedance of the negative and zero sequence systems will differ from that of the positive sequence. Currents of zero sequence, being in phase, do not add up to zero at the end terminal as do both the positive and negative sequence currents. They add arithmetically and return to

Copyright The Institute of Electrical and Electronics Engineers, Inc.
Provided by IHS under license with IEEE
No reproduction or networking permitted without license from IHS Not for Resale

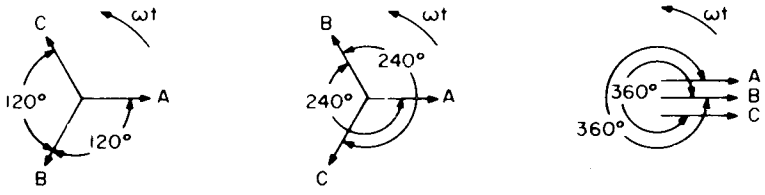

The individual phase quantities A, B, and C follow each other with an angular spacing of

Positive sequence	120°
Negative sequence	240°
Zero sequence	360°

Figure 4-8—Three-phase symmetrical load patterns applicable to a three-phase system

the source via an additional circuit conductor. The zero-sequence voltage drop of this return conductor is accounted for in the zero-sequence impedance value. With this understanding of the three symmetrical loading patterns, the significance of the notes below the sketch in figure 4-7 becomes clear.

The simplifications in analytical procedures accomplished by the per-phase line-to-neutral balanced system concepts carry with them some important restraints:

a) The electric power system components shall be of symmetrical design pattern.
b) The electric loading imposed on the system shall be balanced and symmetrical.

Wherever these restraints are violated, it is necessary to construct substantially hybrid network interconnections that bridge the zones of unbalanced conditions. In the field of short-circuit current calculations, the necessary hybrid interconnections of the sequence networks to accommodate the various unbalanced fault connections can be found in a variety of published references. It is harder to find the necessary hybrid interconnections to accommodate a lack of symmetry in the circuit geometry, as needed for an open delta transformer bank, an open line conductor, etc.

4.4.6 Other analytical tools

A large number of valid network theorems can be used effectively to simplify certain kinds of problems encountered in short-circuit analysis. These are described and illustrated in many standard texts on ac circuit analysis; see Chapter 8 of IEEE Std C37.13-1990[1]. Of exceptional importance are Thevenin's theorem and the superposition theorem. Thevenin's theorem allows an extensive complex single-phase network to be reduced to a single driving voltage in series with a single impedance, referred to the particular bus under study. The superposition

[1]Information on references can be found in 4.9.

Copyright The Institute of Electrical and Electronics Engineers, Inc.
Provided by IHS under license with IEEE
No reproduction or networking permitted without license from IHS
Not for Resale

theorem allows the local effect of a remote voltage change in one source machine to be evaluated by impressing the magnitude of the voltage change, at its point of origin, on the complete impedance network; the current reading in an individual circuit branch is treated as an adder to the prior current magnitude in that branch. These analytical tools, like the others, have specific restraints that must be observed to obtain valid results.

4.4.7 Respecting the imposed restraints

Throughout this discussion, emphasis has been placed on the importance of respecting the restraints imposed by the analytical procedure in order to obtain valid results. Mention has been made of numerous instances in short-circuit analysis where it is necessary to artificially introduce appropriate corrections when analytical restraints have been violated. One remaining area associated with short-circuit analysis involves variable impedance coefficients. When an arc becomes a series component of the circuit impedance, the *R* it represents is not constant. If it is 100 Ω at a current of 1 A, it might be 0.1 Ω at a current of 1000 A. During each half-cycle of current flow, the arc resistance might traverse this range. It is difficult to determine a proper value to insert in the 60 Hz network. Correctly setting this value of *R* does not compensate for the violation of the restraint that demands that *R* be a constant. The variation in *R* lessens the impedance to high-magnitude current, which results in a wave shape of current that is much more peaked than a sine wave. The current now contains harmonic terms. Since they result from a violation of analytical restraints, they will not appear in the calculated results. Their character and magnitude can be determined by other means and the result artificially introduced into the solution for short-circuit current. A similar type of nonlinearity may be encountered in electromagnetic elements in which iron plays a part in setting the value of *L*. If the ferric parts are subject to large excursions of magnetic density, the value of *L* may be found to drop substantially when the flux density is driven into the saturation region. As with variable *R,* the effect of this restraint violation will result in the appearance of harmonic components in the true circuit current.

4.4.8 Conclusions

The purpose of this review of fundamentals is to obtain a better understanding of the basic complexities involved in ac system short-circuit current calculations. In dealing with the day-to-day practical problems, the analyst should adopt the following goals:

a) Select the optimum location and type of fault to satisfy the purpose of the calculation.
b) Establish the simplest electric circuit model of the problem that will both accomplish this purpose and minimize the complexity of the solution.
c) Recognize the presence of system conditions that violate the restraints imposed by the analytical methods in use.
d) Artificially inject corrections in computed results to compensate if these conditions are large enough to be significant.

Some conclusions of the preceding section apply to the simplified procedures of this chapter. A balanced three-phase fault has been assumed and a simple equivalent circuit has been described. The current *E*/*Z* calculated with the equivalent circuit is an alternating symmetrical rms current, because *E* is the rms voltage. Within specific constraints to be discussed, this

Copyright The Institute of Electrical and Electronics Engineers, Inc.
Provided by IHS under license with IEEE
No reproduction or networking permitted without license from IHS Not for Resale

symmetrical current may be directly compared with equipment ratings, capabilities, or performance characteristics that are expressed as symmetrical rms currents.

The preceding analysis of inductive circuit switching transients indicates that simplified procedures should recognize and account for asymmetry as a system condition. The correction to compensate for asymmetry considers the asymmetrical short-circuit current wave to be composed of two components. One is the ac symmetrical component *E*/*Z*. The other is a dc component initially of maximum possible magnitude, equal to the peak of the initial ac symmetrical component, or, alternatively, of the magnitude corresponding to the highest peak (crest), assuming that the fault occurs at the point on the voltage wave where it creates this condition. At any instant after the fault occurs, the total current is equal to the sum of the ac and dc components (figure 4-9).

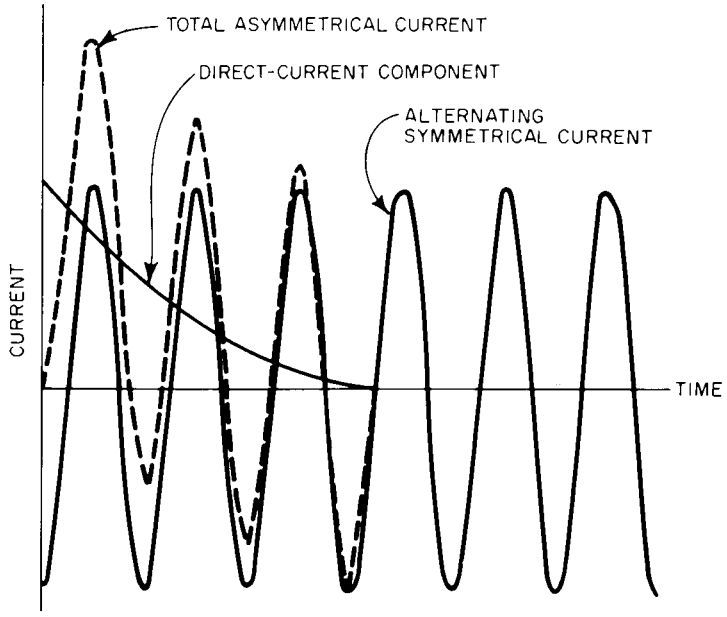

Figure 4-9—Typical system fault current

Since resistance is always present in an actual system, the dc component decays to zero as the stored energy it represents is expended in I^2R loss. The decay is assumed to be an exponential, and its time constant is assumed to be proportional to the ratio of reactance to resistance (*X*/*R* ratio) of the system from source to fault. As the dc component decays, the current gradually changes from asymmetrical to symmetrical (figure 4-9).

Asymmetry is accounted for in simplified calculating procedures by applying multiplying factors to the alternating symmetrical current. A multiplying factor is selected that obtains a resulting estimate of the total (asymmetrical) rms current or the peak (crest) current, as appropriate for comparison with equipment ratings, capabilities, or performance characteristics that are expressed as total (asymmetrical) rms currents or peak (crest) currents.

Copyright The Institute of Electrical and Electronics Engineers, Inc.
Provided by IHS under license with IEEE
No reproduction or networking permitted without license from IHS
Not for Resale

The alternating symmetrical current may also decay with time, as indicated in the discussion of sources of short-circuit current. Changing the impedance representing the machine properly accounts for ac decay of the current to a short circuit at rotating-machine terminals. The same impedance changes are assumed to be applicable when representing rotating machines in extensive power systems.

4.5 Detailed procedure

A significant part of the preparation for a short-circuit current calculation is establishing the impedance of each circuit element and converting impedances to be consistent with each other for combination in series and parallel. Sources of impedance values for circuit elements are nameplates, handbooks, manufacturers' catalogs, tables included in this chapter, and direct contact with the manufacturer.

Two established consistent forms for expressing impedances are ohms and per unit (per unit differs from percent by a factor of 100). Individual equipment impedances are often given in percent, which makes comparisons easy, but percent impedances are rarely used without conversion in system calculations. In this chapter, the per unit form of impedance is used because it is more convenient than the ohmic form when the system contains several voltage levels. Impedances expressed as per unit on a defined base can be combined directly, regardless of how many voltage levels exist from source to fault. To obtain this convenience, the base voltage at each voltage level must be related according to the turns ratios of the interconnecting transformers.

In the per-unit system, there are four base quantities: base apparent power in voltamperes, base voltage, base current, and base impedance. The relationship of base, per unit, and actual quantities is as follows:

$$\text{per-unit quantity (voltage, current, etc.)} = \frac{\text{actual quantity}}{\text{base quantity}}$$

Usually a convenient value is selected for base apparent power in voltamperes, and a base voltage at one level is selected to match the transformer rated voltage at that level. Base voltages at other levels are then established by transformer turns ratios. Base current and base impedance at each level are then obtained by standard relationships. The following formulas apply to three-phase systems, where the base voltage is the line-to-line voltage in volts or kilovolts and the base apparent power is the three-phase apparent power in kilovoltamperes or megavoltamperes:

$$\text{base current (amperes)} = \frac{\text{base kVA (1000)}}{\sqrt{3}\ \text{(base V)}} = \frac{\text{base kVA}}{\sqrt{3}\ \text{(base kV)}}$$

$$= \frac{\text{base MVA } 10^6}{\sqrt{3}\ \text{(base V)}} = \frac{\text{base MVA (1000)}}{\sqrt{3}\ \text{(base kV)}}$$

Copyright The Institute of Electrical and Electronics Engineers, Inc.
Provided by IHS under license with IEEE
No reproduction or networking permitted without license from IHS Not for Resale

$$\text{base impedance (ohms)} = \frac{\text{base V}}{\sqrt{3}\ \text{(base A)}} = \frac{(\text{base V})^2}{\text{base kVA (1000)}}$$

$$= \frac{(\text{base kV})^2(1000)}{\text{base kVA}} = \frac{(\text{base kV})^2}{\text{base MVA}}$$

Impedances of individual power system elements are usually obtained in forms that require conversion to the related bases for a per-unit calculation. Cable impedances are generally expressed in ohms. Converting to per unit using the indicated relationships leads to the following simplified formulas, where the per-unit impedance is Z_{pu}:

$$Z_{pu} = \frac{\text{actual impedance in ohms ((base MVA)}}{(\text{base kV})^2}$$

$$= \frac{\text{actual impedance in ohms (base kVA)}}{(\text{base kV})^2(1000)}$$

Transformer impedances are in percent of self-cooled transformer ratings in kilovoltamperes and are converted using the following:

$$Z_{pu} = \frac{\text{percent impedance (base kVA)}}{\text{kVA rating (100)}}$$

$$= \frac{\text{percent impedance (10) (base MVA)}}{\text{kVA rating}}$$

Motor reactance may be obtained from tables providing per unit reactances on element ratings in kilovoltamperes and are converted using the following:

$$X_{pu} = \frac{\text{per-unit reactance (base kVA)}}{\text{kVA rating}}$$

The procedure for calculating industrial system short-circuit currents consists of the following steps:

a) Step 1: Prepare system diagrams
b) Step 2: Collect and convert impedance data
c) Step 3: Combine impedances
d) Step 4: Calculate short-circuit current

Each step will be discussed in further detail in the following subclauses.

Copyright The Institute of Electrical and Electronics Engineers, Inc.
Provided by IHS under license with IEEE
No reproduction or networking permitted without license from IHS Not for Resale

4.5.1 Step 1: Prepare system diagrams

A one-line diagram of the system should be prepared to show all sources of short-circuit current and all significant circuit elements. Figure 4-10, used for a subsequent example, is a one-line diagram of a hypothetical industrial system.

Impedance information may be entered on the one-line diagram after initial data collection and after conversion. Sometimes it is desirable to prepare a separate diagram showing only the impedances after conversion. If the original circuit is complex and several steps of simplification are required, each may be recorded on additional impedance diagrams as the calculation progresses.

The impedance diagram might show reactances only or it might show both reactances and resistances if a vector calculation is to be made. For calculation of a system *X*/*R* ratio, as described later for high-voltage circuit breaker duties, a resistance diagram showing only the resistances of all circuit elements shall be prepared.

4.5.2 Step 2: Collect and convert impedance data

Impedance data, including both reactance and resistance, should be collected for important elements and converted to per-unit on bases selected for the study. See annex 4A at the end of this chapter for typical values.

Since resistance is not constant but varies with temperature, consideration should be given to the choice of resistance values for study purposes.

For calculations of maximum short-circuit currents to select electric power system equipment, a fully loaded industrial power system is recommended because it has the largest number of motors connected and contributing to short-circuit current. Consequently, “hot” or rated load resistance values are usually accepted for these calculations. The collected data in annex 4A reflect this acceptance; for example, machine *X*/*R* ratios are at rated load, overhead line resistances are at 50 °C, and cable resistances are at 75 °C and 90 °C.

These “hot” resistance values are also acceptable as conservative impedance data for load flows and similar calculations where probable maximum voltage drops and losses are desired results. This multiple usage provides a simplification of data preparation.

There is a concern that system operations at less than full load could reduce equipment and component temperatures, thus lowering resistances and increasing maximum short-circuit currents calculated using impedances. This does not happen in most cases for industrial systems because the reduction in connected motors, at the reduced load and thus in motor contribution to the calculated short-circuit current, more than offsets the possible increase due to reduced resistance and increased *X*/*R* ratio.

In addition, for industrial systems where relatively high values of short-circuit current are expected, the short-circuit point reactance is generally much larger than the resistance and,

Copyright The Institute of Electrical and Electronics Engineers, Inc.
Provided by IHS under license with IEEE
No reproduction or networking permitted without license from IHS Not for Resale

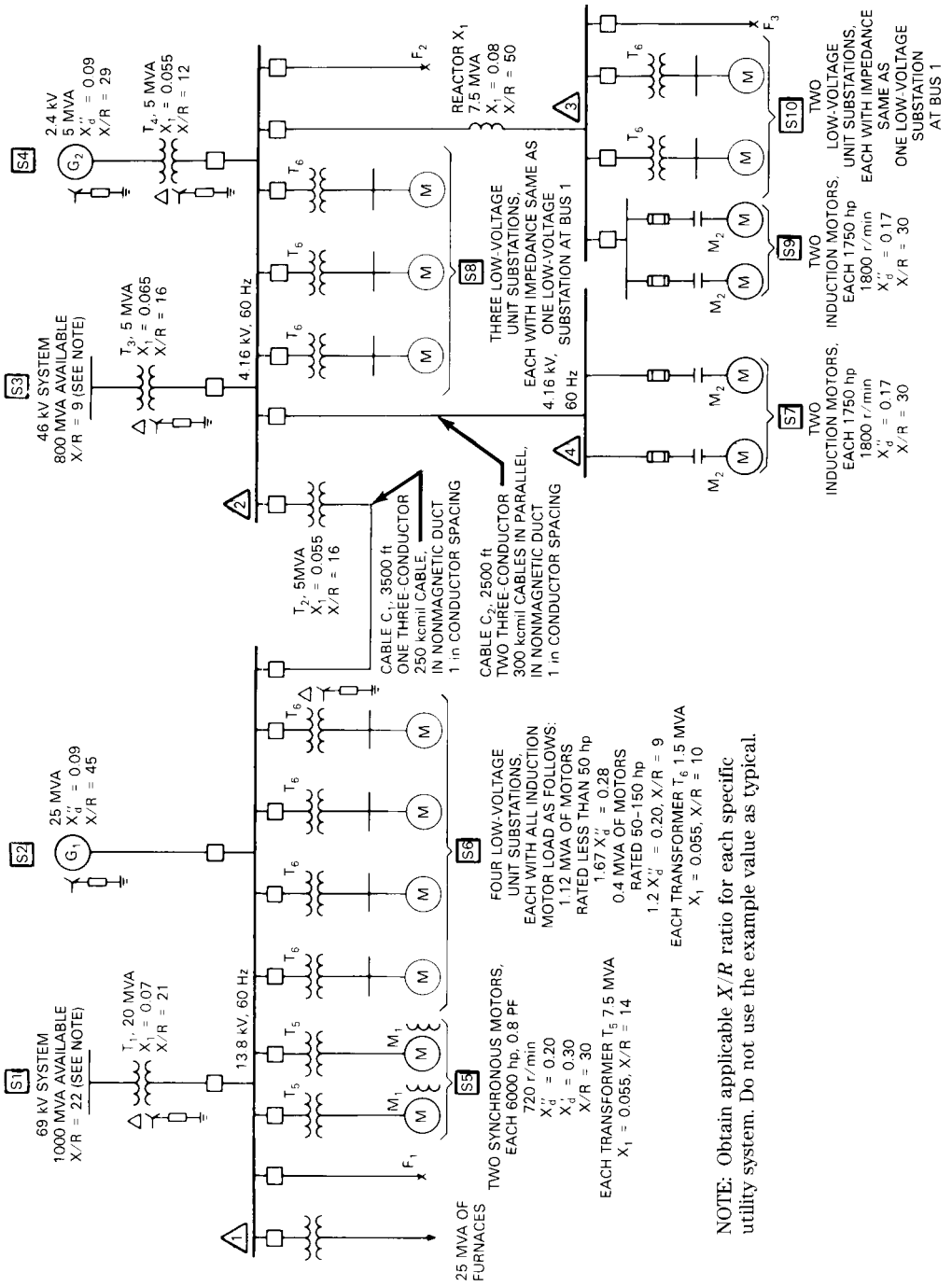

NOTE: Obtain applicable X/R ratio for each specific utility system. Do not use the example value as typical.

Figure 4-10—One-line diagram of industrial system example

Copyright The Institute of Electrical and Electronics Engineers, Inc.
Provided by IHS under license with IEEE
No reproduction or networking permitted without license from IHS

Not for Resale

due to the quadrature relationship of *X* and *R,* a possibly justifiable reduction in "hot" resistance values usually makes no significant difference in fault point impedance.

The effect of reduced resistance at reduced temperature should be examined in particular cases not covered by the general procedures of this chapter. For example, the calculation of the short-circuit current of an individual generator just being energized, before it takes load, should use ambient temperature resistance and *X*/*R* ratios for a conservative result. For industrial plant office buildings, and for other facilities with largely non-motor loads, full load might be applied without delay at start-up and calculations should account for pre-start-up temperatures of components and their resistances. For a low-voltage short circuit at the end of a feeder from a substation to a non-motor load, where the resistance of the feeder circuit is significant in determining short-circuit current magnitude, it may be appropriate to assume a no-load feeder conductor temperature and resistance to calculate a maximum current.

4.5.3 Step 3: Combine impedances

The third step is to combine reactances or vector impedances, and resistances where applicable, to the point of fault into a single equivalent impedance, reactance, or resistance. The equivalent impedance of separate impedances in series is the sum of the separate impedances. The equivalent impedance of separate impedances in parallel is the reciprocal of the sum of the reciprocals of the separate impedances. Three impedances forming a wye or delta configuration can be converted by the following formulas for further reduction (figure 4-11).

a) Wye to delta [figure 4-11(a)]:

$$A = \frac{b \cdot c}{a} + b + c$$

$$B = \frac{a \cdot c}{b} + a + c$$

$$C = \frac{a \cdot b}{c} + a + b$$

b) Delta to wye [figure 4-11(b)]:

$$a = \frac{B \cdot C}{A + B + C}$$

$$b = \frac{A \cdot C}{A + B + C}$$

$$c = \frac{A \cdot B}{A + B + C}$$

4.5.4 Step 4: Calculate short-circuit current

The final step is to calculate the short-circuit current. Calculation details are influenced by the system nominal voltage or voltages and the results desired.

Copyright The Institute of Electrical and Electronics Engineers, Inc.
Provided by IHS under license with IEEE
No reproduction or networking permitted without license from IHS Not for Resale

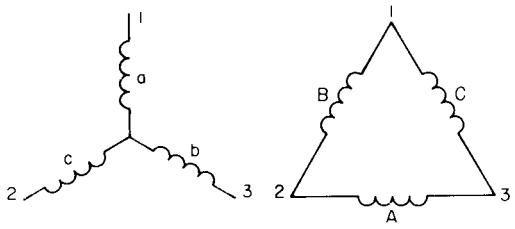

a) Wye to delta

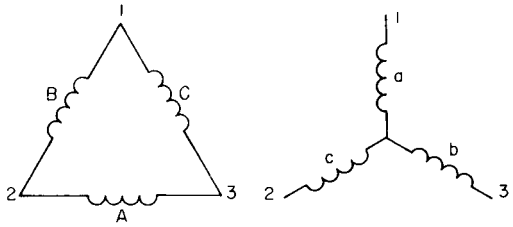

b) Delta to wye

Figure 4-11—Wye and delta configurations

It should be noted that nominal system voltages according to ANSI C84.1-1989 are as follows:

a) Low voltage—less than 1000 V
b) Medium voltage—equal to or greater than 1000 V and less than 100 000 V
c) High voltage—equal to or greater than 100 000 V and equal to or less than 230 000 V

IEEE high-voltage circuit breaker standards, IEEE Std C37.010-1979 and IEEE Std C37.5-1979, define high-voltage circuit breakers as those rated above 1000 V, so these standards cover calculating short-circuit currents for circuit breaker applications in both medium- and high-voltage systems. The results of these calculations are also usable when applying medium- and high-voltage fuses.

This chapter examines three basic networks of selected impedances used for the results most commonly desired:

a) First-cycle duties for fuses and circuit breakers
b) Contact-parting (interrupting) duties for medium- and high-voltage circuit breakers
c) Short-circuit currents at operating times for time-delayed relaying devices

The three networks have the same basic elements except for the impedances of rotating machines. These depend on the purpose of the study. Where interrupting equipment applica-

Copyright The Institute of Electrical and Electronics Engineers, Inc.
Provided by IHS under license with IEEE
No reproduction or networking permitted without license from IHS
Not for Resale

tions are the purpose of the calculation, the differing impedances are based on standard application guides.

4.5.4.1 First-cycle duties for fuses and circuit breakers

For calculations of short-circuit duties to be compared with the interrupting ratings of low-, medium-, or high-voltage fuses or of only low-voltage circuit breakers (according to ANSI C97.1-1972, IEEE Std C37.13-1981, IEEE Std C37.41-1981, NEMA AB 1-1975, and NEMA SG 3-1981), unmodified or modified subtransient impedances are used to represent all rotating machines in the equivalent network.

Low-voltage duties. The standards for interrupting equipment allow a modified subtransient reactance for a group of low-voltage induction and synchronous motors fed from a low-voltage substation. If the total of motor horsepower ratings at 480 or 600 V is approximately equal to (or less than) the transformer self-cooled rating in kilovoltamperes, a reactance of 0.25 per unit based on the transformer self-cooled rating may be used as a single impedance to represent the group of motors.

Medium- and high-voltage short-circuit duties calculated with these impedances are used when applying medium- or high-voltage fuses and when finding medium- or high-voltage system available short-circuit duties for use as factors in subsequent low-voltage calculations.

M*edium- and high-voltage duties*. For calculations of short-circuit duties to be compared with only medium- or high-voltage circuit breaker closing and latching capabilities according to IEEE Std C37.010-1979 (post-1964 rating basis) or momentary ratings according to the withdrawn standard, IEEE Std C37.5-1979 (pre-1964 rating basis), multiplying factors shown in the first cycle column of Table 4-1 are applied to rotating machine reactances (or impedances). For motors, this approximates the ac decay during the first cycle of motor short-circuit current contribution.

The preceding description indicates that the different treatments of induction motors might uneconomically necessitate two first-cycle calculations for comprehensive industrial system short-circuit studies covering both low and high (including medium) voltages, if procedures of applicable standards are followed without interpretation. The high- (including medium-) voltage circuit breaker application procedure described in IEEE Std C37.010-1979 and IEEE Std C37.5-1979 defines three induction motor size groups, recommends omitting the group of motors each less than 50 hp, and applies multiplying factors of 1.2 or 1.0 to subtransient impedances of motors in the groups of larger and larger sizes. The low-voltage circuit breaker application guide, IEEE Std C37.13-1981, recommends subtransient impedances (typically 0.16 to 0.20 per unit) for all motors and allows estimates of typical symmetrical first-cycle contributions from connected low-voltage motors to substation bus short circuits at 4 times rated current (the equivalent of 0.25 per unit impedance).

The *4 times rated current* short-circuit contribution estimate is determined approximately in the low-voltage circuit breaker application guide, IEEE Std C37.13-1981, by assuming a typical connected group having 75% induction motors at 3.6 times rated current and 25% synchronous motors at 4.8 times rated. Other typical group assumptions could be made; for

Copyright The Institute of Electrical and Electronics Engineers, Inc.
Provided by IHS under license with IEEE
No reproduction or networking permitted without license from IHS Not for Resale

Table 4-1—Rotating-machine reactance (or impedance) multipliers

Type of rotating machine	First-cycle network	Interrupting network
All turbine generators; all hydrogenerators with amortisseur windings; all condensers	1.0 X_d''	1.0 X_d''
Hydrogenerators without amortisseur windings	0.75 X_d'	0.75 X_d'
All synchronous motors	1.0 X_d''	1.5 X_d''
Induction motors		
Above 1000 hp at 1800 r/min or less	1.0 X_d''	1.5 X_d''
Above 250 hp at 3600 r/min	1.0 X_d''	1.5 X_d''
All others, 50 hp and above	1.2 X_d''	3.0 X_d''
All smaller than 50 hp	neglect	neglect

Source: Based on IEEE Std C37.010-1979 and IEEE Std C37.5-1979.

example, many groups now have larger size low-voltage induction motors instead of synchronous motors, but these larger motors also have higher and longer lasting short-circuit current contributions. Accordingly, a *4 times rated current* approximation continues to be accepted practice when the load is all induction motors of unspecified sizes.

Combination first-cycle network. To simplify comprehensive industrial system calculations, a single combination first-cycle network is recommended to replace the two different networks just described. It is based on the following interpretation of IEEE Std C37.010-1979, IEEE Std C37.5-1979, and IEEE Std C37.13-1990. Because the initial symmetrical rms magnitude of the current contributed to a terminal short circuit might be 6 times rated for a typical induction motor, using a *4.8 times rated current* first-cycle estimate for the large low-voltage induction motors (described as *all others, 50 hp and above* in Table 4-1) is effectively the same as multiplying subtransient impedance by approximately 1.2. For this motor group, there is reasonable correspondence of low- and high-voltage procedures. For smaller induction motors (*all smaller than 50 hp* in Table 4-1) a conservative estimate is the *3.6 times rated current* (equivalent of 0.28 per unit impedance) first-cycle assumption of low-voltage standards, and this is effectively the same as multiplying subtransient impedance by 1.67.

With this interpretation as a basis, the following induction motor treatment is recommended to obtain a single-combination first-cycle short-circuit calculation for multivoltage industrial systems:

Copyright The Institute of Electrical and Electronics Engineers, Inc.
Provided by IHS under license with IEEE
No reproduction or networking permitted without license from IHS
Not for Resale

a) Include connected motors, each less than 50 hp, using either a 1.67 multiplying factor for subtransient impedances, if available, or an estimated first-cycle impedance of 0.28 based on motor rating.

b) Include larger motors using the impedance multiplying factors of Table 4-1. Most low-voltage motors 50 hp and larger are in the 1.2 times subtransient reactance group. An appropriate estimate for this group is first-cycle impedance of 0.20 per unit based on motor rating.

The last two lines of Table 4-1 are replaced by Table 4-2 for the recommended combination network.

The single-combination first-cycle network adds conservatism to both low- and high-voltage standard calculations. It increases calculated first-cycle short-circuit currents at high voltage by the contributions from small induction motors and at low voltage, when many motors are 50 hp or larger, by the increased contribution of larger low-voltage induction motors.

Table 4-2—Combined network rotating machine reactance (or impedance) multipliers
(changes to table 4-1 for comprehensive multivoltage system calculations)

Type of rotating machine	First-cycle network	Interrupting network
Induction motors		
All others, 50 hp and above	1.2 X_d'' *	3.0 X_d'' †
All smaller than 50 hp	1.67 X_d'' ‡	neglect

*Or estimate the first-cycle network $X = 0.20$ per unit based on motor rating.
†Or estimate the interrupting network $X = 0.50$ per unit based on motor rating.
‡Or estimate the first-cycle network $X = 0.28$ per unit based on motor rating.

Once the first-cycle network has been established and its impedances are converted and reduced to a single equivalent per-unit impedance Z_{pu} (or reactance X_{pu}) for each fault point of interest, the symmetrical short-circuit current duty is calculated by dividing the per-unit prefault operating voltage E_{pu} by Z_{pu} (or X_{pu}) and multiplying by base current:

$$I_{sc\ sym} = \frac{E_{pu}}{Z_{pu}} \cdot I_{base}$$

where $I_{sc\ sym}$ is a three-phase symmetrical first cycle bolted short-circuit (zero impedance at the short-circuit point) rms current.

Copyright The Institute of Electrical and Electronics Engineers, Inc.
Provided by IHS under license with IEEE
No reproduction or networking permitted without license from IHS Not for Resale

The calculated short-circuit current results for low-voltage buses are now directly applicable for comparison with low-voltage circuit breakers, fuses, and other equipment short-circuit ratings or capabilities expressed as symmetrical rms currents. For low-voltage circuit breakers, ratings incorporate an asymmetrical capability as necessary for a circuit *X*/*R* ratio of 6.6 or less (short-circuit power factor of 15% or greater). A typical system served by a transformer rated 1000 or 1500 kVA will usually have a short-circuit *X*/*R* ratio within these limits. For larger or multitransformer systems, it is advisable to check the *X*/*R* ratio; if it is greater than 6.6, the circuit breaker or fuse application should be based on asymmetrical current limitations (see IEEE Std C37.13-1990).

When the equipment rating or capability is expressed as a first-cycle total (asymmetrical) rms current, or first-cycle crest current, the calculated symmetrical short-circuit current duty is multiplied by a corresponding multiplying factor found in the applicable standard to obtain the appropriate first-cycle total (asymmetrical) rms current duty, or first-cycle crest current duty, for comparison.

Closing and latching capabilities of high-voltage circuit breakers preferred before 1987 (or momentary ratings of older units) are total (asymmetrical) rms currents. The appropriate calculated first-cycle duty for comparison is obtained using the 1.6 multiplier specified in IEEE Std C37.010-1979 and IEEE Std C37.5-1979 and the fault point reactance X_{pu} (or impedance Z_{pu}) obtained by network reduction:

$$I_{sc\ tot} = 1.6 \cdot \frac{E_{pu}}{X_{pu}} \cdot I_{base}$$

where $I_{sc\ tot}$ is the maximum total (asymmetrical) rms magnitude of the current with highest asymmetry during the first cycle of a three-phase bolted (zero impedance at the short-circuit point) short circuit.

Closing and latching capabilities of high-voltage circuit breakers preferred after 1987 are crest currents. The appropriate calculated first-cycle duty for comparison is obtained using the 2.7 multiplier specified in IEEE Std C37.010-1979 and the fault point reactance X_{pu} (or impedance Z_{pu} obtained by network reduction:

$$I_{sc\ crest} = 2.7 \cdot \frac{E_{pu}}{X_{pu}} \cdot I_{base}$$

where $I_{sc\ crest}$ is the maximum possible crest for one of the currents during the first cycle of a three-phase bolted (zero impedance at the short-circuit point) short circuit.

4.5.4.2 Contact-parting (interrupting) duties for high-voltage (above 1 kV, including medium-voltage) circuit breakers

First considered are the duties for comparison with interrupting ratings of older circuit breakers rated on the pre-1964 total rms current rating basis. The procedures of IEEE Std C37.5-1979 apply.

Copyright The Institute of Electrical and Electronics Engineers, Inc.
Provided by IHS under license with IEEE
No reproduction or networking permitted without license from IHS
Not for Resale

The multiplying factors for reactances of rotating machines in the network are obtained from the "Interrupting network" columns of tables 4-1 and 4-2.

For these interrupting duty calculations, the resistance (R) network is also necessary. In the resistance network, each rotating machine resistance value must be multiplied by the factor from table 4-1 that was used to modify the corresponding rotating machine reactance.

At the point of short circuit, reduce the reactance network to a single equivalent reactance X_{pu} and reduce the resistance network to a single equivalent resistance R_{pu}. Determine the X/R ratio by dividing X_{pu} by R_{pu}; determine E_{pu}, the prefault operating voltage; and determine E/X by dividing E_{pu} by X_{pu}.

Select the multiplying factor for E/X correction from the curves of figures 4-12 and 4-13. To use the curves, it is necessary to know the circuit breaker contact parting time as well as the proximity of generators to the point of short circuit (local or remote). Local generator multiplying factors apply only when generators that are predominant contributors to short-circuit currents are located in close electrical proximity to the fault as defined in the caption of figure 4-12 (and figure 4-14).

Minimum contact parting times are usually used and are defined in table 4-3.

Multiply E_{pu}/X_{pu} by the multiplying factor and the base current:

$$\text{multiplying factor} \cdot \frac{E_{pu}}{X_{pu}} \cdot I_{base}$$

This is the three-phase, contact-parting time, bolted (zero impedance at the short-circuit point), *calculated, total (asymmetrical), rms short-circuit-current interrupting duty* to be compared with the circuit-breaker interrupting capability. For older circuit breakers with total three-phase interrupting ratings in MVA, the short-circuit-current capability in kA is found by dividing the rating in MVA by $\sqrt{3}$ and by the operating voltage in kV when the voltage is between the rated maximum and minimum limits.

$$\text{asymmetrical interrupting capability in kA} = \frac{\text{interrupting rating in MVA}}{\sqrt{3} \cdot \text{operating voltage in kV}}$$

The minimum-limit voltage calculation applies for lower voltages.

Next, consider the duties for comparison with the short-circuit (interrupting) capabilities of circuit breakers rated on the post-1964 symmetrical rms current basis. Procedures specified in IEEE Std C37.010-1979 apply to calculating duties for these circuit breakers.

E/X and the X/R ratio for a given fault point are as already calculated.

Copyright The Institute of Electrical and Electronics Engineers, Inc.
Provided by IHS under license with IEEE
No reproduction or networking permitted without license from IHS Not for Resale

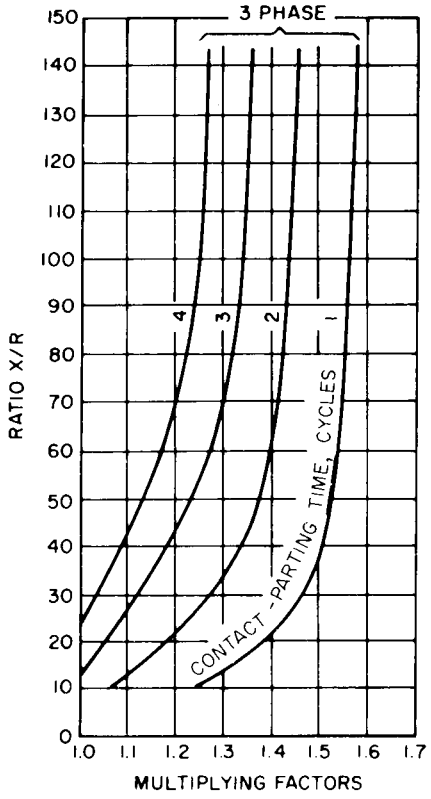

NOTE: Fed predominantly from generators through no more than one transformation or with external reactance in series that is less than 1.5 times generator subtransient reactance (IEEE Std C37.5-1979).

Figure 4-12—Multiplying factors (total current rating basis) for three-phase faults (local)

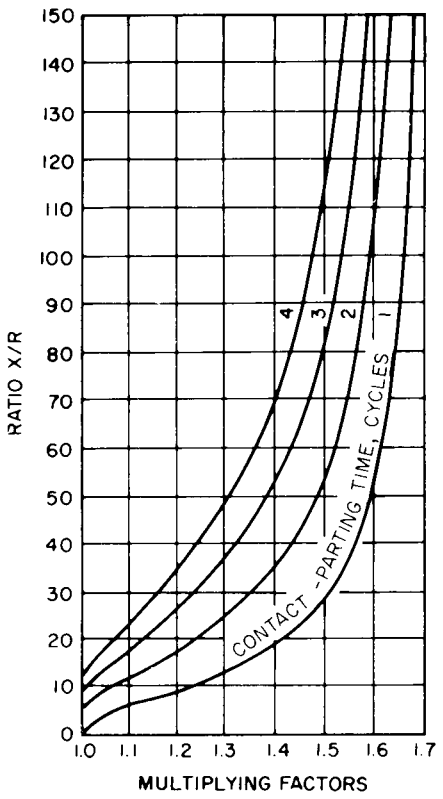

NOTE: Fed predominantly through two or more transformations or with external reactance in series equal to or above 1.5 times generator subtransient reactance (IEEE Std C37.5-1979).

Figure 4-13—Multiplying factors (total current rating basis) for three-phase and line-to-ground faults (remote)

Copyright The Institute of Electrical and Electronics Engineers, Inc.
Provided by IHS under license with IEEE
No reproduction or networking permitted without license from IHS
Not for Resale

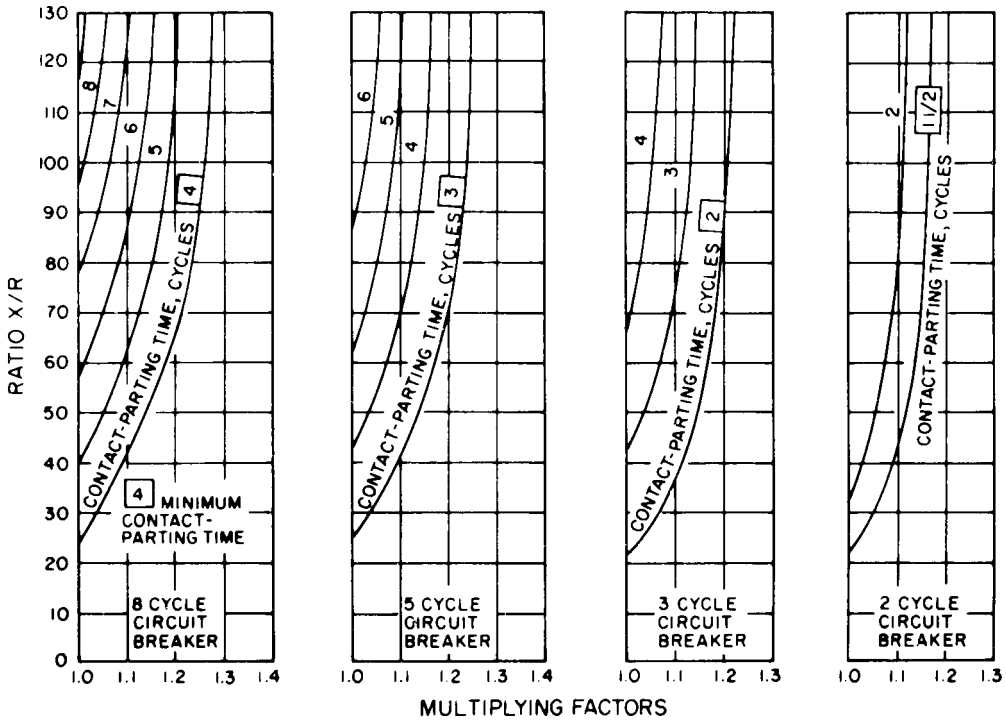

NOTE: Through no more than one transformation or with external reactance in series that is less than 1.5 times generator subtransient reactance (IEEE Std C37.010-1979).

Figure 4-14—Multiplying factors for three-phase faults fed predominantly from generators (local)

Table 4-3—Definition of minimum contact-parting time for ac high-voltage circuit breakers

Rated interrupting time, cycles at 60 Hz	Minimum contact-parting time, cycles at 60 Hz
8	4
5	3
3	2
2	1.5

Source: Based on IEEE Std C37.010-1979 and IEEE Std C37.5-1979.

Copyright The Institute of Electrical and Electronics Engineers, Inc.
Provided by IHS under license with IEEE
No reproduction or networking permitted without license from IHS Not for Resale

Select the multiplying factor for *E/X* correction from the curves of figures 4-14 and 4-15. To use the curves, it is necessary to know the circuit breaker's contact parting time as well as the proximity of generators to the fault point (local or remote), as before.

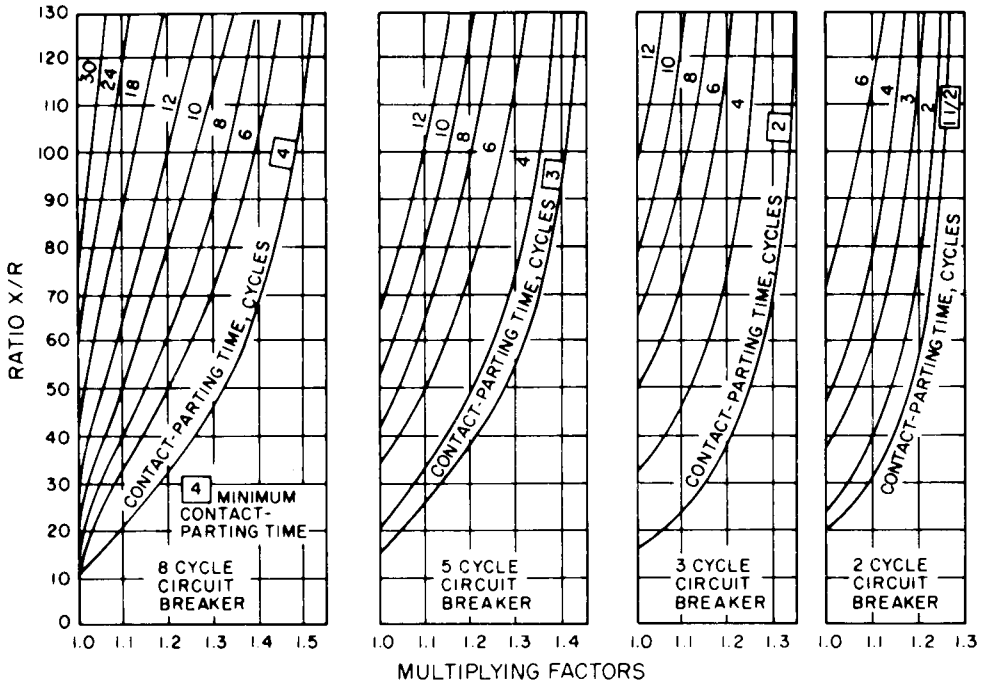

NOTE: Through two or more transformations or with external reactance in series that is equal to or above 1.5 times generator subtransient reactance (IEEE Std C37.010-1979).

Figure 4-15—Multiplying factors for three-phase and line-to-ground faults fed predominantly from generators (remote)

Multiply E_{pu}/X_{pu} by the multiplying factor and the base current:

$$\text{multiplying factor} \cdot \frac{E_{pu}}{X_{pu}} \cdot I_{base}$$

The result is the *calculated rms short-circuit-current interrupting duty* to be compared with the symmetrical current interrupting capability (based on rating) of a circuit breaker. (Note that the *calculated interrupting duty* is truly symmetrical only if the multiplying factor for *E/X* is 1.0.) The symmetrical current-interrupting capability of the circuit breaker is calculated as follows:

$$\text{symmetrical interrupting capability} = \frac{(\text{rated } I_{sc})(\text{rated maximum} E)}{\text{operating} E}$$

Copyright The Institute of Electrical and Electronics Engineers, Inc.
Provided by IHS under license with IEEE
No reproduction or networking permitted without license from IHS
Not for Resale

This calculated current shall not exceed the maximum symmetrical current-interrupting capability listed for the circuit breaker.

The calculating procedures described for first-cycle and interrupting networks are different in several respects from procedures detailed in earlier editions of this publication that were based on standards now superseded. The differences are intended to account more accurately for contributions to high-voltage interrupting duty from large induction motors, for the exponential decay of the dc component of short-circuit current, and for the ac decay of contributions from nearby generators.

4.5.4.3 Short-circuit currents for time-delayed relaying devices

For the application of instantaneous relays, the value of the first-cycle short-circuit current determined by the first-cycle network should be used. For an application of time delay relays beyond six cycles, the equivalent system network representation will include only generators and passive elements, such as transformers and cables between the generators and the point of short circuit. The generators are represented by transient impedance or a larger impedance related to the magnitude of decaying generator short-circuit current at the specified calculation time. All motor contributions are omitted. Only the generators that contribute short-circuit current through the relay under consideration to the short-circuit point are considered for the relay application. The dc component will have decayed to near zero and is not considered. The short-circuit symmetrical rms current is E_{pu}/X_{pu}, where X_{pu} is derived from the equivalent reactance network consisting of generators and passive equipment (cables, transformers, etc.) in the short-circuit current paths protected by the relays.

4.6 Example of short-circuit current calculation for a power system with several voltage levels

4.6.1 General discussion

The three-phase 60 Hz power system used for this example is shown in figure 4-10. For purposes of the example, buses are numbered 1 through 4 with numbers shown in triangles, and rotating machine sources of short-circuit currents are numbered S1 through S10 with numbers shown in squares. Groups of similar rotating machines are treated as single sources, each with a rating equal to the sum of the ratings in the group and the characteristics of the typical machine in the group.

The purpose of the example is to calculate short-circuit duties for comparison with ratings or capabilities of circuit breakers applied at buses 1, 2, and 3. Separate, three-phase, bolted, short circuits are assumed at F_1, F_2, and F_3, one at a time. When F_1 is the short circuit where current is being calculated, bus 1 is called the *fault bus*.

All fault buses are at primary distribution voltages of 13.8 or 4.16 kV. Interrupting-duty calculations for their circuit breakers are based on IEEE Std C37.010-1979 and IEEE Std C37.5-1979, which cover applications of high-voltage circuit breakers (over 1000 V, including medium voltage). First-cycle duties are calculated with the previously described single-com-

Copyright The Institute of Electrical and Electronics Engineers, Inc.
Provided by IHS under license with IEEE
No reproduction or networking permitted without license from IHS Not for Resale

bination network also satisfying requirements for low-voltage circuit breaker applications in IEEE Std C37.13-1981 and for low- and high-voltage fuses.

Note that the connected motor load assumed for the low-voltage unit substations of this example is lower than that observed for many actual substations. Experience has shown that the rated kVA summation for connected motors often greatly exceeds substation transformer kVA. This is a factor to be considered in studies intended to account for future growth.

4.6.2 Utility system data

In-plant generators operating in parallel with utility system ties are the main sources both at bus 1 and at bus 2. The representation of remote utility generators for plant short-circuit calculations is often based on the utility available short-circuit current, or short-circuit apparent power in MVA, delivered by the utility at a specified voltage from all sources outside the plant not including contributions from in-plant sources. This utility short-circuit contribution should be the highest applicable magnitude, probably future rather than present for conservative equipment selection, and should also specify the *X*/*R* ratio. These data are converted to an equivalent impedance. Obtaining corresponding equivalent impedance data directly from the utility is equally useful.

4.6.3 Per-unit calculations and base quantities

This example uses per-unit quantities for calculations. The base for all per-unit power quantities throughout the system is 10 MVA (any other value could have been selected). Voltage bases are different for different system voltage levels, but it is necessary for all of them to be related by the turns ratios of interconnecting transformers, as specified in kV at each numbered bus in figure 4-10. Any actual quantity is the per-unit magnitude of that quantity multiplied by the applicable base. For example, 1.1 per-unit voltage at bus 1 is actually 1.1 times the 13.8 kV base voltage at bus 1 = 15.18 kV. Per-unit system bases and actual quantities have identical physical relationships. For example, in three-phase systems the relationship shown in the following equation applies both to actual quantities and to bases of per-unit quantities:

$$\text{total MVA} = \sqrt{3}(E_{\text{L-L}} \text{ in kV})(I_{\text{line}} \text{ in kA})$$

Other useful base quantities for this example, derived using the 10 MVA base and the base voltages of figure 4-10 in the equations of 4.5, are listed as follows:

Base line-to-line voltage $E_{\text{L-L}}$

	13.8 kV	**4.16 kV**
Base line current (kA)	0.4184	1.388
Base line-to-neutral impedance (Ω)	19.04	1.73

Copyright The Institute of Electrical and Electronics Engineers, Inc.
Provided by IHS under license with IEEE
No reproduction or networking permitted without license from IHS
Not for Resale

This example calculates at each fault point a balanced per-unit three-phase short-circuit current duty using one of three identical per-unit line-to-neutral positive-sequence circuits, energized by per-unit line-to-neutral voltage. Only line-to-line base voltages are listed. For balanced three-phase circuits, line-to-line voltages in per unit of these bases are identical to line-to-neutral voltages in per unit of their corresponding line-to-neutral base voltages.

4.6.4 Impedances represented by reactances

The usual calculation of short-circuit duties at voltages over 1000 V involves circuits in which resistance is small with respect to reactance, so manual computations are simplified by omitting resistances from the circuit. The slight error introduced makes the solution conservative. This example employs this simplification by using only the reactances of elements when finding the magnitudes of short-circuit duties. However, element resistance data are necessary to determine *X*/*R* ratios as described later in this example.

4.6.5 Equivalent circuit variations based on time and standards

Calculations of high-voltage circuit breaker short-circuit current duties may make use of several equivalent circuits for the power system, depending on the time after short-circuit inception when duties are calculated and on the procedure described in the standard used as a basis.

The circuit used for calculating first-cycle short-circuit current duties uses subtransient reactance, sometimes modified as shown in tables 4-1 and 4-2, for all rotating machine sources of short-circuit current. Synchronous machines and large induction motors (over 250 hp at 3600 r/min or 1000 hp at 0–1800 r/min) are represented with unmodified subtransient reactance. Medium induction motors (all other induction motors 50 hp and above) have subtransient reactance multiplied by 1.2 (or first-cycle *X* is estimated at 0.20 per unit). Small induction motors (less than 50 hp each) have subtransient reactance multiplied by 1.67 (or first-cycle X is estimated at 0.28 per unit).

The circuit used for calculating short-circuit (interrupting) duties, at circuit-breaker minimum-contact parting times of 1.5 to 4 cycles after the short-circuit starts, retains synchronous generator subtransient reactance unchanged. It also represents synchronous motors and large induction motors with subtransient reactance multiplied by 1.5, as well as medium induction motors with subtransient reactance multiplied by 3.0 (or interrupting *X* is estimated at 0.50 per unit); it neglects induction motors with less than 50 hp.

Passive element reactances are the same in all equivalent circuits.

Resistances are necessary to find fault point *X*/*R* ratios used in short-circuit (interrupting) duty calculations based on IEEE Std C37.010-1979 and IEEE Std C37.5-1979. The fault point *X*/*R* ratio is the fault point *X* divided by the fault point *R*. A fault point *X* is found by reducing the reactance circuit described in preceding paragraphs to a single equivalent *X* at the fault point. A fault point *R* is found by reducing a related resistance-only circuit. This is derived from the reactance circuit by substituting the resistance in place of the reactance of each element, obtaining the resistance value by dividing the element reactance by the element

--`,,`,,`-`-`,,`,,`,`,,`---

Copyright The Institute of Electrical and Electronics Engineers, Inc.
Provided by IHS under license with IEEE
No reproduction or networking permitted without license from IHS Not for Resale

X/*R* ratio. For motors whose subtransient reactance is increased by a multiplying factor, the same factor must be applied to the resistance in order to preserve the *X*/*R* ratio for the motor.

The *X*/*R* data for power system elements of this example, shown in figure 4-10, are medium typical data obtained in most cases from tables and graphs that are included in the applicable standards and are reproduced in annex 4A at the end of this chapter.

The approximately 30-cycle network often is a minimum source representation intended to investigate whether minimum short-circuit currents are sufficient to operate current actuated relays. Minimum source circuits might apply at night or when production lines are down for any reason. Some of the source circuit breakers may be open and all motor circuits may be off. In-plant generators are represented with transient reactance or a larger reactance related to the magnitude of decaying generator short-circuit current at the desired calculation time, for this example assumed at 1.5 times subtransient reactance in the absence of better information.

4.6.6 Impedance data and conversions to per unit

Reactances of passive elements, obtained from figure 4-10, are listed in table 4-4, along with the conversion of each reactance to per unit on the 10 MVA base.

Table 4-4—Passive element reactances in per unit, 10 MVA base

Transformer T_1, $X = 0.07\ (10/20) = 0.035$ per unit
Transformer T_2, $X = 0.055\ (10/5) = 0.110$ per unit
Transformer T_3, $X = 0.065\ (10/5) = 0.130$ per unit
Transformer T_4, $X = 0.055\ (10/5) = 0.110$ per unit
Transformer T_5, $X = 0.055\ (10/7.5) = 0.0734$ per unit
Transformer T_6, $X = 0.055\ (10/1.5) = 0.367$ per unit
Reactor X_1, $X = 0.08\ (10/7.5) = 0.107$ per unit
Cable C_1, from tables 4A-3 and 4A-6 for 250 kcmil at 1 in spacing, $X = 0.0922–0.0571 = 0.0351\ \Omega$/1000 ft (There are no reactance corrections as this is three-conductor cable in nonmagnetic duct.)
For 3500 ft of cable, the conversion to per unit on a 10 MVA 13.8 kV base is $X = (3500/1000)\ (0.0351/19.04) = 0.0064$ per unit
Cable C_2, 300 kcmil at 1 in spacing, $X = 0.0902–0.0571 = 0.0331\ \Omega$/1000 ft
For 2500 ft of two cables in parallel at 4.16 kV, $X = (2500/1000)\ (1/2)\ (0.0331/1.73) = 0.0239$ per unit

Copyright The Institute of Electrical and Electronics Engineers, Inc.
Provided by IHS under license with IEEE
No reproduction or networking permitted without license from IHS
Not for Resale

Most of the data given in figure 4-10 are per unit, based on the equipment nameplate rating. Any original percent impedance data is divided by 100 to obtain a per-unit impedance for figure 4-10. Conversions are changes of MVA base: multiplication by the ratio of the new MVA base (10 MVA for the example) to the old MVA base (rated MVA). When the equipment's rated voltage is not the same as the base voltage, it is also necessary to make voltage base conversions using the square of the ratio of rated voltage to example base voltage as the multiplier (see 4.5). This is not illustrated in this example.

Physical descriptions of cables are used to establish their reactances in ohms based on data in tables 4A-3 and 4A-6. Dividing an impedance in ohms by the base impedance in ohms converts it to per unit.

4.6.7 Subtransient reactances of rotating machines, and reactances for the circuit to calculate first-cycle short-circuit current duties

Subtransient reactances of rotating machine sources of short-circuit current modified for the combination first-cycle network based on interpretation of reference low- and high-voltage standards—IEEE Std C37.010-1979, IEEE Std C37.5-1979, and IEEE Std C37.13-1990—are listed in table 4-5 together with conversions to per unit on the study base.

Table 4-5—Subtransient reactances of rotating machines, modified for first-cycle (momentary) duty calculations in per unit, 10 MVA base

69 kV system, $X = 1.0\ (10/1000) = 0.01$ per unit Generator 1, $X_d'' = 0.09\ (10/25) = 0.036$ per unit
46 kV system, $X = 1.0\ (10/800) = 0.0125$ per unit Generator 2, $X_d'' = 0.09\ (10/5) = 0.18$ per unit
Large synchronous motor M_1, using the assumption that the horsepower rating of an 0.8 power factor machine is its kVA rating, $X_d'' = 0.20\ (10/6) = 0.333$ per unit, each motor
Large induction motor M_2, using the assumption that hp = kVA, $X_d'' = 0.17\ (10/1.75) = 0.971$ per unit
Low-voltage motor group, 0.4 MVA, from 50 to 150 hp, first-cycle $X = 1.2\ X_d'' = 0.20\ (10/0.4) = 5.0$ per unit
Low-voltage motor group, 1.12 MVA, less than 50 hp each, first-cycle $X = 1.67\ X_d'' = 0.28\ (10/1.12) = 2.5$ per unit

The reactance representing the rotating machines of a utility system is found by observing that the available short-circuit apparent power (MVA) is 1.0 per unit of a base equal to itself, and that 1.0 per-unit short-circuit apparent power (MVA) corresponds to 1.0 per-unit reactance (X) at 1.0 per-unit voltage (V), then converting this reactance to the study base.

The circuit development and impedance simplifications are described subsequently.

Copyright The Institute of Electrical and Electronics Engineers, Inc.
Provided by IHS under license with IEEE
No reproduction or networking permitted without license from IHS Not for Resale

4.6.8 Reactances and resistances for the circuit to calculate short-circuit (interrupting) current duties

Reactances, and resistances derived from them as described previously, are detailed in table 4-6.

Table 4-6—X/R ratios and resistances for ac high-voltage circuit breaker contact-parting time (interrupting) short-circuit duties

Transformer T_1,	$X/R = 21$,	$R = 0.035/21 = 0.001\ 667$ per unit
Transformer T_2,	$X/R = 16$,	$R = 0.110/16 = 0.006\ 88$ per unit
Transformer T_3,	$X/R = 16$,	$R = 0.130/16 = 0.008\ 12$ per unit
Transformer T_4,	$X/R = 12$,	$R = 0.11/12 = 0.009\ 16$ per unit
Transformer T_5,	$X/R = 14$,	$R = 0.0734/14 = 0.005\ 24$ per unit
Transformer T_6,	$X/R = 10$,	$R = 0.0367/10 = 0.003\ 67$ per unit
Reactor X_1,	$X/R = 50$,	$R = 0.107/50 = 0.002\ 14$ per unit
Cable C_1, ac resistance at 50 °C from table 4A-3 is 0.0487 Ω/1000 ft, correction for 75 °C = 1.087 For 3500 ft of cable converted to per unit on a 10 MVA 13.8 kV base, $R = (3500/1000)\ (1.087)\ (0.0487/19.04) = 0.009\ 72$ per unit		
Cable C_2, ac resistance from table 4A-3 is 0.0407 Ω/1000 ft For 2500 ft of two cables in parallel on a 10 MVA 4.16 kV base at 75 °C, $R = (2500/1000)\ (1.087/2)\ (0.0407/1.73) = 0.0320$ per unit		
69 kV system, Generator 1,	$X/R = 22$, $X/R = 45$,	$R = 0.01/22 = 0.000\ 445$ per unit $R = 0.036/45 = 0.0008$ per unit
46 kV system, Generator 2,	$X/R = 9$, $X/R = 29$,	$R = 0.0125/9 = 0.001\ 389$ per unit $R = 0.18/29 = 0.0062$ per unit
Large synchronous motor M_1, using $X = 1.5\ X_d'' = 1.5\ (0.333) = 0.5$ per unit, $X/R = 30$, $R = 0.5/30 = 0.016\ 67$ per unit		
Large induction motor M_2, using $X = 1.5\ X_d'' = 1.5\ (0.971) = 1.457$ per unit, $X/R = 30$, $R = 1.457/30 = 0.048\ 57$ per unit		
Low-voltage motor group 50–150 hp, using $X = 3.0\ X_d'' = (3/1.2)\ (5.0) = 12.5$ per unit, $X/R = 9$, $R = 12.5/9 = 1.389$ per unit		
Low-voltage motor group below 50 hp is omitted		

NOTE—See tables 4-4 and 4-5 for reactances of passive elements, utility systems, and generators.

4.6.9 Reactances for the circuit to calculate approximately 30-cycle minimum short-circuit currents

Minimum generation for this problem (defined by system operators) occurs with Generator 1 down, the 46 kV utility system connection open, and all motors disconnected. Reactance details are given in table 4-7.

Copyright The Institute of Electrical and Electronics Engineers, Inc.
Provided by IHS under license with IEEE
No reproduction or networking permitted without license from IHS
Not for Resale

Table 4-7—Reactances for approximately 30-cycle short-circuit currents

Utility system S_1 reactance is unchanged
Generator 2, S_4 is represented with reactance larger than subtransient, assumed at $1.5 X_d'' = 1.5 \cdot 0.18 = 0.27$ per unit
All other sources, S_2, S_3, S_5–S_{10}, are disconnected

4.6.10 Circuit and calculation of first-cycle short-circuit current duties

The circuit used for calculating the symmetrical alternating currents of the first-cycle short-circuit duties based on a combination of current circuit breaker and fuse standards is shown in figure 4-16(a). Source circuits S_5 through S_{10} have been simplified using the series and parallel combinations indicated in table 4-8, based on the per-unit element impedances obtained directly from table 4-4 and table 4-5. The identities of buses and sources are retained in figure 4-16(a), even after the individual element impedances from figure 4-10 lose identification when reactances are combined.

Table 4-8—Reactances for figure 4-16(a)

S_5 to bus 1, two circuits in parallel, each with M_1 motor X_d'' and T_5 transformer X, $X_d'' = (1/2)\ (0.3333 + 0.0734) = 0.2034$ per unit
S_6 to bus 1 (after combining all the motors of one substation for an equivalent low-voltage motor $X_d'' = 2.5\ (5)/(2.5 + 5) = 1.667$, four circuits in parallel, each with an equivalent motor X_d'' in series with a T_6 transformer, $X_d'' = (1/4)\ (1.667 + 0.367) = (1/4)\ (2.034) = 0.5085$ per unit
S_7 to bus 4, two M_2 induction motors, $X_d'' = (1/2)\ (0.971) = 0.4855$ per unit
S_8 to bus 2, three circuits, each as for the S_6 to bus 1 calculation, $X_d'' = (1/3)\ (2.034) = 0.678$ per unit
S_9 to bus 3, two M_2 induction motors, $X_d'' = (1/2)\ (0.971) = 0.4855$ per unit
S_{10} to bus 3, two circuits, each as for the S_6 to bus 1 calculation, $X_d'' = (1/2)\ (2.034) = 1.017$ per unit

The connection of an ac source, the voltage magnitude of which is the prefault voltage at the fault bus, between the dotted common connection and the fault at the fault bus causes the flow of per-unit alternating short-circuit current that is being calculated.

Copyright The Institute of Electrical and Electronics Engineers, Inc.
Provided by IHS under license with IEEE
No reproduction or networking permitted without license from IHS Not for Resale

The reactances of figure 4-16(a) are further simplified as shown in Fig 4-16(b), without losing track of the three fault locations. The reactance simplifications are summarized in table 4-9. The table contains columns of reactances and reciprocals. Arrows are used to indicate the calculation of a reciprocal. Sums of reciprocals are used to combine reactances in parallel. A dashed line in the reactance column indicates that reactances above the line have been combined in parallel.

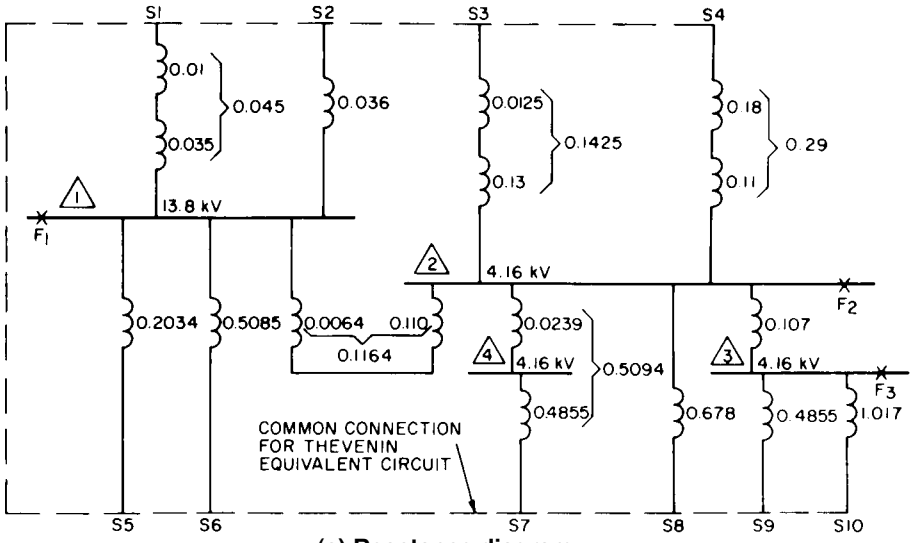

(a) Reactance diagram

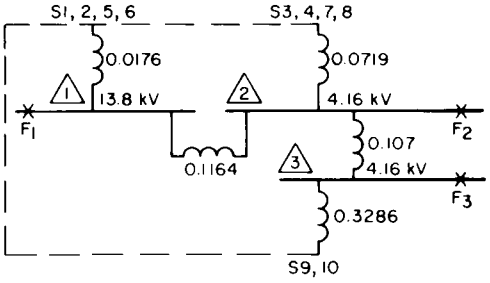

(b) Simplified reactance diagram

Figure 4-16—Circuits of power system reactances for calculation of first-cycle (momentary) short-circuit current duties for fuses and low-voltage circuit breakers

The final simplification of reactances to obtain one fault point *X* for each fault location is detailed in table 4-10. The results for the specified fault buses are the last entries in the reactance columns.

Copyright The Institute of Electrical and Electronics Engineers, Inc.
Provided by IHS under license with IEEE
No reproduction or networking permitted without license from IHS
Not for Resale

Table 4-9—Reactance combinations for figure 4-16(a)

S_1, S_2, S_5, S_6			S_3, S_4, S_7, S_8			S_9, S_{10}		
X		$1/X$	X		$1/X$	X		$1/X$
0.045	→	22.22	0.1425	→	7.02	0.4855	→	2.060
0.036	→	27.78	0.29	→	3.45	1.017	→	0.983
0.2034	→	4.91	0.5094	→	1.96	0.3286	←	3.043
0.5085	→	1.97	0.678	→	1.47			
0.0176	←	56.88	0.0719	←	13.90			

Table 4-10—Reactance combinations for fault-point X at each fault bus of figure 4-16(b)

Fault at F_1			Fault at F_2			Fault at F_3		
X		$1/X$	X		$1/X$	X		$1/X$
0.3286			0.0176			0.1340	→	7.46
0.107			0.1164			0.0719	→	13.90
0.4356	→	2.30	0.1340	→	7.46	0.0468	←	21.36
0.0719	→	13.90	0.107			0.107		
0.0617	←	16.20	0.3286			0.1538	→	6.502
0.1164			0.4356	→	2.30	0.3286	→	3.043
0.1781	→	5.62	0.0719	→	13.90	0.1048	←	9.545
0.0176	→	56.82	0.0423	←	23.66			
0.016	←	62.44						

Alternating short-circuit currents are calculated from the circuit reactance reductions X with a prefault voltage E of 1.0 per unit, and alternating rms current is, of course, E/X per unit. Multiplying by base current converts to real units. The resulting symmetrical (alternating only) first-cycle short-circuit rms currents are as follows:

at F_1, I_{sym} = (1.0/0.016) (0.4184) = 26.15 kA
at F_2, I_{sym} = (1.0/0.0423) (1.388) = 32.81 kA
at F_3, I_{sym} = (1.0/0.1048) (1.388) = 13.25 kA

Note that these currents may be useful as primary available symmetrical short-circuit current data for calculations of short-circuit duties at low-voltage buses of future unit substations connected to these medium-voltage buses.

Total (asymmetrical) rms short-circuit current duties for comparison with ac high-voltage (over 1000 V, including medium-voltage) circuit breaker closing and latching capabilities preferred before 1987 (or momentary ratings for the pre-1964 rating basis) are found using a

Copyright The Institute of Electrical and Electronics Engineers, Inc.
Provided by IHS under license with IEEE
No reproduction or networking permitted without license from IHS
Not for Resale

1.6 multiplying factor according to IEEE Std C37.010-1979 and IEEE Std C37.5-1979. These first-cycle short-circuit total (asymmetrical) rms currents are as follows:

at F_1, I_{tot} = 1.6 (26.15) = 41.8 kA
at F_2, I_{tot} = 1.6 (32.81) = 52.5 kA
at F_3, I_{tot} = 1.6 (13.25) = 21.2 kA

Crest short-circuit current duties for comparison with ac high-voltage (over 1000 V, including medium-voltage) circuit breaker closing and latching capabilities preferred in 1987 and after are found using a 2.7 multiplying factor according to IEEE Std C37.010-1979. These first-cycle short-circuit crest currents are as follows:

at F_1, I_{crest} = 2.7(26.15) = 70.6 kA
at F_2, I_{crest} = 2.7(32.81) = 88.6 kA
at F_3, I_{crest} = 2.7(13.25) = 35.8 kA

Asymmetrical short-circuit duties are necessary for comparison with total rms current ratings of ac high-voltage (and medium-voltage) fuses, such as those in the fused motor control equipment connected to buses 3 and 4. These are found using multiplying factors from IEEE Std C37.41-1981. The applicable standard for the circuit of figure 4-16 suggests a general case multiplying factor of 1.55, but a special case multiplier of 1.2 may be substituted if the voltage is less than 15 kV and if the *X*/*R* ratio is less than 4. The circuit of this example will not have *X*/*R* ratios as low as 4. The first-cycle short-circuit asymmetrical (total) rms currents for fuse applications are as follows:

at F_1, I_{tot} = 1.55(26.15) = 40.73 kA
at F_2, I_{tot} = 1.55(32.81) = 50.86 kA
at F_3, I_{tot} = 1.55(13.25) = 20.54 kA

4.6.11 Circuit and calculation of contact parting time (interrupting) short-circuit current duties for high-voltage circuit breakers

In addition to a circuit of power system reactances for calculating alternating currents (I_{pu} = *E*/*X*), a resistance-only circuit is needed to establish fault point *X*/*R* ratios. Duties are calculated by applying multiplying factors to *E*/*X*. The multiplying factors depend on the fault-point *X*/*R* and also on other factors defined subsequently.

The circuits used for calculating *X, E*/*X,* and fault point *R* are shown in figures 4-17(a) and 4-18(a), respectively. The rotating-machine reactances for the circuit of figure 4-17(a), if changed from subtransient, are shown in table 4-6. Table 4-11 details how these changes affect the table 4-8 simplifications of source circuits S_5 through S_{10}. Table 4-11 also includes resistance simplifications of source circuits for figure 4-18(a).

Figures 4-17(b) and 4-18(b) show the last steps of reactance and resistance simplifications, respectively, before the several fault location identities are lost. Tables 4-12 and 4-13 detail the reactance and resistance simplifications starting from figures 4-17(a) and 4-18(a), respectively. The final simplifications of reactances and resistances to obtain one fault point *X* and one fault point *R* for each fault location are detailed in tables 4-14 and 4-15, respectively.

Copyright The Institute of Electrical and Electronics Engineers, Inc.
Provided by IHS under license with IEEE
No reproduction or networking permitted without license from IHS
Not for Resale

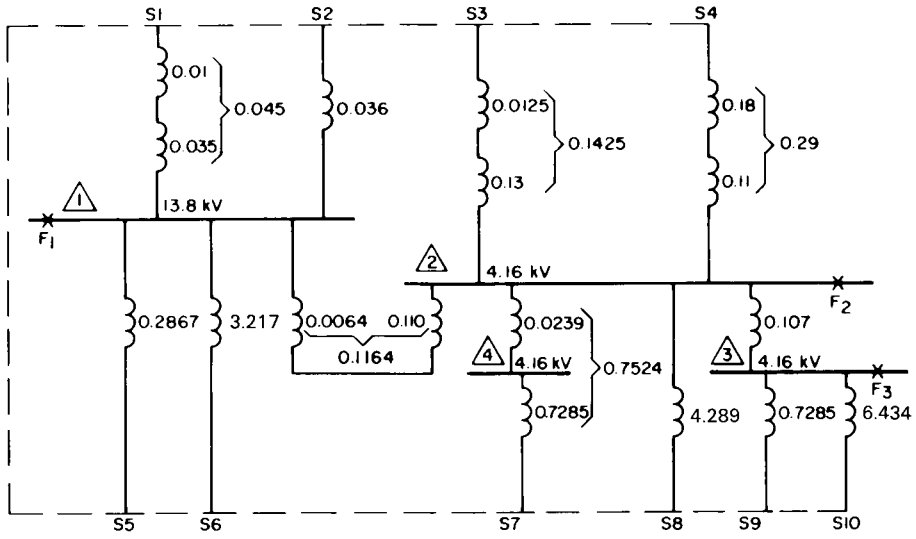

(a) Reactance diagram

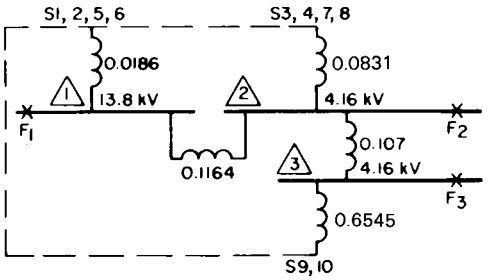

(b) Simplified reactance diagram

Figure 4-17—Circuits of power system reactances for calculation of E/X and fault-point X for contact-parting-time (interrupting) short-circuit current duties for high-voltage circuit breakers

Values of per-unit *E*/*X* for each fault bus are readily obtained from table 4-14 when $E = 1.0$ (as for this example); they are the final entries in the 1/*X* columns, opposite the fault point *X* entries. Values converted to actual currents are as follows:

at F_1, $E/X = 59.03(0.4184) = 24.70$ kA
at F_2, $E/X = 20.75(1.388) = 28.80$ kA
at F_3, $E/X = 7.841(1.388) = 10.88$ kA

Values of *X*/*R* for each fault bus are obtained from the fault point *X* and *R* entries of tables 4-14 and 4-15 as follows:

at F_1, $X/R = 0.0169/0.000537 = 31.47$
at F_2, $X/R = 0.0482/0.00348 = 13.85$
at F_3, $X/R = 0.1275/0.00488 = 26.13$

Copyright The Institute of Electrical and Electronics Engineers, Inc.
Provided by IHS under license with IEEE
No reproduction or networking permitted without license from IHS
Not for Resale

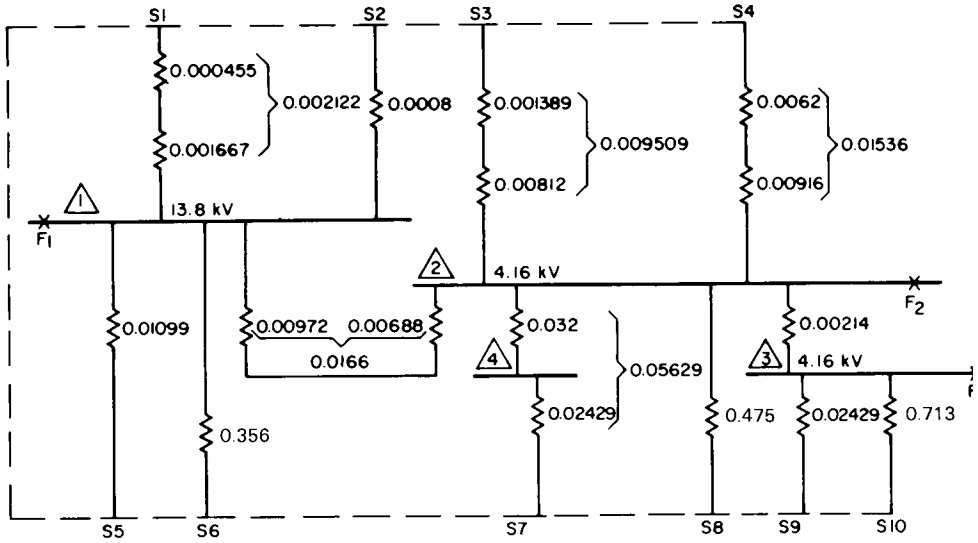

(a) Reactance diagram

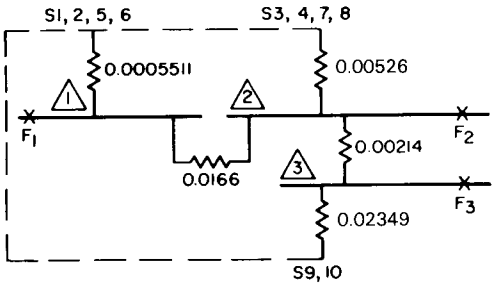

(b) Simplified reactance diagram

Figure 4-18—Circuits of power system resistance for calculation of fault-point R for contact-parting-time (interrupting) short-circuit current duties for high-voltage circuit breakers

The reference standards contain graphs of multiplying factors that determine calculated short-circuit current duties when applied to *E*/*X* values. The proper graph is selected with the following information:

a) Three-phase or single-phase short-circuit current (three-phase for this example)
b) Rating basis of the circuit breaker being applied (present symmetrical current short-circuit ratings or previous total current short-circuit ratings)
c) Rated interrupting time of the circuit breaker being applied
d) Fault point *X*/*R* ratio
e) Proximity of generators

Copyright The Institute of Electrical and Electronics Engineers, Inc.
Provided by IHS under license with IEEE
No reproduction or networking permitted without license from IHS
Not for Resale

Table 4-11—Reactances for figure 4-17(a) and resistances for figure 4-18(a)

S_5 to bus 1, two circuits in parallel, each with 1.5 X_d'' of synchronous Motor M_1 and transformer T_5, X = (1/2) (0.5 + 0.0734) = 0.2867 per unit R = (1/2) (0.016 67 + 0.005 31) = (1/2) (0.021 98) = 0.010 99 per unit
S_6 to bus 1, four circuits in parallel, motor group and transformer T_6, X = (1/4) (12.5 + 0.367) = (1/4) (12.867) = 3.217 per unit R = (1/4) (1.389 + 0.0367) = (1/4) (1.4257) = 0.356 per unit
S_7 to bus 4, two motors M_2, X = (1/2) (1.457) = 0.7285 per unit R = (1/2) (0.048 57) = 0.024 29 per unit
S_8 to bus 2, three circuits, each as for the S_6 to bus 1 calculation, X = (1/3) (12.867) = 4.289 per unit R = (1/3) (1.4257) = 0.475 per unit
S_9 to bus 3, two motors M_2, X = (1/2) (1.457) = 0.7285 per unit R = (1/2) (0.048 57) = 0.024 29 per unit
S_{10} to bus 3, two circuits, each as for the S_6 to bus 1 calculation, X = (1/2) (12.867) = 6.434 per unit R = (1/2) (1.4257) = 0.713 per unit

Table 4-12—Reactance combinations for figure 4-17(a)

S_1, S_2, S_5, S_6			S_3, S_4, S_7, S_8			S_9, S_{10}		
X		1/X	X		1/X	X		1/X
0.045	→	22.22	0.1425	→	7.018	0.7285	→	1.373
0.036	→	27.78	0.29	→	3.448	6.434	→	0.155
0.2867	→	3.49	0.7524	→	1.329	0.6545	←	1.528
3.217	→	0.31	4.289	→	0.233			
0.0186	←	53.80	0.0831	←	12.028			

Table 4-13—Resistance combinations for figure 4-18(a)

S_1, S_2, S_5, S_6			S_3, S_4, S_7, S_8			S_9, S_{10}		
R		1/R	R		1/R	R		1/R
0.002 122	→	471.3	0.009 509	→	105.2	0.024 29	→	41.17
0.000 8	→	1250.0	0.015 36	→	65.10	0.713	→	1.403
0.010 99	→	90.99	0.056 29	→	17.77	0.023 49	←	42.57
0.356	→	2.81	4.475	→	2.11			
0.000 551 1	←	1815	0.005 26	←	190.3			

Copyright The Institute of Electrical and Electronics Engineers, Inc.
Provided by IHS under license with IEEE
No reproduction or networking permitted without license from IHS Not for Resale

Table 4-14—Reactance combinations for fault-point X at each fault bus of figure 4-17(b)

Fault at F_1			Fault at F_2			Fault at F_3		
X		1/*X*	*X*		1/*X*	*X*		1/*X*
0.6545			0.0186			0.135	→	7.407
0.107			0.1164			0.0831	→	12.03
0.7615	→	1.313	0.135	→	7.407	0.0514	←	19.44
0.0831	→	12.03	0.7615	→	1.313	0.107		
0.0750	←	13.34	0.0831	→	12.03	0.1584	→	6.313
0.1164			0.0482	←	20.75	0.6545	→	1.528
0.1914	→	5.225				0.1275	←	7.841
0.0186	→	53.80						
0.0169	←	59.03						

Table 4-15—Reactance combinations for fault-point R at each fault bus of figure 4-18(b)

Fault at F_1			Fault at F_2			Fault at F_3		
R		1/*R*	*R*		1/*R*	*R*		1/*R*
0.023 49			0.000 551 1			0.017 15	→	58.31
0.002 14			0.016 6			0.005 26	→	190.3
0.025 63	→	39.02	0.017 15	→	58.31	0.004 02	←	248.6
0.005 26	→	190.3	0.005 26	→	190.3	0.002 14		
0.004 36	←	229.32	0.025 63	→	39.02	0.006 16	→	162.3
0.016 6			0.003 48	←	287.6	0.023 49	→	42.57
0.020 96	→	47.71				0.004 88	←	204.9
0.000 551 1	→	1815						
0.000 537	←	1863						

The proximity of generators determines the choice between graphs (a) for faults fed predominantly from generators through not more than one transformation or with external impedance in series that is less than 1.5 times generator X_d'' (local in this example) and (b) for faults fed predominantly through two or more transformers or with external impedance in series that is equal to or exceeds 1.5 times generator X_d'' (remote in this example). The local and remote multiplying factor graphs of IEEE Std C37.010-1979 and IEEE Std C37.5-1979 are given in figures 4-12 to 4-15. The local multiplying factors are smaller because they include the effects of generator ac (symmetrical current) decay. Remote multiplying factors are based

Copyright The Institute of Electrical and Electronics Engineers, Inc.
Provided by IHS under license with IEEE
No reproduction or networking permitted without license from IHS
Not for Resale

on no decay of the remote generator ac (symmetrical current) up to circuit breaker contact parting time. Utility contributions are considered to be from remote generators in most industrial system duty calculations.

For many systems having only remote sources and no in-plant generators, it is clear that the remote multiplying factor is the only choice. For the few systems that have in-plant generator primary power sources, both multiplying factors may be necessary, as explained subsequently.

In this example, short-circuit duties are calculated for (SYM) symmetrical current short-circuit rated (present basis) circuit breakers with 5-cycle rated interrupting times (SYM 5) and (TOT) total-current short-circuit rated (previous basis) circuit breakers with 8-cycle and 5-cycle rated interrupting times (TOT 8 and TOT 5).

Multiplying factors obtained from both the local and remote graphs of figures 4-12 to 4-15 are shown in table 4-16 for the other conditions previously established in this example.

Table 4-16—Three-phase short-circuit current multiplying factors for E/X for example conditions

Fault location	Fault-point *X*/*R* ratio	Circuit breaker type	Multiplying factor	
			Local	Remote
F_1	31.47	TOT 8 TOT 5 SYM 5	1.05 1.14 1.03	1.19 1.27 1.15
F_2	13.85	TOT 8 TOT 5 SYM 5	1.0* 1.01 1.0*	1.0* 1.06 1.0*
F_3	26.13	TOT 8 TOT 5 SYM 5	1.02 1.10 1.00	1.14 1.21 1.10

*IEEE Std C37.010-1979 and IEEE Std C37.5-1979 indicate that a 1.0 multiplying factor applies without further checking when $X/R = 15$ or less for SYM circuit breakers of all rated interrupting times and for TOT 8 circuit breakers.

In this example, with each of two main buses connected to both a utility (remote) source and an in-plant generator (local for nearby faults) source, it is not immediately apparent which multiplying factor applies. One technique that perhaps provides an extra margin of conservatism is to use only the larger remote multiplying factors as described in the next paragraphs. An alternative and also conservative procedure that interpolates between multiplying factors requires additional calculations (see 4.6.13).

Copyright The Institute of Electrical and Electronics Engineers, Inc.
Provided by IHS under license with IEEE
No reproduction or networking permitted without license from IHS Not for Resale

The calculated interrupting duty short-circuit rms currents for three-phase faults at bus 1, using remote multiplying factors, are as follows:

for SYM 5 circuit breakers, 1.15(24.70) = 28.41 kA-S
for TOT 8 circuit breakers, 1.19(24.70) = 29.39 kA-T
for TOT 5 circuit breakers, 1.27(24.70) = 31.37 kA-T

The kA-T designation denotes an rms current duty in kiloamperes to be compared with the total current short-circuit (interrupting) capability of a total-rated circuit breaker. This is a total (asymmetrical) rms current duty.

The kA-S designation denotes an rms current duty in kiloamperes to be compared with the symmetrical-current short-circuit (interrupting) capability of a symmetrical-rated circuit breaker. This is a symmetrical rms current duty only if the multiplying factor for E/X is 1.0; otherwise, it is neither symmetrical nor asymmetrical, but partway in between.

The F_2 fault calculation for a TOT 5 circuit breaker is not detailed in this example. SYM 5 and TOT 8 duties at bus 2 are already available, since 1.0 multiplying factors apply, as follows:

for SYM 5 circuit breakers, 1.0(28.80) = 28.80 kA-S
for TOT 8 circuit breakers, 1.0(28.80) = 28.80 kA-T

The calculated short-circuit (interrupting) duty rms currents for three-phase faults at bus 3, using remote multiplying factors, are as follows:

for SYM 5 circuit breakers, 1.10(10.88) = 11.97 kA-S
for TOT 8 circuit breakers, 1.14(10.88) = 12.40 kA-T
for TOT 5 circuit breakers, 1.21(10.88) = 13.16 kA-T

4.6.12 Circuit-breaker short-circuit capabilities compared with calculated remote multiplying-factor short-circuit current duties

Short-circuit ratings, or capabilities derived from them, for circuit breakers that might be applied in the example system are listed in table 4-17. The headings of the table also show in parentheses the type of calculated short-circuit duties to be compared with listed equipment capabilities or ratings. The capabilities derived from symmetrical short-circuit ratings using a ratio of rated maximum voltage to operating voltage are computed using the example operating voltages listed in the table.

Circuit breakers for bus 1 application, both SYM 5 and TOT 8 types, having short-circuit ratings or capabilities equal to or greater than the corresponding calculated duties at bus 1, are listed in table 4-18 with the calculated duties for comparison. Circuit breakers for bus 2 and 3 applications are listed in tables 4-19 and 4-20, respectively, with short-circuit ratings or capabilities and calculated duties.

Copyright The Institute of Electrical and Electronics Engineers, Inc.
Provided by IHS under license with IEEE
No reproduction or networking permitted without license from IHS
Not for Resale

Table 4-17—AC high-voltage circuit-breaker short-circuit ratings or capabilities, in kiloamperes

		TOT 8 8-cycle total-rated circuit breakers		SYM 5 5-cycle symmetrical-rated circuit breakers		
Circuit breaker nominal size identification	Example maximum system operating voltage (kV)	Momentary rating (first-cycle total rms current)	Interrupting rating (total rms current at 4-cycle contact-parting time)	Closing and latching capability before 1987 (first-cycle total rms current)	Closing and latching capability 1987 and after (first-cycle crest current)	Short-circuit capability (symmetrical rms current at 3-cycle contact-parting time)
4.16–75	4.16	20	10.5	19	32	10.1
4.16–250	4.16	60	35	58	97	33.2
4.16–350	4.16	80	48.6	78	132	46.9
13.8–500	13.8	40	21	37	62	19.6
13.8–750	13.8	60	31.5	58	97	30.4
13.8–1000	13.8	80	42	77	130	40.2

4.6.13 Contact parting time (interrupting) duties for high-voltage circuit breakers using weighted interpolation between multiplying factors

For a system with several sources, including in-plant generators that might be classified local or remote depending on fault location, logical calculations make use of both remote and local multiplying factors in a weighting process. The weighting consists of applying the remote multiplying factor to the part of the *E*/*X* symmetrical short-circuit current contributed by remote sources and the local multiplying factor to the remainder of *E*/*X*. The application of either a local or a remote multiplying factor to the motor contribution part of *E*/*X* is permitted by IEEE Std C37.010-1979 (5.4.1, note 5 of the table). The remote sources' part of *E*/*X* includes the contribution of an in-plant generator if it is less than 0.4 times the generator current to a short circuit at its terminals; any larger generator current corresponds to a reactance in series that is less than 1.5 times generator X_d'' and supports the use of a local multiplier for the generator contribution, according to IEEE Std C37.010-1979 and IEEE Std C37.5-1979.

Additional calculations are necessary to find the short-circuit currents contributed by each utility and in-plant generator source to the short-circuit duties being investigated. The magni-

Copyright The Institute of Electrical and Electronics Engineers, Inc.
Provided by IHS under license with IEEE
No reproduction or networking permitted without license from IHS Not for Resale

Table 4-18—Calculated bus 1 short-circuit duties compared with ratings or capabilities of ac high-voltage circuit breakers

Type of circuit breaker	TOT 8 (8-cycle total rated)	SYM 5 (5-cycle symmetrical rated)
First-cycle duty, before 1987, total rms current	41.8 kA	41.8 kA
First-cycle duty, 1987 and after, crest current		70.6 kA
Short-circuit (interrupting) duty, rms current	29.4 kA-T	28.4 kA-S
Circuit breaker nominal size	13.8–750	13.8–750
Momentary rms current rating, or closing and latching rms capability, before 1987	60 kA	58 kA
Closing and latching crest capability, 1987 and after		97 kA
Interrupting rating, or short-circuit current capability	31.5 kA	30.4 kA

Table 4-19—Calculated bus 2 short-circuit duties compared with ratings or capabilities of ac high-voltage circuit breakers

Type of circuit breaker	TOT 8 (8-cycle total rated)	SYM 5 (5-cycle symmetrical rated)
First-cycle duty, before 1987, total rms current	52.5 kA	52.5 kA
First-cycle duty, 1987 and after, crest current		88.6 kA
Short-circuit (interrupting) duty, rms current	28.8 kA-T	28.8 kA-S
Circuit breaker nominal size	4.16–250	4.16–250
Momentary rms current rating, or closing and latching rms capability, before 1987	60 kA	58 kA
Closing and latching crest capability, 1987 and after		97 kA
Interrupting rating, or short-circuit current capability	35 kA	33.2 kA

Copyright The Institute of Electrical and Electronics Engineers, Inc.
Provided by IHS under license with IEEE
No reproduction or networking permitted without license from IHS
Not for Resale

Table 4-20—Calculated bus 3 short-circuit duties compared with ratings or capabilities of ac high-voltage circuit breakers

Type of circuit breaker	TOT 8 (8-cycle total rated)	SYM 5 (5-cycle symmetrical rated)
First-cycle duty, before 1987, total rms current	21.2 kA	21.2 kA
First-cycle duty, 1987 and after, crest current		35.8 kA
Short-circuit (interrupting) duty, rms current	12.4 kA-T	12.0 kA-S
Circuit breaker nominal size	4.16–250	4.16–250
Momentary rms current rating, or closing and latching rms capability, before 1987	60 kA	58 kA
Closing and latching crest capability, 1987 and after		97 kA
Interrupting rating, or short-circuit current capability	35 kA	33.2 kA

tude of an in-plant generator contribution for each short circuit determines whether it is included with utility sources in the remote part of *E/X*.

The additional calculation of currents in the source branches of the equivalent circuit during a short circuit at a specified location is a multistep process not illustrated here (and greatly facilitated by available computer programs). The results of the necessary calculations for this example are given in table 4-21. Also shown are remote or local classifications for the in-plant generators contributing to short circuits at F_1, F_2, and F_3.

The weighted interpolation has significance only for the short circuit at F_1. For the short circuit at F_2, the local and remote multiplying factors are both 1.0 (for SYM 5 and TOT 8 duties) and interpolation has no effect. For the short circuit at F_3, since all sources including in-plant generators are classified as remote, the remote multiplying factor applies.

For the short circuit at F_1, the remote part of $E/X = 22.22 + 2.75 + 1.35 = 26.32$ per unit, and the remainder of $E/X = 59.03 - 26.32 = 32.71$ per unit. The calculated short-circuit interrupting-duty rms currents for three-phase short circuits at bus 1 (F_1), using weighted interpolation of multiplying factors, are as follows:

for SYM 5 circuit breakers, 1.15 (26.32) + 1.03 (32.71) = 64.0 per unit or 64.0 (0.4184) = 26.8 kA-S

for TOT 8 circuit breakers, 1.19 (26.32) + 1.05 (32.71) = 65.67 per unit or 65.67 (0.4184) = 27.5 kA-T

Copyright The Institute of Electrical and Electronics Engineers, Inc.
Provided by IHS under license with IEEE
No reproduction or networking permitted without license from IHS Not for Resale

Table 4-21—Current contributions of separate sources (generators) to E/X symmetrical short-circuit (interrupting) duties, with sources classified remote or local (currents are in per unit on the 10 MVA base of this example)

Fault contributions and classifications*	Fault at F_1	Fault at F_2	Fault at F_3
Fault point *E*/*X* symmetrical short-circuit current	59.03	20.75	7.84
S_1–69 kV utility contribution Classification	22.22 remote	3.06 remote	0.99 remote
S_2–25 MVA generator contribution Classification†	27.78 local	3.83 remote	1.24 remote
S_3–48 kV utility contribution Classification	2.75 remote	7.02 remote	2.28 remote
S_4–5 MVA generator contribution Classification‡	1.35 remote	3.45 local	1.12 remote

*Utility is always remote, in-plant generator is remote if contribution is less than 0.4 E/X″
†*E*/*X*″ (for three-phase short circuit at terminals) = 27.78 per unit
‡*E*/*X*″ (for three-phase short circuit at terminals) = 5.56 per unit

Comparison of these results with previously calculated bus 1 results, table 4-18, shows that the previous use of only remote multiplying factors gives an extra margin of conservatism of 6 or 7% in this example.

4.6.14 Circuit and calculation of approximately 30-cycle minimum short-circuit currents

The circuit used is shown in figure 4-19. The rotating-machine reactances are shown in table 4-7. Table 4-22 details the reactance simplifications starting from figure 4-19(b).

A prefault voltage of 1.0 per unit is assumed, *I* is calculated at *E*/*X* per unit, and the conversion is made to real units. There is no dc component remaining to cause asymmetry. The resulting, symmetrical, approximately 30-cycle, short-circuit currents are as follows:

at F_1, I = (1.0/0.0413) (0.4184) = 10.14 kA
at F_2, I = (1.0/0.1133) (1.388) = 12.25 kA
at F_3, I = (1.0/0.2203) (1.388) = 6.30 kA

Copyright The Institute of Electrical and Electronics Engineers, Inc.
Provided by IHS under license with IEEE
No reproduction or networking permitted without license from IHS
Not for Resale

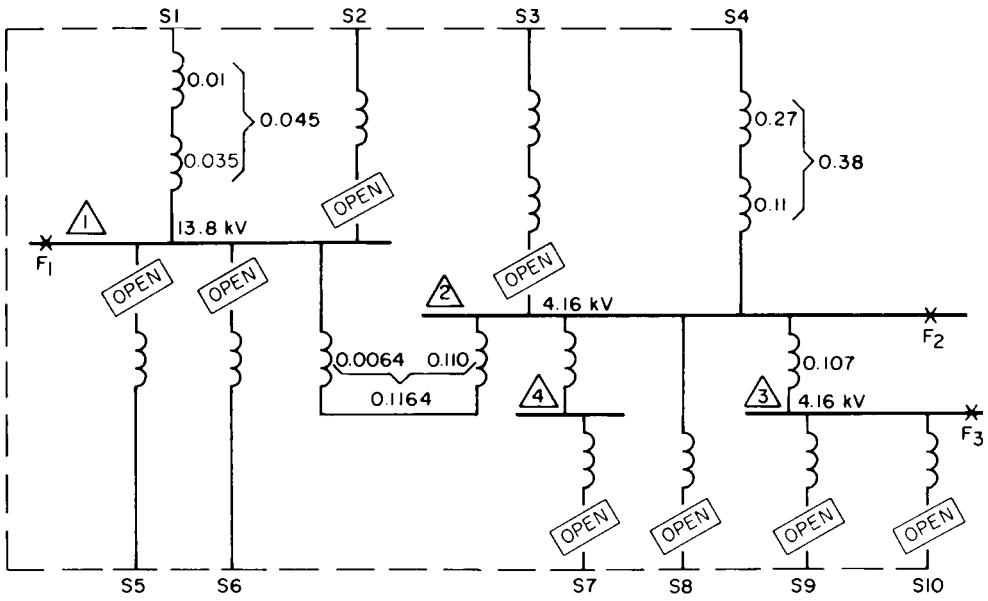

(a) Reactance diagram

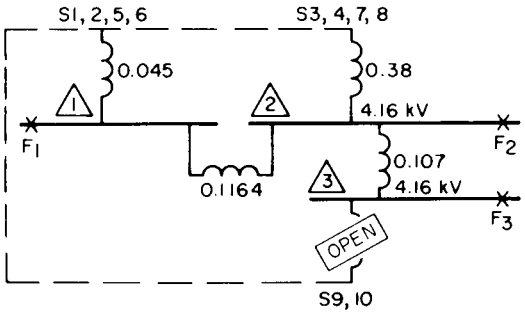

(b) Simplified reactance diagram

Figure 4-19—Circuits of power system reactances for calculation of approximately 30-cycle minimum short-circuit currents

4.7 Example of short-circuit current calculation for a low-voltage system (under 1000 V)

As in portions of a power system with voltage over 1000 V, calculation of short-circuit currents at various locations in a low-voltage system (voltage under 1000 V) is essential for proper application of circuit breakers, fuses, buses, and cables. All should withstand the thermal and magnetic stresses imposed by the maximum possible short-circuit currents until the currents are interrupted. In addition, circuit breakers and fuses should safely interrupt these maximum short-circuit currents.

Copyright The Institute of Electrical and Electronics Engineers, Inc.
Provided by IHS under license with IEEE
No reproduction or networking permitted without license from IHS Not for Resale

Table 4-22—Reactance combinations for fault-point X at each fault bus of figure 4-19(b)

Fault at F_1			Fault at F_2			Fault at F_3
X		1/*X*	*X*		1/*X*	*X*
0.38			0.045			0.1133
0.1164			0.1164			0.107
———			———			———
0.4964	→	2.0145	0.1614	→	6.1958	0.2203
0.045	→	22.2222	0.38	→	2.6316	
– – – –		———	– – – –		———	
0.041 26	←	24.2367	0.1133	←	8.8274	

For the three-phase system, the three-phase short circuit will usually produce the maximum fault current. On a balanced three-phase system, the line-to-line fault current will never exceed 87% of the three-phase value. With a system neutral solidly grounded, the line-to-ground fault current could exceed the three-phase short-circuit current by a small percentage; however, this is apt to occur only when there is little or no motor load and the primary system fault contribution is small.

The calculation of symmetrical short-circuit current duties is normally sufficient for the application of circuit breakers and fuses under 1000 V because they have published symmetrical-current-interrupting ratings. The ratings are based on the first-cycle symmetrical rms current, calculated using results at 1/2 cycle after short-circuit-current inception, and incorporate an asymmetrical capability as necessary for a circuit *X*/*R* ratio of 6.6 or less (short-circuit power factor of 15% or greater). A typical system served by a transformer rated 1000 or 1500 kVA will usually have a short-circuit *X*/*R* ratio within these limits. For larger or multi-transformer systems, it is advisable to check the *X*/*R* ratio; if it is greater than 6.6, the circuit breaker or fuse application should be based on asymmetrical current limitations (see IEEE Std C37.13-1990).

The low-voltage short-circuit current calculation procedure differs very little from that used for finding first-cycle short-circuit duties in higher voltage systems. All connected motor ratings are included as fault contributing sources, and this contribution is based on the subtransient reactance of the machines. The contribution from the primary system should be equivalent to that calculated for its first-cycle short-circuit duty. Due to the quantity and small ratings of motors usually encountered in low-voltage systems, it is customary to use an assumed typical value for their equivalent reactance in the low-voltage short-circuit network. This typical reactance value is 25% (0.25 per unit) based on the individual motor rating or the total rating of a group of motors, both in kilovoltamperes (see 4.5.4).

The example fault calculation presented here is for a 480 V three-phase system, illustrated by the single line diagram of figure 4-20. The system data shown are typical of those required to perform the calculations.

Copyright The Institute of Electrical and Electronics Engineers, Inc.
Provided by IHS under license with IEEE
No reproduction or networking permitted without license from IHS Not for Resale

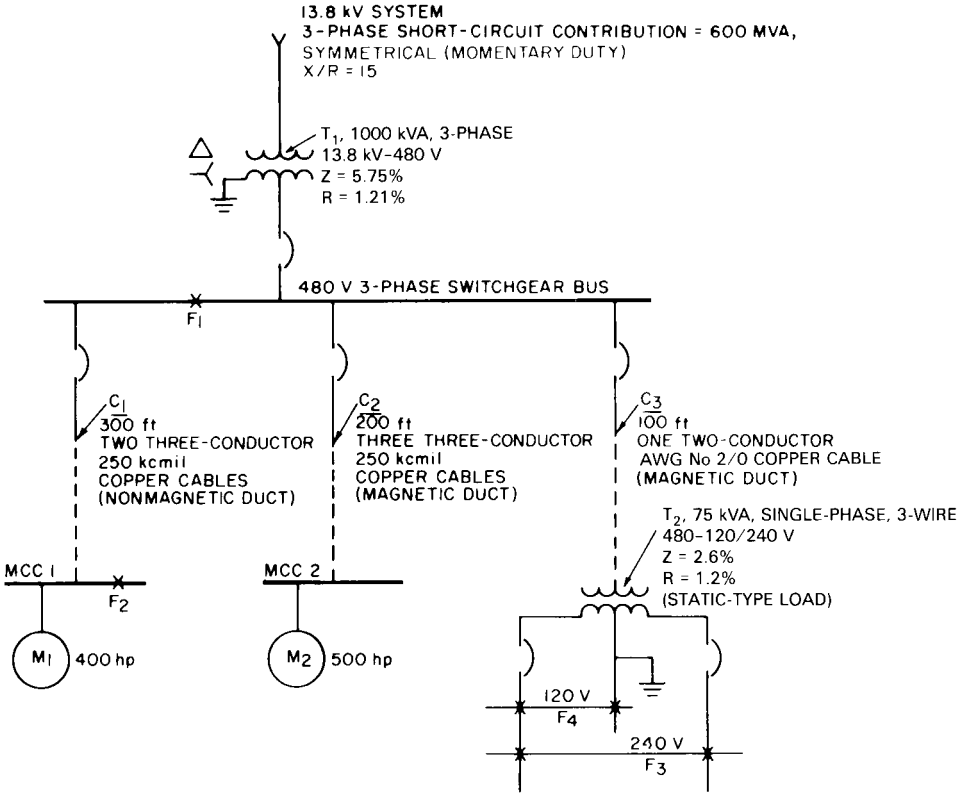

NOTE: The motor horsepower indicated at MCC 1 and 2 represents a lumped total of small induction three-phase machines ranging in size from 10–150 hp.

Figure 4-20—Low-voltage system

Bolted three-phase short circuits F_1 and F_2 are assumed at each of the bus locations, and zero impedance (bolted) line-to-line short circuits F_3 and F_4 are assumed at the 120/240 V single-phase locations. Both resistance and reactance components of the circuit element impedances are used in order to illustrate a more precise procedure and to obtain *X*/*R* ratios.

Resistances are usually significant in low-voltage short-circuit current calculations. Their effect may be evaluated either by a complex impedance reduction or by separate *X* and *R* reductions. The complex reduction leads to the most accurate short-circuit-current magnitude results (but probably nonconservative *X*/*R* ratios). The separate *X* and *R* reductions are simpler, conservative, and have the added benefit that they give the best approximation for the *X*/*R* ratio at the fault point. They are illustrated by this example:

Copyright The Institute of Electrical and Electronics Engineers, Inc.
Provided by IHS under license with IEEE
No reproduction or networking permitted without license from IHS
Not for Resale

4.7.1 Step 1: Convert all element impedances to per-unit values on a common base

The assumed base power is 1000 kVA and the base voltage is E_b = 480 V:

$$\text{base current } I_b = \frac{\text{kVA (1000)}}{\sqrt{3} \cdot E_b}$$

$$= \frac{1000 \cdot 1000}{\sqrt{3} \cdot 480}$$

$$= 1202.8 \text{ A}$$

$$\text{base impedance } Z_b = \frac{E_b / \sqrt{3}}{I_b}$$

$$= \frac{480 / \sqrt{3}}{1202.8} = 0.2304\ \Omega$$

a) *13.8 kV source impedance*. The short-circuit-current contribution from the 13.8 kV system will usually be expressed as a symmetrical rms current (in kA) or apparent power (in MVA), giving a specific *X*/*R* ratio. This three-phase short-circuit duty should be the maximum possible available at the primary terminals of the transformer and equivalent to the first-cycle symmetrical short-circuit duty. For this example, the 13.8 kV available short-circuit duty is 600 MVA or 25 102 A symmetrical rms at an *X*/*R* ratio of 15. The equivalent R_s and X_s impedance Z_s can be obtained as follows:

$$Z_s = \frac{\text{base kVA}}{\text{short-circuit kVA}} = \frac{1000}{600\,000} = 0.00166 \text{ per unit}$$

Since $Z_s = \sqrt{(R_s)^2 + (X_s)^2}$ and $X_s/R_s = 15$, the value of $R_s = Z_s / \sqrt{1 + (15)^2} =$ 0.00011 per unit, and the value of $X_s = 15 \cdot R_s = 0.00165$ per unit.

b) *1000 kVA transformer impedance*. The transformer manufacturer provides the information that the impedance is 5.75% on the self-cooled base rating of 1000 kVA, and the resistance is 1.21% (R_{T1}). Reactance $X = \sqrt{Z^2 - R^2}$ = 5.62% (X_{T1}). The performance values are as follows:

$$R_{T1} = \frac{\text{base kVA}}{\text{transformer kVA}} \cdot \frac{\%R_{T1}}{100} = \frac{1000}{1000} \cdot \frac{1.21}{100} = 0.0121 \text{ per unit}$$

$$X_{T1} = \frac{\text{base kVA}}{\text{transformer kVA}} \cdot \frac{\%X_{T1}}{100} = \frac{1000}{1000} \cdot \frac{5.62}{100} = 0.0562 \text{ per unit}$$

Copyright The Institute of Electrical and Electronics Engineers, Inc.
Provided by IHS under license with IEEE
No reproduction or networking permitted without license from IHS Not for Resale

c) *Cable* C_1 (300 ft of two 250 kcmil three-conductor copper cables in nonmagnetic duct). From published tables, the ac resistance R_{C1} is 0.0541 Ω per conductor per 1000 ft, and the reactance X_{C1} is 0.0330 Ω per conductor per 1000 ft.

For 300 ft of two paralleled conductors,

$$R_{C1} = \frac{0.0541 \cdot 300}{2 \cdot 1000} = 0.00812\ \Omega$$

$$X_{C1} = \frac{0.0330 \cdot 300}{2 \cdot 1000} = 0.00495\ \Omega$$

Converting impedances to per unit,

$$R_{C1} = \frac{\text{actual ohms}}{\text{base ohms}} = \frac{0.00812}{0.2304} = 0.0352 \text{ per unit}$$

$$X_{C1} = \frac{\text{actual ohms}}{\text{base ohms}} = \frac{0.00495}{0.2304} = 0.0215 \text{ per unit}$$

d) *Cable* C_2 (200 ft of three 250 kcmil three-conductor copper cables in magnetic duct). From published tables, the ac resistance R_{C2} is 0.0552 Ω per conductor per 1000 ft, and the reactance X_{C2} is 0.0379 Ω per conductor per 1000 ft.

For 200 ft of three parallel conductors,

$$R_{C2} = \frac{0.0552 \cdot 200}{3 \cdot 1000} = 0.00368\ \Omega$$

$$X_{C2} = \frac{0.0379 \cdot 200}{3 \cdot 1000} \cdot 0.00253\ \Omega$$

Converting impedances to per unit,

$$R_{C2} = \frac{0.00368}{0.2304} = 0.01597 \text{ per unit}$$

$$X_{C2} = \frac{0.00253}{0.2304} = 0.01098 \text{ per unit}$$

e) *Cable* C_3 (100 ft of one AWG No. 2/0 two-conductor copper cable in magnetic duct). From published tables, the ac resistance R_{C3} is 0.102 Ω/1000 ft, and the reactance X_{C3} is 0.0407 Ω/1000 ft.

Copyright The Institute of Electrical and Electronics Engineers, Inc.
Provided by IHS under license with IEEE
No reproduction or networking permitted without license from IHS Not for Resale

For 100 ft,

$$R_{C3} = \frac{0.102 \cdot 100}{1000} = 0.0102\ \Omega$$

$$X_{C3} = \frac{0.0407 \cdot 100}{1000} = 0.00407\Omega$$

Converting impedances to per unit,

$$R_{C3} = \frac{0.0102}{0.2304} = 0.0443 \text{ per unit}$$

$$X_{C3} = \frac{0.00407}{0.2304} = 0.01766 \text{ per unit}$$

f) *Motor contribution*. The running motor loads at motor control center 1 and 2 buses total 400 hp and 500 hp, respectively. Typical assumptions made for 480 V small motor groups are that 1 hp = 1 kVA, and the average subtransient reactance is 25%. The resistance is 4.167%, based on a typical *X*/*R* ratio of 6.

Converting impedances to per unit on the 1000 kVA base,

$$R_{M1} = \frac{\text{base kVA} \cdot \%R_{M1}}{\text{motor kVA} \cdot 100} = \frac{1000 \cdot 4.167}{400 \cdot 100} = 0.1042 \text{ per unit}$$

$$X_{M1} = \frac{\text{base kVA} \cdot \%X_{M1}}{\text{motor kVA} \cdot 100} = \frac{1000 \cdot 25}{400 \cdot 100} = 0.625 \text{ per unit}$$

$$R_{M2} = \frac{1000 \cdot 4.167}{500 \cdot 100} = 0.0833 \text{ per unit}$$

$$X_{M2} = \frac{1000 \cdot 25}{500 \cdot 100} = 0.500 \text{ per unit}$$

4.7.2 Step 2: Draw separate resistance and reactance diagrams applicable for fault locations F_1 and F_2 (figures 4-21 and 4-22)

Since the single-phase 120/240 V system has no short-circuit current contributing sources, it will not be represented in these diagrams.

Copyright The Institute of Electrical and Electronics Engineers, Inc.
Provided by IHS under license with IEEE
No reproduction or networking permitted without license from IHS
Not for Resale

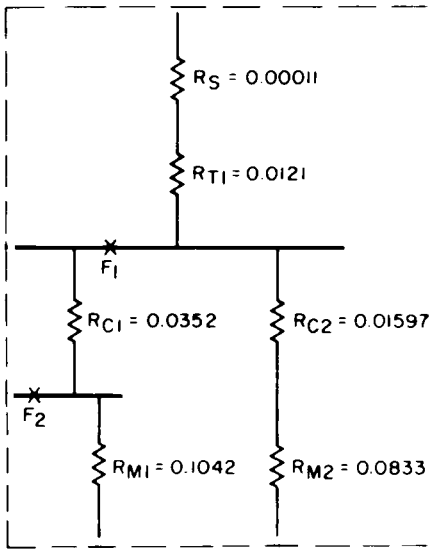

Figure 4-21—Resistance network for faults at F_1 and F_2

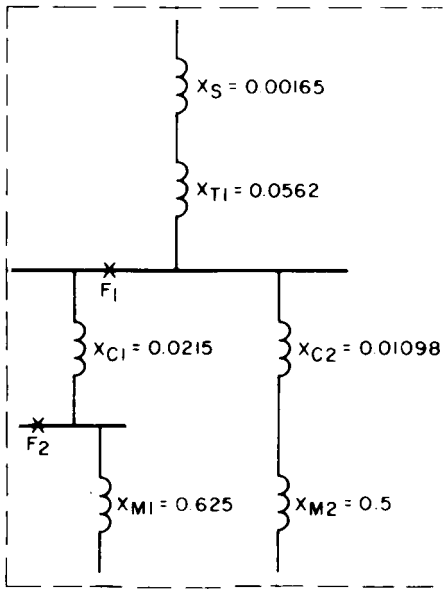

Figure 4-22—Reactance network for faults at F_1 and F_2

Copyright The Institute of Electrical and Electronics Engineers, Inc.
Provided by IHS under license with IEEE
No reproduction or networking permitted without license from IHS
Not for Resale

4.7.3 Step 3: For each fault location reduce R and X networks to per-unit values and calculate fault current

The reduction of the *R* and *X* networks at short-circuit location F_1 is shown in figures 4-23 and 4-24. The short-circuit current at F_1 is then calculated as follows:

The total impedance *Z* is

$$Z = \sqrt{R^2 + X^2} = \sqrt{(0.010\,09)^2 + (.048\,11)^2} = 0.049\,16 \text{ per unit}$$

The total three-phase symmetrical short-circuit current at F_1 is *(E/Z)* · base current; that is,

$$\frac{\text{base amperes}}{\text{per-unit } Z} = \frac{1202.8}{0.049\,16} = 24\,470 \text{ A}$$

and the *X*/*R* ratio of the system impedance for the short circuit at F_1 is

$$X/R = \frac{0.048\,11}{0.010\,09} = 4.77$$

The reduction of the *R* and *X* networks at short-circuit location F_2 is shown in figures 4-25 and 4-26. The short-circuit current at F_2 is then calculated as follows:

The total impedance Z is

$$Z = \sqrt{R_2 + X_2} = \sqrt{(0.0319)^2 + (0.0657)^2} = 0.073 \text{ per unit}$$

The total three-phase symmetrical short-circuit current at F_2 is

$$\frac{\text{base amperes}}{\text{per-unit } Z} = \frac{1202.8}{0.073} = 16\,480 \text{ A}$$

and the *X*/*R* ratio of the system impedance for the short circuit at F_2 is

$$X/R = \frac{0.0657}{0.0319} = 2.06$$

Copyright The Institute of Electrical and Electronics Engineers, Inc.
Provided by IHS under license with IEEE
No reproduction or networking permitted without license from IHS
Not for Resale

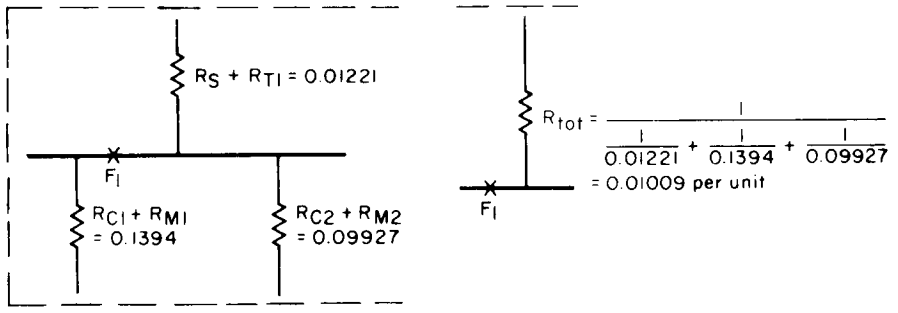

Figure 4-23—Reduction of R network for fault at F_1

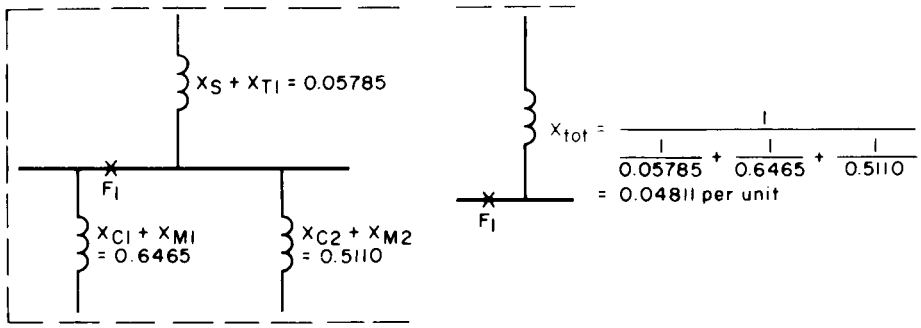

Figure 4-24—Reduction of X network for fault at F_1

4.7.4 Step 4: Draw separate resistance and reactance diagrams applicable for short circuits at the 120/240 V single-phase secondary of the 75 kVA transformer, and calculate fault currents

Per-unit calculations of short-circuit currents at the low-voltage side of a single-phase transformer connected line-to-line to a three-phase system may continue to use the same base, in this example 1000 kVA, but as a single-phase base. Impedances in the primary system connected to the transformer have double the values used for three-phase calculations to account for both outgoing and return paths of single-phase primary currents. This procedure assumes that the positive and negative sequence impedances are equal.

The total system three-phase short-circuit point impedance, as calculated above for a short circuit at F_1, consists of $R_s = 0.0101$ per unit and $X_s = 0.0481$ per unit. Since these are line-to-neutral values, they are doubled to obtain the line-to-line equivalents. Thus R_s becomes 0.0202 per unit and X_s becomes 0.0962 per unit.

Copyright The Institute of Electrical and Electronics Engineers, Inc.
Provided by IHS under license with IEEE
No reproduction or networking permitted without license from IHS Not for Resale

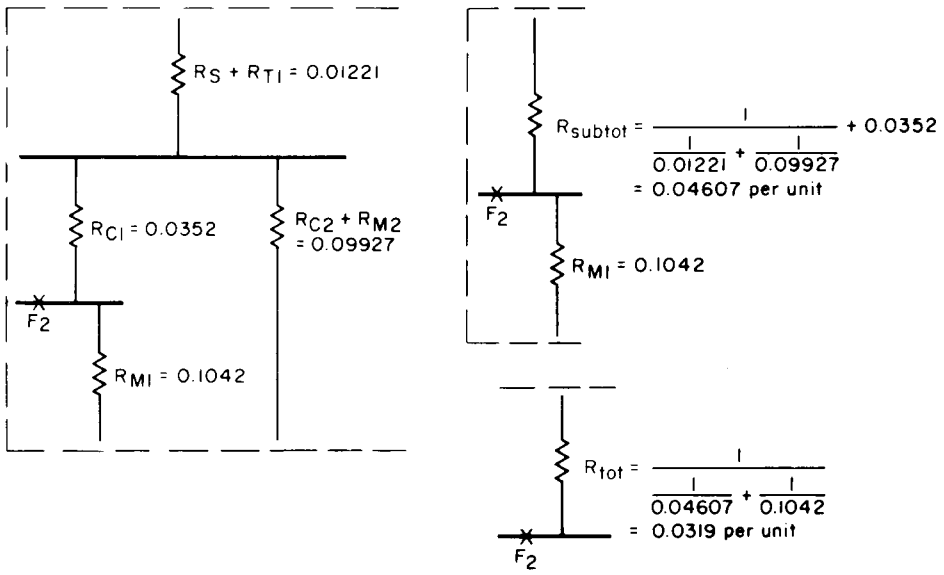

Figure 4-25—Reduction of R network for fault at F_2

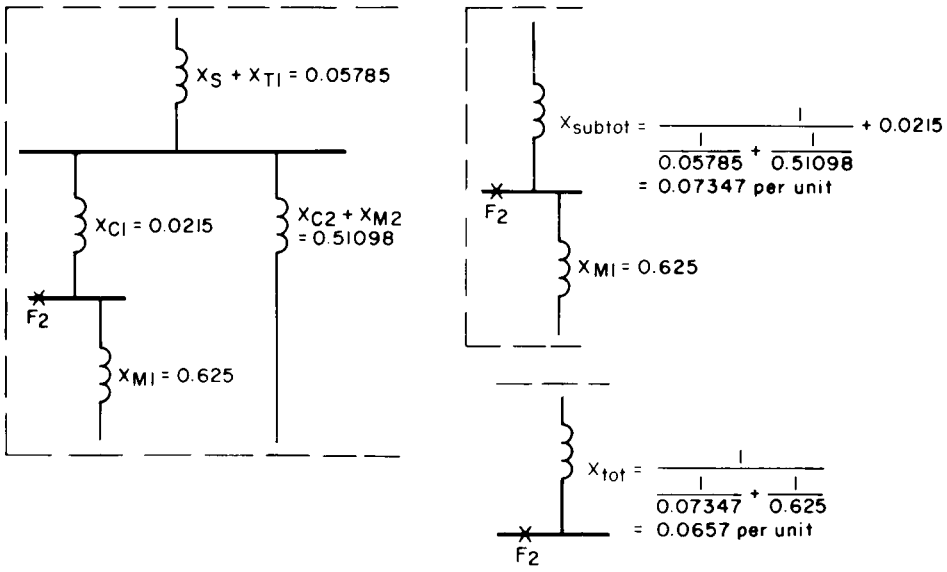

Figure 4-26—Reduction of X network for fault at F_2

Copyright The Institute of Electrical and Electronics Engineers, Inc.
Provided by IHS under license with IEEE
No reproduction or networking permitted without license from IHS
Not for Resale

The single-phase cable circuit C_3 was determined to have a per-unit line-to-neutral resistance R_{C3} equal to 0.0443 and a per-unit line-to-neutral reactance X_{C3} of 0.017 66. These values must also be doubled for the line-to-line short-circuit calculation, and become 0.0886 and 0.0353 per unit, respectively.

The 75 kVA transformer impedance, from a manufacturer's published tables, is 2.6% on the base rating of 75 kVA, including the full secondary winding. The impedance components are 1.2% resistance R_{T2} and 2.3% reactance X_{T2}.

The per-unit values on the common 1000 kVA base are as follows:

$$R_{T2} = \frac{\text{base kVA}}{\text{transformer kVA}} \cdot \frac{\%R_{T2}}{100} = \frac{1000}{75} \cdot \frac{1.2}{100} = 0.16 \text{ per unit}$$

$$X_{T2} = \frac{\text{base kVA}}{\text{transformer kVA}} \cdot \frac{\%X_{T2}}{100} = \frac{1000}{75} \cdot \frac{2.3}{100} = 0.3067 \text{ per unit}$$

For a line-to-line short circuit at F_3 across the 240 V secondary winding of the 75 kVA transformer, the applicable resistance and reactance diagrams are shown in figures 4-27 and 4-28. The total impedance Z is

$$Z = \sqrt{(0.2688)^2 + (0.4382)^2} = 0.5141 \text{ per unit}$$

the total short-circuit apparent power (in kVA) is

$$\frac{\text{base kVA}}{\text{per-unit } Z} = \frac{1000}{0.5141} = 1945 \text{ kVA}$$

and the total symmetrical rms short-circuit current is

$$\frac{\text{kVA (1000)}}{E_{L\text{-}L}} = \frac{1945 \cdot 1000}{240} = 8104 \text{ A}$$

For a line-to-line short circuit across the 120 V secondary of the 75 kVA transformer, the transformer resistance and reactance values are modified to compensate for the half winding effect. On the same 75 kVA base rating, impedances of one 120 V winding are obtained from those of the 240 V winding using a resistance multiplier of approximately 1.5 and a reactance multiplier of approximately 1.2. These multipliers are typical for a single-phase distribution class transformer. However, for greater accuracy, the transformer manufacturer should be consulted.

Copyright The Institute of Electrical and Electronics Engineers, Inc.
Provided by IHS under license with IEEE
No reproduction or networking permitted without license from IHS Not for Resale

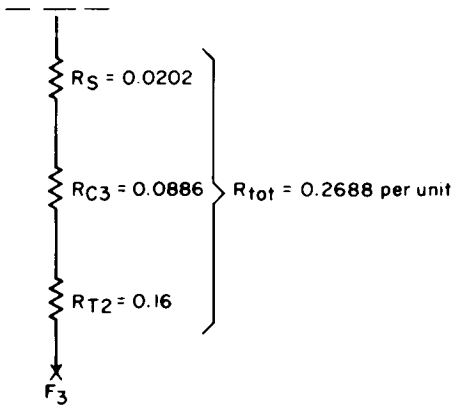

Figure 4-27—Resistance network for fault at F_3

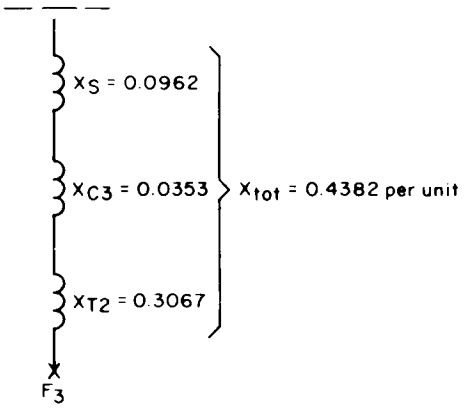

Figure 4-28—Reactance network for fault at F_3

For a short circuit at F_4 the resistance and reactance diagrams are shown in figures 4-29 and 4-30. The total impedance Z is

$$Z = \sqrt{(0.3488)^2 + (0.4995)^2} = 0.6092 \text{ per unit}$$

the total short-circuit apparent power (in kVA) is

$$\frac{\text{base kVA}}{\text{per-unit } Z} = \frac{1000}{0.6092} = 1642 \text{ kVA}$$

and the total symmetrical rms short-circuit current is

$$\frac{\text{kVA (1000)}}{E_{\text{L-L}}} = \frac{1642 \cdot 1000}{120} = 13\,683 \text{ A}$$

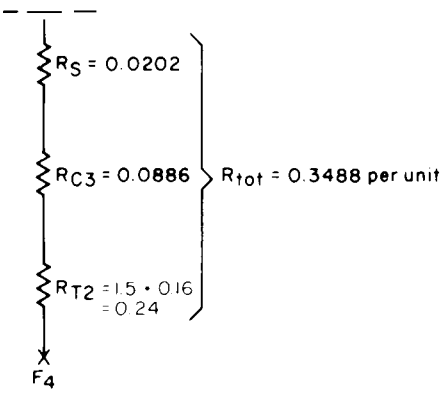

Figure 4-29—Resistance network for fault at F_4

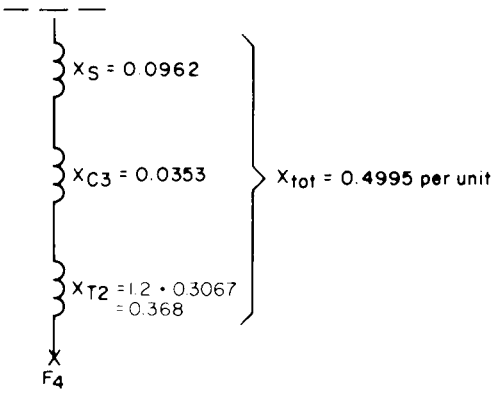

Figure 4-30—Reactance network for fault at F_4

Copyright The Institute of Electrical and Electronics Engineers, Inc.
Provided by IHS under license with IEEE
No reproduction or networking permitted without license from IHS
Not for Resale

4.8 Calculation of short-circuit currents for dc systems

The calculation of dc short-circuit currents is essential in the design and application of distribution and protective apparatus used in dc systems. A knowledge of mechanical stresses imposed by these fault currents is also important in the installation of cables, buses, and their supports.

As in the application of ac protective devices, the magnitude of the available dc short-circuit current is the prime consideration. Since high-speed or semi-high-speed dc protective devices can interrupt the flow of fault current before the maximum value is reached, it is necessary to consider the rate of rise of the fault current, along with the interruption time, in order to determine the maximum current that will actually be obtained. Lower speed protective devices will generally permit the maximum value to be reached before interruption.

The sources of dc short-circuit currents are the following:

a) Generators
b) Synchronous converters
c) Motors
d) Electronic rectifiers
e) Semiconductor rectifiers
f) Batteries
g) Electrolytic cells

Simplified procedures for the calculation of dc short-circuit currents are not well established; therefore, this chapter can only provide reference to publications containing helpful information (see ANSI C97.1-1972, IEEE Std C37.5-1979, IEEE Std C37.41-1988, NEMA AB 1-1975, and NEMA SG 3-1981).

4.9 References

This standard shall be used in conjunction with the following publications:

ANSI C84.1-1989, American National Standard Electric Power Systems and Equipment—Voltage Ratings (60 Hz).[2]

ANSI C97.1-1972, American National Standard for Low-Voltage Cartridge Fuses 600 Volts or Less.

IEEE Std C37.010-1979, IEEE Application Guide for AC High-Voltage Circuit Breakers Rated on a Symmetrical Current Basis (ANSI).[3]

[2]ANSI publications are available from the Sales Department, American National Standards Institute, 11 West 42nd Street, 13th Floor, New York, NY 10036, USA.

[3]IEEE publications are available from the Institute of Electrical and Electronics Engineers, Service Center, 445 Hoes Lane, P.O. Box 1331, Piscataway, NJ 08855-1331, USA.

Copyright The Institute of Electrical and Electronics Engineers, Inc.
Provided by IHS under license with IEEE
No reproduction or networking permitted without license from IHS Not for Resale

IEEE Std C37.5-1979, IEEE Guide for Calculation of Fault Currents for Application of AC High-Voltage Circuit Breakers Rated on a Total Current Basis (ANSI).[4]

IEEE Std C37.13-1990, IEEE Standard for Low-Voltage AC Power Circuit Breakers Used in Enclosures (ANSI).

IEEE Std C37.41-1988, IEEE Standard Design Tests for High-Voltage Fuses, Distribution Enclosed Single-Pole Air Switches, Fuse Disconnecting Switches, and Accessories (ANSI).

NEMA AB 1-1975, Molded-Case Circuit Breakers.[5]

NEMA SG 3-1981, Low-Voltage Power Circuit Breakers.

4.10 Bibliography

[B1] AIEE Committee Report, "Protection of Electronic Power Converters." *AIEE Transactions*, vol. 69, pp. 813–829, 1950.

[B2] Beeman, D. L., Ed., *Industrial Power Systems Handbook*. New York: McGraw-Hill, 1955, chapter 2.

[B3] Crites, W. R., and Darling, A. G., "Short-Circuit Calculating Procedure for DC Systems with Motors and Generators." *AIEE Transactions (Power Apparatus and Systems)*, pt. III, vol. 73, pp. 816–825, Aug. 1954.

[B4] Dortort, I. K., "Equivalent Machine Constants for Rectifiers." *AIEE Transactions (Communications and Electronics)*, pt. I, vol. 72, pp. 435–438, Sept. 1953.

[B5] Dortort, I. K., "Extended Regulation Curves for Six-Phase Double-Way and Double-Wye Rectifiers." *AIEE Transactions (Communications and Electronics)*, pt. I, vol. 72, pp. 192–202, May 1953.

[B6] *Electrical Transmission and Distribution Reference Book*. East Pittsburgh, PA: Westinghouse Electric Corporation, 1964.

[B7] Greenwood, A., "Basic Transient Analysis for Industrial Power Systems," Conference Record, 1972 IEEE Industrial and Commercial Power Systems and Electric Space Heating Joint Technical Conference, IEEE 72CHO600-7-IA, pp. 13-20.

[B8] Herskind, C. C., Schmidt, A., Jr., and Rettig, C. E., "Rectifier Fault Currents—II," *AIEE Transactions*, vol. 68, pp. 243–252, 1949.

[4]IEEE Std C37.5-1979 has been withdrawn and is out of print; however, copies can be obtained from the IEEE Standards Department, IEEE Service Center, 445 Hoes Lane, P.O. Box 1331, Piscataway, NJ 08855-1331, USA.

[5]NEMA publications can be obtained from the National Electrical Manufacturers Association, 2101 L Street, NW, Washington, DC 20037, USA.

Copyright The Institute of Electrical and Electronics Engineers, Inc.
Provided by IHS under license with IEEE
No reproduction or networking permitted without license from IHS Not for Resale

[B9] Huening, W. C., Jr., Interpretation of New American National Standards for Power Circuit Breaker Applications. *IEEE Transactions on Industry and General Applications*, vol. IGA-5, no. 5, Sept./Oct. 1969.

[B10] Reed, M. B., *Alternating Current Circuit Theory*, 2nd edition. New York: Harper and Brothers, 1956.

[B11] St. Pierre, C. R., *Time-Sharing Computer Programs (DATUMS) for Power System Data Reduction*. Schenectady, NY: General Electric Company, 1973.

[B12] Stevenson, W. D., Jr., *Elements of Power System Analysis*. New York: McGraw-Hill, 1982.

[B13] Wagner, C. F., and Evans, R. D., *Symmetrical Components*. New York: McGraw-Hill, 1933.

Copyright The Institute of Electrical and Electronics Engineers, Inc.
Provided by IHS under license with IEEE
No reproduction or networking permitted without license from IHS Not for Resale

Annex 4A
Typical impedance data for short-circuit studies

(informative)

The following tables and figures appear in this annex:

Table 4A-1, Typical reactance values for induction and synchronous machines, in per-unit of machine kVA ratings

Table 4A-2, Representative conductor spacings for overhead lines

Table 4A-3, Constants of copper conductors for 1 ft symmetrical spacing

Table 4A-4, Constants of aluminum cable, steel reinforced (ACSR), for 1 ft symmetrical spacing

Table 4A-5, 60 Hz reactance spacing factor X_B, in ohms per conductor per 1000 ft

Table 4A-6, 60 Hz reactance spacing factor X_B, in ohms per conductor per 1000 ft

Table 4A-7, 60 Hz impedance data for three-phase copper cable circuits, in approximate ohms per 1000 ft at 75 °C (nonshielded varnished cambric/shielded neoprene insulated cables)

Table 4A-8, 60 Hz impedance data for three-phase aluminum cable circuits, in approximate ohms per 1000 ft at 90 °C (cross-linked polyethylene insulated cable)

Figure 4A-1, *X*/*R* ratio of transformers

Figure 4A-2, *X*/*R* range for small generators and synchronous motors (solid rotor and salient pole)

Figure 4A-3, *X*/*R* range for three-phase induction motors

The following tables appear in other chapters:

Table 10-15, BILs and percent impedance voltages at self-cooled (0A) rating for liquid-immersed transformers (Chapter 10)

Table 10-16, BILs and percent impedance voltage for dry-type transformers (Chapter 10)

Table 13-2, Voltage-drop values of three-phase, sandwiched busways with copper bus bars, in V/100 ft, line-to-line, at rated current with concentrated load (Chapter 13)

Table 13-3, Voltage-drop values of three-phase, sandwiched busways with aluminum bus bars, in V/100 ft, line-to-line, at rated current with concentrated load (Chapter 13)

Copyright The Institute of Electrical and Electronics Engineers, Inc.
Provided by IHS under license with IEEE
No reproduction or networking permitted without license from IHS
Not for Resale

Table 4A-1—Typical reactance values for induction and synchronous machines, in per unit of machine kVA ratings*

	X_d''	X_d'
Turbine generators†		
2 poles	0.09	0.15
4 poles	0.15	0.23
Salient-pole generators with damper windings†		
12 poles or less	0.16	0.33
14 poles or less	0.21	0.33
Synchronous motors		
6 poles	0.15	0.23
8–14 poles	0.20	0.30
16 poles or more	0.28	0.40
Synchronous condensers†	0.24	0.37
Synchronous converters†		
600 V direct current	0.20	—
250 V direct current	0.33	—
Individual large induction motors, usually above 600 V	0.17	—
Smaller motors, usually 600 V and below	See tables 4-1 and 4-2.	

NOTE—Approximate synchronous motor kVA bases can be found from motor horsepower ratings as follows:
0.8 power factor motor—kVA base = hp rating
1.0 power factor motor—kVA base = 0.8 · hp rating

*Use manufacturer's specified values if available.
†X_d' not normally used in short-circuit calculations.

Copyright The Institute of Electrical and Electronics Engineers, Inc.
Provided by IHS under license with IEEE
No reproduction or networking permitted without license from IHS Not for Resale

Table 4A-2—Representative conductor spacings for overhead lines

Nominal system voltage (volts)	Equivalent delta spacing (inches)
120	12
240	12
480	18
600	18
2400	30
4160	30
6900	36
13 800	42
23 000	48
34 500	54
69 000	96
115 000	204

NOTE—When the cross section indicates conductors are arranged at points of a triangle with spacings *A*, *B*, and *C* between pairs of conductors, the following formula may be used:

$$\text{equivalent delta spacing} = \sqrt[3]{A \cdot B \cdot C}$$

When the conductors are located in one place and the outside conductors are equally spaced at distance *A* from the middle conductors, the equivalent is 1.26 times the distance *A*:

$$\text{equivalent delta spacing} = \sqrt[3]{A \cdot A \cdot 2A} = 1.26A$$

Copyright The Institute of Electrical and Electronics Engineers, Inc.
Provided by IHS under license with IEEE
No reproduction or networking permitted without license from IHS
Not for Resale

Table 4A-3—Constants of copper conductors for 1 ft symmetrical spacing*

Size of conductor		Resistance R at 50 °C, 60 Hz	Reactance X_A at 1 ft spacing, 60 Hz
(cmil)	(AWG No.)	(Ω/conductor/1000 ft)	(Ω/conductor/1000 ft)
1 000 000		0.0130	0.0758
900 000		0.142	0.0769
800 000		0.0159	0.0782
750 000		0.0168	0.0790
700 000		0.0179	0.0800
600 000		0.0206	0.0818
500 000		0.0246	0.0839
450 000		0.0273	0.0854
400 000		0.0307	0.0867
350 000		0.0348	0.0883
300 000		0.0407	0.0902
250 000		0.0487	0.0922
211 600	4/0	0.0574	0.0953
167 800	3/0	0.0724	0.0981
133 100	2/0	0.0911	0.101
105 500	1/0	0.115	0.103
83 690	1	0.145	0.106
66 370	2	0.181	0.108
52 630	3	0.227	0.111
41 740	4	0.288	0.113
33 100	5	0.362	0.116
26 250	6	0.453	0.121
20 800	7	0.570	0.123
16 510	8	0.720	0.126

NOTE—For a three-phase circuit the total impedance, line to neutral, is $Z = R + j\,(X_A + X_B)$.

*Use spacing factors of X_B of tables 4A-5 and 4A-6 for other spacings.

Copyright The Institute of Electrical and Electronics Engineers, Inc.
Provided by IHS under license with IEEE
No reproduction or networking permitted without license from IHS
Not for Resale

Table 4A-4—Constants of aluminum cable, steel reinforced (ACSR), for 1 ft symmetrical spacing*

Size of conductor		Resistance R at 50 °C, 60 Hz	Reactance X_A at 1 ft spacing, 60 Hz
(cmil)	(AWG No.)	(Ω/conductor/1000 ft)	(Ω/conductor/1000 ft)
1 590 000		0.0129	0.0679
1 431 000		0.0144	0.0692
1 272 000		0.0161	0.0704
1 192 500		0.0171	0.0712
1 113 000		0.0183	0.0719
954 000		0.0213	0.0738
795 000		0.0243	0.0744
715 500		0.0273	0.0756
636 000		0.0307	0.0768
556 500		0.0352	0.0786
477 000		0.0371	0.0802
397 500		0.0445	0.0824
336 400		0.0526	0.0843
266 800		0.0662	0.0945
	4/0	0.0835	0.1099
	3/0	0.1052	0.1175
	2/0	0.1330	0.1212
	1/0	0.1674	0.1242
	1	0.2120	0.1259
	2	0.2670	0.1215
	3	0.3370	0.1251
	4	0.4240	0.1240
	5	0.5340	0.1259
	6	0.6740	0.1273

NOTE—For a three-phase circuit the total impedance, line to neutral, is $Z = R + j\,(X_A + X_B)$.

*Use spacing factors of X_B from tables 4A-5 and 4A-6 for other spacings.

--`,,`-`-`,,`,,`,`,,`---
Copyright The Institute of Electrical and Electronics Engineers, Inc.
Provided by IHS under license with IEEE
No reproduction or networking permitted without license from IHS
Not for Resale

Copyright The Institute of Electrical and Electronics Engineers, Inc.
Provided by IHS under license with IEEE
No reproduction or networking permitted without license from IHS

Table 4A-5—60 Hz reactance spacing factor X_B, in ohms per conductor per 1000 ft

	Separation (inches)											
(ft)	**0**	**1**	**2**	**3**	**4**	**5**	**6**	**7**	**8**	**9**	**10**	**11**
0	—	–0.0571	–0.0412	–0.0319	–0.0252	–0.0201	–0.0159	–0.0124	–0.0093	–0.0066	–0.0042	–0.0020
1	—	0.0018	0.0035	0.0051	0.0061	0.0080	0.0093	0.0106	0.0117	0.0129	0.0139	0.0149
2	0.0159	0.0169	0.0178	0.0186	0.0195	0.0203	0.0211	0.0218	0.0255	0.0232	0.0239	0.0246
3	0.0252	0.0259	0.0265	0.0271	0.0277	0.0282	0.0288	0.0293	0.0299	0.0304	0.0309	0.0314
4	0.0319	0.0323	0.0328	0.0333	0.0337	0.0341	0.0346	0.0350	0.0354	0.0358	0.0362	0.0366
5	0.0370	0.0374	0.0377	0.0381	0.0385	0.0388	0.0392	0.0395	0.0399	0.0402	0.0405	0.0409
6	0.0412	0.0415	0.0418	0.0421	0.0424	0.0427	0.0430	0.0433	0.0436	0.0439	0.0442	0.0445
7	0.0447	0.0450	0.0453	0.0455	0.0458	0.0460	0.0463	0.0466	0.0468	0.0471	0.0473	0.0476
8	0.0478											

Not for Resale

Table 4A-6—60 Hz reactance spacing factor X_B, in ohms per conductor per 1000 ft

Separation (quarter inches)				
(inches)	**0**	**1/4**	**2/4**	**3/4**
0	—	—	–0.072 9	–0.063 6
1	–0.0571	–0.051 9	–0.047 7	–0.044 3
2	–0.0412	–0.038 4	–0.035 9	–0.033 9
3	–0.0319	–0.030 1	–0.028 2	–0.026 7
4	–0.0252	–0.023 8	–0.022 5	–0.021 2
5	–0.0201	–0.017 95	–0.017 95	–0.016 84
6	–0.0159	–0.014 94	–0.013 99	–0.013 23
7	–0.0124	–0.011 52	–0.010 78	–0.010 02
8	–0.0093	–0.008 52	–0.007 94	–0.007 19
9	–0.0066	–0.006 05	–0.005 29	–0.004 74
10	–0.0042	—	—	—
11	–0.0020	—	—	—
12	—	—	—	—

Copyright The Institute of Electrical and Electronics Engineers, Inc.
Provided by IHS under license with IEEE
No reproduction or networking permitted without license from IHS
Not for Resale

Copyright The Institute of Electrical and Electronics Engineers, Inc.
Provided by IHS under license with IEEE
No reproduction or networking permitted without license from IHS
Not for Resale

Table 4A-7—60 Hz impedance data for three-phase copper cable circuits, in approximate ohms per 1000 ft at 75 °C*

(a) Three single conductors

AWG or kcmil	In magnetic duct						In nonmagnetic duct					
	600 V and 5 kV nonshielded			5 kV shielded and 15 kV			600 V and 5 kV nonshielded			5 kV shielded and 15 kV		
	R	*X*	*Z*	*R*	*X*	*Z*	*R*	*X*	*Z*	*R*	*X*	*Z*
8	0.811	0.0754	0.814	0.811	0.0860	0.816	0.811	0.0603	0.813	0.811	0.0688	0.814
8 (solid)	0.786	0.0754	0.790	0.786	0.0860	0.791	0.786	0.0603	0.788	0.786	0.0688	0.789
6	0.510	0.0685	0.515	0.510	0.0796	0.516	0.510	0.0548	0.513	0.510	0.0636	0.514
6 (solid)	0.496	0.0685	0.501	0.496	0.0796	0.502	0.496	0.0548	0.499	0.496	0.0636	0.500
4	0.321	0.0632	0.327	0.321	0.0742	0.329	0.321	0.0506	0.325	0.321	0.0594	0.326
4 (solid)	0.312	0.0632	0.318	0.312	0.0742	0.321	0.312	0.0506	0.316	0.312	0.0594	0.318
2	0.202	0.0585	0.210	0.202	0.0685	0.214	0.202	0.0467	0.207	0.202	0.0547	0.209
1	0.160	0.0570	0.170	0.160	0.0675	0.174	0.160	0.0456	0.166	0.160	0.0540	0.169
1/0	0.128	0.0540	0.139	0.128	0.0635	0.143	0.127	0.0432	0.134	0.128	0.0507	0.138
2/0	0.102	0.0533	0.115	0.103	0.0630	0.121	0.101	0.0426	0.110	0.102	0.0504	0.114
3/0	0.0805	0.0519	0.0958	0.0814	0.0605	0.101	0.0766	0.0415	0.0871	0.0805	0.0484	0.0939
4/0	0.0640	0.0497	0.0810	0.0650	0.0583	0.0929	0.0633	0.0398	0.0748	0.0640	0.0466	0.0792
250	0.0552	0.0495	0.0742	0.0557	0.570	0.0797	0.0541	0.0396	0.0670	0.0547	0.0456	0.0712
300	0.0464	0.0493	0.0677	0.0473	0.0564	0.0736	0.0451	0.0394	0.0599	0.0460	0.0451	0.0644
350	0.0378	0.0491	0.0617	0.0386	0.0562	0.0681	0.0368	0.0393	0.0536	0.0375	0.0450	0.0586
400	0.0356	0.0490	0.0606	0.0362	0.0548	0.0657	0.0342	0.0392	0.0520	0.0348	0.0438	0.0559
450	0.0322	0.0480	0.0578	0.0328	0.0538	0.0630	0.0304	0.0384	0.0490	0.0312	0.0430	0.0531
500	0.0294	0.0466	0.0551	0.0300	0.0526	0.0505	0.0276	0.0373	0.0464	0.0284	0.0421	0.0508
600	0.0257	0.0463	0.0530	0.0264	0.0516	0.0580	0.0237	0.0371	0.0440	0.0246	0.0412	0.0479
750	0.0216	0.0445	0.0495	0.0223	0.0497	0.0545	0.0194	0.0356	0.0405	0.0203	0.0396	0.0445

NOTE—Resistance based on tinned copper at 60 Hz; 600 V and 5 kV nonshielded cable based on varnished cambric insulation; 5 kV shielded and 15 kV cable based on neoprene insulation.

*Resistance values (R_L) at lower copper temperatures (T_L) are obtained by using the formula $R_L = \frac{R_{75}(234.5 + T_L)}{309.5}$.

Copyright The Institute of Electrical and Electronics Engineers, Inc.
Provided by IHS under license with IEEE
No reproduction or networking permitted without license from IHS
Not for Resale

Table 4A-7—60 Hz impedance data for three-phase copper cable circuits, in approximate ohms per 1000 ft at 75 °C*

(b) Three-conductor cable

	In magnetic duct and steel interlocked armor						In nonmagnetic duct and aluminum interlocked armor					
AWG or kcmil	**600 V and 5 kV nonshielded**			**5 kV shielded and 15 kV**			**600 V and 5 kV nonshielded**			**5 kV shielded and 15 kV**		
	R	***X***	***Z***	***R***	***X***	***Z***	***R***	***X***	***Z***	***R***	***X***	***Z***
8	0.811	0.0577	0.813	0.811	0.0658	0.814	0.811	0.0503	0.812	0.811	0.0574	0.813
8 (solid)	0.786	0.0577	0.788	0.786	0.0658	0.789	0.786	0.0503	0.787	0.786	0.0574	0.788
6	0.510	0.0525	0.513	0.510	0.0610	0.514	0.510	0.0457	0.512	0.510	0.0531	0.513
6 (solid)	0.496	0.0525	0.499	0.496	0.0610	0.500	0.496	0.0457	0.498	0.496	0.0531	0.499
4	0.321	0.0483	0.325	0.321	0.0568	0.326	0.321	0.0422	0.324	0.321	0.0495	0.325
4 (solid)	0.312	0.0483	0.316	0.312	0.0508	0.317	0.312	0.0422	0.315	0.312	0.0495	0.316
2	0.202	0.0448	0.207	0.202	0.0524	0.209	0.202	0.0390	0.206	0.202	0.0457	0.207
1	0.160	0.0436	0.166	0.160	0.0516	0.168	0.160	0.0380	0.164	0.160	0.0450	0.166
1/0	0.128	0.0414	0.135	0.128	0.0486	0.137	0.127	0.0360	0.132	0.128	0.0423	0.135
2/0	0.102	0.0407	0.110	0.103	0.0482	0.114	0.101	0.0355	0.107	0.102	0.0420	0.110
3/0	0.0805	0.0397	0.0898	0.0814	0.0463	0.0936	0.0766	0.0346	0.0841	0.0805	0.0403	0.090
4/0	0.0640	0.0381	0.0745	0.0650	0.0446	0.0788	0.0633	0.0332	0.0715	0.0640	0.0389	0.0749
250	0.0552	0.0379	0.0670	0.0557	0.0436	0.0707	0.0541	0.0330	0.0634	0.0547	0.0380	0.0666
300	0.0464	0.0377	0.0598	0.0473	0.0431	0.0640	0.0451	0.0329	0.0559	0.0460	0.0376	0.0596
350	0.0378	0.0373	0.0539	0.0386	0.0427	0.0576	0.0368	0.0328	0.0492	0.0375	0.0375	0.0530
400	0.0356	0.0371	0.0514	0.0362	0.0415	0.0551	0.0342	0.0327	0.0475	0.0348	0.0366	0.0505
450	0.0322	0.0361	0.0484	0.0328	0.0404	0.0520	0.0304	0.0320	0.0441	0.0312	0.0359	0.0476
500	0.0294	0.0349	0.0456	0.0300	0.0394	0.0495	0.0276	0.0311	0.0416	0.0284	0.0351	0.0453
600	0.0257	0.0343	0.0429	0.0264	0.0382	0.0464	0.0237	0.0309	0.0389	0.0246	0.0344	0.0422
750	0.0216	0.0326	0.0391	0.0223	0.0364	0.0427	0.0197	0.0297	0.0355	0.0203	0.0332	0.0389

NOTE—Resistance based on tinned copper at 60 Hz; 600 V and 5 kV nonshielded cable based on varnished cambric insulation; 5 kV shielded and 15 kV cable based on neoprene insulation.

*Resistance values (R_L) at lower copper temperatures (T_L) are obtained by using the formula $R_L = \frac{R_{75}(234.5 + T_L)}{309.5}$.

Copyright The Institute of Electrical and Electronics Engineers, Inc.
Provided by IHS under license with IEEE
No reproduction or networking permitted without license from IHS

Table 4A-8—60 Hz impedance data for three-phase aluminum cable circuits, in approximate ohms per 1000 ft at 90 °C*

(a) Three single conductors

AWG or kcmil	In magnetic duct						In nonmagnetic duct					
	600 V and 5 kV nonshielded			5 kV shielded and 15 kV			600 V and 5 kV nonshielded			5 kV shielded and 15 kV		
	R	*X*	*Z*	*R*	*X*	*Z*	*R*	*X*	*Z*	*R*	*X*	*Z*
6	0.847	0.053	0.849	—	—	—	0.847	0.042	0.848	—	—	—
4	0.532	0.050	0.534	0.532	0.068	0.536	0.532	0.040	0.534	0.532	0.054	0.535
2	0.335	0.046	0.338	0.335	0.063	0.341	0.335	0.037	0.337	0.335	0.050	0.339
1	0.265	0.048	0.269	0.265	0.059	0.271	0.265	0.035	0.267	0.265	0.047	0.269
1/0	0.210	0.043	0.214	0.210	0.056	0.217	0.210	0.034	0.213	0.210	0.045	0.215
2/0	0.167	0.041	0.172	0.167	0.055	0.176	0.167	0.033	0.170	0.167	0.044	0.173
3/0	0.133	0.040	0.139	0.132	0.053	0.142	0.133	0.037	0.137	0.132	0.042	0.139
4/0	0.106	0.039	0.113	0.105	0.051	0.117	0.105	0.031	0.109	0.105	0.041	0.113
250	0.0896	0.0384	0.0975	0.0892	0.0495	0.102	0.0894	0.0307	0.0945	0.0891	0.0396	0.0975
300	0.0750	0.0375	0.0839	0.0746	0.0479	0.0887	0.0746	0.0300	0.0804	0.0744	0.0383	0.0837
350	0.0644	0.0369	0.0742	0.0640	0.0468	0.0793	0.0640	0.0245	0.0705	0.0638	0.0374	0.0740
400	0.0568	0.0364	0.0675	0.0563	0.0459	0.0726	0.0563	0.0291	0.0634	0.0560	0.0367	0.0700
500	0.0459	0.0355	0.0580	0.0453	0.0444	0.0634	0.0453	0.0284	0.0535	0.0450	0.0355	0.0573
600	0.0388	0.0359	0.0529	0.0381	0.0431	0.0575	0.0381	0.0287	0.0477	0.0377	0.0345	0.0511
700	0.0338	0.0350	0.0487	0.0332	0.0423	0.0538	0.0330	0.0280	0.0433	0.0326	0.0338	0.0470
750	0.0318	0.0341	0.0466	0.0310	0.0419	0.0521	0.0309	0.0273	0.0412	0.0304	0.0335	0.0452
1000	0.0252	0.0341	0.0424	0.0243	0.0414	0.0480	0.0239	0.0273	0.0363	0.0234	0.0331	0.0405

NOTE—Cross-linked polyethylene insulated cable.

*Resistance values (R_L) at lower aluminum temperatures (T_L) are obtained by using the formula $R_L = \frac{R_{90}(228.1 + T_L)}{318.1}$.

Not for Resale

Copyright The Institute of Electrical and Electronics Engineers, Inc.
Provided by IHS under license with IEEE
No reproduction or networking permitted without license from IHS
Not for Resale

Table 4A-8—60 Hz impedance data for three-phase aluminum cable circuits, in approximate ohms per 1000 ft at 90 °C*
(b) Three-conductor cable

AWG or kcmil	In magnetic duct						In nonmagnetic duct					
	600 V and 5 kV nonshielded			5 kV shielded and 15 kV			600 V and 5 kV nonshielded			5 kV shielded and 15 kV		
	R	*X*	*Z*	*R*	*X*	*Z*	*R*	*X*	*Z*	*R*	*X*	*Z*
6	0.847	0.053	0.849	—	—	—	0.847	0.042	0.848	—	—	—
4	0.532	0.050	0.534	—	—	—	0.532	0.040	0.534	—	—	—
2	0.335	0.046	0.338	0.335	0.056	0.340	0.335	0.037	0.337	0.335	0.045	0.338
1	0.265	0.048	0.269	0.265	0.053	0.270	0.265	0.035	0.267	0.265	0.042	0.268
1/0	0.210	0.043	0.214	0.210	0.050	0.216	0.210	0.034	0.213	0.210	0.040	0.214
2/0	0.167	0.041	0.172	0.167	0.049	0.174	0.167	0.033	0.170	0.167	0.039	0.171
3/0	0.133	0.040	0.139	0.133	0.048	0.141	0.133	0.037	0.137	0.132	0.038	0.138
4/0	0.106	0.039	0.113	0.105	0.045	0.114	0.105	0.031	0.109	0.105	0.036	0.111
250	0.0896	0.0384	0.0975	0.0895	0.0436	0.100	0.0894	0.0307	0.0945	0.0893	0.0349	0.0959
300	0.0750	0.0375	0.0839	0.0748	0.0424	0.0860	0.0746	0.0300	0.0804	0.0745	0.0340	0.0819
350	0.0644	0.0369	0.0742	0.0643	0.0418	0.0767	0.0640	0.0245	0.0705	0.0640	0.0334	0.0722
400	0.0568	0.0364	0.0675	0.0564	0.0411	0.0700	0.0563	0.0291	0.0634	0.0561	0.0329	0.0650
500	0.0459	0.0355	0.0580	0.0457	0.0399	0.0607	0.0453	0.0284	0.0535	0.0452	0.0319	0.0553
600	0.0388	0.0359	0.0529	0.0386	0.0390	0.0549	0.0381	0.0287	0.0477	0.0380	0.0312	0.0492
700	0.0338	0.0350	0.0487	0.0335	0.0381	0.0507	0.0330	0.0280	0.0433	0.0328	0.0305	0.0448
750	0.0318	0.0341	0.0466	0.0315	0.0379	0.0493	0.0309	0.0273	0.0412	0.0307	0.0303	0.0431
1000	0.0252	0.0341	0.0424	0.0248	0.0368	0.0444	0.0239	0.0273	0.0363	0.0237	0.0294	0.0378

NOTE—Cross-linked polyethylene insulated cable.

*Resistance values (R_L) at lower aluminum temperatures (T_L) are obtained by the formula $R_L = \frac{R_{90}(228.1 + T_L)}{318.1}$.

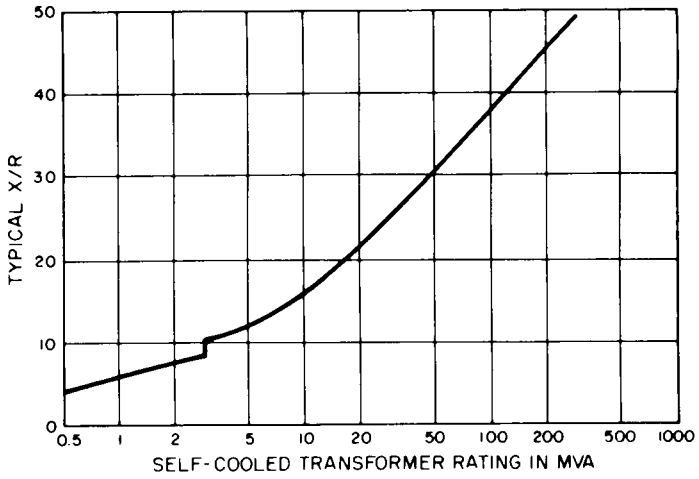

Source: Based on IEEE Std C37.010-1979.

Figure 4A-1—X/R ratio of transformers

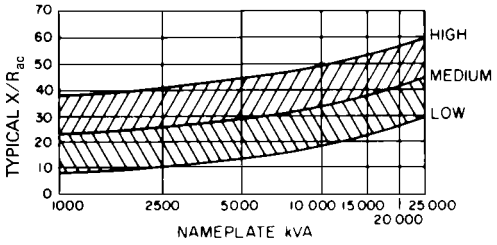

Source: Reprinted from IEEE Std C37.010-1979.

Figure 4A-2—X/R range for small generators and synchronous motors (solid rotor and salient pole)

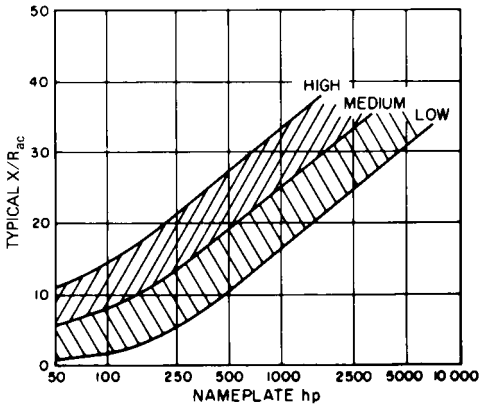

Source: Reprinted from IEEE Std C37.010-1979.

Figure 4A-3—X/R range for three-phase induction motors

Copyright The Institute of Electrical and Electronics Engineers, Inc.
Provided by IHS under license with IEEE
No reproduction or networking permitted without license from IHS
Not for Resale

Chapter 5
Application and coordination of protective devices

5.1 Purpose

The system and equipment protective devices guard the power system from the ever-present threat of damage caused by overcurrents and transient overvoltages that can result in equipment loss, system failure, and injury to personnel. This chapter presents the principles of adequate system and equipment protection by introducing the many protective devices and their applications, special problems, system conditions associated with transient overvoltages, sound engineering techniques of protective-device application and coordination, and suggested maintenance and testing procedures for circuit interrupting and protective devices. The subject of protection and coordination of industrial power systems is covered in additional detail in IEEE Std 242-1986 [B57].[1]

5.1.1 Considering plant operation [B2]

Industrial plants vary greatly in the complexity of electric distribution systems. A small plant may have a simple radial design with low-voltage fuse protection only, whereas a large plant complex may incorporate an intricate network of medium- and low-voltage distribution substations, uninterruptible power sources, and in-plant generation required to operate in parallel with or isolated from local utility networks. At an early design stage, the plant engineering representatives should meet with the local power company to review and resolve the requirements of both the plant and the utility.

The need for higher production from industrial plants has created demands for greater power system reliability. Trends to network systems and parallel operation with utilities have produced sources that have extremely high overcurrents during fault conditions. These trends lead to the development of new equipment standards.

The high costs of power distribution equipment and the time required to repair or replace damaged equipment, such as transformers, cable, high-voltage circuit breakers, etc., make it imperative that serious consideration be given to system-protection design.

The losses associated with an electrical service interruption due to equipment or system failures vary widely with different types of industries. For example, a service interruption in a machining operation means loss of production, loss of tooling, and loss from damaged products. Likewise, a service interruption in a chemical plant can cause loss of product and create major clean-up and restart problems. To avoid a disorderly shutdown, which can be both hazardous and costly, it may be necessary to tolerate a short-time overload condition and the associated reduction in life expectancy of the affected electric apparatus. Other industries such as refineries, paper mills, automotive plants, textile mills, steel mills, and food-processing plants are similarly affected, and losses can represent a substantial expense. Some

[1]The numbers in brackets preceded by the letter B correspond to those in the bibliography in 5.10.

Copyright The Institute of Electrical and Electronics Engineers, Inc.
Provided by IHS under license with IEEE
No reproduction or networking permitted without license from IHS
Not for Resale

types of loads can tolerate an interruption, whereas for other types of loads involving continuous processes and complex automation, even a momentary dip in voltage can be as serious as a complete service interruption. Thus the nature of the industrial operation is a major consideration in determining the degree of protection that can be justified.

5.1.2 Equipment capabilities

In addition to meeting the demands of overall system performance as dictated by the nature of the load, the protective devices must operate in conjunction with the associated circuit interrupters so as to afford protection to other power system equipment components. Transformers, cable, busway, circuit breakers, and other switching apparatus all have short-circuit withstand limits as established by the National Electrical Manufacturers Association (NEMA) and the American National Standards Institute (ANSI).

When a fault condition occurs, these devices, although perfectly intact, may be connected in series in the same circuit and subjected to severe thermal and magnetic stresses accompanying the passage of high-magnitude short-circuit current through their conducting parts. An important function of the system protective devices is to initiate operation of the circuit interrupter responsible for isolating the fault so that the other equipment connected in the same circuit is not stressed beyond safe limits. Otherwise, the initial fault condition can affect far more than the specific circuit to be isolated, and a widespread outage can result.

The design engineer should examine the performance capability of all the individual system equipment components and not just the process sensitivity to local outages when justifying the protection to be applied. System and equipment protection is one of the most important items in the process of system planning, and enough time should be allowed in the early stages of a system design to properly investigate the selection and application of the protective devices.

5.1.3 Importance of responsible planning

Some industrial plants, because of their size or the nature of their operations, are able to maintain electrical engineering staffs capable of the design, installation, and maintenance of an efficient protective system; other plants may find it more economical to engage competent engineering advice and services from consultants. This work is specialized and often very complex, and it is neither safe nor fair to expect the operating engineer to do it as a sideline. Modern computerized methods of calculating fault currents on complex systems are available from consulting firms and manufacturers. These provide accurate information essential for making decisions relative to the protection design in a short period of time [B67].

Protection in an electric system is a form of insurance. It pays nothing as long as there is no fault or other emergency, but when a fault occurs it can be credited with reducing the extent and duration of the interruption, the hazards of property damage, and personnel injury. Economically, the premium paid for this insurance should be balanced against the cost of repairs and lost production. Protection, well integrated with the class of service desired, may reduce capital investment by eliminating the need for equipment reserves in the industrial plant or utility supply system.

--`,,`,,`-`-`,,`,,`,`,,`---

Copyright The Institute of Electrical and Electronics Engineers, Inc.
Provided by IHS under license with IEEE
No reproduction or networking permitted without license from IHS Not for Resale

While the protective devices are the guardians of the power system, the industrial electrical engineer must be the custodian of the protection system. Adequate and regular maintenance and testing should be carried out, as well as a review of the protection scheme when major system changes occur. Integrity of the system protection and, thereby, the system performance, requires a continuing effort if it is to be preserved.

5.1.4 Personnel safety

In all the foregoing considerations of plant design and operation, safety to plant personnel must be of primary concern. The design engineer should be familiar with the latest revisions of codes and standards, such as the National Electrical Code (NEC) (ANSI/NFPA 70-1993 [B10]), the National Electrical Safety Code (NESC) (Accredited Standards Committee C2-1993 [B1], and other applicable state and local codes which apply to personnel safety. In addition, there are federal regulations prepared by the Occupational Safety and Health Administration (OSHA) which must be adhered to.

5.2 Analysis of system behavior and protection needs

5.2.1 Nature of the problem

It would be neither practical nor economical to build a fault-proof power system. Consequently, modern systems are designed to provide reasonable insulation, clearances, etc., but a certain number of faults must be tolerated during the life of the system. Even with the best design possible, materials deteriorate and the likelihood of faults increases with age. Every electrical system has the potential to experience short-circuit conditions. A sound knowledge of the effect of such conditions on system voltages and currents is necessary in designing protective schemes. A reliable protective system is one which is properly designed, regularly maintained, and does not have unnecessarily complex relaying schemes.

Operating records show that the majority of electric circuit faults originate as phase-to-ground failures. Protective devices should detect three-phase, phase-to-phase, double-phase-to-ground, as well as single phase-to-ground short circuits. There are two general classifications of three-phase systems: (1) ungrounded systems, and (2) grounded systems, in which one conductor, generally the neutral, is grounded either solidly or through an impedance. Both classifications of systems are subject to all the aforementioned types of faults, but the severity of those faults involving ground depends to a large extent on the method of system grounding and the magnitude of the grounding impedance.

5.2.2 Grounded and ungrounded systems

The general subject of system grounding (see IEEE Std 142-1991 [B56]) is treated from the viewpoint of system design in Chapter 7, and it is only necessary to observe here the effect on basic relaying methods of the choice between a grounded and an ungrounded system.

In grounded systems, phase-to-ground faults produce currents of sufficient magnitude to operate ground-fault-responsive overcurrent relays, which automatically detect the fault,

Copyright The Institute of Electrical and Electronics Engineers, Inc.
Provided by IHS under license with IEEE
No reproduction or networking permitted without license from IHS
Not for Resale

determine which feeder has failed, and initiate the opening of the correct circuit interrupters to de-energize the faulted portion of the system without interrupting service to healthy circuits. If the system neutral is grounded through a properly chosen impedance, the value of the ground-fault current can be restricted to a level that will avoid extensive damage at the point of the fault, yet be adequate for ground-fault relaying. In addition, the voltage dip caused by the flow of ground-fault current will be substantially reduced.

In ungrounded systems, as shown in figure 5-1(a), phase-to-ground faults produce relatively insignificant values of fault current. In a small, isolated-neutral industrial installation, the ground-fault current for a single line-to-ground fault may be well under one ampere, while the largest plant, containing miles of cable to provide electrostatic capacitance to ground, may produce as much as 20 A of ground-fault current. Overcurrent relays are not normally used to locate and remove such faults because they do not have the sensitivity to detect this low fault current, and because of the complexity of current flow pattern resulting from the fact that the source of the ground current is the distributed capacitance to ground of the unfaulted conductors. It is possible, however, to provide phase-to-ground voltage relays that will operate an alarm on the occurrence of a ground fault, but that cannot provide any indication of its exact location. The voltage and current distribution for normal operation and for a single-phase-to-ground fault (phase A) condition for an ungrounded system are shown in figure 5-1(b) and (c), respectively.

The one advantage of an ungrounded system lies in the possibility of maintaining service on the entire system, including the faulted section, until the fault can be located and the equipment shut down for repair. This advantage should be balanced against such disadvantages as the impossibility of relaying the fault automatically, the difficulty of locating the fault, the continuation of burning and the escalation of damage at the point of the fault, the continued overstressing of the insulation of the unfaulted phases (1.73 times operating voltage in the case of solid ground faults and perhaps much more in the case of intermittent ground faults), and the hazard of multiple ground faults and transient overvoltages. High-resistance grounding should be considered as a preferred alternate. It should be noted that the single-pole interrupting ratings of multiple-pole overcurrent devices must be evaluated wherever these systems are utilized.

5.2.3 Distortion of phase voltages and currents during faults

Balanced three-phase faults do not cause voltage distortion or current unbalance. Figure 5-2 shows the balanced conditions, both before and after a fault is applied on a system having an *X*/*R* ratio of approximately 1.7, which corresponds to an angle of 60 degrees between phase voltage and current or a 50% fault-circuit power factor. This condition would be realized by closing all three poles of switch SW_2 in figure 5-1(a). Other types of faults, such as phase-to-phase, single-phase-to-ground, and two-phase-to-ground, cause distorted voltages and unbalanced currents. The voltage distortion is greatest at the fault and minimum at the generator or source.

Currents and voltages that exist during a fault vary widely for different systems, depending on type and location of the fault and the impedance of the system grounding connection. The vector diagrams of figure 5-3 shows voltage and current relations that exist for different types

Copyright The Institute of Electrical and Electronics Engineers, Inc.
Provided by IHS under license with IEEE
No reproduction or networking permitted without license from IHS Not for Resale

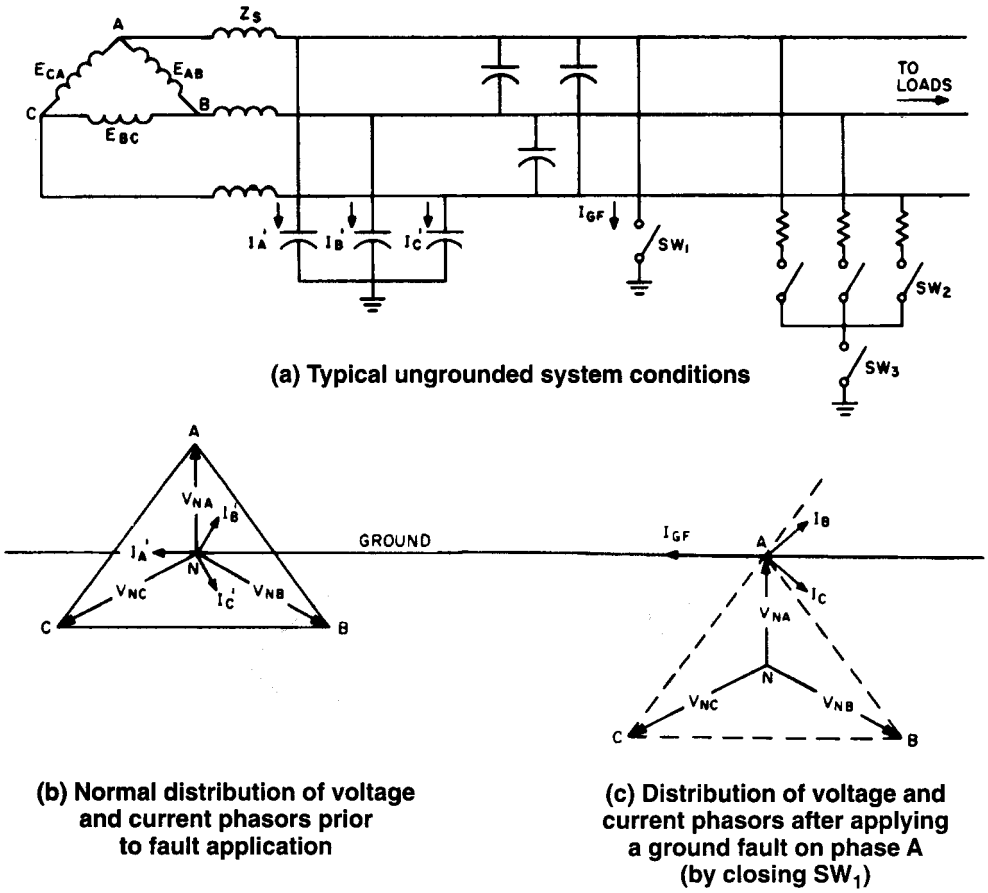

Figure 5-1—Analysis of steady-state conditions on an ungrounded system before and after the occurrence of a ground fault

of faults on a solidly grounded system in which the currents lag the voltages by 60 degrees. Load currents are not included.

These diagrams are typical of the fault conditions that cause protective devices to operate. The characteristics of the voltage distortion that accompanies a fault are used to enable special types of relays to discriminate between different types of faults having otherwise similar current conditions. Some of these special devices will be discussed in further detail later in this chapter. The distortion can be greater or less than that shown, depending on the impedance of the fault and its distance from the relay. The small voltage drop shown between the faulted phases represents the fault impedance (arc) voltage drop plus the voltage drop in the system conductors due to the flow of fault current between the relay and the fault point.

Copyright The Institute of Electrical and Electronics Engineers, Inc.
Provided by IHS under license with IEEE
No reproduction or networking permitted without license from IHS
Not for Resale

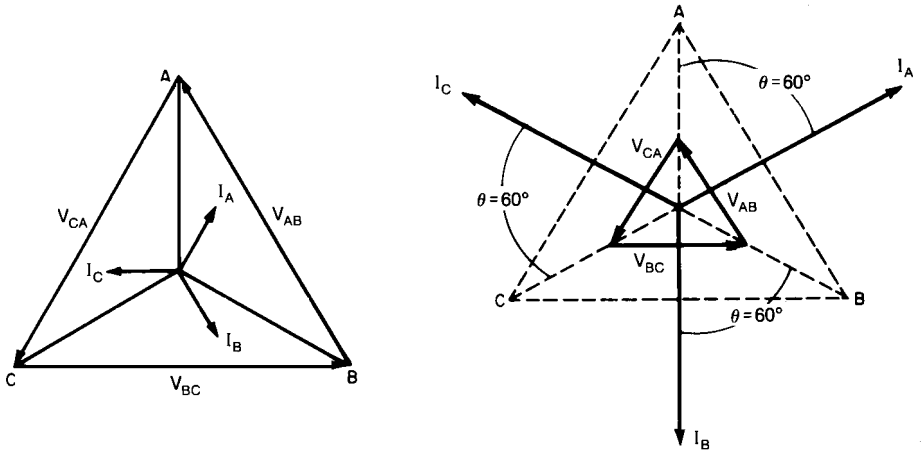

(a) Normal conditions with load applied

(b) Three-phase fault

Figure 5-2—Voltage and current phasor relationships for a balanced fault condition

5.2.4 Analytical restraints

The one-line diagram commonly used to represent three-phase systems is a very useful analytical tool when its limitations are properly observed. Its validity is limited to symmetrical three-phase loading of electrical systems.

One-line diagrams, for example, provide no means for properly representing the effect of single-phase loads on the operation of the system or the protective devices. Likewise, the influence of surge-protection equipment acting independently in any of the three phases cannot be correctly evaluated.

In the case of a line-to-ground fault on a three-phase system, the opening of that phase protector alone alters the system symmetry. Examination of a more precise three-phase diagram for a three-wire system reveals that it is still possible for current to flow through the remaining phases via the line-to-line connected paths at the load apparatus, and then to ground at the fault point. In four-wire systems, the opening of the phase protector effectively removes the fault and permits single-phase loads on the unfaulted phases to operate normally. However, three-phase motor loads will be subjected to unbalanced voltages resulting in abnormal heating.

Determining how much current continues to flow to the ground-fault after opening of one phase protector in a three-wire system is a complex problem due to the alteration in system symmetry and introduction of additional variable impedances. However, it is generally a much lower value than the initial line-to-ground fault current and, hence, it can take the

Copyright The Institute of Electrical and Electronics Engineers, Inc.
Provided by IHS under license with IEEE
No reproduction or networking permitted without license from IHS Not for Resale

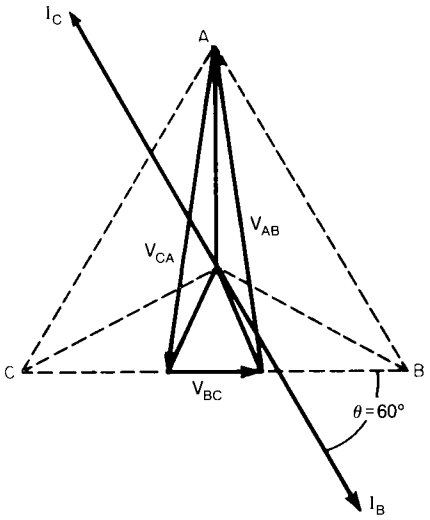

(a) Phase-to-phase fault between phases B and C on ungrounded system [close poles B and C of SW_2 in figure 5-1(a)]

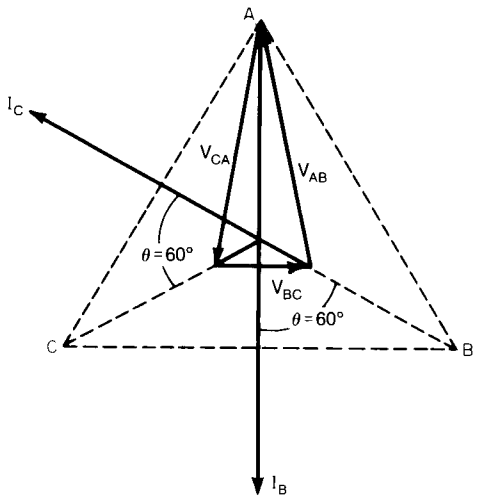

(b) Two-phase-to-ground fault between ground and grounded system [close SW_3 and poles B and C of SW_2 in figure 5-1(a)]

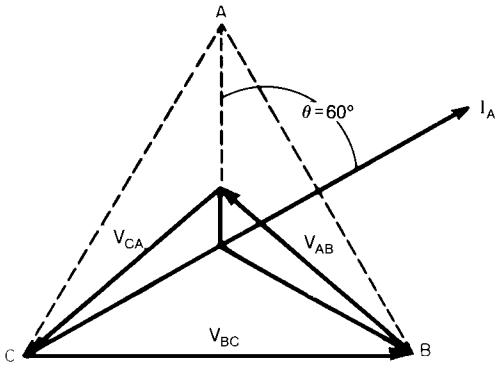

(c) Phase-to-ground fault between phase A and ground on grounded system

Figure 5-3—Voltage and current phasor relationships for various unbalanced fault conditions (system X/R = 1.7)

Copyright The Institute of Electrical and Electronics Engineers, Inc.
Provided by IHS under license with IEEE
No reproduction or networking permitted without license from IHS
Not for Resale

remaining protectors some time to sense and clear the circuit. Substantial heat with associated damage can be generated at the fault point before complete isolation of the circuit is accomplished.

By simultaneously opening all phases, such as by ground-fault protection, the three-phase symmetry is not altered and the condition described above need not be given consideration.

5.2.5 Practical limits of protection

When the industrial power system is in normal operation, all parts should have some form of automatic protection. However, some fault possibilities may be legitimately considered too improbable to justify the cost of specific protection. Before accepting a risk on this basis alone, the magnitude of the probable damage should also be seriously considered. Too much protection might be provided for failures that occur frequently but cause only minor difficulties, while rare but serious causes of trouble might be neglected. For example, internal transformer failures rarely occur, but the consequences may be very serious since such faults can cause fires and endanger personnel and equipment.

Most systems have some flexibility in the manner in which circuits are connected. The various possible arrangements should be considered in planning the protection system so as not to leave some emergency operating condition without protection. Some types of systems have so many possible operating combinations that protection cannot be applied to operate properly for all conditions. In such cases, the operating connections for which the protection is inadequate should be avoided.

5.3 Protective devices and their applications [B23], [B42], [B65]

5.3.1 General discussion

Power system protective devices provide the intelligence and initiate the action that enables circuit switching equipment to respond to abnormal or dangerous system conditions. Normally, relays control power circuit breakers rated above 600 V and current-responsive self-contained elements operate multiple-pole low-voltage circuit breakers to isolate circuits experiencing overcurrents on any phase. Similarly, fuses function alone or in combination with other suitable means to properly provide isolation of faulted or overloaded circuits. In other cases, special types of relays that respond to abnormal electric system conditions may cause circuit breakers or other switching devices to disconnect defective equipment from the remainder of the system.

In systems employing circuit breakers, other than those with direct acting devices that use fault current to power relaying and trip functions, there is always a risk that during a fault the system voltage can drop suddenly to a value too low for the protective devices to function. For this reason station battery sets, or capacitor trip devices, are usually employed to provide tripping energy. It is important to be able to test the circuit breaker and relay systems during power outages, whether planned or accidental. The stored energy system should be designed to provide these functions. In large systems with centralized switchgear, large battery sets are

Copyright The Institute of Electrical and Electronics Engineers, Inc.
Provided by IHS under license with IEEE
No reproduction or networking permitted without license from IHS Not for Resale

usually provided. Capacitor trip devices are often used in small low-voltage systems where manual charging of springs can supply the stored energy during prolonged power interruptions. Capacitor trips are often applied in small remote medium-voltage systems. In systems where direct acting devices are used for overcurrent protection, functions, such as undervoltage protection, sensitive ground-fault protection, or other similar protection, may require stored-energy tripping sources. (See Chapter 10, 10.3.6 Control Power.)

The following is a brief description of the types and characteristics of relays and other protective devices most commonly used in industrial plant power systems, along with some brief application considerations. A list of relay device numbers referenced with respective device functions, taken from IEEE Std C37.2-1991 [B35], appears in the annex at the end of this book.

5.3.2 Overcurrent relays[2]

The most common relay for short-circuit protection of the industrial power system is the overcurrent relay, as shown in figure 5-4. The overcurrent relays used in the industry are typically of the electromagnetic attraction, induction, solid-state, or bimetallic element types. Relays with bimetallic elements used for thermal overload protection are discussed in 5.3.15. The simplest overcurrent relay using the electromagnetic attraction principle is the solenoid type. The basic elements of this relay are a solenoid wound around an iron core and steel plunger or armature that moves inside the solenoid and supports the moving contacts. Other electromagnetic-attraction-type relays have hinged armatures or clappers of different shapes. These relays operate without any intentional time delay, usually within one-half cycle, and are called instantaneous overcurrent relays, Device 50. The construction of the induction disk-type overcurrent relay is similar to a watthour meter since it consists of an electromagnet and a movable armature, which is usually a metal disk on a vertical shaft restrained by a coiled spring. The relay contacts are operated by the movable armature (figure 5-5).

The pickup or operating current for all overcurrent relays is adjustable. When the current through the relay coil exceeds a given setting, the relay contacts close and initiate the circuit breaker tripping operation. The relay operates on current from the secondary of a current transformer.

When the overcurrent is of a transient nature, such as that caused by the starting of a motor or some sudden overload of brief duration, the circuit breaker should not open. For this reason, induction disk overcurrent relays, Device 51, are used since they have an inherent time delay that permits a current several times in excess of the relay setting to persist for a limited period of time without closing the contacts. If a relay operates faster as current increases, it is said to have an inverse-time characteristic. Overcurrent relays are available with inverse, very inverse, and extremely inverse time characteristics to fit the requirements of the particular application. There are also definite minimum-time overcurrent relays that have an operating time that is practically independent of the magnitude of current after a certain current value is reached. Induction disk overcurrent relays have a provision for variation of the time

[2]Figures 5-4 and 5-5 show different types of relays. This Recommended Practice does not intend to imply that the manufacturers who contributed photographs for these figures make the only, or the preferred, instrument of this type.

Copyright The Institute of Electrical and Electronics Engineers, Inc.
Provided by IHS under license with IEEE
No reproduction or networking permitted without license from IHS Not for Resale



Figure 5-4—Typical solid-state overcurrent relay

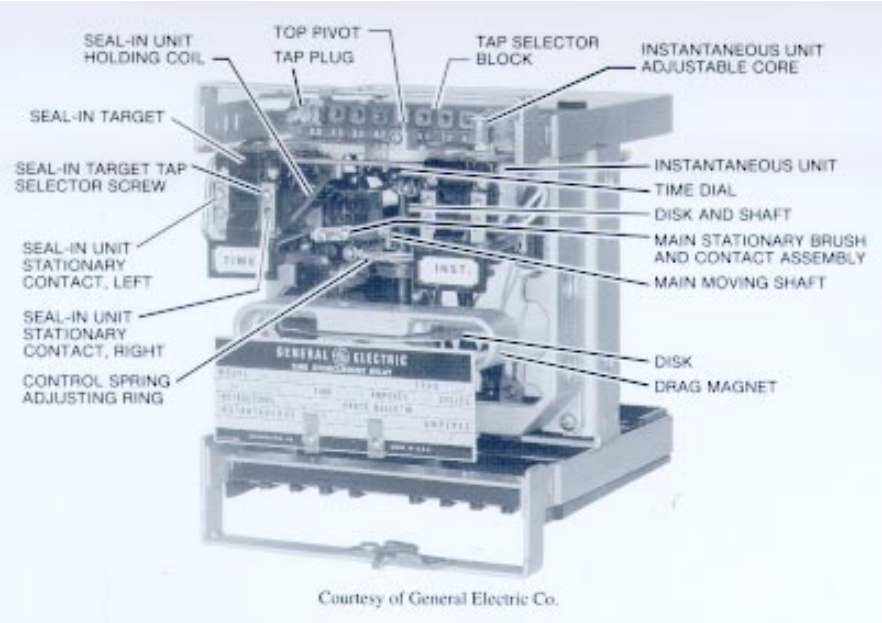

Figure 5-5—Induction-disk overcurrent relay with instantaneous attachment (relay removed from drawout case)

Copyright The Institute of Electrical and Electronics Engineers, Inc.
Provided by IHS under license with IEEE
No reproduction or networking permitted without license from IHS
Not for Resale

adjustment and permit change of operating time for a given current. This adjustment is called the *time lever* or *time dial setting* of the relay. Figure 5-6 shows the family of time current operating curves available with a typical inverse-time overcurrent relay. Such curves normally employ log-log scales to cover a wide range of time and current. Similar curves are published for other overcurrent relays having different time-delay characteristics. As is apparent, it is possible to adjust the operating time of relays. This is important since they are normally used to selectively trip circuit breakers that operate in series on the same system circuit. With increasing current values, the relay operating time will decrease in an inverse manner down to a certain minimum value. Figure 5-7 shows the characteristic curves of inverse (A), very inverse (B), and extremely inverse (C), time relays when set on their minimum and maximum time dial positions. It also shows the characteristics of the instantaneous element (D) that are usually supplied in these relays.

Overcurrent relays, and many other relays as well, are now available that use solid-state components to provide their operating characteristics. These are referred to as solid-state relays. Initial designs offered operating characteristics and adjustability features that matched those of their electromechanical (EM) predecessors in order to gain user familiarity and acceptance with the new design. There were early concerns regarding reliability, repeatability, and accuracy, but solid-state relays have been proven by many years of field service. The technology has offered freedom from some of the limitations of EM relays and some of the advantages offered are

a) Low burden levels placed on instrument transformers;
b) Very fast reset times (not limited by disk inertia);
c) Ability to control the shape of time–current/voltage characteristics;
d) Accurate, predetermined operating set points.

In addition, many new features not previously available are now being offered, such as multiple-phase elements and multiple functions contained in a single relay enclosure as well as the ability to communicate to a remote location.

5.3.3 Overcurrent relays with voltage restraint or voltage control, Device 51V [B22]

A short circuit on an electric system is always accompanied by a corresponding voltage dip, whereas an overload will cause only a moderate voltage drop. Therefore, a voltage-restrained or voltage-controlled overcurrent relay is able to distinguish between overload and fault conditions. A voltage-restrained overcurrent relay is subject to two opposing torques, an operating torque due to current and a restraining torque due to voltage. As such, the overcurrent required to operate the relay is higher at normal voltage than it is at reduced voltage. A voltage-controlled overcurrent relay operates by virtue of current torque only, the application of which is controlled by a voltage element set to operate at some predetermined value of voltage. Such relay characteristics are useful where it is necessary to set the relay close to or below load current, while retaining certainty that it will not operate improperly on normal load current.

Copyright The Institute of Electrical and Electronics Engineers, Inc.
Provided by IHS under license with IEEE
No reproduction or networking permitted without license from IHS Not for Resale

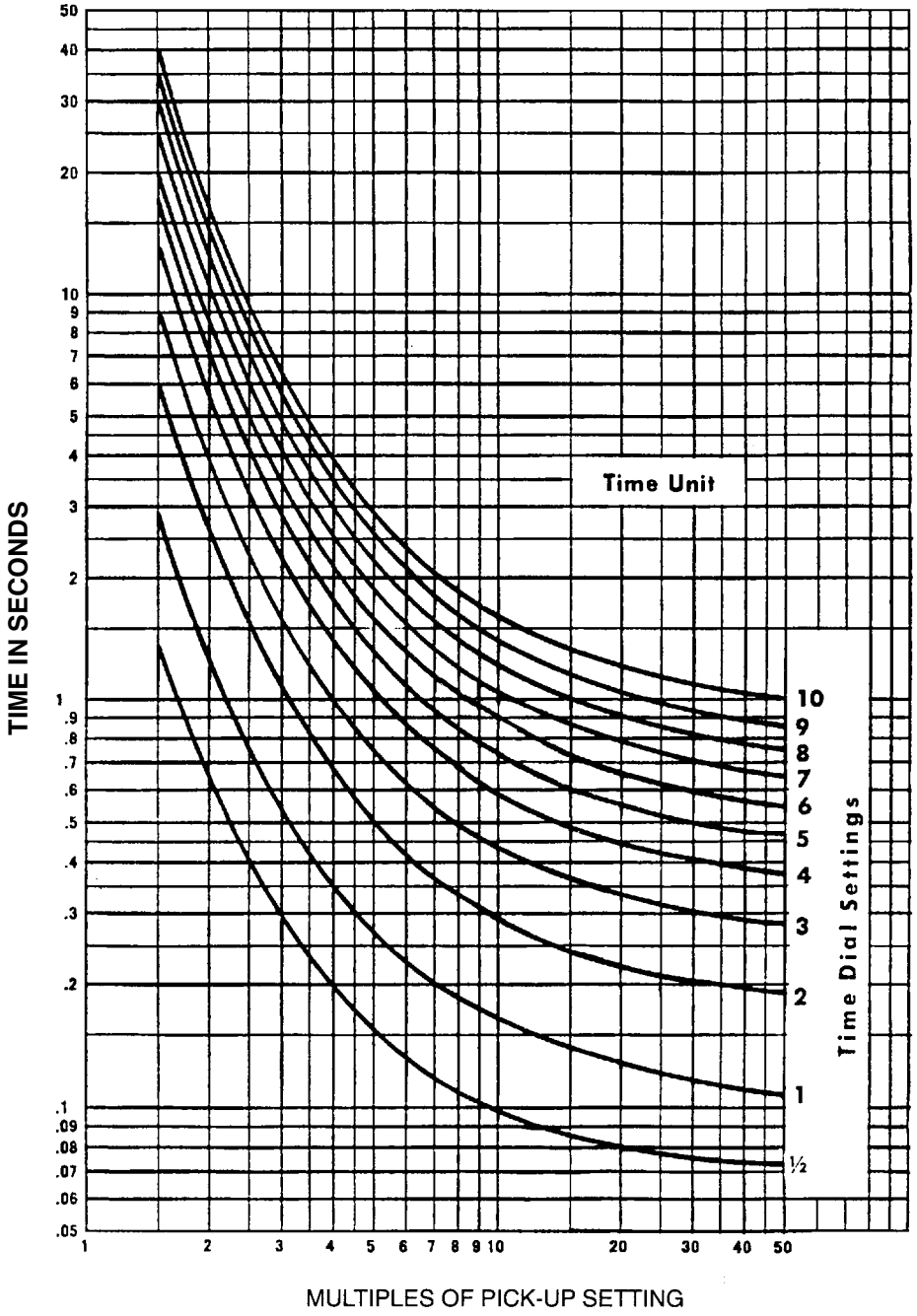

Figure 5-6—Time–current characteristics of a typical inverse-time overcurrent relay

Copyright The Institute of Electrical and Electronics Engineers, Inc.
Provided by IHS under license with IEEE
No reproduction or networking permitted without license from IHS
Not for Resale

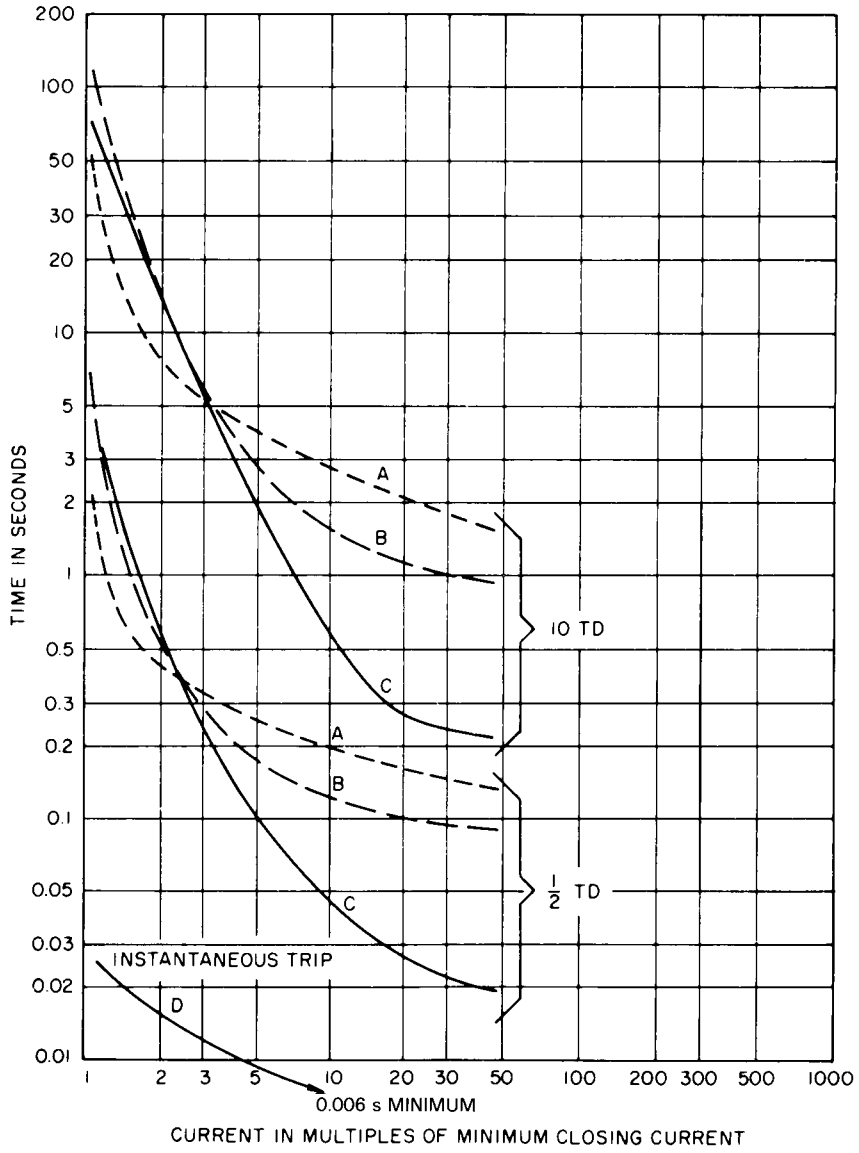

A Inverse
B Very Inverse
C Extremely Inverse
D Instantaneous
TD Relay Time Dial Setting

Figure 5-7—Typical relay time–current characteristics

Copyright The Institute of Electrical and Electronics Engineers, Inc.
Provided by IHS under license with IEEE
No reproduction or networking permitted without license from IHS
Not for Resale

5.3.4 Directional relays

5.3.4.1 Directional overcurrent relay, Device 67

Directional overcurrent relays consist of a typical overcurrent unit and a directional unit that are combined to operate jointly for a predetermined phase angle and magnitude of current. In the directional unit, the current in one coil, the operating element, is compared in phase-angle position with a voltage or current in another coil of that unit, the polarizing element. Such a relay operates only for current flow to a fault in one direction and will be insensitive to current flow in the opposite direction. The overcurrent unit of the directional overcurrent relay is practically the same as for the usual overcurrent relay and has similar definite time, inverse, very inverse, and extremely inverse time–current characteristics. The directional overcurrent relays can be supplied with voltage restraint on the overcurrent element.

The most commonly used directional relays are usually directionally controlled; that is, the overcurrent unit is inert until the directional unit detects the current in the tripping direction and releases or activates the overcurrent unit. Many directional relays are equipped with instantaneous elements, which may be either directional or non-directional. Unless it is possible to determine the direction of the fault by magnitude alone, the nondirectional instantaneous tripping feature should not be used.

5.3.4.2 Directional ground relay, Device 67N

The grounded-neutral industrial power system consisting of parallel circuits or loops may use directional ground relays, which are generally constructed in the same manner as the directional overcurrent relays used in the phase leads. To properly sense the direction of fault current flow, they require a polarizing source that may be either potential or current as the situation requires. Obtaining a suitable polarizing source requires special consideration of the system conditions during faults involving ground and a unique application of auxiliary devices.

5.3.4.3 Directional power relay, Device 32

The directional power relay is, in principle, a single-phase or three-phase contact-making wattmeter and operates at a predetermined value of power. It is often used as a directional overpower relay set to operate if excess energy flows out of an industrial plant power system into the utility power system, or to protect generators from “motoring.” Under certain conditions it may also be useful as an underpower relay to separate the two systems if the power flow drops below a predetermined value. Care should be used in the application of single-phase power relays because they may cause a false trip operation for certain power factor values.

5.3.5 Differential relays, Device 87

All the previously described relays have the common characteristic of adjustable settings to operate at a given value of some electrical quantity, such as current, voltage, frequency, power, or a combination of current and voltage or current and phase angle. There are other

Copyright The Institute of Electrical and Electronics Engineers, Inc.
Provided by IHS under license with IEEE
No reproduction or networking permitted without license from IHS Not for Resale

fault-protection relays that function by virtue of continually comparing two or more currents [figure 5-8(a)]. Fault conditions will cause a change of these compared values with reference to each other and the resulting differential current can be used to operate the relay. However, current transformers have a small error in ratio and phase angle between the primary and secondary currents, depending upon variations in manufacture, the magnitude of current, and the connected secondary burden. These errors will cause a differential current to flow even when the primary currents are balanced. The differential current may become proportionately larger during fault conditions, especially when there is a dc component present in the fault current. The differential relays, of course, must not operate for the highest difference or error current that can flow for a fault condition external to the protected zone. To provide this feature, the percentage-type differential relay, Device 87, illustrated at right of figure 5-8(a), has been developed; it has special restraint windings to prevent improper operation due to the error currents on heavy through fault conditions, while providing very sensitive detection of low-magnitude faults inside the differentially protected zone.

5.3.5.1 Differential protection of motors and generators

The percentage differential relay shown at right in figure 5-8(a) can be selected with restraint coils to provide a restraining torque of 10% to 25% of the through current on external faults, but produce zero restraint on internal faults.

Another form of motor differential protection involves the routing of the machine phase and neutral leads of each phase through a window-type current transformer as shown in figure 5-8(b). Under normal conditions, the magnetizing flux produced by the currents in each lead adds to zero and no output is produced. A fault in any winding will result in the fault current flowing in only one of the leads, causing a differential current (and flux) that will, in turn, produce an output signal. The single relay, a conventional instantaneous overcurrent, and current transformer employed per phase in this scheme is less expensive, although additional machine terminal box space for neutral conductor cabling is required.

5.3.5.2 Differential protection of a two-winding transformer bank

When differential relays are used for transformer protection, the inherent characteristics of power transformers introduce a number of problems that do not exist in generators and motors. If the current transformer secondary currents on the two sides of the transformer differ in magnitude by more than the range provided by the relay taps provided, the relay currents can be altered by means of auxiliary current transformers. If the transformer has a delta-wye connection, the high-voltage and low-voltage currents are not in phase; however, the secondary currents can be brought into phase by connecting the current transformers in delta on the wye side, and in wye on the delta side. Some microprocessor-type differential relays take the transformer delta-wye shift into account internally and delta-connected CTs are not necessary. The differential output signals of the current transformers are subject to the same errors as discussed above for generators. In addition, a significant trip current can be observed at the relay input during transformer energization due to the primary magnetizing inrush current. This is why special percentage differential relays must be used. The best protection can be provided by using the harmonic restraint-type relay. This relay typically has a filter to the operating coil that blocks the harmonic currents, and a filter to the restraint coil that passes

Copyright The Institute of Electrical and Electronics Engineers, Inc.
Provided by IHS under license with IEEE
No reproduction or networking permitted without license from IHS
Not for Resale

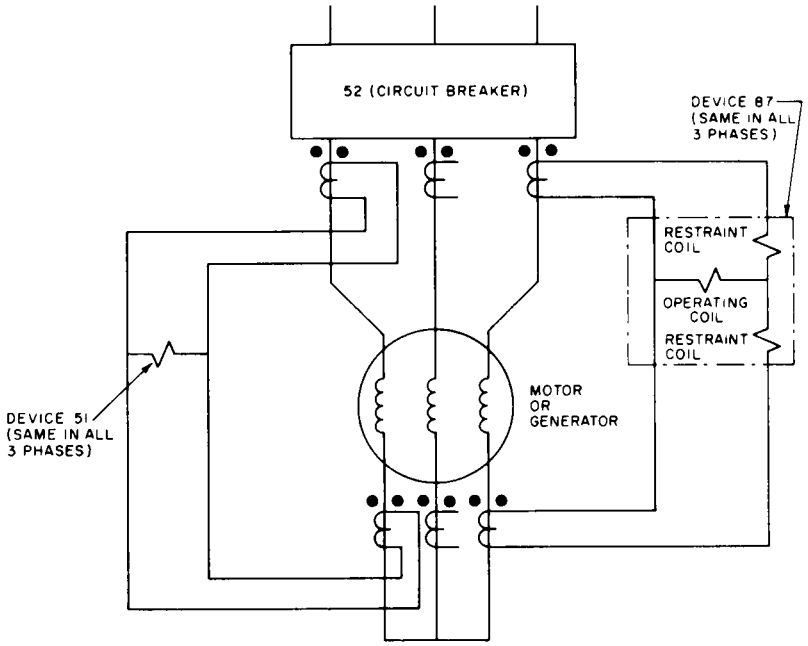

(a) Using percentage-type differential relays (Device 87) or time-delay overcurrent relays (Device 51)

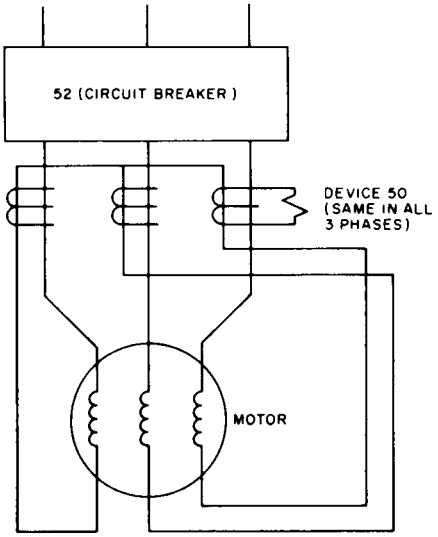

(b) Using instantaneous relays (Device 50), for motors only

Figure 5-8—Arrangements for motor and generator differential protection

Copyright The Institute of Electrical and Electronics Engineers, Inc.
Provided by IHS under license with IEEE
No reproduction or networking permitted without license from IHS
Not for Resale

only harmonic currents. Using this technique, undesired operation on magnetizing inrush currents is prevented while retaining good sensitivity for fault conditions.

5.3.5.3 Differential protection of buses

Large industrial power system buses often have sectionalizing circuit breakers so that a fault in one of the bus sections can be isolated without involving the remaining sections. Each of the bus sections or the whole bus, where it is not sectionalized, can be provided with differential relay protection, which isolates the bus section involved in case of an internal fault.

Differential bus protection distinguishes between internal and external fault by comparing the magnitudes of the currents flowing in and out of the protected bus. The major differences between bus protection and generator or transformer protection are in the number of circuits in the protected zone and in the magnitude of currents involved in the various circuits. Figure 5-9 shows phase and ground differential protection of an eight-circuit bus using overcurrent relays. This method, of course, is subject to the same disadvantages discussed in the preceding paragraphs and is rarely used. Other more acceptable types of bus-protective relays are normally used, including the differential voltage relay, the percentage differential relay, and the linear coupler.

a) *Differential voltage relay.* The most common method of bus protection is the differential voltage relay. This scheme uses through-type iron-core current transformers. The problem of current-transformer saturation is overcome by using a voltage-responsive (high-impedance) operating coil in the relay [B25].

b) *Percentage differential relay.* Where the number of circuits connected to the bus is relatively small, relays using the percentage differential principle similar to the transformer differential relay may be used. The problem of application of percentage differential relays for bus protection, however, increases with the number of circuits connected to the bus. All current transformers supplying the relays must have identical ratios and characteristics. Variations in the characteristics of the current transformers, particularly the saturation phenomena under short-circuit conditions, present the greatest problem to this type of protection and often limit it to applications where only a limited number of feeders are present.

c) *Linear coupler* [B31]. The linear-coupler bus-protection scheme eliminates the difficulty due to differences in the characteristics of iron-core current transformers by using air-core mutual inductances. Since it does not contain any iron in its magnetic circuit, the linear coupler is free of any dc or ac saturation. The linear couplers of the different circuits are connected in series and produce voltages that are directly proportional to the currents in the circuits. For normal conditions, or for external faults, the sum of the voltages produced by linear couplers is zero. During internal (bus) faults, however, this voltage is no longer zero and operates a sensitive relay to trip all circuit breakers to clear the bus fault.

   Bus protection using differential voltage relays or linear couplers is not limited as to number of source and load feeders, and in general is faster in operation than protection using the percentage differential principle. It should be noted that linear couplers

Copyright The Institute of Electrical and Electronics Engineers, Inc.
Provided by IHS under license with IEEE
No reproduction or networking permitted without license from IHS Not for Resale

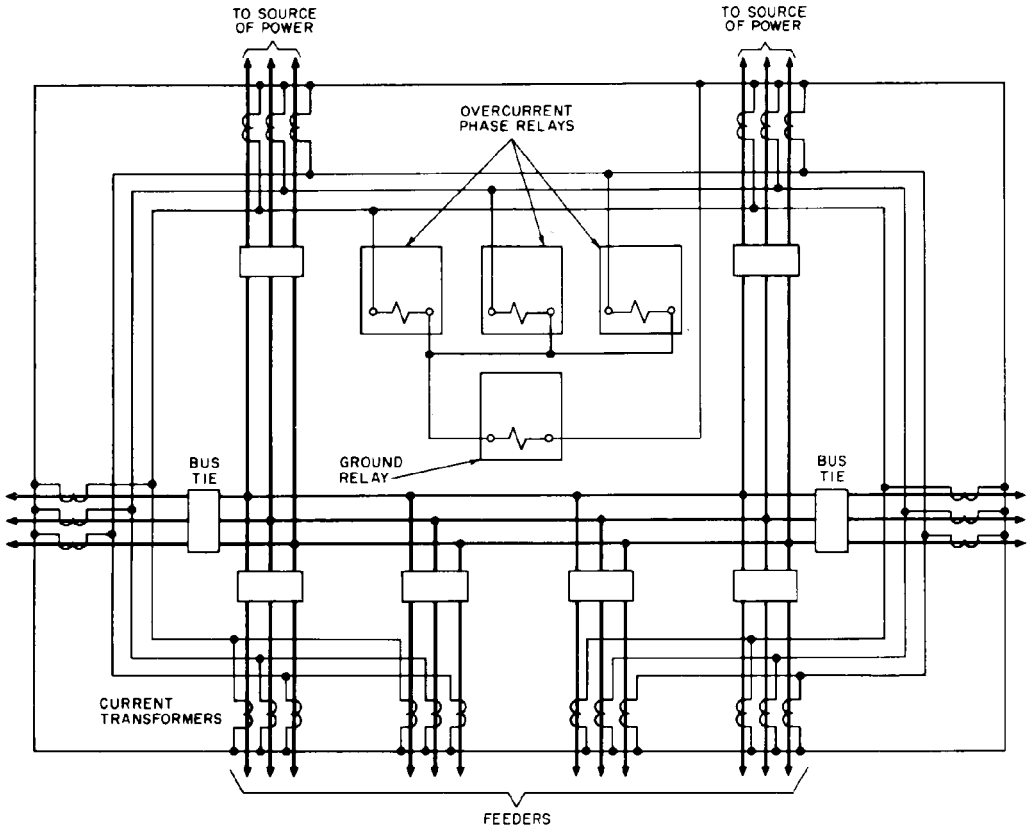

Figure 5-9—Phase and ground protection of an eight-circuit bus using standard induction-disk overcurrent relays

or current transformers used for differential voltage relays cannot be used for other purposes. Separate current transformers are required for line relaying and metering.

5.3.6 Current balance relay, Device 46

A phase-balance current-comparison relay or negative-sequence current relay provides sensitive unbalanced-phase-current protection for rotating machinery, such as generators and motors. In applying these relays it is assumed that under normal conditions the phase currents in the three-phase supply to the equipment and the corresponding output signals from each phase current transformer are balanced. Should an open circuit develop in any of the phases, or should the loads become sufficiently unbalanced, the currents will become unbalanced and the relay will operate. The phase-balance current relay affords protection against damage to the motor or generator due to single-phase operation. This type of protection is not provided for by other relays. Another current-balance type of differential protection for motors, which is both simple and relatively inexpensive, is provided by the use of a single current transformer zero-sequence relay scheme and is discussed further in 5.3.7.2.

Copyright The Institute of Electrical and Electronics Engineers, Inc.
Provided by IHS under license with IEEE
No reproduction or networking permitted without license from IHS Not for Resale

5.3.7 Ground-fault relaying [B27], [B78]

5.3.7.1 Residual connection

Where the industrial power system neutral is intentionally grounded to allow ground-fault current of a few hundred amperes or greater to flow in the conductors, ground relaying may be used to provide improved protection. This is often an overcurrent relay connected in the common lead of the wye-connected secondaries of three line-current transformers. Figure 5-10 shows the typical current transformer and relay connections for this application. When used on four-wire systems, an additional current transformer in the neutral conductor is required to balance the residual signal of the normal line-to-neutral load currents. The ground relay can be set to pick up at a much lower current value than the phase relays because there is no current flowing in the residual circuit due to normal load current. However, when large ratio current transformers are used, the sensitivity may be limited by the minimum tap setting available on most relays.

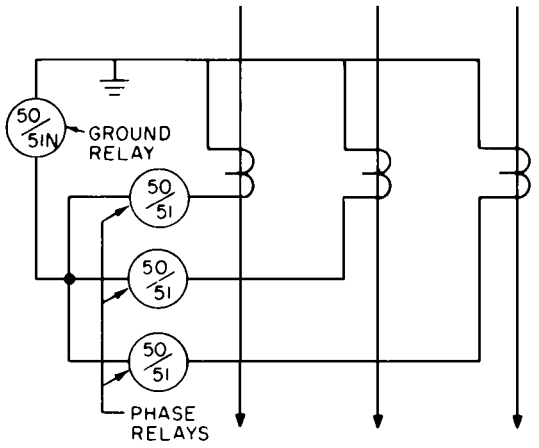

Figure 5-10—Standard arrangement for residually connected ground relay

Overcurrent relays used for ground-fault protection generally are the same as those used for phase-fault protection, except that a more sensitive range of minimum operating current values is possible since they see only fault currents. Relays with inverse or very inverse time characteristics are best suited for ground- fault relays since they provide a more constant operating time over the fault current range. Precaution should be used, however, in applying this type of residually connected ground relay, since it is subject to nuisance operation due to error currents arising from current transformer saturation and unmatched characteristics in the manner described for differential relays. Often the optimum speed and sensitivity of a residual ground relay must be compromised because of this.

Copyright The Institute of Electrical and Electronics Engineers, Inc.
Provided by IHS under license with IEEE
No reproduction or networking permitted without license from IHS
Not for Resale

5.3.7.2 Zero-sequence sensor (core balance)

An improved type of ground-fault protection can be obtained by a zero-sequence relay scheme in which a single window-type current transformer is mounted so as to encircle all three phase conductors, as illustrated in figure 5-11. On four-wire systems with possible unbalanced line-to-neutral loads, the neutral conductor must also pass through the current transformer window. Only circuit faults involving ground will produce a current in the current-transformer secondary to operate the relay. Since only one current transformer is employed in this method of sensing ground-faults, the relaying is not subject to current-transformer errors due to ratio mismatch or dc saturation effects; however, ac saturation can cause appreciable error. Therefore, each relay-current transformer combination should be tested before being applied in order to be assured of predictable performance. This scheme is widely applied on 5 kV and 15 kV systems, and is also used on low-voltage systems for improved protection. It is also often used as an economical alternative to differential protection for large motors on grounded systems.

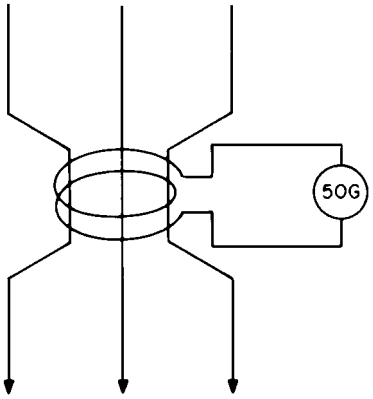

Figure 5-11—Relay and current-transformer connection for zero-sequence ground relay

Some solid-state zero-sequence relays are available to protect 600 V and 480 V systems from arcing ground faults. Arcing ground faults extinguish and then restrike for short periods during individual voltage half-wave periods. Some ground-fault relays may reset after each current impulse and never trip. This will permit a considerable amount of damage to accumulate. There are other relays having memory characteristics that integrate the sensed current impulses with time and will trip when the pickup setting is reached. This type of relay should be used.

5.3.7.3 Neutral connected relaying

A time overcurrent relay, Device 51G, connected to a current transformer located in the grounded neutral of a transformer or generator, provides a convenient, low-cost method of

Copyright The Institute of Electrical and Electronics Engineers, Inc.
Provided by IHS under license with IEEE
No reproduction or networking permitted without license from IHS Not for Resale

detecting ground faults. Since only ground-fault currents will flow in this relay, it can be set to operate on very low values of current. This scheme is widely applied on 5 kV and 15 kV systems where low-resistance grounding is frequently used, and the fault current may be as low as 200 A. The relay can be set to minimum values of current pickup and time delay to be selective with load-side feeder ground-fault relays.

This scheme is also used on solidly grounded, 480 V, three-phase three-wire and four-wire systems. In four-wire systems where two transformers are operated in parallel or in a secondary selective scheme, special considerations are necessary [B29]. The relay can be set to operate on low values of current and time delay that will be selective with the feeder ground-fault devices. When there is no ground-fault device on the feeders, the relay pickup and time delay should be set to be selective with the trip characteristic of the largest feeder phase overcurrent device.

Another form of ground-fault protection is when the neutral resistor is sized to limit the ground-fault current to a few amperes, that is, 1–10 A. This method, known as high-resistance grounding, limits the damage at the fault site such that the fault is not automatically cleared, but is detected and an alarm initiated. An overvoltage relay, Device 59G, is used, which is connected across the resistor and senses the voltage that will appear across it only during ground faults [B24]. Additional information on grounding methods can be found in IEEE Std 142-1991 [B56].

5.3.8 Synchronism-check and synchronizing relays, Device 25

The synchronism-check relay is used to verify when two ac circuits are within the desired limits of frequency and voltage phase angle to permit them to operate in parallel. These relays should be employed in switching applications on systems known to be normally paralleled at some other location so that they are only checking that the two sources have not became electrically separated or displaced by an unacceptable phase angle. The synchronizing relay, on the other hand, monitors two separate systems that are to be paralleled, automatically initiating switching as a function of the phase-angle displacement, frequency difference (beat frequency), and voltage deviation, as well as the operating time of the switching equipment, to accomplish interconnection when conditions are acceptable. An example of this application is a plant generating its own power with a parallel-operated tie with a utility system. The utility end of the tie line must have synchronizing relays that will check conditions on both systems prior to paralleling and initiate the interconnection so as to avoid any possibility of tying with the industrial plant generators out of phase.

5.3.9 Pilot-wire relays, Device 87L [B23], [B30]

The relaying of tie lines, either between the industrial system and the utility system or between major load centers within the industrial system, often presents a special problem. Such lines should be capable of carrying maximum emergency load currents for any length of time, and they should be removable from service quickly should a fault occur. A type of differential relaying called pilot-wire relaying responds very quickly to faults in the protected line. Faults are promptly cleared, which minimizes line damage and disturbance to the system, yet the relay is normally unresponsive to load currents and to currents flowing to faults

Copyright The Institute of Electrical and Electronics Engineers, Inc.
Provided by IHS under license with IEEE
No reproduction or networking permitted without license from IHS
Not for Resale

in other lines and equipment. The various types of pilot-wire relaying schemes all operate on the principle of comparing the conditions at the terminals of the protected line, the relays being connected to operate if the comparison indicates a fault in the line. The information necessary for this comparison is transmitted between terminals over a pilot-wire circuit, hence the designation of this type of relaying. Because, like all differential schemes, it is completely and inherently balanced within itself and completely selective, the pilot-wire relay scheme does not provide protection for faults of the adjacent station bus or beyond it. The new static wire pilot differential relay [B30] operates on the circulating current principle. It offers an ideal form of cable differential protection for industrial plants. The pilot wire circuit may be a set of secondary conductors interconnecting the two relay terminals, a dedicated telephone line circuit, or a fiber-optic circuit. The latter is used where freedom from induced voltages, displaced potentials, or telephone interference is important for maximum reliability.

5.3.10 Voltage relays

Voltage relays that function at predetermined values of voltage may be overvoltage, undervoltage, a combination of both, voltage unbalance (comparing two sources of voltage), reverse phase voltage, or excess negative-sequence voltage induced by single phasing of a three-phase system. Plunger-type, induction-type, or solid-state-type relays are available. Adjustments of pickup or dropout voltage and operation timing are usually provided in these relays. Plunger-type relays are usually instantaneous in operation, although bellows, dash pots, or other delay means can be provided. The time-delay feature is often required in order that transient voltage disturbances will not cause nuisance relay operation. Some typical voltage relay applications are as follows:

a) *Over- or under voltage relays*
   1) Capacitor switching control
   2) AC and dc overvoltage protection for generators
   3) Automatic transfer of power supplies
   4) Load shedding on undervoltage
   5) Undervoltage protection for motors
b) *Voltage balance relays*. Blocking the operation of a voltage-controlled current relay when a potential transformer fuse blows.
c) *Reverse-phase voltage relays*
   1) Detection of reverse-phase connections of interconnecting circuits, transformers, motors, or generators
   2) Prevention of any attempt to start a motor with one phase of the system open
d) *Negative-sequence voltage relays*. Detection of single phasing, damaging phase voltage unbalance, and reversal of phase rotation of supply for protection of rotating equipment.

5.3.11 Distance relays, Device 21 [B23]

Distance relays comprise a family of relays that measure voltage and current, and the ratio is expressed in terms of impedance. Typically, this impedance is an electrical measure of the distance along a transmission line from the relay location to a fault. The impedance can also

Copyright The Institute of Electrical and Electronics Engineers, Inc.
Provided by IHS under license with IEEE
No reproduction or networking permitted without license from IHS Not for Resale

represent the equivalent impedance of a generator or large synchronous motor when a distance relay is used for loss-of-field protection.

The measuring element is usually instantaneous in action, with time delay provided by a timer element so that the delay, after operation of a given measuring element, is constant. In a typical transmission-line application, three measuring elements are provided. The first operates only for faults within the primary protection zone of the line and trips the circuit breaker without intentional time delay. The second element operates on faults not only in the primary protection zone, but also in one adjacent or backup protection zone, and initiates tripping after a short time delay. The third element is set to include a more distant zone and to trip after a longer time delay. These relays have their greatest usefulness in applications where selective stepped operation of circuit breakers in series is essential, where changes in operating conditions cause wide variations in magnitudes of fault current, and where load currents may be large enough, in comparison with fault currents, to make overcurrent relaying undesirable.

The three main types of distance relay and their usual applications are as follows:

a) *Impedance-type*. Phase-fault relaying for moderate-length lines.

b) *Mho-type*. Phase-fault relaying for long lines or where severe synchronizing power surges may occur. Generator or large synchronous motor loss-of-field relaying [B79].

c) *Reactance-type*. Ground-fault relaying and phase-fault relaying on very short lines and lines of such physical design that high values of fault arc resistance are expected to occur and affect relay reach, and on systems where severe synchronizing power surges are not a factor.

5.3.12 Phase-sequence or reverse-phase relays, Device 47

Reversal of the phase rotation of a motor may result in costly damage to machines, long shutdown, and lost production. Important motors are frequently equipped with phase-sequence or reverse-phase relay protection. If this relay is connected to a suitable potential source, it will close its contacts whenever the phase rotation is in the opposite direction. It also can be made sensitive to unbalanced voltage or under/overvoltage conditions (see 5.3.10).

5.3.13 Volts per hertz overexcitation relay, Device 24

Modern generator and transformer designs are optimized at 60 Hz to reduce materials within equipment. With less material over which to distribute flux, higher flux densities exist causing greater sensitivity to the added flux and resulting thermal loading due to the overexcitation. Overexcitation occurs when the ratio of voltage to frequency, volts per hertz, is excessive due to generator startup, shutdown, or load rejection. Though excitation systems generally include circuits to prevent overexcitation, it is common practice to provide a separate relay to protect the generator and associated transformers during manual control or in the event of excitation system failure.

Copyright The Institute of Electrical and Electronics Engineers, Inc.
Provided by IHS under license with IEEE
No reproduction or networking permitted without license from IHS Not for Resale

5.3.14 Frequency relays, Device 81

Frequency relays sense under- or over-frequency conditions during system disturbances. Most frequency relays have provision for adjustment of operating frequency and voltage. The speed of operation depends on the deviation of the actual frequency from the relay setting. Some frequency relays operate if the frequency deviates from the set value. Others are actuated by the rate at which the frequency is changing. The usual application of this type of relay is to selectively drop system load based on the frequency decrement in order to restore normal system stability.

5.3.15 Temperature-sensitive relays, Device 49

Temperature-sensitive relays usually operate in conjunction with temperature-detecting devices, such as resistance temperature detectors or thermocouples located in the equipment to be protected, and are used for protection against overheating of large motors (above 1500 hp), generator stator windings, and large transformer windings.

For generators and large motors, several temperature detectors are usually embedded in the stator windings, and the hottest (by test) reading detector is connected into the temperature relay bridge circuit. The bridge circuit is balanced at this temperature, and an increase in winding temperature will increase the resistance of the detector, unbalance the bridge circuit, and cause relay operation. Transformer temperature relays operate in a similar manner from detecting devices set in winding hot spot areas. Some relays are provided with a 10 °C differential feature that will prevent re-energizing of the equipment until the winding temperature has dropped 10 °C.

5.3.16 Pressure-sensitive relays

Pressure-sensitive relays used in power systems respond either to the rate of rise of gas pressure (sudden pressure relay) or to a slow accumulation of gas (gas detector relay), or a combination of both. Such relays are valuable supplements to differential or other forms of relaying on power, regulating, and rectifier transformers.

A sudden rise in the gas pressure above the liquid-insulating medium in a liquid-filled transformer indicates that a major internal fault has occurred. The sudden-pressure relay will respond quickly to this condition and isolate the faulted transformer. Slow accumulation of gas (in conservator tank-type transformers) indicates the presence of a minor fault, such as loose contacts, grounded parts, short-circuited turns, leakage of air into the tank, etc. The gas-detector relay will respond to this condition and either sound an alarm or isolate the faulted transformer.

5.3.17 Replica-type temperature relays

Thermally activated relays respond to heat generated by current flow in excess of a certain predetermined value. The input to the relay is normally the output of the current transformer whose ratio should be carefully selected to match the available relay ratings. Many varied types are available, the most common being the bimetal strip and the melting alloy types. The

Copyright The Institute of Electrical and Electronics Engineers, Inc.
Provided by IHS under license with IEEE
No reproduction or networking permitted without license from IHS Not for Resale

relay should be checked for variations in operating characteristics as a function of ambient temperature.

Since the operating characteristics of this thermal replica-type relay closely match general-purpose motor heating curves in the light and medium overload areas, they are used almost exclusively for overload protection of motors up to 1500 hp.

5.3.18 Auxiliary relays

Auxiliary relays are used in protection schemes whenever a protective device cannot in itself provide all the functions necessary for satisfactory fault isolation. This type of relay is available with a wide range of coil ratings, contact arrangements, and tripping functions, each suited for a particular application. Some of the most common applications of auxiliary relays are circuit-breaker lockout, circuit-breaker latching, targeting, multiplication of contacts, timing, circuit supervision, and alarming.

5.3.19 Direct-acting trip devices for low-voltage power circuit breakers

5.3.19.1 Electromechanical trip devices

Low-voltage power circuit breakers were for many years equipped with electromechanical series trip-devices as the basic form of protection. State-of-the-art technology using solid-state devices has replaced electromechanical trip devices on low-voltage breakers; however, these older devices may still be available on replacement breakers. The electromechanical series trip is of the moving armature type, using a heavy copper coil carrying the full load current to provide the magnetizing force. Overload protection is provided by a dashpot restraining the movement of the armature. Short-circuit protection is provided when the magnetic force suddenly overcomes a separate restraint spring. A separate adjustable unit is required for each trip rating.

Several combinations of adjustable long-time, short-time, and instantaneous overcurrent trip characteristics are available. These units do have some inherent disadvantages. The trip point will vary depending upon age and severity of duty, and the devices have a limited calibration range. Because the trip characteristic curve of electromechanical devices has a very inverse shape with a broad tolerance band (figure 5-12), selective coordination of tripping with other devices is difficult.

5.3.19.2 Solid-state trip devices

In contrast to electromechanical devices, solid-state trip devices operate from a low-current signal generated by current sensors or current transformers in each phase. Signals from the sensors are fed into the solid-state trip unit, which evaluates the magnitude of the incoming signal with respect to its calibration setpoints and acts to trip the circuit breaker if preset values are exceeded. As with electromechanical trip devices, several overcurrent trip characteristics are available. In most instances, the trip ratings of solid-state devices are determined by switch settings or ratings plugs; thus, separate trip units are not required for each trip rating.

Copyright The Institute of Electrical and Electronics Engineers, Inc.
Provided by IHS under license with IEEE
No reproduction or networking permitted without license from IHS Not for Resale

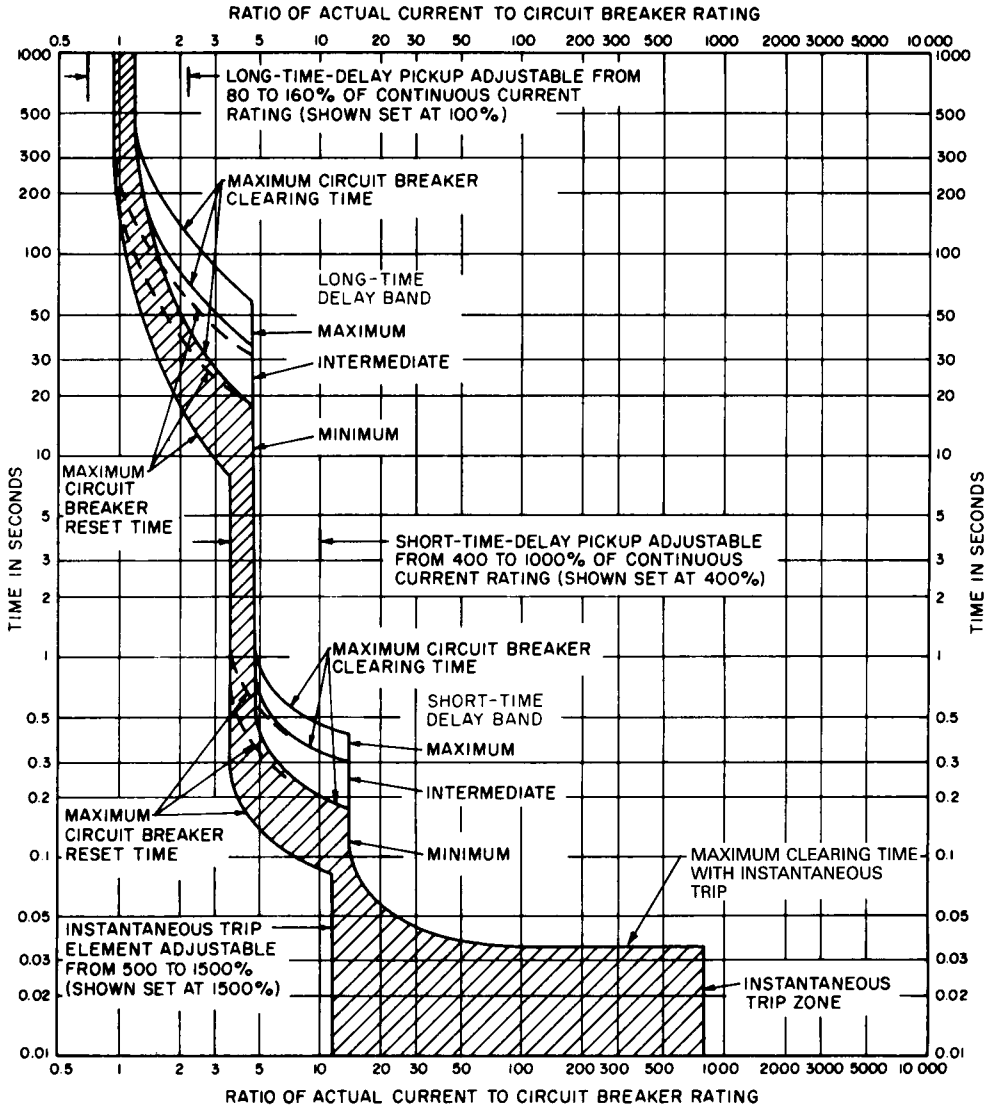

Figure 5-12—Typical time–current plot for electromechanical trip devices

In addition to phase protection, the solid-state trip device is available with integral ground-fault trip protection.

Solid-state trip devices are more accessible on the circuit breaker than are electromechanical trip devices and are much easier to calibrate since low values of currents can be fed through the device to simulate the effect of an actual fault-current signal. Special care or provisions are sometimes necessary to guarantee predictable operation when applying solid-state trip devices to loads having other than the pure sinusoidal current wave shapes. Vibration, temperature, altitude, and duty cycle have virtually no effect on the calibration of solid-state trip

Copyright The Institute of Electrical and Electronics Engineers, Inc.
Provided by IHS under license with IEEE
No reproduction or networking permitted without license from IHS
Not for Resale

devices. Thus, excellent reliability is generally possible. The most important advantage of solid-state trip devices is the shape of the trip characteristic curve, which is essentially a straight line throughout its working portion (figure 5-13). These devices have a very narrow and predictable tolerance, which enables several such devices to be selectively coordinated.

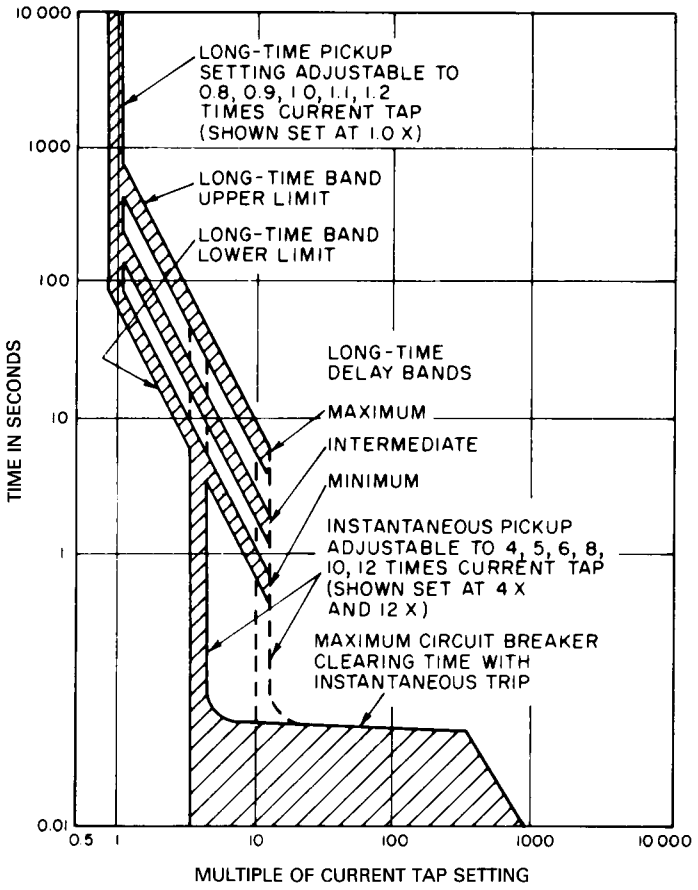

Figure 5-13—Typical time–current plot for solid-state trip devices

5.3.20 Fuses [B61]

The term fuse is defined by IEEE Std 100-1992 [B55] as “an overcurrent protective device with a circuit opening fusible part that is heated and severed by the passage of overcurrent through it.” From this definition it can be seen that a fuse is intended to be responsive to current and provide protection against system overcurrent conditions. Modern fuses suitable for the range of voltages encountered on industrial power systems fall into two general categories: power fuses (over 600 V) and low-voltage fuses (under 600 V). Fuses have achieved widespread use on such systems because of their simplicity, economy, fast response characteristics, and freedom from maintenance.

--`,,`,,`-`-`,,`,,`,`,,`---
Copyright The Institute of Electrical and Electronics Engineers, Inc.
Provided by IHS under license with IEEE
No reproduction or networking permitted without license from IHS
Not for Resale

5.3.20.1 Power fuses (over 600 V)

Power fuses rated over 600 V are of four types: the distribution fuse-cutout type, the current-limiting type, the solid-material type, or the electronic type. Most fuses are available in designs that comply with E rating or R rating requirements, as defined in ANSI C37.46-1981 [B6], or K rating requirements, as defined in ANSI C37.42-1989 [B5]. Electronic fuses are very versatile power fuses and operate at a specific minimum pickup fault current which is selectable based on coordination requirements, rather than within E or K rating requirements.

5.3.20.1.1 Distribution fuse cutouts

This type of fuse is generally used in distribution system cutouts or disconnect switches. To interrupt a fault current, an arc-confining tube with a de-ionizing fiber liner and fusible element is employed. Arc interruption is accomplished by the rapid production of pressurized gases within the fuse tube, which extinguishes the arc by expulsion from the open end or ends of the fuse.

Enclosed, open, and open-link types of expulsion fuses are available for use as cutouts. Enclosed cutouts have terminals, fuse clips, and fuse holders mounted completely within an insulating enclosure. Open cutouts have these parts completely exposed. Open-link cutouts have no integral fuseholders, and the arc-confining tube is incorporated as part of the fuse link.

Since gases are released rapidly during the interruption process, the operation of expulsion-type fuses is comparatively noisy. They are rarely, if ever, applied in an enclosure because of the special care required to vent any ionized gases that might be released and that would cause a flashover between internal live parts. Fuse cutouts and disconnect switches are used indoors for the protection of industrial plant distribution systems and provide fault and overload protection of distribution feeder circuits, transformers, and capacitor-bank fault protection. They have an inverse time–current characteristic that is compatible with standard overcurrent relays.

5.3.20.1.2 Current-limiting power fuses

This type of fuse is designed so that the melting of the fuse element introduces a high arc resistance into the circuit in advance of the prospective peak current of the first half-cycle. If the fault-current magnitude is sufficiently high, the arc voltage that rapidly escalates will forcibly limit the current to a peak value that is lower than the prospective peak. This reduced peak value is referred to as the peak let-through current, which may be a small fraction of the peak current that would flow without the current-limiting action of the fuse. If the fault-current magnitude is not sufficiently high, current limitation will not be achieved.

A general-purpose current-limiting fuse is defined as a fuse capable of interrupting all currents from the rated maximum interrupting current down to the current that causes melting of the fusible element in one hour. This type of fuse is not intended to provide protection against low-magnitude overload currents, since it can reliably interrupt only currents above approximately twice its continuous rating for E-rated fuses and usually above approximately three

Copyright The Institute of Electrical and Electronics Engineers, Inc.
Provided by IHS under license with IEEE
No reproduction or networking permitted without license from IHS Not for Resale

times its continuous rating for non-E-rated fuses. Typical applications are for the protection of power transformers, potential transformers, and feeder circuits. A typical time–current characteristic for this type of fuse is shown in figure 5-14(a). Note that while fuses' nearly straight and vertical characteristic makes selective coordination with other fuses easy, they may be more difficult to coordinate with overcurrent relays.

Current-limiting fuses of the R-rated type are most commonly applied in motor starters utilizing contactors that are not capable of interrupting high magnitudes of fault current. The "R" designation is not related to the continuous-current rating, although each fuse does have a permissible continuous current that is published by the manufacturer. The R number is 1/100 of the amperes required to open the fuse in about 20 s. The fuse provides the necessary short-circuit protection, but must be used in combination with an overload protective device to sense lower values of overcurrent that are within the capability of the contractor. Fuses of this type are generally designed to interrupt currents that melt the fuse element in less than 100 s, but the fuse is not self-protecting on lower overcurrents.

The current-forcing action of current-limiting fuses during interruption produces transient overvoltage on the system, which may require the application of suitable surge-protective apparatus for proper control. The duty imposed on surge arresters can be relatively severe and should be carefully considered in selecting the equipment to be applied [B33].

Current-limiting power fuses are available in various frequency, voltage, continuous-current-carrying capacity, and interrupting ratings that conform to the requirements of IEEE Std C37.40-1981 [B39], IEEE Std C37.41-1988 [B40], ANSI C37.46-1981 [B6], and ANSI C37.47-1981 [B7].

5.3.20.1.3 Solid-material power fuses

This type of fuse utilizes densely molded solid boric-acid powder as the lining for the interrupting chamber. This solid-material lining liberates incombustible, highly de-ionized steam when subjected to the arc established by melting of the fusible element. Solid-material power fuses have higher interrupting capacities than fiber-lined power fuses of identical physical dimensions, produce less noise, need less clearance in the path of the exhaust gases and, importantly, can be applied with normal electrical clearance indoors or in enclosures when equipped with exhaust control devices. Exhaust control devices provide silent operation and contain all arc-interruption products. Indoor mountings with solid-material-type power fuses can be furnished with an integral hookstick-operated load-current interrupting device, thus providing single-pole live switching in addition to fault interrupting functions provided by the fuse. Many of these fuses also include an indicator that shows when the fuse has operated. These advantages, plus their availability in a wide range of current and interrupting ratings and time-current characteristics that conform to all applicable standards, have led to the wide use of solid-material power fuses in utility, industrial, and commercial power-distribution systems.

Copyright The Institute of Electrical and Electronics Engineers, Inc.
Provided by IHS under license with IEEE
No reproduction or networking permitted without license from IHS Not for Resale

5.3.20.1.4 Electronic power fuses

Recently, another type of power fuse, the electronic fuse, has been introduced. This latest technological development combines many of the features and benefits of power fuses and relays. Electronic fuses generally consist of two separate components: an electronic control module that provides the time–current characteristics and the energy to initiate tripping, and an interrupting module that interrupts current when an overcurrent occurs. These two modules, when joined together, are held in a suitable holder that fits in a mounting. A current transformer located within the control module powers the logic circuits employed in the control module which may have instantaneous tripping characteristics, time-delay tripping characteristics, or both. These two circuits may be used alone or in combination to provide a variety of time–current characteristics. When an overcurrent occurs, the control module triggers a high-speed gas generator that separates the main current path in the interrupting module, transferring the current into the current-interrupting ribbon elements, which then melts and burns back. Only the interrupting module is replaced following fuse operation.

Electronic power fuses are suitable for service-entrance protection and coordination of industrial and commercial distribution circuits because these fuses have high current-carrying capability and incorporate unique time–current characteristics designed for superior coordination with source-side overcurrent relays and load-side feeder fuses. They are ideally suited for load-feeder protection and coordination in industrial, commercial, and utility substations because of their high continuous and interrupting ratings. Specific time–current characteristics are available for primary-side protection of transformers and for application at the head of an underground loop system to provide backup protection for pad-mounted transformers containing fuses with a limited interrupting capability. Indoor mountings with electronic fuses can be furnished with an integral hookstick-operated load-current interrupting device, thus providing for single-pole live switching in addition to the fault interrupting functions provided by the fuse.

Some electronic fuses also include indicators that make it easy to determine which fuse has operated. A typical time–current characteristic curve for this type of fuse is shown in figure 5-14(b). Because this fuse is available with many unique time–current characteristics, it can easily coordinate both with line-side overcurrent relays and load-side power fuses.

5.3.20.2 Low-voltage fuses (600 V and below)

These fuses are covered by the following standards: NEMA FU 1-1986 [B70] and by the ANSI/UL 198 series [B14]–[B19].

Plug fuses are of three basic types, all rated 125 V or less to ground and up to 30 A maximum with an interrupting rating of 10 000 A. The three types are as follows:

a) Edison base with no time delay in which all ratings are interchangeable;
b) Edison base with a time delay and interchangeable ratings;
c) Type S base, available in three noninterchangeable current ranges: 0–15 A, 16–20 A, and 21–30 A.

Copyright The Institute of Electrical and Electronics Engineers, Inc.
Provided by IHS under license with IEEE
No reproduction or networking permitted without license from IHS Not for Resale

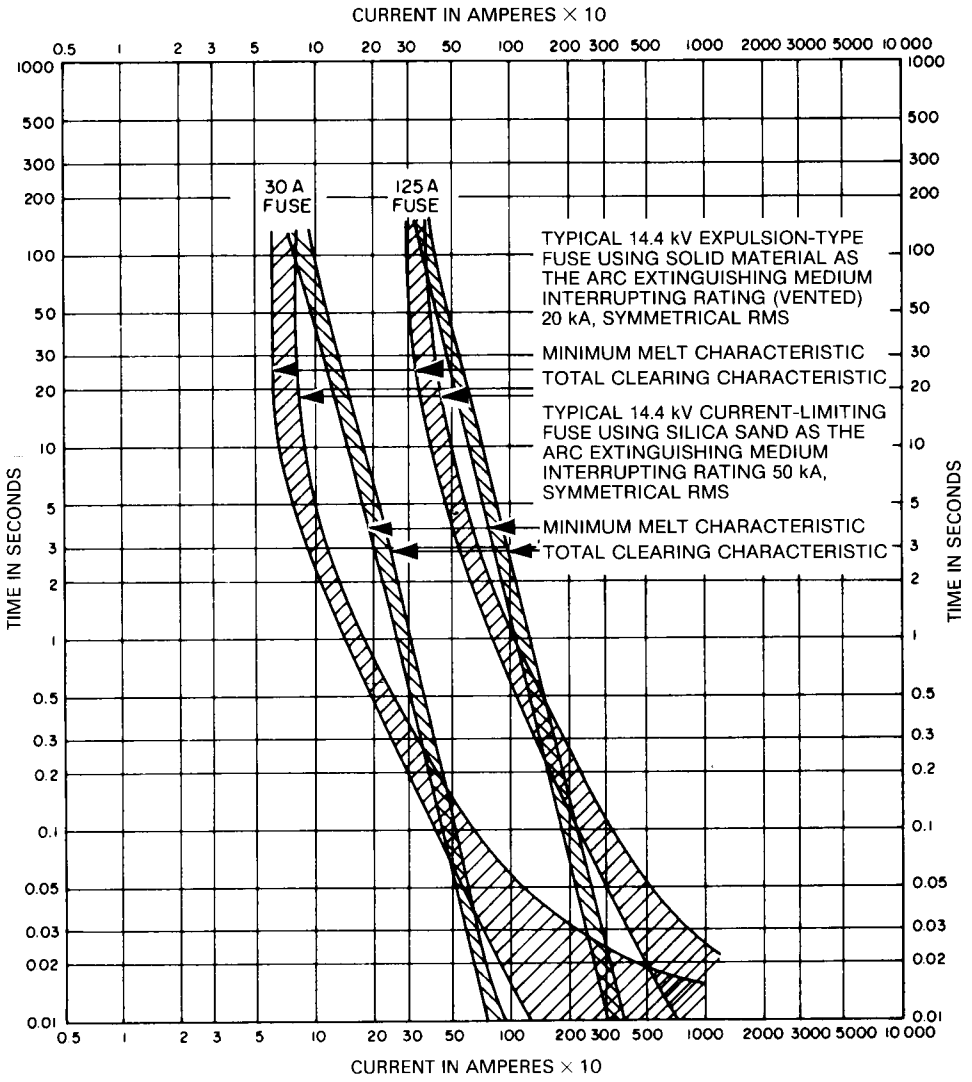

Figure 5-14 (a)—Time–current characteristic curves showing the difference between solid-material expulsion-type and current-limiting-type power fuses

Copyright The Institute of Electrical and Electronics Engineers, Inc.
Provided by IHS under license with IEEE
No reproduction or networking permitted without license from IHS
Not for Resale

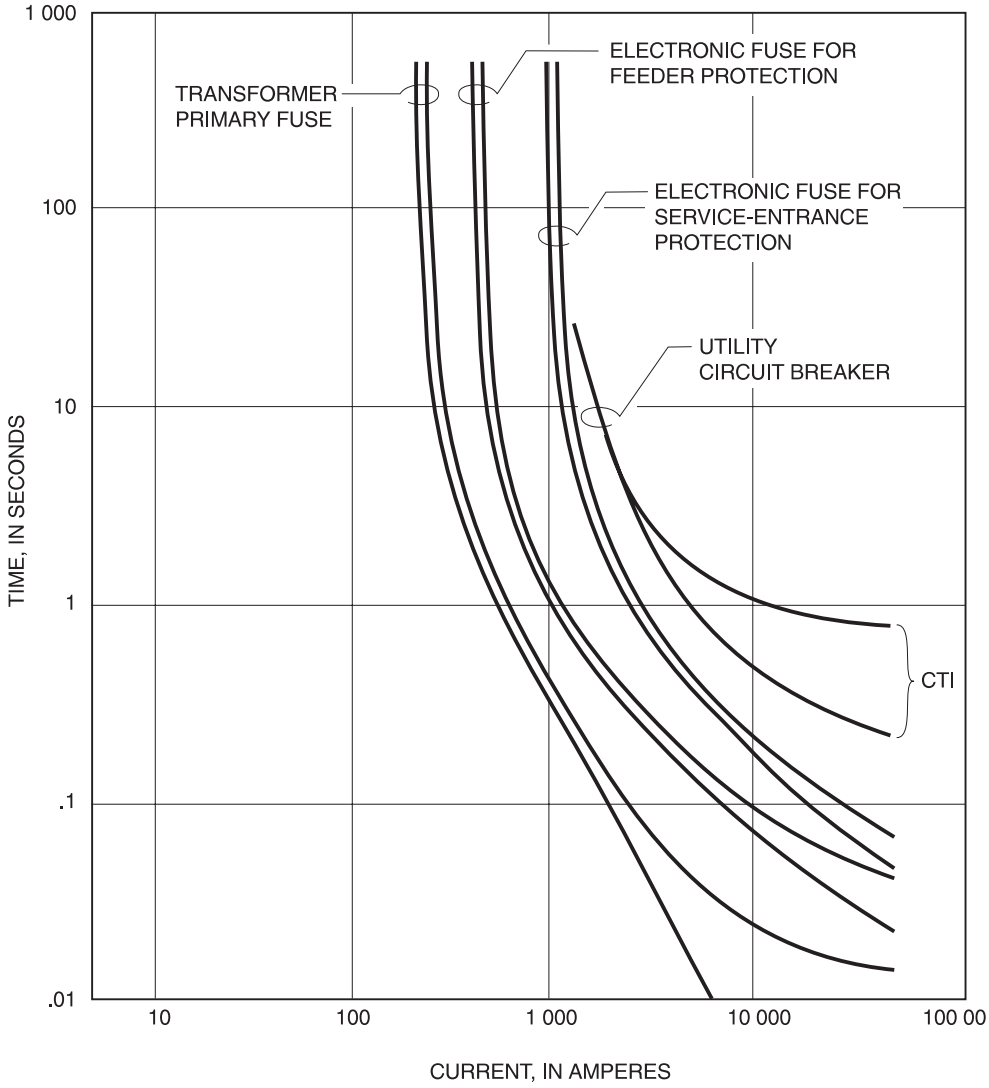

Figure 5-14 (b)—Time–current characteristic curves showing the ability of electronic fuses in a service-entrance application to coordinate with the upstream utility circuit breaker and downstream feeder fuses and transformer primary fuses

--`,,`-`-`,,`,,`,`,,`---

Copyright The Institute of Electrical and Electronics Engineers, Inc.
Provided by IHS under license with IEEE
No reproduction or networking permitted without license from IHS
Not for Resale

These last two types normally have a time-delay characteristic of at least 12 s at 200% of their rating, although time-delay plug fuses are no longer required by the NEC [B10].

Cartridge fuses may be either renewable or nonrenewable. Nonrenewable fuses are factory assembled and must be replaced after operating. Renewable fuses can be disassembled and the fusible element replaced. Renewable elements are usually designed to give a greater time delay than ordinary nonrenewable fuses, and in some designs the delay on moderate overcurrents is considerable. The renewable-type fuse is not available in ratings above 10 000 A.

a) *Noncurrent-limiting fuses (Class H).* These fuses interrupt overcurrents up to 10 000 A but do not limit the current that flows in the circuit to the same extent as do recognized current-limiting fuses. As a general rule, they should only be applied in circuits where the maximum available fault current is 10 000 A and the protected equipment is fully rated to withstand the peak available fault current associated with this fault duty, unless such fuses are specifically applied as part of an equipment combination that has been type-tested and designed for use at higher available fault current levels.

b) *Current-limiting fuses.* Current-limiting fuses are intended for use in circuits where available short-circuit current is beyond the withstand capability of downstream equipment or the interrupting rating of ordinary fuses or standard circuit breakers. An alternating current-limiting fuse is a fuse that safely interrupts all available currents within its interrupting rating and, within its current-limiting range, limits the clearing time at rated voltage to an interval equal to or less than the first major or symmetrical current loop duration, and limits peak let-through current to a value less than the peak current that would be possible with the fuse replaced with a solid conductor of the same impedance. A current-limiting fuse, therefore, places a definite ceiling on the peak let-through current and thermal energy, providing equipment protection against damage from excessive magnetic stresses and thermal energy (see applicable ANSI/UL 198 standards for maximum let-through limits).

   These fuses are widely used in motor starters, fused circuit breakers, fused switches of motors and feeder circuits for protection of busway and cable, and many other applications.

c) *Let-through considerations.* Figure 5-15 illustrates typical current-limiting fuse operating characteristics during a high-fault-current interruption. In applications involving high available fault currents, the operating characteristics of the current-limiting fuse limit the actual current that is allowed to flow through the circuit to a level substantially less than the prospective maximum. The peak let-through current of a current-limiting fuse is the instantaneous peak value of current through the fuse during fuse opening. The let-through I^2t of a fuse is a measure of the thermal energy developed throughout the entire circuit during clearing of the fault. Both values are important in evaluating fuse performance and can be determined from peak let-through and I^2t curves supplied by the fuse manufacturer. A let-through current value considerably less than the available fault current will greatly reduce the magnetic stresses (which are proportional to the square of the current) and thus reduce fault damage in protected equipment. In some cases it becomes possible to use components (that is, motor starters, disconnect switches, circuit breakers, and bus duct) in the system that

Copyright The Institute of Electrical and Electronics Engineers, Inc.
Provided by IHS under license with IEEE
No reproduction or networking permitted without license from IHS Not for Resale

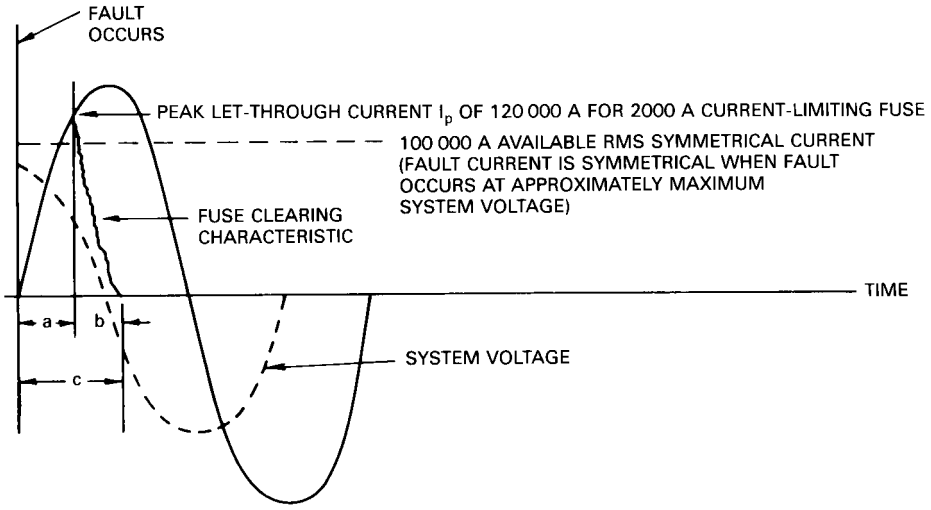

(a) Fault occurring at peak voltage

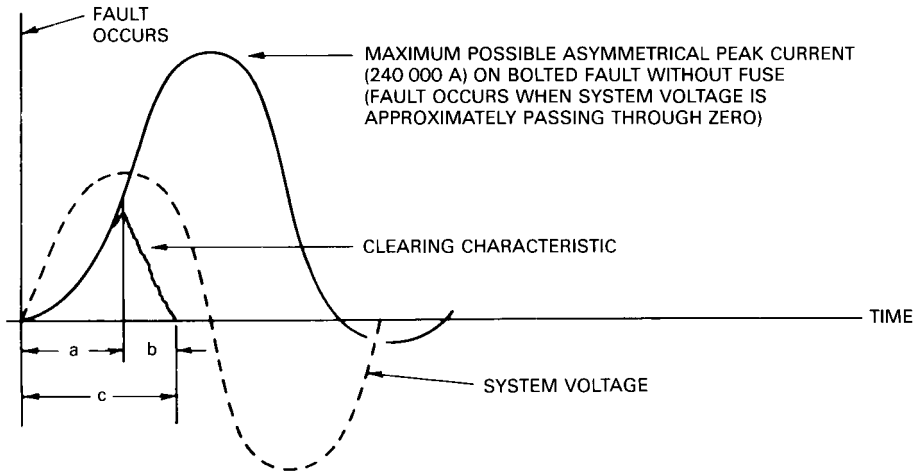

(b) Fault occurring at zero voltage

a — Melting Time
b — Arcing Time
c — Total Clearing Time

Figure 5-15—Typical current-limitation characteristics showing peak let-through and maximum prospective fault current as a function of the time of fault occurrence (100 kA available rms symmetrical current)

Copyright The Institute of Electrical and Electronics Engineers, Inc.
Provided by IHS under license with IEEE
No reproduction or networking permitted without license from IHS Not for Resale

have fault capabilities much less than the maximum fault current available. The low peak let-through current and I^2t levels can be achieved with current-limiting fuses because of their extremely fast (often less than one quarter-cycle) speed of response when subjected to high-fault current. The speed of response is governed by fuse design. For highest speed, silver links with special configurations surrounded by quartz sand are used.

Peak let-through current values alone cannot determine the comparable effectiveness of current-limiting fuses. The product of the total clearing time and the effective value of the let-through current squared I^2t, or thermal energy, should be considered as well.

The melting I^2t of a fuse does not vary with voltage. However, arcing I^2t is voltage-dependent and the arcing I^2t at 480 V, for example, will not be as great as that at 600 V.

d) *Dual-element or time-delay fuses*. A dual-element fuse has current-responsive elements of two different fusing characteristics in series in a single cartridge. The fuse is one-time in operation, and the fast-acting element responds to overcurrents that are in the short-circuit range. The time-delay element permits short-duration overloads, but melts if these overloads are sustained. The most important application for these fuses is motor and transformer protection. They do not open on motor starting or transformer magnetizing inrush currents, but still protect the motor and branch circuits from damage by sustained overloads.

e) *Fuse standards (cartridge)*. Cartridge fuses differ in dimensions according to voltage and current ratings. They have ferrule contacts in ratings of 60 A or less and knife-blade contacts in larger ratings. Cartridge fuses of varying types and characteristics have been classified by the ANSI/UL 198 series [B14]–[B19] into the following classes:

1) *Miscellaneous cartridge fuses*. These fuses are not intended for use in branch circuits but rather for use in control circuits, special electronic or automotive equipment, etc. To be industry-listed they must not be manufactured in the same dimensions as UL classes G, H, J, K, CC, T, or L. They have ratings of 125, 250, 300, 500, and 600 V, and are applied in accordance with the NEC [B10].

2) *Class H fuses*. These fuses may be renewable or nonrenewable and are generally of copper or zinc link construction. They are rated and sized up to 600 A at either 250 V or less or 600 V or less. They may or may not be of dual-element construction, but if labeled as time-delay they must have a minimum delay of 10 s at 500% of rating except that a 250 V fuse rated 30 A or less must have a minimum delay of 8 s. These fuses have an interrupting rating of 10 000 A and must only be used where fault currents do not exceed this magnitude. Class H fuses are often referred to as NEC fuses, and the nonrenewable class H fuse is sometimes referred to as a one-time fuse, although this may describe other fuse types as well. Renewable fuses are losing popularity because of their limited interrupting ability and the dangers of double-linking or insecurely fastening renewal links.

3) *Class K high-interrupting-rating fuses*. These fuses are manufactured in identical physical sizes as class H fuses, with which they are interchangeable and,

Copyright The Institute of Electrical and Electronics Engineers, Inc.
Provided by IHS under license with IEEE
No reproduction or networking permitted without license from IHS
Not for Resale

therefore, cannot be labeled with the words *current-limiting*. However, they have been tested at various high available fault-current levels up to their maximum labeled ratings, which may be either 50 000, 100 000, or 200 000 A rms. Thus, fuses in this class are referred to as high-interrupting-rating fuses. Class K fuses must meet specified maximum values of instantaneous peak let-through currents and I^2t energy let-through maximum values for each physical case size. Each fuse label bears the ac interrupting rating, the class and subclass and, if the fuse meets the time-delay requirement of at least 10 s (or 8 s for a 250 V fuse rated 30 A or less) at 500% rating, it may be labeled as time-delay or with the letter D. According to ANSI/UL 198D-1987 [B16], class K fuses are available in three distinct subclasses identified as class K1, class K5, and class K9. Class K1 fuses have the lowest maximum values for peak let-through currents and I^2t, class K9 have the highest maximum values, and the class K5 values are between the K1 and K9 values. Most earlier class K9 types have been modified and now have class K5 characteristics.

4) *Class R current-limiting fuses*. These fuses are a nonrenewable cartridge-type current-limiting fuse also manufactured to class H dimensional standards and have a 200 000 A rms symmetrical interrupting rating. The R designator signifies the fact that the fuse is built with a rejection feature that consists of grooves or notches provided in either the fuse ferrule or blade, depending on the size involved. Equipment rated and approved only for use with fuses having the current-limiting characteristics of class R fuses is then provided with fuse attachment hardware that will only permit the installation of the notched fuses. Since this rejection feature eliminates the possibility of interchanging a current-limiting fuse with a noncurrent-limiting fuse, the class R fuses are labeled with the words, current-limiting. These class R fuses are available in either the single- or dual-element construction. The fuses are available in two subclasses identified as RK1 and RK5, which denote the fact that the fuses have let-through characteristics corresponding to class K1 and K5 fuses, respectively. Since equipment that is approved for class R service is always rated to withstand the higher let-through current of RK5 fuses, either the RK1 or the RK5 fuse can be safely applied. Some fuses in this rating class listed with interrupting ratings up to 300 000 A are designated as *special purpose fuses*.

5) *Class J current-limiting fuses*. These fuses are manufactured in ratings up to 600 A and in specified dimensions per ANSI/UL 198C-1986 [B15], which are non-interchangeable with class H and class K fuses. They are labeled as current-limiting. There is no 250 V or less rating; all are labeled 600 V or less and may be used only in fuseholders of suitable class J dimensions. Each case size has specified maximum values of peak let-through current values and maximum thermal (I^2t) values. Fuses having a time-delay characteristic are available in class J dimensional sizes. UL-listed class J fuses with time delay are available from several manufacturers. Class J fuses have a 200 000 A rms interrupting rating. Some fuses in this rating class with interrupting ratings up to 300 000 A are designated as *special purpose fuses*.

6) *Class L current-limiting fuses*. These are the only UL-labeled fuses available with current ratings in excess of 600 A. Per ANSI/UL 198C-1986 [B15], their

Copyright The Institute of Electrical and Electronics Engineers, Inc.
Provided by IHS under license with IEEE
No reproduction or networking permitted without license from IHS Not for Resale

ratings range from 601 to 6000 A rms, all at 600 V or less. There is no 250 V size. Class L fuses have an interrupting rating of 200 000 A rms. Like class J fuses, each case size or mounting dimension (mounting holes drilled in the blades) has a maximum allowable peak let-through current and I^2t value. Some fuses in this rating class listed with interrupting ratings up to 300 000 A are designated as *special purpose fuses*.

A fuse should be selected for voltage, current-carrying capacity, and interrupting rating. When fuses must be coordinated with other fuses or circuit breakers, the time–current characteristic curves, peak let-through curves, and I^2t curves may be useful. The load characteristics will dictate the time-delay performance required of the fuse. If fuses are applied in series in a circuit, it is essential for selectivity during short circuits to verify that the clearing I^2t of the load-side fuse during a fault will be less than the melting I^2t of the line-side fuse. Fuse manufacturers publish fuse-ratio tables that provide listings of fuses that are known to operate selectively. Use of these tables permits coordination without the need for detailed analysis, provided the fuses being applied are all of the same manufacturer.

5.3.20.3 Fuse-selection considerations

For each fuse classification rated 600 V and below, the corresponding UL standards specify the following design features that are particularly important to fuse application: current rating, voltage rating, frequency rating, interrupting rating, maximum peak let-through current, and maximum clearing thermal energy, I^2t. Standards also specify maximum opening times at certain overload values, such as 135 and 200% of rating, and for time-delay qualification, minimum opening time at a specific overload percentage. Within these parameters and from various other overcurrent test data, manufacturers construct time–current curves. Normally such curves are based on available rms currents 0.01 s and above, and on either the average melting, minimum melting, or total clearing time. Caution should be exercised in the use of such curves to be certain that equivalent characteristics are being compared.

When coordinating a line-side circuit breaker with a load-side fuse, the let-through energy of the fuse (clearing I^2t) must be less than the required amount to release the circuit breaker trip latch mechanism. This is not easily accomplished with many types of circuit breakers. Critical operation occurs in the region for currents greater than the circuit breaker instantaneous trip device pickup for periods of time less than 0.01 s, even though a normal time-current plot would suggest that selective performance exists. Similar problems exist when attempting to coordinate a load-side circuit breaker with a line-side fuse. The clearing time of the circuit breaker can often exceed the minimum melting time of the fuse. Overload coordination for low-magnitude or moderate faults can be established with standard time–current curve overlays (for details, see IEEE Std 242-1986 [B57]. Thus, it may be impossible to selectively coordinate current-limiting fuses and circuit breakers at all current levels up to the maximum short-circuit currents.

For protection of a circuit breaker with a line-side fuse during high-fault currents, UL now series-tests and issues various combinations of fuses and circuit breakers as submitted by different manufacturers. These recognized combinations are preferable to manufacturers' data without third-party certification, where available.

Copyright The Institute of Electrical and Electronics Engineers, Inc.
Provided by IHS under license with IEEE
No reproduction or networking permitted without license from IHS
Not for Resale

The proper selection of a fuse to protect a starter, busway, or cable circuit will generally prevent their failure during a through-fault condition. It is the design engineer's responsibility to review the current-limiting fuse let-through current for selection of withstand ratings of equipment that has not been tested for a specific class and maximum size of fuse. The voltage rating of a fuse should be selected as equal to or higher than the nominal system voltage on which it is used. A low-voltage fuse of any labeled voltage rating will always perform satisfactorily on lower service voltages.

The current rating of a fuse should be selected so that it clears only on a fault or an overload and not on current inrush. Ambient temperatures and types of enclosures affect fuse performance and should be considered. Fuse manufacturers should be requested to supply correction factors for unusual ambient temperatures.

When applying a current-limiting fuse of a given voltage rating over 600 V on a circuit of a lower voltage rating, consideration should be given to the magnitude and effect of overvoltages that will be induced due to the zero current forcing action of the fuse during the interruption of high-magnitude fault currents.

5.4 Performance limitations

5.4.1 Load current and voltage wave shape

The published operating characteristics of all protective relays and trip devices are based on an essentially pure sinusoidal wave-shape of current and voltage. Many industrial loads are of such a nature as to produce harmonics in the system current and voltage. This condition is aggravated by the presence of any distribution equipment in the system with nonlinear electrical characteristics. As a result, it is important to understand the nature of the expected system current and voltage as well as the effect that wave-shape distortion might have on the protective devices being applied [B34].

5.4.2 Instrument transformers [B57], [B82]

If a protective relay is to operate predictably and reliably, it must receive information that accurately represents conditions that exist on the power system from the circuit instrument transformers. Since current and potential transformers become significantly nonlinear devices under certain conditions, they may not produce an output precisely representative of power system conditions either in wave shape or magnitude. The exact extent of any distortion is a function of the input signal level and transformer burden (total connected impedance) as well as the actual design (accuracy class) of the instrument transformer being applied. Potential transformer performance characteristics are classified by IEEE Std C57.13-1990 [B48]. This same standard provides separate classifications for current transformers with regard to burden capability and accuracy for both metering and relaying service. The burden and output requirements of all instrument transformers should be carefully checked against their rating for any relay application to verify that proper relay operation will result. In some cases where a larger burden is encountered or the expected level of fault current is higher than that encompassed by the IEEE Std C57.13-1990 rating structure, it may be necessary to obtain the cur-

Copyright The Institute of Electrical and Electronics Engineers, Inc.
Provided by IHS under license with IEEE
No reproduction or networking permitted without license from IHS Not for Resale

rent transformer saturation curve from the manufacturer in order to analytically establish acceptable performance.

5.5 Principles of protective relay application [B23], [B43], [B65]

Fault-protection relaying can be classified into two groups: primary relaying, which should function first in removing faulted equipment from the system, and backup relaying, which functions only when primary relaying fails.

To illustrate the areas of protection associated with primary relaying, figure 5-16 shows the various areas, together with circuit breakers, that feed each electric element of the system. Note that it is possible to disconnect any piece of faulted equipment by opening one or more circuit breakers. For example, when a fault occurs on the incoming line L_1, the fault is within a specific area of protection (area A) and should be cleared by the primary relays that operate circuit breakers 1 and 2. Likewise, a fault on bus 1 is within a specific area of protection, area B, and should be cleared by the primary relaying actuating circuit breakers 2, 3, and 4. If circuit breaker 2 fails to open and the faulted equipment remains connected to the system, the backup protection provided by circuit breaker 1 and its relays must be depended upon to clear the fault.

Figure 5-16 illustrates the basic principles of primary relaying in which separate areas of protection are established around each system element so that each can be isolated by a separate interrupting device. Any equipment failure occurring within a given area will cause tripping of all circuit breakers supplying power to that area.

To assure that all faults within a given zone will operate the relays of that zone, the current transformers associated with that zone should be placed on the line side of each circuit breaker so that the circuit breaker itself is a part of two adjacent zones. This is known as overlapping. Sometimes it is necessary to locate both sets of current transformers on the same side of the circuit breaker. In radial circuits the consequences of this lack of overlap are not usually very serious. For example, a fault at X on the load side of circuit breaker 3 in figure 5-16 could be cleared by the opening of circuit breaker 3 if there were any way to cause it to open circuit breaker 3. Since the fault is between the circuit breaker and the current transformers, the relays of circuit breaker 3 will not see it, and circuit breaker 2 will have to open and consequently interrupt the other load on the bus. When the current transformers are located immediately at the load bushings of the circuit breaker, the amount of circuit exposed to this problem is minimized. The consequences of lack of overlap become more serious in the case of tie circuit breakers between differentially protected buses and bus feeders protected by differential or pilot-wire relaying.

In applying relays to industrial systems, safety, simplicity, reliability, maintenance, and the degree of selectivity required should be considered. Before attempting to design a protective relaying plan, the various elements that make up the distribution system, together with the operating requirements, should be examined.

Copyright The Institute of Electrical and Electronics Engineers, Inc.
Provided by IHS under license with IEEE
No reproduction or networking permitted without license from IHS
Not for Resale

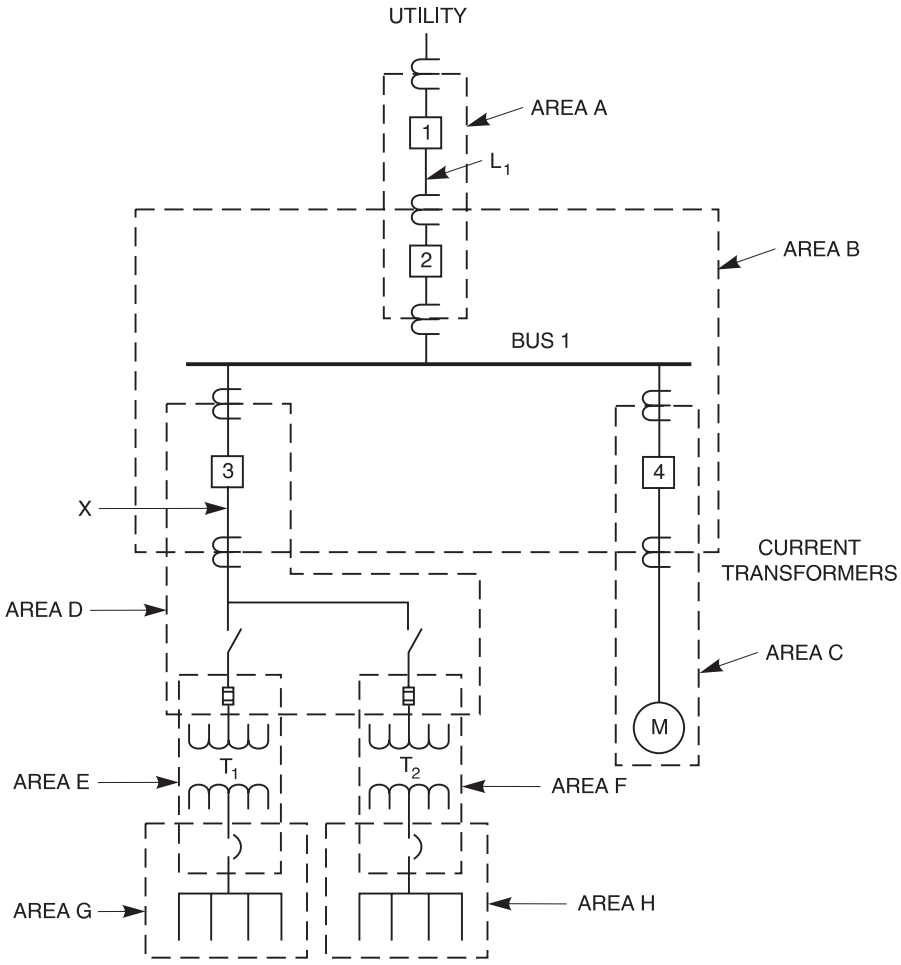

Figure 5-16—One-line diagram illustrating zones of protection

5.5.1 Typical small-plant relay systems

One of the simplest industrial power systems consists of a single service entrance circuit breaker and one distribution transformer stepping the utility's primary distribution voltage down to utilization voltage, as illustrated in figure 5-17. There would undoubtedly be several circuits on the secondary side of the transformer, protected by either circuit breakers or combination fused switches.

Protection for the feeder circuit between the incoming line and the devices on the transformer secondary would normally consist of conventional overcurrent relays, Devices 50/51. Preferably, the relays should have the same time–current characteristics as the relays on the utility system, so that for all values of fault current the local service entrance circuit breaker can be

Copyright The Institute of Electrical and Electronics Engineers, Inc.
Provided by IHS under license with IEEE
No reproduction or networking permitted without license from IHS
Not for Resale

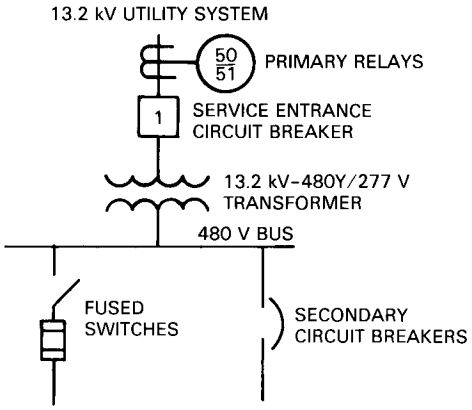

Figure 5-17—Typical small industrial system

programmed to trip before the utility supply line circuit breaker. The phase relays should also have instantaneous elements, Device 50, to promptly clear high-current faults.

This simple system provides both primary and backup relay protection. For instance, a fault on a secondary feeder should be cleared by the secondary protective device; however, if this device should fail to trip, the primary relays will trip circuit breaker1. Where the secondary voltage is 600 V or less, local code authorities may require a main secondary device to be installed to protect the incoming conductors and provide back-up protection to the feeder protective devices. This simple industrial system can be expanded by tapping the primary feeder and providing fuse protection on the primary of each distribution transformer, as shown in figure 5-18.

This provides an additional step or area of protection over the simpler system shown in figure 5-17. All secondary feeder faults should be cleared by the secondary overcurrent devices as before, while faults within the transformer should now be cleared by the transformer primary fuses. The fuses may also act as backup protection for the faults that are not cleared by the secondary feeder overcurrent devices. Primary feeder faults will, as before, be cleared by circuit breaker 1, and it, in turn, will act as backup protection for the transformer primary fuses.

5.5.2 Protective relaying for a large industrial plant power system [B63], [B80], [B81]

As an electric system becomes larger, the number of sequential steps of relaying also increases, giving rise to the need for a protective relaying scheme that is inherently selective within each zone of protection. Figure 5-19 shows the main connections of a large system.

Copyright The Institute of Electrical and Electronics Engineers, Inc.
Provided by IHS under license with IEEE
No reproduction or networking permitted without license from IHS Not for Resale

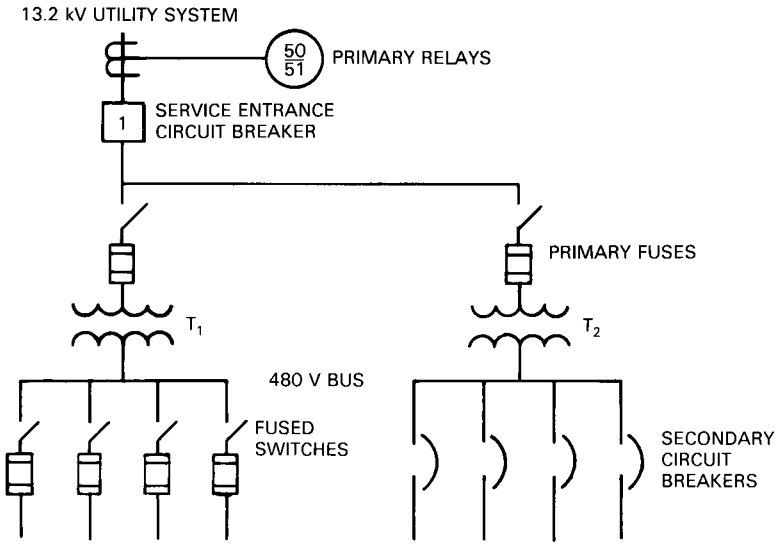

Figure 5-18—System of figure 5-17 expanded by addition of a transformer and associated secondary circuits

5.5.2.1 Primary protection

The relay selectivity problem is of great concern to the utilities because their 69 kV supply lines are paralleled and their transformers are connected in parallel with the plant's local generation. The utility company should participate in the selection of relays applied for operation of either incoming circuit breaker in case of a disturbance in the 69 kV bus or transformers. Due to the 69 kV bus tie, a fault in either a bus or a transformer cannot be cleared by the opening of circuit breaker A or B alone, but will require the opening of circuit breakers A or B as well as AB and C or D.

When 69 kV tie breaker is open and a fault occurs on utility line 1, fault current will flow from line 2 back through the two industrial supply transformers. Three overcurrent relays having inverse-time characteristics should be installed at circuit breaker positions A and B as backup protection for faults that may occur on or immediately adjacent to the 69 kV buses. The connection of these overcurrent relays (Devices 50/51), shown in figure 5-19 as being energized from the output of two current transformers in a summation connection at the incoming 69 kV lines and bus tie, provides the advantage of isolating only the faulted bus section in a shorter time than would be possible if individual circuit breaker relays were used. This is commonly called a partial differential scheme.

Three directionally controlled overcurrent relays (Device 67) should be installed for circuit breakers C and D and connected to trip for current flow toward the respective 69 kV transformer. Directionally controlled overcurrent relays are ideal for interrupting this current, since their sensitivity is not limited by the magnitude of load current in the normal or nontrip direction.

Copyright The Institute of Electrical and Electronics Engineers, Inc.
Provided by IHS under license with IEEE
No reproduction or networking permitted without license from IHS Not for Resale

The next zones of protection are the 13.8 kV buses 1 and 2. Fault currents are relatively high for any equipment failure on or near the main 13.8 kV buses. For this reason a differential protective relay scheme (Device 87B) is recommended for each bus. Differential relaying is instantaneous in operation and is inherently selective within itself. Without such relaying, high-current bus faults should be cleared by proper operation of overcurrent devices on the several sources. This usually results in long-time clearing since the overcurrent devices have pickup and time settings determined by other than bus fault considerations. General practice is to use separate current transformers with the same ratio and output characteristics for the differential relay scheme. A multicontact auxiliary relay (Device 86B) is used with the differential relays to trip all the circuit breakers connected to the bus whenever a bus fault occurs. To realize maximum sensitivity, the time-delay ground relays (Device 51N) at the 69–13.8 kV source transformers are connected to the output of current transformers measuring the current in the neutral connection to ground. The 87TN relay is differentially connected to provide sensitive tripping on faults between the transformer secondary and the 13.8 kV main circuit breaker. Auxiliary current transformers will normally be required to provide equal currents to the relay. Unlike the time-delay relays 51N-1 and 51N-2, this relay does not have to be set to be selective with other downstream ground-fault relays. Selective tripping of breakers C and D is achieved by the use of the partial differential relays scheme (Device 51).

Superior protection for the cable tie between buses 2 and 3 is provided by pilot-wire differential relays (Device 87L). In addition to being instantaneous in operation, pilot-wire schemes are inherently selective within themselves and require only two pilot wires if the proper relays are used. Backup protection provided by overcurrent relays should be installed at both ends of the tie line. Nondirectional relays can be applied at circuit breaker M, but at circuit breaker N directional relays are more advantageous since the 10 MVA generator represents a fault source at bus 3.

Separate current transformers are used for the pilot-wire differential relaying to provide reliability and flexibility in the application of other protective devices.

The 9000 hp 13.8 kV synchronous motor is provided with a reactor-type reduced-voltage starting arrangement using metal-clad switchgear. Overload protection is provided by a thermal relay (Device 49) whose sensor is a resistance temperature detector (RTD) imbedded in the stator windings. This relay can be used to either trip or alarm. Internal fault protection is provided by the differential relay scheme (Device 87M). Backup fault protection and locked-rotor protection is provided by an overcurrent relay (Device 51/50) applied in all three phases. Undervoltage and reverse-phase rotation protection are provided by the voltage-sensitive relay (Device 47) connected to the main bus potential transformers.

Ground-fault protection is provided by the instantaneous zero-sequence current relay (Device 50GS). The current-balance relay (Device 46) protects the motor against damage from excessive rotor heating caused by single phasing or another unbalanced voltage condition.

The motor rotor starting winding can be damaged by excessive current due to loss of excitation or suddenly applied loads, which cause the motor to pull out of step. Rotor damage could also result from excessive time for the motor to reach synchronous speed and lock into step.

Copyright The Institute of Electrical and Electronics Engineers, Inc.
Provided by IHS under license with IEEE
No reproduction or networking permitted without license from IHS
Not for Resale

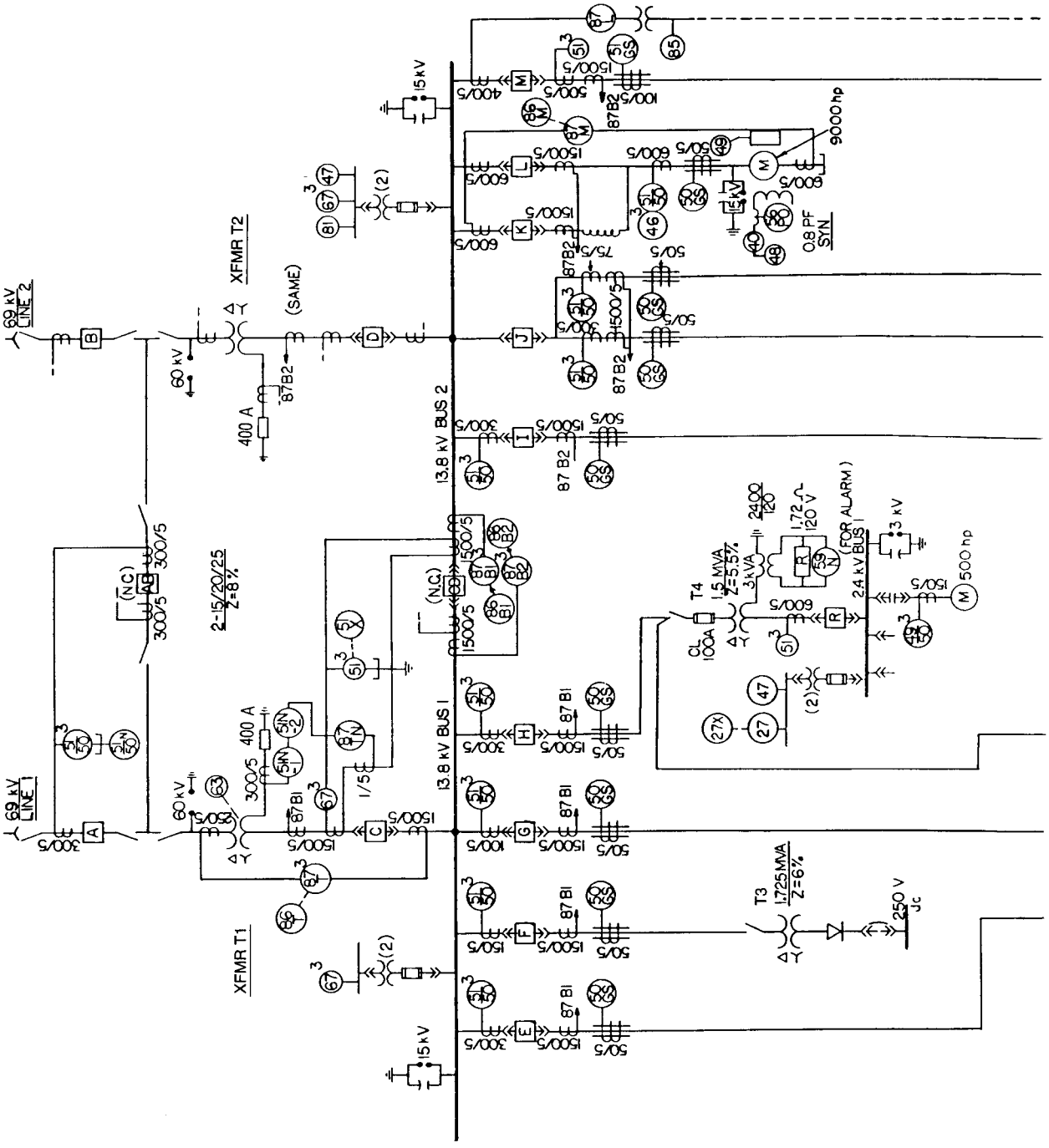

Copyright The Institute of Electrical and Electronics Engineers, Inc.
Provided by IHS under license with IEEE
No reproduction or networking permitted without license from IHS
Not for Resale

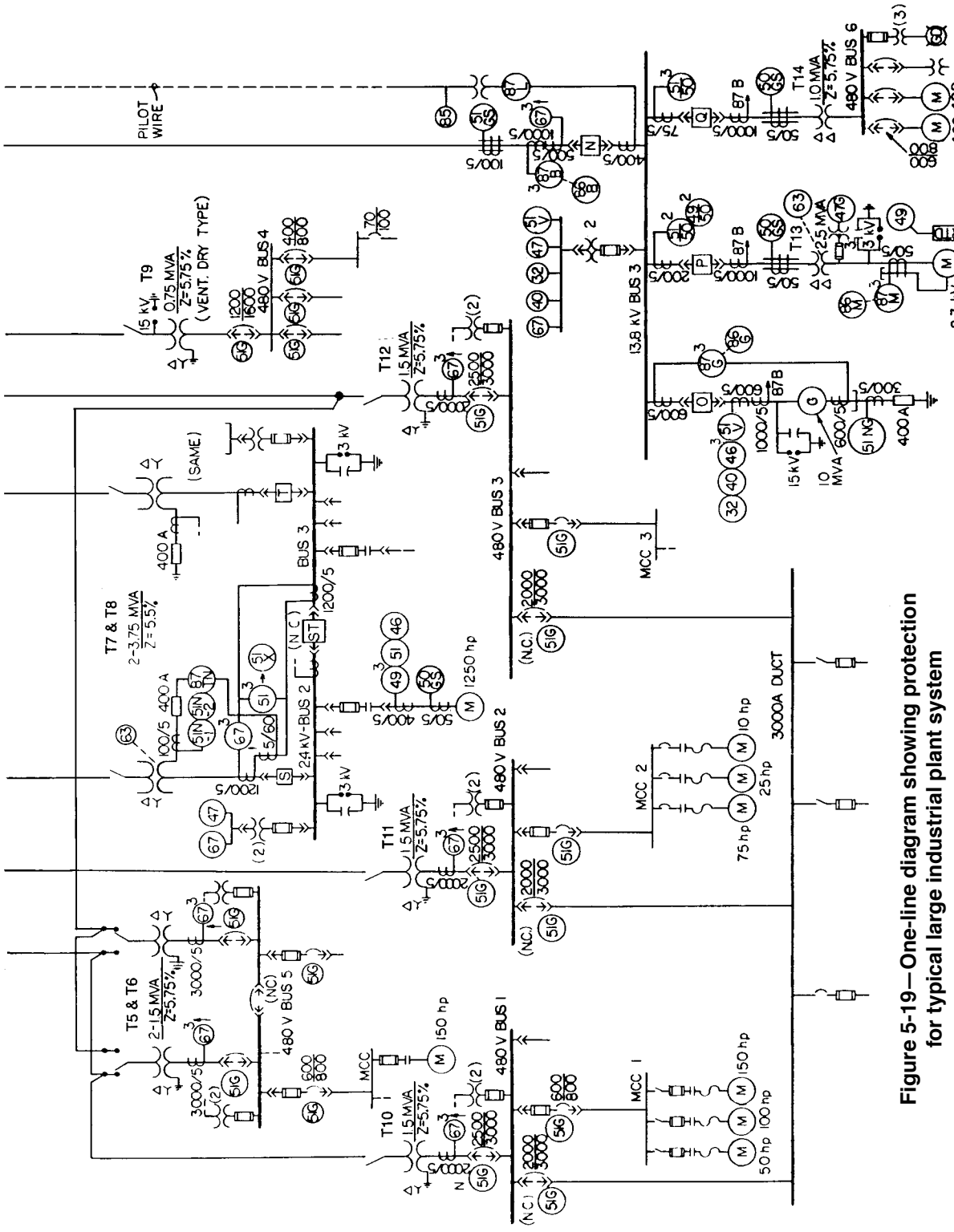

Figure 5-19—One-line diagram showing protection for typical large industrial plant system

Copyright The Institute of Electrical and Electronics Engineers, Inc.
Provided by IHS under license with IEEE
No reproduction or networking permitted without license from IHS
Not for Resale

Protective device legend for Figure 5-19

Location	Device	Description
69 kV supply lines	51/50 51N/50N	Summation phase and ground overcurrent protection for 69 kV bus and backup for transformer differential relaying. Trips circuit-breakers A, AB, and C through auxiliary relay 86T.
15 MVA main transformers	51N-1 51N-2	Backup ground-fault protection for transformer secondary 13.8 kV bus and feeder circuits. 51N-1 trips tie circuit breaker CD; 51N-2 (after time interval) trips circuit breaker.
	63	Sudden pressure relay. Trips circuit breakers A, AB, and C through auxiliary relay 86T.
	67	Directional phase overcurrent as backup to transformer differential. Trips circuit breakers A, AB, and C through auxiliary relay 86T.
	87TN	Sensitive differential protection for ground faults in transformer secondary. Trips circuit breakers A, AB, and C through auxiliary relay 86T.
	87T	Transformer differential protection. Trips circuit breakers A, AB, and C through auxiliary relay 86T.
	86T	Auxiliary trip and lockout relay.
13.8 kV buses 1 and 2	51	Summation phase overcurrent protection as backup for 13.8 kV bus and feeder faults. Trips circuit breakers C and CD through auxiliary relay 51X.
	87B1 87B2	Bus differential. 87B1 trips circuit breakers C, CD, E, F, G, and H through auxiliary relay 86B1. 87B2 trips circuit breakers D, CD, I, J, K, L, and M through auxiliary relay 86B2.
	86B1 86B2	Auxiliary trip and lockout relay.
	81	Underfrequency protection. Initiates load shedding by tripping preselected feeder circuits.
13.8 kV feeders E, F, G, H, I, and J	51/50	Time and instantaneous phase-fault protection. Trips individual feeder circuit breaker.
	50GS	Instantaneous ground-fault protection. Trips individual feeder circuit breaker.
13.8 kV motor control circuit breakers K and L	40 48 56PO	Loss of excitation, incomplete sequence checking and pullout protective relays. Trips circuit breakers K and L.
	46	Current balance relay for single-phase protectection. Trips circuit breakers K and L.
	47	Polyphase undervoltage and phase reversal protection. Trips circuit breakers K and L through auxiliary relay 86M.
	49	Overload protection using stator resistance temperature detector. Trips circuit breakers K and L through auxiliary relay 86M.
	50GS	Instantaneous ground-fault protection. Trips circuit breakers K and L through auxiliary relay 86M.
	51/50	Phase overcurrent protection and locked rotor protection. Trips circuit breakers K and L through auxiliary relay 86M.

Copyright The Institute of Electrical and Electronics Engineers, Inc.
Provided by IHS under license with IEEE
No reproduction or networking permitted without license from IHS
Not for Resale

Protective device legend for Figure 5-19 (continued)

Location	Device	Description
13.8 kV motor control circuit breakers K and L (cont'd)	87M	Motor differential protection. Trips circuit breakers K and L through auxiliary relay 86M.
	86M	Auxiliary trip and lockout relay.
13.8 kV tie line circuit breaker M	51GS	Sensitive ground-fault protection as backup to pilot-wire relaying and backup for bus and feeder ground faults at 13.8 kV bus 3. Trips circuit breaker M.
	51	Phase overcurrent protection as backup to pilot-wire relaying and backup for bus and feeder faults at 13.8 kV buses. Trips circuit breaker M.
	87L	Line differential protection for phase and ground faults using pilot wire. Trips circuit breaker M.
	85	Pilot wire monitoring relay to alarm for open, short-circuited, or grounded pilot wire.
3.75 MVA transformer and 2.4 kV buses 2 and 3	51	Summation phase overcurrent protection for 2.4 kV bus faults and backup protection for feeder faults. Trips circuit breakers S and ST through auxiliary relay 51X.
	51N-1 51N-2	Ground-fault protection for transformer secondary and bus and backup for feeder ground faults. 51N-1 trips tie circuit breaker ST; 51N-2 (after time interval) trips circuit breaker S.
	63	Sudden pressure relay on transformer. Trips circuit breakers S and H.
	67	Directional phase overcurrent protection for transformer faults and 13.8 kV line faults. Trips circuit breaker S.
	87TN	Sensitive differential protection for ground faults in transformer secondary. Trips circuit breakers S and H.
	46	Current balance relay for single-phase protection. Trips contactor.
	47	Polyphase undervoltage and phase sequence protection. Trips circuit breakers S and ST through auxiliary relay 51X.
	49	Replica-type thermal overload protection. Trips contactor.
	50GS	Instantaneous ground-fault protection. Trips contactor.
	51	Overcurrent relay for motor locked rotor protection. Trips contactor.
1.5 MVA transformer and 2.4 kV bus 1	49/50	Replica-type thermal overload protection including instantaneous element for short-circuit protection. Trips contactor.
	51	Phase overcurrent protection. Trips circuit breaker R.
	59N	Sensitive voltage detection of ground faults for high-resistance grounded system. Initiates alarm signal.
	27	Single-phase undervoltage protection. Trips motor contactor through auxiliary relay 27X.
	47	Negative sequence voltage relay detects single phasing of source. De-energizes undervoltage relay 27.

Copyright The Institute of Electrical and Electronics Engineers, Inc.
Provided by IHS under license with IEEE
No reproduction or networking permitted without license from IHS
Not for Resale

Protective device legend for Figure 5-19 (continued)

Location	Device	Description
13.8 kV tie line, circuit breaker N at 13.8 kV bus 3	67	Directional phase overcurrent protection as backup to pilot wire and backup for bus and feeder faults at 13.8 kV buses. Trips circuit breaker N.
	87L	Line differential protection for phase and ground faults using pilot wire. Trips circuit breaker N.
	85	Pilot-wire monitoring relay to initiate alarm for open, short-circuited, or grounded pilot wire.
	51G	Sensitive ground-fault protection as backup to pilot-wire relaying and backup for bus and feeder faults at 13.8 kV buses. Trips circuit breaker N.
13.8 kV bus 3	87B	Bus differential. Trips circuit breakers N, O, P, and Q through auxiliary relay 86B.
	86B	Auxiliary trip and lockout relay.
10 MVA generator	32	Reverse power or antimotoring protection. Trips circuit breaker O.
	40	Loss of excitation protection. Alarm and subsequent trip of circuit breaker O.
	46	Negative-sequence overcurrent protection for generator due to external unbalanced fault. Trips circuit breaker O.
	51V	Backup overcurrent protection for external three-phase faults. Trips circuit breaker O.
	51NG	Ground-fault protection for generator and backup for differential relays and feeder ground relays. Trips circuit breaker O and field circuit breaker through 86G.
	87G	Generator differential protection. Trips circuit breaker O and field circuit breaker through 86G.
	86G	Auxiliary trip and lockout relay.
2.5 MVA transformer and motor at 13.8 kV bus 3	47	Polyphase undervoltage and phase sequence protection. Trips circuit breaker P.
	49	Temperature overload protection using stator resistance temperature detectors. Initiates alarm.
	49/50	Replica-type thermal overload protection including instantaneous element for short-circuit protection. Trips circuit breaker P.
	50GS	Instantaneous ground-fault protection for 13.8 kV transformer primary. Trips circuit breaker P.
	51/50	Phase overcurrent and locked rotor protection. Trips circuit breaker P.
	63	Sudden pressure relay, transformer mounted. Trips circuit breaker P.
	87M	Motor differential relay. Trips circuit breaker P through auxiliary relay 86M.
	86M	Auxiliary trip and lockout relay.
1.0 MVA transformer at 13.8 kV bus 3	50GS	Instantaneous ground-fault protection. Trips circuit breaker Q.
	51/50	Time and instantaneous phase-fault protection. Trips circuit breaker Q.
480 V transformer secondary circuit breakers	67	Directional phase overcurrent protection for transformer faults and 13.8 kV line faults. Trips 480 V circuit breaker.

Copyright The Institute of Electrical and Electronics Engineers, Inc.
Provided by IHS under license with IEEE
No reproduction or networking permitted without license from IHS
Not for Resale

To protect against damage from these causes, loss of excitation (Device 40), pull-out (Device 56PO), and incomplete sequence (Device 48) relays should be provided. Multifunction motor protection relays, (Device 11) which combine many of the above functions, e.g., Device 49, 50LR, 50GS, 46, 48, in a single enclosure may be used. These are microprocessor-based devices that provide sensitive levels of protection and are easily programmable to meet the characteristics of the motor.

The 10 MVA generator connected to bus 3 is protected against internal faults by a percentage differential relay (Device 87G) and against ground faults by the overcurrent relay in the generator neutral (Device 51NG) where the current is limited by the 400 A neutral grounding resistor. Loss of excitation protection is provided by Device 40, and negative phase sequence protection caused by unbalanced loading or unbalanced fault conditions is provided by Device 46. The generator must also be protected from being driven as a motor (anti-motoring) when the prime mover can be damaged by such operation using a reverse power relay, Device 32. Backup overcurrent protection should be capable of detecting an external fault condition that corresponds to the minimum level of generator contribution with fixed excitation. This can be accomplished by three voltage-restraint or voltage-controlled overcurrent relays, Device 51V [B57].

It is good practice for transformers of the size shown on the incoming service, where a circuit breaker is used on both the primary and secondary sides, to install percentage differential relays and inverse characteristic overcurrent relays for backup protection. To prevent operation of the differential relays on magnetizing inrush current when energizing the transformer, the large proportion of currents at harmonic multiples of the line frequency contained in the magnetizing inrush current are filtered out and passed through the restraint winding so that the current unbalance required to trip is made much greater during the excitation transient than during normal operation.

5.5.2.2 Medium-voltage protection

The medium-voltage (2.4 kV) substations shown in figure 5-19 are designed primarily for the purpose of serving the medium- and large-size motors. Buses 2 and 3 fed by the 3750 kVA transformers are connected together by a normally closed tie circuit breaker, which is relayed in combination with each main circuit breaker by means of a partial differential or totalizing relaying scheme (Device 51). The current transformers are connected with the proper polarity so that the relay sees only the total current into its bus zone and does not see any current that circulates into a bus zone through either main and leaves through the tie. The relay backs up the feeder circuit breaker relaying connected to its respective bus or operates on bus faults to trip the tie and appropriate main circuit breakers simultaneously, thereby saving one step of relaying time over what is required when the tie and main circuit breakers are operated by separate relays. One possible disadvantage to this scheme occurs when a directional relay or main circuit breaker malfunctions for a transformer fault or when a bus feeder circuit breaker fails to properly clear a downstream fault. The next device in the system that can clear is the opposite primary feeder circuit breaker. If this occurs, a total loss of service to the substation will result. As a result, additional overcurrent relays (Device 51) are sometimes added to the tie circuit breaker on systems where the possibility of this occurrence cannot be tolerated, although they are not shown on the system in figure 5-19. These relays can be set so as not to

Copyright The Institute of Electrical and Electronics Engineers, Inc.
Provided by IHS under license with IEEE
No reproduction or networking permitted without license from IHS
Not for Resale

extend any other relay operating time, while providing the necessary backup protection to afford proper circuit isolation for faults upstream from either main circuit breaker.

The source ground relaying for the double-ended 2.4 kV primary unit substation is similar to that described for the 13.8 kV transformer secondary. The single-ended 1500 kVA 2.4 kV primary unit substation on bus1 illustrates a method for high-resistance grounding utilizing an isolation transformer in the neutral circuit. This scheme limits the magnitude of ground current to a safe level, while permitting the use of a lower voltage rated resistor stack. The remainder of the 2.4 kV relaying shown in figure 5-19 is, in one form or another, provided for protection of the motor loads.

The application of a combination motor and transformer as shown connected to the 13.8 kV bus 3 is referred to as the unit method. This is done to take advantage of the lower cost of the motor and the transformer at 2.4 kV, as compared to the motor alone at 13.8 kV. Motor internal fault protection is provided by instantaneous overcurrent relays, arranged to provide differential protection (Device 87M), by the use of zero-sequence (doughnut-type) current transformers located either at the motor terminals or, preferably, in the starter. The latter current transformer location will also afford protection to the cable feeder. Three current transformers and three relays are applied in this form of differential protection. Thermal overload protection is provided by Device 49 using an RTD as the temperature sensor. Surge protection is provided by the surge arrester and capacitor located at the motor terminals, while undervoltage and reverse-phase rotation protection is provided by Device 47 connected to the bus potential transformers. The sudden pressure relay (Device 63) is used for detection of transformer internal faults. Branch circuit phase and ground-fault protection is provided by Devices 51/50 and 50GS, respectively.

The 500 hp induction motor served from the 2.4 kV bus 1 is provided with a nonfused class E1 contractor. The maximum fault duty on this 2.4 kV bus is well within the 50 000 kVA interrupting rating of the contractor and, therefore, fuses are not required. Motor overload protection is furnished by the replica-type thermal relay (Device 49) with the instantaneous overcurrent element (Device 50) applied for phase-fault protection. Separate relaying for motor locked-rotor protection is normally not justified on motors of this size. Undervoltage and single-phasing protection is provided for this and the other motors connected to this bus by Device 27, an undervoltage relay, and by Device 60, a negative-sequence voltage relay connected to the bus potential transformers. Due to the essential function of the motors applied on this bus, a high-resistance grounding scheme is utilized. A line-to-ground fault produces a maximum of two amperes as limited by the 1.72 Ω resistor applied in the neutral transformer secondary. A voltage is developed across the overvoltage relay (Device 59N), which initiates an alarm signal to alert operating personnel.

The 1250 hp induction motor connected to 2.4 kV bus 2 is provided with a fused class E2 contractor for switching. The R-rated fuse provides protection for high-magnitude faults. Motor overload protection is furnished by a replica-type thermal relay (Device49). Locked-rotor and circuit protection for currents greater than heavy overloads is furnished by Device 51. Protection against single-phasing underload is provided by the current-balance relay (Device 46). Instantaneous ground-fault protection is provided by Device 50GS, which is

Copyright The Institute of Electrical and Electronics Engineers, Inc.
Provided by IHS under license with IEEE
No reproduction or networking permitted without license from IHS Not for Resale

connected to trip the motor contractor since the ground-fault current is safely limited to 800 A maximum. Undervoltage and reverse-phase rotation protection is provided by Device 47.

5.5.2.3 Low-voltage protection

Figure 5-19 illustrates several different types of 480 V unit substation operating modes. Buses 1, 2, and 3, for example, represent a typical low-voltage industrial spot network system that is often used where the size of the system and its importance to the plant operation require the ultimate in service continuity and voltage stability. Multiple sources operating in parallel and properly relayed provide these features. The circuit breakers are provided with solid-state trip devices as the overcurrent protection means. Ground-fault protection is also indicated and would be supplied either as an optional modification to the trip device on the respective circuit breaker, or as a standard zero-sequence relaying scheme on feeder circuits. For tripping of transformer secondary main circuit breakers and protecting the secondary winding, a relay located in the transformer neutral provides another convenient approach.

Since the trip devices of the three main circuit breakers supplying 480 V buses 1, 2, and 3 would normally be set identically to provide selectivity with the tie circuit breakers feeding the 3000 A bus and the other 480 V feeder circuit breakers for downstream faults, directional relays should be provided on these circuit breakers. This will permit selective operation between all 480 V feeder circuit breakers and the main circuit breaker during reverse current flow conditions for transformer or primary faults. Directional relays might also be applied to each of the service-tie circuit breakers feeding the 3000 A bus duct so as to provide selective operation between these interrupters for transformer secondary bus faults.

To protect the 800 A frame size feeder circuit breakers from the high level of available fault current at secondary buses 1, 2, 3, and 5, current-limiting fuses should be applied in combination with each circuit breaker. Since the tie circuit breaker at bus 5 is normally closed, the main circuit breakers are also provided with directional relays to ensure selective operation between mains for upstream faults.

The unit substation feeding 480 V bus 4 is a conventional radial arrangement and, except for the addition of ground-fault protection, the circuit breakers shown are equipped with standard trip devices. Bus 6 is fed from a delta-connected transformer and is provided with a ground-fault detection system with both a visible and an audible signal. The small low-current frame-size circuit breakers at this bus have standard trip devices only and do not require the assistance of current-limiting fuses as a result of the lower fault duty on the load side of the 1000 kVA transformer.

5.5.3 Relaying for an industrial plant with local generation [B59], [B66], [B76], [B77]

When additional power is required in a plant that has been generating all its power, and a parallel-operated tie with a utility system is adopted, the entire fault-protection problem should be reviewed, together with circuit breaker interrupting capacities and system component withstand capabilities. In figure 5-20 the following assumptions are made:

Copyright The Institute of Electrical and Electronics Engineers, Inc.
Provided by IHS under license with IEEE
No reproduction or networking permitted without license from IHS
Not for Resale

a) All circuit breakers in the industrial plant are capable of interrupting the increased short-circuit current.
b) Each plant feeder circuit breaker is equipped with inverse-time or very inverse-time overcurrent relays with instantaneous units.
c) Each of the generators is protected by differential relays and also has external fault backup protection in the form of generator overcurrent relays with voltage-restraint or voltage-controlled overcurrent relays, as well as negative-sequence current relays for protection against excessive internal heating for line-to-line faults.
d) The utility company end of the tie line will be automatically reclosed through synchronizing relays following a trip-out.
e) The utility system neutral is solidly grounded and the neutrals of one or both plant generators will be grounded through resistors.
f) The plant generators are of insufficient capacity to handle the entire plant load; therefore, no power is to be fed back into the utility system under any condition.

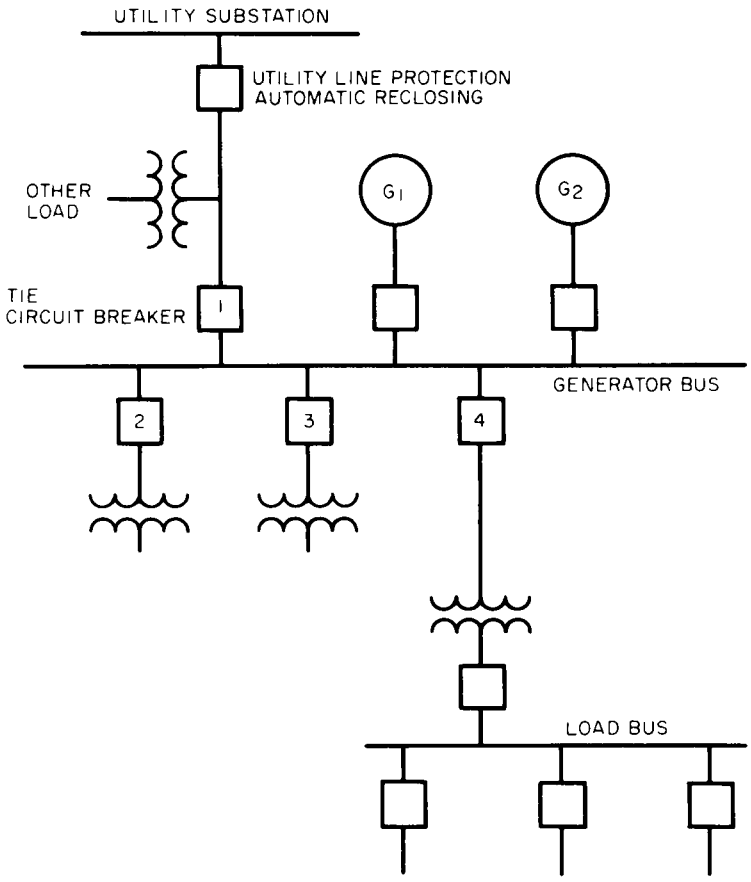

Figure 5-20—Industrial plant system with local generation

Copyright The Institute of Electrical and Electronics Engineers, Inc.
Provided by IHS under license with IEEE
No reproduction or networking permitted without license from IHS Not for Resale

Protection at the utility end of the tie line might consist of three distance relays or time overcurrent relays without instantaneous units. If the distance relays were used, they would be set to operate instantaneously for faults in the tie line up to 10% of the distance from the plant, and with time delay for faults beyond that point in order to allow one step of instantaneous relaying in the plant on heavy faults. If time overcurrent relays were used, they would be set to coordinate with the time delay and instantaneous relays at the plant. At the industrial plant end of the tie at circuit breaker 1, there should be a set of directional overcurrent relays for faults on the tie line, or reverse power relaying to detect and trip for energy flow to other loads on the utility system should the utility circuit breaker open, or both.

The directional overcurrent relays are designed for optimum performance during fault conditions. The tap and time dial should be set to ensure operation within the short-circuit capability of the plant generation, and also to be selective to the extent possible with other fault-clearing devices on the utility system.

The reverse power or power directional relay is designed to provide maximum sensitivity for flow of energy into the utility system where coordination with the utility protective devices is not a requisite of proper performance. A sensitive tap setting can be used, although a small time delay is required to prevent nuisance tripping that may occur from load swings during synchronizing.

Due to this time delay a reverse power relay trip of circuit breaker 1 alone may be too slow to prevent generator overload in the event of loss of the utility power source. Further, the amount of power flowing out to the other utility loads may not at all times be sufficient to ensure relay pickup. A complete loss of the plant load can only be prevented by early detection of generator frequency decay to immediately trip not only circuit breaker 1, but also sufficient nonessential plant load so that the remaining load is within the generation capability. An underfrequency relay to initiate the automatic load shedding action is considered essential protection for this system. For larger systems, two or more underfrequency relays may be set to operate at successively lower frequencies. The nonessential loads could thereby be tripped off in steps, depending on the load demand on the system.

The proposed relay protection for a tie line between a utility system and an industrial plant with local generation should be thoroughly discussed with the utility to ensure that the interests of each are fully protected. Automatic reclosing of the utility circuit breaker with little or no delay following a trip-out is usually normal on overhead lines serving more than one customer. To protect against the possibility of the two systems being out of synchronism at the time of reclosure, the incoming line circuit breaker l can be transfer-tripped when the utility circuit breaker trips. The synchro-check relaying at the utility end will receive a dead-line signal and allow the automatic reclosing cycle to be completed. Reconnection of the plant system with the utility supply can then be accomplished by normal synchronizing procedures.

Generator external-fault protective relays, usually of the voltage-restraint or voltage-controlled overcurrent type, and negative-sequence current relays provide primary protection in case of bus faults and backup protection for feeder or tie line faults. These generator relays

Copyright The Institute of Electrical and Electronics Engineers, Inc.
Provided by IHS under license with IEEE
No reproduction or networking permitted without license from IHS Not for Resale

will also operate as backup protection to the differential relays in the event of internal generator faults, provided there are other sources of power to feed fault current into the generator.

5.6 Protection requirements

The primary purpose of a coordination study is to determine satisfactory ratings and settings for the distribution system protective devices. The protective device settings should be chosen so that pickup currents and operating times are short, but sufficient to override system transient overloads such as inrush currents experienced when energizing transformers or starting motors. Further, the devices should be set for selective operation so that the circuit interrupter closest to the fault opens before other devices.

Determining the ratings and settings for protective devices requires familiarity with the NEC [B10] requirements for the protection of cables, motors, and transformers, and with IEEE Std C57.12.00-1987 [B45] for transformer magnetizing inrush current and transformer thermal and magnetic stress damage limits.

5.6.1 Transformers [B43]

5.6.1.1 Maximum overcurrent protection

The NEC [B10], Article 450-3, specifies the maximum overcurrent level at which the transformer protective devices may be set. If there is no secondary protection, transformers with primaries rated for more than 600 V require either a primary circuit breaker that will operate at no more than 300% or a fuse sized not greater than 250% of transformer full-load current. Better protection will be realized with breaker settings or fuse ratings lower than these NEC maximum levels. The actual value depends on the nature of the specific load involved and the characteristics of the downstream protective devices. When both primary and secondary protective devices are provided, the maximum protective levels depend on the transformer impedance and secondary voltage. These maximum levels of protection, taken from NEC, table 450-3(a)(2)(b), are shown in table 5-1.

Transformers with primaries rated 600 V or less require primary protection rated at 125% of full-load current when no secondary protection is present, and 250% as the maximum rating of the primary feeder overcurrent device when secondary protection is set at no more than 125% of transformer rating. Certain exceptions to these requirements for smaller-sized transformers, detailed in NEC, Article 450-3, are intended to permit the application of protective devices having standard ratings normally available. The permissible circuit breaker setting is generally higher than the fuse rating setting due to their differences in the circuit opening characteristics in the overload region.

Copyright The Institute of Electrical and Electronics Engineers, Inc.
Provided by IHS under license with IEEE
No reproduction or networking permitted without license from IHS Not for Resale

Table 5-1—Maximum overcurrent protection (in percent)

Transformer rated impedance	Transformers with primary and secondary protection				
	Primary Over 600 V		Secondary		
			Over 600 V		600 V or below
	Circuit breaker setting	Fuse rating	Circuit breaker setting	Fuse rating	Circuit breaker setting or fuse rating
No more than 6%	600	300	300	250	250
More than 6% but no more than 10%	400	300	250	225	250

5.6.1.2 Transformers withstand limits

In the years prior to the adoption of IEEE Std C57.109-1985 [B51], the time limits defining transformer withstand capability were based on the following values of time and current, shown in Table 5-2.

Table 5-2—Transformer withstand limits prior to IEEE Std C57.109-1985

Impedance (percent)	Current (time base value)	Time (seconds)
4	25	2
5	20	3
6	16.6	4
7 and above	14.3 or less	5

At levels of current in excess of about 400–600% of full load, the transformer withstand characteristic can be conservatively approximated by a constant I^2t (heating) plot, which is represented by a straight line of minus 2 slope extending to and terminating at the appropriate short-circuit withstand point.

It has been widely recognized that damage to transformers from through faults is the result of mechanical and thermal effects. The former, in fact, has gained increased recognition as a major factor in transformer failures. Accordingly, two standards significantly revise the familiar ANSI withstand point: IEEE Std C57.109-1985 [B51] for liquid-filled transformers and IEEE Std C57.12.59-1989 [B47] for dry-type transformers. A complete discussion of this subject is given in Chapter 10 of IEEE Std 242-1986 [B57], and in the Appendix of IEEE Std C37.91-1985 [B43].

Copyright The Institute of Electrical and Electronics Engineers, Inc.
Provided by IHS under license with IEEE
No reproduction or networking permitted without license from IHS
Not for Resale

The following discussion briefly reviews the through-fault protection guidelines for Category I, dry-type transformers (5–500 kVA single-phase, and 15–500 kVA three-phase); Category II of dry and liquid-filled transformers (501–1667 kVA single-phase, and 501–5000 kVA three-phase); and Category III of liquid-filled transformers (1668–10 000 kVA single-phase, and 5001–30 000 kVA three-phase). The through-fault protection curves take into consideration the fact that transformer damage due to mechanical effects is cumulative, and the number of through-faults to which a transformer can be exposed is different, depending on the transformer application.

A straight line curve having an I^2t constant of 1250 from 2–100 s has been established for Category I transformers for both frequently and infrequently occurring faults. Two through-fault protection curves have been established for both Category II [figures 5-21(a) and 5-21(b)] and Category III (figure 5-22) transformers. One curve is for those applications where faults occur frequently, typically more than 10 in a transformer lifetime, and the second is for infrequently occurring faults, typically not more than 10.

Where secondary-side conductors are enclosed in conduit, busway, or otherwise isolated, as found in industrial, institutional, and commercial systems, the incidence of faults is extremely low and the infrequent fault curve may be used to determine the settings of main secondary devices, primary devices, or both. In contrast, transformers with secondary-side overhead lines have a relatively high exposure to through-faults, and the use of reclosing-type protective devices may subject the transformer to repeated current surges from each fault. In these cases, the frequent fault withstand curve should be used.

Another consideration is a relative shift in the damage point that occurs in delta-wye transformers with the wye connected secondary and its neutral point grounded. A secondary single-phase-to-ground fault of one per unit value (using the three-phase fault values as a base) will produce a fault current of one per unit in the delta of the primary winding, but results in only 0.58 per unit current in the line to the delta winding that contains the protective device. Therefore, a second damage characteristic, corresponding to that provided by IEEE Std C57.109-1993 [B51] and derated for a wye-wound solidly grounded neutral should be plotted at 0.58 per unit of the normal characteristic.

5.6.1.3 Other protection considerations

In selecting the settings or ratings of the primary protective device, the following items should be known and considered:

a) Voltage rating of the system
b) Rated load and inrush current of the transformer
c) Short-circuit duty of the supply system in kilovoltamperes
d) Type of load, whether steady, fluctuating, nonlinear, or subject to heavy motor, welding, furnace, or other starting surges
e) Selective coordination with other protective devices

Relays, when used in combination with power circuit breakers for protection of a transformer primary circuit, should have a time–current characteristic similar to that of the first down-

Copyright The Institute of Electrical and Electronics Engineers, Inc.
Provided by IHS under license with IEEE
No reproduction or networking permitted without license from IHS Not for Resale

THROUGH-FAULT PROTECTION CURVE FOR FAULTS THAT WILL OCCUR FREQUENTLY (TYPICALLY MORE THAN TEN IN A TRANSFORMER'S LIFETIME)

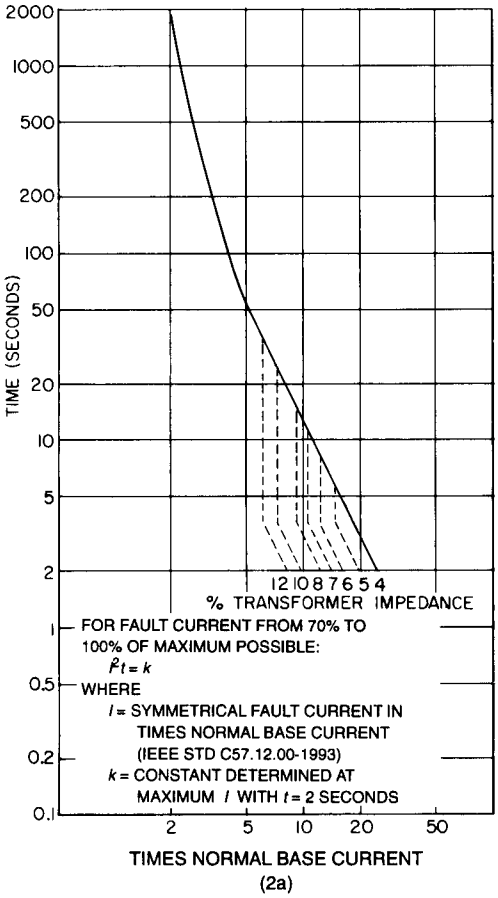

(2a)

THROUGH-FAULT PROTECTION CURVE FOR FAULTS THAT WILL OCCUR INFREQUENTLY (TYPICALLY MORE THAN TEN IN A TRANSFORMER'S LIFETIME)*

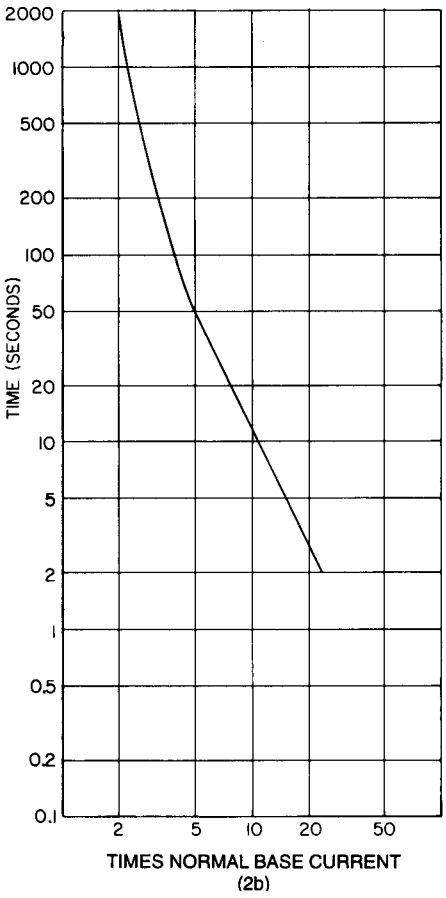

(2b)

*This curve may also be used for backup protection where the transformer is exposed to frequent faults normally cleared by high-speed relaying.

Source: IEEE Std C57.109-1993.

NOTES
1—Sample $I^2t = k$ curves have been plotted for selected transformer short-circuit impedances as noted in 2a.
2—Low current values of 3.5 and less may result from overloads rather than faults. An appropriate loading guide should be referred to for specific allowable time durations.

Figure 5-21(a)—Category II liquid-filled transformers

Copyright The Institute of Electrical and Electronics Engineers, Inc.
Provided by IHS under license with IEEE
No reproduction or networking permitted without license from IHS
Not for Resale

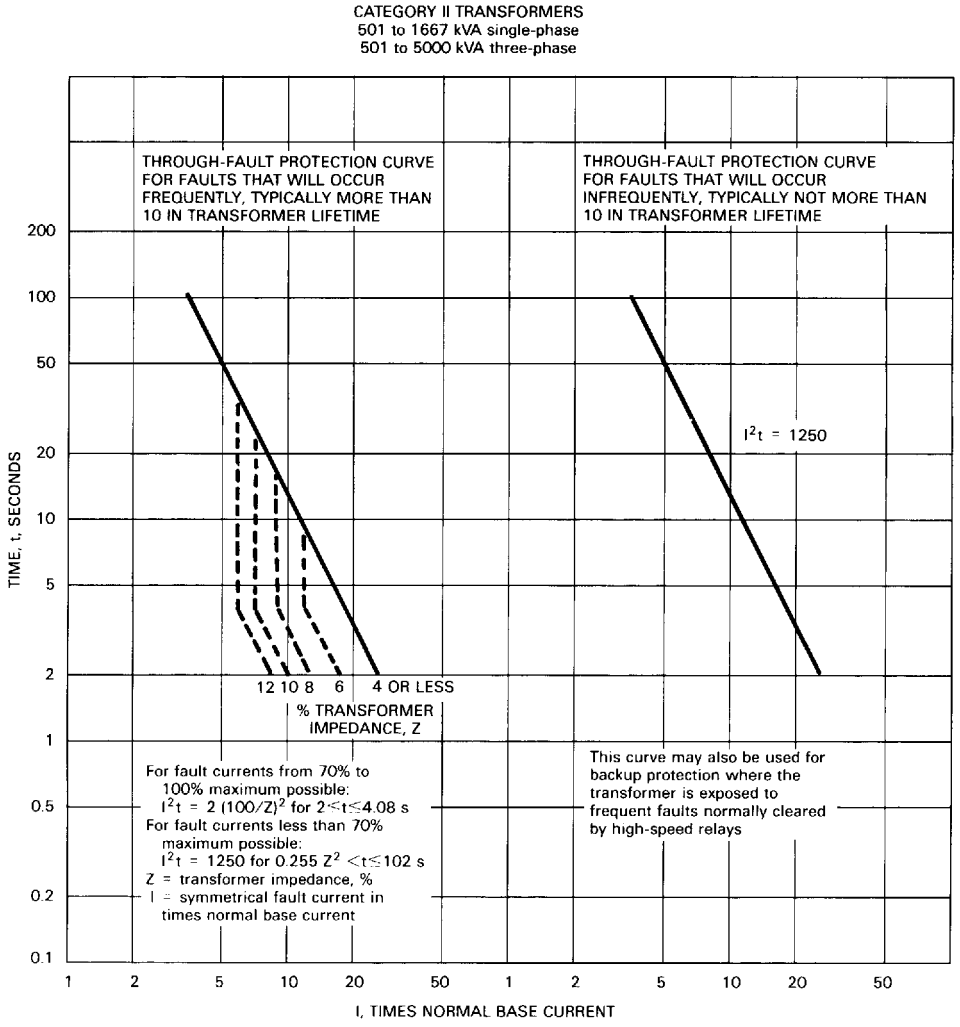

Source: IEEE Std C57.12.59-1989.

Figure 5-21(b)—Category II dry-type transformers

stream device. Pickup of the time-delay element may typically be 150–200% of the transformer primary full-load current rating. The instantaneous pickup setting should be set at 150–160% of equivalent maximum secondary three-phase symmetrical short-circuit current to allow for the dc component of fault current during the first half-cycle. The setting should also permit the magnetizing inrush current to flow. In general, the transformer inrush current is approximately 8 to 12 times the transformer full-load current for a maximum period of 0.1 s. This point should be plotted on the time–current curve, and it should fall below the transformer primary protection device curve. If there is more than one transformer connected to this feeder, the pickup of the time-delay element should not exceed 600% full-load current

Copyright The Institute of Electrical and Electronics Engineers, Inc.
Provided by IHS under license with IEEE
No reproduction or networking permitted without license from IHS
Not for Resale

THROUGH-FAULT PROTECTION CURVE FOR FAULTS THAT WILL OCCUR FREQUENTLY (TYPICALLY MORE THAN FIVE IN A TRANSFORMER'S LIFETIME)

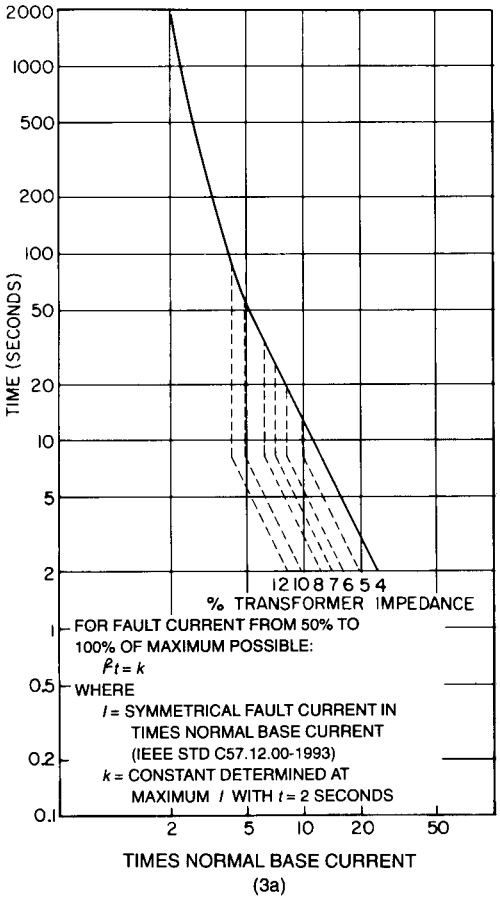

(3a)

THROUGH-FAULT PROTECTION CURVE FOR FAULTS THAT WILL OCCUR INFREQUENTLY (TYPICALLY MORE THAN FIVE IN A TRANSFORMER'S LIFETIME)*

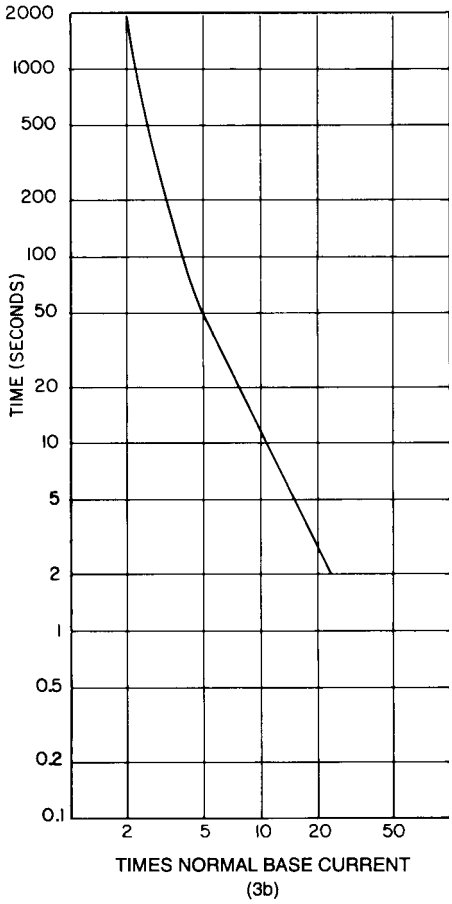

(3b)

*This curve may also be used for backup protection where the transformer is exposed to frequent faults normally cleared by high-speed relaying.

Source: IEEE Std C57.109-1993.

NOTES
1—Sample $I^2t = k$ curves have been plotted for selected transformer short-circuit impedances as noted in 3a.
2—Low current values of 3.5 and less may result from overloads rather than faults. An appropriate loading guide should be referred to for specific allowable time durations.

Figure 5-22—Category III transformers

Copyright The Institute of Electrical and Electronics Engineers, Inc.
Provided by IHS under license with IEEE
No reproduction or networking permitted without license from IHS
Not for Resale

of the smallest transformer, assuming that the transformers have secondary protection and an impedance of 6% or less. When used in the transformer secondary circuit, the pickup of the time-delay element should also be between 150 and 200% full-load current of the transformer secondary rating. A typical circuit configuration is illustrated by the one-line diagram insert in figure 5-27.

5.6.2 Feeder conductors

Restrictions that apply are provided in the NEC [B10]. Protection of feeders or conductors rated 600 V or less shall be in accordance with their current-carrying capacity as given in NEC [B10] tables, except where the load includes motors. In this case it is permissible for the protective device to be set higher than the continuous capability of the conductor (to permit coordination on faults or starting the largest connected motor while the other loads are operating at full capacity), since running overload protection is provided by the collective action of the overload devices in the individual load circuits. Where protective devices rated 800 A or less are applied that do not have adjustable settings that correspond to the allowable current-carrying capacity of the conductor, the next higher device rating may be used. Other exceptions are allowed in the NEC, Article 240-3, such as capacitor and welder circuits and transformer secondary conductors.

Feeders rated more than 600 V are required to have short-circuit protection, which may be provided by a fuse rated at no more than 300% of the conductor ampacity or by a circuit breaker set to trip at no more than 600% of the conductor ampacity. Although not required by the NEC [B10], improved protection of these circuits is possible when running overload protection is also provided in accordance with the conductor ampacity.

The flow of short-circuit current in an electric system imposes mechanical and thermal stresses on cable as well as circuit breakers, fuses, and the other electric components. Consequently, to avoid severe permanent damage to cable insulation during the interval of short-circuit current flow, feeder conductor damage characteristics should be coordinated with the short-circuit protective device. The feeder conductor damage curve should fall above the clearing-time curve of its protective device.

This damage curve represents a constant I^2t limit for the insulated conductor. It is dependent upon the maximum temperature that the insulation can be permitted to reach during a transient short-circuit condition without incurring severe permanent damage. Recommended short-circuit temperature limits, which vary according to the insulation type, are published by cable manufacturers. For any particular magnitude of current, the time required to reach the temperature limit can be determined from one of the following equations.

For copper conductors:

$$\left(\frac{I}{A}\right)^2 t = 0.0297 \log_{10}\frac{(T_2 + 234)}{(T_1 + 234)}$$

Copyright The Institute of Electrical and Electronics Engineers, Inc.
Provided by IHS under license with IEEE
No reproduction or networking permitted without license from IHS Not for Resale

For aluminum conductors:

$$\left(\frac{I}{A}\right)^2 t = 0.0125 \log_{10}\frac{(T_2 + 228)}{(T_1 + 228)}$$

where

I = rms current in amperes
t = time in seconds
A = conductor cross-sectional area in circular mils
T_1 = initial conductor temperature in °C
T_2 = final conductor temperature in °C (short-circuit temperature limit)

If the initial and short-circuit temperatures are known, these equations can be used to construct a conductor damage curve which is valid for time intervals up to approximately 10 s. Since the initial temperature depends upon the cable loading and ambient conditions, and therefore cannot usually be determined accurately, it is common to conservatively assume that the initial temperature is equal to the rated maximum continuous temperature of the conductor.

5.6.3 Motors

5.6.3.1 Large alternating-current rotating apparatus

(See IEEE Std C37.96-1988 [B44].) The protection of an ac induction motor is a function of its type, size, speed, voltage rating, application, location, and type of service. In addition, a motor may be classified as being in essential or nonessential service, depending upon the effect of the motor being shut down on the operation of the process or plant. Although the discussion earlier in this chapter on the different types of protective devices indirectly touches on some of the problems associated with protecting motors, it is worthwhile to examine such an important subject from the standpoint of the machine itself.

Unscheduled motor shutdowns may be caused by the following:

a) Internal faults
b) Sustained overloads and locked rotor
c) Undervoltage
d) Phase unbalance or reversal
e) Voltage surges
f) Reclosure and transfer switch operations

The ideal relay scheme for an induction motor must provide protection against all these hazards. In the following text, the relaying approach to protect against each of these problems will be discussed in general terms. Later in the chapter, several specific applications will be discussed in detail. For a complete discussion on motor protection, see Chapter 9 of IEEE Std 242-1986 [B57].

Copyright The Institute of Electrical and Electronics Engineers, Inc.
Provided by IHS under license with IEEE
No reproduction or networking permitted without license from IHS Not for Resale

a) *Internal faults*. Internal fault protection for induction motors can be obtained by either overcurrent relays or, preferably, percentage differential relays, as described in 5.3.5.1. When the supply source is grounded, separate and more sensitive ground-fault protection can be provided using the relaying schemes described in 5.3.7.1 and 5.3.7.2. The preferred solution is to use the zero-sequence approach for ground-fault relaying where all three phase leads are passed through the single window-type current transformer. This eliminates false tripping due to unequal current-transformer saturation and allows the use of a fast, sensitive ground-fault relay setting.

b) *Sustained overloads and locked rotor.* Conventional overcurrent relays do not provide suitable protection against sustained overloads because they will overprotect the motor if set to pickup for the normal overloads encountered. That is, the relay will not allow full use of the thermal capability of the motor and in many cases will not provide sufficient time delay to permit complete starting. This is shown in figure 5-23, where for most conditions less than locked-rotor current there is too much margin between the motor thermal capability curve and the relay operating time characteristic. With a higher pickup and appropriate time-dial setting as shown, the overcurrent relay will provide excellent locked-rotor and short-circuit protection of the motor.

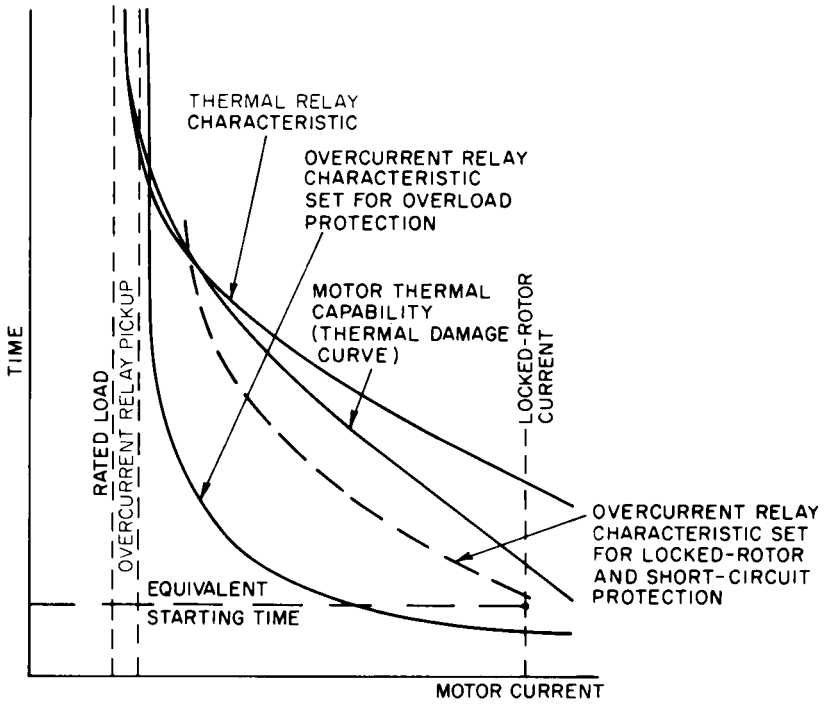

Figure 5-23—Motor and protective relay characteristics

Copyright The Institute of Electrical and Electronics Engineers, Inc.
Provided by IHS under license with IEEE
No reproduction or networking permitted without license from IHS
Not for Resale

Thermal relays, on the other hand, will give adequate protection for light and medium overloads, allowing loading of the motor close to its thermal capability. In general, however, thermal relays will not give adequate protection for heavy overloads, locked rotor, and short circuits. Therefore, in most cases both types of relays should be used to provide optimum protection for overloads, locked rotor, and short circuits, and allow maximum use of the motor capability. In this way the characteristics of the protection can be closely shaped to the motor thermal damage curve.

There are two common types of thermal relays available for motor protection, as discussed in 5.3.14 and 5.3.16. One operates in response to resistance temperature detectors embedded in the machine windings, and the other operates in response to motor current. The latter type normally has adjustable pickup and trip characteristics to compensate for the motor service factor, as well as the ambient temperature differences between motor and relay.

Frequently, medium-voltage motors are protected by a contractor with thermal overload relays applied in combination with current-limiting fuses, which are intended to open the circuit for high-fault currents. In addition to matching the overload protection to the motor thermal capabilities for such applications, it is equally important to select the fuses so that they protect the contractor by opening faster on currents in excess of the contractor interrupting rating. Likewise, the overload relays must prevent fuse blowing by tripping before the fuse clears on currents within the contractor capabilities.

c) *Undervoltage*. Low voltages can prevent motors from coming up to normal operating speed, or they can result in overload conditions. Although thermal overload relays will detect an overload resulting from undervoltage, large motors and medium-voltage motors should have separate undervoltage protection. An induction-type undervoltage relay is usually provided to prevent starting when the voltage is unacceptably low, and to prevent operation on momentary voltage dips.

d) *Phase Unbalance or Reversal*. When starting from rest, a single-phase condition (one line open) will prevent starting, while reverse-phase rotation can have immediate disastrous results on the motor or the driven equipment. In all cases where such conditions are likely to exist, a phase-failure and reverse-phase relay should be applied.

If not properly protected, three-phase motors are vulnerable to damage when loss of voltage occurs on one phase. There are numerous causes of such loss of voltage, and these can occur anywhere in the distribution system. The chief problem resulting from single-phasing of three-phase motors is overheating, which can cause reduction of life expectancy or complete failure.

The modern practice of applying three overload devices on three-phase motors assures detection of single-phasing in most cases. When operating at normal load, loss of voltage on one phase causes an abnormal current in the remaining phases, which can cause overheating within the motor at a greater rate than normal load current and this must be sensed by the protective devices. However, under some conditions of light loading, three-phase motors can overheat when single-phased, without being detected by the overload protective devices. Even when operating near rated horsepower under single-phase conditions, the motor can be damaged prior to

Copyright The Institute of Electrical and Electronics Engineers, Inc.
Provided by IHS under license with IEEE
No reproduction or networking permitted without license from IHS Not for Resale

response by conventional protective devices. Negative-sequence voltage or current-balance relays should be considered for protection of motors above 1000 hp against these conditions [B28].

e) *Voltage surges*. Voltage surges are transient overvoltages caused by switching or lightning strokes. They are characterized by a steep wave front. Surge protection equipment consists of a protective capacitor and arrester that should be connected as close to the motor terminals as possible [B32]. Further application criteria for treating this problem are discussed in Chapter 6 of this book.

f) *Reclosure and transfer switch operations* [B26]. Under normal operating conditions, the self-generated voltage of an ac motor lags the bus voltage by a few electrical degrees in induction motors and by 25 to 35 electrical degrees in synchronous motors. The operation of a recloser on the utility power supply or the transfer to an alternate source will cause the power to be interrupted for a fraction of a second or longer. When power is removed from a motor, the terminal voltage does not collapse suddenly, but decays in accordance with the open-circuit machine time constant (time for self-generated voltage to decay to 37% of rated bus voltage). The load with its inherent inertia acts as a prime mover that attempts to keep the rotor turning. The frequency or phase relationship of the motor self-generated voltage no longer follows the bus voltage by a fixed torque angle, but starts to separate farther from it (out-of-phase in electrical degrees) as the motor decelerates.

If the motor is reconnected to the bus voltage with its self-generated voltage at a high level and severely out-of-phase, dangerous stresses that are both mechanical and electrical are placed on the motor and its driven load. In addition to possible damage to the motor, excessive torque may also damage the motor coupling. Furthermore, the excessive current drawn by the motor may trip the overcurrent protective device.

A check should be made to determine that re-energization occurs at a point where the motor and load will not be subjected to excessive forces. Protection against this problem can be provided by certain types of frequency relays that operate as a function of the rate of change of frequency to remove the motor from the line. An alternate method is to prevent re-energization until the residual voltage has decayed to a safe value.

Automatic transfer switching means can be provided with accessory controls that disconnect motors prior to transfer and reconnect them after transfer and when the residual voltage has been substantially reduced. Another method is to provide in-phase monitors within the transfer controls that prevent transfer until the motor bus voltage and the source are nearly synchronized.

g) *Multifunction motor protective relays, Device 11*. Many of the protective functions just described can now be provided in a single relay enclosure using solid-state microprocessor technology. Some of the advantages it offers over the single function relays are as follows:

1) Reduction in panel space requirements
2) Simplification in panel wiring
3) Ease in selection of set points

Copyright The Institute of Electrical and Electronics Engineers, Inc.
Provided by IHS under license with IEEE
No reproduction or networking permitted without license from IHS Not for Resale

4) Measurement and storage of operating data such as full load current, locked-rotor current, RTD temperatures and percent current unbalance
5) Diagnostic capabilities
6) Ability to communicate with a remote location

5.6.3.2 Small motors

The specific requirements for the protection of small induction motors are specified in Article 430 of the NEC [B10]. Each motor branch circuit must be provided with a disconnect means, branch circuit protection, and a motor running overcurrent protective device. Two examples are shown in figure 5-24.

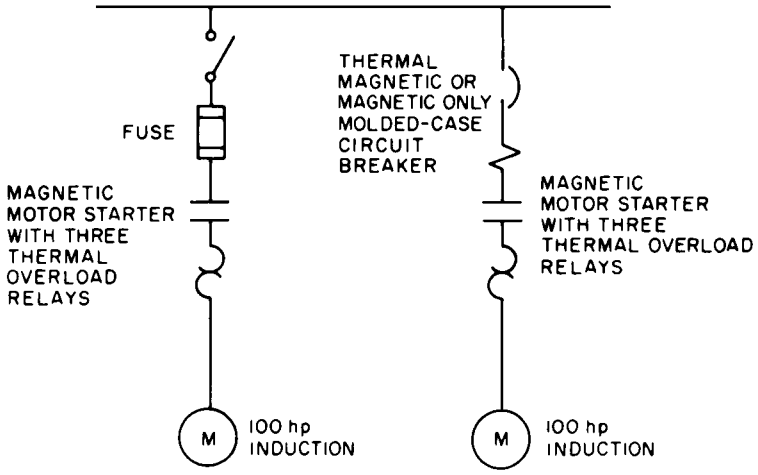

Figure 5-24—Motor protection acceptable to the NEC

The branch circuit disconnect and protective means are generally combined in one device, such as a molded-case circuit breaker or a fused disconnect switch. The motor running overcurrent protection is provided by overload relays. The motor is energized and de-energized by a controller. This unit may be operated either manually or electrically (magnetic type). The overload relays open the motor controller to provide motor running overcurrent protection. It is not uncommon to have the motor controller included in the same enclosure as the motor branch circuit disconnect and overcurrent protection device. The complete unit is called a combination motor starter, providing motor branch circuit disconnect and overcurrent protection along with motor control and running overcurrent protection. The motor branch circuit overcurrent device must allow the motor to start (without opening on motor inrush current), but it must open for short circuits.

A combination disconnect and overcurrent protective device must be capable of safely interrupting the circuit under the maximum available short circuit and, in so doing, protect the branch circuit. The switch should be quick-make-quick-break, horsepower-rated, and capable of being closed in on a fault of the magnitude available at its application point without

Copyright The Institute of Electrical and Electronics Engineers, Inc.
Provided by IHS under license with IEEE
No reproduction or networking permitted without license from IHS
Not for Resale

damage. The switch must safely withstand the I^2t and peak let-through current of the fuses without realizing an immediate failure or change in operating characteristics, which could lead to problems during normal operation sometime later. In like manner, a combination starter utilizing either a thermal-magnetic or a magnetic-only circuit breaker must have a short-circuit rating equal to or greater than the maximum available fault current.

For running overcurrent protection it is necessary to select the proper thermal unit for the overload relay. All manufacturers' tables of thermal units are based on the operation of the motor and controller in the same ambient temperature of 40 °C or less. To apply these devices properly, the following must be determined:

a) Motor full-load and locked-rotor current from motor nameplate
b) Motor service factor from nameplate
c) Ambient temperature for motor
d) Ambient temperature for controller
e) Motor starting time with load connected

With this information, and following the manufacturer's recommendation, an adjusted motor full-load current can be determined to select the proper overload relay thermal unit from the manufacturer's table. Then it must be verified that the trip characteristic will permit starting.

Low-voltage motor contactors are now available with integral three-phase overload protection using solid-state technology. These overload relays do not require separate thermal units (heaters), since the trip rating can be set over a wide current range. Selectable characteristics for NEMA Class 10, 20, and 30 (NEMA ICS 1-1988 [B71]) may be available to match the motor-operating characteristics.

Undervoltage protection is inherent in the use of a magnetic controller and three-wire control, since the control voltage is taken from the line or primary side of the controller. Most magnetic motor controllers will drop out when the operating coil voltage drops to 65% of its rating. All units do not have the same drop-out characteristics, so the actual drop-out voltage should be determined by test. For many motors the three overload devices may not provide complete single-phase protection, in which case it can be furnished as a special equipment modification.

5.7 Use and interpretation of time-current coordination curves

5.7.1 Need and value

Determining the settings and ratings for the overcurrent devices in a power system is an important task and, when correctly done, assures the intended performance of the system. Continuity of plant electric service requires that interrupting equipment operate in a selective manner. This may require longer opening times (for a given current) of the interrupters successively closer to the power source during faults. The necessity for maximum safety to personnel and electric equipment, on the other hand, calls for the fastest possible isolation of faulted circuits.

Copyright The Institute of Electrical and Electronics Engineers, Inc.
Provided by IHS under license with IEEE
No reproduction or networking permitted without license from IHS Not for Resale

The coordination curve plot provides a graphical means of displaying the competing objectives of selectivity and protection. This method of analysis is useful when designing the protection for a new power system, when analyzing protection and coordination conditions in an existing system, or as a valuable maintenance reference when checking the calibration of protective devices. The coordination curves provide a permanent record of the time–current operating relationship of the entire protection system.

Actual plotting of the curves on log–log graph paper using a common current scale is essential because rarely do all the fault protective devices involved have time–current curves of the same shape, and it is difficult to visualize the relationship of the many different shapes of curves. A scale corresponding to the currents expected at the lowest voltage level works best. For example, fault-current protective devices on both sides of a 2400-480 V transformer should be plotted on the 480 V current scale. To plot 2400 V device time current curves on the 480 V scale, first determine the desired time and current settings on the basis of current expected on the 2400 V circuit. Then multiply the 2400 V currents by five, the ratio of 2400-480, to obtain equivalent current at 480 V and plot on the 480 V scale. The time delay setting may have to be adjusted to obtain the desired time interval with the load-side protective device.

Usually the coordination plot is made on log–log graph paper with current as the abscissa (horizontal axis) and time as the ordinate (vertical axis). A choice of the most suitable current and time settings is made for each device to provide the best possible protection and safety to personnel and electric equipment and also to function selectively with other protective devices to disconnect the faulted equipment with as little disturbance as possible to the rest of the system.

Software is commercially available for the personal computer (PC) which will plot the time–current curves on the log–log paper from large libraries of device characteristics. These programs can all but eliminate the time-consuming task of drawing the curves by hand [B62].

5.7.2 Device performance

The manufacturers of protective devices publish time–current characteristic curves and other performance data for all devices used in a protection system. The time–current curves of direct-acting time-delay trip devices, fuses, and time-delay thermal devices include the necessary allowance for overtravel, manufacturing tolerances, etc. The individual time–current characteristics of overcurrent devices are transposed onto a common curve for selecting coordinated settings or ratings.

Typical relay curves are shown in figure 5-6. Relay time–current curves normally begin at multiples of 1.5 times pickup current setting, since their performance cannot be accurately predicted below that value. However, curves showing the approximate expected time–current performance of lower values can usually be obtained from the manufacturer, if required. The relay time–current curves define the operating time of the relay alone and do not include any circuit breaker interrupting time.

Copyright The Institute of Electrical and Electronics Engineers, Inc.
Provided by IHS under license with IEEE
No reproduction or networking permitted without license from IHS
Not for Resale

5.7.2.1 Time-delay relays

There are three criteria that should be observed when selecting the characteristics and settings of time-delay relays for selective operation. These criteria are as follows:

a) Allow adequate time margin between relays
b) Use relays having the same characteristics
c) Set relays closer to the source with a higher pickup current

The time–current characteristics of relays are represented by families of single line curves, see figure 5-6, which represent the time to close the relay contact with a specific current flowing. A time interval must be added to the second relay in a chain because it continues to see fault current until the circuit breaker associated with the first relay opens and the arc is extinguished. This time is nominally 5–8 cycles for the circuit breakers commonly used in industrial systems, although the actual contact parting time will be 3–5 cycles. After the first circuit breaker has opened the circuit and de-energized the second relay, the contacts of that relay (induction-disk type) will continue to coast for 0.1 s due to the inertia of the induction disk to which the movable contact is attached.

	Handset	Set using instruments
Breaker operating time (5 cycles)	0.083 s	0.083 s
Relay overtravel (disk inertia)	0.10 s	0.10 s
Relay tolerance and setting errors	0.217 s	0.117 s
Allowable time interval	0.40 s	0.30 s

A total time margin of 0.40 s at maximum fault current is sufficient to afford satisfactory selectivity between inverse-time relays. As shown in the tabulation, this includes a safety factor of 0.217 s to cover manufacturing variations and inaccuracies in positioning of the time dial or lever when setting the relay. Where it is desired to keep the device operating times to a minimum, the time margin can be safely reduced to approximately 0.30 s when the time delay setting is accurately set using current and timing instruments. Further reduction of this margin (to approximately 0.20–0.25 s) is possible with solid-state relays which reset rapidly, since there is no disk inertia to account for.

For best results, relays having the same characteristic shape, i.e., very inverse, should be selected. When two induction relays in series having the same shape are set with the appropriate time interval at the maximum available fault current, they will also be selective on lower current values. Where the relay characteristics are different, selectivity can be obtained provided the relay closer to the source has a less inverse characteristic.

The relay closer to the source should always have a pickup current setting that is higher than the relay nearer the load. If the pickup setting is lower, the curves of the two relays will cross each other at some low value of fault current, and the line-side relay will trip first for all currents below that value.

Copyright The Institute of Electrical and Electronics Engineers, Inc.
Provided by IHS under license with IEEE
No reproduction or networking permitted without license from IHS Not for Resale

These criteria are illustrated in figure 5-25, which is a plot of the time–current curves on a common current base for the four relays in series. In this case, the power supply was sufficient to provide a constant 250 000 kVA short-circuit duty, assuming no fault current contribution from rotating equipment connected to the 2.4 kV system. On this basis, the maximum 2.4 kV system symmetrical fault current is 20 000 A and the maximum 13.8 kV system symmetrical fault current is 10 460 A (60 000 A on a 2.4 kV base). It is also assumed that relay D at the end of the chain was set at a minimum of 0.5 s.

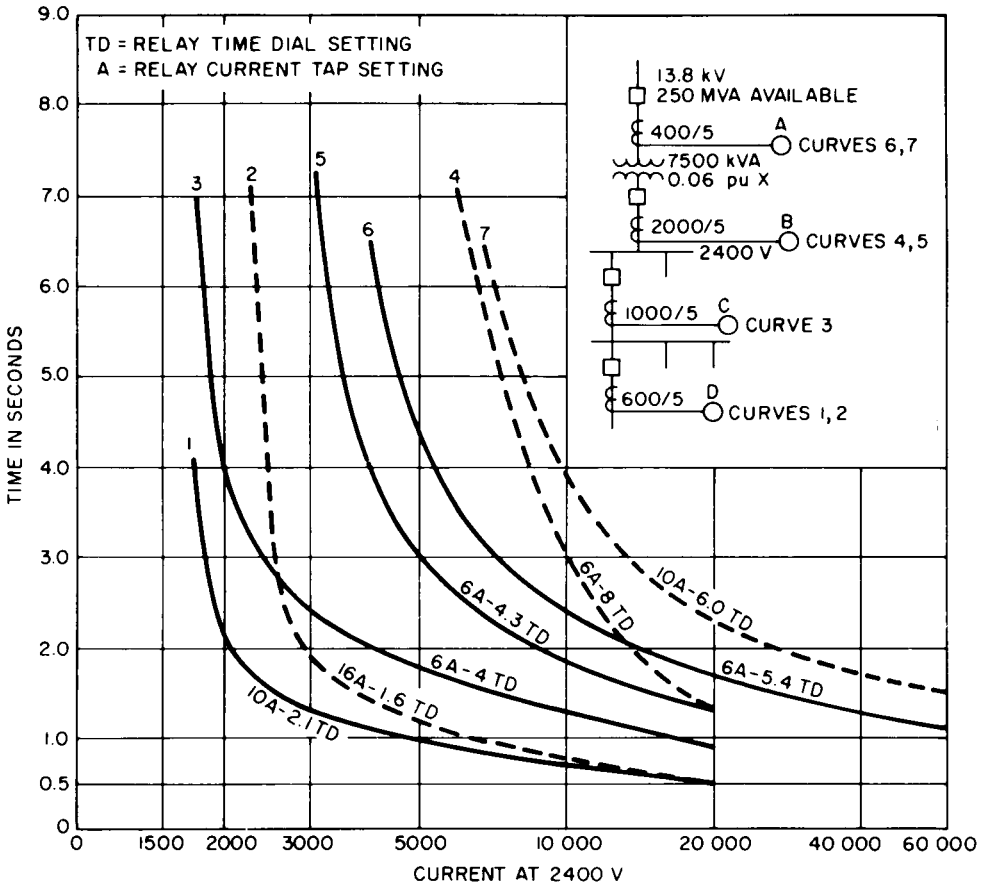

Very Inverse Characteristic — Curve 4
Moderately Inverse Characteristic — Curves 1—3, 5—7

NOTE: The curves are plotted on semilog coordinates for illustrative purposes only. Normally log-log coordinates are used. Also, in actual practice tap settings above 8A are seldom required.

Figure 5-25—Selecting time–current curves and relay tap settings for an industrial plant distribution system

Copyright The Institute of Electrical and Electronics Engineers, Inc.
Provided by IHS under license with IEEE
No reproduction or networking permitted without license from IHS
Not for Resale

The three sets of 2.4 kV relays, B, C, and D, were coordinated by selecting time/current settings that would make their operating times 0.4 s apart at the maximum current of 20 000 A. In the next step, the single set of relays on the 13.8 kV system, relay A, was coordinated with those on the 2.4 kV system using the same value of fault current available on the 2.4 kV side, only reflecting the current to the high side for relay A (3480 A at 13.8 kV). Coordination was accomplished by selecting time/current settings that would give 0.4 s delay between relays A and B for a 20 000 A fault on the 2.4 kV system. This results in operating times at 20 000 A at the transformer secondary of 0.55 s, 0.9 s, 1.3 s, and 1.7 s for relays D, C, B, and A, respectively. Using relays all having moderately inverse characteristics, shown by the solid lines of curves 1, 3, 5, and 6, the goal of a selectively coordinated system can be achieved.

The following describe the results when the specified criteria are not followed. As shown in figure 5-25, if relay D were set at a higher pickup current than relay C, shown by the dotted line of curve 2, then the two relay curves will cross, and selectivity is lost for fault currents lower than the crossover point even though the required 0.4 s time interval at 20 000 A is met. In this case, the pickup current of relay C would have to be increased to maintain selectivity with relay D.

The problem created when relay B has a very inverse characteristic—the dotted line curve 4—instead of an inverse time curve as the others have, is illustrated by curves 4, 5, 6, and 7 in figure 5-25. Curve 4 meets the requirement that it be 0.40 s slower than curve 3 representing relay C at 20 000 A. Curves 4 and 5 of relay B represent the two relay characteristics, both having the same pickup current; however, the protection provided by curve 4 will deteriorate very rapidly as the short-circuit current decreases. Another resulting problem is that the very inverse time characteristic of relay B (curve 4) causes its curve to cross that of relay A (curve 6) at a high level of fault current, so that the selectivity is compromised for currents less than the crossover point. For this particular circuit it would not be too serious, since tripping either circuit breaker would shut down the whole circuit, but it would still nullify the effectiveness of the relays in giving indication as to where the trouble was. If the very inverse time characteristic of relay B was retained, the pickup and time dial setting of relay A would have to be increased (curve 7) in order to be selective with relay B. This would result in much greater damage during a short circuit and illustrates the problem of incorrectly selecting the relay characteristics.

When choosing between two combinations of current-tap and time dial settings, either of which will give a desired operating time at maximum fault current, the combination with the lower current and higher time dial setting is usually preferable because the relay will be more sensitive and faster on low values of fault current. Suppose that an operating time of 0.5 s is desired with a relay connected to 600/5 A current transformers in a circuit with an available symmetrical fault current of 20 000 A. Relays with 10 A tap and 2.1 time dial setting, curve 1, or 16 A tap and 1.6 time dial setting, curve 2 will both give the desired time. But in case of a fault involving only 3000 A, the relay with the 10 A setting would operate in 1.25 s compared with 2 s for the 16 A tap setting. If the current is still further reduced to 2000 A, the first relay will still operate in 2.1 s, but the second one will be very slow, since operation is uncertain when the current is only 1.0 times relay pickup.

Copyright The Institute of Electrical and Electronics Engineers, Inc.
Provided by IHS under license with IEEE
No reproduction or networking permitted without license from IHS Not for Resale

A special problem arises when attempting to coordinate overcurrent devices on opposite sides of a delta-wye-connected transformer. For line-to-line faults occurring on the wye secondary, the available fault current through the transformer will be reduced to approximately 87% ($\sqrt{3}/2 \cdot 100$) of the available three-phase fault current. The highest of the unbalanced line currents on the delta side, however, will be 100% of the value experienced for a balanced three-phase fault, and the overcurrent device in this phase will operate faster relative to the protection on the wye side. The effect that this change in relative operating characteristics has on coordination for line-to-line faults can be examined graphically by shifting the normal plot of the delta-side protective device by the ratio of 0.87:1.0. This technique will be illustrated by an example in 5.8.

5.7.2.2 Instantaneous relays

When two circuit breakers in series both have instantaneous overcurrent relays, their selectivity is dependent solely on their current settings. Therefore, the relays must be set so that the one nearest the source will not trip when maximum available asymmetrical fault current flows through the other circuit breaker. This requires sufficient impedance in the circuit between the two circuit breakers (from cables, transformers, etc.) to reduce the fault current to the relay nearest the source to less than its pickup setting. If this impedance is insufficient, selective operation is impossible with instantaneous overcurrent relays and the opening of both circuit breakers on through faults must be tolerated.

Usually the impedance of a transformer is sufficient to achieve selectivity between an instantaneous relay on a primary feeder and the instantaneous trip coil of a low-voltage secondary circuit breaker. Also, the impedance of open transmission lines may be sufficient to provide the necessary differential in short-circuit current magnitude to permit the use of instantaneous relays at both ends.

Generally, instantaneous relays at opposite ends of in-plant cable systems are not selective because the circuit impedance is too low to provide the necessary current differential.

Applications involving both phase overcurrent and residually connected ground relays should be reviewed carefully to determine that steady-state and transient error currents are below the instantaneous pickup setting of the relay. The instantaneous element in a residually connected scheme may not be able to be set at all due to these transient error currents and are normally not furnished.

Instantaneous attachments are generally furnished on all time-delay overcurrent relays on switchgear equipment so that they will be interchangeable, but they should be employed for tripping only when applicable. The fact that a relay setting study reveals that some of the instantaneous relays must be made inoperative should not be interpreted as a sign of a poorly designed protective system.

Copyright The Institute of Electrical and Electronics Engineers, Inc.
Provided by IHS under license with IEEE
No reproduction or networking permitted without license from IHS Not for Resale

5.7.2.3 Low-voltage circuit breakers

The time–current characteristics for typical low-voltage power circuit breakers with solid-state trip devices are represented by bands of curves shown in figure 5-26. The maximum and minimum operating time curves define the operating characteristic of the trip device. The very narrow bandwidth of the trip characteristic is achieved by the use of high-quality, industrial-grade, solid-state components, and permits several breakers to be closely coordinated without excessively high current or time-delay settings. Long-time delay, short-time delay, and instantaneous and ground-fault characteristics are available as required, and all are individually adjustable in both current and time delay, either by means of discrete tap settings or a continuously adjustable setting. To achieve this level of selectivity, power circuit breakers utilize short-time delay trips. The equipment protected by this breaker must be designed to handle the available short-circuit current for the duration of the short-time delay.

Figure 5-27 shows the relative operating characteristics of two circuit breakers with solid-state trip devices applied in series, and illustrates how selectivity is achieved between circuit breakers having different combinations of long-time, short-time, and instantaneous trip elements. Since all tolerances and operating times are included in the published characteristics for low-voltage circuit breakers, to establish that selectivity exists requires only that the plotted curves do not intersect. The 1600 A switchgear must be braced to withstand the maximum short-circuit current for the duration of the short-time delay setting of 0.1 s (6 cycles) shown in figure 5-27.

It should be recognized that providing selectivity to the load-side devices may result in equipment bus structures being underprotected. The standards for such equipment, ANSI/UL 891-1984 [B21] for switchboards, ANSI/UL 845-1987 [B20] for motor control centers, and ANSI C37.20.1-1987 [B37] for low-voltage metal-clad switchgear, specify a typical withstand time duration of three cycles, whereas the minimum short-time delay time is 0.1 s (6 cycles). Where this condition exists, additional bus bracing will be required or an instantaneous trip must be used.

5.7.2.4 Fuses

Typical power fuse performance curves are shown in figure 5-28. As with low-voltage circuit breakers, the total operating range is described by a band that is formed by two published characteristic curves, the minimum melting time, and the total clearing time. The minimum melting time curve, forming the lower boundary, represents the melting characteristic and is typically plotted to a tolerance of –0% to +20% of time. The total clearing time curve, forming the upper boundary, represents the maximum operating time. In this manner, the manufacturing tolerance and arcing time are all included within the band described by these curves. The total clearing characteristic of a load-side interrupter may need to be coordinated with the minimum melting characteristic of a line-side fuse to prevent any deterioration of its rating or change in its normal opening time.

Copyright The Institute of Electrical and Electronics Engineers, Inc.
Provided by IHS under license with IEEE
No reproduction or networking permitted without license from IHS Not for Resale

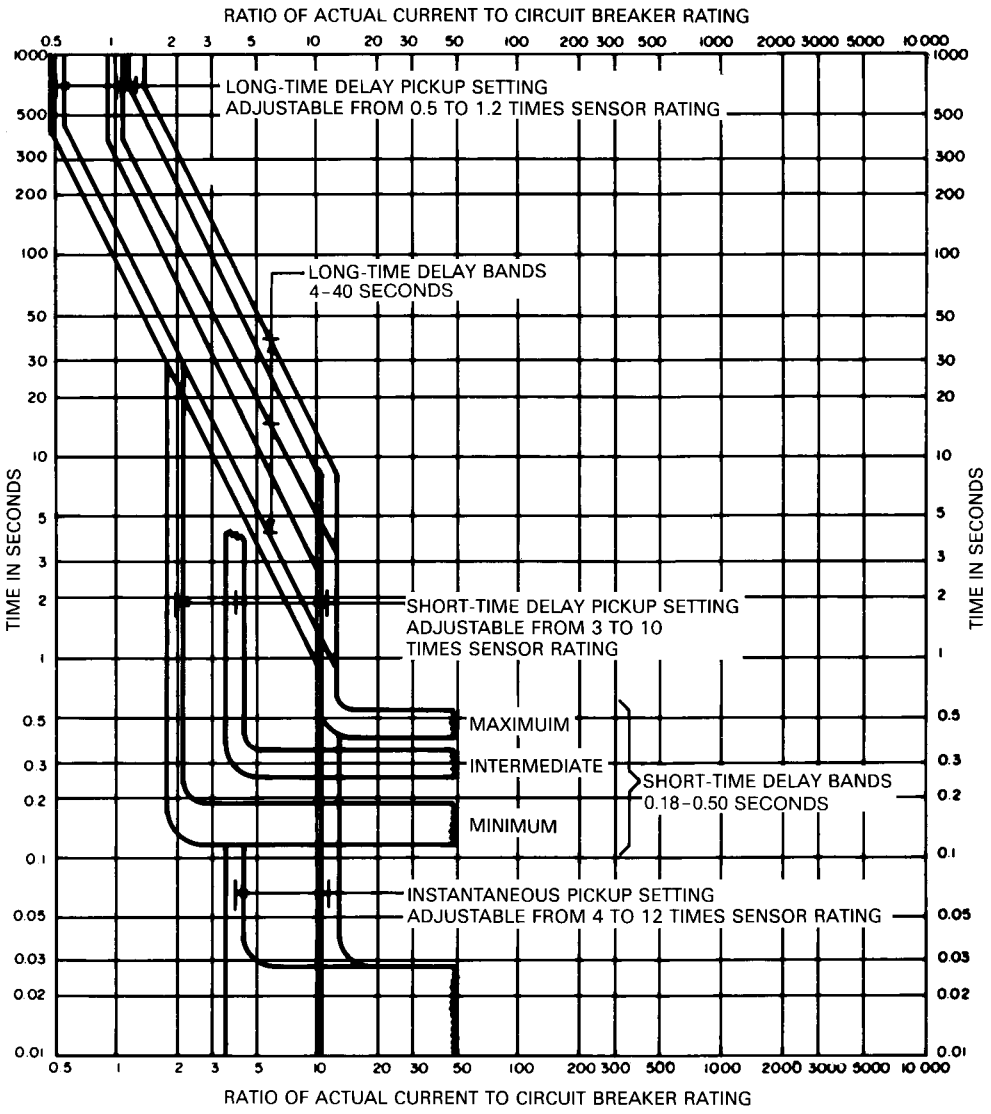

Figure 5-26—Adjustability limits of low-voltage power circuit breaker trip devices (ranges may vary with manufacturer)

5.7.2.5 Ground-fault protection

In a balanced three-phase system, ground-fault coordination is achieved using conventional time–current curves as discussed previously in this subclause. However, care must be exercised when dealing with systems that employ single-phase interrupting devices, such as single-pole breakers or fuses. When a single-phase interrupting device operates, the symmetry of the three-phase system is lost and the use of conventional time–current curves may lead to erroneous conclusions.

Copyright The Institute of Electrical and Electronics Engineers, Inc.
Provided by IHS under license with IEEE
No reproduction or networking permitted without license from IHS Not for Resale

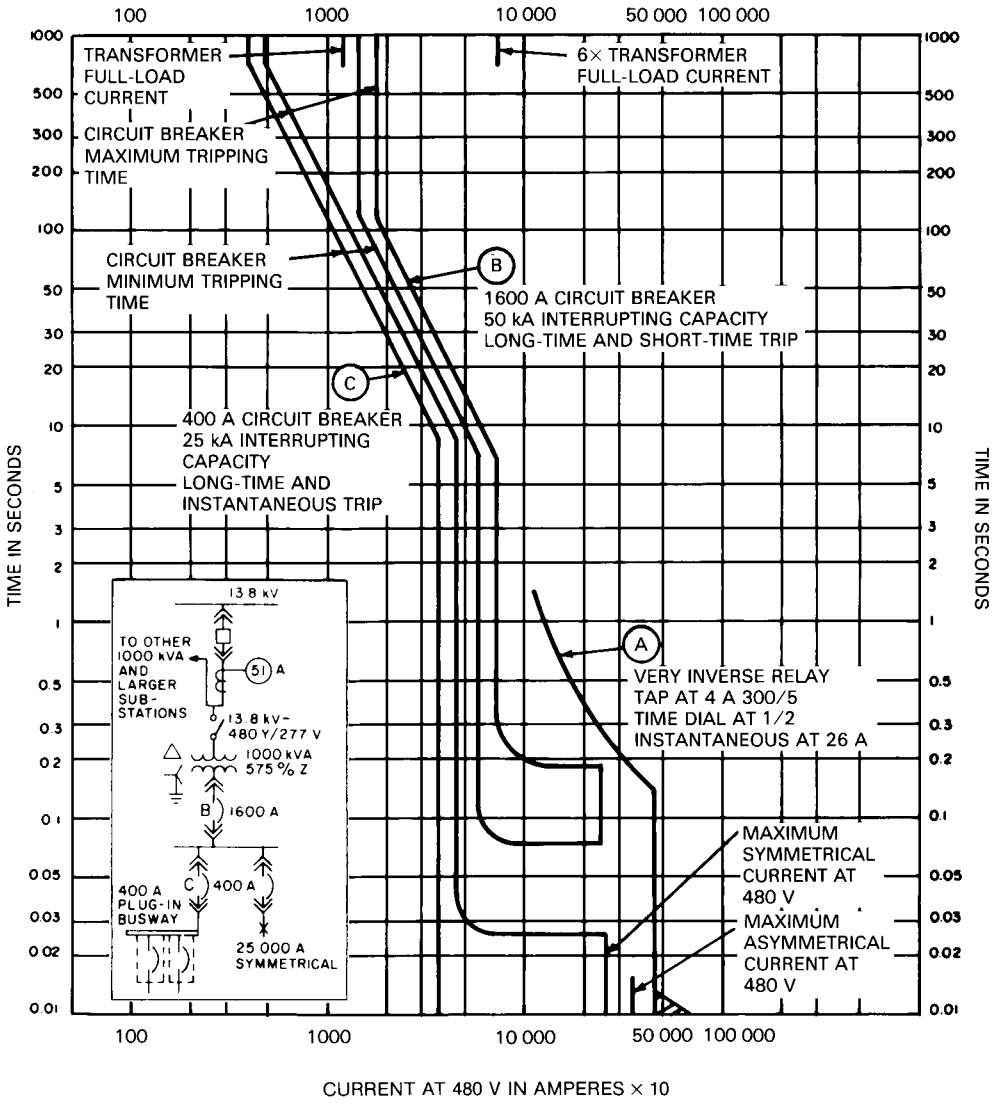

Figure 5-27—Selective tripping time–current characteristic curves (low-voltage power circuit breakers on secondary unit substations)

When, for example, the main GFP is selectively coordinated with feeder overcurrent devices, as shown in figure 5-29, a feeder fault to ground will cause one fuse to open without operation of the GFP. Although this will not clear the fault from the circuit, the system will remain selectively coordinated when the vector sum of the currents through the other two energized phases is not large enough to trip the GFP.

The addition of a second level of sensitive GFP devices and devices that open all three poles of the circuit to each load-side feeder or branch could improve the coordination significantly.

Copyright The Institute of Electrical and Electronics Engineers, Inc.
Provided by IHS under license with IEEE
No reproduction or networking permitted without license from IHS
Not for Resale

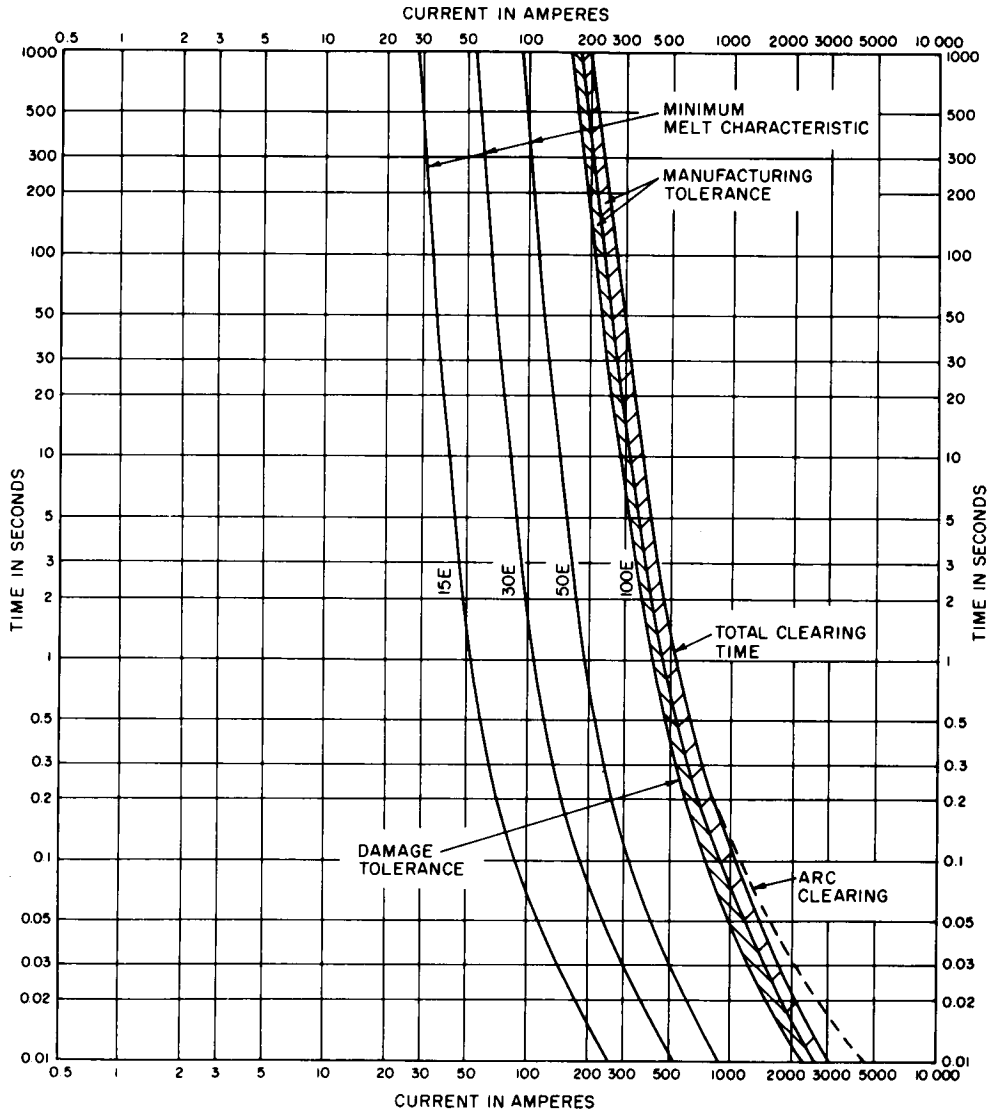

Figure 5-28—Typical time–current characteristic curves of fuses

However, the improvement in operation should be considered in view of the cost and availability of adequately rated equipment.

5.7.3 Preparing for the coordination study [B67], [B80]

The following information will be required for a coordination study:

a) A system one-line diagram showing the complete system details including all protective device ratings and characteristics, and associated equipment;

Copyright The Institute of Electrical and Electronics Engineers, Inc.
Provided by IHS under license with IEEE
No reproduction or networking permitted without license from IHS
Not for Resale

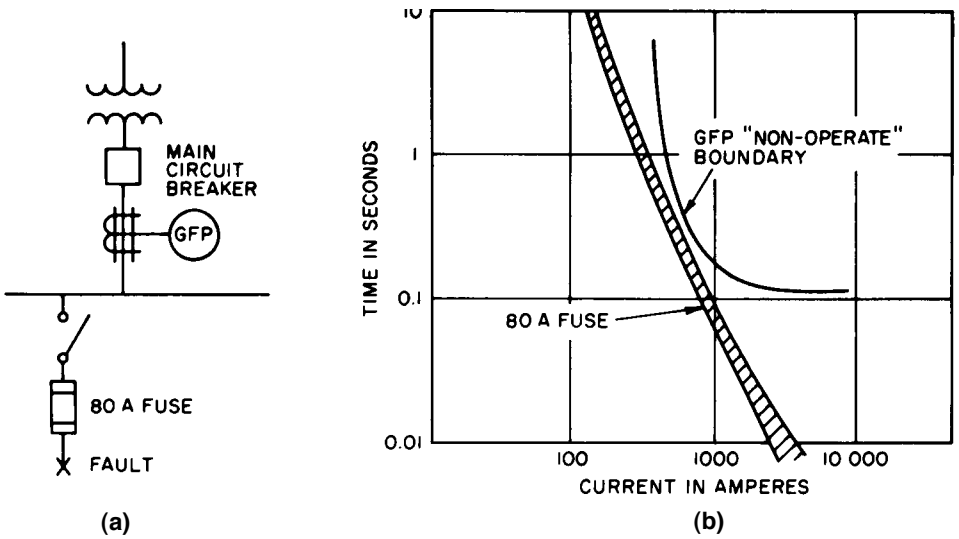

Figure 5-29—One-line diagram and time–current coordination curve misrepresenting proper fault clearing

b) Schematic diagrams showing protective device tripping functions;
c) A short-circuit analysis providing the maximum and minimum values of short-circuit current that are expected to flow through each protective device whose performance is to be studied under varying operating conditions;
d) Normal loads for each circuit and the anticipated maximum and minimum operating loads and special operating requirements;
e) Machine and equipment impedances and all other pertinent data necessary to establish protective device settings and to evaluate the performance of associated equipment, such as current and potential transformer ratios and accuracies;
f) All special requirements of the power company intertie, including the time–current characteristic curve of the utility protection immediately line-side from the system;
g) Manufacturers' instruction bulletins, time–current characteristic curves, and interrupting ratings of all electric protective devices in the power system;
h) NEC [B10] or other governing code requirements as a reference.

5.8 Specific examples—applying the fundamentals

To illustrate some of the many factors that should be considered and the problems that arise when applying the information and principles provided in the previous clauses of this chapter to an actual industrial power system, the completed coordination curves (figures 5-30 to 5-39) for the system shown in figure 5-19 will be discussed in detail. Strong emphasis has been placed on the prime objectives of equipment protection and selective interrupter performance. Relays that are unresponsive to system overcurrents and have no time–current characteristics are not shown on the graphical coordination plots. The selection of settings for these devices is beyond the scope of this text but can be readily determined by referring to the manufacturer's instruction material covering the relays in question.

Copyright The Institute of Electrical and Electronics Engineers, Inc.
Provided by IHS under license with IEEE
No reproduction or networking permitted without license from IHS Not for Resale

The examples given are only intended to be illustrations. Each system encountered in practice should be analyzed in detail, since effective protective-device selection and coordination must apply to a specific situation and not a general case.

5.8.1 Setting and coordination of the 13.8 kV system relaying

5.8.1.1 Primary feeders supplying transformer

The overcurrent relays applied on the 13.8 kV circuits that energize load center distribution transformers provide the dual function of primary protection for phase and ground faults occurring on the 13.8 kV cable and transformer primary winding, and backup protection for faults normally cleared by the secondary devices. Since backup protection requires selective tripping with the secondary main circuit breaker, the primary protection is usually compromised to the extent necessary to obtain selectivity. This compromise can be minimized by selecting a relay characteristic that follows the time–current characteristic of the secondary device as closely as possible.

As shown in figure 5-37, the overcurrent relays (Device 50/51) chosen for feeders E, G, and J have an extremely inverse characteristic, and the settings provide a curve that ensures selective tripping with the secondary circuit breaker over most of the range of secondary fault current. A margin of 0.22 s (0.30 minus 0.08) between the upper edge of the secondary main circuit breaker trip curve and the relay curve at the maximum secondary fault current level is recommended. An intersection or crossover with the secondary circuit breaker occurs at midrange of fault current, as shown in figure 5-37, for relay G, and this is regarded as an acceptable compromise in order that the transformer would be fully protected within its withstand limits for all types of faults. The transformer withstand limits are plotted on the curve for three-phase faults, and also as the equivalent current (0.58 per unit) appearing in the primary protective device for secondary line-to-ground faults when the secondary neutral is solidly grounded. The same degree of protection on secondary line-to-ground faults is not provided for the transformers supplied by feeders E and J, since the primary relays are set higher to accommodate the other connected loads. If closer protection is desired, a separate primary device located ahead of the transformer having trip characteristics to provide protection within the limits specified by ANSI could be provided. Installation of separate protection ahead of these transformers having a trip characteristic no higher than that shown for relay G could correct the problem. Clearing could be accomplished either by a separate interrupter ahead of each transformer (not shown) or by transfer tripping of circuit breakers E and J.

The primary relay pickup or tap value setting is based on three considerations:

a) To enable the feeder and transformer to carry its rated capability plus any expected emergency overloading;
b) To provide for selectivity with the transformer secondary circuit breaker;
c) To provide protection for the transformer and cable within the limitations set forth in the NEC [B10], Articles 450-3 and 240-100.

The shift in the trip characteristics of relay G demonstrates the relative performance of the primary and secondary protective devices for a secondary line-to-line fault. As compared to a

Copyright The Institute of Electrical and Electronics Engineers, Inc.
Provided by IHS under license with IEEE
No reproduction or networking permitted without license from IHS Not for Resale

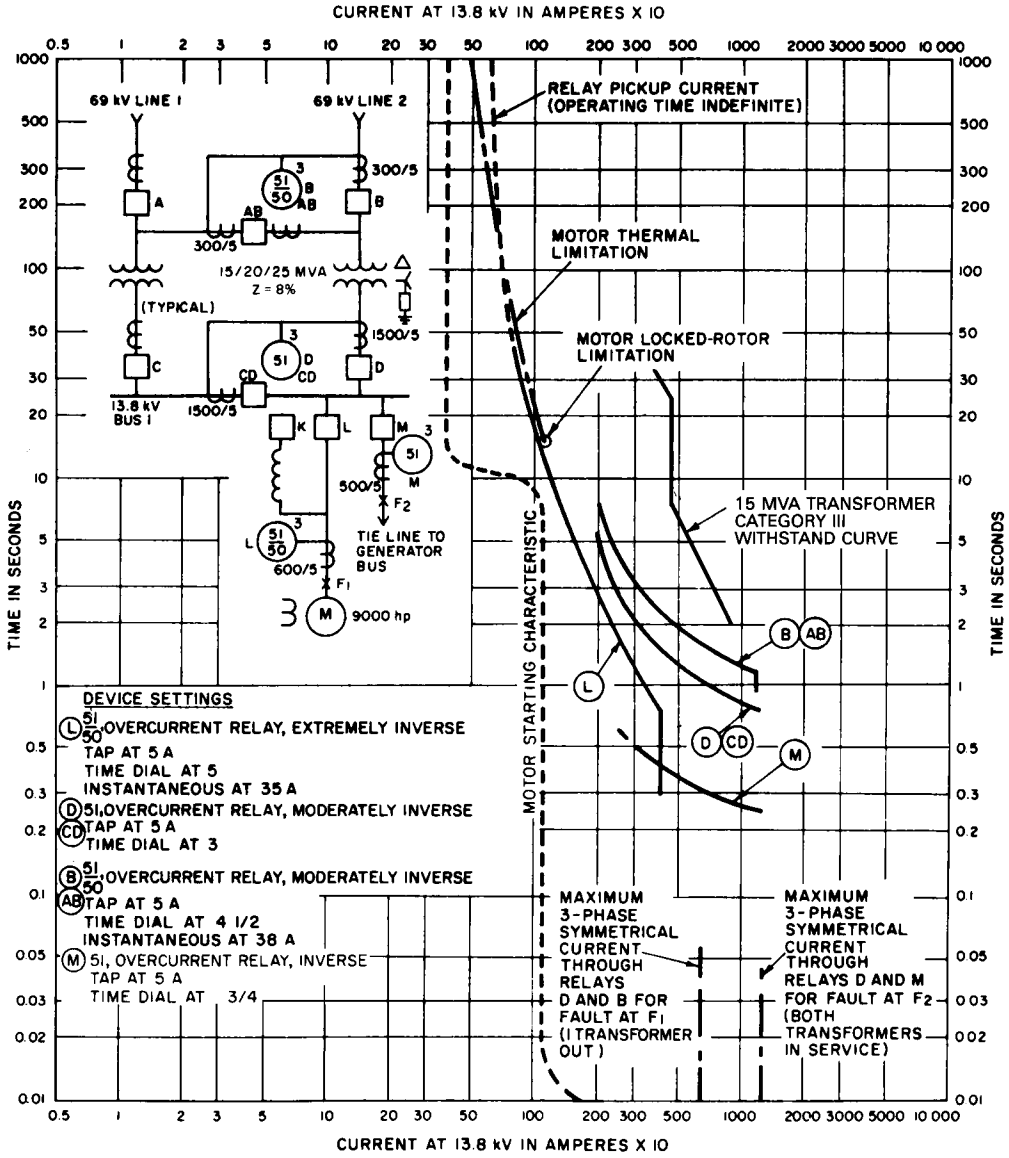

Figure 5-30—Phase-relay time–current characteristic curves for 13.8 kV feeders L and M and incoming line circuits

Copyright The Institute of Electrical and Electronics Engineers, Inc.
Provided by IHS under license with IEEE
No reproduction or networking permitted without license from IHS
Not for Resale

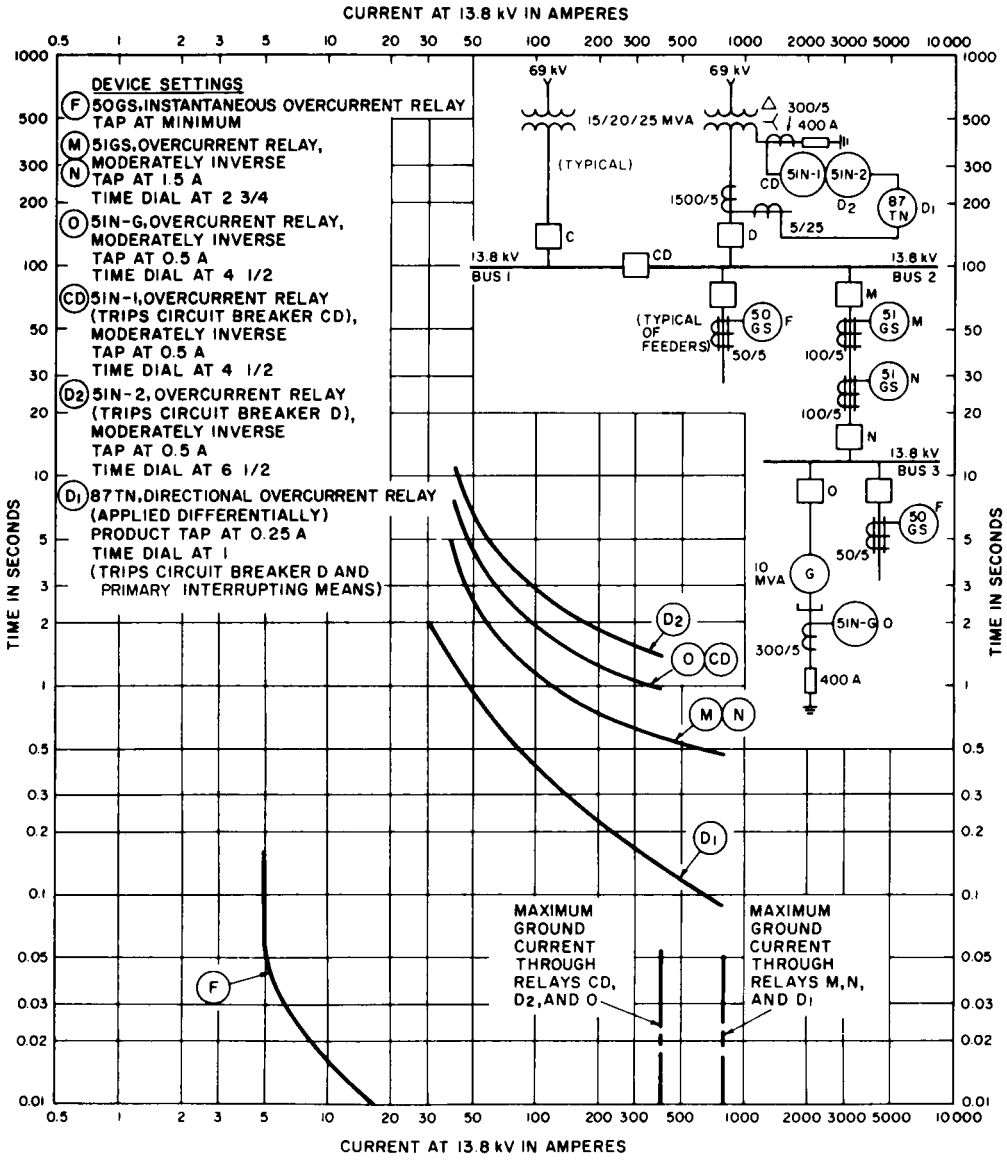

Figure 5-31—Ground-relay time–current characteristic curves for 13.8 kV source and feeder circuits

Copyright The Institute of Electrical and Electronics Engineers, Inc.
Provided by IHS under license with IEEE
No reproduction or networking permitted without license from IHS
Not for Resale

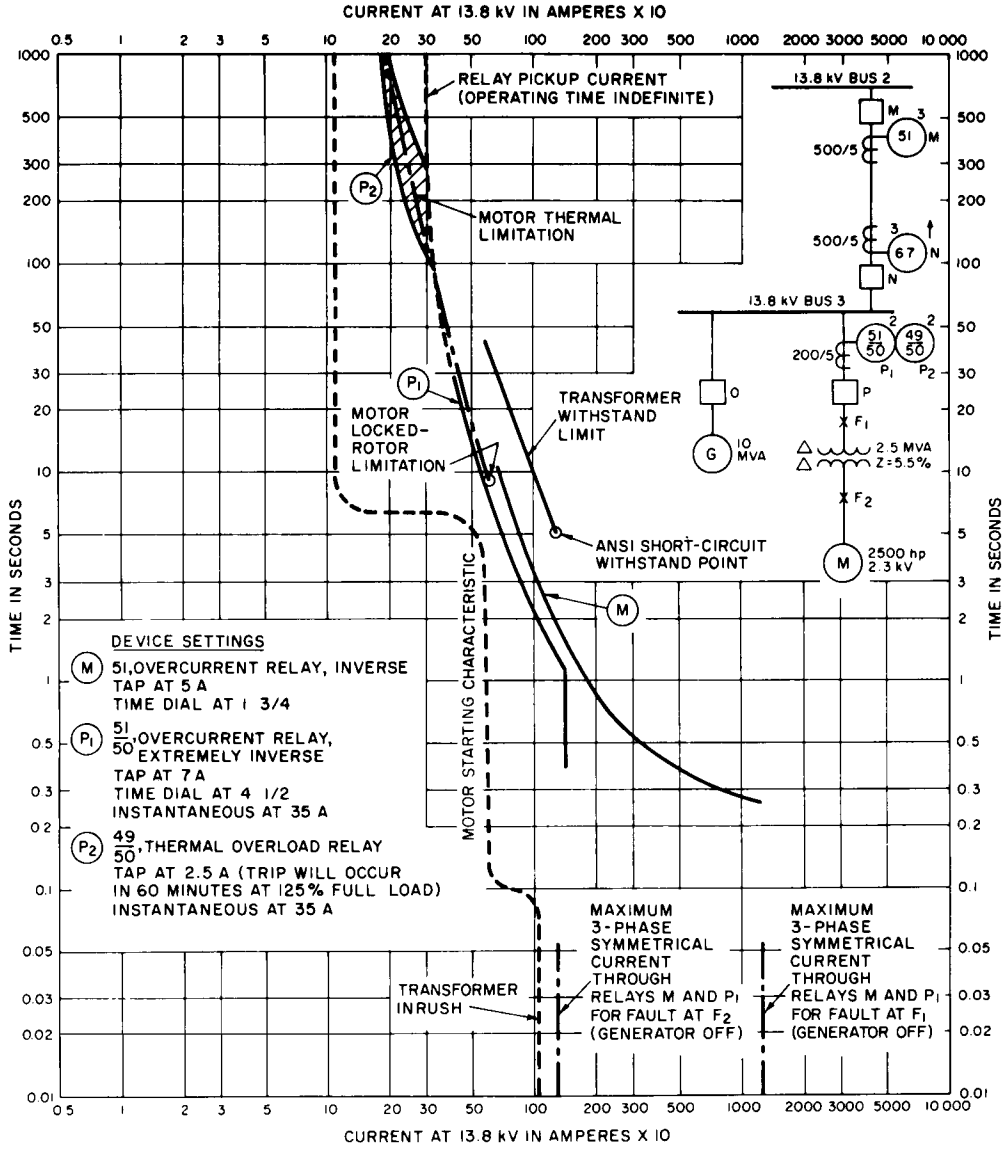

Figure 5-32—Phase-relay time–current characteristic curves for feeder relay at 13.8 kV Bus 3

Copyright The Institute of Electrical and Electronics Engineers, Inc.
Provided by IHS under license with IEEE
No reproduction or networking permitted without license from IHS
Not for Resale

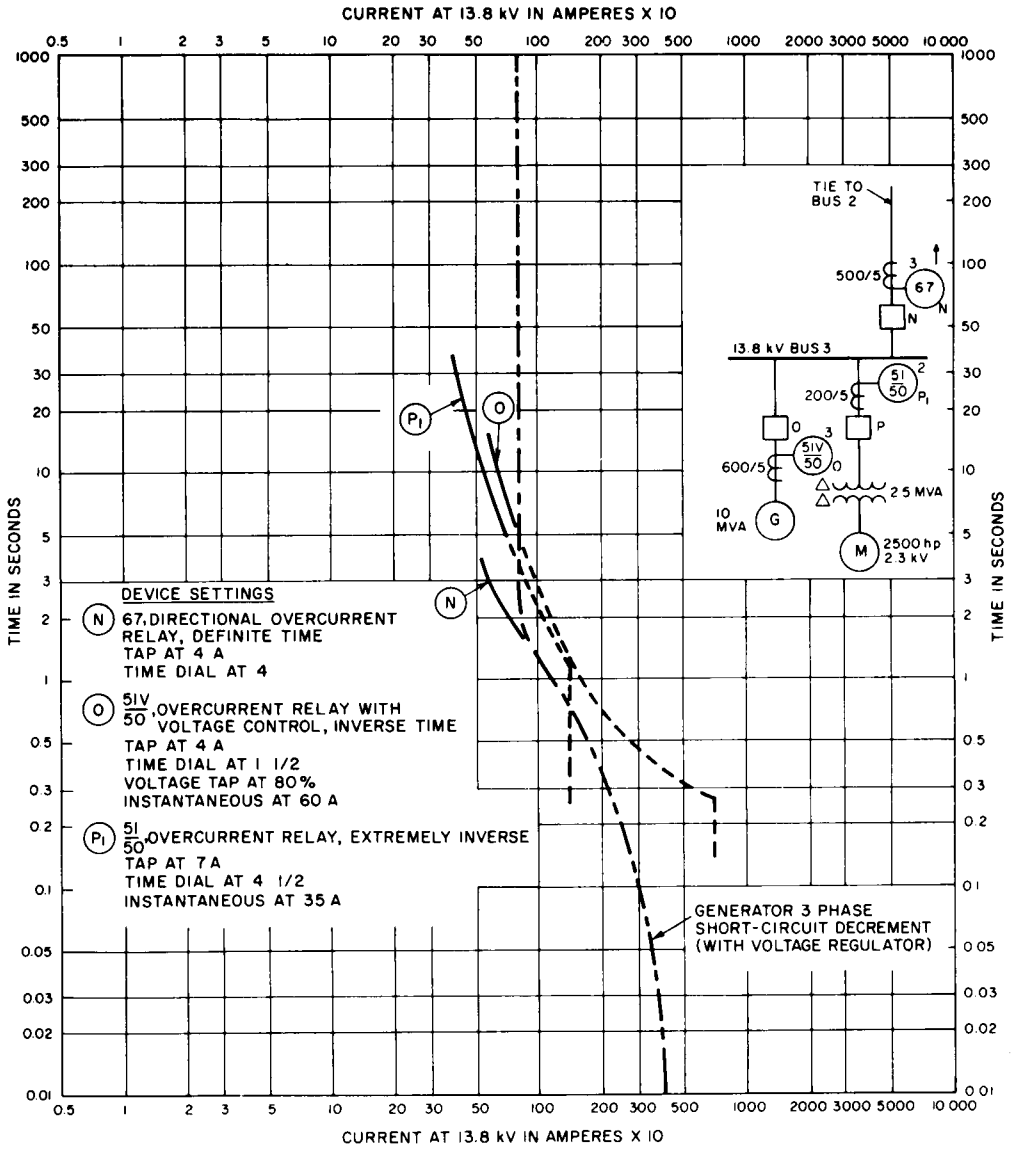

Figure 5-33—Phase-relay time–current characteristic curves for generator relay at 13.8 kV Bus 3

Copyright The Institute of Electrical and Electronics Engineers, Inc.
Provided by IHS under license with IEEE
No reproduction or networking permitted without license from IHS
Not for Resale

three-phase fault, there is a slightly larger range of possible fault currents over which coordination between the primary relay and secondary circuit breaker is compromised. Had the secondary overcurrent device been a relay with the same characteristic as the primary relay, complete selectivity could have been realized, provided a sufficient clearance was maintained between the curves at a current of approximately 25 000 A (28 700 · 0.87) at 480 V.

The instantaneous overcurrent element (Device 50), employed in conjunction with the time element (Device 51), is set to be nonresponsive to the maximum asymmetrical rms fault current that it will see for a transformer secondary three-phase fault. The symmetrical value of transformer let-through current is calculated and an asymmetry multiplying factor applied as determined from the *X*/*R* ratio of the impedance to the point of fault. In addition, a 10% safety margin is added to this calculated setting. When the relayed feeder is energizing more than one transformer, the magnetizing inrush of the transformer group may be the limiting factor for the instantaneous trip setting.

In figure 5-35 the overcurrent relays (Device 50/51) for feeders H and I are set to operate selectively with the totalizing relay at the maximum expected 2.4 kV fault current with about a 0.4 s delay between curves. The instantaneous element is set to pick up above the 2.4 kV system asymmetrical fault availability. The pickup setting and characteristics of the extremely inverse relay afford excellent protection of the transformer by staying below the damage curve at all current levels.

For feeders serving relatively small transformers, such as the 750 kVA transformer energized by the bifurcated feeder from circuit breaker J, the short-time thermal withstand capability of the selected cable size should be checked. The full-load rating of this transformer is 31.4 A at 13.8 kV, and a No. 8 three-conductor cable of approximately 45 A capacity may have been selected as adequate. A plot of the thermal withstand limit, as shown in figure 5-40, reveals that the No. 8 cable could be damaged over its length for a 13.8 kV fault exceeding about 3000 A (90 000 A at 480 V). To prevent this possibility, a No. 1 size cable should be selected.

Sensitive and prompt clearing of ground-faults is possible on all 13.8 kV feeders with the application of the zero-sequence-type current transformer surrounding all three-phase conductors and the associated instantaneous current relay (Device 50GS). Ground-fault sensitivity on the order of 4–10 A is achieved with this combination, depending on the type of relay used. No coordination requirement exists with load-side devices, since these feeder circuits energize transformers with delta-connected primary windings, and ground-faults on the secondary side do not produce zero-sequence current in the primary-side feeder circuit. The ground relaying is shown in figure 5-31.

5.8.1.2 Motor protection

Figure 5-32 shows the degree of overload protection provided for the 2500 hp 2.3 kV motor energized through the 2500 kVA transformer from 13.8 kV bus 3. The relaying as applied should protect both the transformer and the motor.

The replica-type thermal relay (Device 49/50) has a tap setting that will trip the circuit breaker when the motor load current is sustained at 125% of rating for a period of 60 min.

Copyright The Institute of Electrical and Electronics Engineers, Inc.
Provided by IHS under license with IEEE
No reproduction or networking permitted without license from IHS Not for Resale

This pickup setting complies with the NEC [B10], Article 430-32, since the machine has a 1.15 service factor. The thermal relay operating characteristic is represented as a band in which the lower limit signifies the operating time when the overload occurs after a period of 100% load, and the upper limit signifies the operating time when the overload occurs following zero loading.

The setting for the time element of the phase overcurrent relays (Device 50/51) at breaker P is determined by the normal starting time and starting-current requirement for the motor and its locked-rotor thermal limitation. If the permissible locked-rotor time is greater than the required accelerating time, as in the example shown, the overcurrent relay can be set for locked-rotor protection. The pickup or tap setting is usually on the order of 50% of locked-rotor current, and a time lever setting is best determined by several trial starts under actual conditions. For some motor designs, the allowable locked-rotor time may be less than the required accelerating time, and for such conditions an overcurrent relay supervised by a zero-speed switch may be required for locked-rotor protection.

The pickup setting of the instantaneous element of the thermal and phase overcurrent relays at breaker P is determined by the transformer magnetizing inrush current. Although the magnitude of the inrush current is shown plotted at its approximate minimum possible level of 10 times full load, an actual relay setting of 12 to 14 times transformer full-load rating should normally be adequate, but can be increased if pickup occurs during trial starts.

The Device 50/51 overcurrent relays also provide primary phase-fault protection for the feeder cable and transformer, and for this reason two relays are applied. The instantaneous ground sensor relay, Device 50GS (not shown), set at a minimum tap, completes the protection for this circuit.

Figure 5-30 illustrates the overcurrent relaying selected for the 9000 hp 13.2 kV synchronous motor. An extremely inverse characteristic, same as for the 2500 hp motor, is preferred for Device 50/51, for locked-rotor protection, and for cable and motor fault backup protection. Although backup overload protection is also provided by the 160% pickup setting of the time element of Device 50/51, its trip characteristic crosses over the motor thermal damage curve and does not afford complete protection in the light overload region. The stator winding temperature relay (Device 49), whose operating characteristics are not customarily plotted on the time–current curves and which is set to trip rather than alarm, will protect the machine in the region where Device 50/51 does not. The time dial setting falls within the limits of allowable locked-rotor time and required motor-starting time. Since the motor-starting inrush current is limited by the starting reactor, the setting for the instantaneous element of Device 50/51 is based on the asymmetrical current that may be contributed by the motor to a fault on an adjacent circuit. This current is calculated from the subtransient reactance of the machine, and 1.6 and 1.1 multiplying factors are applied to allow for asymmetry and a safety margin.

5.8.1.3 Generator protection

The 10 MVA generator connected to the 13.8 kV bus 3 has a phase-overcurrent relay with voltage control (Device 51V) applied as backup protection for three-phase faults occurring on the 13.8 kV bus, or on feeder circuits connected to the bus, including the generator circuit.

Copyright The Institute of Electrical and Electronics Engineers, Inc.
Provided by IHS under license with IEEE
No reproduction or networking permitted without license from IHS Not for Resale

The voltage control or voltage restraint feature of the device permits moderate overloads of the machine without tripping but have increased sensitivity on system faults [B22]. The instantaneous element for this relay is set above the generator contribution including dc offset to back up the differential relays for faults into the machine from the system. Additional protection for phase-to-phase and phase-to-ground faults is provided by the negative-sequence relay (Device 46) and the ground relay (Device 51G).

Figure 5-33 illustrates the coordination requirements for the circuits connected to the 13.8 kV bus 3. The generator output under external fault conditions is plotted as a dashed line. The directional overcurrent relay (Device 67), applied at circuit breaker N as backup to the pilot-wire relaying, has a pickup setting that permits full loading of the generator over the tie line. A time lever setting is used that provides selectivity with the 13.8 kV feeder relays of buses 1 and 2 to the extent allowable by the generator short-circuit current, which is too low in comparison to the system contribution to permit coordination in every case.

The plotted inverse characteristic for the voltage-controlled overcurrent relay (Device 51V) at circuit breaker O is in effect only when the bus voltage is 80% of normal or less. This level of voltage can be expected for 13.8 kV feeder faults, and the relay operating time has to coordinate with the overcurrent relays on circuit breakers P_1 and N. The current pickup or tap setting is approximately 115% of generator rated output.

5.8.1.4 Cable tie circuit protection

The primary protection for the cable tie circuit between buses 2 and 3 is line differential, using pilot-wire type relays (Device 87L) at each end of the line. This relay is instantaneous and sensitive to phase and ground faults occurring only within the area zoned by the current transformers. For this reason, coordination with other relaying is not required.

Backup phase-fault protection is provided by the overcurrent relay (Device 51) applied at circuit breaker M, and the directional overcurrent relay (Device 67) applied at circuit breaker N. The tap setting for relay M would be selected near 100% of circuit cable ampacity, and the time lever setting is selected to obtain selectivity with the characteristics of the longest delay overcurrent relay it overlooks, which is relay P_1 on feeder P. This relay characteristic is plotted in figure 5-32. The time lever setting provides a coordinating time interval of 0.6 s at the current setting of the instantaneous element.

The selection of a directional overcurrent relay at location N in place of a nondirectional type is necessary because of the limited fault-current contribution from the generator as contrasted to that supplied from the utility source. The directional characteristic permits a setting that is sensitive to the generator contribution. If relay N were nondirectional, its setting would have to coordinate with relay P_1.

5.8.1.5 Main substation protection

The 13.8 kV main buses 1 and 2 are primarily protected by bus differential relaying (Devices 87B1 and 87B2). Backup protection is provided by the overcurrent relays (Device 51) in a partial differential scheme so that a fault on one bus feeder will be selectively isolated. The

Copyright The Institute of Electrical and Electronics Engineers, Inc.
Provided by IHS under license with IEEE
No reproduction or networking permitted without license from IHS Not for Resale

setting for the Device 51 relay is plotted in figure 5-30 and identified as relay D. Relay D must be selective with the feeder relay having the longest time delay connected to buses 1 or 2 and the tie line feeder relay M. Its pickup setting is approximately 140% of the maximum force-cooled rating of one transformer, and its time lever setting provides a 0.4 s delay interval with relay M at the maximum fault-current level.

The main transformers are individually protected by transformer differential relaying (Device 87T) and, as backup protection, overcurrent relays (Device 51/ 50) are applied at the 69 kV level and connected also in a summation arrangement. This relay is identified as relay B in figure 5-30, and its tap setting is also at 140% of the maximum rating of each transformer. The time lever setting provides a suitable delay interval with relay D at the maximum simultaneous fault-current value that can be seen by both relays. The instantaneous element supplied with relay B is set above the maximum asymmetrical current that can be seen by relay B for a 13.8 kV fault, which occurs with one transformer out of service.

The relay settings now established at the 69 kV main substation entrance must be reviewed with the power company to ensure that their line-side protective devices will be compatible. In some cases it may be necessary to compromise selectivity to some degree or to establish settings with shorter coordinating intervals in order to meet the maximum clearing times permitted by the utility. Also, the setting of Device 67 that looks out into the utility system should be discussed with the utility to assure compatibility with their system operating procedures.

5.8.1.6 Ground-fault protection

Each of the three wye-connected neutrals in the 13.8 kV system are connected to ground through a 19.9 Ω resistor that limits the ground-fault current available from any transformer to 400 A. Depending on the number of transformers in service, a range of 400 A minimum to 1200 A maximum is therefore available for ground relay detection. The sensitivity of the relays applied and their associated current transformers provide a detection capability less than 10% of the 400 A minimum available.

The ground overcurrent relay settings are plotted in figure 5-31. All transformer feeders and the 13.8 kV motor feeder are protected with instantaneous current relays energized by zero-sequence-type current transformers of 50/5 ratio. In terms of primary current, their pickup sensitivity will be on the order of 5–10 A, depending on CT performance.

The tie-line ground relays at circuit breaker locations M and N are necessarily time delayed and have identical settings, since selective tripping between the two is not important. Their time dial setting provides coordination with the main transformer neutral differential relay (Device 87TN), designated as relay D_1, for faults in the zone that include the transformer secondary and the line side of the main 13.8 kV circuit breakers.

The next level for selective tripping is relay O, the ground relay in the generator neutral. Its setting coordinates with 0.4 s delay with relays M and N at the maximum 400 A level. Likewise, relay CD in each transformer neutral is only required to be selective with relays M and N. Its setting, therefore, can be the same as that selected for relay O at the generator.

--`,,`,,`-`-`,,`,,`,`,,`---

Copyright The Institute of Electrical and Electronics Engineers, Inc.
Provided by IHS under license with IEEE
No reproduction or networking permitted without license from IHS Not for Resale

Relay D_2, also in the transformer neutral, must be delayed 0.4 s beyond relay CD at the 400 A ground-fault level. Relay CD trips the bus tie circuit breaker and thus establishes the location of the fault as being on one side or the other of the bus tie. Whichever transformer is still energizing the faulted bus section will then be tripped off by relay D_2. This relay should de-energize both primary and secondary windings of the transformer.

5.8.2 Setting and coordination of the 2.4 kV system relaying

5.8.2.1 Phase protection

Figure 5-35 is the plot of the phase protection for 2.4 kV bus 3 that serves motor loads including the 1250 hp induction motor, representing the largest connected machine. The motor thermal damage curve, which must serve as the starting point for properly designing the protection for any machine, has been plotted as shown. The motor thermal overload relay (Device 49) satisfactorily matches the machine damage characteristics on overloads up to approximately 200% of full-load rating and has been set to protect the motor against sustained overloads. Beyond this point, the extremely inverse time relay (Device 51) matches the motor-damage curve better than Devices 49 and 50 and provides excellent protection in the locked rotor current region. The 2.4 kV motor circuit fuse is present to protect the contactor by interrupting heavy fault currents and is sized to withstand locked-rotor current at 10% overvoltage.

The main and tie circuit breaker partial differential overcurrent relays have been set to be selective with the motor protection and permit normal expected bus loading. A sufficient delay in relay operating time has been provided to allow the contactor (or overload relay) to selectively clear moderate faults should the fault occur on a phase or phases that would escape detection by the single overcurrent relay (Device 51), or even on the same phase should the relay fail to operate.

The current-balance relay (Device 46), providing for single-phase protection of the motor, has no time–current operating characteristic which would affect the relay coordination on either balanced or unbalanced overcurrent conditions. It has sufficient built-in delay to permit other relays such as ground relays to operate first when required. A plot of its performance, therefore, is not relevant and does not appear in the time–current curve. For best protection, Device 46 should be set at maximum sensitivity provided nuisance tripping does not result.

The time-delay element of the directional overcurrent relay (Device 67) is set for maximum speed and sensitivity to provide the best protection. The relay should have sufficient delay of 0.1 s minimum for reverse flow of motor contribution current into a primary fault. If an instantaneous element was used for improved protection, it must be set to pick up above the current from the motor.

Figure 5-34 illustrates the protection considerations at 2.4 kV bus 1. Here the setting of the relay at circuit breaker H is dictated by the coordination requirements of the 3750 kVA transformer and leaves the 1500 kVA transformer inadequately protected. This is evident by the fact that the relay curve falls above the transformer damage curve. A 100E primary fuse has been applied to fill this protection void and appears to do so since its clearing time curve falls

Copyright The Institute of Electrical and Electronics Engineers, Inc.
Provided by IHS under license with IEEE
No reproduction or networking permitted without license from IHS Not for Resale

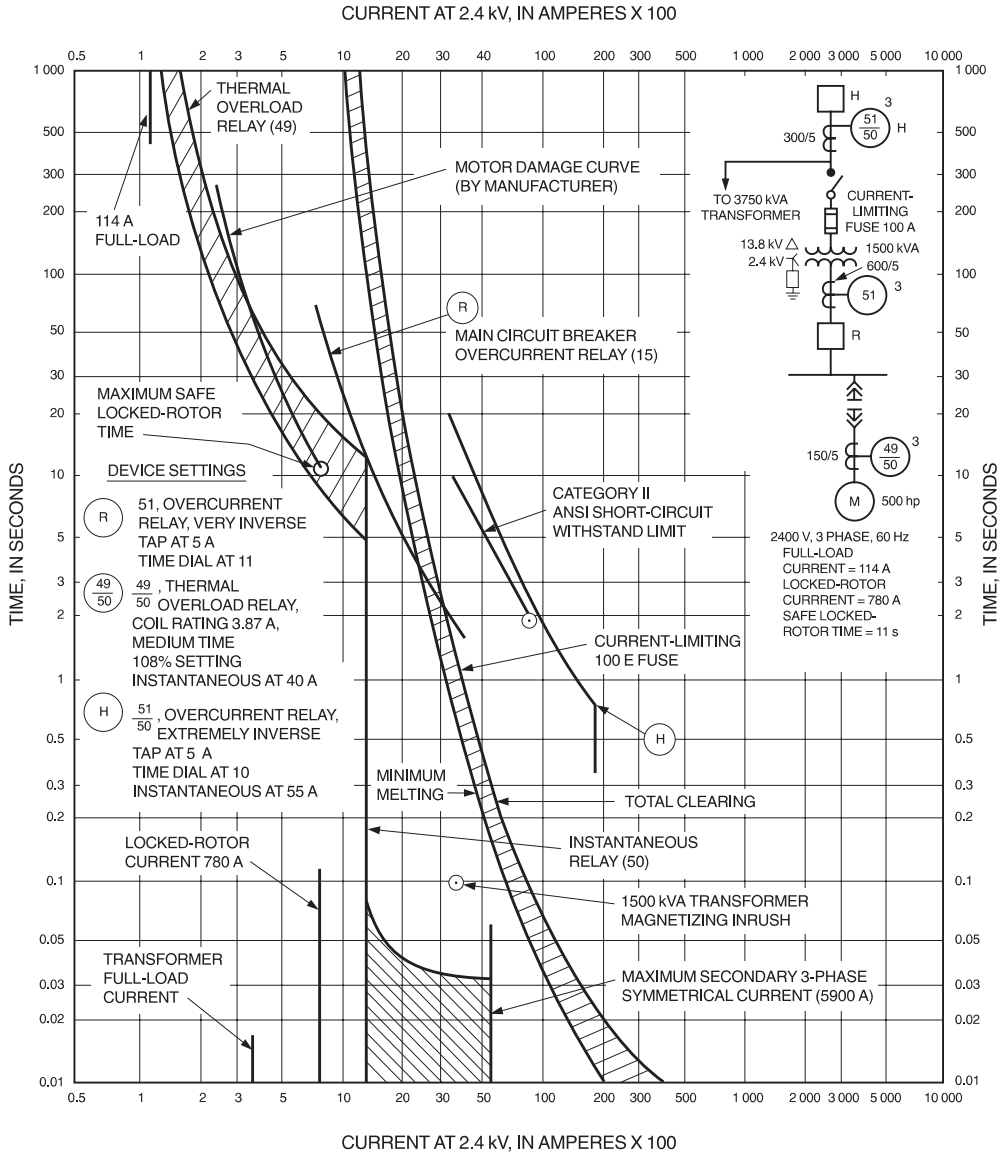

Figure 5-34—Phase-relay time–current characteristic curves for 2.4 kV Bus 1 coordination

Copyright The Institute of Electrical and Electronics Engineers, Inc.
Provided by IHS under license with IEEE
No reproduction or networking permitted without license from IHS
Not for Resale

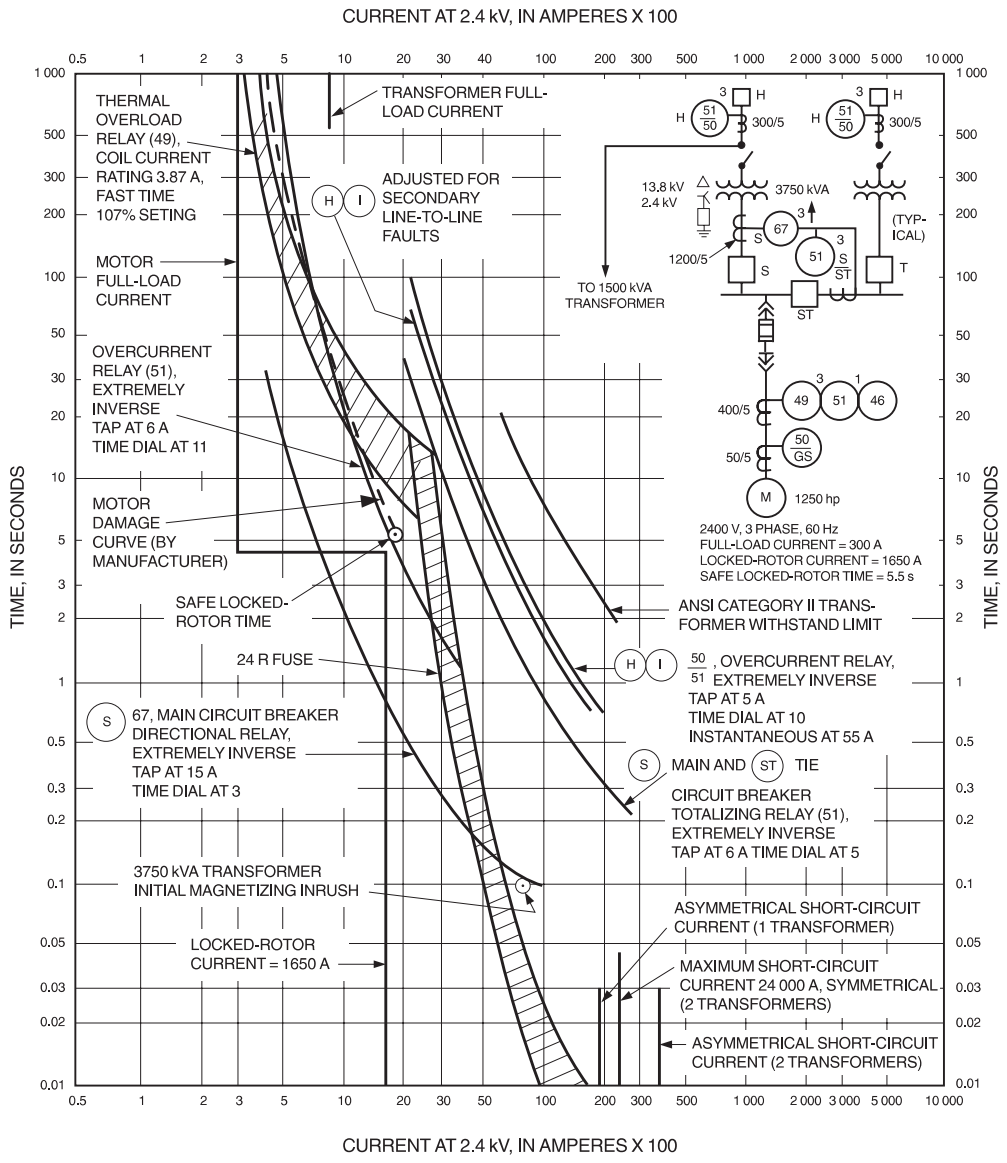

Figure 5-35—Phase-relay time–current characteristic curves for 2.4 kV Bus 2 coordination

Copyright The Institute of Electrical and Electronics Engineers, Inc.
Provided by IHS under license with IEEE
No reproduction or networking permitted without license from IHS
Not for Resale

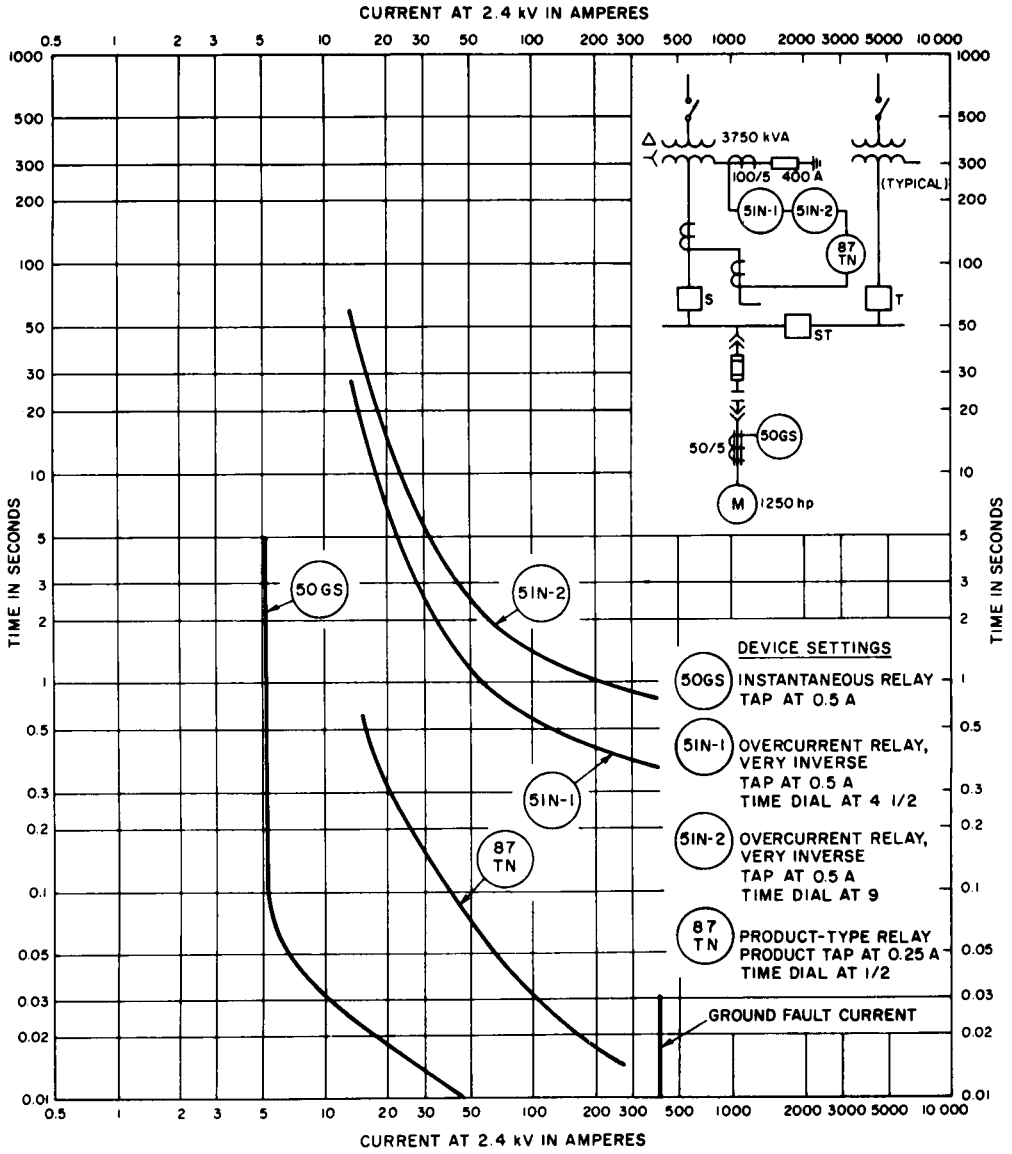

Figure 5-36—Ground-relay time–current characteristic curves for 2.4 kV Buses 2 and 3

Copyright The Institute of Electrical and Electronics Engineers, Inc.
Provided by IHS under license with IEEE
No reproduction or networking permitted without license from IHS
Not for Resale

to the left of the transformer short-circuit withstand curve. Also, it provides sufficient operating delay to withstand expected transformer loading continuously as well as transformer magnetizing inrush for the required 0.1 s. However, the fuse does not completely protect the transformer on low-magnitude (arcing) faults due to the crossover of the fuse-interrupting curve and the transformer-damage curve. If such a failure should occur between the transformer and the secondary main circuit breaker R, some amount of transformer damage may be expected. Improved protection would be provided by using overcurrent relays at the transformer primary terminals connected to transfer trip the circuit breaker H.

The protection illustrated in figure 5-34 for 2.4 kV bus 1 serving the 500 hp motor provides a different approach to locked-rotor protection than that described for the 1250 hp motor. Again, a thermal overload relay installed in each phase has been set to permit continuous operation of the motor at rated current and to provide protection for sustained small overloads. There is, however, no Device 51 to provide protection for heavy overloads or locked rotor. The thermal damage curve intersects the maximum operating time of the overload relay at approximately 300% of full-load current; beyond this point the protection is marginal and the motor may sustain some damage. This zone of marginal protection is normally considered economically justifiable on small or noncritical machines. The instantaneous element of the relay is set to pick up above the motor locked-rotor current (including dc component) to avoid nuisance tripping on starting. Because of the small size of the transformer, the contactor is capable of interrupting the available fault current so that current-limiting fuses are not required in combination with it.

With the installation of the primary fuse, protection against motor damage from single-phase operation, such as would occur following interruption by one transformer primary fuse, is provided by the negative-sequence voltage relay (Device 60). The motor-overload relays cannot be expected to provide protection under these unbalanced operating conditions. The main circuit breaker overcurrent relay (Device 51) has been set to provide transformer overload protection and also to be selective with the load-side motor protection and the line-side transformer primary fuse.

5.8.2.2 Ground-fault protection

(See also IEEE Std 242-1986 [B57]). Figure 5-36 illustrates the coordination of the ground-fault protection on 2.4 kV buses 2 and 3. All the feeder circuit breaker ground relays (Device 50GS) operate from zero-sequence-type current transformers and are set to trip instantaneously with maximum sensitivity.

The time-delay product type (Device 87TN) detects ground faults only between the transformer and the main circuit breaker and functions to trip the appropriate primary feeder circuit breaker and secondary main circuit breaker. Since it is not necessary to coordinate this relay with the feeder ground relays, it is set on the minimum time lever for fastest possible operation.

The relay 51N-1 must coordinate with relays 50GS and 87TN to trip the 2.4 kV tie circuit breaker ST for bus faults to ground or as backup to the 2.4 kV feeder circuit breaker ground relays. Relay 51N-2 must be selective with Device 51N-1. This is the final relay to operate on

Copyright The Institute of Electrical and Electronics Engineers, Inc.
Provided by IHS under license with IEEE
No reproduction or networking permitted without license from IHS Not for Resale

bus faults and must wait for the tie circuit breaker to open and then trip the appropriate main circuit breaker to isolate the fault.

The ground-fault protection for 2.4 kV bus 1 is not plotted since it is a high-resistance grounded system that does not trip on a line-to-ground fault. The voltage relay (Device 59N) senses the presence of a ground fault on the system, which is evidenced by a current flow and voltage drop through the resistor R, and operates an alarm.

5.8.3 Setting and coordination of the 480 V system protective equipment

5.8.3.1 Phase overcurrent protection

a) *480 V radial system*. 480 V buses 4 and 6 are both radially fed distribution systems feeding motors or other loads, such as lighting or heating. Figure 5-39, showing bus 4, illustrates the protection and selectivity considerations which should be evaluated.

1) The motor control center (MCC) feeder circuit breaker series trip devices must provide overload and short-circuit protection for its feeder cables and the MCC bus structure, and should also be selective with the branch-circuit fuses or molded-case circuit breakers for all values of fault current up to the maximum available at the MCC bus. This is accomplished by using long-time and short-time series trip devices on the feeder circuit breaker. The minimum time-delay band setting on the short-time characteristic is selective with the total-clearing characteristic of the molded-case circuit breaker. However, if the branch circuit device were a 100 A fuse, for example, some selectivity is lost since the fuse curve overlaps with the knee of the short-time device curve. A constant I^2t function on the short-time trip may be available which effectively cuts off the knee of the curve and when used will provide selectivity with the fuse. As previously discussed in 5.7.2.3, it is necessary that the MCC bus structure withstand the available fault current for the duration of the short-time delay setting, shown in figure 5-39, as 0.18 s (11 cycles). Overload protection is provided by the long-time element of the breaker and by the fuse when selected to pickup at the lesser of the feeder cable ampacity or 125% of the MCC load.

   It would be difficult, if not impossible, to obtain selectivity between the molded-case circuit breaker (or a fuse) and the instantaneous tripping characteristic of a solid-state trip device. The solid-state trip devices are sensitive to rms current and are activated by a voltage signal that is proportional to the instantaneous current magnitude. In contrast, a molded-case circuit breaker (or a fuse) requires a finite amount of let-through energy (I^2t) (although not the same amount) to open the circuit interrupter and clear the fault.

2) The main secondary circuit breaker series trip devices must provide overload protection for the load center distribution transformer and short-circuit protection for the 480 V bus and feeder circuit breakers and must also be selective with the feeder circuit breaker series trip devices. This can be accomplished by using long-time and short-time trip devices in the main secondary circuit breaker with the long-time element set to pick up at the maximum permissible

Copyright The Institute of Electrical and Electronics Engineers, Inc.
Provided by IHS under license with IEEE
No reproduction or networking permitted without license from IHS Not for Resale

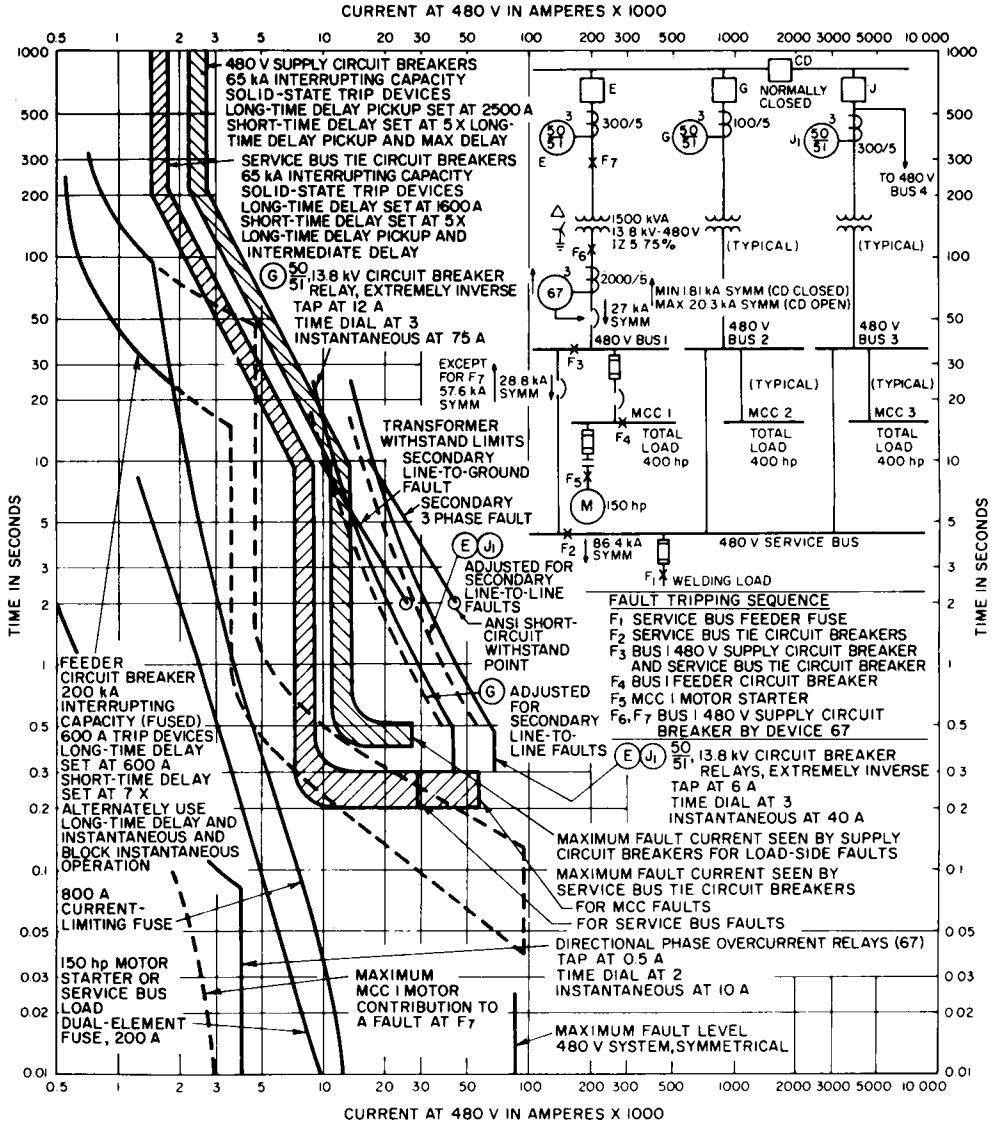

Figure 5-37—Phase-protection time–current characteristic curves for 13.8 kV feeder E, G, and J and 480 V Bus 1, 2, and 3 network coordination

Copyright The Institute of Electrical and Electronics Engineers, Inc.
Provided by IHS under license with IEEE
No reproduction or networking permitted without license from IHS
Not for Resale

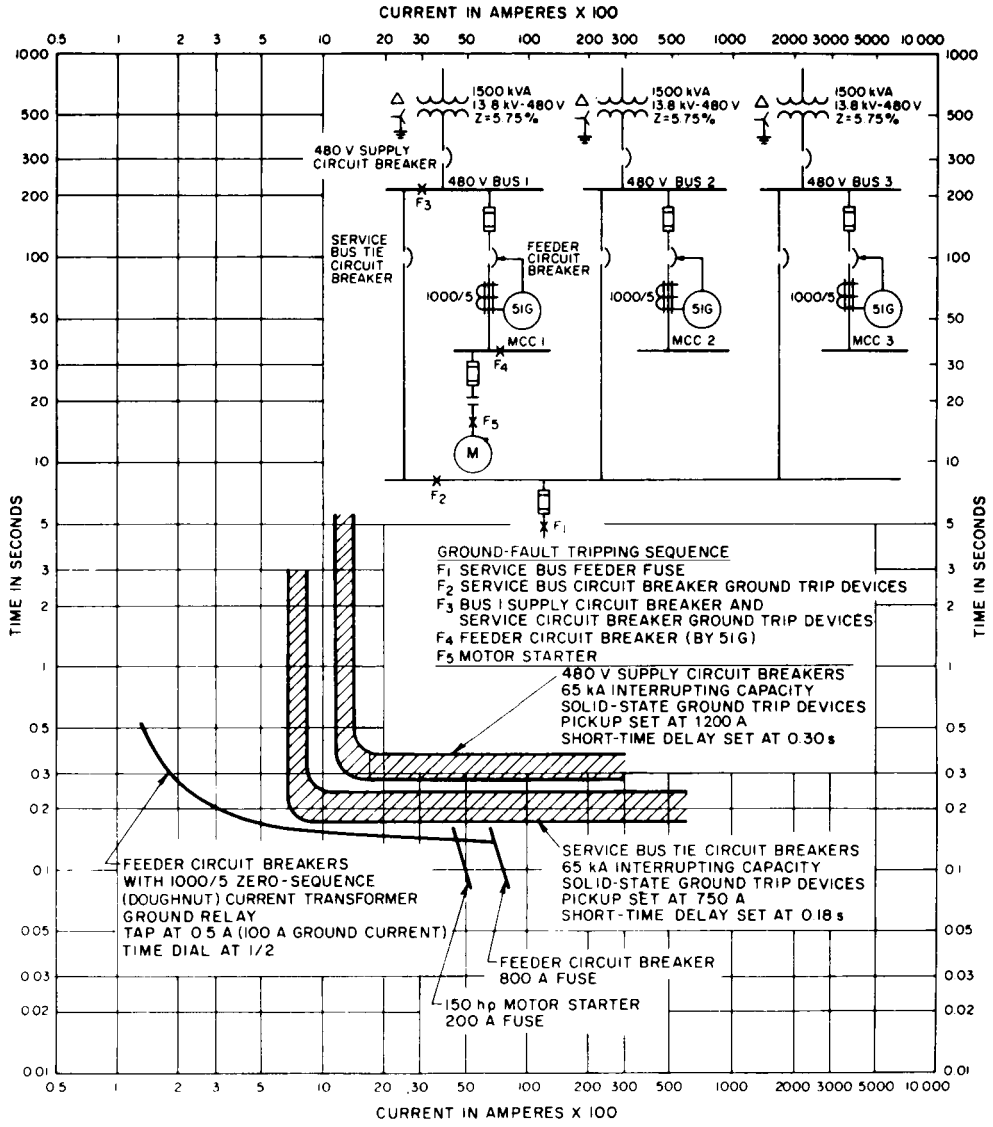

Figure 5-38—Ground-relay time–current characteristic curves for 480 V Bus 1, 2, and 3 network

Copyright The Institute of Electrical and Electronics Engineers, Inc.
Provided by IHS under license with IEEE
No reproduction or networking permitted without license from IHS
Not for Resale

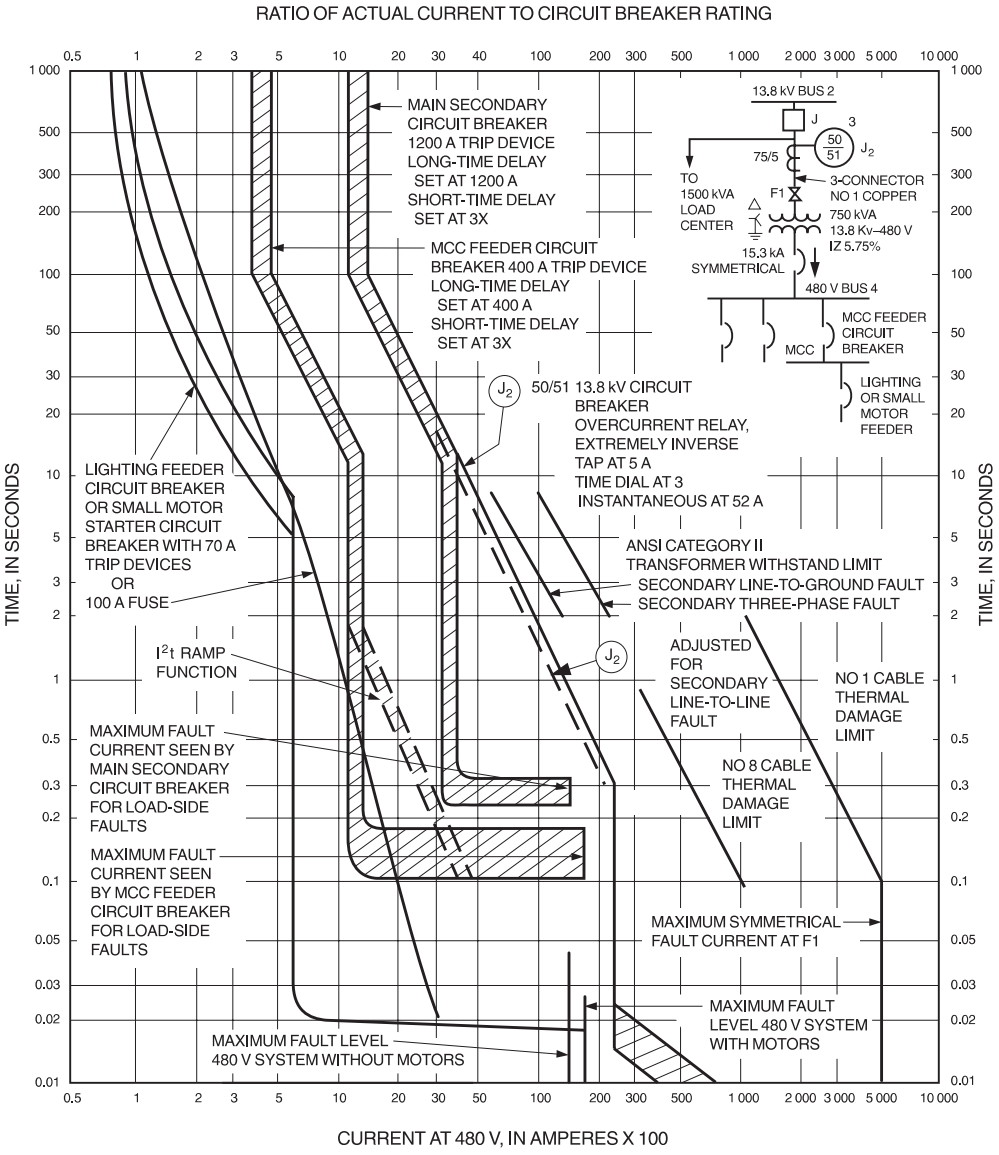

Figure 5-39—Phase protection time–current characteristic curves for 13.8 kV feeder J_2 and 480 V Bus 4 coordination

Copyright The Institute of Electrical and Electronics Engineers, Inc.
Provided by IHS under license with IEEE
No reproduction or networking permitted without license from IHS
Not for Resale

short-time overload capacity of the transformer, and the short-time element set higher than the maximum motor inrush current. Here again, the switchgear (switchboard) bus structure must safely withstand the available short-circuit current for the duration of the short-time delay setting shown in figure 5-39 as 0.32 s (approximately 19 cycles. If the I^2t ramp function is provided on the feeder breaker, it may be necessary to also provide it on the secondary main breaker as well.

b) *480 V network system*. 480 V buses 1, 2, and 3 comprise a typical spot-network system. Figure 5-37, showing these buses, illustrates the protection and selectivity considerations which should be evaluated.

1) Power must not flow out of the network into the supply system as a result of faults in the supply circuits. Directional overcurrent relays (Device 67), operating from current transformers in the secondary connections from each supply transformer, meet this requirement. These relays must be set to trip the associated 480 V main secondary circuit breaker when current flows into the supply system in a time before the other two main secondary circuit breakers open as a result of the operation of their nondirectional protective devices. If the directional relays are equipped with instantaneous elements having directional control (some do not have this capability), the instantaneous elements would be set to pick up above the momentary 480 V induction motor contribution to primary faults so as to avoid an unnecessary opening of the main circuit breakers for trouble on a remote circuit.

2) Faults on buses 1, 2, or 3 or on feeders fed from these buses must be cleared either by the feeder circuit breakers or by the associated 480 V main secondary and service bus tie circuit breakers in a time before the other service bus tie circuit breakers open. This can be accomplished by setting the bus tie circuit breaker and the main secondary circuit breaker trip devices to be selective with the feeder protective devices, as shown in figure 5-37. Selectivity between a service bus tie and the feeder circuit breakers is not achieved when electromechanical trip devices are used. However, when solid-state trip devices are used, the system is selective for all current values.

   Figure 5-37 shows that selectivity between buses 1, 2, and 3 service ties does not exist since their settings are identical. Where continuity of service is essential instantaneous bus differential relays should be considered as the alternate means for providing selectivity between the three buses.

3) Faults on the 3000 A service bus or on feeders fed from this busway must be cleared either by the feeder circuit breakers or by the service-tie circuit breakers before the tie circuit breakers open and cause a complete outage. This is accomplished by the selective trip-device settings (long-time, short-time delay) on the tie and supply circuit breakers. A fault that causes the service bus tie circuit breakers to trip leaves buses 1, 2, and 3 energized and operating, but causes the loads on the 3000 A busway to be lost.

   From the curves, it is not obvious whether the 800 A fuses integral with the feeder circuit breakers on buses l, 2, or 3 are selective with the dual-element

Copyright The Institute of Electrical and Electronics Engineers, Inc.
Provided by IHS under license with IEEE
No reproduction or networking permitted without license from IHS
Not for Resale

200 A motor-starter fuses at the motor control centers. This may be determined by examining the I^2t let-through characteristics of the two fuses. To coordinate satisfactorily, the total clearing I^2t of the 200 A fuse must be less than the melting I^2t of the 800 A fuse. Selective coordination can be achieved by referring to the manufacturers' selective coordination rating tables.

4) Certain modes of operation could result in the 13.8 kV tie circuit breaker CD being open. In such cases a fault on any primary circuit would cause high currents to circulate through this substation as power is transferred between the separated primary systems. The instantaneous setting of the directional overcurrent relay would operate to trip the associated 480 V main breaker since it is not selective with the instantaneous relay of a faulted 13.8 kV breaker that does not serve this substation. If the settings of the time delay and instantaneous elements of the directional relays were changed so as to provide selectivity for primary faults on any 13.8 kV feeder not serving this substation, then selectivity between the solid-state trips of the 480 V main secondary breakers and the directional relay would be lost.

   To ensure selective operation of all the protective devices during the normal mode of operation with the 13.8 kV bus tie circuit breaker CD closed, loss of selectivity must be accepted for certain types of faults should circuit breaker CD ever be opened. With a fault on a remote primary feeder such as the circuit fed by 13.8 kV circuit breaker F, the directional relays on the 480 V main supply circuit breakers of buses 1 and 2 will trip before the relaying on primary feeder F would selectively isolate the fault. A similar situation arises for any remote primary feeder fault with the 13.8 kV tie circuit breaker open. Since this is not the normal mode of operation, it is not considered to be a serious compromise.

c) *480 V double-ended secondary unit substation with normally closed secondary tie.* 480 V bus 5 fed from 13.8 kV breakers E and J is a variation of the 480 V spot network previously discussed. The basic protection considerations in item (2) also apply for this example. The following factors should be considered for optimum protection and coordination:

   1) Directional relays should be applied to the main secondary circuit breakers as described in the discussion for 480 V buses 1, 2, and 3 to selectively isolate primary system faults.
   2) Faults on either bus section or on feeders fed from the bus must be cleared by the feeder circuit breakers or by the bus tie circuit breaker and the associated 480 V main secondary circuit breaker before the other 480 V main secondary circuit breaker operates and causes a complete 480 V outage. This is accomplished by setting the long-time and short-time trip devices of the main secondary circuit breakers to be selective with the bus tie circuit breaker.

Figure 5-37, although specifically representing buses 1, 2, and 3, illustrates the delay sequence that would be used for selectively coordinating the device settings for bus 5 as well.

As in the case of 480 V buses 1, 2, and 3, the I^2t characteristics of the motor starter and feeder circuit breaker fuses should be evaluated to ensure coordination between fuses.

Copyright The Institute of Electrical and Electronics Engineers, Inc.
Provided by IHS under license with IEEE
No reproduction or networking permitted without license from IHS Not for Resale

5.8.3.2 Ground-fault protection

The 480 V spot network and buses 4 and 5 in figure 5-19 are shown as being solidly grounded. At these buses the maximum line-to-ground fault current is virtually equal to the three-phase value; however, the fault impedance and ground-return path impedance increase significantly with the distance from the source, and a much lower-magnitude current will flow. Sensitive relaying should, therefore, be used to ensure that ground-fault currents too low to be detected by the phase overcurrent trip devices are detected and safely cleared.

Common methods employed to provide this protection are as follows:

a) Solid-state ground trip devices integral with feeder, tie, and main circuit breakers;
b) Zero-sequence current transformers which enclose all phase conductors in feeder circuits as described in 5.3.7.2;
c) Relays operating from residually connected current transformers in feeder circuits, tie circuit breakers, and main circuit breakers;
d) Overcurrent relays connected to the secondary of a current transformer sensing the current in the distribution transformer neutral (not illustrated in this diagram).

Very special care is required when applying ground relays to four-wire secondary selective systems where the neutral circuit is not switched if selectivity is to be achieved between main and bus tie circuit breakers (see IEEE Std 142-1991 [B56]). The principles involved in selecting coordinated ground-relay settings are the same as those described for phase-protective devices. Figure 5-38 shows selective ground relaying for buses 1, 2, and 3 spot-network systems using a definite time ground relay operating from a window-type current transformer around the feeder cables to motor control centers, and solid-state ground trip devices in the service bus tie and main circuit breakers.

In a solidly grounded system, the zero-sequence current transformer must be of such a ratio that it will provide an output current low enough to be within relay ratings and sufficiently undistorted to accomplish accurate relaying during maximum ground-fault conditions. This is of special concern when induction disk relays are used. For the system illustrated, a ratio of 1000/5 has been selected. However, ratios as low as 100/5 have been successfully used.

5.9 Acceptance testing (commissioning), maintenance, and field testing

In order to secure the full benefit that a well-designed protective installation is capable of providing, the installation should be properly installed and tested. The tests are exacting and often complex, and should be performed very carefully to avoid endangering persons and equipment. Where possible, these services should be procured from specialists.

Prior to either testing or maintaining any component or installation, a copy of the manufacturer's instruction book should be obtained and thoroughly reviewed. These books often contain specific acceptance, maintenance, and testing procedures.

Copyright The Institute of Electrical and Electronics Engineers, Inc.
Provided by IHS under license with IEEE
No reproduction or networking permitted without license from IHS
Not for Resale

5.9.1 Acceptance testing (commissioning)

The following items, as a minimum, should be included in an acceptance testing specification:

a) *General scope*. Items should include a general statement concerning type of testing organization required, what they shall provide, and the intent of the tests.
b) *Applicable codes, standards, and references*. A listing of codes, standards, and references applicable to the project should be included.
c) *Required qualifications of testing organization*.
d) *Division of responsibility*. This section should contain statements of the responsibility of the owner, engineer, contractor, and testing organization.
e) *General requirements*. General topics, such as test equipment traceability, test reports, safety precautions, and temporary power and light, should be covered.
f) *Specific work scope*. This section should contain an itemized description of equipment to be inspected and tested.
g) *Inspection and test procedures*. A detailed description by system component specifications (e.g., switchgear and switchboard assemblies, transformers, relays, cables, etc.) of the specific inspection and test procedures to be followed should be provided. This represents the major effort of an acceptance testing program and consists of visual and mechanical inspections, as well as electrical tests. Many specific electrical tests are applicable to all components of an electrical power distribution system, while others may apply more directly to a specific piece of equipment.
h) *System function tests*. This section should specify the system function tests that should be performed to assure total system operation upon completion of equipment tests. It is the intent of system functional tests to prove the proper interaction of all sensing, processing, and action devices to effect the design end result.

The former include insulation resistance tests, insulation power factor tests, and overpotential tests. Some tests in the latter category are relay and breaker calibration tests, high-current tests, contact-resistance tests, dielectric fluid tests, and circuit breaker contact time-travel tests. Also, these general types of tests may be applied differently, depending upon the specific component under test and the voltage class of the equipment. NETA ATS-1990 [B75], provides a list of testing procedures.

5.9.1.1 General survey and diagramming

In preparation for the acceptance testing, it is necessary for the owner's engineer or the acceptance testing organization to do the following:

a) Study the intended function of each device and the manner in which all the devices are designed to operate.
b) Check the wiring diagrams to ensure that each device is connected so that it will perform its intended function. If no diagrams have been provided, make them or obtain them, for it will be difficult to do a safe and intelligent job of testing without them. Preserve the diagrams for future reference and update them when changes or additions are made.

Copyright The Institute of Electrical and Electronics Engineers, Inc.
Provided by IHS under license with IEEE
No reproduction or networking permitted without license from IHS Not for Resale

c) Compare the diagrams with the actual connections and, when differences are found, determine whether the error is in the diagrams or in the wiring and correct it.

5.9.1.2 Visual check of equipment

a) Inspect equipment for damage or misadjustment caused by shipment or installation.
b) Verify that all protective relays, auxiliary relays, trip coils, trip circuit seal-in and target coils, fuses, and instrument transformers are the proper types and range, as specified in the project documents.
c) Remove wedges, ties, and blocks installed by the manufacturer to prevent damage during shipment.

5.9.1.3 Equipment electrical tests

The following outlines an electrical acceptance testing program. Expertise is required on the part of the testing organization to properly and safely perform these tests, to interpret and analyze test results, and to submit a complete test report. (An inspection checklist for recording test values for a typical unit substation is shown in figure 5-40.) This report should reveal the condition of the system equipment upon arrival at the site and provide data for comparison with test results made over the life of the equipment. Recommended procedures for testing and maintenance are provided in many standards publications of ICEA, NEMA, and IEEE.

a) *Switchgear and switchboard assemblies*. Insulation resistance tests at specified suitable test voltage.
b) *Transformers: Liquid-filled*
    1) Insulation resistance tests
    2) Dielectric absorption tests
    3) Turns ratio tests at all tap positions (recommended for commissioning only)
    4) Sample and test insulation fluid (dielectric breakdown strength, interfacial tension, power factor, moisture content, and neutralization number) (see IEEE Std C57.106-1991 [B50], IEEE Std C57.111-1989 [B52] and IEEE Std C57.121-1988 [B53])
    5) Insulation power factor test or ac overpotential test
    6) Insulating liquid tests
        i) 500–5000 kVA—Spectrographic analysis for dissolved gases
        ii) 5001 kVA and larger—Top combustible gas analysis where applicable
c) *Transformers: Dry-type* (see IEEE C57.94-1982 [B49])
    1) Insulation resistance tests
    2) Dielectric absorption tests
    3) Turns ratio test at all tap positions
    4) Insulation power factor test or ac overpotential test
    5) Winding resistance
d) *Cables: Medium-voltage*
    1) Direct-current high-potential step-voltage tests
    2) Shield continuity test

Copyright The Institute of Electrical and Electronics Engineers, Inc.
Provided by IHS under license with IEEE
No reproduction or networking permitted without license from IHS Not for Resale

SUBSTATION # . . .

	Yes	No
A. *High-Voltage Section*		
1. Concerning the two-position, three-pole gang-operated air interrupter switches for each feeder,		
a. Do the switches operate freely and with the proper action if "quick-make"—"quick-break"?	☐	☐
b. Do the three blades make contact at the same time?	☐	☐
c. Are the arcing contacts intact?	☐	☐
d. Are there insulating barriers between the poles?	☐	☐
2. Has the circuit phase rotation been checked for the two feeders?	☐	☐
3. What are the nameplate data for the three current-limiting fuses on the transformer primary?		
4. Does the key interlocking system work correctly?	☐	☐
5. Are the stress cones and terminations made correctly?	☐	☐
6. Are the phase buses insulated completely?	☐	☐
7. Are bus connections tight?	☐	☐
8. Have the insulators been checked for cracks, cleanliness, and tracking?	☐	☐
9. Have the system ground connections been made to the ground bus?	☐	☐
10. Have the steel plates been provided to prevent access to the high-voltage compartment?	☐	☐
11. Has a mimic bus been painted on the switchgear?	☐	☐
12. Has any discoloration of current-carrying metal parts occurred?	☐	☐
B. *Transformer Section*		
1. What are the transformer nameplate data?		
2. What are the insulation resistances of the primary and secondary windings?		
a. Primary to ground _____ megohms		
b. Secondary to ground _____ megohms		
c. Primary to secondary _____ megohms		
3. What are the resistances of the delta-connected primary windings?		
a. Phase A to phase B _____ ohms		
b. Phase A to phase C _____ ohms		
c. Phase B to phase C _____ ohms		
4. Has the transformer been checked for leaking conditions?	☐	☐
5. Have the provisions been made for four 2½% taps in the high-voltage windings (two above and two below rated primary voltage)? Tap changer is set at position _____	☐	☐
6. Have the connections at the transformer bushings for both the high side and low side been checked for tightness and good contact surfaces?	☐	☐
7. Are the connections to the transformer primary and secondary bushings made through flexible connectors?	☐	☐
8. Have the transformer bushings been checked for cracks?	☐	☐
9. Has the neutral of the transformer secondary been brought out through a bushing and has it been connected to the neutral bus?	☐	☐

Figure 5-40—Typical unit substation inspection checklist

Copyright The Institute of Electrical and Electronics Engineers, Inc.
Provided by IHS under license with IEEE
No reproduction or networking permitted without license from IHS
Not for Resale

	Yes	No
B. *Transformer Section* (Cont'd)		
10. Has the neutral bus been connected to the grounding pad at the secondary end of the transformer by means of a removable bus-bar link?	☐	☐
11. Have the transformer accessory devices been checked?	☐	☐
12. Has the phase designation been maintained in connections from the transformer secondary bushing to the low-voltage bus? (Front to back, top to bottom, and left to right shall be phase A, phase B, and phase C, respectively)	☐	☐
13. Has the gas absorber been installed completely?	☐	☐
14. Have provisions been made to install auxiliary fan cooling with all necessary control devices wired?	☐	☐
C. *Low-Voltage Section*		
1. Have buses been provided for between the transformer secondary bushings and the transformer secondary main circuit breaker?	☐	☐
2. Are the three-phase main bus bars continuous and rated for _____ amperes?	☐	☐
3. Is the neutral bus continuous and rated for _____ amperes?	☐	☐
4. Is the ground bus		
a. Continuous?	☐	☐
b. Connected to the system ground?	☐	☐
c. Solidly bolted to the steel framework?	☐	☐
5. Is the bus phase designation from front to back, top to bottom and left to right phase A, phase B, and phase C, respectively, when viewed from the front of the switchgear?	☐	☐
6. Has the circuit phase rotation been checked in the bus-tie cubicle?	☐	☐
7. Are all bus connections tight?	☐	☐
8. Has any discoloration of current-carrying metal parts occurred?	☐	☐
9. Is it possible to draw a circuit breaker in or out while it is in the closed position?	☐	☐
10. If aluminum cable is used,		
a. Have the outer strands of the conductor been scored or nicked causing oxidation at the point of connection?	☐	☐
b. Are the cable terminator lugs designed for use on aluminum cable?	☐	☐
11. Have primary current-limiting fuses been provided for potential transformers?	☐	☐
12. Do the ammeter and voltmeter read correctly?	☐	☐
13. Are the ammeter and voltmeter test blocks associated with the main secondary circuit breaker wired correctly?	☐	☐
14. Are there transit barriers or protective boots over primary studs for each space cubicle?	☐	☐
15. Are the cable connections made directly to the buses only for metering and/or control?	☐	☐
16. Are all feeder conduits grounded within the substation?	☐	☐
17. Are feeder cables adequately supported?	☐	☐
18. Have feeder nameplates been installed on the switchgear?	☐	☐
19. In the fire pump feeder circuit,		
a. Is the circuit breaker overcurrent protective device set so as not to open the circuit under stalled rotor current or other motor starting conditions of the fire pump motor under maximum plant load?	☐	☐
b. Does the circuit breaker overcurrent protective device (fuses are not recommended) have overcurrent setting for short-circuit protection only (instantaneous trip without long- and short-time delay)?	☐	☐

Figure 5-40 (continued)

Copyright The Institute of Electrical and Electronics Engineers, Inc.
Provided by IHS under license with IEEE
No reproduction or networking permitted without license from IHS
Not for Resale

e) *Cables: Low-voltage*
   1) Insulation-resistance tests
   2) Continuity test
f) *Metal-enclosed busway* (See NEMA BU1.1-1991 [B69])
   1) Insulation-resistance test
   2) Overpotential test, ac or dc
   3) Phase-rotation and phase-cross voltage test
g) *Air switches: High- and medium-voltage* (See IEEE Std C37.35-1976 [B38] and IEEE Std C37.48-1987 [B41])
   1) Insulation-resistance test
   2) Overpotential test, ac or dc
   3) Contact-resistance test
h) *Air circuit breakers: Medium-voltage*
   1) Contact-resistance test
   2) Minimum pickup voltage test on trip and close coils
   3) Trip test from each protective device
   4) Insulation-resistance tests, pole-to-pole and pole-to-ground
   5) Insulation-resistance test on control wiring
   6) Insulation power factor test on the bushings
   7) Separate high-potential tests on magnetic breaker and on stationary gear
i) *Oil circuit breakers: Medium-voltage*
   1) Contact-resistance tests
   2) Contact time travel test, where appropriate
   3) Insulating fluid tests: see item b4 in this subclause
   4) Minimum pickup voltage tests on trip and close coils
   5) Trip test from each protective device
   6) Insulation-resistance test
   7) Overpotential test, pole-to-pole and each pole-to-ground, ac or dc
   8) Insulation-resistance test on appropriate control wiring
   9) Insulation power factor test on poles and appropriate bushings, including determination of tank loss index
j) *Power circuit breakers: Low voltage (see figure 5-41)*
   1) Contact-resistance test
   2) Insulation-resistance test
   3) Minimum pick current by primary current injection
   4) Long time delay by primary current injection at 300% pickup current
   5) Short-time pickup and time delay by primary injection current
   6) Instantaneous pickup by primary current
   7) Trip unit reset characteristics verification
   8) Set to engineer's prescribed settings
   9) Auxiliary protective device (such as ground-fault, undervoltage) operation verification
k) *Molded-case circuit breakers* (see NEMA AB 4-1991 [B68])
   1) Contact resistance tests
   2) Time–current characteristics test
   3) Instantaneous pickup current test
   4) Insulation resistance tests, pole-to-pole, across pole, and pole-to-ground

Copyright The Institute of Electrical and Electronics Engineers, Inc.
Provided by IHS under license with IEEE
No reproduction or networking permitted without license from IHS Not for Resale

PLANT ENGINEERING SURVEY
LOW-VOLTAGE POWER CIRCUIT BREAKER INSPECTION AND TEST RESULTS

Plant Location _____ Date _____
Circuit Breaker Location _____
Circuit Description _____
Circuit Breaker Manufacturer _____ Type _____
Manufacturer's Serial Number or Shop Order Number _____
Trip Device Manufacturer _____ Type _____
Sensor Rating _____ Long-Time Delay Range _____
Short-Time Delay Range _____ I^2t _____
Instantaneous Range _____
Cable Size _____ Ground Fault Range _____ I^2t _____
Fuse Manufacturer and Catalog Number _____

TEST RESULTS

Trip Unit		As Found Settings per Phase			As Left Settings per Phase		
		A	B	C	A	B	C
Long-Time Delay (amperes)							
Short-Time Delay (amperes)							
Instantaneous (amperes)							
Test Results	Long-Time Delay Pickup (amperes)						
	Time (seconds)						
	Short-Time Delay Pickup (amperes)						
	Time (seconds)						
	I^2t In/Out						
	Instantaneous Pickup (amperes)						
	Ground Fault Pickup (amperes)						
	Time (seconds)						
	I^2t In/Out						

Comments:

Figure 5-41—Typical low-voltage power circuit breaker inspection and test form

Copyright The Institute of Electrical and Electronics Engineers, Inc.
Provided by IHS under license with IEEE
No reproduction or networking permitted without license from IHS
Not for Resale

l) *Protective relays (see figure 5-42)*
   1) Insulation-resistance test on each circuit branch to frame (except electronic solid-state)
   2) Test for pickup parameters on each element. Make timing test at 2 points minimum (3 points preferred) on time dial curve. Check for correct pickup current of instantaneous element and target/seal-in units. Make other tests as required to check operation of restraint, directional, and other elements.
   3) Perform phase-angle and magnitude contribution tests on differential and directional relays after energization to vectorially prove proper polarity and connections.

m) *Instrument transformers*
   1) Test transformer polarity electrically
   2) Verify connection at secondary CT leads by driving a low current through the leads and checking for this amount at applicable devices
   3) Verify minimum grounding requirements as specified in NEC [B10], Article 250
   4) Confirm transformer ratio
   5) Insulation-resistance test of transformer secondary and leads
   6) Overpotential test primary insulation
   7) Verify connection of secondary VT leads by applying a low voltage to the leads and checking for this voltage at applicable devices
   8) Check for VT secondary load with appropriate secondary voltage and current measurements

n) *Metering and instrumentation*
   1) Calibrate all meters at mid-scale
   2) Determine relay pickup current by primary current injection
   3) Verify all instrument multipliers

o) *Ground-fault protection systems* (see NEMA PB 2.2-1988 [B74])
   1) Measure system neutral insulation resistance
   2) Determine relay pickup current by primary injection
   3) Test relay timing at 150% and 300% of pickup current
   4) System operation test at 55% rated voltage

p) *Grounding systems* (see IEEE Std 142-1991 [B56])
   1) Perform fall-of-potential test on main grounding electrode or system
   2) Perform two-point method test or ground continuity test

q) *Motor control centers* (see NEMA ICS 2.3-1983 [B72])
   1) Insulation-resistance test of each bus section, phase-to-phase and phase-to-ground
   2) Insulation-resistance test of each starter/controller section, with starter contacts closed and protective device open
   3) Continuity check of each control circuit
   4) Test motor overload relays by primary current injection
   5) Perform operational tests by initiating control devices

r) *Rotating machinery* (see NEMA MG 1-1993 [B73])
   1) Large motors
      i) Dielectric absorption test on motor and starter/controller circuit
      ii) Determine motor winding polarization index
   2) Small motors
      i) Dielectric absorption test on motor winding

--`,,`,,`-`-`,,`,,`,`,,`---

Copyright The Institute of Electrical and Electronics Engineers, Inc.
Provided by IHS under license with IEEE
No reproduction or networking permitted without license from IHS Not for Resale

PLANT ENGINEERING SURVEY
OVERCURRENT RELAY INSPECTION AND TEST RESULTS

Plant Location _____ **Date** _____
Relay Location _____
Relay Description _____
Relay Type _____
Relay Manufacturer and Model No. _____
Current-Transformer Ratio ___ **Accuracy** ___ Voltage-Transformer Ratio ___ **Accuracy** ___
Burden: _____ **Burden:** _____

TEST RESULTS

Settings			Relay Tests					
Tap (amperes)	Time Dial	Instantaneous	Pickup (amperes)	Calibration Current (amperes)	Time (seconds)	Instantaneous Pickup (amperes)	Target (dc amperes)	
								Specified
				4X:				As Found
				10X:				
				4X:				As Left
				10X:				
			For Future Tests					Date

Seal-in holds at (dc amperes) _____
Comments:

Figure 5-42—Typical relay inspection and test form

Copyright The Institute of Electrical and Electronics Engineers, Inc.
Provided by IHS under license with IEEE
No reproduction or networking permitted without license from IHS
Not for Resale

ii) The 30/60 s ratio shall be determined
3) Insulation-resistance test on pedestal, when applicable
4) Rotation test
5) Full-load and no-load current test
6) Observe proper operation and sequence of starters/controllers
7) Large motors: Perform vibration baseline test
8) Small motors: Perform vibration amplitude test
9) Check all protective devices
10) Overpotential test, winding to ground

s) *Automatic transfer switches* (see ANSI/NFPA 110-1993 [B13] and IEEE Std 446-1987 [B58])
1) Perform insulation-resistance tests
2) Set and calibrate voltage and frequency sensing, transfer time, and shutdown relays
3) Perform automatic transfer by simulation loss of normal power and return to normal power
4) Monitor and verify correct operation and timing of
i) Normal voltage and frequency sensing relays
ii) Engine start sequence
iii) Time delay upon transfer
iv) Alternate voltage and frequency sensing relays
v) Automatic transfer operation
vi) Interlocks
vii) Timing delay and retransfer upon normal power restoration
viii) Engine shutdown features

t) *Battery and capacitor-stored control energy systems*
1) Measure battery system charging voltage and individual cell voltages
2) Measure battery electrolyte specific gravity and level
3) Conduct battery discharge capacity tests
4) Test all capacitor trip devices according to manufacturers' instructions

u) *Surge arresters*
1) Perform 60 Hz sparkover test
2) Perform radio influences voltage test
3) Perform insulation power factor test
4) Perform grounding continuity test to ground grid system

v) *Outdoor bus structures*
1) Insulation-resistance test
2) Overpotential test
3) Micro-ohmmeter test bus section joints

w) *Turbine/engine generators* (see ANSI/NFPA 110-1993 [B13] and IEEE Std 446-1987 [B58])
1) Dielectric absorption test on winding and determine polarization index
2) Phase rotation test
3) Protective relay tests (see protective relays)
4) Function test engine shutdown features, such as low oil pressure, coolant over-temperature, over-speed, and over-cranking
5) Vibration baseline test

Copyright The Institute of Electrical and Electronics Engineers, Inc.
Provided by IHS under license with IEEE
No reproduction or networking permitted without license from IHS Not for Resale

6) Resistance load bank test
7) Perform load bank test

x) *Systems function tests*. Upon completion of equipment tests, systems function tests shall be performed. Their intent is to prove the proper interaction of all sensing, processing, and action devices that affect the design end results.

5.9.1.4 Specific equipment testing

a) *Direct-trip circuit breakers*. Low-voltage air circuit breakers often are tripped directly by the current flowing through them without the interposition of current transformers and relays. Electromechanical trip devices usually are set at the factory; to check them in the field requires a test source capable of supplying trip currents. If they cannot be tested, there must at least be verification that the marked instantaneous and time-delay settings are as required for coordination with other circuit breakers and fuses.

Static electronic trip devices have adjustments that are easily set and tested at the job site using a small compact test set designed for that purpose by the breaker manufacturer. The adjustments usually are factory set on their minimum settings; it is advisable, therefore, to set and calibrate the devices to their specified values. Record settings (see typical form; figure 5-41).

b) *Relay-operated circuit breakers*. The relays should be checked in accordance with the manufacturer's instructions and with the general guide below, in which initial and maintenance checks are compared. However, the actual performance of the relays in service depends on the behavior of the instrument transformers that supply them with current and potential. These, in turn, are influenced by the magnitude of their secondary burdens. Therefore, it is advisable to plan the testing in such a way as to obtain information about the performance of the relays, wiring, and transformer together as a unit as well as separately. Record the settings (see typical form; figure 5-42).

Figure 5-43 shows one phase of a typical current-transformer circuit, indicating four different positions at which test current may be applied. The first three positions cause current to flow either toward the relay only, toward the current transformer only, or toward both in parallel. The test from Position 2 or 3 toward the current transformer only is a secondary impedance or excitation test, and should include at least three points on the current-transformer saturation curve with one at or slightly above the knee. One three-phase set of current transformers may differ widely in impedance from another set, yet each may be satisfactory for its own function if the values are consistent within the set.

1) *Position 1*. Test current applied at the individual relay location. At this point it is possible to make three measurements, each of which is useful under certain conditions. In order to show Position 1 in all three of its variations, an auxiliary current transformer has been added. These auxiliary current transformers are often used in multiple differentials and other complex schemes, but are rarely employed in simple circuits like that shown in figure 5-40. In testing, they are treated the same as any other current transformers.

Copyright The Institute of Electrical and Electronics Engineers, Inc.
Provided by IHS under license with IEEE
No reproduction or networking permitted without license from IHS Not for Resale

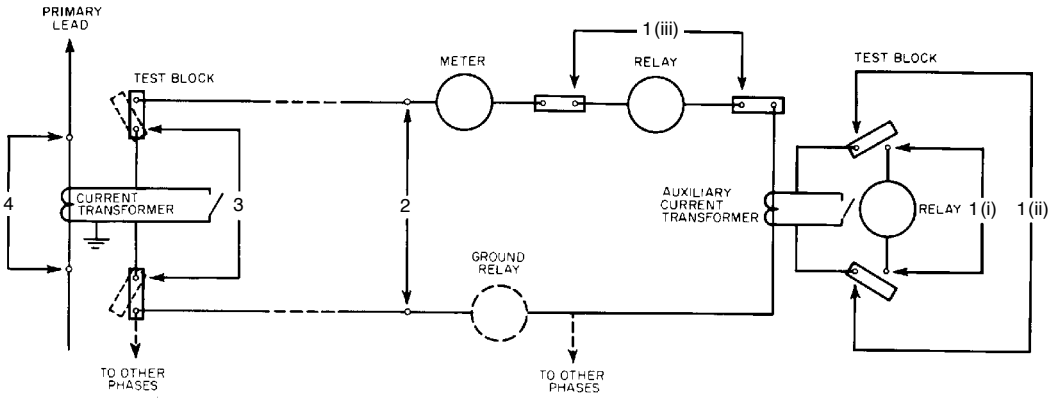

Figure 5-43—Typical current-transformer circuit

i) The relay is disconnected, checked, and calibrated separately as an instrument. Relays should be checked with a current standard and an accurate timing device when they are placed in service, to make sure they have not been damaged in shipment and that they operate in the desired time shown by the coordination curves. If a relay does not give the desired operating time for a given current on the predetermined time dial setting, the desired time usually can be obtained by a minor adjustment of the time dial. Other adjustments should not be attempted unless the adjuster is quite familiar with relay design and performance or has specific manufacturer's instructions.

ii) With the relay disconnected and the main current-transformer primary effectively open, the test current is applied to the remainder of the secondary circuit. The current drawn should be low until the voltage is raised to the point where a main or auxiliary current transformer begins to saturate. This test checks for defects in the secondary circuit, including current-transformer excitation current, open circuits, short circuits, cross connections to other phases, etc.

If this test discloses appreciable differences in the test voltage required to produce a given value of current in the various phases, the cause of these differences needs to be discovered. The cause may be an open or short circuit in the secondary wiring, a defective current transformer, or a legitimate unbalance of secondary burden caused, for example, by single-phase metering or by the omission of a relay on one phase. It is not unusual to find that the burden in the current transformer residual connection, including ground relays, is much greater than in the phase leads. If the burden appears excessive, tests should be conducted at Position 2.

iii) The test current is applied to the relay current terminals, with the secondary wiring to the current transformers and other equipment normally connected. The relay is subjected to the same tests as in Position 1(i), including

Copyright The Institute of Electrical and Electronics Engineers, Inc.
Provided by IHS under license with IEEE
No reproduction or networking permitted without license from IHS
Not for Resale

timing. Any difference in the results obtained is due to the fraction of current used in the excitation of current transformers.

This test is of particular value, not only because it provides a measure of the extent to which current-transformer performance affects relay pickup and timing, but also because it is the basis of much maintenance testing. If the values obtained in this position during later maintenance tests are substantially the same as those in the installation tests, the entire layout may be assumed unchanged. Only if the tests in Positions 1(ii) and 1(iii) show unexplained unbalances, definitely noticeable saturation, or questionable residual burdens, are more extended tests necessary.

2) *Position 2*. Test current applied at switchboard terminals of current transformer leads. The test current is applied to an entire phase group of relays, meters, auxiliary current transformers, etc. Since the main current transformers remain in shunt with the burden, their effect on relay performance is included. This is a convenient and fairly effective means of determining whether special relay calibrations are required.

   In testing ground relays from Position 2, both phase- and ground-relay burdens will be included, which is the condition that will exist in actual operation to clear a ground-fault. The phase relays sometimes will be called upon to operate on phase-to-phase faults (test current applied between two current-transformer phase leads) and sometimes on three-phase faults (test current applied between one current-transformer phase lead at a time and the neutral current level, with the neutral burden jumpered out). If there is any significant difference in readings, data should be recorded for both connections. The connections at Position 2 may be opened to test the current transformers without burden other than their leads to the panel. This is particularly advantageous in metal-clad installations, where Positions 3 and 4 are inaccessible or difficult to reach.

3) *Position 3*. Test current applied at current-transformer secondary terminals. The test current is applied across the secondary terminals of the current transformer or across the secondary leads in the proximity of the current transformer, with all meters, relays, and other burden normally connected and the primary open. The testing is the same as Position 2, and the results are the same except that the secondary leads are included with the burden in the same manner as in normal service and that all devices can be readily identified with their respective current transformers. If leads were not positively identified, this is important. The current transformer can be tested alone from this position.

4) *Position 4*. Primary current check. This is the best method of checking the performance of current transformers and relays together, since all burdens are included along with their normal effect on the saturation characteristics of the current transformer. Unfortunately, it is usually difficult to make the necessary high-current connections to the primary circuit and the equipment required for the high-current test source is unwieldy, so the primary current check is limited to special applications. When a primary current check is made, both ratio and polarity of the current transformers should be determined.

--`,,`,,`-`-`,,`,,`,`,,`---

Copyright The Institute of Electrical and Electronics Engineers, Inc.
Provided by IHS under license with IEEE
No reproduction or networking permitted without license from IHS
Not for Resale

5.9.1.5 Implementation of safeguards to prevent permanent magnetization of current transformers

If during any of the above procedures the test current in the secondary winding of a current transformer is abruptly interrupted, the current transformer core iron may become permanently magnetized by residual flux to an extent determined by the current-transformer turns ratio, the hysteresis characteristics of the core steel, and the magnitude of test current interrupted in the current-transformer winding. Unremoved, this residual magnetism will significantly affect the accuracy of the current transformers when they are placed back into service, and may cause the connected relays to nuisance trip or otherwise operate unpredictably. This misbehavior can be avoided by using a continuously variable current supply for any tests involving current transformers in the connected circuits and instructing the operator to gradually reduce the test current from the test value to zero before opening the circuit to the test power source. As an alternative, the tests can be performed with all current-transformer secondaries short-circuited and the test procedures modified accordingly.

5.9.1.6 Final checking of equipment going into service

Once the usual high-potential and phasing checks have been completed, the equipment is energized at normal potential for final check. Instrument transformer cases should have been grounded with conductors of adequate size, and the secondary wiring grounded either solidly or, if necessary, through well-designed spark gaps. With proper grounds in place, suitable test switches, jacks, links, etc., installed, and with adequately insulated test leads, many users change connections and make tests with the equipment energized. However, one has to make certain that all the necessary auxiliary testing devices are present and that every step of the testing procedure has been planned and closely examined in advance to guard against unforeseen hazards.

a) *Current transformer secondary-circuit checks*. All chances of connection, insertion, and removal of meters, etc., should be made in such a manner that the secondary circuits of energized current transformers are not opened, even momentarily. An energized current transformer with an open secondary acts as a step-up transformer with a ratio equal to the turns ratio, and thus dangerously high voltages are generated. All current-transformer secondary circuits should therefore be provided with a test block that requires the current transformer secondary terminals to be short-circuited before the secondary circuit can be disconnected.

   1) *Null checks*. If current is found where there should be none, a defect is indicated. However, a null check is inconclusive and should be supplemented by an additional check that would detect a false null caused by an open or short circuit.

      For differential circuits in which the operating coil normally has no current, check that there is none. This, in conjunction with items 2 or 3 in this subclause, verifies that the current transformer ratios are correctly balanced and the polarities and phases correctly related.

Copyright The Institute of Electrical and Electronics Engineers, Inc.
Provided by IHS under license with IEEE
No reproduction or networking permitted without license from IHS Not for Resale

A zero or negligible current reading in the neutral or common return lead of a three-phase set of current transformers under balanced-load conditions indicates ratio balance and like polarity of the three secondaries.

2) *Inspection of active relay circuits*. Use an ammeter, voltmeter, wattmeter, or phase-angle meter to check for the proper values and polarities of voltage and current in the various relay circuits. Check the contact positions of directional element and voltage relays and compare with those expected in view of load conditions.

3) *Relay operation checks with diverted load currents*. Whenever any relay in service is tested in a manner that may cause it to operate, the consequences of circuit breaker tripping must be considered. If a circuit breaker operation is not permissible, the trip circuit of the relay being checked must be opened.

   i) *Differential relays*. After determining that current is in the individual current transformer circuits but none in the operating coil circuit, a current may be caused to flow in the operating coil by temporarily short-circuiting and disconnecting all but one of the current transformers.

      The current from the remaining current transformer will check not only the operating coil circuit but also the current transformer and its leads. This should be done with each current transformer circuit in turn if they have not been verified by other tests.

   ii) *Neutral or residual current relays*. Short-circuit and disconnect the current transformer leads of all but one phase. The remaining phase will supply current to the relay.

b) *Voltage (potential) transformer secondary circuit checks*. Measure the voltages applied to all relay potential coils. If any are inadequate, investigate. Look for blown fuses, short circuits, excessive burdens, and improperly adjusted potential devices.

   Check the voltage (potential) transformer and phase to which each relay potential terminal is connected by removing one potential fuse at a time (at the voltage transformer secondary terminals) and noting the effect on the voltage applied to the relay.

   1) *Ground-fault voltage relays and elements*. Voltage relays, or relay elements, that are connected in one corner of a voltage transformer secondary broken-delta connection have no voltage across them in the absence of a ground fault. Such a fault can be simulated as follows:
      i) By de-energizing the equipment so that it is safe to work on;
      ii) By disconnecting the phase lead from one voltage transformer primary terminal and fastening this lead where it can safely be re-energized;
      iii) By short-circuiting the vacated primary terminal to its neutral terminal;
      iv) By re-energizing the equipment, reading voltages, and observing relay operation;
      v) By returning connection to normal and re-energizing the equipment.

   2) *Ground-fault directional relays*. These have polarizing windings, either a current winding energized from a current transformer in the equipment neutral-to-

Copyright The Institute of Electrical and Electronics Engineers, Inc.
Provided by IHS under license with IEEE
No reproduction or networking permitted without license from IHS Not for Resale

ground connection or potential windings energized from one corner of a broken-delta-connected set of voltage transformers, the same as the preceding type, and their operating current windings energized from the common (neutral or residual) connection of a set of current transformers. These relays should be checked with diverted load currents as follows:

i) By determining the direction of power flow;

ii) By altering one phase of the voltage transformer primary as described in items 1ii and 1iii;

iii) By short-circuiting and disconnecting the current transformer leads of this same phase. This should cause the ground-fault directional relay to indicate a direction of power flow that is the reverse of that actually existing in the line; that is, if the power flows toward the bus, the relay contacts should close to trip;

iv) By restoring the current-transformer leads and removing their short circuit. Then short-circuiting and removing the current-transformer leads of the other phases. This should cause the relay to indicate a direction of power flow that is the same as that actually in the line;

v) By restoring all connections to normal.

c) *Stage system test at normal or reduced system voltage*. This method causes no difficulties with automatic throw-over devices and is the best method of testing them. Nearly all other system tests require setting up staged faults, which are the last resort in testing. The faults are applied to the system at carefully chosen times and places, under controlled and back-up protected conditions, and the action of relays and other equipment is recorded and analyzed. Such tests are seldom used and can only be justified under the following conditions:

1) The scheme is intricate, new, or unfamiliar;

2) The wiring is complicated or inaccessible;

3) The relay response characteristics are believed to be so critical that the use of normal or diverted load currents would introduce intolerable phase-angle errors;

4) The scheme has shown otherwise unexplainable misbehavior;

5) The power system is so complex that performance of protective devices cannot be accurately predicted.

A staged fault test should be approved only when no other method of testing will suffice. The plan should be scrutinized from every conceivable safety consideration, and all parties who could possibly be affected should be notified.

5.9.2 Maintenance [B64]

For dependable performance of protective devices, regular and systematic inspection and maintenance are essential. The three basic reasons for systematic maintenance are safety, reliability, and economy: safety of personnel and of plant and equipment, reliability of service, and economy in the reduction of major repairs and in the reduction of power loss.

Copyright The Institute of Electrical and Electronics Engineers, Inc.
Provided by IHS under license with IEEE
No reproduction or networking permitted without license from IHS Not for Resale

Regarding safety, a survey by Factory Mutual Research indicates that approximately one of every five industrial fires is of electrical origin and that about one-half of these are due to lack of adequate maintenance.

Regarding economy, systematic preventive maintenance will result in protective devices that stand ready to prevent costly destruction and loss of electrical equipment during abnormal conditions, with the resulting downtime and loss of production until repairs and replacement are completed.

5.9.2.1 General maintenance

(See also ANSI/NFPA 70B-1990 [B11].) A regularly scheduled preventive maintenance program is the most important factor in keeping protective devices in dependable operating condition. Periodic inspection and suitable records will indicate what maintenance is advisable and whether or not it should be performed immediately or may be safely deferred until the next inspection period.

The intervals between inspections should be determined by the mechanical design of the protective devices and by local operating and atmospheric conditions. Where dust is rapidly deposited within equipment or where condensation may occur, the inspection and cleaning operations should be frequent. Condensation can be very serious and, when detected, steps should be taken to remove the cause, or heaters should be installed to keep the equipment dry. Combination switching and protective devices have a limited safe life cycle which is closely related to the number of times they operate. This fact is important in the consideration of the inspection and maintenance program. The required frequency of inspection, maintenance, and tests varies for different industries and local conditions.

Inspections should be made by competent and experienced personnel who are familiar with the manufacturer's instructions for each device. They should be equipped with necessary instruments, gauges, tools, and other test equipment, and should be skilled in their use. Inspection and test records are necessary documents. They are useful guides in determining the frequency of required maintenance.

5.9.2.2 General precautions

(See also ANSI/NFPA 70E-1988 [B12].) *Do not work on or around live parts*. If emergencies require that work be done on live parts, it should be done only by personnel experienced in working equipment "hot." Rubber gloves with leather protector, safety glasses, and other protective equipment must be used.

Extreme care must be exercised at all times. All circuits should be considered alive until personnel expecting to work on them assure themselves personally that they are de-energized. Every possible precaution should be taken to assure that the circuit will not be energized while maintenance personnel are working on it. It is recommended that switching devices isolating the circuit be padlocked in the open position and personnel working on the circuit retain the key until the circuit is cleared. On high-voltage circuits that are de-energized, proper grounding methods should be used within view of the maintenance personnel.

Copyright The Institute of Electrical and Electronics Engineers, Inc.
Provided by IHS under license with IEEE
No reproduction or networking permitted without license from IHS Not for Resale

5.9.2.3 Replacement and spare parts

An adequate supply of repair parts should be kept in stock for all units. These usually are listed in the manufacturer's instructions. Replacement fuses of the correct type and rating should be available when needed. Fuses of a larger size, having less current-limiting ability, or having an interrupting rating less than required for the application, should never be substituted for a fuse of the correct size and type. Always de-energize the circuit before replacing a fuse.

5.9.2.4 Fuses

It is recommended that a visual inspection of fuses be made annually, unless experience indicates that more frequent checks are necessary. The following steps are recommended:

a) First de-energize the equipment.
b) Check all fuses to assure that the correct rating and type are installed. Where renewable fuses are used, the fuse links should be examined to assure that the correct link is installed; however, the use of renewable fuses is not recommended. It is recommended that renewable fuses be replaced with fuses having correct current rating, adequate interrupting rating, and proper time-delay characteristics.
c) Look for evidence of overheating of cartridge fuses. Replace fuses having discolored or weakened casings and determine and correct the cause of the overheating. Where fuse clips have lost their tension, they should be replaced with new clips, and suitable clamps should be installed to provide good contact. Where the ferrules or knife blades of cartridge fuses are corroded or oxidized, the contact surfaces should be cleaned and polished. Silver-plated contact surfaces should not be abraded. Wiping surfaces with a noncorrosive cleaning agent is suggested.
d) Look for fuses that have been bridged with wire, metal strips, disks, etc. Replace with correct fuses and take the necessary action to prevent a recurrence.
e) Check terminals to assure that all connections are tight. Where there is discoloration or other evidence of heating, the connecting surfaces should be cleaned and polished. Silver-plated surfaces should not be abraded. Aluminum parts that show deterioration should be replaced.
f) Check enclosure to assure that the equipment is protected and that easily ignitable materials are excluded. Check that covers are in place and fastened. In hazardous locations, assure that fuses are installed in an appropriate explosion-proof enclosure with the required gaskets and seals intact.

5.9.2.5 Enclosed switches

It is recommended that a visual inspection of enclosed switches be made annually, unless experience indicates that more frequent checks are necessary. The following steps are recommended as may be required.

a) De-energize the equipment.
b) Thoroughly clean all parts, inside and outside. Lubricate operating mechanism and sliding contact surfaces if required.

Copyright The Institute of Electrical and Electronics Engineers, Inc.
Provided by IHS under license with IEEE
No reproduction or networking permitted without license from IHS Not for Resale

c) Check contacts for alignment and adjustment. Clean and dress blades if required. Many contact surfaces, such as arcing contacts, are silver tungsten or other types of materials that must *never* be dressed. When contacts of these materials require maintenance, they must be replaced. If contact clips have lost their tension, replace clips or replace the switch.

d) Check that connections of blades to insulating bar are tight. Check that rod for external operation is attached to insulating bar. Check that spring for snap action is operating correctly. Where parts are damaged, they should be replaced or a new switch installed. Check the door interlock for proper operation.

e) Check terminals to assure that all connections are tight. Where there is discoloration or other evidence of heating, the connecting surfaces should be cleaned and polished. Before returning to service, determine the cause of heating and correct as required. Silver-plated surfaces should not be abraded. Aluminum parts that show deterioration should be replaced.

f) Check enclosures to assure that they are clean, that switch is protected, and that easily ignitable materials are excluded. Check that covers are in place and fastened. In hazardous locations, ensure that switches are installed in appropriate explosion-proof enclosures and the conduit from the switch enclosure is properly sealed.

5.9.2.6 Molded-case circuit breakers

It is recommended that a visual inspection be made annually, unless experience indicates that more frequent checks are necessary. Most molded-case circuit breakers are factory calibrated and the covers sealed. This seal should not be broken as it may void the warranty. It is recommended that molded-case circuit breakers be tested before being placed in service by passing sufficient current through them to cause them to trip. If a molded-case circuit breaker is found to be defective, it is recommended that it be replaced and not repaired.

For the annual visual inspection, the following steps are recommended:

a) De-energize the equipment.

b) Look for external evidence of damage or overheating. If found, replace unit involved and correct source of trouble.

c) Check terminals to assure that all connections are tight. Where there is discoloration or other evidence of heating, the connecting surfaces should be cleaned and polished. Silver-plated surfaces should not be abraded. Aluminum parts that show deterioration should be replaced.

d) Open and close the circuit breaker several times in order to exercise the mechanism and the contacts.

e) Where installed in enclosures, assure that enclosures are clean and provide the required protection. Check that covers are in place and fastened and test any door safety interlocks for correct operation. In hazardous locations, ensure that circuit breakers are installed in appropriate explosion-proof enclosures and the conduit from the circuit-breaker enclosure is properly sealed.

Copyright The Institute of Electrical and Electronics Engineers, Inc.
Provided by IHS under license with IEEE
No reproduction or networking permitted without license from IHS Not for Resale

If a comprehensive thorough maintenance inspection is justified by severe duty or environment, or if a higher degree of reliability is required, the following procedures are recommended:

a) With line and load terminals completely disconnected, check the insulation resistance between phases of opposite polarity and phase to ground with a megohmmeter. The voltage used for this test should be at least 50% greater than the circuit-breaker rating; however, a minimum of 500 V is permissible. Also, check the resistance between the line and load terminals with the circuit breaker open. If the resistance values are below 1 MΩ, the circuit breaker should be removed and returned to the manufacturer for repair or replacement.
b) With line and load terminals completely disconnected, make a dc millivolt drop test from line to load terminals of each circuit breaker. It is recommended that this test be made at a nominal dc voltage and a practical value (50–100%) of rated current. The manufacturer can furnish the acceptable ranges for millivolt drop tests.
c) With an ammeter in the circuit, apply a current of approximately 300% of the circuit-breaker rating to each pole to assure that the circuit breaker will trip automatically. Should the circuit breaker fail to trip, it should be returned to the manufacturer for repair or replacement.
d) With an ammeter in the circuit, apply a current of approximately 200% of the instantaneous magnetic trip pickup value to assure that the magnetic trip device is operating.
e) Mechanical operation should be checked by moving the operating handle to the ON and OFF positions several times. This step is most important.

5.9.2.7 Low-voltage power circuit breakers

It is recommended that a visual inspection be made annually, unless experience indicates that more frequent checks are necessary. It is recommended that a complete inspection and maintenance, if required, be made at two-year intervals.

At the annual visual inspection, the following steps are recommended:

a) De-energize the equipment.
b) Look for evidence of damage or overheating. If found, repair or replace the parts involved and correct the source of trouble.
c) Check terminals to assure that all connections are tight. Where there is discoloration or other evidence of heating, the connecting surfaces should be cleaned and polished. Before returning to service, determine the cause of heating and correct as required. Silver-plated surfaces should not be abraded. Aluminum connections that show deterioration should be replaced.
d) Open and close the circuit breaker several times to exercise the mechanism and contacts.
e) Check enclosure to assure that enclosures are clean and that the proper degree of protection is provided.

Copyright The Institute of Electrical and Electronics Engineers, Inc.
Provided by IHS under license with IEEE
No reproduction or networking permitted without license from IHS Not for Resale

At the two-year inspection, the following additional steps are recommended, using the manufacturer's instructions:

a) Remove arc chutes and examine for burning. Clean or replace when necessary.
b) Check contact alignment and pressure. Adjust to manufacturer's recommendation, if required.
c) For draw-out equipment, check the alignment and pressure of the primary and secondary disconnecting device contact fingers.
d) Check the settings of automatic tripping units and check their operation by moving the trip armatures to trip the circuit breaker.
e) For electrically operated circuit breakers, check the reliability of the control power source.
f) Check that latches and triggers are properly adjusted and that the latch bite is in accordance with manufacturer's recommendation.
g) If there are flexible shunts, see that they are in good condition and that connections are tight.
h) Check pins, bolts, nuts, and general hardware, and tighten where necessary.
i) Check auxiliary switches to see that contacts are in good condition and that operating links are properly adjusted.
j) Check mechanical interlocks that prevent withdrawing or inserting a circuit breaker while it is closed.
k) Check control wiring for loose connections.
l) Thoroughly clean all parts and lubricate in accordance with manufacturer's instructions.

At two- or three-year intervals it is recommended that the calibration of overcurrent devices be tested and adjusted. This test should be done by personnel experienced in this work who have been well trained and who have the necessary test equipment. Where adverse environmental conditions exist or where operating of the equipment is frequent, testing annually may be required. Arrangements for these tests may be made with consulting engineers, manufacturers, or testing laboratories. In large industrial plants, staffing of trained personnel and the purchase of test equipment may be justified as a part of the plant maintenance facilities.

5.9.2.8 Protective relays

It is recommended that protective relays be inspected annually, unless experience indicates that more frequent inspection is necessary. They should be serviced in accordance with the manufacturer's instructions to ensure accuracy and reliability. The following general procedures are recommended:

a) Relays should be clean and free from friction.
b) Contacts should be maintained and properly aligned.
c) All leads and terminal hardware should be tight.
d) All application requirements should be observed.
e) Relay settings should be verified for conformance with the recommendations of the protective device coordination study.

Copyright The Institute of Electrical and Electronics Engineers, Inc.
Provided by IHS under license with IEEE
No reproduction or networking permitted without license from IHS Not for Resale

f) Relays should be calibrated and tested for accuracy in accordance with the manufacturers' recommendations. Test intervals should be two years or as job experience dictates.

5.9.2.9 Motor-control equipment

It is recommended that motor-control equipment be inspected and cleaned at six-month intervals. Where motors are started many times a day, it may be necessary to inspect and clean at more frequent intervals. The required frequency varies in proportion to the rate of motor starts and upon local atmospheric conditions. It is recommended that a complete inspection be made annually. For the six-month inspection, the following steps are recommended:

a) De-energize the equipment.
b) Thoroughly clean all parts, tighten all connections, and lubricate if required.
c) Inspect contacts and arcing tips and, if rough, replace. Since contacts operate in sets, replacement should be made in sets. The extra time and expense spent in replacing the set will be repaid in contact life. Do not file contacts.
d) Examine arc chutes for burning and replace if required (medium-voltage starters).
e) Check terminals to assure that all connections are tight. Where there is discoloration or other evidence of heating, the connecting surfaces should be cleaned and polished. Before returning to service, determine the cause of heating and correct as required. Silver-plated surfaces should not be abraded. Aluminum connections that show deterioration should be replaced.
f) Motor overload relays should be checked to ensure that the correct heaters are installed. The overload relay reset should be checked to see that it is correctly set for manual or automatic reset.
g) Check enclosure to assure that the proper degree of protection is provided. Check that covers are in place and fastened, and test any door safety interlocks for correct operation. In hazardous locations, ensure that controllers are installed in explosion-proof enclosures and the conduit from the motor controller is properly sealed.

5.9.2.10 Switchgear assemblies and motor-control centers

It is recommended that switchboards, switchgear assemblies, and motor control centers be inspected and cleaned annually, unless experience indicates that more frequent inspection is required. The following steps are recommended:

a) Assure that all circuits are de-energized and locked out in accordance with lock and tag procedures.
b) Assure that the area around the assembly is kept clean and free of combustibles at all times. This should be part of the day-to-day maintenance.
c) Inspect buses and connections to be sure that all connections are tight. Look for abnormal conditions that might indicate overheating or weakened insulation. Infrared testing can identify hot-spots caused by loose connections without de-energizing the equipment.
d) Remove dust and dirt accumulations from bus supports and enclosure surfaces. Use of a vacuum cleaner with a long nozzle is recommended to assist in this cleaning

Copyright The Institute of Electrical and Electronics Engineers, Inc.
Provided by IHS under license with IEEE
No reproduction or networking permitted without license from IHS Not for Resale

operation. Wipe all bus supports clean with a cloth moistened in a non-toxic cleaning solution. (Refer to manufacturer's instructions for recommended solvent.) Do not use abrasive material for cleaning plated surfaces, since the plating will be removed.

e) The internal components should be maintained according to the specific instructions supplied for each device.

f) Secondary wiring connections should be checked to be sure they are tight.

5.9.2.11 Instrument transformers and wiring

Inspect equipment visually for obvious defects such as broken studs, loosened nuts, damaged insulation, etc.

The indication of normal potential at the relay by lamp or voltmeter is considered adequate verification for voltage transformers and circuits. If the combined relay and current transformer check made at installation is repeated and substantially the same results are obtained, this is sufficient proof that there is no short circuit in the current transformer or its leads. A check under load with a low-burden ammeter in series or shunt with the relay will establish proof of continuity. More elaborate checking may be required if there has been any change in the equipment or wiring or if a change in setting materially alters the current or potential transformer burdens. If there is evidence of improper performance, the equipment must be completely de-energized, the protective ground connections removed, and the insulation of the current, potential, and control wiring tested.

5.9.2.12 Control wiring and operation

Periodic testing of protective equipment must ensure that the operation of any tripping relay will result in the circuit breaker being tripped. After all terminals and exposed portions of the trip circuit wiring and the condition and adjustment of any circuit breaker auxiliary switches in the trip circuit have been visually checked, the relay trip contacts should be manually closed to simulate an actual trip operation. Where there are too many relays to trip the circuit breaker from each, the trip circuit can normally be tested through at least one relay that is connected with the others to a common point on the opening control circuit wire. A record should be kept of each relay from which the circuit breaker was tripped, so that all relays may, in turn, be covered during successive tests.

5.9.2.13 Completing the job

Before re-energizing the protective system, a visual inspection by at least two qualified persons should be made to ascertain that all temporary ground connections are removed and that all tools, rags, and other cleaning aids have been removed from the interior of switchgear and unit substations.

5.9.2.14 Special maintenance

Following interruption of a fault, certain equipment may require special maintenance. Refer to the equipment manufacturers' instructions for special directions.

Copyright The Institute of Electrical and Electronics Engineers, Inc.
Provided by IHS under license with IEEE
No reproduction or networking permitted without license from IHS
Not for Resale

5.9.3 Records

Keep complete records for each unit of electrical equipment. These should include manufacturers' instruction bulletins and repair part bulletins. They will be extremely helpful in emergencies to quickly identify parts and secure replacements needed to make repairs.

Properly recorded data will indicate when repairs may be anticipated. Records should show nameplate data, ratings, date of installation, etc. Reference drawings, manufacturers' instructions, and spare part data should be recorded. The dates of each inspection and a record of all tests and maintenance should be included.

5.10 Bibliography

[B1] Accredited Standards Committee C2-1993, National Electrical Safety Code.

[B2] AIEE Committee Report, "Bibliography of Industrial System Coordination and Protection Literature," *IEEE Transactions on Applications and Industry,* vol. 82, pp. 1–2, Mar. 1963.

[B3] Ananian, L. G., and Colvin, F. L., "The Industrial Electrical Engineer's Responsibilities and How They Reflect on Management," *IEEE Transactions on Industry and General Applications,* vol. IGA-7, pp. 169–177, Mar./Apr. 1971.

[B4] ANSI C37.6-1971, American National Standard Schedules of Preferred Ratings for AC High-Voltage Circuit Breakers Rated on a Total Current Basis.

[B5] ANSI C37.42-1989, American National Standard for Switchgear—Distribution Cutouts and Fuse Links.

[B6] ANSI C37.46-1981 (Reaff 1987), American National Standard Specifications for Power Fuses and Fuse Disconnecting Switches.

[B7] ANSI C37.47-1981 (Reaff 1988), American National Standard Specifications for Distribution Fuse Disconnecting Switches, Fuse Supports, and Current-Limiting Fuses.

[B8] ANSI C50.10-1990, American National Standard for Rotating Electrical Machinery—Synchronous Machines.

[B9] ANSI C50.13-1989, American National Standard for Rotating Electrical Machinery—Cylindrical Rotor Synchronous Generators.

[B10] ANSI/NFPA 70-1993, National Electrical Code.

[B11] ANSI/NFPA 70B-1990, Electrical Equipment Maintenance.

[B12] ANSI/NFPA 70E-1988, Electrical Safety Requirements for Employee Workplaces.

Copyright The Institute of Electrical and Electronics Engineers, Inc.
Provided by IHS under license with IEEE
No reproduction or networking permitted without license from IHS Not for Resale

[B13] ANSI/NFPA 110-1993, Emergency and Standby Power Systems.

[B14] ANSI/UL 198B-1987, Safety Standard for Class H Fuses.

[B15] ANSI/UL 198C-1986, Safety Standard for High-Interrupting Capacity Fuses, Current-Limiting Types.

[B16] ANSI/UL 198D-1987, Safety Standard Class K Fuses.

[B17] ANSI/UL 198E-1987, Safety Standard Class R Fuses.

[B18] [ANSI/UL 198F-1987, Safety Standard for Plug Fuses.

[B19] ANSI/UL 198G-1987, Safety Standard for Fuses for Supplementary Overcurrent Protection.

[B20] ANSI/UL 845-1987, Safety Standard for Motor Control Centers.

[B21] ANSI/UL 891-1984, Safety Standard for Dead-Front Switchboards.

[B22] Baker, D. S., "Generator Backup Overcurrent Protection," *IEEE Transactions on Industry Applications,* vol. IA-18, pp. 632–640, Nov./Dec. 1982.

[B23] Blackburn, J. L., *Protective Relaying*. New York: Marcel Dekker, Inc., 1987.

[B24] Bridger, B., Jr., "High-Resistance Grounding," *IEEE Transactions on Industry Applications,* vol. IA-19, pp. 14–20, Jan./Feb. 1983.

[B25] Cable, B. W., Powell, L. J., and Smith, R. L., "Application Criteria for High-Speed Bus Differential Protection," *IEEE Transactions on Industry Applications,* vol. IA-19, pp. 619–624, July/Aug. 1983.

[B26] Castenschiold, R., "Solutions to Industrial and Commercial Needs Using Multiple Utility Services and Emergency Generator Sets," *IEEE Transactions on Industry Applications,* vol. IA-10, pp. 205–208, Mar./Apr. 1974.

[B27] Conrad, R. R., and Dalasta, D. A., "New Ground-fault Protective System for Electrical Distribution Circuits," *IEEE Transactions on Industry and General Applications,* vol. IGA-3, pp. 217–227, May/June 1967.

[B28] Cummings, P. G., Dunki-Jacobs, J. R., and Kerr, R. H., "Protection of Induction Motors Against Unbalanced Voltage Operation," *IEEE Transactions on Industry Applications,* vol. IA-21, pp. 778–792, May/June 1985.

[B29] GET-6098, The Impact of Arcing Ground Faults on Low-Voltage Power System Design, General Electric Co., Dec. 1970.

Copyright The Institute of Electrical and Electronics Engineers, Inc.
Provided by IHS under license with IEEE
No reproduction or networking permitted without license from IHS Not for Resale

[B30] Goff, L. E., Rook, M. J., and Powell, L. J., "Pilot Wire Relay Applications in Industrial Plants Utilizing a New Static Pilot Wire Relay," *IEEE Transactions on Industry Applications,* vol. IA-16, pp. 395–404, May/June 1980.

[B31] Harder, E. L., Klemmer, E. H., Sonnemann, W. K., and Wentz, E. C., "Linear Couplers for Bus Protection," *AIEE Transactions,* vol. 61, pp. 241–248, May 1942.

[B32] Hoeingman, W. F., "Surge Protection for AC Motors: When Are Protective Devices Required?" *IEEE Transactions on Industry Applications,* vol. IA-19, pp. 836–843, Sept./Oct. 1983.

[B33] IEEE Committee Report, "Coordination of Lightning Arresters and Current-Limiting Fuses," *IEEE Transactions on Power Apparatus and Systems,* vol. PAS-91, pp. 1075–1078, May/June 1972.

[B34] IEEE Committee Report, "The Impact of Sine-Wave Distortions on Protective Relays," *IEEE Transactions on Industry Applications,* vol. IA-20, pp. 335–343, Jan./Feb. 1984.

[B35] IEEE Std C37.2-1991, IEEE Standard Electrical Power System Device Function Numbers (ANSI).

[B36] IEEE Std C37.13-1990, IEEE Standard Low-Voltage AC Power Circuit Breakers Used in Enclosures (ANSI).

[B37] IEEE Std C37.20.1-1987 (Reaff 1992), IEEE Standard for Metal-Enclosed Low-Voltage Power Circuit Breaker Switchgear (ANSI).

[B38] IEEE Std C37.35-1976 (Reaff 1992), IEEE Guide for the Application, Operation, and Maintenance of High-Voltage Fuses, Distribution Enclosed Single-Pole Air Switches, Fuse Disconnecting Switches, and Accessories (ANSI).

[B39] IEEE Std C37.40-1981 (Reaff 1987), IEEE Standard Service Conditions and Definitions for High-Voltage Fuses, Distribution Enclosed Single-Pole Air Switches, Fuse Disconnecting Switches, and Accessories (ANSI).

[B40] IEEE Std C37.41-1988, IEEE Standard Design Tests for High-Voltage Fuses, Distribution Enclosed Single-Pole Air Switches, Fuse Disconnecting Switches, and Accessories (ANSI).

[B41] IEEE Std C37.48-1987 (Reaff 1992), IEEE Guide for Applications, Operation, and Maintenance of High-Voltage Fuses, Distribution Enclosed Single-Pole Air Switches, Fuse Disconnecting Switches, and Accessories (ANSI).

[B42] IEEE Std C37.90-1989, IEEE Standard Relays and Relay Systems Associated with Electric Power Apparatus (ANSI).

Copyright The Institute of Electrical and Electronics Engineers, Inc.
Provided by IHS under license with IEEE
No reproduction or networking permitted without license from IHS Not for Resale

[B43] IEEE Std C37.91-1985 (Reaff 1991), IEEE Guide for Protective Relay Applications to Power Transformers (ANSI).

[B44] IEEE Std C37.96-1988, IEEE Guide for AC Motor Protection (ANSI).

[B45] IEEE Std C57.12.00-1987, IEEE Standard General Requirements for Liquid-Immersed Distribution, Power, and Regulating Transformers (ANSI).

[B46] IEEE Std C57.12.58-1991, IEEE Guide for Conducting a Transient Voltage Analysis of a Dry-Type Transformer Coil.

[B47] IEEE Std C57.12.59-1989, IEEE Guide for Dry-Type Transformers Through-Fault Current Duration (ANSI).

[B48] IEEE Std C57.13-1978 (Reaff 1986), IEEE Standard Requirements for Instrument Transformers (ANSI).

[B49] IEEE Std C57.94-1982 (Reaff 1987), IEEE Recommended Practice for Installation, Application, Operation, and Maintenance of Dry-Type General Purpose Distribution and Power Transformers (ANSI).

[B50] IEEE Std C57.106-1991, IEEE Guide for Acceptance and Maintenance of Insulating Oil in Equipment.

[B51] IEEE Std C57.109-1993, IEEE Guide for Liquid-Immersed Transformer Through-Fault-Current Duration.[1]

[B52] IEEE Std C57.111-1989, IEEE Guide for Acceptance of Silicone Insulating Fluid and Its Maintenance in Transformers.

[B53] IEEE Std C57.121-1988, IEEE Guide for Acceptance and Maintenance of Less Flammable Hydrocarbon Fluid in Transformers (ANSI).

[B54] IEEE Std C62.2-1987, IEEE Guide for the Application of Gapped Silicon-Carbide Surge Arresters for Alternating-Current Systems (ANSI).

[B55] IEEE Std 100-1992, The New IEEE Standard Dictionary of Electrical and Electronics Terms (ANSI).

[B56] IEEE Std 142-1991, IEEE Recommended Practice for Grounding of Industrial and Commercial Power Systems (IEEE Green Book) (ANSI).

[B57] IEEE Std 242-1986 (Reaff 1991), IEEE Recommended Practice for Protection of Coordination of Industrial and Commercial Power Systems (IEEE Buff Book) (ANSI).

[B58] IEEE Std 446-1987, IEEE Recommended Practice for Emergency and Standby Power Systems for Industrial and Commercial Applications (IEEE Orange Book) (ANSI).

[1]Some citations in this chapter refer to the 1985 edition of this standard.

Copyright The Institute of Electrical and Electronics Engineers, Inc.
Provided by IHS under license with IEEE
No reproduction or networking permitted without license from IHS Not for Resale

[B59] IEEE Std 1001-1988, IEEE Guide for Interfacing Dispersed Storage and Generating Facilities with Electric Utility Systems (ANSI).

[B60] Krick, J. B., and Potts, C. D., "Dynamic Fault Testing of Ground Sensing Relays," *IEEE Transactions on Industry Applications,* vol. IA-19, pp. 975–979, Nov./Dec. 1983.

[B61] Larner, R. A., and Gruesen, K. R., "Fuse Protection of High-Voltage Power Transformers," *AIEE Transactions (Power Apparatus and Systems),* pt. III, vol. 78, pp. 864–878, Oct. 1959.

[B62] Langhans, J. D., and Ronat, A. E., "Protective Devices Coordination via Computer Graphics," *IEEE Transactions on Industry Applications,* vol. IA-16, pp. 404–441, May/June 1980.

[B63] Lathrop, C. M., and Schleckser, C. E., "Protective Relaying on Industrial Power Systems," *AIEE Transactions,* pt. II, vol. 70, pp. 1341–1345, 1951.

[B64] *Maintenance Testing Specifications for Electric Power Distribution Equipment and Systems*, International Electrical Testing Association, Morrison, CO, 1993.

[B65] Mason, C. R., *The Art and Science of Protective Relaying*. New York: Wiley, 1956.

[B66] Mathur, B. K., "Service Supply-Line Protection—An Industrial Plant User's View, *IEEE Transactions on Industry Applications,* vol. IA-19, pp. 9–14, Jan./Feb. 1983.

[B67] McFadden, R. H., "Power-System Analysis: What It Can Do For Industrial Plants," *IEEE Transactions on Industry and General Applications,* vol. IGA-7, pp. 181–188, Mar./Apr. 1971.

[B68] NEMA AB 4-1991, Guidelines for Inspection and Preventative Maintenance of Molded-Case Circuit Breakers Used in Commercial and Industrial Applications.

[B69] NEMA BU 1.1-1991, Generals Instructions for Proper Handling, Installation, Operation, and Maintenance of Busway Rated 600 Volts or Less.

[B70] NEMA FU 1-1986, Low-Voltage Cartridge Fuses.

[B71] NEMA ICS 1-1988, General Standards for Industrial Control and Systems (partially revised by NEMA ICS 1-1992).

[B72] NEMA ICS 2.3-1983, Instructions for Handling, Installation, Operation, and Maintenance of Motor Control Centers.

[B73] NEMA MG 1-1993, Motors and Generators

[B74] NEMA PB 2.2-1988, Application Guide for Ground Fault Protective Devices for Equipment.

Copyright The Institute of Electrical and Electronics Engineers, Inc.
Provided by IHS under license with IEEE
No reproduction or networking permitted without license from IHS Not for Resale

[B75] NETA ATS-1990, Acceptance Testing Specifications (International Electrical Testing Association, Inc.).

[B76] Potochney, G. J., and Powell, L. J., "Application of Protective Relays on a Large Industrial-Utility Tie with Industrial Cogeneration," *IEEE Transactions on Industry Applications,* vol. IA-19, pp. 461–469, May/June 1983.

[B77] Powell, L. J., "An Industrial View of Utility Cogeneration Protection Requirements," *IEEE Transactions on Industry Applications,* vol. IA-24, pp. 75–81, Jan./Feb. 1988.

[B78] Shields, F. J., "The Problem of Arcing Faults in Low-Voltage Power Distribution Systems," *IEEE Transactions on Industry and General Applications,* vol. IGA-3, pp. 15–25, Jan./Feb. 1967.

[B79] St. Pierre, C. R., "Loss-of-Excitation Protection for Synchronous Generators on Isolated Systems," *IEEE Transactions on Industry Applications,* vol. IA-21, pp. 81–98, Jan./Feb. 1985.

[B80] St. Pierre, C. R., and Wolny, T. E., "Standardization of Benchmarks for Protective Device Time–Current Curves," *IEEE Transactions on Industry Applications,* vol. IA-22, pp. 623–633, July/Aug. 1986.

[B81] Weddendorf, W. A., "Evidence of Need for Improved Coordination and Protection of Industrial Power Systems," *IEEE Transactions on Industry and General Applications,* vol. IGA-1, pp. 393–396, Nov./Dec. 1965.

[B82] Wu, A. Y., "The Analysis of Current Transformers Transient Response and Its Effect on Current Relay Performance." *IEEE Transactions on Industry Applications,* vol. IA-21, pp. 793–802, May/June 1985.

Copyright The Institute of Electrical and Electronics Engineers, Inc.
Provided by IHS under license with IEEE
No reproduction or networking permitted without license from IHS Not for Resale

This page intentionally left blank

Copyright The Institute of Electrical and Electronics Engineers, Inc.
Provided by IHS under license with IEEE
No reproduction or networking permitted without license from IHS
Not for Resale

Chapter 6
Surge voltage protection

6.1 Nature of the problem

Transient overvoltages are due to natural and inherent characteristics of power systems. Overvoltages may be generated by lightning or by a sudden change of system conditions (such as switching operations, faults, load rejection, etc.), or both. Broadly, the overvoltage types are normally classified as lightning-generated and all others as switching-generated. The magnitude of these overvoltages can be above maximum permissible levels and therefore need to be reduced and protected against if damage to equipment and possible undesirable system performance are to be avoided.

A direct lightning stroke current surge will have the form of a steep front wave that will travel away from the stricken point in both directions along the power system conductors (figure 6-1). As the surge travels along the conductors, losses cause the magnitude of the voltage surge to constantly diminish. If the voltage magnitude is sufficient to produce corona, the decay of the voltage surge will be fairly rapid until below the corona starting voltage. Beyond this point the decay will be more deliberate. Properly rated surge arresters at the plant terminal of the incoming lines will generally reduce the overvoltage to a level the terminal station apparatus can withstand.

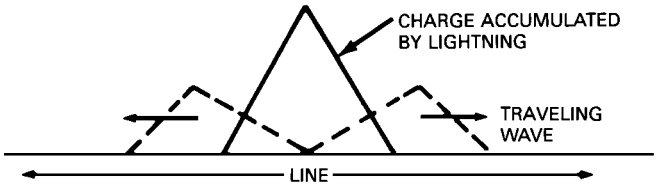

Figure 6-1—Two traveling bodies of charge result when a quantity of charge is deposited on conducting line by lightning

In instances where the local industrial plant system is without lightning exposure, except from the exposed high-voltage lines through step-down transformers effectively protected with high-side surge arresters, lightning surges are likely to be quite moderate. Likewise, surges due to switching phenomena, although more common, are generally not as severe. Only occasionally would line-to-ground potentials on the local system reach arrester-protective levels. The large number of radiating cable circuits with their array of connected apparatus acts to greatly curb the slope and magnitude of the voltage surge that reaches any particular item of connected apparatus. However, transformers and other equipment items connected as a single load at the end of circuits are particularly vulnerable. Experience has indicated that certain types of apparatus are susceptible to voltage surges for almost any circuit connection arrangement, and it is advisable to fully investigate the possibility of damaging voltage surges.

Copyright The Institute of Electrical and Electronics Engineers, Inc.
Provided by IHS under license with IEEE
No reproduction or networking permitted without license from IHS
Not for Resale

The occurrence of abnormal applied voltage stresses, either transient, short-time, or sustained steady-state, contributes to premature insulation failure. Electrical organic insulation deterioration to the point of failure results from an aggregate accumulation of insulation damage that finally reaches the critical stage, in which a conducting path is rapidly driven through the insulation sheath and failure (short circuit) takes place. Large amounts of current may then be driven through the faulted channel, producing large amounts of heat. An excessive increase in temperature results, which rapidly expands the zone of insulation damage, and complete destruction occurs rather quickly unless the supply of electric current is interrupted. Some insulation punctures that might be discovered after special nondestructive testing of apparatus will require repair or replacement.

The optimum method of avoiding insulation failure is having balanced, or coordinated, protection. An acceptable system of insulation protection will be influenced by a number of factors. Of prime importance is a knowledge of the insulation system withstand capability and endurance qualities. These properties are indicated by insulation-type designations and specified high-potential and surge-voltage test withstand capabilities. Another facet of the problem relates to the identification of likely sources of overvoltage exposure and the character, magnitude, duration, and repetition rate that are likely to be impressed on the apparatus and circuits. The appropriate application of surge-protective devices will lessen the magnitude and duration of surges as seen by the protected equipment, and is the most effective tool for achieving the desired insulation security. A working understanding of the behavior pattern of electric surge voltage propagation along electrical conductors is necessary to achieve the optimum solution. The problem is complicated by the fact that insulation failure results not only because of impressed overvoltages, but also because of the aggregate sum total duration of such overvoltages. No simple devices are available that can correctly integrate the cumulative effects of sequentially applied excessive overvoltage. The time factor must be estimated and then factored into the design and application of the protection system.

As stated, lightning is a major source of transient overvoltage. Some industrial operations use open-wire overhead lines that are subject to direct exposure to lightning, allowing lightning surges to be propagated into the industrial distribution system. However, many industrial complexes have cable entrances with surge-arrester protection installed at the overhead-to-underground junction. Although the surge arresters protect the cable entrance, they will not necessarily protect the substation equipment from incoming surges; additional arresters may have to be installed at the cable open-end point or last transformer.

Direct lightning strokes are rare to overhead outdoor plant wiring because of the shielding effect of adjacent structures. However, direct strokes to objects 25–50 ft away can induce substantial transient overvoltages into the overhead line. Surge arresters should be installed at the end of an overhead line that connects to the building wiring to minimize the effects of such induced transients. Another source of sudden overvoltage can be impressed on system conductors when they come into contact with conductors from a higher voltage system.

The National Electrical Safety Code (NESC) (Accredited Standards Committee C2-1993),[1] Rule 222C2, recommends that open conductors of different voltages installed on the same

[1]Information on references can be found in 6.8.

Copyright The Institute of Electrical and Electronics Engineers, Inc.
Provided by IHS under license with IEEE
No reproduction or networking permitted without license from IHS Not for Resale

support must have the highest voltage on top and the lowest voltage below. However, when a higher voltage conductor breaks for any reason, such as an automobile striking the supporting pole or a tree limb falling across the line, the higher voltage conductor may fall across the lower voltage conductor, impressing the higher voltage on the lower voltage circuit. In these cases, the arresters on the lower voltage line are likely to function and, should the impressed voltage exceed their temporary overvoltage capability, fail to ground causing a short on the line. To avoid extensive damage to line and equipment, the fault-current protective equipment at both line voltages should de-energize the lines as soon as possible.

Steep wave-front transient overvoltages are also generated in plant wiring by switching actions that change the circuit operation from one steady-state condition to another. Switching devices that tend to chop the normal ac wave, such as thyristors, vacuum switches, current-limiting fuses, and two- or three-cycle circuit breakers, force the current to zero, which accelerates the collapse of the magnetic field around the conductor, generating a transient overvoltage. The initial overvoltage spike resulting from the interrupting action of a current-limiting fuse is depicted in figure 6-2. Restriking current interruption of certain circuit configurations by the circuit switching device can also cause high-frequency transient overvoltages.

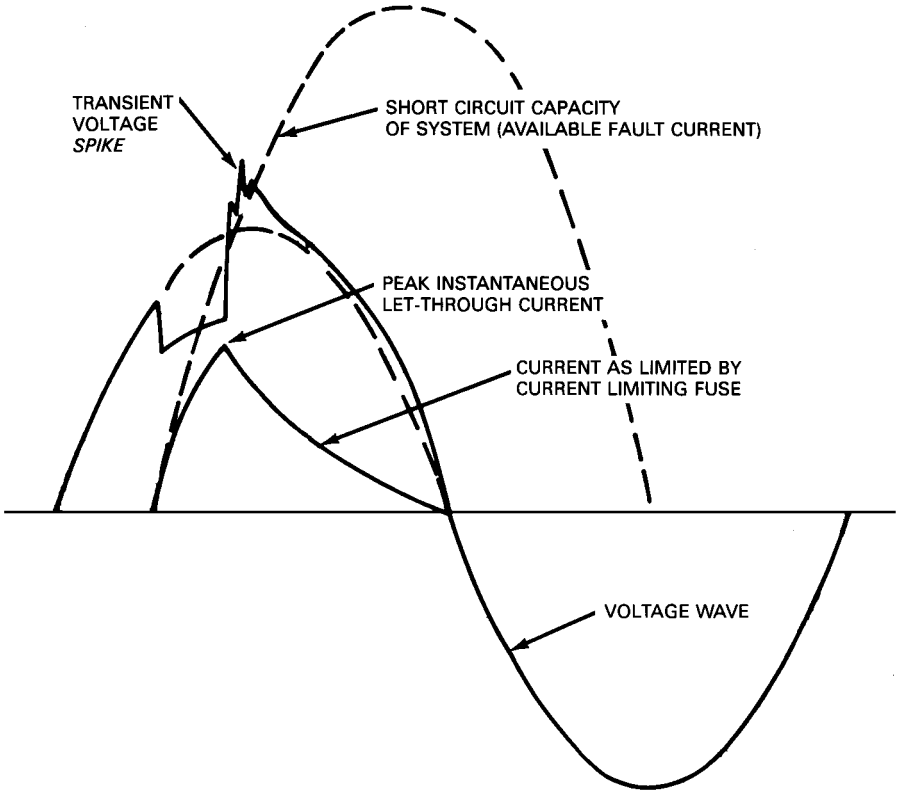

Figure 6-2—Oscillogram showing typical short-circuit current-limiting action of fuse to produce transient overvoltage

Copyright The Institute of Electrical and Electronics Engineers, Inc.
Provided by IHS under license with IEEE
No reproduction or networking permitted without license from IHS
Not for Resale

Figure 6-3 represents the switching of a shunt capacitor involving restriking during interruption of the capacitive current. Prior to the initial interruption, E_{cap} remained solidly referenced to E_A. At a capacitor current zero, an initial interruption of current is assumed to occur, at which time E_{cap} continues at fixed potential while E_A proceeds to reverse according to normal system operation at fundamental frequency. During the first half-cycle, E_A completely reverses its potential, which would cause twice the normal line-to-neutral crest voltage to appear across the open switching contact. Should the switch restrike, it suddenly changes from an insulator to a conductor. Since the capacitor voltage cannot change instantaneously (a fundamental property of capacitance), the required transition snaps the "A" phase conductor to the capacitor voltage. This is a steep-front snap transition. The line and capacitor together begin a transition oscillation toward where line "A" will eventually be at normal potential. A corresponding transitory capacitor restrike current is involved in this process that crosses and recrosses zero. At one of these zero crossings, conditions may be such as to permit another interruption, perhaps with E_{cap} at a greater potential than at the first interruption as illustrated. This would increase the possible step-voltage transition at the next restrike. This subject is covered in additional detail in Chapter 8, subclause 8.12.2.

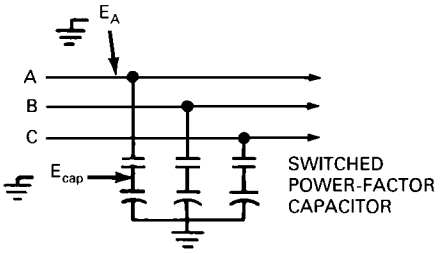

(a) Circuit arrangement

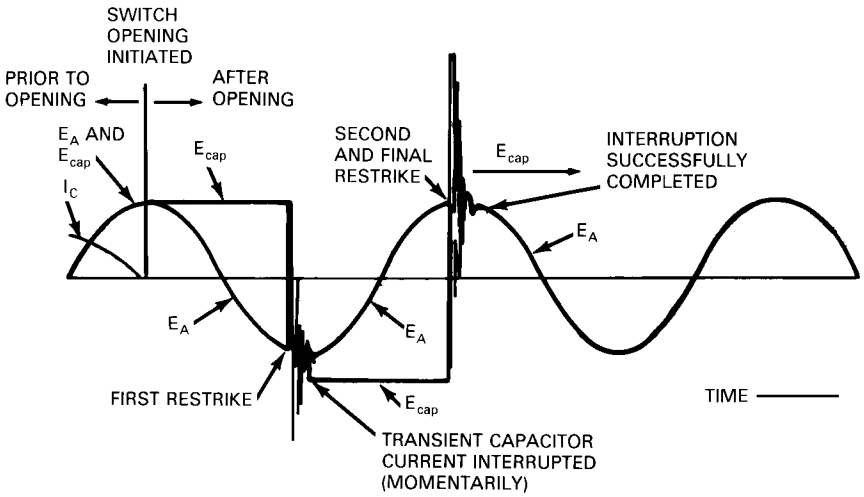

(b) Transient overvoltage character due to switch restrike during interruption

Figure 6-3—Equivalent circuit and transient response for capacitor switching restrike phenomena

--`,,`,,`-`-`,,`,,`,`,,`---

Copyright The Institute of Electrical and Electronics Engineers, Inc.
Provided by IHS under license with IEEE
No reproduction or networking permitted without license from IHS Not for Resale

In this manner, a 4160 V system may develop a steep-front step-voltage of $2 \cdot \sqrt{2} \cdot 4160 / \sqrt{3}$ = 6800 V on the first restrike with greater values possible on subsequent restrikes. Had the capacitor bank been ungrounded, as it usually is in most industrial systems, there would be opportunity for more than twice the line-to-neutral crest voltage to appear across the first pole to clear. In this example, only two restrikes occur. Additional restrikes would cause an even more dramatic overvoltage condition.

A short circuit (that is, insulation breakdown) is a switching action that creates a bypass around part of a circuit. The heat generated by the heavy flow of current across the short circuit may melt or even vaporize the conductor. As it does, it creates a gap with an arc. Heated air rising from the arc creates a draft causing the arc resistance to fluctuate rapidly, which produces transient overvoltages. An insulation failure results in an arc through the failure path with similar results. Overvoltages also can be generated as the nonlinear inductance of an iron-core transformer and a capacitor in the same circuit may go into oscillation and produce a condition of ferroresonance. Other sources of overvoltages are described in [B24][2] and [B25].

Transient overvoltages are propagated along the electric power conductors to create insulation stress far removed from the origin of the voltage surge. Furthermore, the voltage stress imposed on insulation far removed from the point of surge origin may exceed that appearing at the source point.

6.2 Traveling-wave behavior

6.2.1 Surge-voltage propagation

Electric power circuits transmit undesired surge voltages equally as well as power frequency voltages and can do so efficiently, even for frequencies into the megahertz range. When circuit geometry is short compared to wavelength, lumped circuit constants (*L, R, C*) often suffice for the particular analysis at hand. The usual concepts of line impedance, expressed as resistance and reactance in ohms, used in power-frequency computations do not, however, apply for the solution of short-time transitory voltages, such as lightning-produced waves traveling on typical power lines, cables, and other apparatus. When wavelengths (or wave fronts) are short compared to the lengths of circuitry involved, then it may be necessary to use a distributed-constant representation.

Figure 6-4 illustrates a distributed-constant electric overhead line, or a solid-insulated cable. Such a line can be viewed as consisting of a continued succession of small incremental series inductances with evenly distributed increments of shunt capacitance. When the switch SW is closed, the voltage *E* becomes connected to the line terminal. The first increment of capacitance is charged to a voltage *E*. Current begins to flow through the first increment of *L* to the next increment of shunt capacitance. The appearance of voltage along the line is always being

[2]The numbers in brackets preceded by the letter B correspond to those of the bibliography in 6.9.

Copyright The Institute of Electrical and Electronics Engineers, Inc.
Provided by IHS under license with IEEE
No reproduction or networking permitted without license from IHS
Not for Resale

impeded by the next incremental element of inductance. The voltage wave takes time to travel down the line.

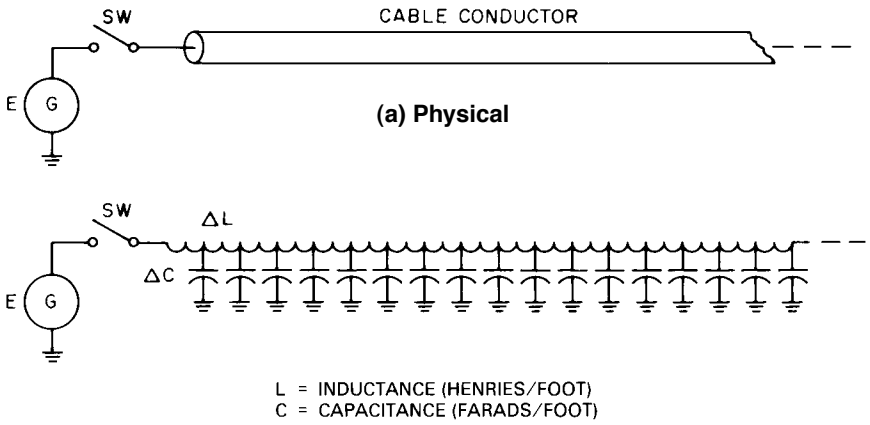

Figure 6-4—Distributed-constant transmission circuit

The electrical behavior of a distributed-constant transmission line can, for practical surge-voltage problems, be expressed in terms of the series inductance per unit length L and the shunt capacitance per identical unit of length C. Consider L in henries and C in farads.

Each elementary inductance has a surge voltage impressed upon it by an assumed traveling wave. The associated electromagnetic energy ($\frac{1}{2}LI^2$) and electrostatic energy ($\frac{1}{2}CE^2$) are expressed in joules (wattseconds) when units are as defined in figure 6-4. It is a profound property of traveling waves that the two forms of energy are of equal magnitudes and a surge impedance Z_0, which is equal to the voltage/current ratio.

$$Z_0 = E/I = \sqrt{L/C}$$

as depicted in figure 6-5. The equivalent distributed-constant relationships exist in apparatus (transformers, rotating machines, etc.) as well, but are somewhat more complex to analyze and visualize.

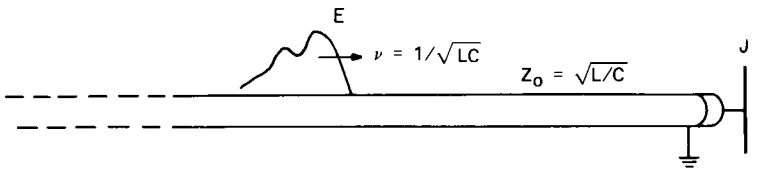

Figure 6-5—Surge-voltage wave in transit along a line of surge impedance Z_0

Copyright The Institute of Electrical and Electronics Engineers, Inc.
Provided by IHS under license with IEEE
No reproduction or networking permitted without license from IHS
Not for Resale

With the prescribed units, the quantity Z_0 has the dimensions of ohms and relates with E expressed in volts and I in amperes. The quantity is called the surge impedance and assigned the reference symbol Z_0. This symbol has no relation to the zero-sequence impedance, which uses the same symbol.

The applied voltage E and the surge current I are in phase. The current flow duplicates the wave shape of the impressed voltage and is in phase with it. At this point it appears exactly as a resistor of ohmic value $\sqrt{L/C}$, but the behavior differs from that of a resistor. In a true resistor the I^2R line loss energy is converted to heat. In the distributed-constant line the electric energy is stored in the inductance and capacitance as the $LI^2/2$ and $CE^2/2$ of an electric surge existing on a finite length of the transmission line.

The transit of the surge along the line is propagated at a rate controlled by the quantity LC. The propagation velocity is expressed as $1/\sqrt{LC}$. An increased value of the LC product slows down the transit rate. With the units chosen, the propagation velocity will be in feet per second. Had L and C been expressed in henries/meter and farads/meter, respectively, the propagation velocity would have the units of meters per second.

Ignoring the influence of the ground circuit impedance and various second-order effects on an open-wire line with air dielectric, the propagation velocity is approximately that of the speed of light, 1000 ft/μs (304.8 m/μs) or 1 ft/ns (30.48 cm/ns). A solid-insulation cable will display a propagation velocity about half that of the open-wire line.

Typical values of Z_0 are

200–400 Ω for overhead lines
20–50 Ω for solid dielectric cables

6.2.2 Surge-voltage reflection

In lines of infinite length, the surge of energy would continue to travel forever, never again to be observed at the point of origin. Since practical circuits have a finite length, problems develop as the surge reaches the end of the line.

All types of traveling waves (such as sound, light, current, or voltage) exhibit marked changes when the travel medium is changed. This is due to a new traveling “reflected” wave that is created when the original traveling wave impinges upon the change of travel medium. The reflected wave travels in each direction from this point of origin and is superimposed on the original wave (called the incident wave), adding to or subtracting from it.

Referring to figure 6-6, if at any instant E is the voltage of the incident wave at the junction, then $(E)(Z_2 - Z_1)/(Z_2 + Z_1)$ is the voltage of the reflected wave at the junction where Z_1 is the surge impedance of the first conductor (over which the surge arrived) and Z_2 is the surge impedance of the second conductor. The voltage of the refracted wave at the junction is the sum of the voltages of the incident and reflected waves; that is, it equals

$(E)(2Z_2)/(Z_2 + Z_1)$

Copyright The Institute of Electrical and Electronics Engineers, Inc.
Provided by IHS under license with IEEE
No reproduction or networking permitted without license from IHS
Not for Resale

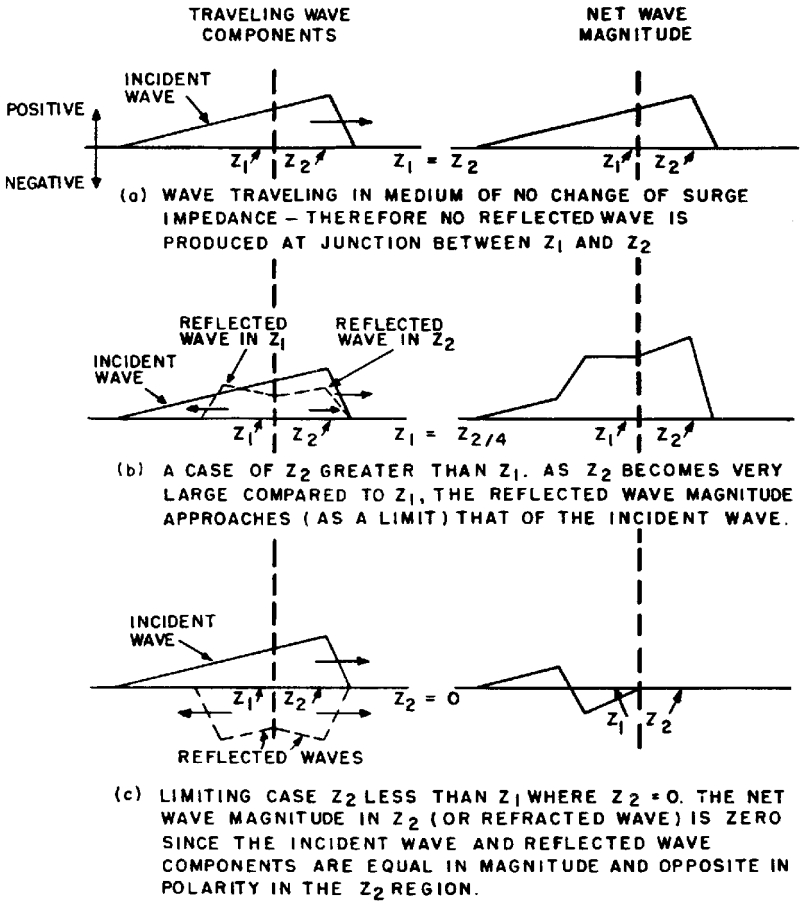

Source: [B21]

NOTE—The total wave magnitude prevailing is equal to the algebraic sum of the incident and reflected waves. This is the refracted wave at the junction of the surge impedances and in the Z_2 region.

Figure 6-6—Relative wave magnitudes (for given instant of time) along travel medium for given changes of surge impedance

Reflected and refracted current waves accompany the corresponding voltage waves, the constant of proportionality between them being the surge impedance Z_1 or Z_2 of the conductor the wave is traveling on. A reversal of direction of a voltage wave, without change in polarity, reverses the direction of flow of current.

As indicated by the equations, if Z_2 is greater than Z_1, a voltage wave reflects positively at the junction, and the voltage at the junction (equal to the voltage of the refracted wave) is greater

Copyright The Institute of Electrical and Electronics Engineers, Inc.
Provided by IHS under license with IEEE
No reproduction or networking permitted without license from IHS Not for Resale

than the voltage of the incident wave. In the limiting case of Z_2 infinite (i.e., line open), the voltage at the junction is double the voltage of the incident wave. On the other hand, if Z_2 is less than Z_1, the wave reflects negatively and the refracted wave is less than the incident wave. For the limiting case of Z_2 equal to zero (i.e., line short-circuited to ground), the voltage at the junction is equal to zero. The current-to-ground in this case will equal twice the current of the incident wave.

The equivalent circuit, shown in figure 6-7, allows evaluation of the effect of continuing along a line of different surge impedance that terminates at an open circuit, at a short circuit, or with a network of lumped constants. An electric surge E traveling along a transmission line of surge impedance Z_0 toward a junction J can be replaced by the equivalent circuit shown, that is, a driving voltage of twice the actual traveling-wave surge voltage magnitude in series with a resistor of ohmic value Z_0.

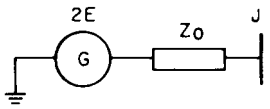

Figure 6-7—Equivalent circuit representing the arrival of surge at junction J

If at junction J every circuit that exists in the real system, whether a lumped impedance or distributed-constant line, is connected line to ground, the resulting network correctly satisfies the voltage-current relationships that will prevail at junction J. Every distributed-constant line connected to junction J is represented by a line-to-ground-connected resistor of ohmic value Z_0 for each respective line.

An examination of some familiar line-termination cases will aid in developing a conviction that the equivalent circuit is indeed a valid one.

a) An open-ended line at junction J [figure 6-8(a)]. The equivalent circuit yields the following, which we know to be correct:

   Junction J voltage = $2E$
   Line terminal current = 0

b) A short-circuited line at junction J [figure 6-8(b)]. Therefore, the equivalent circuit yields the following familiar relationships:

   Junction J voltage = 0
   Line terminal current = $2E/Z_0$

Copyright The Institute of Electrical and Electronics Engineers, Inc.
Provided by IHS under license with IEEE
No reproduction or networking permitted without license from IHS
Not for Resale

c) A line joining another line of equal surge impedance at junction J [figure 6-8(c)]. Again, the equivalent circuit correctly yields the following:

Junction J voltage = $2E(Z_0)/2Z_0$

Line terminal current = $2E/2Z_0$

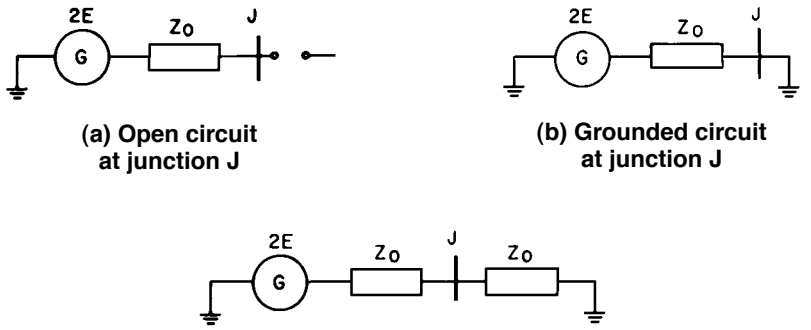

(a) Open circuit at junction J

(b) Grounded circuit at junction J

(c) Line continuation of equal surge impedance

Figure 6-8—Equivalent circuits representing a line terminated in different ways

The construction of an equivalent circuit for more complex combinations is accomplished using the techniques described. The simplest equivalent circuit used to accommodate distributed-constant lines is valid only until a returning reflected wave arrives at the junction under study. In many cases the entire critical voltage excursion at the bus under study will have passed before the first reflected wave returns.

To account for the effect of a returning reflected voltage wave, the correct equivalent circuit for surge arrival of that reflected wave at any bus must be created as if it were an independent surge voltage initially approaching the bus. The computed voltage that this reflected wave contributes to the bus is then added with proper polarity to that still being contributed at the bus by the initial surge. When more than a few wave reflections must be accepted, lattice diagram techniques should be used to ensure correct results ([B12], Chapter 9, p. 215).

The energy of a traveling wave can be dissipated completely if the traveling wave is directed to a junction whose equivalent circuit displays a real resistance termination of ohmic value equal to the Z_0 value of the transmission line. The wave energy is disposed of as heat in the terminating resistor. Although such terminating devices are seldom applied, they are sometimes called transient snubbers.

Copyright The Institute of Electrical and Electronics Engineers, Inc.
Provided by IHS under license with IEEE
No reproduction or networking permitted without license from IHS Not for Resale

6.2.3 Amplification phenomena

A surge-voltage wave traveling along a distributed- constant line, upon encountering a junction having a higher surge impedance Z_0, will increase in voltage to as much as double if the junction is terminated in an open circuit. A surge arrester installed a finite distance ahead of such a junction (figure 6-9) could result in a voltage at the junction well above the voltage at the arrester. The junction voltage rise will depend on the following:

a) The steepness of the surge voltage wave
b) The propagation velocity along the line
c) The distance of the line extension ΔD
d) The magnitude of surge impedance connected to the terminal junction.

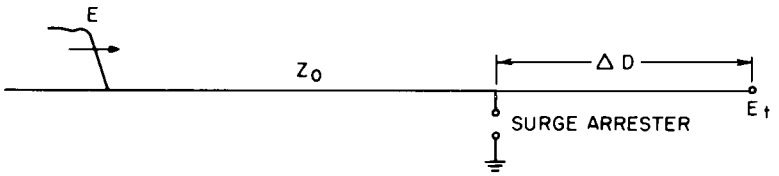

Figure 6-9—Transmission line extended beyond a surge-voltage arrester

The rise in terminal voltage will be aggravated by the following:

a) a steeper front wave
b) slower line propagation velocity
c) greater ΔD
d) greater magnitude of terminating surge impedance

As long as no other voltage is induced onto the line, the terminal voltage will not exceed twice the traveling-wave value with any possible value of parameters.

Many application charts are available that display the maximum ΔD for specific application conditions. With voltage wave fronts no steeper than 0.5 μs, a separation spacing ΔD of 25 ft (7.62 m) is generally allowable. The protection system design should locate the protective device as close to the terminals of the critical protected apparatus as is reasonable. Surge-voltage waves may have steeper fronts than the standard reference wave (IEEE Std C62.22-1991, Appendix C).

A traveling surge voltage, encountering in succession junctions with higher surge impedance, may have its voltage magnitude elevated to a value in excess of twice the magnitude of the initial voltage (figure 6-10). Assume the surge impedance of line sections 1 through 4 to be 10 Ω, 20 Ω, 40 Ω, and 70 Ω, respectively. Next, assume each line section to be long enough to contain the complete wave front, distributed along its length. At the junction between

Copyright The Institute of Electrical and Electronics Engineers, Inc.
Provided by IHS under license with IEEE
No reproduction or networking permitted without license from IHS
Not for Resale

sections 1 and 2, the refracted wave, which continues, will have a magnitude of 1.33*E*. This wave, encountering the junction between sections 2 and 3, would create a refracted wave of 1.78*E*. In like fashion, this voltage wave, in turn, encountering the junction of sections 3 and 4, would be increased to 2.27*E*. This voltage wave, upon reaching the open-end terminal at section 4, would be doubled to 4.54*E*.

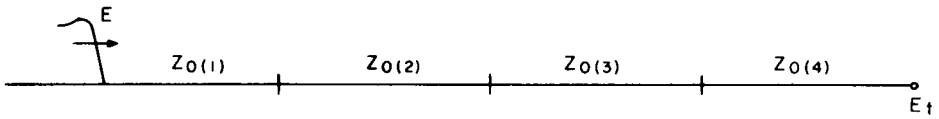

Figure 6-10—Voltage amplification by a series chain of line sections of progressively higher surge impedance

Typically, the change in surge impedance might result from a different cable construction, which may be additionally modified by a different number of cables run in multiple. The example might well have been represented by four 500 kcmil conductors in parallel in section 1, two in parallel in section 2, one alone in section 3, and a section of bus duct in section 4. The presence of an open-wire line (400 Ω Z_0) extension from a cable feeder (40 Ω Z_0) could, at an open-end terminal, develop a voltage of 3.64 times the surge voltage traveling in the cable.

In most instances, a surge voltage approaching a junction bus will encounter a surge impedance of lower value, resulting in a step down rather than a step up in voltage magnitude. Where step-up conditions exist, supplementary protective devices may be required.

6.3 Insulation voltage withstand characteristics

6.3.1 Introduction

Insulation standards have been developed that recognize the need for electrical equipment to withstand a limited amount of temporary excess voltage stress over and beyond the normal operating voltage. The ability of equipment insulation systems to survive these stresses (without unreasonable loss of life expectancy) is verified by overvoltage tests applied to electrical products at the completion of manufacture. A number of different tests have been developed and standardized for use in rating equipment. The physical structure of insulation systems determines the overvoltage withstand properties for electrical equipment. Some of the important physical considerations affecting the dielectric strength of insulation systems are given in 6.3.3.

6.3.2 Insulation tests and ratings

The most common standard factory tests are the 1 min, power-frequency applied (high potential) test and the 1.2/50 full-wave voltage impulse test. For low-voltage circuits of less than

Copyright The Institute of Electrical and Electronics Engineers, Inc.
Provided by IHS under license with IEEE
No reproduction or networking permitted without license from IHS Not for Resale

1000 V additional wave shapes are prescribed in IEEE Std C62.41-1991. Impulse/surge wave-shape terminology is illustrated in figure 6-11. The 1.2/50 designation means that a voltage impulse increases from virtual zero volts to its crest value in 1.2 μs (t_1 in figure 6-11) and declines to one-half crest value in 50 μs (t_2 in figure 6-11). The "μs" or "microsecond" notation is *not* included in the wave-shape designation. For practical reasons, the virtual zero time point on the voltage wave is established by a line drawn through the 30% and 90% points on the wave front (also illustrated in figure 6-11). The wave shape defined by this designation is indicated as the full-wave test in figure 6-12. Electrical power and distribution apparatus assigned a given insulation class should be capable of withstanding, without flashover or apparent damage, a 1.2/50 full-wave impulse test of specified crest kV. This specified crest voltage is the basic impulse insulation level (BIL) of the equipment. Typical values of test voltages in use today are shown in tables 6-1, 6-2, 6-3, and 6-4.

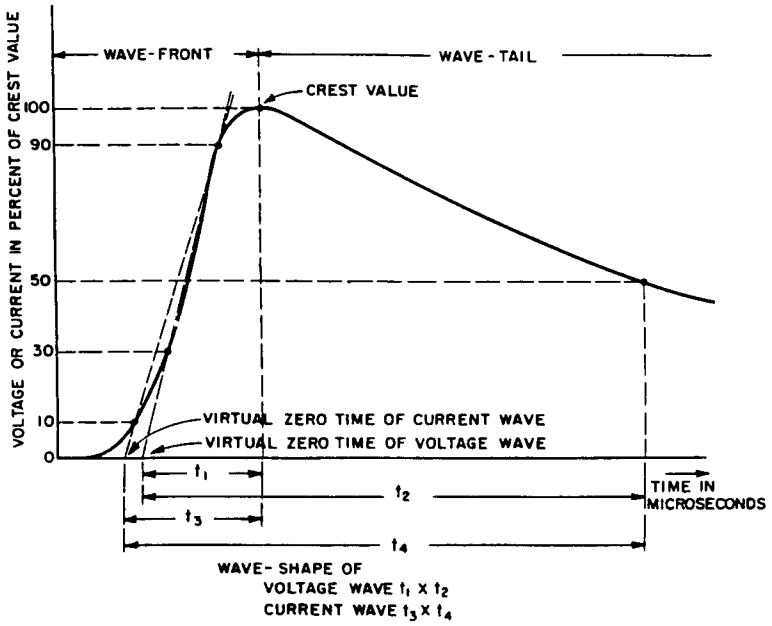

Source: [B6].

Figure 6-11—Terms used to describe voltage and current waves

Transformer insulation systems are generally required to be capable of withstanding other overvoltage tests besides the 60 Hz hi-pot and full-wave tests. Voltages for two of these tests, chopped-wave withstand and switching surge withstand, are indicated in table 6-1. For the chopped-wave test, a 1.2/50 wave with a crest voltage 10% or 15% higher than the full-wave (BIL) test is chopped by a suitable gap after the specified minimum time to flashover (table 6-1). The resulting wave shape, shown in figure 6-12, has a steep negative gradient that establishes certain withstand capabilities such as associated with sparkover of gap-type arresters or bushing flashover. The chopped-wave test stresses the turn-to-turn insulation more than the line-to-ground insulation, which is checked primarily by the full-wave test. The switching

Copyright The Institute of Electrical and Electronics Engineers, Inc.
Provided by IHS under license with IEEE
No reproduction or networking permitted without license from IHS
Not for Resale

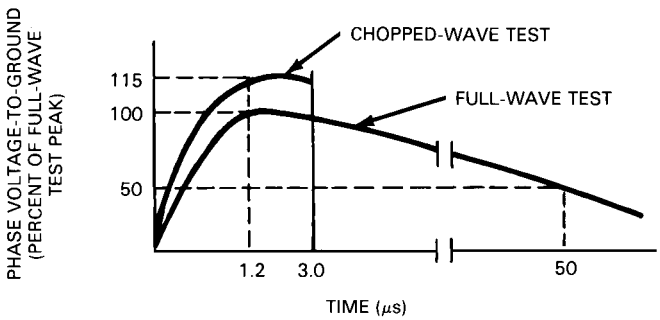

Figure 6-12—Standard impulse test waves

Table 6-1—Impulse test levels for liquid-immersed transformers

Insulation class and nominal bushing rating	Windings					Bushing withstand voltages		
	Hi-pot tests	Chopped wave		BIL full wave (1.2/50)	Switching surge level	60-cycle 1 min dry	60-cycle 10 s wet	BIL impulse full wave (1.2/50)
		Minimum time to flashover						
kV (rms)	kV (rms)	kV (crest)	μs	kV (crest)	kV (crest)	kV (rms)	kV (rms)	kV (crest)
1.2	10	54 (36)	1.5 (1)	45 (30)	20	15 (10)	13 (6)	45 (30)
2.5	15	69 (54)	1.5 (1.25)	60 (45)	35	21 (15)	20(13)	60 (45)
5.0	19	88 (69)	1.6 (1.5)	75 (60)	38	27 (21)	24 (20)	75 (60)
8.7	26	110 (88)	1.8 (1.6)	95 (75)	55	35 (27)	30 (24)	95 (75)
15.0	34	130 (110)	2.0 (1.8)	110 (95)	75	50 (35)	45 (30)	110 (95)
25.0	50	175	3.0	150	100	70	70 (60)	150
34.5	70	230	3.0	200	140	95	95	200
46.0	95	290	3.0	250	190	120	120	250
69.0	140	400	3.0	350	280	175	175	350
92.0	185	520	3.0	450	375	225	190	450
115.0	230	630	3.0	550	460	280	230	550
138.0	275	750	3.0	650	540	335	275	650
161.0	325	865	3.0	750	620	385	315	750

NOTE—Values in parentheses are for distribution transformers, instrument transformers, constant-current transformers, step- and induction-voltage regulators, and cable potheads for distribution cables. The switching surge levels shown are applicable only to power transformers (not distribution transformers). Test voltages are defined in IEEE Std C57.12.00-1980.

Copyright The Institute of Electrical and Electronics Engineers, Inc.
Provided by IHS under license with IEEE
No reproduction or networking permitted without license from IHS
Not for Resale

Table 6-2—Basic impulse insulation levels (BILs) of power circuit breakers, switchgear assemblies, and metal-enclosed buses

Voltage rating (kV)	BIL (kv)	Voltage rating (kV)	BIL (kV)	Voltage rating (kV)	BIL (kV)
2.4	45	23	150	115	550
4.16	60	34.5	200	138	650
7.2	75*	46	250	161	750
13.8	95	69	350	230	900
14.4	110	92	450	345	1300

*95 for metal-clad switchgear with power circuit breakers

Table 6-3—Impulse test levels for dry-type transformers

Nominal winding voltage (volts)		High-potential test	Standard BIL (1.2/50)
Delta or ungrounded wye	Grounded wye	kV (rms)	kV (crest)
120–1200		4	10
	1200Y/693	4	10
2520		10	20
	4360Y/2520	10	20
4160–7200		12	30
	8720Y/5040	10	30
8320		19	45
12 000–13 800		31	60
	13 800Y/7970	10	60
18 000		34	95
	22 860Y/13 200	10	95
23 000		37	110
	24 940Y/14 400	10	110
27 600		40	125
	34 500Y/19 920	10	125
34 500		50	150

NOTE—Data from IEEE Std C57.12.01-1979. Nominal voltages shown are exactly as tabulated in IEEE Std C57.12.01-1979 and are not, in all cases, in accordance with the classifications commonly encountered on industrial and commercial systems.

Copyright The Institute of Electrical and Electronics Engineers, Inc.
Provided by IHS under license with IEEE
No reproduction or networking permitted without license from IHS
Not for Resale

Table 6-4—Rotating machine high-potential test and winding impulse voltages, phase-to-ground

	Rated motor voltage (volts)					
	460	**2300**	**4000**	**4600**	**6600**	**13 200**
60 Hz, 1 min high-potential test voltage						
Crest value (kilovolts)	2.71	7.92	12.73	14.43	20.10	38.80
Per unit of normal crest	7.21	4.22	3.90	3.84	3.73	3.60
Impulse strength*						
Crest value (kilovolts)	3.39	9.90	15.91	18.00	25.10	48.50
Per unit of normal crest	9.01	5.27	4.87	4.80	4.66	4.50

NOTE—Data from ANSI C50.10-1990 and ANSI C50.13-1989 for synchronous motors, NEMA MG 1-1993 for induction motors, and [B12].

*The 1.2/50 full wave test does not apply to rotating machines. See figure 6-13 and related discussion.

surge level test certifies the capability of an insulation system to withstand the transient overvoltages produced by such conditions as arcing ground faults or the switching of capacitor banks, lines, or transformers.

The impulse voltage waves used in switching surge level tests are based on the characteristics of these voltage disturbances, which may be generally described as much slower than those caused by lightning. Since some switching phenomena may produce very fast front waves, to characterize all switching surges as slow can be misleading. IEEE Std C62.11-1987 has adopted slow-front as being preferable to the designation switching surge. The test standard requires that the gapless surge arresters be tested with a wave shape having a wave front time of 45–60 μs. Typical transformer switching surge test crest voltages, which are 83% of the BIL for transformers of 45 kV BIL and higher, are listed in table 6-1. One other test, which is sometimes specified as another check on the strength of turn-to-turn insulation, is the front-of-wave test. The front-of-wave test is similar to the chopped-wave test except the voltage is higher, and the impulse is chopped on the rising front of the wave before the normal crest.

Tables 6-1, 6-2, and 6-3 provide a general picture of the standardized impulse capabilities of transformers and switchgear. These voltage withstand characteristics are useful for coordinating the equipment capabilities with the protective characteristics of surge arresters, an analytical procedure known as insulation coordination. The subject of insulation coordination is discussed in 6.6.2. Comparison of tables 6-1 and 6-3 shows that the BILs of standard dry-type transformers are relatively low (higher BIL dry-type transformers can be acquired with additional cost). Also, the insulation strength of standard dry-type transformers does not increase appreciably as the duration of the applied impulse decreases.

Open-wire lines vary somewhat in their impulse withstand capacity depending upon such factors as design construction, maintenance, and weather, but are generally considered well

Copyright The Institute of Electrical and Electronics Engineers, Inc.
Provided by IHS under license with IEEE
No reproduction or networking permitted without license from IHS Not for Resale

above associated transformers in this respect. An open-wire 13.8 kV distribution circuit, for example, is typically considered to have a 150–500 kV BIL. While cables do not have assigned BILs, they too have impulse capability significantly higher than associated liquid-immersed transformers.

Rotating machines, like standard dry-type transformers, have relatively low impulse strength and have no established, standardized BILs. Rotating machines do, however, have standard high-potential test voltage values (shown in table 6-4), which have become important in the application of surge protection. An IEEE Working Group report [B19] contains a proposed voltage-time boundary (figure 6-13) where the maximum impulse voltage is 1.25 times the crest value of the standard high-potential test voltages. These values are also shown in table 6-4.

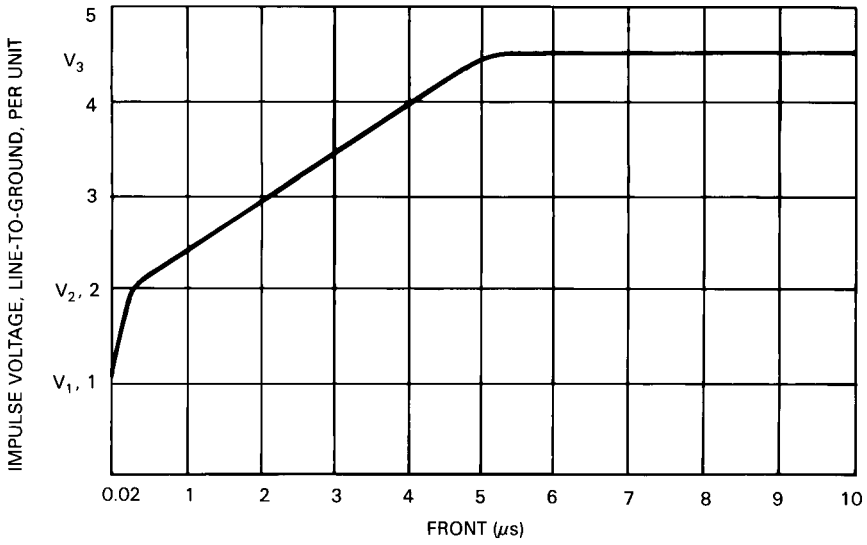

For V_L = machine voltage rating line-to-line rms kV:
$V_1 = \sqrt{2/3}\ V_L$ = 1 PER UNIT CREST LINE-TO-GROUND
$V_2 = 2\ V_1$
$V_3 = 1.25\ \sqrt{2}\ (2\ V_L + 1)$, kV CREST VALUE

Figure 6-13—Machine impulse voltage withstand envelope

6.3.3 Physical properties affecting insulation strength

For each item of electrical apparatus to be protected, the security of major insulation (line-to-ground) and, where applicable, turn insulation (turn-to-turn) should be considered separately.

Circumstances will exist in which one of these organic insulation systems may be over-stressed, while the other one is not subjected to any abnormal stress at all. The security of each must be independently examined and protected as necessary.

Copyright The Institute of Electrical and Electronics Engineers, Inc.
Provided by IHS under license with IEEE
No reproduction or networking permitted without license from IHS
Not for Resale

One of the confusing aspects of an organic insulation system capability and its protection is the progressive accumulation of deterioration within the dielectric that results from the complete history of voltage stress exposure. An item of equipment subjected to a 60 Hz high-potential test may withstand the voltage application for 50 seconds and then break down. The device failed the test. It may have withstood the voltage application for the entire specified/required 60-second period and passed the test, but it might have failed had the test voltage been continued for another 10 cycles.

With certain types of electric apparatus having a combination of liquid and solid insulation systems, the cumulative stress failure mechanism only occurs within a narrow band of stress voltages just below the breakdown voltage. Exposure to a lesser overvoltage may initially cause an incomplete failure of the solid insulation, but the subsequent penetration by the liquid material will partially repair the deteriorating region.

In all cases, a large fraction of the insulation system's capability to withstand applied voltage can be destroyed simply by the process of testing it. For this reason overtesting with dynamic ac voltage should be avoided. Direct-current testing is preferred. The design of the electric system, including the use of surge suppression devices (to assure adequate insulation security), should correctly interpret the effect of the inverse relationship between imposed voltage magnitude and the allowable duration. A 30% increase in the applied ac voltage magnitude for most equipment will result in a tenfold reduction in insulation life. The high-magnitude surges require careful attention because of the very rapid loss of life. The system design engineer must, largely by judgment, set the margin of safety between the design controls of allowed overvoltage exposure and the certified withstand capability of the insulation system, based on ones knowledge of the probable character and repetition rate of troublesome surge voltage transients.

The problems relating to the achievement of insulation security for turn-to-turn insulation in multi-turn coils are many and complex. The normal 60 Hz voltage developed in a single turn will range from perhaps a small fraction of 1 V in a contactor magnet coil to 20 V in a medium-sized induction motor to several hundred volts in a large transformer. If it were necessary to only insulate for this normal operating voltage developed in a single turn, the problem would be simple. However, the voltage stress that appears across a single turn-to-turn insulation element when high rate-of-rise voltage surges occur may be much greater than the single-turn operating voltage.

This aggravated voltage stress is most pronounced at turn insulation adjacent to the coil terminals and is intensified by the increased shunt capacitance between winding sections and ground, such as exists inherently in motor windings as a result of each coil in the construction being surrounded by grounded stator core iron.

The controlling parameters (figure 6-14) are the elemental values of coil series inductance ΔL, the elemental values of capacitance C_S shunting the above elemental coil segments, and the elemental capacitance to ground C_G.

Under normal 60 Hz excitation, the voltage distribution is controlled almost entirely by the series-connected chain of elemental coil inductances, creating equal division of the

--`,,`,,`,`,,`---
Copyright The Institute of Electrical and Electronics Engineers, Inc.
Provided by IHS under license with IEEE
No reproduction or networking permitted without license from IHS Not for Resale

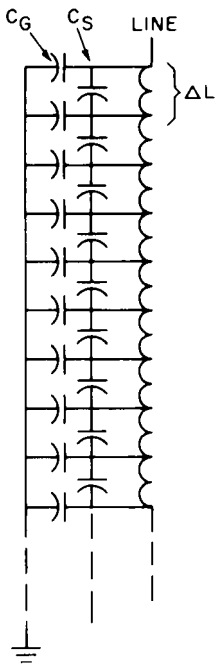

Figure 6-14—LC network in a multi-turn winding

impressed voltage across all turns. A steep-front voltage applied to the line terminal creates an entirely different pattern of distributed voltage. Consider the incoming voltage wave to be a step voltage of infinite rate of rise. If only the turn shunting capacitance C_S were present, the incoming transient overvoltage would be uniformly distributed. The distributed capacitive coupling to ground C_G is responsible for the non-uniform voltage distribution. Note that each elemental capacitance to ground C_G tends directly to hold the coil turns with which it is coupled at ground potential. If C_S were zero, a step voltage at the terminal would create full voltage at the terminal end of the first coil. The inner end of the first coil, and all coils deeper in the winding, would remain at ground potential as controlled by C_G. Only as current flow begins through the first coil inductance ΔL could any voltage appear across any C_G (except the one unit at the terminal). Thus the initial voltage distribution would display the full surge voltage across the terminal coil with zero voltage across all coils deeper in the winding.

Following the initial steep-front voltage application, current flow will build up in the ΔL, which will redistribute the voltage more uniformly. In the process, the internal L–C oscillations will create a voltage drop across some inner coil (or coils) substantially greater than the uniform-distribution value, but seldom as great as the initial voltage stress across the terminal coil.

In an actual motor winding, a very high percentage (upwards of 90%) of an applied surge voltage with a 0.1 μs front can appear across the terminal coil. Unfortunately, the internal electric network by which most apparatus can be represented is not commonly found in

Copyright The Institute of Electrical and Electronics Engineers, Inc.
Provided by IHS under license with IEEE
No reproduction or networking permitted without license from IHS
Not for Resale

equipment specifications or industry standards. In the case of rotating machines, a guide to achieve turn-insulation security is presented in 6.7.3.9.

6.4 Arrester characteristics and ratings

6.4.1 Introduction

Historically, the evolution of surge arrester material technology has produced various arrester designs culminating in the so-called valve-type arrester, which has been used practically exclusively on power system protection for several decades. The active element (called valve element) in these arresters is a nonlinear resistor that exhibits relatively high resistance (megohms) at system operating voltages, and a much lower resistance (ohms) at fast rate-of-rise surge voltages. In all applications, arresters are exposed to continuous system fundamental frequency voltages. Arresters must exhibit high resistance at these voltages. Low resistance at surge voltage is desirable for the arresters to achieve satisfactory surge protection. Obviously, the greater the nonlinearity of the valve element, the greater the protective efficiency.

For several decades valve elements were composed of silicon carbide (SIC), a dense sintered ceramic-like material. Since silicon carbide valve elements of sufficiently low resistance to achieve effective surge protection were too low in resistance to be exposed to the continuous system operating voltage, it was necessary to isolate them from the system operating voltage with series gaps. Internally designed gaps were used in series with the silicon carbide valve elements to produce the optimum surge-protective characteristics for this technology. These surge arresters are now commonly called “gapped silicon carbide” arresters, and many such surge arresters are still in service on power systems today.

In the mid 1970s, arresters with metal-oxide valve elements were introduced. These metal-oxide arresters have valve elements (also of sintered ceramic-like material) of a much greater nonlinearity than silicon carbide arresters, and series gaps are no longer required. Some metal-oxide designs employ the use of a modified gap design that retains the essential protective advantages of gapless construction. As such, the metal-oxide designs offer improved protective characteristics and improvement in various other characteristics, as compared to the silicon-carbide designs. As a result, the metal-oxide arrester has replaced the gapped silicon-carbide arrester, in virtually all new applications.

In the mid-1980s polymer housings appeared and began to replace porcelain housings on metal-oxide surge arresters offered by some manufacturers. The polymer housings are made of either EPDM or silicone rubber. First the distribution arrester housings were made with polymer, and later expanded to the intermediate and some station class ratings. This new housing material reduces the risk of injuries and/or equipment damage due to surge arrester failures.

Silicon-carbide arresters are not covered in this publication. Some specifics of comparison between the metal-oxide and silicon carbide arresters are presented in [B49].

The most authoritative information regarding the testing and application of silicon carbide arresters can be found in IEEE Std C62.1-1989 and IEEE Std C62.2-1987.

Copyright The Institute of Electrical and Electronics Engineers, Inc.
Provided by IHS under license with IEEE
No reproduction or networking permitted without license from IHS Not for Resale

IEEE Std C62.11-1987 and IEEE Std C62.22-1991 are two IEEE arrester standards of particular interest for medium- and high-voltage protection as they relate to metal-oxide technology. Much of the information presented here will be extracted from or referenced to these standards, as they represent the latest source of information.

6.4.2 Metal-oxide arresters

The valve element of the metal oxide arrester is processed in a manner similar to that of the silicon carbide arrester, by pressing their respective ingredients into discs and sintering at high temperature into a dense ceramic. The nonlinearity of the metal oxide valve element, however, is much greater than the silicon carbide valve. For instance if

$I = kV^{\alpha}$
α = 10 for silicon carbide
α = 50 for metal oxide

Figure 6-15 compares the relative degree of nonlinearity of the metal oxide versus silicon carbide materials by a normalized log–log plot of volts (per millimeter of disc thickness) versus amperes (per square centimeter of disc area).

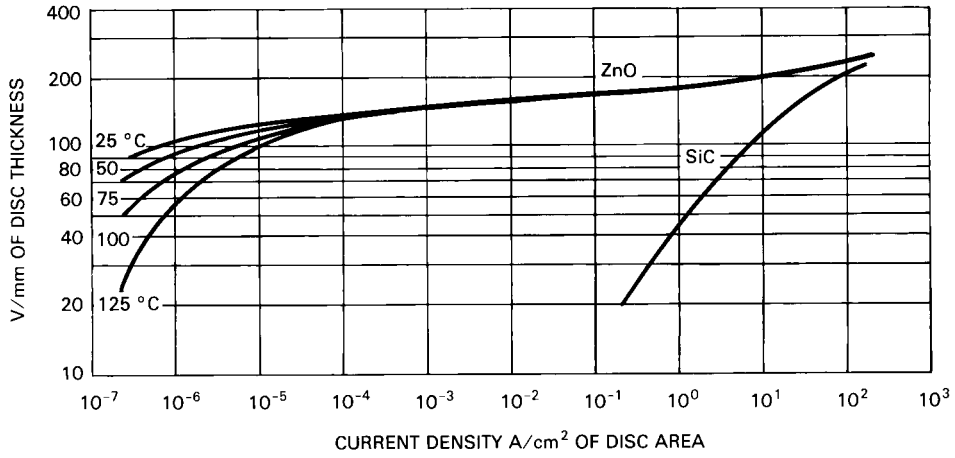

Source: [B49]

Figure 6-15—Typical voltage-ampere characteristics of zinc oxide and silicon carbide valve-element discs

6.4.3 Basis of arrester rating

Metal-oxide surge arresters have a dual (fundamental-frequency [rms]) voltage rating, a so-called duty-cycle voltage rating, and a corresponding maximum continuous operating voltage rating (MCOV).

Copyright The Institute of Electrical and Electronics Engineers, Inc.
Provided by IHS under license with IEEE
No reproduction or networking permitted without license from IHS
Not for Resale

IEEE Std C62.11-1987 defines duty-cycle voltage as, "the designated maximum permissible voltage between its terminals at which an arrester is designed to perform its duty cycle." The duty cycle is the *duty-cycle test* which serves to establish the ability of the arrester to discharge impulse current while energized at duty-cycle voltage and thermally recover at MCOV. For arresters applied to medium- and high-voltage systems up to 550 kV, the test involves the application of twenty high-current impulses (5000 or 10 000 A, 8/20 μs). The interval between impulses is 50–60 seconds. The associated impulse current magnitudes are the "classifying" current magnitudes by which arrester classes are established (see 6.4.5).

The maximum designated root-mean-square (rms) maximum continuous operating voltage (MCOV) value is the power-frequency voltage that may be applied continuously between the terminals of the arrester.

Note that arresters are rated on the basis of the associated applied system power-frequency voltage and not in relation to their surge-protective characteristics.

6.4.4 Protective characteristics

Metal-oxide arrester protective characteristics are provided in terms of the maximum voltage associated with discharging a specified magnitude of surge current through them. Three categories of protective voltage characteristics are established by industry standards (and commonly published by arrester manufacturers) which relate to three specific discharge current wave shapes. They are (1) front-of-wave (FOW) protective level, (2) lightning impulse protective level (LPL), also referred to as the discharge voltage (*IR*) of the surge arrester, and (3) switching impulse protective level (SPL).

The front-of-wave (FOW) protective level is defined in IEEE Std C62.11-1987 as "the higher of (1) crest discharge voltage resulting from a current wave through the arrester of lightning impulse classifying current (defined in 6.4.5) magnitude with a rate-of-rise high enough to produce arrester crest voltage in 0.5 μs or (2) gap sparkover voltage on similar wave shapes." The lightning impulse classifying current ranges between 1.5 kA and 20 kA depending on arrester class and voltage rating (IEEE Std C62.11-1987).

The *IR* is the voltage that appears across the arrester when a standard 8/20 current wave is conducted through the arrester. In published information the *IR* values are associated with a range of 8/20 current magnitudes. See tables 6-5 and 6-6, which list arrester protective characteristics.

The SPL is defined in IEEE Std C62.11-1987 as "the higher of (l) the discharge voltage with a current wave through an arrester of switching impulse classifying current magnitude and a time of actual current crest of 30–2000 μs, or (2) gap sparkover on similar wave shape." The switching surge classifying current ranges between 500 A and 2000 A, depending on voltage, and applies to station class and intermediate class arresters (IEEE Std C62.11-1987).

Arrester standard IEEE Std C62.11-1987 specifies various wave shape tests whereby protective levels of metal-oxide surge arresters are evaluated. Arrester manufacturers list performance characteristics based on these wave shapes. The two tests most frequently used for such listings are the front-of-wave and the 8/20 wave discharge test (*IR*).

Copyright The Institute of Electrical and Electronics Engineers, Inc.
Provided by IHS under license with IEEE
No reproduction or networking permitted without license from IHS Not for Resale

Copyright The Institute of Electrical and Electronics Engineers, Inc.
Provided by IHS under license with IEEE
No reproduction or networking permitted without license from IHS

Table 6-5—Station and intermediate-class (MOV) arrester characteristics

Arrester rating kV rms		Maximum front-of-wave protective level kV crest		Maximum discharge voltage (kV crest) at indicated impulse current for an 8/20 wave												Maximum switching surge protective level kV crest	
				1.5 kA		3 kA		5 kA		10 kA		20 kA		40 kA			
Duty cycle	MCOV	Sta	Int	Sta	Int	Sta	Int	Sta	Int	Sta	Int	Sta	Int	Sta	Int	Sta	Int
3.0	2.55	9.1	10.4	6.9	6.6	7.2	7.2	7.5	7.5	8.0	8.2	9.0	9.3	10.3	10.8	6.3	5.9
6.0	5.10	17.9	18.9	13.6	13.1	14.2	14.2	14.8	14.9	15.8	16.2	17.7	18.2	20.3	21.2	12.4	11.7
9.0	7.65	26.6	30.5	20.2	22.0	21.1	23.5	22.0	25.0	23.5	26.0	26.4	31.5	30.2	38.0	18.4	20.0
10.0	8.4	29.3	33.5	22.2	24.5	23.3	28.0	24.2	27.5	25.9	29.0	29.1	35.0	33.3	42.0	20.3	22.5
12.0	10.2	35.5	41.0	26.9	30.0	28.2	31.5	29.4	34.0	31.4	35.5	35.2	42.5	40.4	51.0	24.6	27.5
15.0	12.7	44.2	51.0	33.5	37.0	35.1	39.5	36.6	42.0	39.1	44.0	43.9	52.5	50.3	63.5	30.6	34.0
18.0	15.3	53.3	61.0	40.4	44.5	42.3	48.0	44.1	50.0	47.1	52.0	52.8	63.0	60.6	77.0	36.8	40.5
21.0	17.0	59.1	68.5	44.8	49.5	46.9	53.5	48.9	56.0	52.3	59.0	58.7	70.5	67.2	95.5	40.9	45.5
24.0	19.5	67.8	78.0	51.4	57.0	53.8	60.0	56.1	65.0	60.0	67.0	67.3	81.0	77.1	98.0	46.9	52.0
27.0	22.0	76.5	88.0	58.0	64.0	60.8	68.5	63.3	72.0	67.7	76.0	75.9	91.0	87.0	110.0	52.9	58.5
30.0	24.4	84.9	97.5	64.3	71.0	67.4	76.0	70.3	80.0	75.1	84.5	84.2	101.0	96.5	122.0	58.7	66.0
36.0	29.0	101.0	116.0	76.4	84.0	80.0	91.0	83.4	96.5	89.2	101.0	100.0	121.0	115.0	145.0	69.7	78.0
39.0	31.5	110.0	126.0	83.0	91.5	86.9	98.0	90.6	104.0	96.9	109.0	109.0	131.0	125.0	158.0	75.8	84.0
45.0	36.5	128.0	146.0	96.8	106.0	102.0	114.0	106.0	120.0	113.0	126.0	127.0	152.0	146.0	183.0	88.3	97.0
48.0	39.0	136.0	156.0	103.0	113.0	108.0	122.0	113.0	129.0	120.0	135.0	135.0	163.0	155.0	195.0	93.8	104.0
54.0	42.0	135.0	168.0	105.0	122.0	112.0	130.0	115.0	138.0	122.0	145.0	136.0	174.0	151.0	210.0	98.0	112.5
60.0	48.0	154.0	191.0	120.0	139.0	127.0	149.0	131.0	157.0	139.0	165.0	155.0	198.0	173.0	239.0	110.0	127.0
72.0	57.0	183.0	227.0	142.0	165.0	151.0	177.0	156.0	187.0	165.0	196.0	184.0	236.0	205.0	284.0	131.0	151.0
90.0	70.0	223.0	280.0	174.0	203.0	184.0	218.0	190.0	230.0	202.0	242.0	226.0	290.0	251.0	351.0	161.0	186.0
90.0	74.0	236.0	294.0	185.0	214.0	195.0	230.0	202.0	242.0	214.0	255.0	237.0	306.0	266.0	370.0	169.0	196.0
96.0	76.0	242.0	303.0	190.0	220.0	201.0	236.0	208.0	249.0	220.0	262.0	245.0	314.0	274.0	379.0	175.0	201.0
108.0	84.0	267.0	335.0	209.0	244.0	221.0	261.0	229.0	276.0	243.0	290.0	271.0	348.0	301.0	420.0	193.0	223.0
108.0	88.0	279.0	350.0	219.0	254.0	232.0	273.0	239.0	288.0	254.0	303.0	284.0	364.0	316.0	439.0	202.0	233.0
120.0	98.0	311.0	390.0	244.0	284.0	257.0	304.0	266.0	321.0	283.0	336.0	315.0	406.0	351.0	490.0	231.0	260.0
132.0	106.0	340.0	—	264.0	—	280.0	—	289.0	—	306.0	—	342.0	—	381.0	—	249.0	—
144.0	115.0	368.0	—	287.0	—	303.0	—	314.0	—	332.0	—	369.0	—	413.0	—	271.0	—
168.0	131.0	418.0	—	326.0	—	345.0	—	357.0	—	379.0	—	421.0	—	470.0	—	308.0	—
172.0	140.0	446.0	—	348.0	—	368.0	—	381.0	—	404.0	—	448.0	—	502.0	—	330.0	—
180.0	144.0	458.0	—	359.0	—	380.0	—	392.0	—	417.0	—	463.0	—	517.0	—	339.0	—
192.0	152.0	483.0	—	379.0	—	401.0	—	414.0	—	440.0	—	488.0	—	546.0	—	360.0	—
228.0	180.0	571.0	—	447.0	—	474.0	—	489.0	—	520.0	—	578.0	—	645.0	—	424.0	—

Not for Resale

Copyright The Institute of Electrical and Electronics Engineers, Inc.
Provided by IHS under license with IEEE
No reproduction or networking permitted without license from IHS

Table 6-6—Distribution-class and riser pole MOV arrester characteristics*

Arrester rating kV rms		Maximum front-of-wave protective level kV crest			Maximum discharge voltage (kV crest) at indicated impulse current for an 8/20 wave																		Maximum switching surge protective level kV crest		
					1.5 kA			3 kA			5 kA			10 kA			20 kA			40 kA					
Duty cycle	MCOV	ND	HD	RP	ND	HD	RP	ND	HD	RP	ND	HD	RP	ND	HD	RP	ND	HD	RP	ND	HD	RP	ND	HD	RP
3.0	2.55	12.5	12.5	—	9.8	9.5	—	10.3	10.0	—	11.0	10.5	—	12.3	11.0	—	14.3	13.0	—	18.5	15.3	—	8.5	8.0	—
6.0	5.1	25.0	25.0	17.4	19.5	19.0	13.0	20.5	20.0	14.0	22.0	21.0	14.7	24.5	22.0	16.2	28.5	26.0	18.1	37.0	30.5	21.1	17.0	16.0	11.7
9.0	7.65	33.5	34.0	25.7	26.0	24.5	19.3	28.0	26.0	21.0	30.0	27.5	21.9	33.0	30.0	24.0	39.0	35.0	27.0	50.5	41.0	31.6	23.0	22.5	17.5
10.0	8.4	36.0	36.5	28.5	27.0	26.0	21.2	29.5	28.0	23.0	31.5	29.5	24.0	36.0	32.0	26.5	41.5	37.5	29.8	53.0	43.5	34.8	24.0	23.5	19.2
12.0	10.2	50.0	50.0	34.8	39.0	38.0	25.9	41.0	40.0	28.0	44.0	42.0	29.4	49.0	44.0	32.3	57.0	52.0	36.2	74.0	61.0	42.2	34.0	32.0	23.3
15.0	12.7	58.5	59.0	43.1	45.5	43.5	32.3	48.5	46.0	36.0	52.0	48.5	36.6	57.5	52.0	40.2	67.5	61.0	46.1	87.5	71.5	52.7	40.0	38.5	29.1
18.0	15.3	67.0	68.0	51.4	52.0	49.0	38.6	56.0	52.0	41.9	60.0	55.0	43.8	66.0	60.0	48.0	78.0	70.0	54.0	101.0	82.0	63.2	46.0	45.0	34.9
21.0	17.0	73.0	75.0	57.6	55.0	53.0	42.8	60.0	57.0	46.4	64.0	60.0	48.6	73.0	65.0	53.6	84.0	76.0	60.2	107.0	88.5	70.5	49.0	48.0	38.7
24.0	19.5	92.0	93.0	68.8	71.5	68.0	51.6	76.5	72.0	55.9	82.0	76.0	58.5	90.5	82.0	64.2	106.5	96.0	72.1	138.0	112.5	84.3	63.0	61.0	46.6
27.0	22.0	100.5	102.0	77.1	78.0	73.5	57.9	84.0	78.0	62.9	90.0	82.5	65.7	99.0	90.0	72.0	117.0	105.0	81.0	151.5	123.0	94.8	69.0	67.5	52.4
30.0	24.4	108.0	109.5	85.5	81.0	78.0	63.5	88.5	84.0	69.0	94.5	88.5	72.0	108.0	96.0	79.5	124.5	112.5	89.4	159.0	130.5	104.4	72.0	70.5	57.6
36.0	29.0	—	136.0	102.8	—	98.0	77.2	—	104.0	83.8	—	110.0	87.6	—	120.0	96.0	—	140.0	108.8	—	164.0	126.4	—	90.0	69.8

NOTE—ND: normal duty (standard) HD: heavy duty RP: riser pole*

*The riser pole arrester is not included in IEEE Std C62.11-1987 and, therefore, is not officially a distribution-class arrester. The riser pole arrester housing and mounting are similar to distribution-class arresters, and riser pole arrester protective characteristics are listed with distribution-class arresters in IEEE Std C62.22-1991.

Not for Resale

Tables 6-5 and 6-6 show the maximum discharge voltages associated with various 8/20 discharge currents for arresters rated 2.7–228 kV. Note that very large increases in discharge current result in relatively small increases in discharge voltage. This exhibits the nonlinear nature of the metal-oxide valve units.

Virtually all discharge currents in effectively shielded industrial installations will be less than 10 kA, the vast majority being only a small fraction of this magnitude.

6.4.5 Arrester classes

Four classes of valve-type arresters are recognized by industry standards that specify lightning impulse "classifying" and switching surge "classifying" current requirements for the respective classes (IEEE Std C62.11-1987). In order of decreasing cost and overall protection and durability, these classes are as follows:

a) Station class
b) Intermediate class
c) Distribution class—heavy duty
   Distribution class—normal duty
d) Secondary

Tables 6-5 and 6-6 list protective characteristics of the metal-oxide arresters. It should be noted that the values listed in tables 6-5 and 6-6 are representative of several manufacturers. The nature of the zinc-oxide-based material used in the valve elements of this design is such that the protective characteristics among the four classes are relatively uniform. There are, however, distinct differences in design features, sizes, etc., among the high-voltage classes that enhance particularly the repetitive duty-cycle capability of the station class relative to the intermediate class, and the intermediate class relative to the distribution class.

6.4.6 Arrester discharge-current withstand capability

To further ensure that arresters have an acceptable capability to discharge lightning currents and line and cable charged capacitance, an array of discharge-current withstand tests are specified by standards. Two of the tests relate to high-current, short-duration and to low-current, long-duration duties. The high-current, short-duration test consists of two discharges of a surge current (65 kA crest for station, intermediate, and distribution normal duty class arresters, 100 kA crest for distribution heavy-duty class arresters, and 10 kA for secondary arresters) having a (4–6)/(10–15) μs wave shape. These low-current, long-duration tests require station and intermediate class arresters to display capability to discharge charged capacitance equivalent to specified transmission line lengths (150–200 mi for station class, depending upon arrester rating, and 100 mi for intermediate class). Distribution arresters must exhibit (in a specified series of discharges) the capability of withstanding an approximate rectangular wave shape of 75 A minimum surge current with a minimum time duration of 2000 μs for normal duty, and 250 A, 2000 μs for heavy duty. Some arresters have discharge capabilities well in excess of these indicated minimums. Where high discharge currents are of concern, consult arrester manufacturer data to determine adequacy of arrester discharge capability.

Copyright The Institute of Electrical and Electronics Engineers, Inc.
Provided by IHS under license with IEEE
No reproduction or networking permitted without license from IHS
Not for Resale

The energy absorption capability of surge arresters upon current discharge is limited, for a single event, by the thermal shock the valve element discs can sustain without puncturing or cracking. In general, the metal-oxide arrester sudden absorption capability is one to two orders of magnitude greater than the stored energy in the line used to perform the standard transmission line discharge test at these voltages (3–230 kV). After an interval of approximately one minute to permit equalization of temperature throughout the discs, an additional approximately equal amount of energy absorption is permissible up to the transient thermal stability limit. This total (thermal stability) limit of energy absorption capability is approximately three times the energy absorbed in the standard (20 operations) duty-cycle test and is well above the capability of silicon-carbide arresters—an important consideration for severe-duty applications, such as for installation near a large, switched capacitor bank.

6.5 Arrester selection

For a given application, the selection of an appropriate arrester involves consideration of MCOV, protective characteristics (lightning and switching impulse), durability (temporary overvoltage and switching surge), service conditions, and pressure-relief requirements. Durability and protective level primarily determine the class of arrester selected: station, intermediate, or distribution.

Station arresters are designed for heavy-duty applications. They have the widest range of ratings, the lowest protective characteristics, and the highest durability.

Intermediate arresters are designed for moderate duty and system voltages of 169 kV and below.

Distribution arresters are used to protect lower voltage transformers and lines where the system-imposed duty is minimal and there is a need for an economical design.

6.5.1 Maximum continuous operating voltage (MCOV)

For each arrester location, arrester maximum fundamental-frequency operating voltage must equal or exceed the expected MCOV imposed by the system. Proper application requires that the system configuration (single-phase, delta, or wye), system grounding, and the arrester connection (phase-to-ground, phase-to-phase, or phase-to-neutral) be evaluated. In rare cases, arresters in industrial systems are connected phase-to-ground and, therefore, are exposed to system phase-ground voltages on a steady-state basis. On the other hand, an arrester connected to an ungrounded or resistance-grounded system will be exposed to phase-to-phase voltage during intervals when the system is operated with a fault-to-ground on one phase. A large majority of industrial medium-voltage systems are resistance-grounded.

6.5.2 Temporary overvoltage (TOV) durability

An arrester must be capable of withstanding the maximum anticipated TOV duty. TOV requirements must take into account both magnitudes and durations of temporary overvolt-

Copyright The Institute of Electrical and Electronics Engineers, Inc.
Provided by IHS under license with IEEE
No reproduction or networking permitted without license from IHS Not for Resale

ages, the combinations of which must be equal to or less than the capability of the arrester as shown by the TOV capability curves published by the manufacturers.

There are several sources of TOV and operating conditions that can affect arrester operation, such as the following:

a) Line-to-ground fault, particularly on an ungrounded or resistance-grounded system
b) Loss of neutral ground on a normally grounded system
c) Sudden loss of load or generator overspeed, or both
d) Resonance effects and induction from parallel circuits

The most common source of TOV and the most common basis of TOV determination is the voltage rise on unfaulted phases during a line-to-ground fault. Line-to-ground faults tend to shift the system fundamental frequency phasor pattern from its normal position of symmetry with respect to ground. In the case of ungrounded systems, this shift is virtually complete; that is, the unfaulted (sound) phase arrester(s) will be subjected to 100% of the line-to-line operating voltage. However, a solidly grounded system (depending upon degree) provides considerable restraint in voltage pattern shift and usually permits a considerable reduction in arrester rating requirement.

IEEE Std C62.22-1991 defines *coefficient of grounding* as "The ratio E_{LG}/E_{LL}, expressed as a percentage, of the highest root-mean-square line-to-ground power-frequency voltage E_{LG} on a solid phase, at a selected location, during a fault to ground affecting one or more phases to the line-to-line power-frequency voltage E_{LL} which would be obtained, at the selected location, with the fault removed." Appendix B of IEEE Std C62.22-1991 provides a guide to facilitate the calculation and determination of coefficients of grounding. As in this standard, such aids are often presented in terms of symmetrical component parameters, and surge arrester rating selection practices have evolved to a certain extent around symmetrical component resistance and reactance terminology (R_0/X_1, X_0/X_1 ratios). Further, systems have been categorized as follows to aid in arrester rating selection:

a) Effectively grounded—coefficient of grounding not exceeding 80% (X_0/X_1 is positive and less than three, and R_0/X_1 is positive and less than one)
b) Non-effectively grounded or ungrounded when coefficient of grounding exceeds 80%

The vast majority of medium-voltage (2.4–13.8 kV) industrial power systems employ some form of resistance grounding. For arrester application purposes, these are non-effectively grounded systems having coefficients of grounding of 100%. The same is true for the infrequently used ungrounded systems.

Some industrial complexes are served by medium-voltage systems that utilize solid system grounding only at the point of energy supply to the system. These systems exhibit a range of coefficients of grounding (usually less than 80%), depending upon the system or location in the system. Therefore, these systems require individual study to ensure the most economical, secure, arrester rating selection.

Copyright The Institute of Electrical and Electronics Engineers, Inc.
Provided by IHS under license with IEEE
No reproduction or networking permitted without license from IHS
Not for Resale

Many high-voltage transmission systems may exhibit coefficients of grounding as low as 70%, and certain multigrounded four-wire distribution systems may be even slightly less.

The coefficient of grounding as a measure of the system grounding effectiveness is very important when applying arresters. On effectively grounded systems, for example, an arrester may be momentarily subjected to a TOV voltage of up to 120–140% of normal line-to-ground voltage during a ground fault involving another system phase. The most likely situation where this might occur would be for a lightning-produced overvoltage that caused a flashover (line-to-ground fault) on one phase of the system and a voltage surge of sufficient magnitude to simultaneously cause arrester protective action on the unfaulted phases. On non-effectively grounded systems, the TOV applied to the arrester is not only greater in magnitude, approaching line-to-line voltage as a limit, but is sometimes applied for substantially longer periods of time as in high-resistance grounding applications.

6.5.3 Switching surge durability

Surge arresters dissipate switching surges by absorbing thermal energy. The amount of energy is related to the prospective switching magnitude, its wave shape, the system impedance, circuit topology, the arrester voltage-current characteristics, and the number of operations (single or multiple events). The selected arrester should have an energy capability greater than the energy associated with the expected switching surges on the system (IEEE Std C62.22-1991).

Stored energy in transmission lines, long cable circuits, and large capacitors are the principal sources of switching surge energy that impacts arresters. Rarely in industrial systems is such energy sufficient to jeopardize arresters. Transmission lines of 50–100 mi or more at 115 kV and above are necessary to represent a potential jeopardy to arresters. Many industrial plants have extensive cable installations, but the associated voltage is such that the associated stored energy is relatively limited. Similarly, the capacitor banks installed within industrial complexes very often have limited capacity. Where extensive cable installations and/or very large capacitor banks are planned, particularly at 34.5 kV and above, it would be prudent to ensure that the arrester switching surge capability is not exceeded. Arrester manufacturers' application data and IEEE Std C62.22-1991 may be consulted for guidance. The best determination of arrester duty is made via analog or digital modeling, where system and arrester details can be represented accurately. Refer to [B17], pages 282 and 284.

6.5.4 Selection of arrester voltage rating

The arrester voltage rating should be tentatively selected on the basis of MCOV, TOV, and switching surge durability. Special attention should be given to the abnormal system operating voltages as given under 6.5.2.

6.6 Selection of arrester class

The arrester class should be selected on the basis of required level of equipment protection (protective levels summarized in tables 6-5 and 6-6), and the following:

Copyright The Institute of Electrical and Electronics Engineers, Inc.
Provided by IHS under license with IEEE
No reproduction or networking permitted without license from IHS Not for Resale

a) Available voltage ratings (see tables 6-5 and 6-6)
b) Pressure-relief current limits, which should not be exceeded by the system's available short-circuit current and duration at the arrester location
c) Durability characteristics (see tables 6-5 and 6-6) that are adequate for systems requirements

Arrester failures may entail very low arrester impedance. As such, arrester failure on one phase will result directly in arrester current that approaches system phase-to-ground fault current magnitude. In ungrounded and resistance-grounded systems (as in most industrial medium-voltage systems) ground fault currents are very limited and range from a few amperes to perhaps as high as 2000 A. In solidly grounded systems the ground-fault current may approach or even slightly exceed the three-phase fault current magnitude. A failed arrester may be required to carry phase-to-phase fault current (0.87 times three-phase fault current) when it participates in a double phase-to-ground fault, regardless of system grounding. Such currents may produce explosive pressure build-up due to the associated rapid heating effects and gas generation inside the arrester. IEEE Std C62.11-1987 requires that pressure-relief devices be incorporated in all station and intermediate arrester designs to ensure safe containment of otherwise possible dangerous arrester disintegration during the passage of system high short-circuit current through them. This standard requires pressure relief for standard (metal-top) designs up to system short-circuit currents as follows:

Duty cycle voltage/class	Symmetrical rms A	Duration (seconds)
3–72 kV station arresters	40 000–65 000	0.2
Above 72 kV station arresters	40 000–65 000	0.1
All voltages intermediate	16 100	0.2

Many arrester manufacturers offer capabilities in excess of the above for station-class and intermediate-class arresters. Note that short-circuit duties in many industrial systems may exceed the 16 100 rms A symmetrical required by the standard for intermediate arresters. Also, pressure-relief capability for the popular porcelain-top arrester designs has not been standardized, but some manufacturers offer polymer designs with pressure-relief capability equal to station- and intermediate-class surge arresters, which also have the enclosure space-saving feature as porcelain-top designs.

Pressure-relief capabilities are not standardized for distribution arresters, but IEEE Std C62.22-1991 does require that all distribution class arresters for which a fault-current withstand rating is claimed shall be tested in accordance with procedures (set forth therein) similar to those for station and intermediate arresters.

The class of arrester selected may be influenced by the importance of the station or equipment to be protected. For example, station-class arresters should be used in large substations. Intermediate-class arresters may be used in smaller substations and on sub-transmission lines and cable terminal poles at 161 kV and below. Distribution-class arresters might be used in small distribution substations to protect distribution voltage buses.

In the distribution class there are three basic arrester categories recognized by the metal-oxide arrester application standard, IEEE Std C62.22-1991: normal duty, heavy duty, and

Copyright The Institute of Electrical and Electronics Engineers, Inc.
Provided by IHS under license with IEEE
No reproduction or networking permitted without license from IHS
Not for Resale

riser pole. The riser pole arrester, as its name implies, originally was designed for application at overhead line-cable junctions for the protection of underground cables and equipment and pad-mounted transformers. As such, these designs must have the lowest practical protective levels. Some manufacturers' riser pole designs have protective characteristics comparable to station class. Where suitable ratings are available, riser pole arresters are good candidates for rotating machine protection. So-called "elbow" distribution class arresters are available that facilitate protection at cable-to-equipment junctions.

There is relatively little difference in the protective levels of the normal-duty and heavy-duty arresters at typical industrial plant discharge voltages. The heavy-duty arrester has substantially higher discharge current capability (high current, short duration; low current, long duration; and duty cycle classifying current) than the normal-duty arrester. The heavy-duty arrester is applicable in exposed severe lightning area distribution circuits.

6.6.1 Arrester location

A major factor in locating arresters within a station or substation is the line and equipment shielding. It is usually feasible to provide shielding for the substation even if the associated lines are unshielded. Station shielding reduces the probability of high voltages and steep fronts within the station resulting from high-current lightning strokes. However, it should be recognized that the majority of strokes will be to the lines, creating surges that travel along the line and into the station. If the lines are shielded, the surges entering the station are less severe than those from unshielded lines. Consequently, the magnitude of the protective arrester currents is lower, resulting in better protective levels (IEEE Std. C62.22-1991).

6.6.2 Separation effects

The voltage at the protected insulation will usually be higher than at the arrester terminals due to the *Ldi/dt* of the connecting leads. This rise in voltage is called the *separation effect* (SE).

Separation effects increase with the increasing rate of rise of the incoming surge and with increasing distances between the arrester and protected equipment. For evaluation of separation effects due to lightning surges, refer to IEEE Std C62.22-1991, Appendix C. Due to the relatively slow rates of rise of switching surges, separation effects need not be considered in applying the fundamental protective ratio formula to switching surge withstand (*basic surge level* [BSL]) (IEEE Std C62.22-1991).

6.7 Application concepts

6.7.1 General considerations

Lightning is considered to be the most severe source of surge voltages and, for that reason, lightning protection is the main subject of the following discussion. It is to be understood, however, that many of the protection principles involved, particularly regarding wave magni-

--`,,`,,`-`-`,,`,,`,`,,`---

Copyright The Institute of Electrical and Electronics Engineers, Inc.
Provided by IHS under license with IEEE
No reproduction or networking permitted without license from IHS Not for Resale

tude and wave-shape control, apply to situations involving surges of non-lightning origin as well.

In actual practice, lightning protection is achieved by the processes of *interception* of lightning-produced surges, *diverting* them to ground, and by *altering* their associated wave shapes [B50]. Interception relates primarily to the prevention of direct strokes to lines and apparatus by shielding, which also functions as an energy diversion path to ground. However, an extremely low percentage of strokes may penetrate overhead line static wire shielding in addition to induced surges that will occur on the line in presence of lightning in the area. Also, of course, some lines are not shielded. Therefore, lightning-produced surges do become impressed on power system components due to imperfect or nonexistent shielding. Strategically located arresters are applied to divert most of this surge energy around sensitive apparatus insulation and thus afford the necessary protection. In the most ideal and simplest applications, the surge arresters are connected in the closest practical shunt relationships with the insulation of the apparatus to be protected. Surge capacitors may be applied to alter the shape of a steep incoming wavefront. The rate of rise of the surge voltage at the capacitor terminals is limited by the charging rate of the capacitor.

While most apparatus in the large majority of applications will tolerate the surge duties permitted by good shielding and proper arrester application, the associated gradients in particular may be damaging to rotating machines of multi-turn coil construction. This includes virtually all motors and also generators up to approximately 35–40 MW at 13.8 kV. A discussion of motor protection in 6.7.3.9.2 covers this aspect of surge protection and associated application of surge capacitors.

Internally generated surge sources should be recognized, as well as lightning surges, in order that the system is properly protected against all sources of hazardous overvoltage. These transient overvoltages can be produced by current-limiting fuse operation, vacuum and high-speed circuit breaker operations, thyristor switching, and ferroresonance. A more detailed description of these phenomena was given in 6.1.

6.7.2 Insulation coordination

Insulation coordination is defined in ANSI C92.1-1982 as “the process of correlating the insulation strengths of electrical equipment with expected overvoltages and with the characteristics of surge-protective devices.” Fundamentally, insulation coordination involves checking to determine that an adequate margin of protection exists between the insulation withstand characteristic of the electrical apparatus and the protective characteristic of the applied surge arrester for any voltage impulse likely to be encountered. This is often demonstrated graphically, as shown in figure 6-16, where the test-implied transformer insulation withstand curve is an attempt to simulate the actual withstand curve. It should be recognized that the technique of simulating the actual withstand curve from the results of the four (at most) generally available insulation tests discussed in 6.3.2 and graphically shown in figure 6-16 is at best an approximation since different wave shapes are employed. Using such a curve on the same graph with a surge-arrester-protective characteristic curve that is based on tests performed using still other wave shapes is, therefore, not a truly accurate representation. For this reason, the calculation of three standardized protective margins that may be com-

Copyright The Institute of Electrical and Electronics Engineers, Inc.
Provided by IHS under license with IEEE
No reproduction or networking permitted without license from IHS
Not for Resale

pared to recommended minimums is preferred over graphical techniques for insulation coordination.

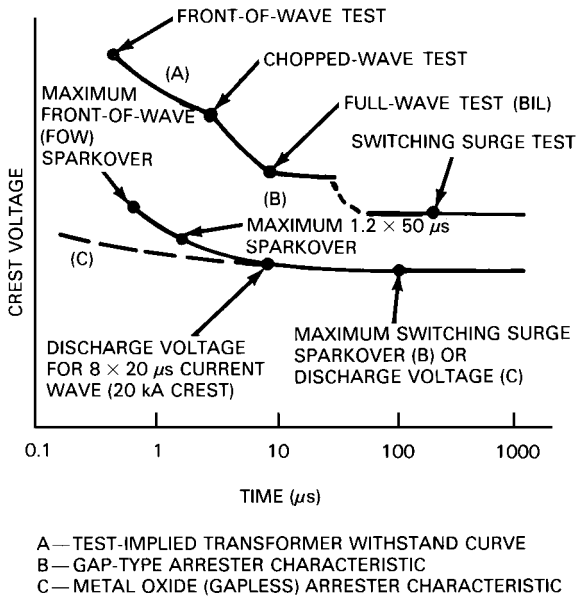

Figure 6-16—Insulation coordination based on test-implied transformer withstand curve

The degree of coordination is measured by the *protective ratio* (PR). The fundamental definition of PR is

PR = insulation withstand level/voltage at protected equipment

Voltage at protected equipment includes separation effect, if significant. If not, it is equal to arrester protective level.

There are three protective ratios in common use that compare protective levels with corresponding insulation withstands:

PR_{L1} = chopped wave withstand/front of wave = CWW/FOW
PR_{L2} = basic lightning impulse level/lightning protective level = BIL/LPL
PR_S = basic surge level/switching protective level = BSL/SPL

The *protective margin* (PM) in percent is defined as

PM = (PR–1)100%

PR and PM applications are covered in detail in IEEE Std C62.22-1991.

Copyright The Institute of Electrical and Electronics Engineers, Inc.
Provided by IHS under license with IEEE
No reproduction or networking permitted without license from IHS Not for Resale

6.7.3 Component protection

6.7.3.1 Outdoor substations

While actual lightning protective practices may necessarily vary from one type of installation to the next, the most basic categorical division relates to whether the installation is effectively shielded or non-effectively shielded. It is common practice to provide a safety factor of protective margin between established impulse capability of apparatus insulation and the protective level provided by arresters. The generally recommended minimum protective margin, defined in 6.7.2, that is generally recommended is 20% for impulse coordination (front-of-wave, full wave) and 15% for switching surge coordination.

It is very important that the lowest practical ground resistance be obtained and that the connections between arrester ground and terminal, and the protected equipment, be as short as possible. Additionally, ground interconnections between these two points are often employed to place an arrester in closest practical shunt with insulation to be protected.

6.7.3.1.1 Effectively shielded substations

Direct lightning strokes to equipment located in substations can cause a considerable amount of damage. This equipment should be protected from direct strokes. Such protection has been accomplished by intercepting lightning strokes and diverting them to ground using shield wires and/or masts.

Two basic approaches have historically been used to design the direct stroke shielding of substations and switchyards:

a) The empirical method
b) The electrogeometric model

The empirical method involves either the use of fixed angles or the use of empirical curves. The fixed-angle design method uses the vertical angles between shield wires or masts and the equipment to be protected to determine the number, position, and height of the shield wire and masts [B28]. The angles used are determined by the degree of lightning exposure, the importance of the substation being protected, and the physical area occupied by the substation. For substations below 345 kV, an angle of 45° or less has been used between shield wire or mast and the equipment to be protected. Empirical curves have been developed from field studies of lightning and laboratory model tests. These curves can be used to determine the number, position, and height of shield wires and masts. The curves were derived for different configurations of shield wires and masts and for different estimated shielding failure rates [B28], [B48].

The electrogeometric model is a geometrical representation of a facility which, together with suitable analytical expressions, is capable of predicting if a lightning stroke will terminate on the shielding system, the earth, or the protected element of the facility. One of the methods based on the electrogeometric model is known as the rolling sphere technique. The rolling sphere technique [B51] involves rolling an imaginary sphere over the surface of the earth up

Copyright The Institute of Electrical and Electronics Engineers, Inc.
Provided by IHS under license with IEEE
No reproduction or networking permitted without license from IHS
Not for Resale

to the substation. The sphere rolls up and over all earth potential structures, lightning masts, and shield wires. A piece of equipment is protected from direct strokes if it remains outside the curved surface of the sphere because it is being elevated by shield wire or masts. The radius of the sphere and the stroke attractive distance are determined by the assumed stroke current in the equation of the electrogeometric model. Several approaches [B32], [B34], [B35], [B41] to shielding switchyard from direct strokes have been based on the rolling sphere technique and the geometric model. A comprehensive guide to these methods of designing direct stroke shielding of substations is being developed by the IEEE Substation committee [B52].

With two or more masts, the protective zone of each is increased somewhat in the area between them. This may be considered as an increase in the angle (made with the vertical) of the side of each protective cone that lies between two masts. With the usual spacings between masts, this angle may increase to 60 degrees. It is recommended that all overhead lines entering the substation be protected by a grounded shield conductor(s) for a distance of at least one-half mile (800 m) from the substation. These shielding conductors should be grounded at each pole through as low a ground resistance as it is practicable to obtain, and they should be connected to the ground grid at the substation. Low ground resistance is particularly important for the ground connection at the first few poles adjacent to the substation.

A set of arresters is normally installed at the transformer terminals, since this is the most expensive piece of equipment to protect. Additional arresters may be needed to protect incoming line switches if they are expected to be in the open position for an extended period of time. If not, the arresters installed at the transformer may, depending on the linear distance between transformer and switches, protect all equipment inside the station. Assessment of such need may be made with the assistance of aids such as Appendix C of IEEE Std C62.22-1991. It will be found that usually rather significant separation distances can be tolerated (say 75–200 ft [23–61 m]—sometimes more) for station equipment 23 kV and above with full BIL insulation. For equipment in the 15 kV class and below, actual practice usually has been to avoid any appreciable separation distance. Low BIL dry-type transformers and rotating machines require special attention, even in shielded environments.

Finally, a set of arresters adequately rated for the service is recommended for installation at the remote end of the shielded section of the overhead line conductors. These arresters will intercept the severe surges and dissipate a large portion of their transient energy to ground. Only the attenuated voltage surge (perhaps one half or less of the original value) continues along the shielded one-half mile line section to the station. The lessened duty on the station surge-protective devices results in a corresponding reduction in the surge-voltage magnitude arriving at the terminals of vulnerable apparatus.

6.7.3.1.2 Non-effectively shielded substations

These may be defined as those substations that do not have the overhead shielding described in the previous paragraphs. Such substations are likely to be small, medium-voltage (up to and including 34.5 kV primary) installations entailing relatively simple circuit arrangements—often only one incoming exposed line or one secondary exposed circuit, or both. In such cases, incoming line arresters may suffice to protect the transformer if a minimum of

Copyright The Institute of Electrical and Electronics Engineers, Inc.
Provided by IHS under license with IEEE
No reproduction or networking permitted without license from IHS Not for Resale

circuit length, as defined in IEEE Std C62.22-1991, is devoted to associated overcurrent protection and switching equipment (breaker or fused switch, for example). Otherwise, arresters should be applied at the terminals of all transformers.

When a number of circuits are involved, the lightning-produced surge duties are divided among them in inverse proportion to their surge impedances and, in general, the hazard is reduced. Therefore, protective coordination should be established on the basis of the minimum number of circuits in service. Also, it is important to ensure that sensitive apparatus is not left isolated (from its surge protection) as a result of sectionalizing to accommodate an unusual operating condition.

Since non-effectively shielded applications entail a much higher surge exposure, the probability may be such that arresters may be subjected to large lightning stroke currents and rates of rise in areas of high lightning ground flash density. In these cases, the protective device coordination should be based on a minimum of 20 000 A.

6.7.3.2 Metal-clad switchgear

In most installations, surge-arrester protection is not required at the metal-clad switchgear. Often metal-clad switchgear has a limited exposure, that of a length of cable intervening between the metal-clad and exposed line. Where the cable is of continuous metallic sheath, figure 6-17 illustrates this case and provides a guide as to the possible need for an arrester at the metal-clad switchgear. Note that an arrester is required at the line cable junction in any case to protect the cable.

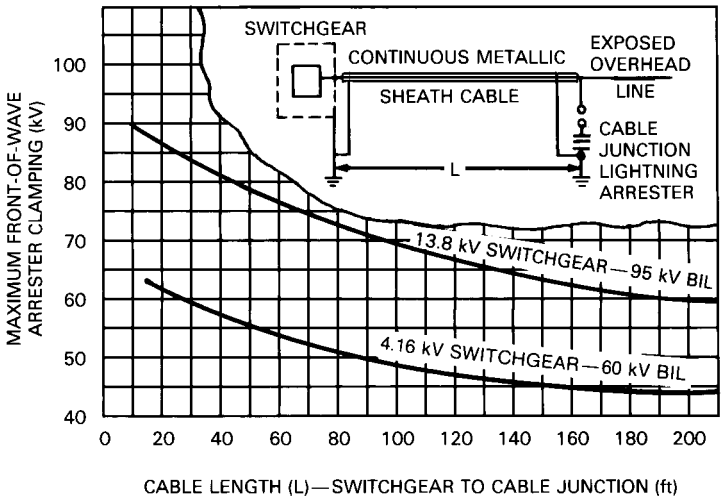

Figure 6-17—Curves showing maximum permissible length of cable for which arresters are not required in metal-clad switchgear versus line-cable junction arrester clamping voltage

Copyright The Institute of Electrical and Electronics Engineers, Inc.
Provided by IHS under license with IEEE
No reproduction or networking permitted without license from IHS
Not for Resale

Nonmetallic-sheathed cables have higher surge impedances than metallic-sheathed cables and their use may necessitate the use of arresters at the switchgear (distribution class will suffice). However, the installation of a neutral or ground wire in the duct with each three-phase nonmetallic-sheathed cable provides very nearly the same surge impedance as continuous metallic-sheathed cable and may be so considered for surge-protective purposes.

In many industrial installations the only exposure of the metal-clad switchgear to lightning may be through a power transformer. When the power transformer has adequate lightning protection on the exposed side opposite the switchgear, there is generally no necessity to provide arresters on the sheltered side of the transformer connected to the switchgear. Experience has shown that for the transformer sizes normally encountered in unit substations there is usually not enough surge transfer through the transformer to be harmful to the metal-clad switchgear.

6.7.3.3 Dry-type transformers

Standard dry-type transformers present relatively difficult lightning-protective problems due to their usual low BILs compared to liquid-immersed transformers. When surge exposure is by direct-connected overhead lines, arresters are required in direct shunt with the standard dry-type transformer. Regarding applications of surge exposure through cable, figure 6-18 applies for standard dry-type transformers in the identical fashion that figure 6-17 applies for metal-clad switchgear. With arresters comparable to those listed in tables 6-5 and 6-6, it will be found that in many practical applications, even in this relatively shielded environment, the line-cable junction arrester will not protect standard dry-type transformers against lightning-produced traveling waves. Where an arrester is required at the transformer, a distribution-class metal-oxide arrester or a riser pole arrester with a low equivalent front-of-wave voltage rating may suffice provided its fault current withstand capability (i.e., pressure-relief rating) is sufficient.

A somewhat less severe, although typical, surge exposure for dry-type transformers is through another (supply) transformer (see figure 6-19). Any surges impinging on the primary side of the supply transformer will be mollified somewhat as they are transferred through the transformer to appear on its (the supply transformer's) secondary. For the most used wye-delta- and delta-wye-connected supply transformers, arresters are generally not required at the dry-type transformer.

However, standard BIL dry-type transformers should be protected by arresters at or near their terminals in applications where they can be subjected to surges due to current-limiting fuse-blowing and/or other chopping effects of switching devices. Surge-protective capacitors are also applied in rare situations to correct problem applications involving prior transformer failures and to enhance the protection of essential service applications, particularly where cable length is inadequate to achieve transient voltage rate-of-rise control.

Dry-type transformers are available from several manufacturers with the same BIL as liquid-immersed transformers. A choice may be considered of specifying the same BIL for dry-type as for liquid-immersed types, as they both are subject to the same environment as far as

Copyright The Institute of Electrical and Electronics Engineers, Inc.
Provided by IHS under license with IEEE
No reproduction or networking permitted without license from IHS Not for Resale

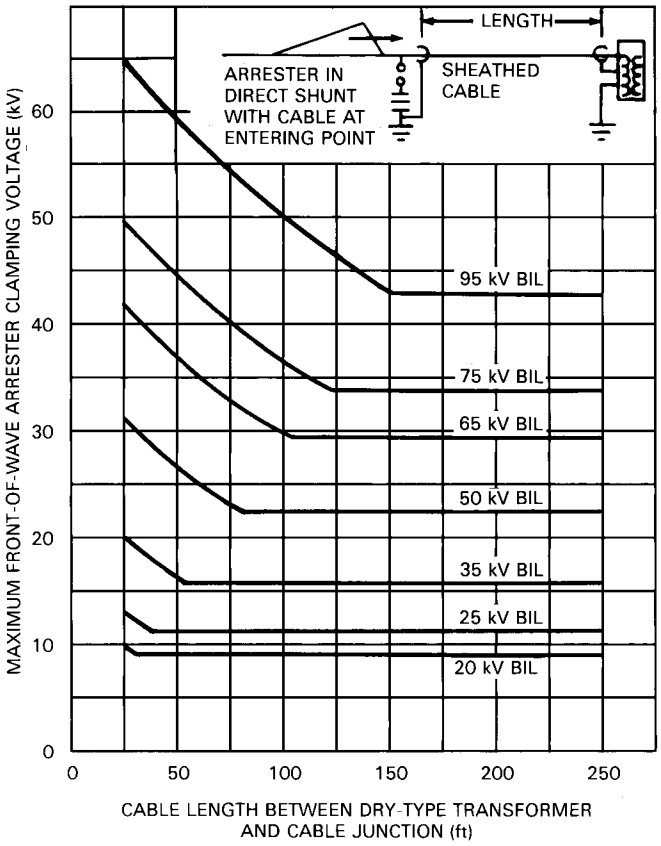

Note: Interpolate or extrapolate for BIL's not shown.

Figure 6-18—Curves for determining maximum permissible length of cable for which arresters are not required at standard dry-type transformer versus line-cable junction arrester clamping voltage

impulses and transients are concerned, instead of providing the power system with additional surge protection.

6.7.3.4 Overhead line protection (4–69 kV)

Historically, relatively little consideration has been given to the surge protection of open-wire overhead distribution line insulation. This often results in line insulator flashover which must be cleared by a fault-current-protective device, which in turn results in a momentary or extended circuit interruption. Both the high gradient associated with insulator flashover and service interruption are associated disadvantages of considerable significance to the more sensitive plants, particularly all electronically automated industrial plants.

Analytical and test-model studies relating to overhead transmission and distribution circuits [B24] have disclosed a so-called predischarge current effect in association with strokes to

Copyright The Institute of Electrical and Electronics Engineers, Inc.
Provided by IHS under license with IEEE
No reproduction or networking permitted without license from IHS
Not for Resale

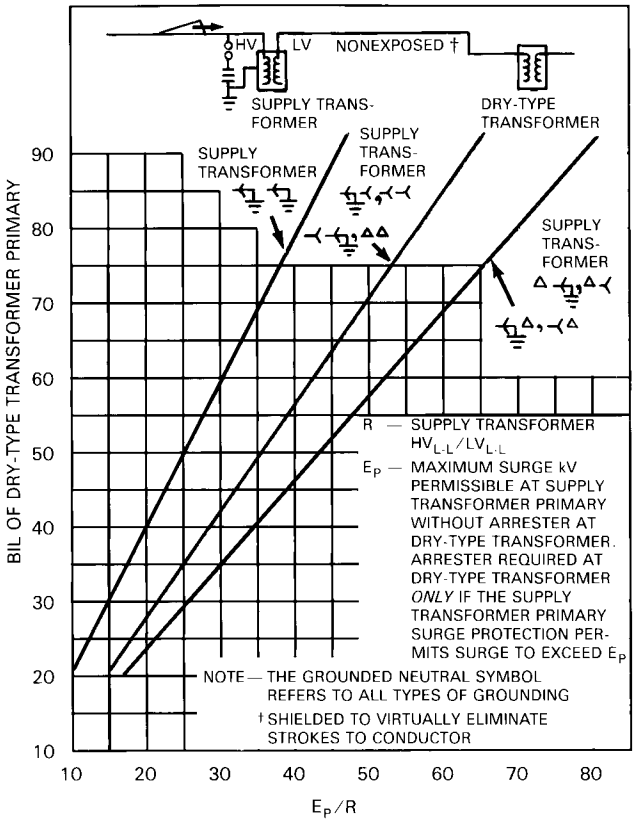

Figure 6-19—Curves showing maximum surge permissible at supply transformer without requiring arrester at standard dry-type transformer

lines, which in effect tends to suppress surge overvoltages at midspan and concentrate them at grounded poles. At grounded poles there is opportunity to install surge arresters on all phases so that voltage stresses are relieved by the arrester-protective characteristics and thus prevent flashover of line insulators. Actual utility company experience show that arresters protecting each phase, at economically spaced intervals along the line, will often give improved protection and reduce the number of direct, as well as induced lightning stroke flashovers. This new approach to line protection is also much less sensitive to footing resistance.

This should certainly be a consideration toward improving protection on overhead circuits that serve sensitive industrial plants.

6.7.3.5 Aerial cable

Aerial cable is almost universally protected against direct lightning strokes by grounding the messenger and sheath at every pole through a low value of ground resistance. This is to allow

--`,,`,,`-`-`,,`,,`,`,,`---

Copyright The Institute of Electrical and Electronics Engineers, Inc.
Provided by IHS under license with IEEE
No reproduction or networking permitted without license from IHS
Not for Resale

a lightning stroke to the messenger to drain off by current flow to earth without causing the voltage of the messenger and sheath to rise excessively above the voltage of the cable conductors. If an aerial cable joins an open-wire line, surge arresters should be installed at the junction to protect the cable insulation against lightning surges that arrive over the open line. The ground terminals of these arresters should be connected directly to the cable messenger and sheath as well as to ground. Since the voltage and current surges produced in the messenger of aerial cable by lightning stroke to the messenger result in voltage and current surges in the cable conductors, it is generally recommended that aerial cable be considered the same as open-wire lines as far as the protection of terminal equipment is concerned.

6.7.3.6 Overvoltage protection of shunt capacitor banks

Overvoltage protection should be considered whenever shunt capacitor banks are installed. The possibility of overvoltages from lightning, switching surges, and temporary overvoltages requires a detailed evaluation to determine the duty on arresters applied in the vicinity of a shunt capacitor bank. Due to the low surge impedance of large high-voltage shunt capacitor banks, it may not be necessary to add arrester protection against lightning beyond that which already exists in the substation. However, additional protection may be needed to protect equipment from overvoltages due to capacitor switching or the switching of lines or transformers in the presence of capacitors (IEEE Std C62.22-1991).

6.7.3.7 Overvoltage protection of high-voltage underground cables

In addition to the overvoltage protection at the junction between overhead lines and cables, cables may require further consideration because of traveling wave phenomena and the effects of distributed line charging capacitances (IEEE Std C62.22-1991).

6.7.3.8 Overvoltage protection of gas-insulated substations (GIS)

Overvoltage protection is required at the junction to overhead and may be required within the GIS bus depending upon the arrangement and the length (IEEE Std C62.22-1991).

6.7.3.9 Rotating machine protection

Incoming surges can be transferred through transformers by electrostatic and electromagnetic coupling. Therefore, surge voltages can be experienced on the transformer secondary as well as the generator terminals as a result of surge-voltage impulse on the transformer primary terminals. This can occur even though the transformer is protected with arresters at the primary terminals.

When high-voltage surges are internally generated, the standard protective circuit for rotating machines consists of arrester and capacitor located near the machine terminals. The function of the arrester is to limit the magnitude of the voltage to ground, while the capacitor lengthens the time to crest and rate of rise of voltage at the machine terminals.

The basic winding design patterns of motors and generators involve rather large capacitance coupling between the conductor of the winding of each coil and the grounded core iron that

Copyright The Institute of Electrical and Electronics Engineers, Inc.
Provided by IHS under license with IEEE
No reproduction or networking permitted without license from IHS
Not for Resale

surrounds it. A fast rising surge voltage at the motor terminal lifts the potential of the terminal turn, but the turns deeper in the winding are constrained (by this relatively large capacitance from coil to ground) and delayed in their response to the arriving voltage wave. The result is a greatly accentuated voltage gradient across the end-turns of the terminal coil that appears as severe voltage stress on the turn-to-turn insulation of the terminal coil. Although the major or *ground wall* insulation between conductors and ground is fairly thick, the turn insulation within the coils is thin. Economical design dictates a thickness of no more than 0.005–0.040 in, depending upon machine voltage rating. It is the protection of the turn insulation that becomes critical in avoiding failure in multi-turn stator windings of ac motors and generators.

6.7.3.9.1 Machine winding impulse strength

It has already been observed that there are no established impulse standards on the insulation structures for ac rotating machines. The machine impulse withstand envelope of figure 6-13 represents the most widely used curve for industrial applications of ac rotating machines. This capability envelope, based on windings of form-wound coils with multi-turn construction, defines the expected winding impulse capability to be limited to surges whose fronts and amplitudes lie below the indicated boundary (envelope). If a machine may be subjected to impulse voltages of greater magnitude, it should be protected with arresters (to limit surge-voltage magnitude) and surge-protective capacitors (to increase wave-front time) that will ensure that the capability envelope is not exceeded by the impinging surge duty.

Impulse waves of lower magnitude, but having rise time less than 5 μs, will primarily endanger the turn insulation because of the nonuniform voltage distribution. Not only does 70–100% of the impulse magnitude appear across the first coil connected to the incoming line, but within that coil itself the voltage distribution is nonlinear, resulting in as much as half the total coil impulse voltage appearing between the first two adjacent turns ([B8], [B25], [B44]). By connecting a wave-sloping capacitor between each line terminal and ground affords protection against this condition [B16].

The conventional method for wave-front, rate-of-rise protection of motors is shown in figure 6-20. A capacitor is installed line to ground on each motor phase conductor. The rate of rise of the surge voltage across the motor winding terminals is limited by the charging rate of the capacitor. Special protective capacitor units are designed for this purpose with low internal inductance (table 6-7) that control the rate of rise of incident overvoltages to protect the turn-to-turn insulation. Surge arresters then complete the rotating machine insulation protection to ground by limiting the magnitude of the incident voltage wave.

6.7.3.9.2 Rotating machine surge protection practice

Much documentation exists relating to the surge protection of rotating machines. An ideally protected installation requires the following:

a) A strictly effectively shielded environment
b) Arresters at terminals of machine
c) Surge capacitors at terminals of machine
d) Strict adherence to good grounding practices

Copyright The Institute of Electrical and Electronics Engineers, Inc.
Provided by IHS under license with IEEE
No reproduction or networking permitted without license from IHS Not for Resale

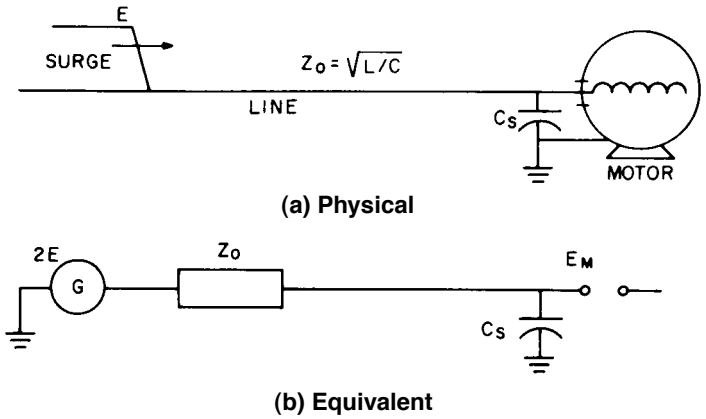

Figure 6-20—Application of shunt-connected surge-protective capacitors for wave-front control

Table 6-7—Capacitance of surge-protective capacitors per line terminal connected line to ground

	Rated motor voltage		
	650 V and less	**2400–6900 V**	**11 500 V and higher**
Capacitance, μF	1.0	0.5	0.25

Effective shielding requirements for stations have been defined previously in 6.7.3.1.1. In the case of rotating machines having overhead line exposure, either direct or through intervening equipment (such as reactors, transformers, or cables), arresters are also applied out on the exposed lines a distance of at least 1000–2000 ft to further reduce surge magnitude duties on the more immediate surge-protection equipment.

The following example shows how the shunt-connected surge capacitor lessens the slope of the voltage surge front and limits the crest voltage magnitude:

Figure 6-21 illustrates a voltage surge traveling along a branch cable circuit Z_0 = 50 Ω to a 4160 V motor. At the line terminal, which is connected to the motor terminals, a set of surge protective capacitors (0.5 μF per phase) are installed. By the use of surge arresters, the voltage crest already has been reduced, by a 5.1 kV MCOV arrester, to 16 kV.

The electrical equivalent circuit applicable to the travelling wave diagram of figure 6-21 is shown in figure 6-22. The capacitor is charged by a 32 kV surge voltage through a resistance of 50 Ω. The driving voltage is considered as a rectangular wave of 32 kV acting for a duration of 6 μs.

Copyright The Institute of Electrical and Electronics Engineers, Inc.
Provided by IHS under license with IEEE
No reproduction or networking permitted without license from IHS
Not for Resale

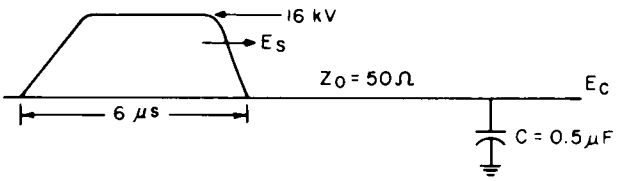

Figure 6-21—Surge voltage wave traveling toward a motor terminal on a 50 Ω surge impedance line

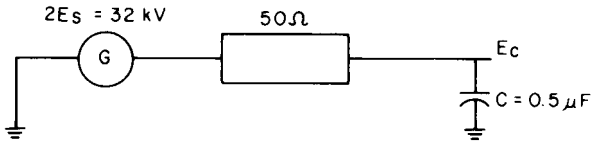

Figure 6-22—Accurate lumped-constant equivalent circuit for analysis

The motor major insulation security will be concerned primarily with the magnitude of the terminal voltage E_C, while the turn insulation security will be concerned primarily with the rate of rise of that voltage, dE_C/dt.

The fundamental current-voltage relationships associated with a capacitor, starting from a de-energized condition, are the following:

$$E_C = \frac{Q}{C} = \frac{\int i\,dt}{C}$$

$$\frac{dE_C}{dt} = \frac{dQ}{dt} = \frac{I}{C}$$

When the capacitor is charged from a step-voltage source through a series resistor, as in figure 6-22, the capacitor voltage builds up in accordance with

$$E_C = 2E_S\,(1 - e^{-t/t'})$$

where t´ = RC, the circuit time constant, and

$$\frac{dE_C}{dt}\ (\text{maximum}) = \frac{I}{C}\ (\text{maximum})$$

Copyright The Institute of Electrical and Electronics Engineers, Inc.
Provided by IHS under license with IEEE
No reproduction or networking permitted without license from IHS Not for Resale

In this specific problem, $2E_S$ = 32 kV, Z_0 = 50 Ω, and $C = 0.5(10)^{-6}$. The RC product is $50\,(0.5)\,(10)^{-6} = 25\,(10)^{-6}$ s.

The maximum input current to the capacitor I occurs at $t = 0$ when the surge voltage first arrives at the capacitor and $E_C = 0$. We then have the following:

$$I = \frac{2E_S}{Z_0} = \frac{32\,000}{50} = 640 \text{ A}$$

$$\frac{dE_C}{dt} \text{ (maximum)} = \frac{I}{C} = \frac{640}{0.5(10)^{-6}}$$

$$= 1280(10)^6 \text{ V/s} = 1280 \text{ V/}\mu s$$

For a surge-voltage duration of $t = 5$ μs, the quantity $e^{-t/t'}$ is equal to

$$e^{-0.2} = 0.8187$$

$$(1 - e^{-0.2}) = 0.1813$$

Thus at the end of the 5 μs interval, the capacitor voltage is

$$E_C = 2E_S\,(0.1813) = 32\,(0.1813) = 5.81 \text{ kV}$$

In comparison with the 13 kV crest value of the motor high-potential test, the voltage level developed across the capacitor (5.81 kV) is well below that level, and also well below the protective level of the special 6 kV (5.1 MCOV) surge arrester. The rate of rise of voltage at the motor terminal (maximum value) meets the criterion of at least 10 μs to reach the crest level of the nameplate voltage.

In conclusion the following should be noted:

a) Had the circuit construction involved spaced conductors or open-wire lines, the surge impedance would have been substantially greater, making the surge current values lower, which in turn would account for lower values of capacitor voltage and lower values of the rate of rise of the capacitor voltage.
b) Had the surge voltage been alternating, each subsequent half-cycle of surge current flow would create cancellation effects in the capacitor voltage created by the previous half-cycle.
c) A greater duration of unidirectional voltage surge would account for a greater voltage across the capacitor, limited by the level $2E_S$ or the arrester protective level, whichever is lower.
d) The presence of series inductance in the capacitor circuit acts to deteriorate the wave-sloping action of the surge capacitor, and even inductances of as little as a few microhenries can greatly impair performance ([B16], Chapter 2).

Copyright The Institute of Electrical and Electronics Engineers, Inc.
Provided by IHS under license with IEEE
No reproduction or networking permitted without license from IHS
Not for Resale

Actual practice indicates a very high percentage of motors above 4000 V are provided with arresters and surge capacitors. Similarly, at least half of the 4000 V motors installations are so equipped, while 2300 V motor installations are so equipped in only a minority of applications.

In 1990, an Electric Power Research Institute (EPRI) report indicated that, in most cases, motor and generator protection is not required. A 1992 IEEE publication [B13], based on that EPRI report, recommends "surge withstand standards be revised … to reflect higher capability." The IEEE publication refers to utility motors and utility environment throughout. Motors for industrial and for utility applications are built to the same standard, but the industrial environment is typically more severe, both electrically and non-electrically. Experience is an important factor in the industrial practice of wide usage of surge capacitors, while utilities make very little use of surge capacitors.

6.7.3.9.3 Special care required for proper installation of surge capacitors

Exploratory observations confirm the presence within *shielded* environments of voltage transients that approach arrester sparkover magnitudes and have exceedingly steep fronts (0.1 μs front-time). Although lightning does not usually entail such steep fronts, certain switching events do; for example, insulation breakdown, capacitor switching problems, or discharge of high lightning current-to-ground. As established previously, separation distance between protective equipment and apparatus to be protected invokes (sometimes serious) depreciation of protection. This is particularly true when steep wavefronts are involved. Surge capacitors, and preferably arresters also, should be connected directly to the machine terminals so that added inductance of the power cable circuit and of the surge capacitor lead will not interfere with their action. This limits the arrester and capacitor total lead lengths to one or two feet, thus requiring extreme care in the motor terminal box equipment arrangement.

Each application should be reviewed on its own. If several machines are fed from a common bus, for example, it may be sufficient to connect arresters on the line side of the feeder circuit breaker, placing only the capacitors at the machine terminals. Such practice generally requires that the insulated conductors of each motor feeder circuit are continuously enclosed in a grounded metallic raceway and that more than one feeder will be closed at the same time, along with a careful analysis of the arrester-protective level and the capacitor wave-shaping action as a function of the feeder length involved. A direct, low-impedance path between machine winding and surge-protective devices must exist on both line and ground sides of the circuit. A good ground connection to the machine frame is essential. Published standards do not prescribe the size of such a connection, but the National Electrical Code (NEC) (ANSI/NFPA 70-1993), Article 250-94, which specifies the size of the grounding electrode conductor, could be used as a guide. But, normally, the size of the protective-device ground terminal serves as a guide; for capacitors, this typically permits a ground wire up to AWG No. 2.

When capacitor and arrester cases are solidly bolted to the conducting structure of a machine terminal box or frame, such a ground wire may seem superfluous. However, it should not be omitted. It should lead directly to a solid *frame ground* with the least possible number of bolted joints intervening between the protective device and the machine stator. Such joints risk having high resistance because of corrosion, bolt loosening, or paint. Furthermore, in

Copyright The Institute of Electrical and Electronics Engineers, Inc.
Provided by IHS under license with IEEE
No reproduction or networking permitted without license from IHS Not for Resale

some machines this wire may be the only ground provided, the reason being that users now often specify that the surge-protective devices be mounted on ungrounded, insulated bases. This stems from the NEMA requirement for disconnection of surge-protective devices from machine leads when winding insulation is tested (NEMA MG 1-1993, Section 3.01.8). There are at least three reasons for this recommendation:

a) Over-potential winding tests may damage capacitors,
b) Such a test may falsely indicate bad insulation because the overvoltage is discharged to ground by an arrester,
c) Insulation resistance measurement by megohmmeter yields erroneous results because of the leakage current bypassed to ground through the discharge resistor built into every surge capacitor.

When a thorough preventive maintenance program includes such insulation tests once or twice a year, the necessity of disconnecting the surge-protection devices from the line leads becomes an expensive part of the program. Since it is desirable to maintain the permanent line connections, isolation of the protective equipment can best be achieved by disconnecting the equipment ground conductor. A readily removable conductor or link usually is provided for ease in testing. After the test, this connection should be restored and tightened securely; otherwise, protection may be lost.

6.8 References

This standard shall be used in conjunction with the following publications:

Accredited Standards Committee C2-1993, National Electrical Safety Code.[3]

ANSI C37.06-1987, American National Standard Preferred Ratings and Related Required Capabilities for AC High-Voltage Circuit Breakers Rated on a Symmetrical Current Basis.[4]

ANSI C50.10-1990, American National Standard General Requirements for Synchronous Machines.

ANSI C50.13-1989, American National Standard Requirements for Cylindrical Rotor Synchronous Generators.

ANSI C92.1-1982, American National Standard on Insulation Coordination.

ANSI/NFPA 70-1993, National Electrical Code.[5]

---

[3]The National Electrical Safety Code (NESC) is available from the Institute of Electrical and Electronics Engineers, Service Center, 445 Hoes Lane, P.O. Box 1331, Piscataway, NJ 08855-1331, USA.

[4]ANSI publications are available from the Sales Department, American National Standards Institute, 11 West 42nd Street, 13th Floor, New York, NY 10036, USA.

[5]NFPA publications are available from Publication Sales, National Fire Protection Agency, 1 Batterymarch Park, P.O. Box 9101, Quincy, MA 02269-9101, USA.

Copyright The Institute of Electrical and Electronics Engineers, Inc.
Provided by IHS under license with IEEE
No reproduction or networking permitted without license from IHS Not for Resale

IEEE Std C37.04-1979 (Reaff 1988), IEEE Standard Rating Structure for AC High-Voltage Circuit Breakers Rated on a Symmetrical Current Basis (ANSI).[6]

IEEE Std C37.13-1990, IEEE Standard for Low-Voltage AC Power Circuit Breakers Used in Enclosures (ANSI).

IEEE Std C37.20-1987, IEEE Standard for Switchgear Assemblies Including Metal-Enclosed Bus.[7]

IEEE Std C37.41-1988, IEEE Standard Design Tests for High-Voltage Fuses, Distribution Enclosed Single-Pole Air Switches, Fuse Disconnecting Switches, and Accessories (ANSI).

IEEE Std C37.91-1985 (Reaff 1991), IEEE Guide for Protective Relay Applications to Power Transformers (ANSI).

IEEE Std C37.96-1976, IEEE Guide for AC Motor Protection.

IEEE Std C57.12.00-1987, IEEE Standard General Requirements for Liquid-Immersed Distribution, Power, and Regulating Transformers (ANSI).

IEEE Std C57.12.01-1989, IEEE Standard General Requirements for Dry-Type Distribution and Power Transformers Including Those with Solid Cast and/or Resin-Encapsulated Windings.

IEEE Std C57.12.90-1987, IEEE Standard Test Code for Liquid-Immersed Distribution, Power, and Regulating Transformers; and Guide for Short-Circuit Testing of Distribution and Power Transformers (ANSI).

IEEE Std C57.12.91-1979, IEEE Standard Test Code for Dry-Type Distribution and Power Transformers.

IEEE Std C57.13-1978 (Reaff 1986), IEEE Standard Requirements for Instrument Transformers (ANSI).

IEEE Std C57.21-1990, IEEE Standard Requirements, Terminology, and Test Code for Shunt Reactors Over 500 kVA (ANSI).

IEEE Std C62.1-1989, IEEE Standard for Gapped Silicon-Carbide Surge Arresters for AC Power Circuits (ANSI).

IEEE Std C62.2-1987, IEEE Guide for the Application of Gapped Silicon-Carbide Surge Arresters for Alternating-Current Systems (ANSI).

---

[6]IEEE publications are available from the Institute of Electrical and Electronics Engineers, Service Center, 445 Hoes Lane, P.O. Box 1331, Piscataway, NJ 08855-1331, USA.

[7]This standard has been withdrawn and is out of print; however, photocopies can be obtained from the IEEE Standards Department, IEEE Service Center, 445 Hoes Lane, P.O. Box 1331, Piscataway, NJ 08855-1331, USA.

--`,,`,,`-`-`,,`,,`,`,,`---

Copyright The Institute of Electrical and Electronics Engineers, Inc.
Provided by IHS under license with IEEE
No reproduction or networking permitted without license from IHS Not for Resale

IEEE Std C62.11-1987, IEEE Standard for Metal-Oxide Surge Arresters for AC Power Circuits (ANSI).

IEEE Std C62.22-1991, IEEE Guide for the Application of Metal-Oxide Surge Arresters for Alternating-Current Systems.

IEEE Std C62.41-1991, IEEE Recommended Practice on Surge Voltages in Low-Voltage AC Power Circuits (ANSI).

IEEE Std 100-1992, The New IEEE Standard Dictionary of Electrical and Electronics Terms (ANSI).

IEEE Std 142-1991, IEEE Recommended Practice for Grounding of Industrial and Commercial Power Systems (IEEE Green Book) (ANSI).

NEMA MG1-1993, Motors and Generators.[8]

6.9 Bibliography

[B1] Abetti, P. A., "Bibliography on the Surge Performance of Transformers and Rotating Machines," *AIEE Transactions (Power Apparatus and Systems),* pt. III, vol. 77, pp. 1150–1164, 1958 (first supplement, vol. 81, pp. 213–219, 1962; second supplement, vol. 83, pp. 847–855, 1964).

[B2] Abetti, P. A., "Survey and Classification of Published Data on the Surge Performance of Transformers and Rotating Machines," *AIEE Transactions (Power Apparatus and Systems),* pt. III, vol. 77, pp. 1403–1414, 1958.

[B3] AIEE Committee Report, "Impulse Testing of Rotating AC Machines," *AIEE Transactions (Power Apparatus and Systems),* pt. III, vol. 79, pp. 182–187, 1960.

[B4] AIEE Committee Report, "Power System Overvoltage Produced by Faults and Switching Operations," *AIEE Transactions,* vol. 67, pp. 912–922, 1948.

[B5] AIEE Committee Report, "Switching Surges Due to Deenergization of Capacitative Circuits," *AIEE Transactions (Power Apparatus and Systems),* pt. III, vol. 76, pp. 562–564, Aug. 1957.

[B6] Beeman, D. L., Ed., *Industrial Power Systems Handbook*. New York: McGraw-Hill, 1955.

[B7] Bewley, L. V., *Traveling Waves on Transmission Systems,* 2nd ed. New York: Wiley, 1951.

[8]NEMA publications can be obtained from the National Electrical Manufacturers Association, 2101 L Street, NW, Washington, DC 20037.

Copyright The Institute of Electrical and Electronics Engineers, Inc.
Provided by IHS under license with IEEE
No reproduction or networking permitted without license from IHS Not for Resale

[B8] Drake, C. W., Jr., "Lightning Protection for Cement Plants, Part I—Surge Voltages on the Power System," *IEEE Transactions on Industry and General Applications,* vol. IGA-4, pp. 57– 61, Jan./Feb. 1968.

[B9] *Electric Utility Engineering Reference Book, Volume 3: Distribution System*. Trafford, PA: Westinghouse Electric Corporation, 1965.

[B10] *Electrical Transmission and Distribution Reference Book,* Westinghouse Electric Corporation, East Pittsburgh, PA, 1964.

[B11] Fink, D. G., and Carroll, J. M., *Standard Handbook for Electrical Engineers*. New York: McGraw-Hill, 1968.

[B12] Greenwood, A. N., *Electrical Transients in Power Systems*. New York: Wiley, 1971.

[B13] Gupta, B. K., Nilson, N. E., and Sharma, D. K., "Protection of Motors Against High Voltage Switching Surges," *IEEE Transactions on Energy Conversion,* 90 IC 558-7, T-EC, Mar. 1992.

[B14] Hendrickson, P. E., Johnson, L. B. and Schultz, N. R., "Abnormal Voltage Conditions Produced by Open Conductors on Three-Phase Circuits Using Shunt Capacitors," *AIEE Transactions (Power Apparatus and Systems),* pt. III, vol. 72, pp. 1183-1193, Dec. 1953.

[B15] Hunter, E. M., "Transient Voltages in Rotating Machines," *AIEE Transactions,* vol. 54, pp. 599–603, 1935.

[B16] IEEE Committee Report, "Coordination of Lightning Arresters and Current Limiting Fuses," *IEEE Transactions on Power Apparatus and Systems,* vol. PAS-91, pp. 1075–1078, May/June 1972.

[B17] IEEE Std 399-1990, IEEE Recommended Practice for Power Systems Analysis (IEEE Brown Book) (ANSI).

[B18] IEEE Std 666-1991, IEEE Design Guide for Electric Power Service Systems for Generating Stations (ANSI).

[B19] IEEE Working Group Progress Report, "Impulse Voltage Strength of AC Rotating Machines," *IEEE Transactions on Power Apparatus and Systems,* vol. PAS-100, No. 8, pp. 4041–4053, Aug. 1981.

[B20] IEEE Working Group Report, "Voltage Rating Investigation for Application of Lightning Arresters on Distribution Systems," *IEEE Transactions on Power Apparatus and Systems,* vol. PAS-91, pp. 1067–1074, May/June 1972.

[B21] *Industrial Power Systems Data Book*. Schenectady, NY: General Electric Company, 1961.

Copyright The Institute of Electrical and Electronics Engineers, Inc.
Provided by IHS under license with IEEE
No reproduction or networking permitted without license from IHS Not for Resale

[B22] Jackson, D. W., "Surge Protection of Rotating Machines," IEEE Tutorial Course on Surge Protection in Power Systems, Chapter 8, Pub 79EH0144-6 PWR, 1979.

[B23] Johnson, I. B., Schultz, A. J., Schultz, N. R., and Shores, R. B., "Some Fundamentals on Capacitance Switching," *AIEE Transactions (Power Apparatus and Systems),* pt. III, vol. 74, pp. 727–736, Aug. 1955.

[B24] Kaufmann, R. H., "Nature and Causes of Overvoltages in Industrial Power Systems," *Iron and Steel Engineer,* Feb. 1952.

[B25] Kaufmann, R. H., "Overvoltages in Industrial Systems—How to Reduce Them by Neutral Grounding," *Industrial Engineering News,* May/June 1951.

[B26] Kaufmann, R. H., "Surge-Voltage Protection of Motors as Applied in Industrial Power Systems." General Electric Company, Publication GET-3019, Dec. 1971.

[B27] Lal, K. C., Lee, W. J., and Jackson, W. V., "Testing and Selecting Surge Suppressors for Low-Voltage AC Circuits," *IEEE Transactions on Industry Applications,* vol. 26, no. 6, pp. 976–982, Nov./Dec. 1990.

[B28] Lear, C. M., McCann, G. D., and Wagner, C. F., "Shielding of Substations," *AIEE Transactions,* vol. 61, pp. 96–100, Feb. 1942.

[B29] Lewis, W. W., *The Protection of Transmission Systems Against Lightning*. New York: Wiley, 1950.

[B30] Liao, T. W., and Lee, T. H., "Surge Suppressors for the Protection of Solid-State Devices," *IEEE Transactions on Industry and General Applications,* vol. MA-2, pp. 44–52, Jan./Feb. 1966.

[B31] "Lightning Protection of Metal-Clad Switchgear Connected to Overhead Lines," *General Electric Review,* Mar. 1949.

[B32] Link, H., "Shielding of Modern Substations Against Direct Lightning Strokes," *IEEE Transactions on Power Apparatus and Systems,* vol. PAS-94, no. 5, pp. 1674–1679, Sept./Oct. 1975.

[B33] Montsinger, V. M., "Breakdown Curve for Solid Insulation." *Electrical Engineering*, vol. 54, pp. 1300–1301, Dec. 1935.

[B34] Mousa, A. M., "A Computer Program For Designing the Lightning Shielding Systems of Substations," *IEEE Transactions on Power Delivery,* vol. 6, no. 1, pp. 143–152, Jan. 1991.

[B35] Mousa, A. M., "Shielding of High Voltage and Extra High-Voltage Substations," *IEEE Transactions on Power and Systems,* vol. PAS-95, no. 4, pp. 1303–1310, July/Aug. 1976.

--`,,`,,`-`-`,,`,,`,`,,`---

Copyright The Institute of Electrical and Electronics Engineers, Inc.
Provided by IHS under license with IEEE
No reproduction or networking permitted without license from IHS
Not for Resale

[B36] Nailen, R. L., "Transient Surges and Motor Protection," *IEEE Transactions on Industry Applications,* vol. IA-15, no. 6, pp. 606–610, Nov./Dec. 1979.

[B37] Niebuhr, W. D., "Protection of Underground Systems Using Metal-Oxide Surge Arresters," IEEE Rural Electric Power Conference, 1981 Conference Record, pp. 9–13, CH1654-3.

[B38] Petrov, G. N., and Abramov, A. I., "Overvoltage Stresses in the Turn Insulation of Electrical Machinery Windings During Electromagnetic Transients," *Electrichestvo,* NC 7, pp. 24–31, Mar. 3, 1954.

[B39] Rudenberg, R., *Electrical Shock Waves in Power Systems*, Cambridge, MA: Harvard University Press, 1968.

[B40] Sakshaug, E. C., Kresge, J. S., and Miske, S. A., Jr., "A New Concept in Station Arrester Design," *IEEE Transactions on Power Apparatus and Systems,* Paper F76-393-9, pp. 647–656, Mar./Apr. 1977.

[B41] Sargent, M. A., "Monte Carlo Simulation of the lightning Performance of Overhead Shielding Networks of High-Voltage Stations," *IEEE Transactions on Power Apparatus and Systems,* vol. PAS-91, no. 4, pp. 1651–1656, July/Aug. 1972.

[B42] Sarris, A. E., "Lightning Protection for Cement Plants, Part II—Surge Voltages in the Cement Plant," *IEEE Transactions on Industry and General Applications,* vol. IGA-4, pp. 62–67, Jan./Feb. 1968.

[B43] Schultz, A. J., Van Wormer, F. C., and Lee, A. R., "Surge Performance of Aerial Cable, Part I—Surge Testing of the Aerial Cable and Analysis of the Test Oscillograms," *AIEE Transactions (Power Apparatus and Systems),* pt. III, vol. 76, pp. 923–930, Dec. 1957.

[B44] Shankle, D. F., Edwards, R. F., and Moses, G. L., "Surge Protection for Pipeline Motors," *IEEE Transactions on Industry and General Applications,* vol. IGA-4, pp. 171–176, Mar./Apr. 1968.

[B45] Skeates, W. F., Titus, C. H., and Wilson, W. R., "Severe Rates of Rise of Recovery Voltage Associated with Transmission Line Short Circuits," *AIEE Transactions (Power Apparatus and Systems),* pt. III, vol. 76, pp. 1256–1266, Feb. 1958.

[B46] Stacey, E. M., and Selchau-Hansen, P. V., "SCR Devices—AC Line Disturbance, Isolation and Short-Circuit Protection," *IEEE Transactions on Industry Applications,* vol. IA-10, pp. 88–105, Jan./Feb. 1974.

[B47] Van Wormer, F. C., Schultz, A. J., and Lee, A. R., "Surge Performance of Aerial Cable, Part II—Mathematical Analysis of the Cable Circuits and Synthesis of the Test Oscillograms." *AIEE Transactions (Power Apparatus and Systems),* pt. III, vol. 76, pp. 930–942, 1957.

Copyright The Institute of Electrical and Electronics Engineers, Inc.
Provided by IHS under license with IEEE
No reproduction or networking permitted without license from IHS Not for Resale

[B48] Wagner, C. F., *Electrical Transmission and Distribution Reference Book*, 4th Ed., Westinghouse Electric Corp., 1964.

[B49] Walsh, G. W., "A New Technology Station Class Arrester for Industrial and Commercial Power Systems," IEEE Industrial & Commercial Power Systems Technical Conference, 1977 Conference Record, pp. 30–35, CH1198-1.

[B50] Walsh, G. W., "A Review of Lightning Protection and Grounding Practices," *IEEE Transactions on Industry Applications,* vol. IA-9, no. 2, Mar./Apr. 1973.

[B51] Whitehead, E. R., "Mechanism of Lightning Flashover," EEI Research Project RP 50, Pub. 72-900, Illinois Institute of Technology, Feb. 1971.

[B52] Working Group E5 of Transmission Substations Subcommittee of the IEEE Substations Committee, "Guide for Direct Lightning Stroke Shielding of Substations," Draft No. 5, Mar. 1991.

[B53] Wright, M. T., and McLeay, K., "Interturn Stator Voltage Distribution Due to Fast Transient Switching of Induction Motors," IEEE Petroleum and Chemical Industry Conference, pp. 145–150, Conference Paper PCI-81-14.

--`,,`,,`-`-`,,`,,`,`,,`---

Copyright The Institute of Electrical and Electronics Engineers, Inc.
Provided by IHS under license with IEEE
No reproduction or networking permitted without license from IHS
Not for Resale

This page intentionally left blank

--`,,`,,`-`-`,,`,,`,`,,`---

Copyright The Institute of Electrical and Electronics Engineers, Inc.
Provided by IHS under license with IEEE
No reproduction or networking permitted without license from IHS

Not for Resale

Chapter 7
Grounding

7.1 Introduction

All phases of the subject of grounding applicable to the scope of the IEEE Industrial and Commercial Power Systems Department (I&CPSD) have been studied and documented in IEEE Std 142-1991 [B23]. That standard is the basic source of technical guidance for this chapter.[1]

Chapter 7 will identify and discuss those facets of grounding technology that relate to industrial plants. The topics to be discussed are as follows:

a) Introduction
b) System grounding
c) Equipment grounding
d) Static and lightning protection grounding
e) Connection to earth
f) Grounding resistance measurement

Unless otherwise noted, the discussions in this chapter address low-voltage systems. (For voltage system classifications, see Chapter 1, table 1-1.) When emergency and standby systems are involved, IEEE Std 446-1987 [B24], should be consulted.

7.2 System grounding

Alternating-current electric power distribution system grounding is concerned with the nature and location of an intentional electric connection between the electric system phase conductors and ground (earth). The common classifications of grounding found in industrial plant ac power distribution systems are as follows:

a) Ungrounded
b) Resistance grounded
c) Reactance grounded
d) Solidly grounded

There are several other methods for grounding electrical systems that are not covered in as much detail as the above methods. The following methods are deviations or variations of the above:

e) Corner-of-the-delta solidly grounded
f) Low-reactance
g) Mid-phase (solidly grounded) of a three-phase delta (commonly called center-tap)

[1]The numbers in brackets preceded by the letter B correspond to those in the bibliography in 7.8.

Copyright The Institute of Electrical and Electronics Engineers, Inc.
Provided by IHS under license with IEEE
No reproduction or networking permitted without license from IHS
Not for Resale

The method of electric system grounding may have a significant effect on the magnitude of phase-to-ground voltages that must be endured under both steady-state and transient conditions. In ungrounded electric systems that are characteristically subject to severe overvoltage, reduced useful life of insulation and associated equipment can be expected. Insulation failures usually cause system faults. In rotating electric machines and transformers where insulation space is limited, this conflict between voltage stress and useful life is particularly acute.

In addition to the control of system overvoltages, intentional electric system neutral grounding makes possible sensitive and high-speed ground-fault protection based on detection of ground-current flow. Solidly grounded systems, in most cases, are arranged so circuit protective devices will remove a faulted circuit from the system regardless of the type of fault. Any contact from phase to ground in the solidly grounded system thus results in instantaneous isolation of the faulted circuit and the associated loads. The experience of many engineers has been that greater service life of equipment can be obtained with grounded-neutral than with ungrounded-neutral systems. Furthermore, a very high order of ground-fault protection for rotating machinery may be acquired by a simple, inexpensive ground overcurrent relay. The protective qualities of rotating machine differential protection can be enhanced by grounding the power supply system.

Where service continuity is required, such as for a continuous operating process, the high-resistance grounded system can be used. With this type of grounded system, the intention is that any contact between one phase conductor and a grounded (earthed) surface will not cause the phase overcurrent protective device to operate (trip).

Overvoltages are minimized with any type of grounded electrical system. With high-resistance grounded systems, like the solidly grounded system, greater service life of equipment can be obtained, along with continuity of service.

For a detailed discussion and charts of the advantages and disadvantages, fault current, costs comparisons, system voltages, and areas of applications of the different methods of system grounding, see Catalog GET-3548 [B35].

The following practice is recommended for establishing the system grounding connection:

a) Systems used to supply phase-to-neutral loads must be solidly grounded as required by the National Electrical Code (NEC) (ANSI/NFPA 70-1993).[2] They are
   120/240 V, single-phase, three-wire
   208Y/120 V, three-phase, four-wire
   480Y/277 V, three-phase, four-wire

b) Systems that may/could be resistance grounded are
   480 V, three-phase, three-wire
   480Y/277 V, three-phase, four-wire without phase-to-neutral loads
   600 V, three-phase, three-wire

[2]Information on references can be found in 7.7.

Copyright The Institute of Electrical and Electronics Engineers, Inc.
Provided by IHS under license with IEEE
No reproduction or networking permitted without license from IHS Not for Resale

5000 volt class
2400 V, three-phase, three-wire
4160 V, three-phase, three-wire

8000 volt class
6900 V, three-phase, three-wire

15 000 volt class
12 000 V, three-phase, three-wire wye
12 470 V, three-phase, three-wire wye
13 200 V, three-phase, three-wire wye
13 800 V, three-phase, three-wire wye

7.2.1 Ungrounded systems

The ungrounded system is actually high-reactance capacitance grounded as a result of the coupling to ground of every energized conductor. The operating advantage, sometimes claimed for the ungrounded system stems from the ability to continue operations during a single phase-to-ground fault, if sustained, will not result in an automatic trip of the circuit. There will be merely the flow of a small charging current to ground. It is generally conceded that this practice introduces potential hazards to insulation in apparatus supplied from the ungrounded system (Beeman 1955 [B4]).

There is divided opinion among engineers about the degree of the overvoltage problem on ungrounded systems (600 V and less) and the probability of its affecting the electrical service continuity. Many engineers believe that fault locating is improved and insulation failures are reduced by using some type of grounded power system. Others feel that under proper operating conditions the ungrounded system offers an added degree of service continuity not jeopardized by insulation failures resulting from steady state and the probability of transient overvoltages. Additional discussion of the factors influencing a choice of the grounded or ungrounded system is given in Chapter 1 of IEEE Std 142-1991 [B23] and GET-3548 [B35].

As long as no disturbing influences occur on the system, the phase-to-ground potentials (even on an ungrounded system) remain steady at about 58% of the phase-to-phase voltage value. For the duration of the single phase to ground fault, the other two phase conductors throughout the entire raceway system are subjected to 73% overvoltage. It is, therefore, extremely important to locate the ground fault promptly and repair or remove it before the abnormal voltage stresses produce insulation breakdown on machine windings, other equipment, and circuits. Because of the capacitance coupling to ground, the ungrounded system is subject to dangerous overvoltages (five times normal or more) as a result of an intermittent contact ground fault (arcing ground) or a high inductive reactance connected from one phase to ground or phase to phase.

Accumulated operating experience indicates that, in general purpose industrial power distribution systems, the overvoltage incidents associated with ungrounded operation reduce the useful life of insulation so that electric circuit and machine failures occur more frequently than they do on grounded power systems. The advantage of an ungrounded system not imme-

Copyright The Institute of Electrical and Electronics Engineers, Inc.
Provided by IHS under license with IEEE
No reproduction or networking permitted without license from IHS
Not for Resale

diately dropping load upon the occurrence of a phase to ground fault may be largely eliminated by the practice of ignoring a ground fault and allowing it to remain on the system until a second fault occurs causing a power interruption. An adequate detection system with an organized program for removing ground faults is considered essential for operation of the ungrounded system. These observations are limited to ac systems. Direct-current system operation is not subject to many of the overvoltage hazards present in ac systems. One final consideration for ungrounded systems is the necessity to apply overcurrent devices based upon their "single-pole" short-circuit interrupting rating, which can be equal to or in some cases is less than their "normal rating."

7.2.2 Resistance-grounded systems

Resistance-grounded systems employ an intentional resistance connection between the electric system neutral and ground. This resistance appears in parallel with the system-to-ground capacitive reactance, and this parallel circuit behaves more like a resistor than a capacitor. Resistance-grounded systems can take the forms of

a) High-resistance grounded systems
b) Low-resistance grounded systems

Investigations recommend that high-resistance grounding should be restricted to 5 kV class or lower systems with charging currents of about 5.5 A or less and should not be attempted on 15 kV systems (Walsh 1973 [B37]), unless proper ground relaying is employed. The reason for not recommending high-resistance grounding of 15 kV systems is the assumption that the fault will be left on the system for a period of time. Damage to equipment from continued arcing at the higher voltage can occur. If the circuit is opened immediately, there is no problem.

In a high-resistance connection ($R \leq X_{co}/3$, where R is the intentional resistance between the electric system neutral and ground, and $X_{co}/3$ is the total system-to-ground capacitive reactance), the overvoltage-producing tendencies of a pure capacitively grounded system will be sufficiently reduced. In a low-resistance grounded system, phase-to-ground potentials are rigidly controlled, and sufficient phase-to-ground fault current is also available to operate ground-fault relays selectively. X_{co} is difficult to determine in a high resistance grounded system without testing (Bridger 1983 [B7]), thus 5 A to 10 A is recommended for the phase-to-ground fault current limitation.

The ohmic value of the resistance should be not greater than the total system-to-ground capacitive reactance ($X_{co}/3$). The neutral resistor current should be at least equal to or greater than the system total charging current. For details on obtaining and testing the value of the total system charging current. (See Bridger 1983 [B7].)

High-resistance grounding provides the same advantages as ungrounded systems yet limits the steady state and severe transient overvoltages associated with ungrounded systems. Continuous operation can be maintained. Essentially, there is minimal phase-to-ground shock hazard during a phase-to-ground fault since the neutral is not run with the phase conductors and the neutral is shifted to a voltage approximately equal to the phase conductors. There is

Copyright The Institute of Electrical and Electronics Engineers, Inc.
Provided by IHS under license with IEEE
No reproduction or networking permitted without license from IHS Not for Resale

no arc flash hazard, as there is with a solidly grounded system, since the fault current is limited to approximately 5 A.

Another benefit of high-resistance grounded systems is the limitation of ground fault current to prevent damage to equipment. High value of ground faults on solidly grounded systems can destroy the magnetic iron of the rotating machinery. Small winding faults on solidly grounded systems may be readily repaired without replacing the magnetic iron. However, not having to replace the lamination with equipment installed on high-resistance grounded systems, when a phase-to-ground fault occurs, is a benefit.

High-resistance grounded systems should require immediate investigation and clearing of a ground fault even though the ground-fault current is of a very low magnitude (usually less than 10 A). This low magnitude of continuous fault current can deteriorate adjacent insulation or other equipment. As long as a phase-to-ground fault does not escalate into an additional phase-to-ground fault on a different phase, resulting in a phase-to-phase fault and operating the protective device, the continuous operation can continue. It is essential to monitor and alarm on the first phase-to-ground fault. If the fault impedance is zero, solidly connected to ground, the high-resistance system takes on the characteristics of a solidly grounded system until the fault is located and repaired.

The key to locating a ground fault on a high-resistance grounded system is the ability to injection a traceable ground signal to the faulted system. This fault-indicating system permits fault location with the power system energized. An oversized, large opening, special clamp on type ammeter is used. Some skill is required in finding the location of the fault. (See GET-35548 [B35] for additional information.)

High-resistance grounding will limit to a moderate value the transient overvoltages created by an inductive reactance connection from one phase to ground or from an intermittent-contact phase-to-ground short circuit. It will not avoid the sustained 73% overvoltage on two phases during the presence of a ground fault on the third phase. Nor will it have much effect on a low-impedance overvoltage source, such as an interconnection with conductors of a higher voltage system, a ground fault on the outer end of an extended winding transformer or step-up autotransformer, or a ground fault at the transformer-capacitor junction connection of a series capacitor welder.

Low-resistance grounding requires a grounding connection of a much lower resistance. It is common to have 5 kV and 15 kV systems low-resistance grounded. The resistance value is selected to provide a ground-fault current acceptable for relaying purposes. The generator neutral resistor is usually limited for large generators to a minimum of 100 A and to a maximum of 1.5 times the normal rated generator current (Johnson 1945 [B28]). Typical current values used range from 400 A (to as low as 100 A) on modern systems using sensitive toroid or core balance current transformer ground-sensor relaying and up to perhaps 2000 A in the larger systems using residually connected ground overcurrent relays. In mobile electric shovel application, much lower levels of ground-fault current (50 to 25 A) are dictated by the acute shock-hazard considerations. One final consideration for resistance-grounded systems is the necessity to apply overcurrent devices based upon their “single-pole” short-circuit interrupting rating, which can be equal to or in some cases less than their “normal rating.”

Copyright The Institute of Electrical and Electronics Engineers, Inc.
Provided by IHS under license with IEEE
No reproduction or networking permitted without license from IHS
Not for Resale

7.2.3 Reactance-grounded system

Reactance-grounded systems are not ordinarily employed in industrial power systems. The permissible reduction in available ground-fault current without risk of transitory overvoltages is limited. The criterion for curbing the overvoltages is that the available ground-fault current be at least 25% of the three-phase fault current ($X_0/X_1 \leq 10$, where X_0 is the zero-sequence inductive reactance, and X_1 is the positive-sequence inductive reactance of the system). The resulting fault current can be high and present an objectionable degree of arcing damage at the fault, leading to a preference for resistance grounding. Much greater reduction in fault-current value is permissible with resistance grounding without risk of overvoltage. One final consideration for reactance grounded systems is the necessity to apply overcurrent devices based upon their "single-pole" short-circuit interrupting rating, which can be equal to or in some cases less than their "normal rating."

7.2.4 Solidly grounded system

Solidly grounded systems exercise the greatest control of overvoltages but result in the highest magnitudes of ground-fault current. These high-magnitude fault currents may introduce problems and generate other design problems in the equipment grounding system. Solidly grounded systems are used extensively at all operating voltages. At high voltages, impedance grounding sensing equipment costs needs to be considered. Large magnitude ground-fault currents generally do not affect electrical equipment braced for that stress. Note that the pressure relief duty of surge arresters will be affected by solidly grounded systems. Also, the amount of insulation for medium voltage cable may be affected. Also, a large magnitude of available ground-fault current is desirable to secure optimum performance of phase-overcurrent trips or interrupting devices. The low phase-to-neutral driving voltage of the supply system (346 V in the 600 V system and 277 V in the 480 V system) lessens the likelihood of dangerous voltage gradients in the ground-return circuits even when higher than normal ground-return impedances are present.

The solidly grounded system has the highest probability of escalating into a phase-to-phase or three-phase arcing fault, particularly for the 480 and 600 V systems. The danger of sustained arcing for phase-to-ground fault probability is also high for the 480 and 600 V systems, and low or near zero for the 208 V system. For this reason ground fault protection shall be required for systems over 1000 A (ANSI/NFPA 70-1993). A safety hazard exists for solidly grounded systems from the severe flash, arc burning, and blast hazard from any phase-to-ground fault.

7.2.5 System-grounding design considerations

There are three levels of conductor insulation for medium-voltage cables: 100, 133, and 173% levels. The solidly grounded system permits the use of 100% insulation level. When the fault on the other system will raise the system voltage above normal during the time of the fault, 133% insulation level should be specified if the fault is cleared within one hour. When the fault will remain on the system for an indefinite time, 173% voltage level insulation should be used (Bridger 1983 [B7]; NEMA WC5-1992 [B33]; GET-3548 [B35]).

Copyright The Institute of Electrical and Electronics Engineers, Inc.
Provided by IHS under license with IEEE
No reproduction or networking permitted without license from IHS Not for Resale

The intent of the preceding advisory recommendations is to promote broad application of the fewest variety of system-grounding patterns that will satisfy the operational requirements of industrial plant electric power systems in general. Even minor deviations in design practice within a particular variety are to be avoided as much as possible. Nonetheless, it is admitted that the list of recommended patterns is not all inclusive and hence is not to be regarded as mandatory (IEEE Std 446-1987 [B24]).

Utility practices may justify a deviation from the patterns listed in previous paragraphs. Circumstances can arise that may well justify solid grounding with circuit patterns other than those named in these recommendations. For example, when the power supply is obtained from the utility company via feeders from a 4.16Y/2.4 kV solidly grounded substation bus, the user will be justified in adopting that pattern. In such inevitable situations it is imperative that adequate ground-return conductors be provided to minimize the inherent step-and-touch potentials of high ground-fault currents associated with solidly grounded systems and to provide instantaneous ground fault relaying or equivalent to minimize the fault duration. See the National Electrical Safety Code (NESC) (Accredited Standards Committee C2-1993), and IEEE Std 80-1986.

Step voltage or step potential is the potential difference between two points on the earth's surface separated by a distance of one pace of a human (assumed to be 1 m [one meter]) in the direction of the maximum potential gradient (IEEE Std 100-1992 [B22]). Within a substation during a fault condition with a large current flow over and through the ground, a potential is developed across the soil surface as a result of the soil's resistance. Current flow through earth from a lightning discharge will develop a potential also. Touch potential or touch voltage is the potential difference between a grounded metallic structure and a point on the earth's surface separated by a distance equal to the normal maximum reach, approximately 1 m. These potential differences, step or touch, could be dangerous and could result from induction or fault conditions, or both.

Furthermore, should the user desire to serve 120 V single-phase, one-side-grounded, load circuits, there could be firm justification for solidly grounding the midpoint of one phase of a 240 V delta system to obtain a 240 V three-phase four-wire delta pattern. This is a utility practice where a large single phase 120/240 V load exists and a small three-phase load is required.

Ungrounded systems can be converted to solid, corner-grounded delta, thus gaining the advantage of control of overvoltages and longer life of electrical equipment insulation. The use of a 120 V three-phase delta system for general-purpose power could well justify solid corner-of-the-delta grounding, although such systems are not designed today.

In designing the electric power supply system to serve electrically operated excavating machinery, the existence of a greatly accentuated degree of electric-shock-voltage exposure may justify the use of a system-grounding pattern employing a 25 A resistive grounding connection (to establish a 25 A level of available ground-fault current). The achievement of keeping personnel secure from dangerous electric-shock injury, both operators and bystanders, may require the reduction in rotating-machine fault-detection sensitivity, which is therefore sacrificed.

Copyright The Institute of Electrical and Electronics Engineers, Inc.
Provided by IHS under license with IEEE
No reproduction or networking permitted without license from IHS Not for Resale

There may be sound justification for the insertion of a reactor in the neutral connection of a generator that is to be connected to a solidly grounded three-phase distribution system in order to avoid excessive generator-winding current in response to phase-to-ground fault on the system. The reactance of the neutral grounding reactor for generator grounding is calculated such that current in any winding does not exceed three-phase short-circuit current and is not less than 25% of three-phase short-circuit current. A minimum short-circuit current of not less than 25% of the three-phase short-circuit current is required to minimize transient overvoltages.

The foregoing examples clearly illustrate the need for design flexibility to tailor engineer the system grounding pattern to cope with the unique and unusual situations. However, the decision to deviate from the advisory recommendations should be based on a specific engineering evaluation of a need for that deviation.

7.3 Equipment grounding

Equipment grounding pertains to the system of electric conductors (grounding conductor and ground buses) by which all non-current-carrying metallic structures within an industrial plant are interconnected and grounded. The main purposes of equipment grounding are as follows:

a) To maintain low potential difference between metallic members, minimizing the possibility of electric shocks to personnel in the area (bonding);
b) To contribute to superior protective device performance of the electric system, safety of personnel and equipment; and
c) To avoid fires from volatile materials and the ignition of gases in combustible atmospheres by providing an effective electric conductor system for the flow of ground-fault currents and lightning and static discharges to essentially eliminate arcing and other thermal distress in electrical equipment.

All metallic conduits, cable trays, junction boxes, equipment enclosures, motor and generator frames, etc., should be interconnected by an equipment grounding conductor system that will satisfy the foregoing requirements. The rules for achieving these objectives are given in the NEC and the NESC. These rules should be considered as minimum, and in some cases other grounding and bonding means should supplement those requirements.

Previous practice for effecting equipment grounding within an industrial facility was to first establish an external grounded loop, or a series of interconnected grounded loops, about the building and then connect or bond every electrical device to that loop. While such practice meets bonding rules, it does not always provide a path of least impedance. This happens because the path for the ground fault is usually not adjacent to the phase conductor, and that introduces additional reactance in the ground path.

In order to assure a low impedance for the grounding conductor, it is important that the grounding conductor be run adjacent to the power cables with which it is associated; i.e., in the same conduit or the same multi-conductor cable as the power conductors.

An equipment grounding conductor should be routed with the circuit phase conductors supplying a circuit. This will achieve the desired low-impedance path necessary for safe operation. Since the earth has an unknown resistance value, it should not be used for a return path.

--`,,`,,`-`-`,,`,,`,`,,`---

Copyright The Institute of Electrical and Electronics Engineers, Inc.
Provided by IHS under license with IEEE
No reproduction or networking permitted without license from IHS Not for Resale

When an insulation failure occurs along an electric power circuit, causing an electrical connection between the energized conductor and a metal enclosure, there exists a tendency to raise the enclosure to the same electrical potential that exists on the power conductor. Unless all such enclosures have been grounded, in an effective manner, an insulation breakdown will cause dangerous electric potential to appear on the enclosure creating an electric shock hazard to anyone touching it. The energy released during an arcing ground fault may be sufficient to cause a fire or explosion or serious flash burns to personnel. Proper setting of ground relays and intentional grounding of the metallic enclosures in a manner that assures the presence of both adequate ground-fault current capacity and a low value of ground-fault circuit impedance will interrupt the flow of ground-fault current and will thus minimize electric shock and fire hazards (Kaufmann 1954 [B31]).

Figures 7-1 and 7-2 show typical system and equipment grounding for a three-phase electric system. Solidly grounded, resistance-grounded, and ungrounded systems all have the same equipment grounding requirements. The equipment grounding conductors are connected to provide a low-impedance path for ground-fault current from each metallic enclosure or from equipment to the grounded terminal at the transformer (figures 7-1 and 7-2). The impedance of the complete ground-fault circuit should be low enough to ensure sufficient flow of ground-fault current for fast operation of the proper circuit protective devices, and to minimize the potential for stray ground currents on solidly grounded systems. To provide a ground-fault current path of low impedance and adequate capacity, either the cross-sectional area of the raceway must be large or a parallel grounding conductor must be run inside the raceway (see figure 7-2). As shown in figures 7-3 and 7-4, equipment grounding conductors are also required in resistance-grounded and ungrounded systems for personnel shock protection. The grounding conductors must provide paths of sufficient capacity to operate protective devices when phase-to-phase or phase-to-ground faults occur at different locations on a power system.

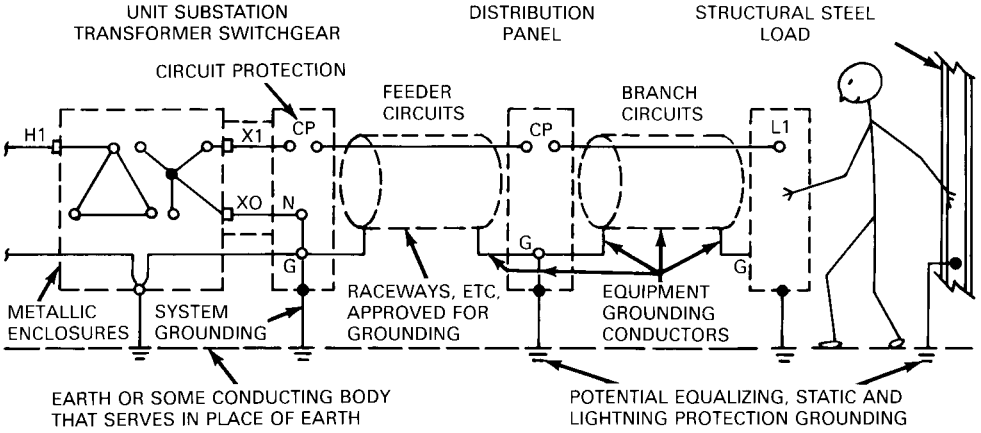

Figure 7-1—Grounding arrangement for ground-fault protection in solidly grounded system, three-phase, three-wire circuits

Copyright The Institute of Electrical and Electronics Engineers, Inc.
Provided by IHS under license with IEEE
No reproduction or networking permitted without license from IHS
Not for Resale

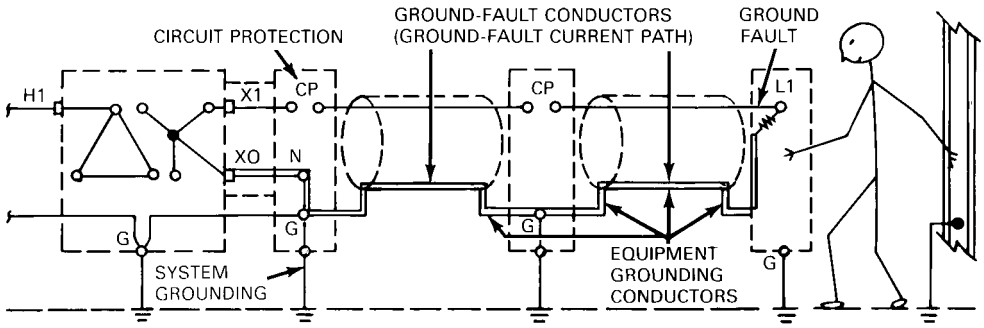

Figure 7-2—Fault-current path through ground-fault conductors in solidly grounded system, three-phase, three-wire circuits

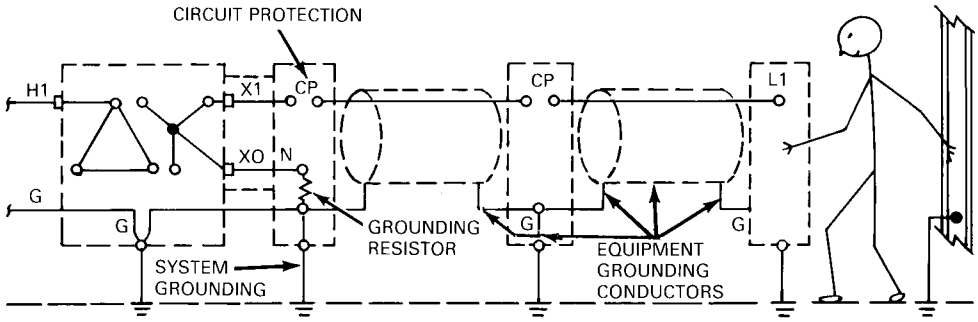

Figure 7-3—Grounding arrangement for ground-fault protection in resistance-grounded system, three-phase, three-wire circuits

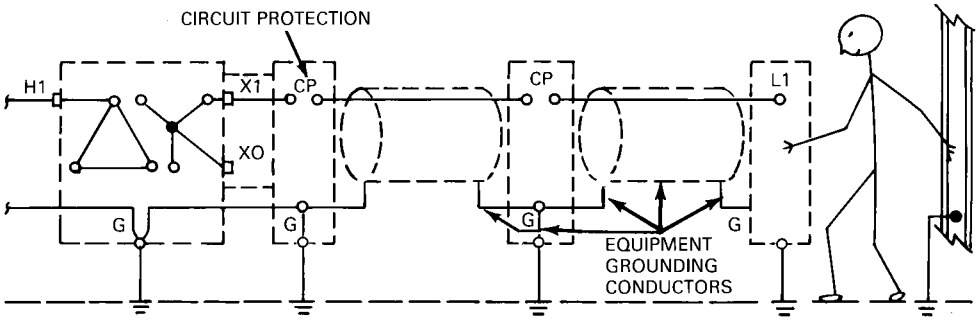

Figure 7-4—Grounding arrangement for ground-fault protection in ungrounded system, three-phase, three-wire circuits

Copyright The Institute of Electrical and Electronics Engineers, Inc.
Provided by IHS under license with IEEE
No reproduction or networking permitted without license from IHS
Not for Resale

Economics and operating requirements have resulted in an increasing number of industrial plants owning and operating the transformer substation connecting the industrial plant with the electric utility. In addition to providing the proper equipment grounding in such a substation, step and touch potentials also must be maintained at a safe level. An appropriately designed grounding mat has traditionally served the purposes of providing for both the safety of personnel in and near the substation and proper grounding of the substation equipment. Empirical methods have been used extensively in the past for ground mat design due to the great number of calculations required for a perfectly rigorous ground mat analysis. Computer programs have added to the accuracy and ease of ground mat design. Persons involved in substation grounding are advised to refer to IEEE Std 80-1986 [B20] for substation grounding design requirements and detailed calculation procedures. See Meliopous 1988 [B32].

The ground grid of the utility substation is often interconnected with the industrial plant grounding system, either intentionally by overhead service, or a buried ground wire or unintentionally through cable tray, conduit systems, or bus duct enclosures. As a result of this interconnection, the plant grounding system is elevated to the same potential above remote earth as the substation grid during a high-voltage fault in the substation. Dangerous surface potentials within an industrial plant as well as within the substation also must be prevented. In certain cases, hazardous surface potentials may be eliminated by effectively isolating the substation ground system from the plant ground system. In most cases, integrating the two grids together and suitably analyzing both systems for step and touch potentials have reduced these potentials to acceptable levels.

7.3.1 Computer grounding

A new IEEE Color Book, IEEE Std 1100-1992 (the Emerald Book) [B26], which deals with powering and grounding sensitive electronic equipment, has recently been published.

Computers are used in industry process control, accounting, data transmission, etc. Computer system grounding is very important for optimum performance. It requires coordination with power-conditioning equipment, communication circuits, special grounding requirements of computer logic circuits, and surge arresters.

Computer manufacturers specify grounding techniques for their equipment but some are inconsistent, do not follow known grounding practices, or violate the requirements of the NEC and OSHA. Mutually acceptable solutions can be achieved by returning to fundamental principles of grounding. See IEEE Std 1100-1992 [B26] and IEEE Std 142-1991 [B23].

Computer system grounding accomplishes multiple functions, such as safety to operating personnel, a low-impedance fault-return path, and maintenance of the equipotential ground of all units of a computer system.

Connecting the frames of all units of a computer system to a common point should ensure that they stay at the same potential. Connecting that point to the ground should ensure that the equipotential is also ground potential. These objectives are achieved when the units are connected to an ac power source and include a safety equipment ground conductor in each cable

Copyright The Institute of Electrical and Electronics Engineers, Inc.
Provided by IHS under license with IEEE
No reproduction or networking permitted without license from IHS Not for Resale

or conduit that carries power that comes from a common source (IEEE Std 142-1991 [B23]; IEEE Std 1100-1992 [B26]; Kalbach 1981 [B29]).

However, when there is more than one power source, each with its separate ground, this system will create "noise" currents in the grounding systems that are connected to the units of the computer system. In such cases, a signal reference grid may be used. This grid may be a large sheet of copper foil installed under the computer or a 2 ft by 2 ft mesh of copper conductors laid out on the subfloor (see figure 7-5) to equalize the voltage over a broader frequency range. All computer units should be bonded to this grid in addition to the equipment ground conductor. The signal reference grid is grounded to the same central grounding point as the frames of the system components.

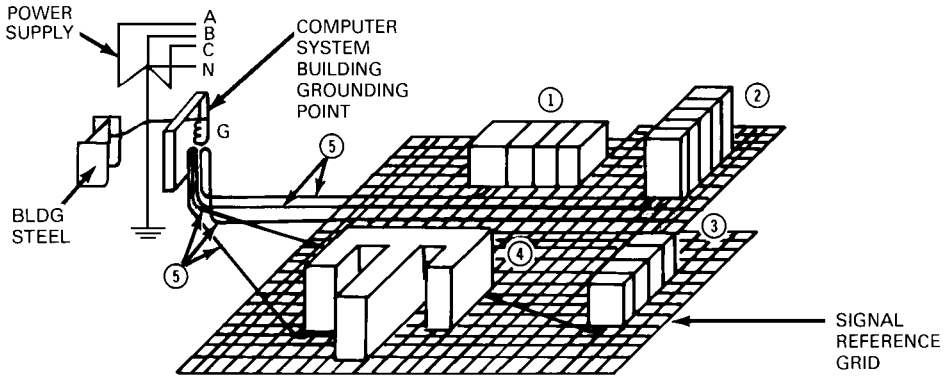

NOTES:
① through ④ are typical computer system modules.
⑤ is the *green wire* safety equipment grounding conductor.
(*Green wire* is connected to the system ground through point G.)

Figure 7-5—Computer units connected to signal reference grid and to ac ground

An alternative signal reference grid could be a raised floor metal supporting structure, which is electrically conducting and suitably bonded at all joints. All precautions outlined in IEEE Std 142-1991 [B23] and Kalbach 1981 [B29] should be followed for the application of a signal reference grid.

Preferred methods of grounding the following types of equipment are given in detail in Chapter 2 of IEEE Std 142-1992 [B23]:

a) Structures
b) Outdoor stations
c) Large generators and motor rooms
d) Conductor enclosures
e) Motors
f) Portable equipment
g) Surge/lightning protective devices

Copyright The Institute of Electrical and Electronics Engineers, Inc.
Provided by IHS under license with IEEE
No reproduction or networking permitted without license from IHS Not for Resale

In many specific types of installations, the applicable national, state, or local electrical codes prescribe such grounding practices as a mandatory requirement.

7.4 Static and lightning protection grounding

7.4.1 Static grounding

Industrial plants handling solvents, dusty materials, or other flammable products often have a potentially hazardous operating condition because of static charge accumulating on equipment, on materials being handled, or even on operating personnel.

The discharge of a static charge to ground or to other equipment in the presence of flammable or explosive materials is often the cause of fires and explosions, which result in substantial loss of life and property each year.

The simple solution of grounding individual equipment is not always the solution to the problem and is not always possible in many processes. Each installation should be studied so an adequate method of control may be selected.

The protection of human life is the prime objective in the control of electrostatic charges. In addition to the direct danger to life from explosion or fire created by an electrostatic discharge, there is the possibility of personal injury from being startled by an electric shock. This may in turn, induce an accident such as a fall from a ladder or platform.

Another objective in controlling static electricity is the avoidance of

a) Investment losses, buildings, contained equipment, or stored materials
b) Lost production, idle workers, delivery penalties (real or intangible)

The avoidance of losses by providing electrostatic control in this manner represents good insurance. EMI (electric magnetic interference) emanating from static electric discharges can cause interference with sensitive electronic equipment, including critical control and communications equipment.

An additional reason to implement effective electrostatic control may be to assure product quality. For example, static charges in grinding operations can prevent grinding to the degree of fineness desired in the finished product. In certain textile operations static charges may cause fibers to stand on end instead of lying flat, resulting in an inferior product.

Material handled by chutes, conveyors, or ducts has been known to develop and accumulate static charges, causing the material to cling to the surfaces of the chutes or ducts and thereby clog openings or create increased friction to wear surfaces. Static charges on persons can result in damage to sensitive electronic components or corruption of valuable data. Static problems in printed circuit board manufacturing or assembly is controlled by having the personnel grounded through 1–5 MΩ resistor by the wearing of wrist straps.

Copyright The Institute of Electrical and Electronics Engineers, Inc.
Provided by IHS under license with IEEE
No reproduction or networking permitted without license from IHS Not for Resale

Chapter 3 of IEEE Std 142-1982 contains a detailed treatment of the following topics:

a) Purpose of static grounding
b) Fundamental causes of static, magnitudes, and conditions required for a static charge to cause ignition
c) Measurement and detection of static potentials
d) Hazards in various facilities and mechanisms
e) Recommended control methods

Also see ANSI/NFPA 77-1988.

7.4.2 Lightning-protection grounding

Lightning-protection grounding is concerned with the control of current discharges, in the atmosphere, originating in cloud formations, to earth. The function of the lightning grounding system is to convey these lightning discharge currents safely to earth without incurring damaging potential differences across electrical insulation in the industrial power system, without overheating lightning grounding conductors, and without the disruptive breakdown of air between the lightning ground conductors and other metallic members of the structure (ANSI/NFPA 780-1992 [B3]; AIEE Committee Report 1958 [B1]; Fagan and Lee 1970 [B14]).

A lightning risk evaluation should be made to determine if lightning protection should or should not be installed. The risk evaluation considers

a) Human occupancy
b) Exposure/structural factors affecting safety
c) Type of construction
d) Use and value of contents
e) Degree of exposure and isolation
f) Feasibility/practical factors
g) Thunderstorm frequency
h) Ground area covered

Lightning represents a vicious source of overvoltage. It is capable of discharging a potential of one half million volts or more to an object. The current in the direct discharge may be as high as 200 000 A. The rate at which this current builds up may be as much as 10 000 A/μs.

The presence of such high-magnitude fast-rising surge current emphasizes the need for high-discharge capability in surge arresters and low impedance in the connecting leads. For example, should a direct lightning stroke contact a lightning rod or a mast on an industrial building and encounter an inductance of as little as 1 μH with a current buildup rate of 10 000 A/μs, could result in a 10 000 V potential drop across this inductance. Lightning protection consists of placing suitable air terminals or diverter elements at the top of or around the structure to be protected, and connecting them by an adequate down conductor to the earth itself. (In lightning terminology a “down conductor” is the conductor serving as a lead going down to earth. It is not, as in utility terms, a broken power line.)

Copyright The Institute of Electrical and Electronics Engineers, Inc.
Provided by IHS under license with IEEE
No reproduction or networking permitted without license from IHS Not for Resale

The down conductor (1) must have adequate current-carrying capacity and (2) must not include any high-resistance or high-reactance portions or connections and (3) should present the least possible impedance to earth. There should be no sharp bends or loops in surge-protective grounding circuits. Bend radii should be as large as possible, since sharp bends increase the reactance of the conductor. Reactance is much more critical than resistance, because of the very high frequency of the surge front.

Remote lightning strikes can induce dangerous surges in nearby cable, can cause malfunction of control circuits, and can cause electronic interference. Surge arresters and surge capacitors, properly applied, can reduce the effects of these induced surges. Ground currents caused by lightning strikes can cause large differentials of potential between different earth points, causing high currents in cable sheaths and high voltages between cable phase conductors and ground.

7.4.2.1 Zone of protection

In past standards the cone of protection was believed to be an angle of either 45° or 60° from the vertical air terminal depending on the probability of protection desired. Any area under the imaginary line drawn from the top of the air terminal, at the angle of the degree of protection sought, was considered protected from a lightning strike. The current standard (ANSI/NFPA 780-1992) uses an imaginary rolling ball (sphere). The radius of this rolling sphere, is 45 m (150 ft). With the sphere resting on two points, any area under the sphere is considered to be in the zone of protection. To improve the degree of probability of protection, the radius is decreased.

There are several methods of lightning protection, such as

a) Franklin air terminal
b) Faraday cage
c) Early emission (ionizing) streamer
d) Eliminator, deterrent, sphere, ball

7.4.2.2 Air terminals

The Franklin air terminals are connected to cross conductors and down conductors. The cross conductors and down conductors constitute a Faraday cage. The Franklin air terminal and the Faraday cage are combined to form a complete system and referred to by several terms, air terminal system, Faraday cage and/or the Franklin method or the Fortress concept. Steel-framed structures, adequately grounded, meet the above requirements with the addition of air terminals. Typically the air terminals are spaced 6 m (20 ft) to 7.6 m (25 ft) apart on the edge of the structure and 15 m (50 ft) on the interior of the roof. Cross connections are made at 45 m (150 ft). Without a steel framework, down conductors must provide at least two paths to earth for a lightning stroke to any air terminal (ANSI/NFPA 780-1992).

Copyright The Institute of Electrical and Electronics Engineers, Inc.
Provided by IHS under license with IEEE
No reproduction or networking permitted without license from IHS
Not for Resale

7.4.2.3 Early emission ionizing streamer

Ionization lightning conductor technology dates back to 1914. A patent was issued in 1931. In 1953 Alphonse Capart, the son of the inventor, improved this device. Early-emission ionizing-streamer lightning-protection devices are considered dynamic devices compared to the Franklin cone or the Faraday cage. Radioactive sources are used to obtain ionization of the air around the tip of the air terminal. The theory states that the radioactive ionization terminal produces a rising air stream. This column acts as an extended air terminal reducing the tension or, if the potential is sufficient, a conductive streamer is provided (Heary 1988 [B18]). The effect is a tall Franklin air terminal with a large zone of protection. Two down conductors are required for each ionizing "mast."

7.4.2.4 Eliminator, deterrent, system

This controversial method has been in existence for 20 years. The National Fire Protection Association (NFPA) Standards Council at their meeting in June/July 1988 [Action 88-39], denied acceptance of this method based on lack of technical justification and the lack of specific code language. NFPA also called this method "scientifically unconfirmed technology." Mounted on each air terminal is an array of spikes emanating from the center of the air terminal. The theory is to dissipate the charge. Its success relies on a very effective use of the Faraday cage concept and excellent grounding practices.

7.4.2.5 Down conductors

Locations of down conductors will depend on the location of air terminals, size of structure being protected, most direct coursing, security against damage or displacement, and location of metallic structures, water pipes, grounding electrode, and ground conditions. If the structure has metallic columns, these columns will act as down conductors. The air terminals must be interconnected by conductors to make connection with the columns. The average distance between down conductors should not exceed 30 m (100 ft).

Every down conductor must be connected, at its base, to an earthing or grounding electrode. This electrode needs to be not more than 0.6 m (2 ft) away from the base of the building. The electrode should extend below the building foundation if possible. The length of the grounding conductor is highly important. A horizontal run of, say, 15.2 m (50 ft) to a better electrode (such as a water pipe) is much less effective than a connection to a driven rod alongside the structure itself. Electrodes should contact the earth from the surface downward to avoid flashing at the surface. Earth connections should be made at uniform intervals about the structure, avoiding as much as possible the grouping of connections on one side. Properly made connections to earth are an essential feature of a lightning rod system for protection of buildings.

The larger the number of down conductors and grounding electrodes, the lower will be the voltage developed within the protection system, and the better it will perform. This is one of the great advantages of the steel-framed building. Also, at the bottom of each column is a footing, a very effective electrode. However, internal column footings of large buildings dry up and can become ineffective since they seldom are exposed to ground water.

Copyright The Institute of Electrical and Electronics Engineers, Inc.
Provided by IHS under license with IEEE
No reproduction or networking permitted without license from IHS Not for Resale

Interior metal parts of a nonmetal-framed building that are within 6 ft (1.8 m) of a down conductor need to be connected to that down conductor. Otherwise, they may sustain side-flashes from it, incurred because of voltage drop in the lower portion of that down conductor and electrode. It is important to tie together all ground rods and other metallic structures entering the earth; otherwise lightning strikes (even remote ones) can cause serious differences of potential representing a danger to personnel and equipment.

It is highly desirable to keep the stroke (lightning) current away from buildings and structures involving hazardous liquids, gases, or explosives. Separate diverter protection systems should be used for tanks, tank farms, and explosive manufacture and storage. The diverter element is one or more masts, or one or more effectively grounded elevated wires between masts that are effectively grounded.

Tanks not protected by a diverter system should be well grounded to conduct the current of direct strokes to earth.

Lightning protection of power stations and substations includes the protection of station equipment by surge arresters. (Refer to Chapter 3 of IEEE Std 142-1991 [B23].) These arresters should be mounted on, or closely connected to, the frames of the principal equipment that they are protecting. They also may be mounted on the steel framework of the station or substation where all components are closely interconnected by the grounding grid. The surge arrester grounding conductor should be as short and straight as possible and connected to the common station ground bus. The NEC requires that an AWG No. 6 (4.11 mm diameter for solid or 4.67 mm diameter for stranded) or larger conductor be used. Larger sizes may be desirable with larger systems, based on the magnitude of power follow current.

7.5 Connection to earth

7.5.1 General discussion

To improve the connection to earth and to reduce the resistance to earth, two or more ground rods are suggested. As described in IEEE Std 142-1991 [B23], the distance between the two rods must be the depth of the first rod plus the depth of the second rod. Numerous books and articles show the distance between two standard length 8 or 10 ft rods to be 3 m (10 ft), which is incorrect.

Connections to earth having acceptably low values of impedance are needed to discharge lightning stroke currents, dissipate the released bound charge resulting from nearby strokes, and drain off static voltage accumulations (Chapter 4 of IEEE Std 142-1991 [B23]).

The presence of overhead high-voltage transmission circuits may introduce a requirement for a connection to earth to safely pass the ground-fault current that would result from a broken phase conductor falling on some part of the building structure.

To a great extent the internal electric distribution system installed within commercial buildings and industrial plants is entirely enclosed in grounded metal. Except for cable tray sys-

Copyright The Institute of Electrical and Electronics Engineers, Inc.
Provided by IHS under license with IEEE
No reproduction or networking permitted without license from IHS
Not for Resale

tems, conductors are enclosed in metallic conduit, metallic armor, or metal raceway. The other electric elements of equipment and machines can be expected to be encased in metal cabinets or metallic machine frames. All of these metallic enclosures and cable trays will be interconnected. The metallic enclosures will be bonded to other metallic components within the area, such as building structural members, piping systems, messenger cables, etc. Thus the local electric system will be self-contained within its own shell of conducting metal.

An electrical system can be designed to operate adequately and safely without any direct connection to earth itself. This can be likened to the electric distribution system as installed on an airplane. The airplane structure constitutes an adequate grounding system. No connection to earth is needed to achieve an adequate, safe electric system. Space vehicles and airplanes operate electrical systems and usually several computer systems without any connection to earth.

7.5.2 Recommended acceptable values

The most elaborate grounding system that can be designed may prove to be inadequate unless the connection of the system to the earth is adequate and has a low resistance (AIEE Committee Report 1958). The earth connection is one of the most important parts of the grounding system. It is also the most difficult part to design and to obtain.

The perfect connection to earth would have zero resistance, but this is impossible to obtain. Ground resistances of less than 1 Ω can be obtained, although such a low resistance may not be necessary. The resistance required varies inversely with the fault current to ground. The larger the fault current, the lower the resistance must be.

For larger substations and generating stations, the earth resistance should not exceed 1 Ω. For smaller substations and for industrial plants, in general, a resistance of less than 5 Ω should be obtained, if practical. The NEC, Article 250, approves the use of a single made-electrode for the system-grounding electrode, if its resistance does not exceed 25 Ω.

7.5.3 Resistivity of soils

The resistivity of the earth is a prime factor in establishing the resistance of a grounding electrode. The resistivity of soil varies with the depth from the surface, with the moisture and chemical content, and with the soil temperature. For representative values of resistivity for general types of soils and the effects of moisture and temperature, see Chapter 4 of IEEE Std 142-1991 [B23] and appendix B of the NEC.

7.5.4 Soil treatment

Soil resistivity may be reduced anywhere from 15–90% by chemical treatment, depending upon the kind and texture of the soil. There are several chemicals suitable for this purpose, including sodium chloride, magnesium sulfate, copper sulfate, and calcium chloride. Common salt and magnesium sulfate are most commonly used.

Copyright The Institute of Electrical and Electronics Engineers, Inc.
Provided by IHS under license with IEEE
No reproduction or networking permitted without license from IHS Not for Resale

Chemicals are generally applied by placing them in the circular trench around the electrode in such a manner as to prevent direct contact with the electrode. While the effects of treatment will not become apparent for a considerable period, they may be accelerated by saturating the area with water. Also, such treatment is not permanent and must be renewed periodically, depending on the nature of chemical treatment and the characteristics of the soil.

7.5.5 Existing electrodes

All grounding electrodes fall into one of two categories: those that are an inherent part of the structure or its foundation, and those that have been specifically installed for electrical grounding purposes.

The NEC, Article 250, designates underground metal water piping, available on the premises, as part of the required grounding electrode system. This requirement prevails regardless of length, except that when the effective length of buried pipe is less than "10 ft (3.05 m)," it shall be supplemented with an electrode of the type named in Article 250, Section 250-81.

For safety grounding and for small distribution systems where the ground currents are of relatively low magnitude, such buried metal water pipe electrodes are used because they exist and are economical in first cost. However, before reliance can be placed on any electrodes of this group, it is essential that their resistance to earth be measured to ensure that some unforeseen discontinuity has not seriously affected their suitability. The use of plastic pipe in new water systems and of wooden ones in older systems will eliminate the grounding value of the electrode. Even iron or steel piping may include gaskets that act as insulators. Sometimes small metal (brass) wedges are used to ensure electrical continuity. These wedges should be replaced when repairs are made. Interior piping systems that are likely to become energized must be bonded to the electric system grounding conductor. If the piping system contains a member designed to permit easy removal, such as a water meter, a bonding jumper must be installed to bridge the removable member.

The recent increase in the use of plastic pipes for water supply to buildings removes one of the most common sources of complaint by the water utilities. The absence of buried metal piping, however, demands that some other suitable grounding electrode be located or created.

7.5.6 Concrete-encased grounding electrodes

Concrete below ground level is a good electrical conductor, as good as moderately low-resistivity earth. Consequently, metal electrodes encased in such concrete will function as excellent grounding electrodes (Fagan and Lee 1970 [B14]; Wiener 1970 [B38]). (See also the NEC, Article 250, Section 250-81 (c).) In areas of poor soil conductivity, the beneficial effects of the concrete encasement are most pronounced.

To create a made electrode by encasement of a metal electrode in concrete would probably not be economical, but most industrial establishments employ much concrete-encased metal below grade for other purposes. The reinforcing steel in concrete foundations and footings

Copyright The Institute of Electrical and Electronics Engineers, Inc.
Provided by IHS under license with IEEE
No reproduction or networking permitted without license from IHS
Not for Resale

are good examples. The concrete encasement of steel, in addition to contributing to low-grounding resistance, serves to immunize the steel against corrosive disintegration, such as would take place if the steel was in direct contact with the earth (NEC). Though copper and steel are in contact with each other within the bed of moist concrete, destructive disintegration of the steel member does not take place.

Steel reinforcing bars (re-bars) in foundation piers usually consist of groups of four or more vertical members held by horizontal spacer square rings at regular intervals. The vertical members are wired to heavy horizontal members in the spread footing at the base of the pier. Measurements show that such a pier has an electrode resistance of about half the resistance of a simple ground rod driven to the same depth in earth. Electrical connection to the re-bar system is conveniently made by a bar welded to one vertical re-bar and a J-bolt for the column base plate. The J-bolt then becomes the electrode connection. A weld to a re-bar at a point where the bar is in appreciable tension is to be avoided.

Usually such footings appear every 4.6 m (15 ft) by 6 m (20 ft) in all directions in industrial buildings. A good rule of thumb for determining the effective overall resistance of the grounding mat is to divide the resistance of one typical footing by half the number of footings around the outside wall of the building. (Inner footings aid little in lowering the overall resistance.)

Copper cable embedded in concrete is similarly beneficial, a fact that may be of particular value under circumstances of high earth resistivity.

7.5.7 Made electrodes

Made electrodes may be subdivided into driven electrodes, buried strips or cables, grids, buried plates, and counterpoises. The type selected will depend upon the type of soil encountered and the available depth. Driven electrodes are generally more satisfactory and economical where bedrock is 3 m (10 ft) or more below the surface, while grids, buried strips, or cables are preferred for lesser depths. Increasing the diameter of a ground rod has little effect, while increasing the length of the rod has a significant effect on reducing the resistance to earth. Grids are frequently used for substations or generating stations to provide equipotential areas throughout the entire station where hazards to life and property would justify the higher cost. They also require the least amount of buried material per ohm of ground conductance. Buried plates have not been used extensively in recent years because of the higher cost compared to rods or strips. Also, when used in small numbers, they are the least reliable type of made electrode. The counterpoise is a form of the buried cable electrode, and its use is generally confined to locations having high-resistance soils, such as sand or rock, where other methods are not satisfactory.

Discussions on methods of calculating resistance to earth, current-loading capacity of soils, recommended methods and techniques of constructing connections to earth, and the testing of the resistance of electrodes may be found in Chapter 4 of IEEE Std 142-1991 [B23].

--`,,`,,`-`-`,,`,,`,`,,`---

Copyright The Institute of Electrical and Electronics Engineers, Inc.
Provided by IHS under license with IEEE
No reproduction or networking permitted without license from IHS Not for Resale

7.5.8 Galvanic corrosion

There has developed an increased awareness of possible aggravated galvanic corrosion of buried steel members if cross-bonded to buried dissimilar metal, such as copper (Colman and Frostick 1955 [B9]; Hertzberg 1970 [B19]; Zastrow 1967 [B39]).

The result has been a trend to seek a design of electrical grounding electrode that is, galvanically, neutral with respect to the steel structure. In some cases, the grounding electrode design employs steel-exposed metal electrodes with insulated copper cable interconnections (Colman and Frostick 1955).

The corrosion of buried steel takes place even without a cross connection to buried dissimilar metal. The exposed surface of the buried steel inherently contains bits of dissimilar conducting material, foreign metal fragments, or slag inclusions, which create local galvanic cells and local circulating currents. At spots where current leaves the metal surface, metal ions leave the parent metal and account for destructive corrosion. The cross-bonding to dissimilar metal may aggravate the rate of corrosion, but is not the only cause for the action.

Electrical engineering technology should recognize the problem and seek grounding electrode designs that will produce no observable increase in the rate of corrosive disintegration of nonelectrical buried metal members. An overriding priority dictates that the electrical grounding electrode itself not suffer destruction by galvanic corrosion. Relative economics will be an inevitable factor in the design choice.

A timely release of new knowledge bearing on this problem is the electrical behavior pattern of concrete-encased metal below grade (see 7.5.6). The relationship of concrete-encased steel re-bar to galvanic corrosion is as follows:

a) There is generally an extensive array of concrete-encased steel-reinforcing members within the foundations and footings, which collectively account for a huge total surface area, resulting in extremely low-current density values at the steel surface.
b) The concrete-encased re-bars themselves constitute an excellent, permanent, low-resistance earthing connection with little or no economic penalty.
c) Current flow across the steel-concrete boundary does not disintegrate the steel as it would if the steel was in contact with earth.

7.6 Ground resistance measurement

The ground resistance as defined in IEEE Std 142-1991 [B23] is "…the ohmic resistance between it (ground electrode) and a remote grounding electrode of zero resistance." Thus, ground resistance is the resistance of the soil to the passage of electric current from the electrode into the surrounding earth.

Grounding system resistance, expressed in ohms, should be measured after a system is installed and at periodic intervals thereafter. Usually, precision in measurement is not required. Measurement of ground resistance is necessary to verify the adequacy of a new

Copyright The Institute of Electrical and Electronics Engineers, Inc.
Provided by IHS under license with IEEE
No reproduction or networking permitted without license from IHS Not for Resale

grounding system with the calculated value, and to detect changes in an existing grounding system. It is important that specified or lower resistance be obtained, since all calculations for personnel and equipment safety are based on the specified grounding resistance. The margin of safety will be reduced if the resistance exceeds the specified value.

Three components constitute the resistance of a grounding system:

a) The resistance of the grounding electrode conductor and grounding conductor connection to the electrode;
b) Contact resistance between the grounding electrode and the soil adjacent to it;
c) The resistance of the body of earth immediately surrounding the electrode.

Grounding electrodes are usually of sufficient size or cross section, and grounding connections are usually made by proven clamps or welding, so that their resistance is a negligible part of the total resistance. If the grounding electrode is free from paint or grease and the earth is packed firmly around the electrode, contact resistance is also negligible. Rust on an iron electrode has little or no effect.

When the current flows from a grounding electrode to earth, it radiates current in all directions. It can be considered that current flows through a series of concentric spherical like earth shells, all of equal thickness, surrounding the grounding electrode. The shell immediately surrounding the electrode has the smallest cross-sectional area and so offers greatest resistance. As the distance from the electrode increases, each shell becomes correspondingly larger in cross-section and offers less resistance. Finally, a distance from the electrode is reached where additional shells do not add significantly to the total ground resistance. Therefore, the resistance of the surrounding earth is the largest component of the resistance of a grounding system.

To improve the connection to earth and to reduce the resistance to earth, two or more ground rods are suggested. As described in IEEE Std 142-1991 [B23], the distance between the two rods must be the depth of the first rod plus the depth of the second rod. Numerous books and articles show the distance between the two standard length 8 or 10 ft rods to be 3 m (10 ft), which is incorrect.

It is possible to calculate the resistance of any system of grounding electrodes. Several factors can affect the calculated value due to considerable variation in soil resistivity at a given location and time. Soil resistivity depends on soil material, the moisture content, and the temperature. If all factors are considered, formulas for calculating the performance of grounding systems become very complicated and involve so many indeterminate factors that they are of little value. Many formulas have been developed, but they are only useful as general guides. The actual ground resistance of a grounding system can be determined only by measurement.

7.6.1 Methods of measuring ground resistance

This section covers only commonly used methods of measuring ground resistance. The ohmic value measured is called resistance; however, there is a reactive component that should be considered when the ohmic value of the ground under test is less than 0.5 Ω, as in

Copyright The Institute of Electrical and Electronics Engineers, Inc.
Provided by IHS under license with IEEE
No reproduction or networking permitted without license from IHS Not for Resale

the case of large substation ground grids. This reactive component has little effect on grounds with an impedance higher than 1 Ω.

7.6.1.1 Equipment and material

Equipment and material required for ground-resistance measurement are as follows:

a) Ground resistance can be measured by commercially available, self-contained instruments, which give readings directly in ohms. These instruments are small and very easy to use because they require no external power source. They are equipped either with batteries or a generator. If necessary, however, approximate results can be obtained with a portable ac ammeter and voltmeter where power supply and transformer with nominal 120 V secondary (to isolate the grounding system under test from the grounding system of the power supply) is available at the location where measurements are to be made. However, it is not easy to obtain accurate results with an ammeter and voltmeter at energized stations.
b) Two auxiliary test electrodes in addition to the ground electrode (or ground mat) under test
c) Flexible single-conductor cable AWG No. 14 or larger, at least 600 V rated, of sufficient length
d) Alligator clips for connecting test leads
e) Lineman gloves (optional)
f) A field notebook

It is recommended that manufacturer's instructions be followed when connecting the leads to the measuring instrument and taking measurements. Test circuits shown in the following paragraphs are for reference only.

7.6.1.2 Methods of measurement

Four most commonly used methods of measuring and testing ground resistance are described as follows:

a) *Fall of potential method*. This involves the passing of a current of known magnitude through the grounding electrode (or grounding network) under test and an auxiliary current electrode, and measuring the influence of this current in terms of voltage between the electrode under test and a second auxiliary potential electrode. (See figure 7-6.)

For a large grounding network, both current and potential electrodes should be placed as far from the grounding network under test as practical (depending on the geography of the surroundings), so that they are outside the influence of the ground to be tested. A distance of 750 to 1000 ft or more from the grounding network is recommended for grounding mats with dimensions in the order of 300 ft by 300 ft. This is required to obtain measurements of adequate accuracy. The potential electrode, for large grounding networks (low-resistance

Copyright The Institute of Electrical and Electronics Engineers, Inc.
Provided by IHS under license with IEEE
No reproduction or networking permitted without license from IHS Not for Resale

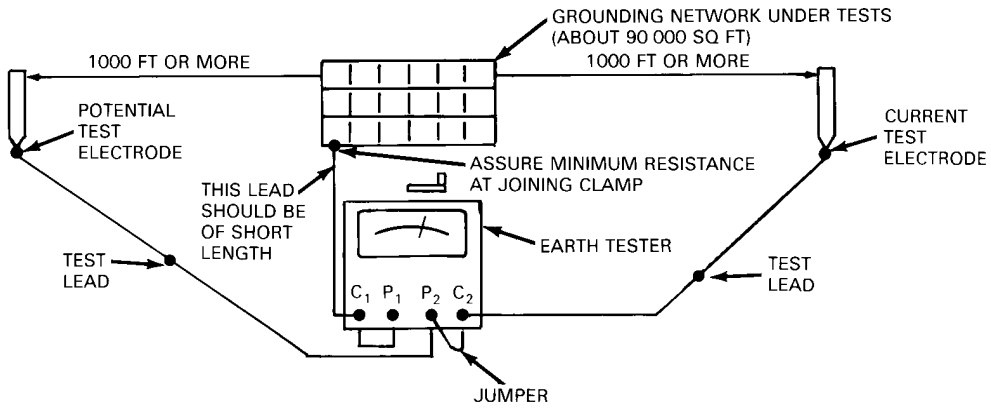

NOTES:
(1) For measuring test electrode resistance, remove connection of one test lead at each measurement but keep both jumpers connected (each test electrode should have less than 500 Ω resistance).
(2) Network:
(a) Remove jumper between P_2 and C_2.

Figure 7-6—Test circuit for measuring test electrode resistances and resistance of the large grounding network

grounds), should be driven at several points. Resistance readings are then plotted for each point as a function of distance from the grounding network, and a curve is drawn. The value in ohms at which the plotted curve appears to level off is taken as the resistance of the grounding network under test. When it is found that the curve is not leveling off, the current electrode should be moved farther from the grounding electrode under test. However, for a high-resistance ground, there is no preferred placement of electrodes, and the most practical placement of electrodes should be chosen.

The resistance between the ground network (electrode) under test and the auxiliary electrodes should be measured as shown in figure 7-6. The resistance measured should be no more than 500 Ω for increased accuracy in the measurement of low-resistance ground network. To obtain the lowest possible auxiliary electrode resistance, locate the electrodes in moist locations, such as drainage ditches or ponds, or drive two or more rods spaced 3 or 4 ft apart. The test probes need to be driven a foot or two into the earth.

After checking the auxiliary electrodes' resistance, connect test probes to the instrument as shown in figure 7-6 for measuring ground resistance of the grounding network (electrode) under test. Reverse connections at the instrument and take another reading. The difference in both readings should be less than 15%, otherwise auxiliary electrodes should be moved farther away from the ground network (electrode) under test.

This method should be used for large substations, industrial plants, and generating stations where grounding network resistance is usually less than 1 Ω.

Copyright The Institute of Electrical and Electronics Engineers, Inc.
Provided by IHS under license with IEEE
No reproduction or networking permitted without license from IHS Not for Resale

For a small ground mat or single-rod-driven electrode, the influence of the ground to be tested is assumed to be negligible about 100 to 125 ft from the rod under test. The current electrode can be placed about 100 to 125 ft from the ground rod under test. To measure earth resistance of a single rod driven electrode or small ground mat, the potential electrode can be placed midway between the current electrode and the ground electrode under test as shown in figure 7-7. The exact distance for the potential probe is 62% of the distance from the point under test to the current probe. Readings with the circuit as connected are taken.

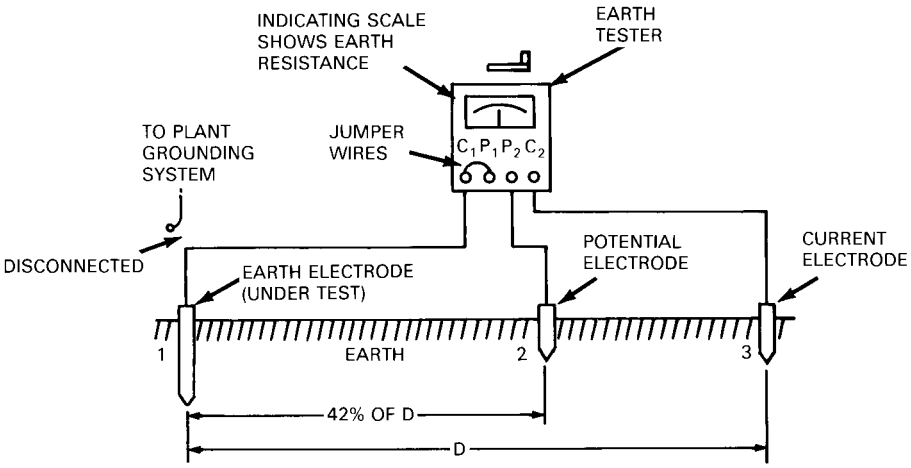

Figure 7-7—Test circuit for measuring earth resistance of ground rod or small grid—fall of potential method

This method should be used for a single-rod electrode or small ground mat and where the earth electrode under test can be separated from the water-pipe system, which usually has negligible ground resistance.

b) *Two-point method*. The two-point method is usually used to determine the resistance of a single grounding rod driven near a residence where it is necessary to know only that a given grounding electrode's resistance to earth is below a stipulated value, for instance, 25 Ω or less. In this method, the total resistance of the unknown and an auxiliary grounding rod, usually existing metallic water-pipe system (with no insulating joints), is measured. Since the water-pipe system's resistance is considered negligible, the resistance measured by the meter will be that of the grounding electrode under test. (See figure 7-8.)

This method is subject to large errors for low-resistance grounding networks but is very useful and adequate where a go, no-go type of test is required.

c) *Three-point method*. This method involves the use of two auxiliary electrodes as in the case of fall-of-potential method (see figure 7-7). The resistance between each pair of grounding electrodes in series is measured and designated as $R_{1\text{-}2}$, $R_{1\text{-}3}$, and $R_{2\text{-}3}$,

Copyright The Institute of Electrical and Electronics Engineers, Inc.
Provided by IHS under license with IEEE
No reproduction or networking permitted without license from IHS
Not for Resale

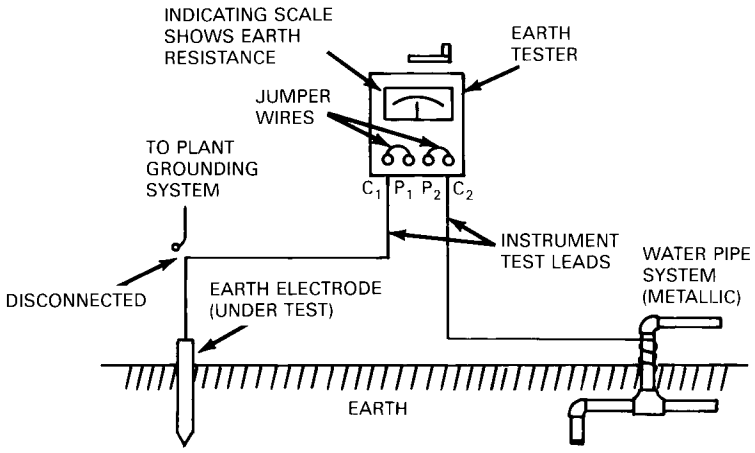

Figure 7-8—Test circuit for measuring earth resistance of a ground rod—two-terminal method

where $R_{1\text{-}2}$ is the resistance of the grounding electrode under test and one auxiliary electrode. The resistance of electrode under test can be obtained by solving for R_1:

$$R_1 = \frac{R_{1-2} + R_{1-3} - R_{2-3}}{2}$$

If two auxiliary electrodes are of higher resistance than the grounding electrode under test, small errors in the individual measurements may result in a large error. For this method the electrodes must be at least 20 ft or more apart, otherwise absurdities may arise in the calculations, such as zero or even negative resistance. Either alternating current of commercial frequency or direct current may be used. When direct current is used, the effect of stray alternating current is eliminated though stray direct current may give a false reading. If alternating current is used, stray alternating current of the same frequency as the test current may introduce an error; however, stray direct currents have no effect. These effects may be minimized by taking a reading with the current flowing in one direction, then reversing the polarity and taking a reading with current flowing in the other direction. An average of these two readings will be an accurate value.

This method is not suitable for large substation grounds, and the fall-of-potential method is recommended.

d) *Ratio method*. This method uses two auxiliary electrodes as in the fall-of-potential method. The resistance of the electrode under test is compared with the known resistance of auxiliary electrodes. This method is not commonly used since it has limitations in measuring low-resistance grounding networks of large area. It is necessary to use the fall-of-potential method for accurate measurements.

Copyright The Institute of Electrical and Electronics Engineers, Inc.
Provided by IHS under license with IEEE
No reproduction or networking permitted without license from IHS Not for Resale

It is preferable to measure grounding network resistance before a station is energized. When this is not possible, instruments designed for use at energized stations should be used and necessary precautions should be taken when connecting or disconnecting test leads. Where practical, avoid locations that will cause the test leads to be parallel to transmission lines.

7.7 References

This standard shall be used in conjunction with the following publications. When the following standards are superseded by an approved revision, the revision shall apply:

Accredited Standards Committee C2-1993, National Electrical Safety Code.[3]

ANSI/NFPA 70-1993, National Electrical Code.[4]

7.8 Bibliography

[B1] AIEE Committee Report, "Voltage Gradients Through the Ground Under Fault Conditions," *AIEE Transactions on Power Apparatus and Systems*, pt. III, vol. 77, pp. 669–692, Oct. 1958.

[B2] ANSI/NFPA 77-1988, Static Electricity.

[B3] ANSI/NFPA 780-1992, Lightning Protection Code.

[B4] Beeman, D. L., Ed., *Industrial Power Systems Handbook*. New York: McGraw-Hill, 1955, Chapters 5–7.

[B5] Bisson, A. J., and Rochau, E. A., "Iron Conduit Impedance Effects in Ground Circuit Systems," *AIEE Transactions on Applications and Industry*, pt. II, vol. 73, pp. 104–107, July 1954.

[B6] Brereton, D. S., and Hickock, H. N., "System Neutral Grounding for Chemical Plant Power Systems," *AIEE Transactions on Applications and Industry*, pt. II, vol. 74, pp. 315–320, Nov. 1955.

[B7] Bridger, Jr., B., "High-Resistance Grounding," *IEEE Transactions on Industry Applications*, vol. IA-19, no. 1, pp. 15–21, Jan./Feb. 1983.

[B8] Bullard, W. R., "Grounding Principles and Practice. Part IV—System Grounding," *Electrical Engineering*, vol. 64, Apr. 1945, pp. 145–151.

---

[3]The National Electrical Safety Code (NESC) is available from the Institute of Electrical and Electronics Engineers, Service Center, 445 Hoes Lane, P.O. Box 1331, Piscataway, NJ 08855-1331, USA.

[4]NFPA publications are available from Publication Sales, National Fire Protection Association, 1 Batterymarch Park, P.O. Box 9101, Quincy, MA 02269-9101, USA.

Copyright The Institute of Electrical and Electronics Engineers, Inc.
Provided by IHS under license with IEEE
No reproduction or networking permitted without license from IHS Not for Resale

[B9] Colman, W. E., and Frostick, H. G., "Electrical Grounding and Cathodic Protection at the Fairless Works," *AIEE Transactions on Applications and Industry*, pt. II, vol. 74, pp. 19-24, Mar. 1955.

[B10] Crawford, L. E., and Griffith, M. S., "A Closer Look at 'the Facts of Life' in Ground Mat Design," *IEEE Transactions on Industry Applications*, vol. IA-15, pp. 241–250, May/June 1979.

[B11] Dalziel, C. F., "Effects of Electric Shock on Man," *IRE Transactions on Medical Electronics*, vol. PGME-5, pp. 44–62, July 1956.

[B12] Dunki-Jacobs, Jr., "The Reality of High-Resistance Grounding," *IEEE Transactions on Industry Applications*, vol. IA-13, no. 5, pp. 469–475, Sept./Oct. 1977.

[B13] "Electrical Systems Below 600 V," *IEEE Transactions on Industry Applications*, vol. IA-10, pp. 175–189, Mar./Apr. 1974.

[B14] Fagan, E. J., and Lee, R. H., "The Use of Concrete-Encased Reinforcing Rods as Grounding Electrodes," *IEEE Transactions on Industry and General Applications*, vol. IGA-6, pp. 337–348, July/Aug. 1970.

[B15] Gienger, J. A., Davidson, O. C., and Brendel, R. W., "Determination of Ground Fault Current on Common AC Grounded-Neutral Systems in Standard Steel or Aluminum Conduit," *AIEE Transactions on Applications and Industry*, pt. II, vol. 79, pp. 84–90, May 1960.

[B16] Harvie, R. A., "Avoiding Hazards from Earth Currents in Industrial Plants," *IEEE Transactions on Industry Applications*, vol. IA-13, pp. 207–214, May/June 1977.

[B17] Harvie, R. A., "Hazards During Ground Faults on 480 V Grounded Systems," *IEEE Transactions on Industry Applications*, vol. IA-10, pp. 190–196, Mar./Apr. 1974.

[B18] Heary, K. P. et al., "An Experimental Study of Ionizing Air Terminal Performance," *IEEE Summer Power Meeting Conference Paper*, SUM PWR-88, 572-0, 1988.

[B19] Hertzberg, L. B., "The Water Utilities Look at Electrical Grounding," *IEEE Transactions on Industry and General Applications*, vol. IGA-6, pp. 278–281, May/June 1970.

[B20] IEEE Std 80-1986 (Reaff 1991), IEEE Guide for Safety in AC Substation Grounding (ANSI).

[B21] IEEE Std 81-1983, IEEE Guide for Measuring Earth Resistivity, Ground Impedance, and Earth Surface Potentials of a Ground System (ANSI).

[B22] IEEE Std 100-1992, The New IEEE Standard Dictionary of Electric and Electronic Terms (ANSI).

[B23] IEEE Std 142-1991, IEEE Recommended Practice for Grounding of Industrial and Commercial Power Systems (IEEE Green Book) (ANSI).

[B24] IEEE Std 446-1987, IEEE Recommended Practice for Emergency and Standby Power Systems for Industrial and Commercial Applications (IEEE Orange Book).

Copyright The Institute of Electrical and Electronics Engineers, Inc.
Provided by IHS under license with IEEE
No reproduction or networking permitted without license from IHS Not for Resale

[B25] IEEE Std 487-1992, IEEE Recommended Practice for the Protection of Wire Line Communications Facilities Serving Electric Power Stations.

[B26] IEEE Std 1100-1992, IEEE Recommended Practice for Powering and Grounding of Sensitive Electronic Equipment (IEEE Emerald Book) (ANSI).

[B27] Jensen, C., "Grounding Principles and Practice. Part II—Establishing Grounds," *Electrical Engineering*, vol. 64, pp. 68–74, Feb. 1945.

[B28] Johnson, A. A., "Grounding Principles and Practice. Part III—Generator-Neutral Grounding Devices," *Electrical Engineering*, vol. 64, pp. 92–99, Mar. 1945.

[B29] Kalbach, J. F., "Electrical Environment for Computers," Conference Paper 81CH1674-1, Presented at IEEE Industrial and Commercial Power Systems Conference, St. Louis, May 6, 1981.

[B30] Kaufmann, R. H., "Let's Be More Specific About Equipment Grounding," *Proceedings of the American Power Conference*, vol. 24, pp. 913–922, 1962.

[B31] Kaufmann, R. H., "Some Fundamentals of Equipment-Grounding Circuit Design," *AIEE Transactions on Applications and Industry*, pt. II, vol. 73, pp. 227–232, Nov. 1954.

[B32] Meliopous, A. P., *Power System Grounding and Transients*, Marcel Dekker, Inc., 1988.

[B33] NEMA WC5-1992/ICEA S-61-402, Thermal Plastic Insulated Wire and Cable for the Transmission and Distribution of Electrical Energy.

[B34] O'Reilly, R. P., *Electrical Grounding*, Delmar Publishing, Inc., 1990.

[B35] *System Grounding for Low-voltage Power Systems*, Catalog GET-3548 (11-1975), Industrial Power System Engineering Operations, General Electric Company, Schenectady, NY 12345.

[B36] Thacker, H. B., "Grounded Versus Ungrounded Low-Voltage Alternating Current Systems," *Iron and Steel Engineer*, Apr. 1954.

[B37] Walsh, G. W., "A Review of Lightning Protection and Grounding Practices," *IEEE Transactions on Industry Applications*, vol. IA-9, no. 2, Mar./Apr. 1973.

[B38] Wiener, P. A., "Comparison of Concrete-Encased Grounding Electrodes to Driven Ground Rods," *IEEE Transactions on Industry and General Applications*, vol. IGA-6, pp. 282–287, May/June 1970.

[B39] Zastrow, O. W., "Underground Corrosion and Electrical Grounding," *IEEE Transactions on Industry and General Applications*, vol. IGA-3, pp. 237–243, May/June 1967.

--`,,`,,`-`-`,,`,,`,`,,`---

Copyright The Institute of Electrical and Electronics Engineers, Inc.
Provided by IHS under license with IEEE
No reproduction or networking permitted without license from IHS Not for Resale

This page intentionally left blank

Copyright The Institute of Electrical and Electronics Engineers, Inc.
Provided by IHS under license with IEEE
No reproduction or networking permitted without license from IHS
Not for Resale

Chapter 8
Power factor and related considerations

8.1 General scope

This chapter provides information about power factor and methods of improving power factor, including basic definitions and data which should be determined for selecting an appropriate means for power factor improvement. Necessary fundamentals are covered, including the need to determine the characteristics or linearity of circuits involved. Also included are selected references for appropriate detailed information on switching, harmonics, resonance, measurements, metering arrangements, automatic control, and protection of the device chosen for power factor improvement. High-frequency systems and series capacitors are excluded because their applications are limited in industrial systems. The fundamentals presented in this chapter are based on the assumption that the power supply voltage wave is close to sinusoidal and, therefore, the mathematical analysis of harmonics is not covered. This assumption is valid for the service to most loads in industrial service; however, with the increasing use of static power converters, the waveform might not be sinusoidal. Therefore, some of the associated problems that result from non-sinusoidal wave forms are covered in 8.14, Resonances and harmonics. Chapter 9 covers harmonics in greater detail and should be read if power factor improvement is contemplated in the presence of static power converters.

8.1.1 Significance of power factor

Maintaining a high power factor in a plant can yield direct savings. Some, such as reduced power bills and release of system capacity, are quite obvious; others, such as improved voltage and decreased I^2R losses, are less obvious but nonetheless real, as are many indirect savings as a result of more efficient performance.

The cost of improving the power factor in existing plants and of maintaining proper levels as load is added depends on the power-factor value selected and the equipment chosen to supply the compensating reactive power.

8.1.2 Emphasis on capacitors

Adding capacitors generally is the most economical way to improve the plant power factor, especially in existing plants. The greatest emphasis in this chapter will, therefore, be on capacitors and the methods of controlling the vars which they supply. Synchronous motors will be covered briefly, since there are cases in which they may prove most economical or beneficial.

Capacitors have several beneficial features, including relatively low cost, ease of installation, minimal maintenance requirements, very low losses, plus the fact that they are manufactured in a variety of sizes. Individual units also can be combined into suitable banks to obtain a large range of ratings. Thus, capacitors can be added in small or large units to meet existing

Copyright The Institute of Electrical and Electronics Engineers, Inc.
Provided by IHS under license with IEEE
No reproduction or networking permitted without license from IHS
Not for Resale

operating requirements with additional units added only when necessary to meet increased future requirements. Caution must be exercised in applying capacitors, however, as they are sensitive to overvoltage and may severely impact systems that have nonlinear loads requiring harmonic currents and/or equipment sensitive to switching transients.

8.2 Current and power flow fundamentals

Within an alternating current electric power system, there are two components of current needed to make possible the transfer of energy. One is the power component, or working portion of the current, sometimes referred to as active power. This is the component that is converted by the equipment into work, usually in the form of heat, light, or torque in rotating machines. The unit of measurement of active power is the watt (W). The second is the reactive component, or nonworking portion of the current. This reactive component is responsible for the magnetic flux surrounding the conductors and magnetizing the iron in transformers and rotating machines. Without reactive or magnetizing current, it is impossible for the power component to be transmitted through transmission and distribution systems. This magnetizing current allows energy to flow through the core of a transformer and across the air gap of an induction motor. Its unit of measurement is the var (voltampere-reactive power).

The power component is in phase with the voltage, while the reactive component is in quadrature (shifted 90°) from the voltage. The phase relationship of these two components of current to each other, to the total current, and to the system voltage, is illustrated in figure 8-1. It shows that the active current and the reactive current add vectorially to form the resultant current, which can be determined from the following expression:

$$\text{total current} I = \sqrt{(\text{active current})^2 + (\text{reactive current})^2} \tag{1a}$$

$$I = \sqrt{(I\cos\phi)^2 + (I\sin\phi)^2} \tag{1b}$$

At a given voltage V, the active, reactive, and apparent power are proportional to current shown in figure 8-1 and are related as follows:

$$\text{apparent power in voltamperes} = \sqrt{(\text{active power})^2 + (\text{reactive power})^2} \tag{2a}$$

$$|S| = |VI| = \sqrt{(VI\cos\phi)^2 + (VI\sin\phi)^2} \tag{2b}$$

$$S = VI^* = P + jQ = VI(\cos\phi + j\sin\phi) \tag{2c}$$

As evidenced when figure 8-1 is compared with figure 8-2, the phasor diagram for power is similar in form to that for current. Equations are based on fundamental frequency and assume zero harmonic current.

Copyright The Institute of Electrical and Electronics Engineers, Inc.
Provided by IHS under license with IEEE
No reproduction or networking permitted without license from IHS Not for Resale

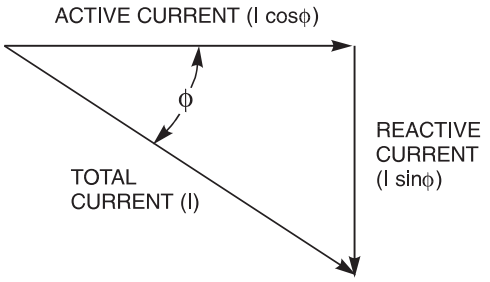

Figure 8-1—Angular relationship of current and voltage in ac circuits

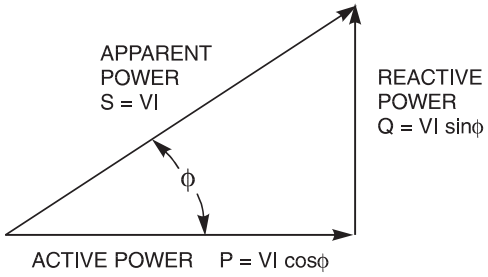

Figure 8-2—Relationship of active, reactive, and apparent power

8.2.1 Definition of power factor

Power factor is the ratio of active power (watts) to total root-mean-squared (rms) voltamperes, commonly called apparent power. It varies from one to zero, but is generally given in percentages. Active power is usually less than apparent power for one, and sometimes two, reasons. One reason is that the current wave is usually out of phase with, or "displaced," from the voltage wave at the fundamental frequency of the power system. A second reason could be that the current waveform differs from, or is "distorted" from, a sinusoidal waveform. This definition is based on the assumption that the voltage wave of a plant's power supply is a sinusoidal wave. Thus, "total" power factor is the product of two components: the displacement power factor and the distortion power factor.

Displacement power factor is the ratio of the active power of the fundamental wave, in watts, to the apparent power of the fundamental wave, in voltamperes. This is the cosine of the phase angle by which the fundamental current lags (or leads) the fundamental voltage. This displacement ratio is the power factor as indicated in metering by watthour and varhour meters, again assuming that the ac voltages are sinusoidal.

Distortion power factor is the ratio of the fundamental circuit current to the total root-mean-squared current. This ratio will be less than unity whenever there are nonlinear loads supplied by the circuit.

While displacement power factor can be improved by adding a source of vars, such as capacitors, distortion power factor can only be improved by filtering the harmonic currents that distort the fundamental current.

$$\text{total power factor} = \frac{\text{active power}}{\text{apparent power}} = \frac{\text{kW}}{\text{kVA}}$$

Copyright The Institute of Electrical and Electronics Engineers, Inc.
Provided by IHS under license with IEEE
No reproduction or networking permitted without license from IHS
Not for Resale

$$= \frac{\sqrt{3} V_L I_1 \cos\phi}{\sqrt{3} V_L I_L} \text{ for three-phase circuits}$$

$$= \frac{I_1 \cos\phi}{I_L} \tag{3}$$

where

$\cos\phi$ is the displacement power factor

$\frac{I_1}{I_L}$ is the distortion power factor

V_L is the rms value of line-to-line voltage

I_L is the rms value of line current including harmonics

I_1 is the fundamental frequency value of line current

ϕ is the angle between voltage and fundamental current

When the circuit current is not distorted, the distortion power factor will be equal to one or unity. Then the total power factor will be equal to the displacement power factor. Most of this chapter will be concerned with displacement power factor and will refer to the displacement power factor as the power factor.

$$\text{active power} = \text{apparent power} \cdot \text{power factor}$$

$$\text{kW} = (\text{kVA})(\text{pf})$$

$$= (\text{kVA})(\cos\phi) \tag{4}$$

8.2.2 Leading and lagging power factor

The power factor of any operating power system or any component of any power system may be lagging or leading (figure 8-3). The determining factor is the relationship between the directions of the active and reactive power flow. If those flows are in the same direction, the power factor at that point of reference is lagging. If either component's flow is in an opposite direction, the power factor at that point of reference is leading.

An induction motor has a lagging power factor since it requires both active and reactive power to flow into the motor (same direction). An over-excited synchronous motor has a leading power factor, as it requires active power to flow into the motor while reactive power flows from the motor into the power system (opposite direction). A generator that provides both watts of active power and vars of reactive power to the power system (same direction) is operating with a lagging power factor. Since capacitors are supplying only reactive power to a system, their power factor is always leading.

Copyright The Institute of Electrical and Electronics Engineers, Inc.
Provided by IHS under license with IEEE
No reproduction or networking permitted without license from IHS Not for Resale

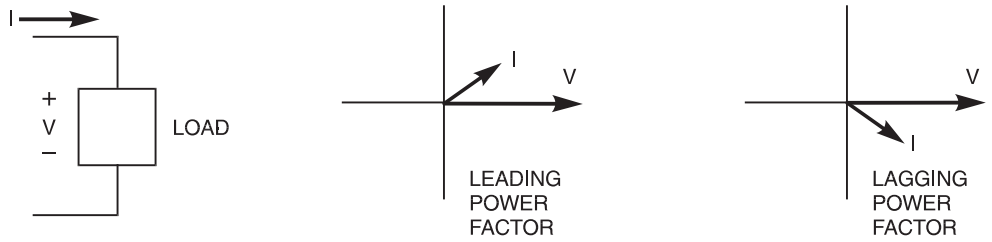

Figure 8-3—Phasor diagrams showing leading and lagging currents and power factors

8.2.3 Impact of power factor on system capability

The current that will flow in a power system is the vectorial resultant of the active or power component of current and the magnetizing or reactive component of current. It is that vectorial resultant—the "total" current—that must be dealt with in the design of electrical systems. The current-carrying portions of power system will require the capacity to carry that total current and not just the power component. This means that cable, transformers, generators, reactors, circuit breakers, fuses, and any other components in series with the load must be capable of carrying this higher total current. Also, the power loss in any circuit, I^2R, is also higher because of the flow of this resultant current.

The power component of electric current comes from energy that is expended at the power generating plant. The reactive or magnetizing component comes from two sources. The first and main source is the direct current excitation or magnetization fields in rotating generators and synchronous motors. The second source is from power capacitors. The second source is available almost anywhere and at any voltage level that capacitors can be applied to the ac system.

If much of the reactive current were furnished locally, then the utility and industrial plant's distribution systems could be more effectively utilized, since the current that they would have to carry could consist mainly of the power component. The cable, transformers, etc., could then be sized to carry a smaller magnitude of current.

8.3 Benefits of power-factor improvement

The benefits provided by power-factor improvements are from the reduction of reactive power flow in the utility and plant distribution systems. That reduction may result in the following:

a) lower utility costs if a power-factor clause is enforced or the utility charges for the kVA demand.
b) release of system electrical capacity (the system does not carry unnecessary vars).
c) voltage improvement (less reactive voltage drop).

Copyright The Institute of Electrical and Electronics Engineers, Inc.
Provided by IHS under license with IEEE
No reproduction or networking permitted without license from IHS
Not for Resale

d) lower system losses (less current).

Maximum benefits are obtained when the power factor correction is accomplished near or at the low-power-factor loads. Doing so, however, may not always be practical, particularly when the load is not linear. It is very important that power factor correction be achieved in a way that will not cause interference.

8.3.1 Utility costs

Electric utility rates for industrial and commercial facilities are usually composed of at least two components. One is the "energy rate," or the kilowatt-hour charge, which is related to the fuel that is expended in producing and delivering that energy. A second is the "demand rate," the kilowatt, or kVA demand charge. This is usually related to the capital investment that must be made to build the generation, transmission, and distribution facilities necessary to carry electrical energy to the consumer.

Since the capability of the utility's power generating and distribution system is limited by the amount of current that it might carry, the utility's ability to supply is affected by the power factor of the load. Since the reactive component of current is not registered on the kilowatthour meter, the utilities charge for low power factor by applying penalties or surcharges, or by applying demand charges on kVA, or apparent, power demand instead of kW, or active, power demand. These utility billing charges are often expensive enough to make it advantageous for the customers to improve power factor.

8.3.2 Release of system capacity

The expression, "release of capacity," means that as power factor of the system is improved, the total current flow will be reduced. This permits additional load to be served by the same system. In the event that equipment, such as transformers, cables, and generators, may be thermally overloaded, improving power factor might be the best way of reducing current flow. Also, when the power rating of a generator's prime mover corresponds to the apparent power rating of the generator, improvement of the system's power factor can release more of the generator's capacity to produce active power.

Since electrical systems and equipment are thermally limited in the amount of current they can carry, any means of reducing current flow in any system by eliminating or reducing the reactive component actually releases capacity. This released capacity allows additional load to be served by the existing system. This process of improving power factor by reducing the reactive current is a most effective means of releasing system capacity.

Various expressions for determining the amount of capacity released by power-factor improvement, along with actual examples, curves, charts, and the economics, are covered in Marbury 1949[1] and Strangland 1950. Figure 8-4 may be used to determine the capacity released.

[1]Information on references can be found in 8.16.

Copyright The Institute of Electrical and Electronics Engineers, Inc.
Provided by IHS under license with IEEE
No reproduction or networking permitted without license from IHS Not for Resale

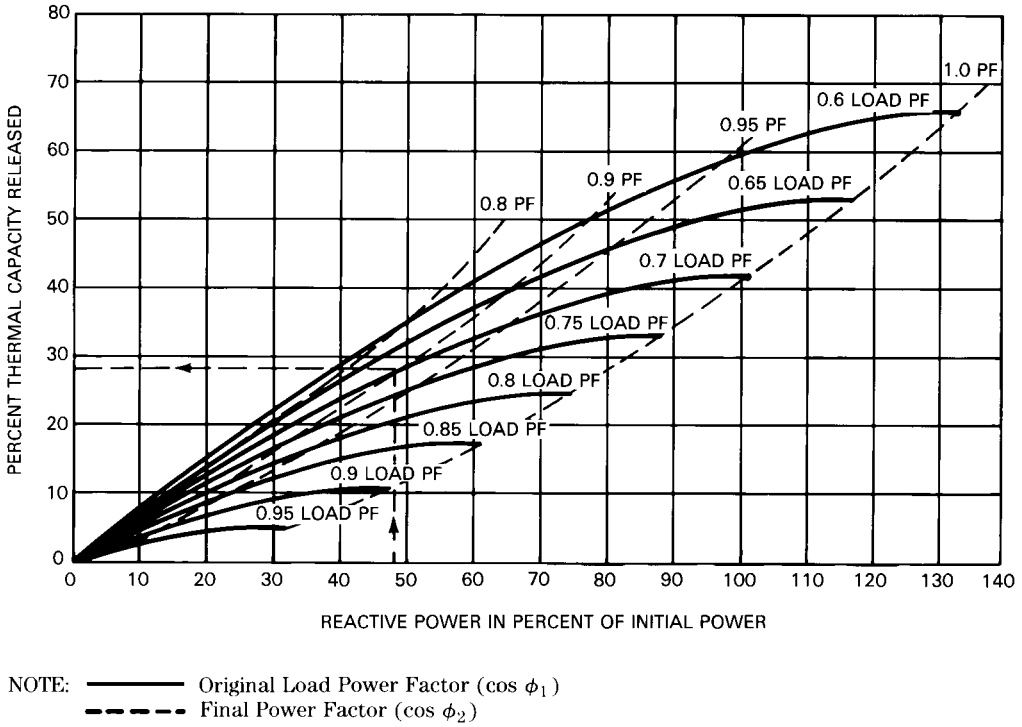

Figure 8-4—Percent capacity released and approximate combined load power factor with reactive compensation

Example. If a plant has a load of 1000 kVA at 70% power factor, and 480 kvar of capacitors are added, the system power factor increases to approximately 90%: approximately 28.5% of the electrical system's capacity is released; that is, the system has gained the ability to carry 28.5% more (70% power factor) without exceeding 1000 kVA. The final power factor of the plant load consisting of capacitors, the original load, plus the additional load, is approximately 90%.

8.3.3 Voltage improvement

Capacitors will raise a circuit's voltage; however, it is rarely economical to apply them in industrial plants for that reason alone. The voltage improvement may, therefore, be regarded as an additional benefit.

The following approximate expression shows the importance of reducing the reactive power component of current in order to reduce the voltage drop:

$$\Delta V \cong RI\cos\phi \pm XI\sin\phi \quad (5)$$

Copyright The Institute of Electrical and Electronics Engineers, Inc.
Provided by IHS under license with IEEE
No reproduction or networking permitted without license from IHS
Not for Resale

where ΔV is the voltage change, which may be a drop or rise in voltage. ΔV, R, X and I may be in absolute values with ΔV in volts, R and X in ohms, and I in amperes, or they may be in per-unit values with ΔV in per-unit volts. (Refer to Chapter 4 for an explanation of per-unit quantities.) "ϕ" is the power-factor angle, which may be from 0° to 90°. "Plus" is used when the circuit power factor is lagging and "minus" is used when it is leading. ΔV is positive (voltage drop) for a circuit having a lagging power factor and usually negative (voltage rise) for the typical industrial circuit having a leading power factor. Leading current flowing through an inductive reactance results in a voltage rise, or increase. Equation (5) may be rewritten as follows:

$$\Delta V \cong R \cdot \text{active power current} \pm X \cdot \text{reactive power current} \tag{6}$$

Perhaps the most useful form of equation (5) is

$$\Delta V \cong I(R\cos\phi \pm X\sin\phi) \tag{7}$$

where $R \cos \phi$ reflects the active power contribution to voltage drop per amperes of total current, and $X \sin \phi$ similarity reflects the reactive power contribution to voltage drop. Typically $X \sin \phi$ is many times greater than $R \cos \phi$—five to ten times greater—because circuit reactance usually is larger than circuit resistance. Thus, typically, reactive power flow produces a voltage drop magnitude that is several times greater than that produced by actual power flow. Therefore, increasing the power factor by reducing reactive flow is most effective in reducing voltage drop.

An examination of equation (6) shows that it is only necessary to know the system reactance and the capacitor rating to predict the voltage change due to the change in reactive power. Equation (6) may, therefore, be rewritten in a simple form to determine the approximate voltage change due to capacitors at a transformer secondary bus:

$$\%\Delta V = \frac{\text{capacitor kvar} \cdot \%\ \text{transformer impedance}}{\text{transformer kVA}} \tag{8}$$

The voltage increases when a capacitor is switched on and decreases when it is switched off. A capacitor permanently connected to the bus will provide a permanent boost in voltage.

Example. The percent change in voltage at the bus when the transformer is rated 1000 kVA with 6% impedance and with a capacitor bank rated 300 kvar, using equation (8), is calculated as follows:

$$\%\Delta V = \frac{300}{1000} \times 6\% = 1.8\%\ \text{voltage rise}$$

If excessive voltage becomes a problem, the transformer taps should be changed.

The voltage regulation of a system from no-load to full-load is practically unaffected by the amount of capacitors, unless the capacitors are switched; however, the addition of capacitors

Copyright The Institute of Electrical and Electronics Engineers, Inc.
Provided by IHS under license with IEEE
No reproduction or networking permitted without license from IHS Not for Resale

can raise the voltage level. The voltage rise due to capacitors in most industrial plants with modern power distribution systems and a single transformation is rarely more than a few percent.

8.3.4 Power system losses

When the reactive power component in a circuit is reduced, the total current is reduced. If the active power component does not change, as is usually the case, the power factor will improve as the reactive power component is reduced. When the reactive power component becomes zero, the power factor will be unity or 100%.

This is shown pictorially in figure 8-5(a). The load requires an active current of 80 A, but because the motor requires a reactive current of 60 A, the supply circuit must carry the vector sum of these two components, which is 100 A (80% power factor). After a var source is installed to supply the motor reactive-current requirements, the supply circuit needs to deliver only 80 A to do exactly the same amount of work. The supply circuit is now carrying only active power, so no system kVA capacity is wasted in carrying reactive power. Thus, for all practical purposes, the only way to improve the power factor is to reduce the reactive power component. This is usually done with capacitors.

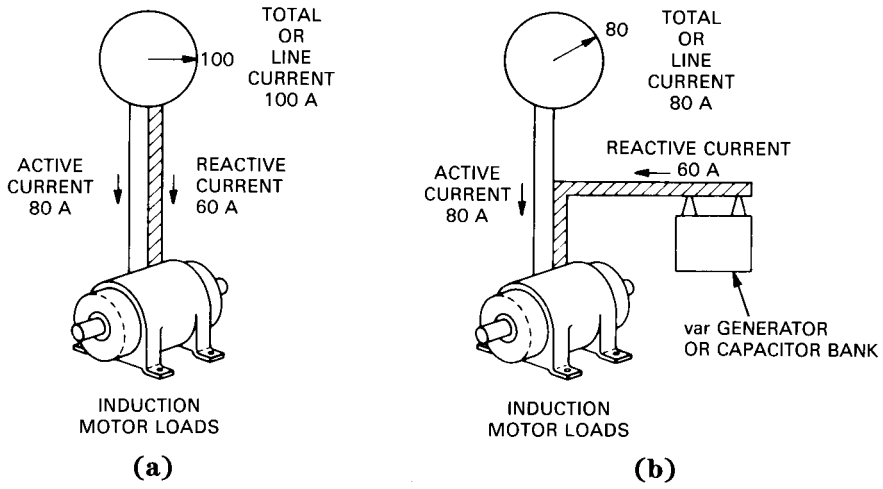

Figure 8-5—Schematic arrangement showing how capacitors reduce total line current by supplying reactive power requirements locally

Although the economic benefit from conductor I^2R loss reduction alone may not be sufficient to justify the installation of correction equipment such as capacitors, it is an additional benefit, especially in plants with long feeders that serve low power factor loads.

System conductor losses are proportional to current squared, and since current is reduced in direct proportion to power-factor improvement, the losses are inversely proportional to the

Copyright The Institute of Electrical and Electronics Engineers, Inc.
Provided by IHS under license with IEEE
No reproduction or networking permitted without license from IHS
Not for Resale

square of the power factor. These formulas are based on the assumption that the improved power factor is not leading.

$$\%\ \text{power loss approximates}\ \frac{100}{\text{pf}^2} \tag{9}$$

$$\%\ \text{loss reduction} = 100\left[1 - \left(\frac{\text{original pf}}{\text{improved pf}}\right)^2\right]$$

$$= 100\left[1 - \left(\frac{0.8}{1.00}\right)^2\right] = 36\% \tag{10}$$

that is, 36% reduction in losses.

8.4 Typical plant power factor

The unimproved power factor in plants depends on the equipment installed and the manner in which it is operated. Thus, it is difficult to accurately predict what should be expected in a new plant. The values listed in table 8-1 are drawn from operating experience gained prior to the infusion of significant amounts of improved power factor equipment. The data should, therefore, only be considered a guide.

Table 8-1—Typical unimproved power factor values

By industry	Percent power factor
Auto parts	75–80
Brewery	76–80
Cement	80–85
Chemical	65–75
Coal mine	65–80
Clothing	35–60
Electroplating	65–70
Foundry	75–80
Forge	70–80
Hospital	75–80
Machine manufacturing	60–65
Metalworking	65–70
Office building	80–90
Oil-field pumping	40–60
Paint manufacturing	55–65
Plastic	75–80
Stamping	60–70
Steelworks	65–80
Textile	65–75
Tool, die, jig	60–65

By operation	Percent power factor
Air compressor:	
External motors	75–80
Hermetic motors	50–80
Metal working:	
Arc welding	35–60
Arc welding with standard capacitors	70–80
Resistance welding	40–60
Machining	40–65
Melting:	
Arc furnace	75–90
Inductance furnace 60 Hz	100
Stamping:	
Standard speed	60–70
High speed	45–60
Spraying	60–65
Weaving:	
Individual drive	60
Multiple drive	70
Brind	70–75

Copyright The Institute of Electrical and Electronics Engineers, Inc.
Provided by IHS under license with IEEE
No reproduction or networking permitted without license from IHS Not for Resale

8.4.1 Utilization equipment

a) *Motors*. The power factor of a partly loaded induction motor is poor, as indicated in figure 8-11 in 8.9.1. This figure also shows the improvement possible over the entire load range by using a capacitor of proper rating.
Hermetic and wound-rotor type motors have a lower operating power factor than other induction motors of the same power and speed ratings.

b) *AC to dc power converters*
   1) *Diode type with no phase control*. Small single-phase units have about 50% distortion power factor at full load, while larger multiphase units may have a 95–98% power factor.
   2) *Static converter drives*. The power factor is roughly proportional to the ratio of dc output voltage to rated voltage. At partial loads, the power factor is poor. A step-by-step procedure for determining the capacitor rating required for power-factor improvement is given in [8].

c) *Electric furnaces*. Arc furnaces typically have a power factor of 70–85%, and improvement may present a system problem. Induction furnaces typically have a power factor of 30–70%; switched capacitors are used to maintain near-unity power factor.

d) *Lamps*. Incandescent lamps operate at unity power factor. Fluorescent lamps require ballasts to
   1) Provide a controlled amount of electrical energy to preheat lamp electrodes.
   2) Supply a controlled surge of high voltage and current to strike an arc between the lamp electrodes and in operating cycle.
   3) Control and limit the electrical energy to the proper values at which the lamp operates with maximum efficiency.

High power factor ballasts are those having a ratio of watts delivered to the lamp to the volt-amperes supplied of greater than 0.9. Fluorescent ballasts complying with Federal Efficiency Law 100-357 are high-power-factor ballasts. Some encased ballasts and all open ballasts are low-power-factor designs with a minimum power factor of 45%. High-intensity discharge lamps (mercury vapor, metal halide, and low-pressure sodium) using reactor and high-reactance autotransformer ballasts operate at 50% power factor unless specified as having “high power factor.” Constant wattage autotransformer (CWA) and constant wattage (CW) ballasts are inherently high power factor. High-pressure sodium lamps utilize the same type ballasts (reactor, high-reactance autotransformer, constant-wattage autotransformer) and also use a regulated lag circuit.

Electronic ballasts for fluorescent lamps are high-power-factor devices and are considered to have a minimum power factor of 90%. A controllable light output electronic ballast may have a variable power factor of 90% at minimum light output and 98% at full-light output.

e) *Transformers*. These are not ordinarily considered to be loads, but they do contribute to lowering the system power factor. The transformer exciting current is usually 1–2% of the transformer rating in kilovoltamperes and is independent of load. Reactive power is also required by the transformer leakage reactance. Such reactive power varies as the square of the load current (I^2X_L). At rated current, the leakage reactance requires reactive power equal in magnitude to the transformer rating in kilovolt-amperes times the nameplate impedance in per unit.

Copyright The Institute of Electrical and Electronics Engineers, Inc.
Provided by IHS under license with IEEE
No reproduction or networking permitted without license from IHS
Not for Resale

8.5 Instruments and measurements for power-factor studies

When power factor studies are made, sufficient data should be obtained to select the proper rating and location of capacitors or synchronous motors. If the study is for utility billing rate purposes, then the utility's bills usually furnish sufficient information to determine the capacitor rating required.

The power factor may be measured directly by indicating instruments or may be obtained from other indications, such as kilowatt, kilovoltampere, or kilovar readings. Average values may be obtained from the integrated kilowatthour, kilovarhour, or kilovoltamperehour readings.

$$\text{power factor in } \% = \frac{\text{kW}}{\text{kVA}} \cdot 100$$

$$or \cos \tan^{-1} \frac{\text{kvar}}{\text{kW}} \cdot 100$$

$$or \cos \tan^{-1} \frac{\text{kvarh}}{\text{kWh}} \cdot 100$$

Measurements by recording or graphic instruments are most useful since they provide a permanent record. Indicating instruments are satisfactory for spot checking individual feeder circuits or loads. They can also be used in place of recording instruments if readings are taken at frequent intervals. Note should be taken that most panel-mounted power factor meters measure only one phase at a time.

The preferred measurements are power in kilowatts, current in amperes, and voltage in volts, from which the apparent power in kilovoltamperes and the power factor can be calculated. Voltage readings are especially useful if automatic capacitor control with a voltage-responsive master element is planned. Direct measurement of the power factor may be misleading; for example, even at 95% power factor, the reactive power component (in kilovars) of the load is 31% of the active power component (in kilowatts).

When a portable power-factor instrument is used, it is typically a polyphase instrument. Even then, power-factor readings are accurate only on balanced loads, and become increasingly inaccurate as the load unbalance increases. Non-sinusoidal waveforms also affect the accuracy of these instruments. For metering arrangement and connection diagrams, refer to Chapter 11.

Switchboard meters may be provided for individual loads. Readings from such instruments often disclose great variations in the power factor between different sections in a plant. Such knowledge can be valuable in placing equipment for power-factor improvement to best advantage.

Copyright The Institute of Electrical and Electronics Engineers, Inc.
Provided by IHS under license with IEEE
No reproduction or networking permitted without license from IHS Not for Resale

8.6 Techniques to improve the power factor

The power factor of a given power system or load is improved by reducing the var demand which that system or load places upon its electrical source. This can be accomplished either by supplying the vars locally from capacitors or synchronous motors, controlling (reducing) the need for vars by static controllers, or by de-energizing idling motors and unloaded transformers.

It is the overall impact on the system that should be considered when attempting to improve the power factor of equipment. An example that only shifts the need for vars involves the application of static power factor controllers. These controllers modulate the voltage applied to a motor so as to provide soft-start capability in applications requiring reduced voltage starting, or when starting shock-sensitive loads. In addition, these controllers maintain a constant phase angle relationship between motor voltage and current, thereby improving the power factor (and efficiency) of the motor when operating at *less than* full load. The overall *system* power factor, however, is never improved, since any reduction in vars at the motor is more than nullified by the additional system vars required by the phase-shifting action of the controller as it modulates motor voltage.

The concept of a capacitor as a kilovar generator is helpful in understanding its use for power-factor improvement. A capacitor may be considered a kilovar generator because it supplies the magnetizing requirement (kilovars) to induction devices. This action may be explained in terms of the energy stored in capacitors and induction devices. As the voltage in ac circuits varies sinusoidally, it alternately passes through zero-voltage points and maximum-voltage points. As the voltage passes through zero voltage and starts toward maximum voltage the capacitor stores energy in its electrostatic field, and the induction device gives up energy from its electromagnetic field. As the voltage passes through a maximum point and starts to decrease, the capacitor gives up energy and the induction device stores energy. Thus, when a capacitor and an induction device are installed on the same circuit, there will be an exchange of magnetizing current between them, with the capacitor actually supplying the magnetizing requirements of the induction device. The capacitor thus releases the supply line from the need to supply magnetizing current.

8.6.1 Methods of controlling vars using capacitors

Power capacitors are an inexpensive source of reactive power (vars). The amount of vars supplied by the capacitors are in proportion to the square of the applied voltage as follows:

$$\text{vars} = \frac{V^2}{X_c} = 2\pi f C V^2$$

Care must be used in applying capacitors to meet reactive power needs, since they can have varying effects upon the operating voltage. System voltage will drop or rise respectively with an increase or decrease in plant var loadings (8.3.3). This voltage increase is rarely a problem, amounting to less than a change in a transformer tap. Should regulating the reactive supply be necessary, however, some method of controlling the vars supplied by the capacitors

Copyright The Institute of Electrical and Electronics Engineers, Inc.
Provided by IHS under license with IEEE
No reproduction or networking permitted without license from IHS
Not for Resale

must be used. Since the switching of capacitors may cause severe problems within plants, capacitors should not be switched any more than necessary.

Four methods of controlling vars using capacitors, in order of complexity, are the following:

— Switching capacitors matched to a motor by using the motor's controller.
— Switching capacitors in one or more groups using contactors, power circuit breakers, or vacuum switches (figure 8-6).
— Back-to-back phase control thyristor switching of a reactor in parallel with the capacitor bank (static var compensation, "SVC") (figure 8-7).
— Back-to-back thyristor switching of capacitors that will turn on or off at current zero (figure 8-8).

8.6.1.1 Motor terminal application of capacitors

Power factor improvement of induction motor loads by means of shunt capacitors at the motor terminals is well known, having been an ideal example of locating reactive supply as close as possible to the lagging load. The main advantage is that it also utilizes the motor contactor to switch the capacitors and the motor together as a unit so that the capacitors are on the system only when required. On systems that do not include power converters and have few motors, the application can work well since the kvar requirements in an induction motor are nearly constant across the motor's range of load (see figure 8-11 in 8.9.1). Therefore, power factor correction matched to the motor results in a higher power factor at all values of motor loading. Not all motor drives are candidates for capacitors, however, and judgment must be used in choosing the amount of reactive supply applied and how that supply is connected. This type of application is covered in 8.9.

This application, however, is no longer viewed as an optimum means of improving system power factor. Section 14.43.4 of NEMA MG 1-1993, in fact, states the following:

> For power distribution systems which have several motors connected to a bus, power capacitors connected to the bus rather than switched with individual motors are recommended to minimize the potential combinations of capacitance and inductance, and to simplify the application of any tuning filters that may be required.

Where several motors are involved and/or devices that draw harmonic currents are present, it is much better practice to connect a single bank of capacitors to the bus. Again quoting from NEMA MG 1-1993, Section 14.43.4,

> The proper application of power capacitors to a bus with harmonic currents requires an analysis of the power system to avoid potential harmonic resonance of the power capacitors in combination with transformer and circuit inductance.

Copyright The Institute of Electrical and Electronics Engineers, Inc.
Provided by IHS under license with IEEE
No reproduction or networking permitted without license from IHS Not for Resale

8.6.1.2 Switching power capacitors by contactor, circuit breaker, or vacuum switch

The control of reactive power on a continuous basis would require a switching device that can be operated very often and have the ability to interrupt at current zero with a high voltage across the contacts without re-ignition. Because these are demanding requirements, this method is used only for switching larger banks once or twice a day when a demand changes from normal to light load conditions. The switching device has the special requirements of interrupting a current that leads the voltage by 90°. Where the switching limitations are not an operating disadvantage, this method of controlling vars, as represented in figure 8-6, is most economical.

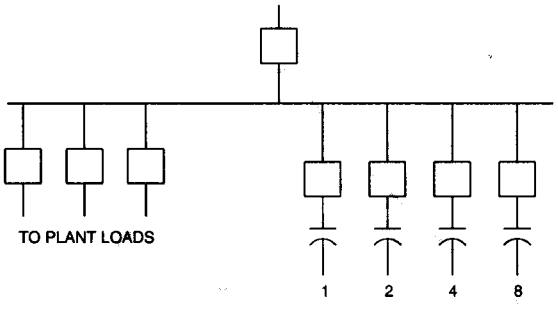

Figure 8-6—Capacitors switched in binary values

8.6.1.3 Back-to-back phase-control thyristor switching of a reactor

Back-to-back phase-control thyristor switching of a reactor in parallel with capacitors has the advantage of smooth var control over the range of the equipment. By switching the current to the reactor instead of a capacitor, the problems of switching a leading current are avoided. The thyristor switching of a balanced three-phase load does cause fifth, seventh, etc., harmonic currents, however, so the capacitors may be divided into several sections with tuning reactors to filter these harmonics. The reactor's var rating normally is equal to the capacitor rating in order to get full control of the var supply. More capacitors can be applied if a set amount of vars is always needed on the system. This system commonly is known as the *static var control*, and basically provides a low-impedance path to offset the capacitors' var outputs when they are not needed. This system, as represented in figure 8-7, can control vars on an individual phase basis (single phase) and is used to compensate electric arc-furnace loads.

8.6.1.4 Back-to-back thyristor switching of capacitors at zero current

Back-to-back thyristor switching of capacitors at zero current leaves the capacitor charged with either a positive or negative full charge on the capacitor. The thyristor's fine control allows the switching on of the capacitor when the system voltage equals the charged capacitor voltage. This eliminates any transients on the system. However, this equipment, as illustrated in figure 8-8, has limited application because of its complications and cost.

Copyright The Institute of Electrical and Electronics Engineers, Inc.
Provided by IHS under license with IEEE
No reproduction or networking permitted without license from IHS
Not for Resale

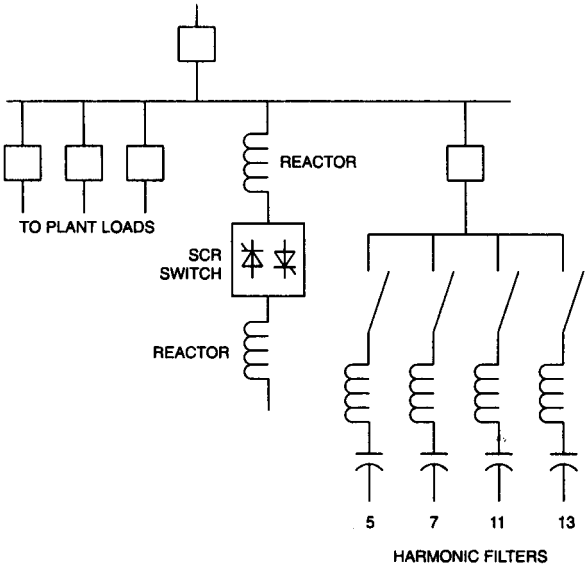

Figure 8-7—Static var control

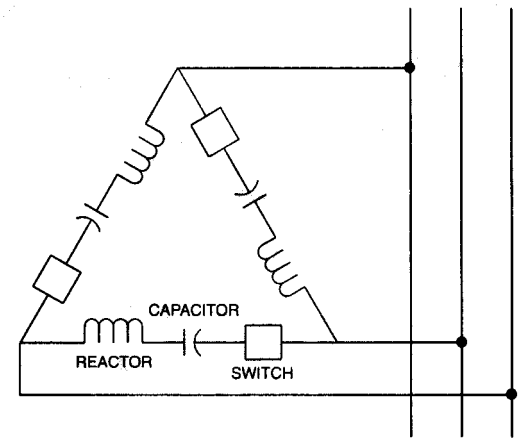

Figure 8-8—Three-phase diagram of one-bank capacitors switched by thyristors

8.6.1.5 Comparison of different types of static var supplies

Of the four methods mentioned in controlling the amount of vars from capacitor banks into the power system, only three should be considered. The first two, where banks are switched by motor controllers, circuit breakers, or load switches, are the most inexpensive method and can be used for controlling the average vars over a long period of time. For instance, if during the week two shifts a day were operating in the plant, this method could be used to disconnect some of the capacitors during the period when the plant was at light load. This method should

Copyright The Institute of Electrical and Electronics Engineers, Inc.
Provided by IHS under license with IEEE
No reproduction or networking permitted without license from IHS Not for Resale

not be used for switching the capacitors on and off more than a few times per day, because of the transient voltages associated with capacitor switching.

The static var control method with the thyristor switch on the reactor is the most practical way of continuously regulating the voltage or var flow in the power system. It has the advantage of being able to do this on a single-phase basis; therefore, static var control is a unique method of reducing the effects of variable loads such as arc furnaces or resistance welding. At the present time this equipment has been available for large blocks of vars, 15 Mvar and above. Smaller systems can be economical down to 1.5–10 Mvar.

8.6.2 Synchronous motors

Synchronous motors also are used for power-factor improvement. The reactive power output that they are capable of supplying to the line is a function of excitation and motor load. The curves of figure 8-9 show the reactive power that a typical synchronous motor is capable of delivering under various load conditions with normal excitation. For example, an 0.8 power factor (leading) synchronous motor can supply reactive power equivalent to 60% of its horsepower rating at 100% load, but will supply reactive power up to 75% of its horsepower rating if the motor is loaded to only 20% of its horsepower rating. At overloads the motor requires more excitation, so less reactive power is available to the system.

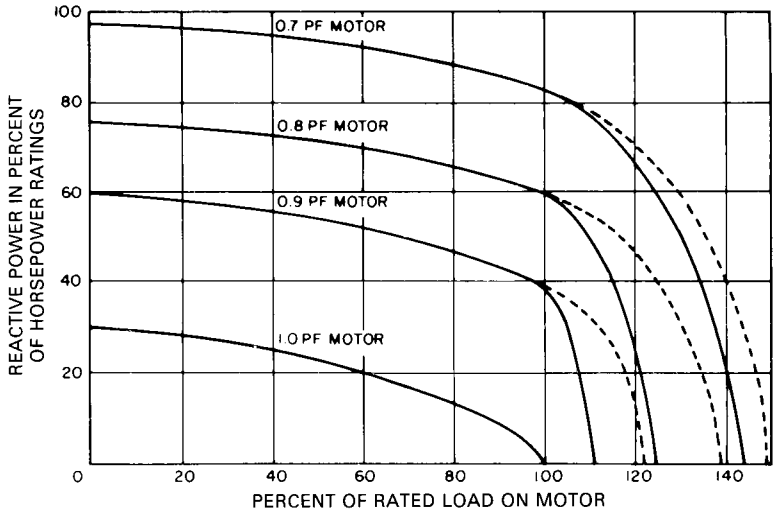

NOTE: Solid lines are based on reduction in excitation at overload to maintain rated full-load current; dashed lines represent rated excitation to maintain rated pullout torque.

Figure 8-9—Leading reactive power in percent of motor horsepower ratings for synchronous motors at part load and at various power-factor ratings

Copyright The Institute of Electrical and Electronics Engineers, Inc.
Provided by IHS under license with IEEE
No reproduction or networking permitted without license from IHS
Not for Resale

8.6.3 Induction versus synchronous motors

Induction motors with capacitors are usually more economical than synchronous motors alone. However, since synchronous motors can be applicable for slow-speed drives, at times the type of drive will dictate the use of one type of motor over another. When a choice is available, an economic comparison should be made.

Typically, synchronous motors used for system power-factor improvement are of the 0.8 leading power-factor type, because the incremental cost of the reactive power produced is low. In order to obtain the net equivalent reactive output of an 0.8 power-factor synchronous motor, it would be necessary to install capacitors equal to approximately 1.12 times the horsepower rating of an induction motor of the same horsepower rating.

For induction-motor applications of up to 500 hp, it will be found necessary to add approximately 1.1–1.2 kvar of capacitors per hp to make the combination comparable to an 0.8 power-factor synchronous-motor application.

A separate switching device should be included in the cost comparisons where the capacitors cannot be switched by the motor controller.

The equipment comparisons should include a synchronous motor plus a starter (controller), an exciter, and a factor for its operating costs; versus an induction motor plus a starter (controller), capacitors, separate capacitor switching devices when needed, plus a factor for operating costs. In this comparison, the capacitor-induction-motor combination has the advantage of lower maintenance.

8.7 Calculation methods for improving power factor

From the right-triangle relationship of figure 8-1, several simple and useful mathematical expressions may be written:

$$\cos\phi = \frac{\text{active power}}{\text{apparent power}} = \frac{\text{kW}}{\text{kVA}} \tag{11}$$

$$\tan\phi = \frac{\text{reactive power}}{\text{active power}} = \frac{\text{kvar}}{\text{W}} \tag{12}$$

$$\sin\phi = \frac{\text{reactive power}}{\text{aparent power}} = \frac{\text{kvar}}{\text{kVA}} \tag{13}$$

Assuming, for purposes of calculation, that the active power component remains constant, and the apparent power and reactive power components would change with the power factor, the expression involving the active power component is the most convenient to use. This expression may be rewritten as

$$\text{reactive power} = \text{active power} \cdot \tan\phi \tag{4a}$$

Copyright The Institute of Electrical and Electronics Engineers, Inc.
Provided by IHS under license with IEEE
No reproduction or networking permitted without license from IHS Not for Resale

$$\text{kvar} = (\text{kW})(\tan\phi) \tag{4b}$$

where the value of tan ϕ corresponds to the power factor angle (ϕ).

For example, assume that it is necessary to determine the capacitor rating to improve the load power factor:

$$\text{reactive power at original power factor} = \text{active power} \cdot \tan\phi_1$$

$$= (\text{kW})(\tan\phi_1) \tag{5}$$

$$\text{reactive power at improved power factor} = \text{active power} \cdot \tan\phi_2$$

$$= (\text{kW})(\tan\phi_2) \tag{6}$$

where ϕ_1 is the angle of the original power factor and ϕ_2 is the angle of the improved power factor. Therefore, the capacitor rating required to improve the power factor is

$$\text{reactive power kvar} = \text{active power} \cdot (\tan\phi_1 - \tan\phi_2) \tag{7a}$$

$$\text{kvar} = (\text{kW})(\tan\phi_1 - \tan\phi_2) \tag{7b}$$

For simplification, $(\tan\phi_1) - (\tan\phi_2)$ is often written as $\Delta\tan$. Therefore,

$$\text{reactive power} = \text{active power} \cdot \Delta\tan \tag{18a}$$

$$\text{kvar} = (\text{kW})(\Delta\tan) \tag{18b}$$

All tables, charts, and curves that have a kW multiplier for determining the reactive power requirements are based on equation (18a) and (18b) (see table 8-2).

Example. Using table 8-2, find the capacitor rating required to improve the power factor of a 500 kW load from 0.76 to 0.93:

$$\begin{aligned}\text{kvar} &= \text{kW} \cdot \text{multiplier}\\ &= 500 \cdot 0.46\\ &= 230\end{aligned}$$

8.8 Location of reactive power supply

The benefits derived by installing capacitors, synchronous machines, or any other means for power-factor improvement result from the reduction of reactive power flow in the system. Capacitors and synchronous machines should, therefore, be installed as close as possible to the load for which the power factor is being improved. However, it is sometimes difficult to keep low-voltage capacitors on line, since the overcurrent device will trip if they resonate. Therefore, it is advisable to group capacitors where they are, or can be, isolated from harmonic currents. Figure 8-10 shows four common capacitor locations.

Copyright The Institute of Electrical and Electronics Engineers, Inc.
Provided by IHS under license with IEEE
No reproduction or networking permitted without license from IHS
Not for Resale

Table 8-2—Power factor improvement kvar table

Original power factor	Desired power factor in percent																				
	0.80	0.81	0.82	0.83	0.84	0.85	0.86	0.87	0.88	0.89	0.90	0.91	0.92	0.93	0.94	0.95	0.96	0.97	0.98	0.99	1.0
0.50	0.982	1.008	1.034	1.060	1.086	1.112	1.139	1.165	1.192	1.220	1.248	1.276	1.306	1.337	1.369	1.403	1.440	1.481	1.529	1.589	1.732
0.52	0.893	0.919	0.945	0.971	0.997	1.023	1.050	1.076	1.103	1.131	1.159	1.187	1.217	1.248	1.280	1.314	1.351	1.392	1.440	1.500	1.643
0.54	0.809	0.835	0.861	0.887	0.913	0.939	0.966	0.992	1.019	1.047	1.075	1.103	1.133	1.164	1.196	1.230	1.267	1.308	1.356	1.416	1.559
0.56	0.730	0.756	0.782	0.808	0.834	0.860	0.887	0.913	0.940	0.968	0.996	1.024	1.054	1.085	1.117	1.151	1.188	1.229	1.277	1.337	1.480
0.58	0.655	0.681	0.707	0.733	0.759	0.785	0.812	0.838	0.865	0.893	0.921	0.949	0.979	1.010	1.042	1.076	1.113	1.154	1.202	1.262	1.405
0.60	0.583	0.609	0.635	0.661	0.687	0.713	0.740	0.766	0.793	0.821	0.840	0.877	0.907	0.938	0.970	1.004	1.041	1.082	1.130	1.190	1.333
0.62	0.516	0.542	0.568	0.594	0.620	0.646	0.673	0.699	0.726	0.754	0.782	0.810	0.840	0.871	0.903	0.937	0.974	1.015	1.063	1.123	1.266
0.64	0.451	0.474	0.503	0.529	0.555	0.581	0.608	0.634	0.661	0.689	0.717	0.745	0.775	0.806	0.838	0.872	0.909	0.950	0.998	1.068	1.201
0.66	0.388	0.414	0.440	0.466	0.492	0.518	0.545	0.571	0.598	0.626	0.654	0.682	0.712	0.743	0.775	0.809	0.846	0.887	0.935	0.995	1.138
0.68	0.328	0.354	0.380	0.406	0.432	0.458	0.485	0.511	0.538	0.566	0.594	0.622	0.652	0.683	0.715	0.749	0.786	0.827	0.875	0.935	1.078
0.70	0.270	0.296	0.322	0.348	0.374	0.400	0.427	0.453	0.480	0.508	0.536	0.564	0.594	0.625	0.657	0.691	0.728	0.769	0.817	0.877	1.020
0.72	0.214	0.240	0.266	0.292	0.318	0.344	0.371	0.397	0.424	0.452	0.480	0.508	0.538	0.569	0.601	0.635	0.672	0.713	0.761	0.821	0.964
0.74	0.159	0.185	0.211	0.237	0.263	0.289	0.316	0.342	0.369	0.397	0.425	0.453	0.483	0.514	0.546	0.580	0.617	0.658	0.706	0.766	0.909
0.76	0.105	0.131	0.157	0.183	0.209	0.235	0.262	0.288	0.315	0.343	0.371	0.399	0.429	0.460	0.492	0.526	0.563	0.604	0.652	0.712	0.855
0.78	0.052	0.078	0.104	0.130	0.156	0.182	0.209	0.235	0.262	0.290	0.318	0.346	0.376	0.407	0.439	0.473	0.510	0.551	0.599	0.659	0.802
0.80	0.000	0.026	0.052	0.078	0.104	0.130	0.157	0.183	0.210	0.238	0.266	0.294	0.324	0.355	0.387	0.421	0.458	0.499	0.547	0.609	0.750
0.82			0.000	0.026	0.052	0.078	0.105	0.131	0.158	0.186	0.214	0.242	0.272	0.303	0.335	0.369	0.406	0.447	0.495	0.555	0.698
0.84					0.000	0.026	0.053	0.079	0.106	0.134	0.162	0.190	0.220	0.251	0.283	0.317	0354	0.395	0.443	0.503	0.646
0.86							0.000	0.026	0.053	0.081	0.109	0.137	0.167	0.198	0.230	0.264	0.301	0.342	0.390	0.450	0.593
0.88									0.000	0.028	0.056	0.084	0.114	0.145	0.177	0.211	0.248	0.289	0.337	0.397	0.540
0.90											0.000	0.028	0.058	0.089	0.121	0.155	0.192	0.233	0.281	0.341	0.484
0.92													0.000	0.031	0.063	0.097	0.134	0.175	0.223	0.283	0.426
0.94															0.000	0.034	0.071	0.112	0.160	0.220	0.363
0.96																	0.000	0.041	0.089	0.149	0.292
0.98																			0.000	0.060	0.203

There is a wide range of capacitors to select from, with variations existing in available kvar rating, voltage, insulation ratings, and in the availability of single-phase and three-phase unit designs. Economics also should be considered when determining the capacitor location. The cost per kvar of medium-voltage capacitors is significantly less than the low-voltage type, but this advantage is offset by the cost of the medium-voltage switching device which is required for the higher voltage bank. The cost of the switching device, where required, should be included in the cost comparison

The economics of purchasing, installing, protecting, and controlling a single large bank, and the ability to gain isolation from sources of harmonic currents, can tilt the decision toward a main bus location. Large plants with extensive primary distribution systems often install capacitors at the primary voltage bus at location C4 when utility billing encourages the user to improve power factor. The combination of system needs, system configuration, operational requirements, including the need to control harmonic voltages and current, plus the cost of purchasing and installing the equipment, all will influence the selection of the bank location.

8.9 Capacitors with induction motors

Connecting capacitors with dispersed motors is no longer viewed as the optimum means of correcting power factor. The reason is that they may interreact with sources of harmonic currents, and economics may not favor the individual motor-capacitor method because of a

Copyright The Institute of Electrical and Electronics Engineers, Inc.
Provided by IHS under license with IEEE
No reproduction or networking permitted without license from IHS
Not for Resale

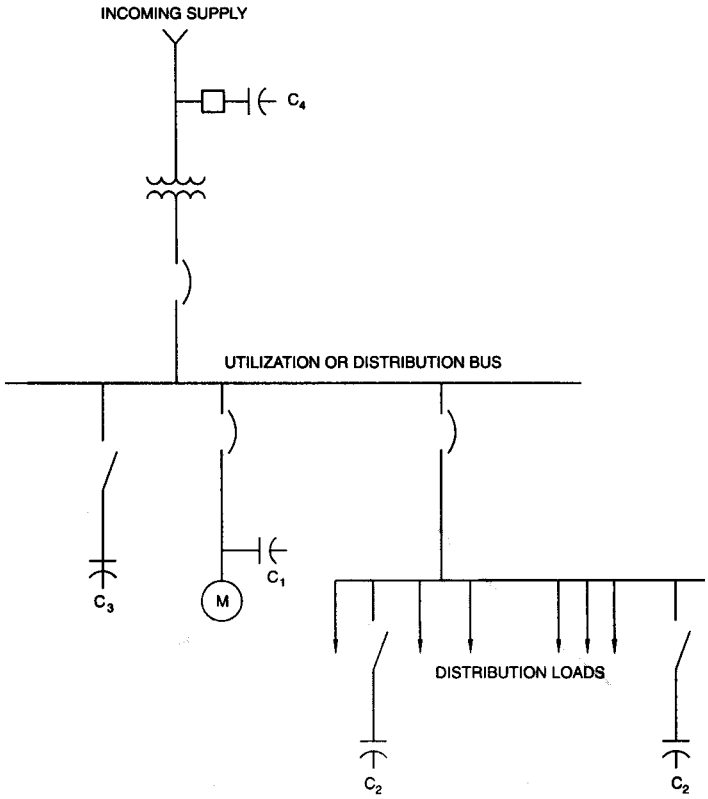

Figure 8-10—Possible shunt capacitor locations

diversity among motors in operation and the higher unit cost of capacitors in small ratings. This method still might be considered, however, because of its operational advantages when connected to appropriate motors. It unloads distribution facilities, and it assures that the capacitors are always on the line when (and only when) the motor is energized and, therefore, when the power-factor improvement is needed. Connecting capacitors ahead of individual motors as shown in location C_1 not only improves power factor at the load, but also permits switching the capacitor and motor as a unit. Engineering analysis is recommended to determine whether there is a potential for these distributed capacitors to resonate when the plant has, or may install, static power equipment.

8.9.1 Effectiveness of motor-capacitor method

The power factor of a squirrel-cage motor at full load is usually between 80% and 90%, depending upon the motor speed and type of motor. At light loads, however, the power factor drops rapidly, as illustrated in figure 8-11. Generally, induction motors do not operate at full load (often the drive is over-motored), and consequently they have low operating power factors. Even though the power factor of an induction motor varies significantly from no-load to full-load, the motor reactive power does not change very much. This characteristic makes the

Copyright The Institute of Electrical and Electronics Engineers, Inc.
Provided by IHS under license with IEEE
No reproduction or networking permitted without license from IHS
Not for Resale

squirrel-cage motor a particularly useful application for capacitors. With a properly selected capacitor, the operating power factor is excellent over the entire load range of the motor, as shown in figure 8-11. It is generally in excess of 95% at full load and higher at partial loads.

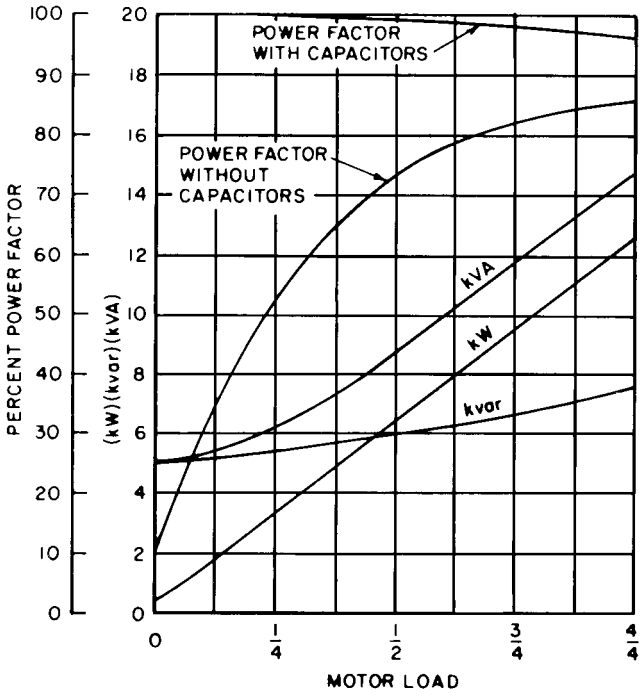

Figure 8-11—Motor characteristics for typical medium-sized and medium-speed induction motor

8.9.2 Selection of motors and connection point

In selecting a motor for a terminal capacitor application, the following procedures should be considered:

a) Select a motor that has long hours of use so that the capacitor has a high duty factor and is likely to be in the line at time of peak load.
b) Choose large motors and slower-speed motors. The slower the speed, the larger the capacitor values that can be used.

Note that hermetic motors are built with a minimum of copper and iron and have quite different characteristics from standard motors. The power factor of this type motor is such that it is not unusual for no-load current to be about half the full-load value. Therefore, capacitor ratings are larger than for NEMA Design B motors (see NEMA MG 1-1993).

Copyright The Institute of Electrical and Electronics Engineers, Inc.
Provided by IHS under license with IEEE
No reproduction or networking permitted without license from IHS
Not for Resale

c) Never connect the capacitors directly to the motor when
   1) Solid-state starters are used
   2) Open-transition starting is used
   3) The motor is subject to repetitive switching, jogging, inching, or plugging
   4) A multi-speed motor is used
   5) A reversing motor is used
   6) A high-inertia load may drive the motor

In all these cases, self-excitation voltages or peak transient currents can cause damage to the capacitor and motor. In these types of installations, the capacitors should be switched with a contactor interlocked with the motor starter (see Andreas 1982).

Preferred connections for the terminal capacitors are illustrated schematically in figure 8-12, with (a) being considered the ideal connection and (b) the second choice. When the capacitor is placed between the motor running overcurrent protection (motor overload relay heater coil) and the motor, less current will flow through the overload relay and the motor running overcurrent heater coil will have to be changed to compensate for the reduced current to the motor due to the addition of the capacitor.

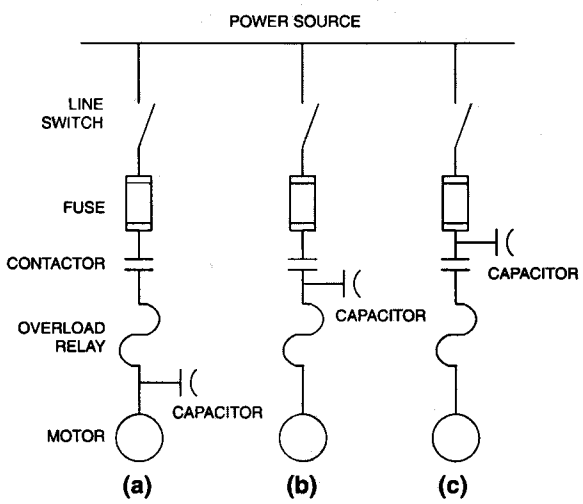

Figure 8-12—Electrical location of capacitors when used with induction motors for power factor improvement

8.9.3 Limitations of capacitor-motor switching

Experience has shown that difficulties may be encountered when capacitors are applied to induction motors and switched with the motor as a unit. The factors that limit the value of capacitors to be switched with a motor are as follows:

1) Presence of harmonic currents
2) Overvoltage due to self-excitation
3) Excessive inrush current and transient torque due to out-of-phase reclosing

Copyright The Institute of Electrical and Electronics Engineers, Inc.
Provided by IHS under license with IEEE
No reproduction or networking permitted without license from IHS
Not for Resale

These limitations apply when the capacitor is connected to the load side of the motor starter as shown in figure 8-12 (a) and (b), and the capacitor and motor are switched as a unit.

8.9.3.1 Harmonic resonance

Subclause 8.6.1.1 concerns the application of capacitors with motors where the potential for harmonic currents exists.

8.9.3.2 Self-excitation considerations

The magnetizing requirement of an induction motor can vary significantly with the design. Premium higher efficiency induction motor designs operate less saturated than previous U- or T-frame designs, so they require less capacitance to improve the power factor. Using the same value of capacitors on certain ratings of these high-efficiency motors as recommended for a U- or T-frame design can overvoltage the motor significantly. Therefore, traditional capacitor sizing tables do not apply for these new motors. Refer to the motor manufacturer for capacitor size recommendations.

The two saturation curves shown in figure 8-13 (a) and (b) describe the vast differences that can exist between motor designs. Note that for the extreme case and rating plotted, the magnetizing power for the higher efficiency motor design is only 6 kvar versus 14.4 kvar for the standard design. Thoughtful examination of the curves reveals what would happen to the motor (and capacitor) terminal voltage if switched together and, after steady-state operation with no load on the motor is established, the switching device opens. The motor is running at nearly synchronous speed and, therefore, prior to slowing down as a result of friction and windage losses, operates as a generator producing power at (nearly) the frequency of the system, that is, 60 Hz. The intersection of the (60 Hz) motor magnetizing curve and the straight line representing the capacitor (60 Hz) current/voltage characteristic then determines the approximate terminal voltage after switch opening.

The motor/capacitor network, with stored electrical and mechanical energy, will circulate a current between the motor and the capacitor that corresponds to their terminal voltage. In this manner such a network is said to *self-excite*.

With a properly sized capacitor providing just the necessary magnetizing power for either motor [figure 8-13 (a) or (b)], the self-excitation terminal voltage for such a switching condition is 460 V, as we would expect. If, on the other hand, we had applied the same size capacitor for the motor of figure 8-13 (b) as was required for the motor of figure 8-13 (a) (14.4 kvar), the resulting terminal voltage after switching would have been 680 V—clearly excessive.

A similar overvoltage situation would have occurred for the (standard) motor in figure 8-13 (a) had a more lenient criterion been used for sizing the capacitor for this machine, as is frequently done. However, the voltage level would have been less severe due to the flatter magnetization characteristic. Also, a comparison of the magnetization characteristics for older pre-U-frame and U-frame motors with the saturation curve for T-frame motors would, in general, yield discovery of a similar, although less severe, performance relationship.

Copyright The Institute of Electrical and Electronics Engineers, Inc.
Provided by IHS under license with IEEE
No reproduction or networking permitted without license from IHS Not for Resale

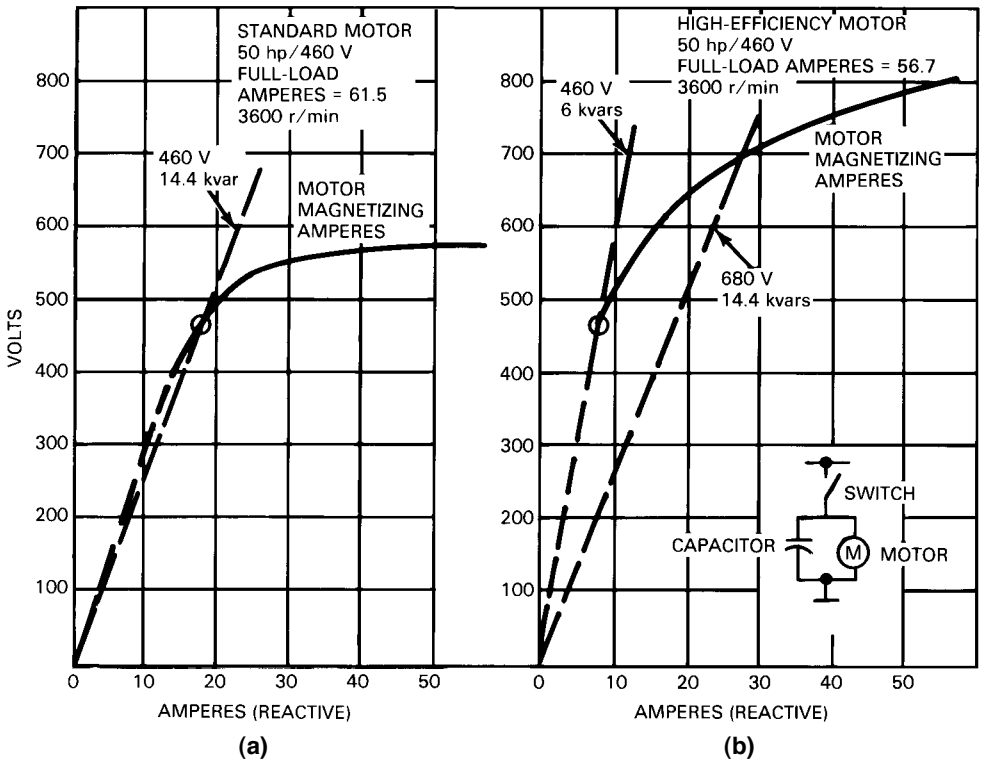

NOTE: kvar values indicated are for a specific rating from a single manufacturer; this represents an extreme case.

Figure 8-13—Typical motor saturation characteristic for standard and high-efficiency motors

In actual practice, the self-excitation overvoltage problem is not as serious as suggested, due to losses in the electric system and the sudden slowing of the motor that occurs as a result of mechanical shaft load. Unless supported by other facts such as information from the motor manufacturer, it is not advisable to apply a capacitor larger than that required to supply the motor's no-load magnetizing current.

8.9.3.3 Inrush current due to out-of-phase reclosing

The possibility exists for motors to be damaged if out-of-phase reclosing occurs while a substantial level of voltage remains on the motor's terminals. Out-of-phase reclosing can result in severe inrush currents and transient torques. Damage is usually prevented by reclosing after the motor's residual voltage has dropped to a lower level. Experience has indicated that motor voltages of 25% are normally low enough to avoid excessive currents and torques.

Copyright The Institute of Electrical and Electronics Engineers, Inc.
Provided by IHS under license with IEEE
No reproduction or networking permitted without license from IHS
Not for Resale

The time required for the motor's voltage to decay to a safe reclosing level can, however, be significantly lengthened when capacitors are switched with the motor. By inter-reacting with the motor's inductance, the capacitors can help sustain the motor's voltage and, thus, substantially increase its time constant. The effect of the slower decay of voltage may have harmful effects unless reclosing is delayed until the voltage has dropped.

Example. A 700 hp, 4000 V, 900 r/min motor had an open-circuit time constant of 0.675 s. With the power capacitor rating of 155 kvar, the new time constant was 4.45 s. The time for the residual voltage to decay to 25%, a commonly accepted safe value before reconnection to the power source, was about 6 s. Thus, this fact becomes important in high-inertia drives and fast reclosing switching (see Demello and Walsh 1961).

The maximum symmetrical rms current for which induction motor windings are normally braced is

$$I_M = \frac{\text{rated voltage}}{X''}$$

where all values are expressed in per unit on the rated machine base. For squirrel cage induction motors, the reactance X'' is defined as that associated with locked rotor. A readily applicable means of checking maximum current magnitudes that may result from out-of-phase reclosing is illustrated in a simple general equivalent circuit of figure 8-14.

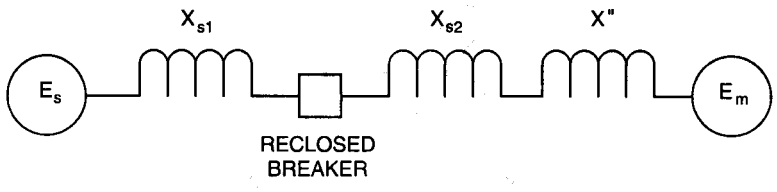

$X_s = X_{s1} + X_{s2}$ = TOTAL SYSTEM REACTANCE BETWEEN EQUIVALENT SUPPLY VOLTAGE E_s AND TERMINALS OF MACHINE (WITH REACTANCE OF X" AND EQUIVALENT DRIVING VOLTAGE E_m).

Figure 8-14—Equivalent circuit of simple system showing quantities that control transient currents upon circuit breaker reclosure

The E_s or industrial system side is assumed to maintain its voltage, while the motor voltage E_m will decay at some rate depending upon factors, such as machine time constants and load inertia.

If the recloser-controlled circuit breaker is closed without regard for phase relationship of the two driving voltages, it is possible for the voltages E_s and E_m to be 180° out of phase, produc-

Copyright The Institute of Electrical and Electronics Engineers, Inc.
Provided by IHS under license with IEEE
No reproduction or networking permitted without license from IHS Not for Resale

ing a net single driving voltage equal to the arithmetical sum of their magnitudes. The maximum transfer symmetrical current between the systems would then be

$$I = \frac{E_s + E_m}{X_s + X''}$$

or, assuming the voltage magnitudes have the following relation,

$$E_s = E_m = E$$

then,

$$I = \frac{2E}{X_s + X''}$$

If some estimate of the rate of decline of machine voltage and reclosure time of the switching device is known, the expression can be modified to consider the vector difference between the two voltages at the time of reclosure. In such cases,

$$I = \frac{\Delta E}{X'' + X_s}$$

where ΔE is defined in figure 8-15.

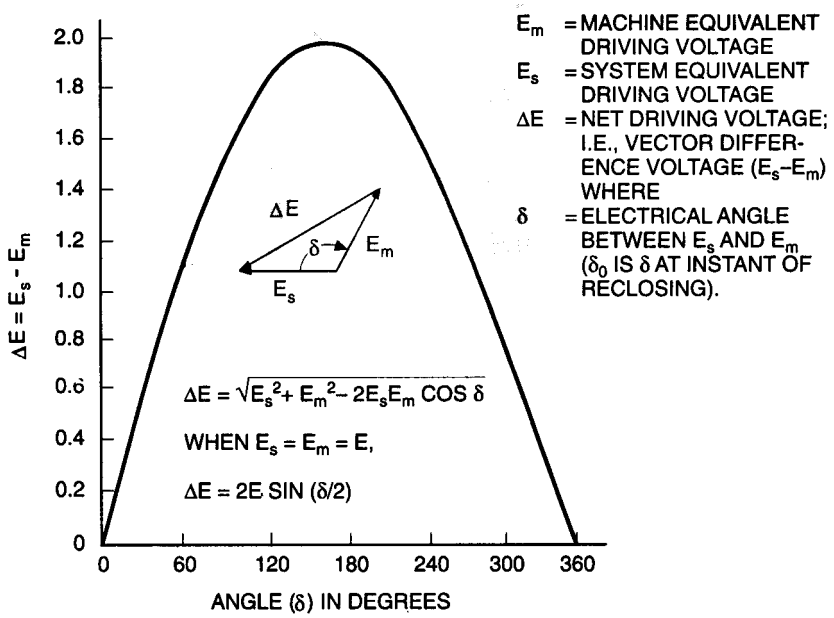

Figure 8-15—Effect of phase angle between components of net driving voltage at the instant of circuit breaker reclosure

Copyright The Institute of Electrical and Electronics Engineers, Inc.
Provided by IHS under license with IEEE
No reproduction or networking permitted without license from IHS
Not for Resale

To obtain asymmetrical current, a suitable dc offset factor must be applied. The application of this technique is much like that of determination of short-circuit currents, except the net driving voltage may be higher. When the value of current I, representing the inrush current, is greater than I_M, representing motor-withstand capability, then the motor is in danger of being damaged.

8.9.4 Selection of capacitor

Warning: In no case should power factor improvement capacitors be applied in ratings exceeding maximum safe values specified by the motor manufacturer. For additional information on safety considerations, consult NEMA MG 2-1989. Many manufacturers provide tables of standard motor designs with recommended values of capacitor kvars listed by voltage, hp, and speed with kvar sizes and percent current reduction. It should be noted that there is a great difference in the capacitor kvar rating to use for any given motor rating, depending primarily on the motor speed. There also is a large difference in the recommended capacitor ratings of different design vintages, such as

— U-frame, 1955 to 1964
— T-frame, 1964 and later
— High efficiency frames, 1979 and later

In the event that manufacturer's recommendations for capacitors are not readily available, the correct capacitor rating can be determined either by obtaining the motor's no-load current from the manufacturer or by test measurement. The equivalent amount of current kvar at the system voltage will improve the motor circuit power factor to a high value for a wide range of loading. When motor capacitor rating is not known or when measurement of the motor no-load current is impractical, tables 8-3–8-5 will serve as guides.

When the capacitor is connected as in figure 8-12 (a), the current through the overload relay is less than the motor current alone. The percent line current reduction may range from 10–25%.

The motor overload relay should be selected or changed to match the lower motor current with capacitors installed.

The percent line current reduction may be approximated from the following expression:

$$\%\Delta I = 100\left(1 - \frac{\cos\phi_1}{\cos\phi_2}\right) \tag{19}$$

where

$\%\Delta I$ is the percent line current reduction
$\cos\phi_1$ is the power factor before installation of capacitor
$\cos\phi_2$ is the power factor after installation of capacitor

Copyright The Institute of Electrical and Electronics Engineers, Inc.
Provided by IHS under license with IEEE
No reproduction or networking permitted without license from IHS Not for Resale

Table 8-3—Suggested maximum capacitor ratings—used for high-efficiency motors and older design (pre-"T-frame") motors

Induction motor horsepower rating	Number of poles and nominal motor speed in rpm											
	2 3600 rpm		4 1800 rpm		6 1200 rpm		8 900 rpm		10 720 rpm		12 600 rpm	
	Capacitor kvar	Current reduction %	Capacitor kvar	Current reduction %	Capacitor kvar	Current reduction %	Capacitor kvar	Current reduction %	Capacitor kvar	Current reduction %	Capacitor kvar	Current reduction %
3	1.5	14	1.5	15	1.5	20	2	27	2.5	35	3	41
5	2	12	2	13	2	17	3	25	4	32	4	37
7.5	2.5	11	2.5	12	3	15	4	22	5	30	6	34
10	3	10	3	11	3	14	5	21	6	27	7.5	31
15	4	9	4	10	5	13	6	18	8	23	9	27
20	5	9	5	10	6	12	7.5	16	9	21	12.5	25
25	6	9	6	10	7.5	11	9	15	10	20	15	23
30	7	8	7	9	9	11	10	14	12.5	18	17.5	22
40	9	8	9	9	10	10	12.5	13	15	16	20	20
50	12.5	8	10	9	12.5	10	15	12	20	15	25	19
60	15	8	15	8	15	10	17.5	11	22.5	15	27.5	19
75	17.5	8	17.5	8	17.5	10	20	10	25	14	35	18
100	22.5	8	20	8	25	9	27.5	10	35	13	40	17
125	27.5	8	25	8	30	9	30	10	40	13	50	16
150	30	8	30	8	35	9	37.5	10	50	12	50	15
200	40	8	37.5	8	40	9	50	10	60	12	60	14
250	50	8	45	7	50	8	60	9	70	11	75	13
300	60	8	50	7	60	8	60	9	80	11	90	12
350	60	8	60	7	75	8	75	9	90	10	95	11
400	75	8	60	6	75	8	85	9	95	10	100	11
450	75	8	75	6	80	8	90	9	100	9	110	11
500	75	8	75	6	85	8	100	9	100	9	120	10

NOTE—For use with three-phase, 60 Hz, Design B motors (NEMA MG 1-1993) to raise full-load power factor to approximately 95%.

Warning: Use motor manufacturer's recommended kvar as published in the performance data sheets for specific motor types: drip-proof, TEFC, severe duty, high efficiency, and NEMA design.

The level to which the power factor should be improved depends on the economic payback in terms of utility power factor penalty requirements and system energy saved due to lower losses. In addition, the characteristic of the motor load must be considered. If the motor load is a cyclical load that varies from the rated load to a light load, the value of corrective kvar capacitance should not result in a leading power factor at light loads. To avoid this possibility, it is recommended that the maximum value of corrective kvar added not exceed the motor's no-load kvar requirement.

Copyright The Institute of Electrical and Electronics Engineers, Inc.
Provided by IHS under license with IEEE
No reproduction or networking permitted without license from IHS
Not for Resale

**Table 8-4—Suggested maximum capacitor ratings—
"T-frame" NEMA Design B motors**

Induction motor horsepower rating	Number of poles and nominal motor speed in rpm											
	2 3600 rpm		4 1800 rpm		6 1200 rpm		8 900 rpm		10 720 rpm		12 600 rpm	
	Capacitor kvar	Current reduction %	Capacitor kvar	Current reduction %	Capacitor kvar	Current reduction %	Capacitor kvar	Current reduction %	Capacitor kvar	Current reduction %	Capacitor kvar	Current reduction %
2	1	14	1	24	1.5	30	2	42	2	40	3	50
3	1.5	14	1.5	23	2	28	3	38	3	40	4	49
5	2	14	2.5	22	3	26	4	31	4	40	5	49
7.5	2.5	14	3	20	4	21	5	28	5	38	6	45
10	4	14	4	18	5	21	6	27	7.5	36	8	38
15	5	12	5	18	6	20	7.5	24	8	32	10	34
20	6	12	6	17	7.5	19	9	23	10	29	12.5	30
25	7.5	12	7.5	17	8	19	10	23	12.5	25	17.5	30
30	8	11	8	16	10	19	15	22	15	24	20	30
40	12.5	12	15	16	15	19	17.5	21	20	24	25	30
50	15	12	17.5	15	20	19	22.5	21	22.5	24	30	30
60	17.5	12	20	15	22.5	17	25	20	30	22	35	28
75	20	12	25	14	25	15	30	17	35	21	40	19
100	22.5	11	30	14	30	12	35	16	40	15	45	17
125	25	10	35	12	35	12	40	14	45	15	50	17
150	30	10	40	12	40	12	50	14	50	13	60	17
200	35	10	50	11	50	11	70	14	70	13	90	17
250	40	11	60	10	60	10	80	13	90	13	100	17
300	45	11	70	10	75	12	100	14	100	13	120	17
350	50	12	75	8	90	12	120	13	120	13	135	15
400	75	10	80	8	100	12	130	13	140	13	150	15
450	80	8	90	8	120	10	140	12	160	14	160	15
500	100	8	120	9	150	12	160	12	180	13	180	15

NOTE—For use with three-phase, 60 Hz, Design B motors (NEMA MG 1-1993) to raise full-load power factor to approximately 95%.

8.10 Capacitor standards and operating characteristics

Standards for the manufacturer of capacitors are covered by criteria described in IEEE Std 18-1980.

8.10.1 Capacitor ratings

The following tolerances in ratings are among those considered significant in capacitor applications:

a) Zero to +15% tolerance on rated reactive power at rated voltage and frequency. In actual construction the average capability above rating will be close to +4%.

Copyright The Institute of Electrical and Electronics Engineers, Inc.
Provided by IHS under license with IEEE
No reproduction or networking permitted without license from IHS Not for Resale

Table 8-5—Suggested capacitor ratings, in kilovars, for NEMA Design C, D, and wound-rotor motors

Induction motor rating (hp)	Design C motor		Design D motor 1200 r/min	Wound-rotor motor
	1800 and 1200 r/min	900 r/min		
15	5	5	5	5.5
20	5	6	6	7
25	6	6	6	7
30	7.5	9	10	11
40	10	12	12	13
50	12	15	15	17.5
60	17.5	18	18	20
75	19	22.5	22.5	25
100	27	27	30	33
125	35	37.5	37.5	40
150	37.5	45	45	50
200	45	60	60	65
250	54	70	70	75
300	65	90	75	85

NOTE—Applies to three-phase, 60 Hz motors when switched with capacitors as single unit.

b) Continuous operation at 135% of the unit's rated reactive power, including both fundamental and harmonic voltages.

c) Continuous operation at 110% of rated terminal voltages.

d) Operating voltage, including harmonics, is 120%.

e) Continuous operation at 180% of rated rms current at one-per-unit voltage. If capacitors are operating close to this limit, the manufacturer should be consulted regarding fuse selection.

f) Ambient temperature limits depend upon the mounting arrangements and, hence, the ventilation. The range of 24-hour ambient temperatures is from 35 °C in enclosed equipment to 46 °C for isolated units in open mountings. The minimum ambient temperature is – 40 °C.

8.10.2 Maximum voltage

Many power capacitors have the ability to operate above their voltage rating for very short periods of time. This type of application is sometimes used as a local source of reactive power to control voltage drops during motor start-up. The capacitors are disconnected as the motor comes up to speed. Wherever capacitors are to be operated above their voltage rating, however, the application should be referred to the capacitor manufacturer. It should be noted that overvoltage is the major reason for capacitor failure. Also, see 9.8.2.4 of Chapter 9.

Copyright The Institute of Electrical and Electronics Engineers, Inc.
Provided by IHS under license with IEEE
No reproduction or networking permitted without license from IHS
Not for Resale

8.10.3 Temperature

Capacitors should not be placed in hot locations near furnaces or resistors, exposed to sunshine in hot climates, or placed where air cannot circulate, unless special provision is made for cooling or for operating the capacitors below nameplate voltage. Neglect of these points will shorten capacitor life. (See IEEE Std 18-1980.)

8.10.4 Time to discharge

ANSI/NFPA 70-1993 (National Electric Code) (NEC) requires capacitors to be discharged to a residual voltage of 50 V or less in 1 min for capacitors rated 600 V or less, and requires discharge to 50 V or less in 5 min for those rated above 600 V. This is usually accomplished with built-in discharge resistors. However, they are not required when capacitors are connected without disconnecting means directly to other discharge paths, such as motors or transformers.

8.10.5 Effect of harmonics on capacitors

Capacitors have a substantial margin for harmonic currents and voltages. IEEE Std 18-1980 requires capacitors to carry 135% of rating in kvar, including that of the fundamental and harmonics.

If the voltage level and waveform are approximately sinusoidal, it is unlikely that a capacitor would be overloaded by harmonics, although it can happen if a source of harmonic currents is nearby, as illustrated in figure 8-16.

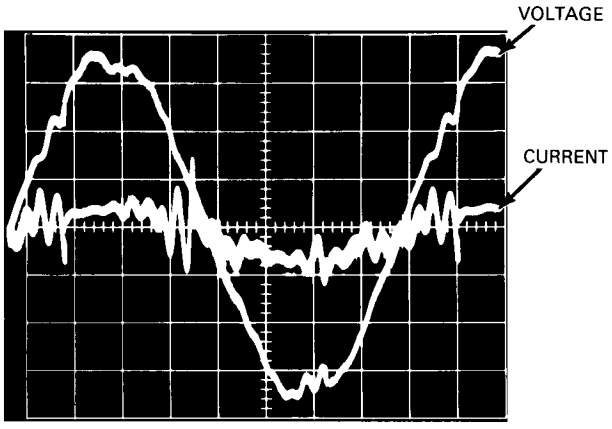

Figure 8-16—Oscillogram of 480 V line voltage and capacitor current near a thyristor-controlled furnace, 150 ft away from a 1000 kVA transformer, capacitor overheated

Copyright The Institute of Electrical and Electronics Engineers, Inc.
Provided by IHS under license with IEEE
No reproduction or networking permitted without license from IHS Not for Resale

For specific effects of harmonics on capacitors, consult the capacitor manufacturer.

8.10.6 Operating characteristics

The following relationships apply when capacitors are operated at other than their designrated operating conditions:

a) The reactive power varies as the square of the applied voltage.
b) The reactive power varies as the frequency.

8.11 Controls for switched capacitors

Industrial power systems have been less likely to employ switched capacitor banks than are the utilities. However, increasing emphasis on maintaining a high power factor without overvoltage during periods of light load, to achieve minimum purchased power cost, has led to application of switching controls within the industrial environment.

There are a variety of ways by which circuit conditions can be sensed and switching actions initiated. Time, voltage, current, kilovars, and some combinations of two inputs can be utilized in order to add or remove capacitors from the system to meet varying conditions. To utilize the capacitors most effectively and to select the most suitable control will require a knowledge of the daily and weekly variations in circuit conditions. This includes the time of day when change can be expected and the magnitude of change in terms of current, voltage, and/or kilovars. Some of the most commonly encountered controls and some of the factors in their selection and application are discussed in the following sections.

8.11.1 Control strategy

Switched capacitors are not used for finite voltage control. For economical control, the voltage control band should be as large as the system operating conditions will allow. For most operations only two or four switching operations should occur per day. A time delay is always used to prevent unnecessary switching due to momentary voltage fluctuations. With some types of voltage regulating relays, a separate time delay relay is used. If an induction disktype voltage regulating relay is used, the inverse-time characteristic of the relay usually will provide sufficient time delay. Where separate timers are used, a common delay setting is one minute.

Coordination with other voltage-regulating equipment is required, when using voltage control for switching capacitors, so that operation of one device (switched capacitor or regulator) will not cause an operation of another device, resulting in excessive operations and possibly pumping.

8.11.2 Time-switching control

Time-switch or time-clock control is one of the most common types of control used with switched capacitor banks. The control simply switches the capacitor bank on at a certain time

Copyright The Institute of Electrical and Electronics Engineers, Inc.
Provided by IHS under license with IEEE
No reproduction or networking permitted without license from IHS
Not for Resale

of the day and takes it off at another time. Its greatest application is with small single-step banks where the daily load cycle is known and consistent.

A carry-over device is required for each time clock to keep the clock running during temporary power outages. Most carry-over devices are of the mechanical-spring type and can keep the clock running for up to 36 hours. The spring is continually kept in a wound position by the small electric motor which runs the clock. During a power outage, the spring begins to unwind. If power is restored before the carry-over period has passed, the motor restores the spring to its wound position. If a carry-over device is not used, it will be necessary for each capacitor location that is affected to be manually reset after a power outage. Time resetting also is necessary twice yearly for Daylight to Standard Time adjustments.

An omitting device, or "day skipper," also is required for each time clock to omit switching the capacitors "on" or "off" on days where the known load cycle will change, such as Sundays and holidays. On some circuits there may be a definite reduction in feeder loading on these days, and if the capacitors were switched on, overvoltage could result.

The greatest advantage of time-switch control is its low cost. A disadvantage is that its switching cycle is fixed and it receives no intelligence enabling it to respond to unusual loading conditions or to mid-week holidays or unscheduled shutdowns.

8.11.3 Voltage control

Voltage alone can be used as a source of intelligence only when the switched capacitors are applied at a point where the circuit voltage decreases as circuit load increases. Generally where they are applied, the voltage should decrease 4–5 V (120 V base) with increasing load before the capacitors are energized.

Voltage is the most common type of intelligence used in substation applications. It has the advantage of initiating a switching operation only when the circuit voltage conditions request an operation, and it is independent of the load cycle. The bandwidth setting, usually about 4–10 V out of 120 V, will depend upon the rating of the capacitor bank, the number of steps, and whether other voltage regulating equipment also is applied on the same circuit.

8.11.4 Current control

Current control alone is used on applications where the reduction in voltage as load increases is too small for effective control. Effective current control requires a ratio of three or more between minimum and maximum load.

The greatest applications of current control are with single-step capacitor banks applied on circuits or in substations where large intermittent loads are either on or off. With this type of control, the sensor should always be connected on the load side of the capacitor bank so as to only measure load current, not load current plus capacitor current.

Copyright The Institute of Electrical and Electronics Engineers, Inc.
Provided by IHS under license with IEEE
No reproduction or networking permitted without license from IHS Not for Resale

Current control does not recognize circuit voltage. Therefore, voltage conditions throughout the plant's load cycle must be known to properly determine when the capacitors should be switched on and off so as to avoid overvoltage conditions.

8.11.5 Voltage sensitive with time bias

This control scheme is used where the voltage profile remains relatively flat over 24-hour periods, thus preventing use of voltage-only controls. One type of timing device is a photo-timer with step bias compensation. This step biasing by time permits differentiation for day-night operation that generally removes the capacitors at night and applies them during the day despite a relatively narrow on-off band.

8.11.6 Kilovar controls

Kilovar sensitive controls are utilized at locations where the voltage level is closely regulated and not available as a control variable. This can occur on an industrial bus which is served by an LTC-equipped transformer or a generator system with automatic voltage regulators. In these cases, the capacitors still can be switched to respond to decreasing power factor as a result of changes in system loading.

The kilovar control requires both current and voltage inputs, so it will have a higher cost. The kilovar control would be used when the power factor needs to be more accurately controlled, particularly if several steps are involved.

8.12 Transients and capacitor switching

Considering the extensive number of capacitors in service within industry, there have not been many capacitor failures due to exposure to transients. A major cause of capacitor bank failures is overvoltage, but most transients occurring on a power system do not impose an overvoltage stress on the capacitor bank. This happens because the capacitor bank appears as a very low impedance to the high frequency energy of transients and, thus, tends to act as a "sink," and absorbs transients without having an excess of voltage impressed across its terminals.

Transient voltages and currents resulting from capacitor switching, however, can cause severe difficulties to other components and loads on the power system. Solid-state drives and control systems are particularly vulnerable to these transients.

8.12.1 Low-voltage switching

There is rarely any problem encountered in the interruption, closing, or repetitive operation of low-voltage air circuit breakers, molded-case circuit breakers, contactors, or switches associated with capacitor equipment for industrial service.

The NEC, Article 460, requires switching devices to be selected for at least 135% of the continuous-current rating of the capacitor and to have the proper interrupting rating for the system short-circuit capacity. Also, the manufacturer of the capacitor switching device should be consulted concerning the device capacitance current switching capability.

Copyright The Institute of Electrical and Electronics Engineers, Inc.
Provided by IHS under license with IEEE
No reproduction or networking permitted without license from IHS
Not for Resale

Table 8-6 in 8.12.2.3 is a convenient reference in selecting the various switching devices for low-voltage systems.

8.12.2 Medium-voltage switching

Virtually every random switching event entails the possibility of producing transient (voltage and current) duties. These transient duties are exponentially-damped natural-frequency oscillations that accompany the fundamental-frequency voltage and current during the transient period between the pre-switching steady-state condition and the post-switching steady-state condition. Power capacitors have unique properties which may present relatively arduous switching circumstances wherein severe transient duties are possible in association with inadequate or poorly maintained capacitor switching devices. Also, it should be noted that the capacitance current switching capabilities for some switching devices (particularly certain medium-voltage breakers) is lower than for inductive-resistance currents. The availability of guides (such as table 8-6), standards, such as ANSI C37.06-1987, IEEE Std C37.012-1979, IEEE Std 18-1980, NEMA MG 1-1993, and the NEC, many published technical papers, and manufacturers' application data, have made it possible to minimize serious capacitor switching problems.

Four distinct capacitor switching arrangements should be recognized:

a) Single-bank energizing
b) Parallel banks (multistep banks, or bank-to-bank) energizing
c) De-energizing (switching off) without switch reconduction (restrike)
d) De-energizing with switch reconduction (restrike)

To simplify this discussion, familiar Thevenin one-line equivalent diagrams will be used. This is directly applicable to the grounded-neutral capacitor bank connection wherein switching transients associated with any one phase are somewhat isolated from the other two phases of a three-phase installation. It is also adequate for isolated neutral capacitor bank applications, used in a large majority of industrial installations, even though switching events on one phase are evident on the other phases.

8.12.2.1 Energizing single-bank capacitors

Figure 8-17 is a fundamental circuit parameter (R, L, C) representation of a capacitor being energized and de-energized via capacitor switch operation. This may be used as a line-to-neutral representation for a three-phase circuit, where the driving voltage e is *instantaneous* line-to-neutral fundamental-frequency power system voltage, and R and L are system impedance-associated quantities. Figure 8-18 (a) is the oscillogram of capacitor voltage that results following switch closing on an *uncharged capacitor* at the instant of crest of the fundamental-frequency voltage. Figure 8-18 (b) shows that this consists of two components:

— A fundamental-frequency component
— A damped natural-frequency transient component

Since voltage cannot be changed on a capacitor instantly, the transient component necessarily develops that, when added to the fundamental, maintains pre-switching capacitor voltage at

Copyright The Institute of Electrical and Electronics Engineers, Inc.
Provided by IHS under license with IEEE
No reproduction or networking permitted without license from IHS Not for Resale

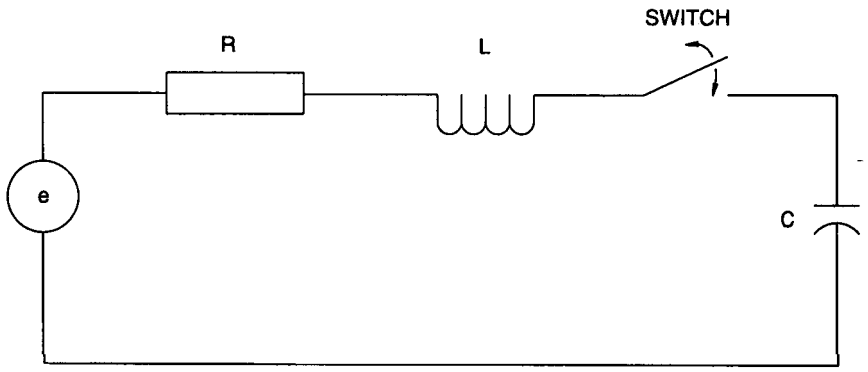

Figure 8-17—Circuit representing capacitor being switched through system inductance and resistance

instant of switch closing. Thus the initial magnitude of the transient component is the *difference* between the capacitor pre-switching voltage (zero in this case) and the fundamental-frequency steady-state voltage (crest of source voltage in this case). These are the so-called "switch volts," which represent the excitation "impulse" that "creates" the transient, and the greater the switch volts the greater the transient voltage and current. A finite pre-energizing (trapped-charge) capacitor voltage may increase or decrease the transient, depending upon its polarity with respect to the fundamental at instant of switching. Normally, low trapped-charge capacitor voltage is ensured via bleeding resistors in the capacitor units and delayed reclosing of the capacitor banks.

Switch closing at the fundamental voltage crest, as in figure 8-18 (a), produces the maximum transient response. If the switch closing is at the instant of zero fundamental voltage, then the transient would be zero. This is the basis of so-called "zero voltage control" in minimizing capacitor energizing duties.

Resistance has some influence on the natural frequency. However, if R is small, as is usual in practical power distribution circuits, the natural frequency is given approximately by

$$f_n = \frac{1}{2\pi\sqrt{LC}} (\text{in Hz}) \tag{20}$$

This can be shown to be

$$f_n = \sqrt{\frac{X_c}{X_L}} = \sqrt{\frac{MVA_{sc}}{Mvar}} (\text{per unit of fundamental frequency}) \tag{21}$$

where

X_c is the capacitor reactance at fundamental frequency
X_L is the system reactance at fundamental frequency
MVA_{sc} is the system short-circuit duty
$Mvar$ is the capacitor rating

Copyright The Institute of Electrical and Electronics Engineers, Inc.
Provided by IHS under license with IEEE
No reproduction or networking permitted without license from IHS
Not for Resale

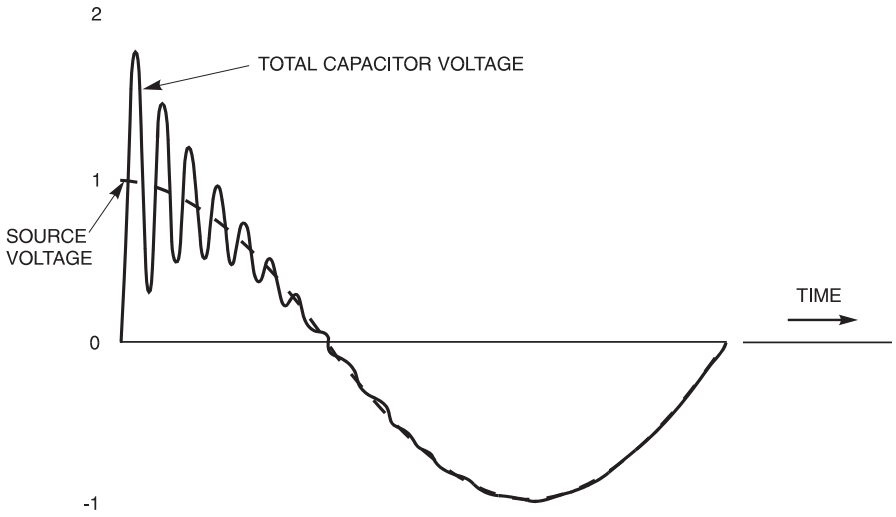

(a) Oscillogram of total capacitor voltage illustrating that the transient component oscillates about the source voltage

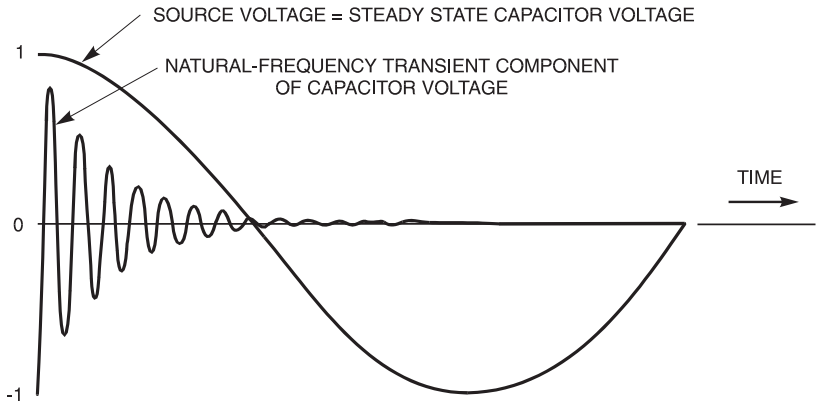

(b) Transient and steady-state components of the oscillogram

Figure 8-18—Capacitor voltage following energization at crest of system voltage

--`,,`-`-`,,`,,`,`,,`---

Copyright The Institute of Electrical and Electronics Engineers, Inc.
Provided by IHS under license with IEEE
No reproduction or networking permitted without license from IHS Not for Resale

Since X_c varies inversely with frequency, the right-hand side expressions of equation (21) also express the per unit initial magnitude of the natural-frequency transient component of capacitor current at 1.0 per unit voltage, assuming no damping. Adding this to the fundamental-frequency current per unit magnitude (1.0) results in a total inrush current of

$$i = \left(\sqrt{\frac{X_c}{X_L}} + 1.0\right)(\text{per unit capacitor current}) \tag{22}$$

in the presence of 1.0 per unit switch volts. At rated capacitor system voltage the maximum instantaneous inrush current attending capacitor energizing is, assuming no damping,

$$i_{\max} = 2 \cdot I_{\text{rms (rated)}}\left(\sqrt{\frac{X_c}{X_L}} + 1.0\right)(\text{in amperes}) \tag{23}$$

Similarly, without damping, the maximum instantaneous capacitor voltage would be two times crest of line-to-neutral voltage. Actually, according to figure 8-18 (a) and (b), damping will be invoked in the natural-frequency component and it will be evident at its first half-cycle point; therefore equation (23) is slightly conservative, indicting a slightly higher magnitude than actual.

Since X_c is typically very large compared to X_L, by equation (21), the initial inrush current to a single-bank capacitor may be many times its normal steady-state current, often in the range of 5 to 15 times. IEEE Std 18-1980 provides guidance on the permitted frequency of capacitor energizing versus severity of maximum initial inrush current. Figure 8-18 (a) illustrates that the natural-frequency component of capacitor inrush current is damped out quickly. The time-constant (T) associated with this exponential decay is $2L/R$.

Finally, it is to be noted that this discussion is based upon single-event "clean" switching with no "pre-ignitions," "pre-strikes," or pre-conductions and clearings of any kind. Such phenomena present the potential for aggravated energizing transient currents and voltages. If a given electrical closing of the switch occurs before the transient has subsided from a previous reconduction and clearing, the associated switch volts may be substantially increased, thus increasing the ensuing transient. This can be avoided by ensuring an adequate and properly maintained switch for the application.

8.12.2.2 De-energizing capacitors

Figure 8-19 illustrates the salient considerations associated with the de-energizing (switch-opening) aspects of the arrangement of figure 8-17. If the switch is assumed to have opened mechanically at some time shortly before time zero (figure 8-19), then current interruption will take place at a "normal" current zero such as at time *a*. Since the capacitor current leads capacitor voltage by 90°, this is also at an instant very near the crest of fundamental voltage. Thus, the electrical opening of the switch at this time traps charge on the capacitor that maintains dc voltage of crest-of-fundamental magnitude on the capacitor side of the switch following the clearing. However, on the source side of the switch, voltage continues its normal

Copyright The Institute of Electrical and Electronics Engineers, Inc.
Provided by IHS under license with IEEE
No reproduction or networking permitted without license from IHS
Not for Resale

fundamental-frequency cyclic variation. This produces a gradual increase in switch volts (volts *across* the switch) for a period of one-half fundamental cycle until the next (negative) crest of fundamental is reached (point *h*) at instant *c*. As shown, the switch volts have attained twice crest of fundamental at this instant.

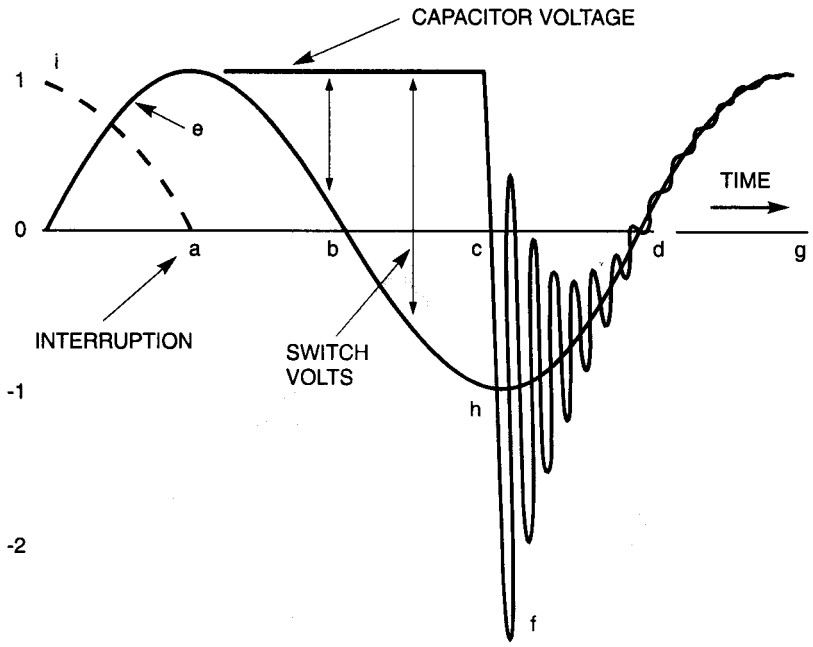

Figure 8-19—Capacitor de-energizing with a single maximum restrike following initial clearing

If the switch can withstand this twice "normal" crest voltage one-half cycle following clearing, successful clearing will have been at point *a*. Capacitor voltage (crest of fundamental) is not changed suddenly by this switching (switch volts equal zero). No transient voltage or current is produced. Clean de-energizing produces no transients.

If, during the period (*a* to *c*) of switch voltage buildup, the switch does not achieve adequate dielectric recovery, the arc will ignite or "restrike" between the switch contacts. This will initiate a re-energizing transient being driven by the switch volts at the instant of re-ignition or restrike. The maximum transient duties result if the restrike occurs at the switch voltage of twice crest of fundamental, time *c*, as illustrated in figure 8-19. As such, this conforms in every respect to the transient mechanics discussed earlier for capacitor energizing. The transient voltage "swing" will "overshoot" the fundamental by an amount nearly equal to the switch volts, in this case to nearly minus (–) 3.0 times crest of 60 Hz, point *f*.

Since a corresponding high natural-frequency current attends the voltage transient, this current may interact with 60 Hz current to produce a current zero just after time *c*, causing a sec-

Copyright The Institute of Electrical and Electronics Engineers, Inc.
Provided by IHS under license with IEEE
No reproduction or networking permitted without license from IHS
Not for Resale

ond interruption which would leave a trapped charge on the capacitor of voltage *f* of nearly 3.0 per unit. As the system voltage again swings to plus (+) 1.0, a maximum switch voltage of 4.0 could result and a restrike at time *g* would produce (4.0 + 1.0) = 5.0 times normal voltage, etc. This general scenario corresponds closely to that presented in Chapter 6 on Surge Voltage Protection as related to restriking interruption of capacitance current. However, compounding of this nature is rarely, if ever, found in practice. Properly applied modern capacitor switching devices rarely restrike and, if so, not more than once. Recognize that in the foregoing, restriking has been assumed at the worst possible time. Restrikes of lower switch volts obviously produce lower transients. Voltages in the range of up to 2.5 times normal are more typical of field measurements.

8.12.2.3 Switching parallel capacitor banks

Figure 8-20 illustrates the switching of a capacitor bank (C_2) against an already energized bank (C_1) at the same location. In this figure, L_2 is the total inductance of the switches, bus, current transformers, etc., between the two capacitor banks. This is often a very small inductance in the range of 100 or 200 μH. Although transient voltages associated with this type of installation are comparable to the single-bank arrangement, due to the electrical proximity of C_1 and C_2 the inrush currents may be much higher.

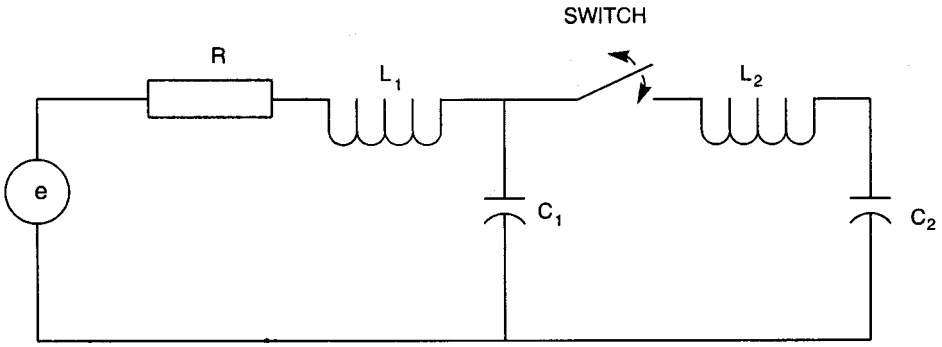

Figure 8-20—Switching of parallel capacitor banks

This circuit has two predominate natural frequencies:

$$f_{n_1} = \frac{1}{2\pi\sqrt{L_1(C_1 + C_2)}} (\text{in Hz}) \tag{24}$$

and

Copyright The Institute of Electrical and Electronics Engineers, Inc.
Provided by IHS under license with IEEE
No reproduction or networking permitted without license from IHS
Not for Resale

$$f_{n_2} = \frac{1}{2\pi\sqrt{\frac{L_2 C_1 C_2}{C_1 + C_2}}} (\text{in Hz}) \tag{25}$$

By inspection, f_{n_1} can be seen to be the result of the two capacitors in parallel $(C_1 + C_2)$ oscillating with the system short-circuit inductance (L_1). However, f_{n_2} is essentially the natural frequency of the local circuit components [L_2 and C_1 and C_2 in series $C_1C_2/(C_1+C_2)$].

In practice L_2 can be exceedingly small, and C_1 and C_2 in series results in an effective capacitance smaller than either C_1 or C_2. Therefore f_{n_2} may be very high, sometimes ranging up to 200 times fundamental, or higher. The associated undamped natural-frequency current is the same, which is

$$i_2 = \frac{e}{\sqrt{\frac{L_2(C_1 + C_2)}{C_1 C_2}}} (\text{in amperes}) \tag{26}$$

Installations of this type often augment L_2 with an "inrush control" reactor sized to reduce an otherwise excessive i_2.

Depending upon their design and operating mechanisms, vacuum circuit breakers may or may not need to be derated. Typical ratings of breakers not specifically rated for capacitor switching are shown in table 8-6. More detail can be found in IEEE Std C37.012-1979 and IEEE Std C37.010-1979.

8.12.3 Static power converters

On systems where there are static power converters, capacitors for power factor improvement tend to act as local energy sources that will help maintain voltage during commutation. They maintain the voltage during the commutation of the current among the different phases by the static power converter. These commutation notches in the voltage wave are filled in from the voltage of the capacitors. See figure 8-21. Without the capacitors, the voltage notches are about 50% of the crest value of the voltage wave. (There is some reactance between the static power converter bridge and the bus where the picture was taken.) However, when power factor capacitors are installed on the bus, the voltage notches are filled in from the voltage of the capacitor.

When capacitors are installed on the same bus as the static power converter, with no isolation transformer or line reactor present, the high dv/dt that results from the capacitor voltage can be damaging to the semiconductor devices. It takes a finite time, a few microseconds, for the device to change from conducting in the forward direction to blocking in the reverse direction. For this reason, manufacturers require that either an isolation transformer or line reactors be placed between the power factor capacitors and the static power converter bridge.

Copyright The Institute of Electrical and Electronics Engineers, Inc.
Provided by IHS under license with IEEE
No reproduction or networking permitted without license from IHS Not for Resale

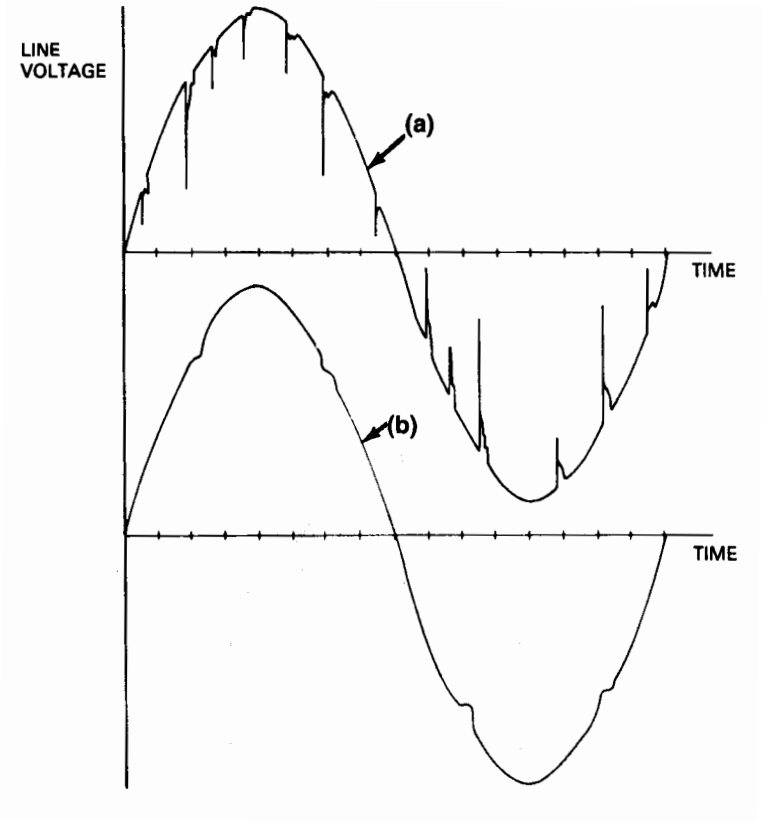

Figure 8-21—Illustration of the reduction of rectifier commutation switching transients by the application of power capacitors

(a) Before the addition of capacitors' line-voltage distortions caused by chopped-wave loads (notches varied with loading, but dv/dt was hundreds of volts per microsecond)

(b) Improvement with capacitors installed at loads

8.13 Protection of capacitors and capacitor banks

Shunt capacitor bank protection shall be installed in accordance with the applicable provisions of the NEC. See IEEE Std C37.99-1980 for additional protection information. Article 460 of the NEC requires overcurrent protection for capacitors 600 V and under, and Section 460-25 requires overcurrent protection for capacitors over 600 V nominal. An exception is provided for capacitors under 600 V that are protected by the motor overcurrent device.

The extremely low failure rate recorded for capacitors represents the overall average failure rate for all applications for industrial, commercial, and utility applications. In locations involving frequent switching and/or harmonic duties, however, capacitors have lower reli-

Copyright The Institute of Electrical and Electronics Engineers, Inc.
Provided by IHS under license with IEEE
No reproduction or networking permitted without license from IHS
Not for Resale

Table 8-6—Capacitor rating multipliers to obtain switching-device* rating

Type of switching device	Multiplier to obtain equivalent capacitor rating	Equivalent current per kvar		
		240 V	480 V	600 V
Magnetic-type power circuit breaker	1.35	3.25	1.62	1.30
Molded-case circuit breakers Magnetic type Others	 1.35 ≅ 1.5	 3.25 ≅ 3.61	 1.62 ≅ 1.8	 1.30 ≅ 1.44
Contactors, enclosed†	1.5	3.61	1.8	1.44
Safety switch	1.35	3.25	1.62	1.30
Safety switch (fusible)	1.65	3.98	1.98	1.58

*Switching device must have a continuous-current rating that is equal to or exceeds the current associated with the capacitor kvar rating times the indicated multiplier. Enclosed switch ratings at 40 °C (104 °F) ambient temperature.
†If manufacturers give specific ratings for capacitors, these should be followed.

ability rates because of misapplication; therefore, protection of the units becomes increasingly important.

Fuses tend to be the preferred and economical method of providing protection. In addition to helping to maintain service and preventing damage, current-limiting indicating fuses also provide visual indication of a failed unit and limit the energy into a faulted unit to help prevent case rupture.

A fuse for a capacitor is not for overload protection. The fuse is used to remove a failed capacitor from the circuit. The current ratings of capacitor fuses range from 140% to 250% of the capacitor current rating.

8.13.1 Protection principles

Several fundamental principles must be observed in the selection of fuses for capacitor application. They are as follows:

a) The fuse link must be capable of continuously carrying 135% of the rated capacitor current.

b) The fuse cutout must have sufficient interrupting capacity to successfully handle the available fault current, clearing voltage, and available energy before the capacitor tank ruptures.

Copyright The Institute of Electrical and Electronics Engineers, Inc.
Provided by IHS under license with IEEE
No reproduction or networking permitted without license from IHS Not for Resale

c) The fuse link must withstand, without damage, the normal transient current during bank energization or de-energization. Similarly, it must withstand the capacitor unit's discharge current during a terminal-to-terminal short.
d) For ungrounded wye banks, maximum fault current usually is limited to three times normal line current. The fuse link must clear within five minutes at 95% of available fault current.
e) For effective capacitor protection, maximum asymmetric rms fault current should not exceed the current value at the intercept of the tank-rupture time-current characteristic (TCC) curve and the minimum time shown on the fuse maximum-clearing time-current characteristic curve.
f) The maximum-clearing TCC curve of the fuse link must coordinate with the tank-rupture TCC curve of the capacitor.

8.14 Resonance and harmonics

Resonance is a special circuit condition in which the inductive reactance is equal to the capacitive reactance. Any circuit has a resonant condition at some particular frequency. The frequency at which a circuit is in resonance is called the natural frequency of the circuit. When there is no intentional capacitance added to the circuit, the natural frequency of most power circuits is in the kilohertz range. Since there is normally no source of currents in this range, the natural frequency of a circuit and the resonance associated with it is not normally a problem.

Problems can be created however, when capacitors for power-factor improvement are applied to circuits with nonlinear loads that interject harmonic currents. Those capacitors may lower the resonant frequency of that circuit enough to create a resonant condition with the harmonic currents. As resonance is approached, the magnitude of harmonic current in the system and capacitor becomes much larger than the harmonic current generated by the nonlinear load. The current may be high enough to blow capacitor fuses, an indication of the possibility of resonance. A solution to this problem is to detune the circuit by changing the point where the capacitors are connected to the circuit, the amount of applied capacitance, or by installing specially designed filter reactors. Loads that produce non-sinusoidal currents and voltages are listed in 3.10.3.

Although capacitors in themselves do not generate harmonics, the effects of a capacitor on the circuit impedance may cause any harmonic voltages present to either decrease or increase. Figure 8-22 illustrates an application where capacitors accentuated harmonics and shows the difference in harmonic reinforcement effected by the intervening busway.

8.14.1 Utility switching and variable frequency drives

The switching of utility capacitors and the voltage limitations designed into certain manufacturers' variable frequency drives have caused the drives to shut down due to the capacitor's switching spikes. Several solutions are available, such as the installation of a transformer on the line side of the drive to attenuate the spikes, filters installed on the line side of the drive, or internal modifications to the drive to compensate for the high voltage spike.

Copyright The Institute of Electrical and Electronics Engineers, Inc.
Provided by IHS under license with IEEE
No reproduction or networking permitted without license from IHS
Not for Resale

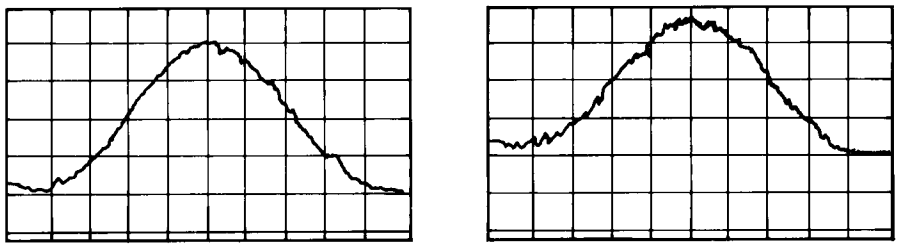

(a) Without Capacitors

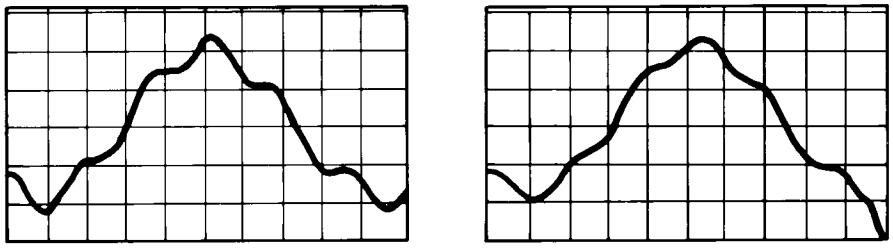

(b) With 350 kvar of Capacitors

NOTE: High-frequency effects have been practically eliminated but 7th harmonic accentuated. Left: oscillograms—at transformer 200 ft from load; right: oscillograms—at load.

Figure 8-22—Oscillograms showing transient voltage and harmonics of line voltage on 480 V side of 2000 kVA transformer loaded mostly with thyristor drives having a wide range of control settings

8.15 Inspection and field testing of power capacitors

Warning: Before performing any tests or handling any capacitors, read the manufacturer's instructions with special attention to safety instructions. Failure to do so can result in severe personal injury or death by electric shock.

a) *Capacitor tests* (from Bishop 1974, 12.3).

1) *Visual check.* For damaged or dirty bushings, obvious leaks, and finish damage needing touch-up.

2) *Capacitance check.* Probably the most important and easiest test to perform on the unit. After ensuring that the capacitor is discharged (refer to the manufacturer's instructions for safety information), a measurement can be made. The measured capacitance should be between 100% and 110% of nominal capacitance. If the capacitance of a unit tests between 90% and 100% or 110% and 120% of nominal capacitance, consult with the manufacturer for comparison with original factory test value. Capacitance higher than 120% of nominal generally indicates one or more short-circuited groups of internal layers, and the capacitor should be considered defective.

Copyright The Institute of Electrical and Electronics Engineers, Inc.
Provided by IHS under license with IEEE
No reproduction or networking permitted without license from IHS Not for Resale

Capacitance readings should be made when the capacitor temperature is at 20–30 °C (68–86 °F).

Nominal capacitance values for standard capacitor units can be determined using the following formula:

$$C_{\text{nom}} = \frac{1000 \cdot \text{kvar}}{(\text{kV})^2 2\pi f} \tag{27}$$

where

C_{nom} is in microfarads (μf).
kV is rated voltage in kilovolts (kV).
f is rated frequency in hertz (Hz).

Rated kvar, voltage, and frequency can be found on the capacitor nameplate.

3) *Dielectric strength tests*. Preferably made using a direct-current voltage of 75% of original factory test level equal to 3.2 times the nameplate voltage rating. The test voltage should be held for 10 s. On single-phase units this voltage is applied bushing-to-bushing or bushing-to-ground-stud for single bushing capacitors. On three-phase wye-connected units, apply voltage phase-to-neutral at a direct-current voltage of 3.2 times the rated one-line-to-neutral voltage between all pairs of bushings.

   An alternate test is to use an alternating-current voltage of 1.5 times the rated voltage. Peak transient voltage on energization must be limited to 125% of the steady-state peak voltage. Breaker restrikes on de-energizing must be prevented.

   During application of test voltage, listen for any indication of internal arcing. If any is heard, the unit is defective.

   Avoid danger to personnel during this test from possible case rupture by maintaining adequate shielding. After the test, discharge the capacitor by using properly insulated resistor with a resistance value in ohms approximately equal to the peak voltage which was applied to the capacitor. The resistor also must have sufficient voltage and energy absorption capability. Initial discharging of the capacitor must be from a shielded location, first with the resistor, then with a final low resistance short. Use the same shorting procedure directly at the capacitor terminals.

   Recheck the capacitor after the overvoltage tests and compare with the original values. Initial and final readings should not vary more than 2%.

4) *Discharge resistor check*. Discharge resistors are included in most capacitors to reduce the voltage from rated voltage to 50 V in 5 min or less for high-voltage capacitors, and within 1 min for capacitors rates 600 V or less. The actual value of resistance should be determined from the manufacturer.

5) *Leak test*. Slow leaks at room temperature are sometimes not detectable, so it might be desirable to conduct a leak test at elevated temperature. If this test is to be performed, it should be done as follows:

   Give the units a preliminary check by tapping the top of the capacitor case with a half-dollar or a heavy washer. A distinctly hollow sound or a sound distinctly

Copyright The Institute of Electrical and Electronics Engineers, Inc.
Provided by IHS under license with IEEE
No reproduction or networking permitted without license from IHS Not for Resale

different in comparison with other units indicate low fluid. Make this test when the units are cool.

Elevated temperature increases the internal pressure, thus improving the chance of detecting leaks. The preferred method of elevating the temperature is to place the capacitor in an oven at 75 °C for 24 hours (only effective in ambient temperatures above 20 °C [68 °F]). Leaking fluid can be more easily seen if the suspect areas are sprayed before heating with a visible red dye developer.[2]

Particular areas to observe are bushing connections, fill plug, mounting bracket weld seams, and all case weld seams. If a leak is detected, consult the manufacturer for possibility of repair.

b) *Capacitor maintenance* (from Bishop 1974, 12.3).

Before re-fusing, make a visual inspection and capacitance test. Also, a check for terminal-to-terminal shorts can be performed using a medium voltage supply.

Warning: Scrap capacitors only in strict conformance with EPA and other applicable federal, state, and local government codes and regulations. Failure to heed this warning can cause severe personal injury or death and damage to property.

When units are beyond repair, scrap in accordance with the following:

1) Capacitors containing polychlorinated biphenol (PCB) must be handled in accordance with the current requirements of the U.S. Environmental Protection Agency (EPA) and state and local government requirements.

2) Capacitors containing mineral oil or isopropylbiphenyl may be disposed of by incineration or other means in accordance with federal, state, and local government regulations.

In any case of scrapping, the serial number or, preferably, the entire nameplate should be returned to the manufacturer for field performance records.

8.16 References

This standard shall be used in conjunction with the following publications:

Andreas, J. C., *Energy-Efficient Electric Motors: Selection and Application*. New York: Marcel Dekker, Inc., 1982.

ANSI C37.06-1987, American National Standard Preferred Ratings and Related Required Capabilities for AC High-Voltage Circuit Breakers Rated on a Symmetrical Current Basis.[3]

[2]Spotcheck Developer, SKD-S2, a product of Magnaflux Corporation of Chicago, or similar product.

[3]ANSI publications are available from the Sales Department, American National Standards Institute, 11 West 42nd Street, 13th Floor, New York, NY 10036, USA.

--`,,`,,`-`-`,,`,,`,`,,`---

Copyright The Institute of Electrical and Electronics Engineers, Inc.
Provided by IHS under license with IEEE
No reproduction or networking permitted without license from IHS Not for Resale

ANSI/NFPA 70-1993, National Electrical Code.[4]

Beck, C. D. and Rhudy, R. G., "Plugging an Induction Motor," *IEEE Transactions on Industry and General Applications,* vol. IGA-6, pp. 10–18, Jan./Feb. 1970.

Bishop, J. G., editor, *Westinghouse Electrical Maintenance Hints*, *Volume 2: Industrial Equipment Maintenance*, Cat. #HB 6001-R, Printing Division, Westinghouse Electric Corp., Forbes Rd., Trafford, PA 15085, copyright 1974.

Demello, F. P., and Walsh, G. W., "Reclosing Transients in Induction Motors with Terminal Capacitors," *AIEE Transactions (Power Apparatus and Systems),* pt. III, vol. 79, pp. 1206–13, Feb. 1961.

IEEE Std C37.012-1979 (Reaff 1988), IEEE Application Guide for Capacitance Current Switching for AC High-Voltage Circuit Breakers Rated on a Symmetrical Current Basis (ANSI).[5]

IEEE Std C37.99-1980, IEEE Guide for the Protection of Shunt Capacitor Banks (ANSI).

IEEE Std 18-1980, IEEE Standard for Shunt Power Capacitors (ANSI).

Jacobs, A. P., and Walsh, G. W., "Application Considerations for SCR DC Drives and Associated Power Systems," *IEEE Transactions on Industry and General Applications,* vol. IGA-4, pp. 396–404, Jul./Aug. 1968.

Marbury, R. E., *Power Capacitors*. New York: McGraw-Hill, 1949.

NEMA MG 1-1993, Motors and Generators.[6]

NEMA MG 2-1989, Safety Standard for Construction and Guide for Selection, Installation, and Use of Electric Motors and Generators.

Stangland, G., "The Economic Limit of Capacitor Application for Load Relief," *Power Engineering*, pp. 78–80, Nov. 1950.

Stratford, R. P., "Capacitors on AC System Having Large Rectifier Loads," *Industrial Power Systems Magazine,* vol. 4, pp. 3–6, Mar. 1961.

---

[4]NFPA publications are available from Publications Sales, National Fire Protection Association, 1 Batterymarch Park, P.O. Box 9101, Quincy, MA 02269-9101, USA.

[5]IEEE publications are available from the Institute of Electrical and Electronics Engineers, Service Center, 445 Hoes Lane, P.O. Box 1331, Piscataway, NJ 08855-1331, USA.

[6]NEMA publications are available from the National Electrical Manufacturers Association, 2101 L Street NW, Washington, DC 20037, USA.

Copyright The Institute of Electrical and Electronics Engineers, Inc.
Provided by IHS under license with IEEE
No reproduction or networking permitted without license from IHS Not for Resale

8.17 Bibliography

[B1] IEEE Std 519-1992, IEEE Recommended Practices for Harmonic Control and Requirements in Electric Power Systems.

[B2] *Electric Utility Engineering Reference Book, Volume 3: Distribution Systems*. Westinghouse Electric Corporation, Trafford, PA, 1965.

[B3] Greenwood, A., *Electrical Transients in Power Systems*. New York: John Wiley & Sons, 1971.

[B4] IEEE Committee Report, "Bibliography on Switching of Capacitive Circuits Exclusive of Series Capacitors," *IEEE Transactions on Power Apparatus and Systems,* vol. PAS-89, pp. 1203–7, July/Aug. 1970.

[B5] Sueker, K. H., Hummel, S. D., and Argent, R. D., "Power Factor Correction and Harmonic Mitigation in a Thyristor Controlled Glass Melter," *IEEE Transactions on Industry Applications,* vol. 25, no. 6, Nov./Dec. 1989.

[B6] Ortmeyer, T. H., Shawky, M., Hammam, A. A., and Shaw, J. M., "Design of Reactive Compensation for Industrial Power Rectifiers," *IEEE Transactions on Industry Applications,* vol. IA-22, no. 3, May/June 1986.

[B7] Lemieux, G., "Power System Harmonic Resonance—A Documented Case," *IEEE Transactions on Industry Applications,* vol. 26, no. 3, May/June 1990.

[B8] Gonzalez, D. A., and McCall, J. C., "Design of Filters to Reduce Harmonic Distortion in Industrial Power Systems," *IEEE Transactions on Industry Applications,* vol. IA-23, no. 3, May/June 1987.

[B9] Chretien, D., Tsou, J., and McGranaghan, M., "Power Factor Correction and Harmonic Control for DC Drive Loads," *EPRI Proceedings, Second International Conference on Power Quality: End-Use Applications and Perspectives,* Sept. 28–30, 1992.

[B10] Lowenstein, M. Z., "Improving Power Factor in the Presence of Harmonics Using Low Voltage Tuned Filters," *IEEE Industry Applications Society Conference Record,* Oct. 7–12, 1990.

--`,,`,,`-`-`,,`,,`,`,,`---

Copyright The Institute of Electrical and Electronics Engineers, Inc.
Provided by IHS under license with IEEE
No reproduction or networking permitted without license from IHS Not for Resale

Chapter 9
Harmonics in power systems

9.1 Introduction

Harmonic currents are a phenomenon that has existed since the beginning of the utilization of alternating current. It is only recently, however, that dealing with harmonics has become a problem to other than a small segment of the electrical industry. The reason is that the majority of loads in electric power systems were linear; that is, the waveshape of the current mirrors the waveshape of the applied voltage ("ohms law" characteristic). For example, incandescent lamps and, generally, induction motor loads, required sinusoidal currents when sinusoidal voltages were applied to them. However, conditions have changed with the introduction of new technology using semiconductor devices. With these versatile devices, we are better able to control the currents to the load in ways that increase the efficiency and/or controllability of the load. The new technologies almost always improve operating and control capabilities, but they also may be introduced for cost savings, such as replacing the more expensive "linear" power supplies with switching-mode devices. They may actually be more expensive than alternate methods of control, but they are much more flexible, as in the case of motor controllers. Use of these devices, however, has resulted in nonlinear loads that require nonsinusoidal currents containing harmonics from the power system.

9.2 Importance of understanding effects of harmonics

As a result of the thrust for more efficient use and control of electrical energy, several new harmonic sources have been created, of which the static power converter is the most important. This device is used in a variety of adjustable-speed drives, switched-mode power supplies, frequency changers for induction heating, and other applications. In addition to these new and additional applications, semiconductor devices are used in static switches that modulate the voltage applied to loads. Examples of these are soft starters for motors, static var compensators (SVC), light dimmers, electronic ballasts for arc-discharge lamps, etc. It has been estimated that by the year 2010, 50% of the power produced will be modified by semiconductors, especially silicon-based technologies, to alter its sinusoidal characteristic in order to improve the efficiency of its use. However, when the power is modified by these semiconductors, the resulting current requirements on the power system are nonsinusoidal.

In addition to these new nonsinusoidal loads, more power factor improvement capacitors are being applied in industrial systems and in electric utility transmission and distribution systems for both voltage control and release of system capacity. With the addition of each new capacitor bank, the system's resonant frequency is lowered (see 9.6). With the resonant frequency lowered, the systems become more susceptible to natural resonance with nonsinusoidal loads. With the lowering of the system resonance, power systems are now becoming more and more impacted by the flow of the characteristic harmonic currents produced by these loads.

--`,,`,,`-`-`,,`,,`,`,,`---

Copyright The Institute of Electrical and Electronics Engineers, Inc.
Provided by IHS under license with IEEE
No reproduction or networking permitted without license from IHS
Not for Resale

Harmonic currents flowing in power circuits can induce harmonic voltages and/or currents in adjacent signal circuits. The present-day use of microprocessors for control of processes and power systems results in equipment using low-level signals that are subject to noise or interference from outside sources.

This is but one instance in which harmonics have had an impact. They can be dealt with, however, as shown by the use of fiber optics to reduce the influence of this noise on control and communication circuits. Also, proper shielding of components in the low-level circuits, and isolation of these circuits from power circuits, can minimize the effect of noise, including harmonics.

9.3 History of harmonic problems and solutions

As previously stated, loads that require nonsinusoidal current have been used since electrical energy came into use. Early arc lamps are one example. Transformers are another type of device that required nonfundamental currents to excite and magnetize the cores. The currents taken by these loads were apparent, but were such a small part of the total currents that they were not a problem in power systems.

Early in the twentieth century, use of the mercury arc rectifier increased for a variety of applications. Some loads served by these devices were large enough and the harmonic current they drew was significant enough that problems arose. Two notable problems involved interference with communication lines. The first concerns the application of these rectifiers to a copper refining process west of Salt Lake City. When that installation was energized, transcontinental telephone conversations occurring at the time were interrupted. The problem was that the ac power system feeding the rectifiers at the plant paralleled the open-wire transcontinental telephone lines passing between the mountain range and the Great Salt Lake. The harmonics caused by the rectifiers induced large voltages in the telephone lines, creating enough noise on the telephone circuits to interrupt conversations.

The second event happened at a mine in Eastern Canada where a rectifier power supply was installed on a mine hoist. When the rectifier was energized, the noise induced into the telephone lines sharing the right-of-way with the power lines was so large that telephone communication was totally disrupted.

These are only two instances of problems relating to the troubles caused by harmonic currents on power systems. In these two instances, current drawn by the static power converter induced currents into the communication lines that produced unequal voltages in the two conductors of the telephone circuit, resulting in the noise.

In the late 1920s and early 1930s, a task force of those impacted by the harmonic currents, manufacturers and utility and telephone representatives, studied the problems caused by harmonic currents. Standards were established for measurement of the noise. In addition, task force members suggested limiting exposure between the utility power lines and the communication lines as a means of eliminating noise produced on the communication lines. This effort is documented by the Edison Electric Institute and AIEE. Between 1930 and 1970,

Copyright The Institute of Electrical and Electronics Engineers, Inc.
Provided by IHS under license with IEEE
No reproduction or networking permitted without license from IHS Not for Resale

electrochemical and electrometallurgical producers, who were the largest users of static power converters, developed technology for minimizing induced noise and limiting harmonic currents being reflected into the utility system. They did this by multiphasing the power converter to eliminate the major portion of the harmonic currents causing the trouble in the communication circuits.

By those actions, the relatively few large users of static power converters were able to control these harmonic currents to the satisfaction of all concerned. Since 1965, however, the introduction of low-cost, high-efficiency semiconductor devices has increased the use of static power converters throughout industry in the form of adjustable speed drives for all types of machinery. Resulting harmonic currents produced in the power system for these many relatively small drives had little effect on the total power system, and caused no problems. However, after the 1973 oil embargo and the rapid increase in energy costs, it has been economical and, in many cases, essential, to utilize these conversion devices on larger systems, as well as to apply power factor improvement capacitors to the system to minimize the increased cost of energy. The widened use of static power converters and the increased use of power factor capacitors have led to problems of capacitor fuse-blowing and increased noise or amplified disturbances on control and power systems.

Of additional concern is the fact that the design of new types of equipment and controllers using solid-state devices assume the existence of a nearly pure sinusoidal voltage source. At distribution and utilization voltage levels, providing a pure sine wave voltage is becoming especially difficult as the propagation of nonlinear loads increases. Thus, as the use and propagation of harmonic sources within the power system becomes more widespread, efforts to control and/or mitigate the impact is of concern to the engineer within the electric utilities and in industry.

9.4 Definition and sources of harmonic currents and voltages

The first step toward understanding how to deal with the problems caused by the interaction of harmonics with power systems or power systems equipment was to settle on a definition of harmonics and a useful means of evaluating them. Over the past few decades this has been done.

9.4.1 Definition of harmonics

A harmonic is defined as a sinusoidal component of a periodic wave or quantity having a frequency that is an integral multiple of the fundamental frequency. Note that, for example, a component of frequency twice that of the fundamental frequency is called the *second harmonic* (IEEE Std 100-1992 [B14])[1].

Thus, on a 60 Hz power system, a harmonic component, *h*, is a sinusoid having a frequency expressed by the following:

[1]The numbers in brackets preceded by the letter B correspond to those of the bibliography in 9.12.

Copyright The Institute of Electrical and Electronics Engineers, Inc.
Provided by IHS under license with IEEE
No reproduction or networking permitted without license from IHS
Not for Resale

$$h = n \cdot 60 \text{ Hz}$$

where n is an integer.

Figure 9-1 illustrates the fundamental frequency (60 Hz) sine wave and its second, third, fourth, and fifth harmonics.

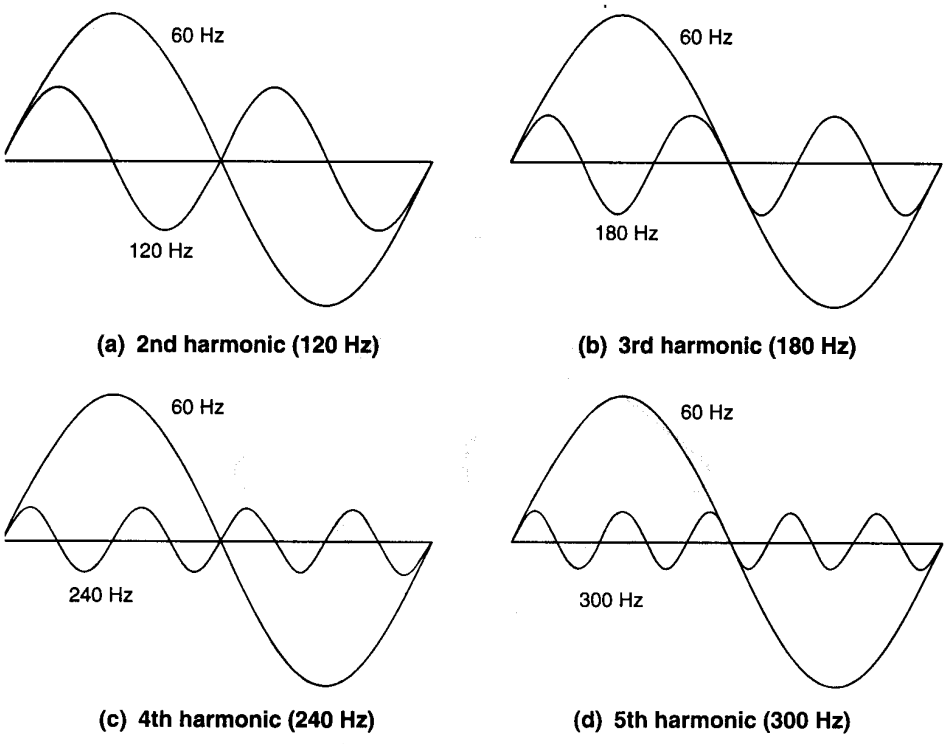

Figure 9-1—Fundamental frequency (60 Hz) sine wave and harmonics

Sinusoidal waves that are not an integral multiple of the fundamental are not harmonics but are defined in terms of the fundamental as per-unit frequencies.

9.4.2 Sources of harmonic current

Harmonic currents are a result of loads that require currents other than a sinusoid. The most common of these are static power converters, although several other loads are nonsinusoidal, such as the following:

— Arc furnaces and other arc-discharge devices, such as fluorescent lamps
— Resistance welders (impedance of the joint between dissimilar metals is different for the flow of positive vs. negative current)

Copyright The Institute of Electrical and Electronics Engineers, Inc.
Provided by IHS under license with IEEE
No reproduction or networking permitted without license from IHS Not for Resale

— Magnetic cores, such as transformer and rotating machines that require third harmonic current to excite the iron
— Synchronous machines (winding pitch produces fifth and seventh harmonics)
— Adjustable speed drives used in fans, blowers, pumps, and process drives
— Solid-state switches that modulate the current-to-control heating, light intensity, etc.
— Switched-mode power supplies, used in instrumentation, PCs, televisions, etc.
— High-voltage dc transmission stations (rectification of ac to dc, and dc to ac invertors)
— Photovoltaic invertors converting dc to ac

9.5 Characteristics of harmonics

Any periodic wave shape can be broken into or analyzed as a fundamental wave and a set of harmonics. This separation or analysis for the purpose of studying the wave shape's effect on the power system is called harmonic analysis.

9.5.1 Harmonic analysis

Figure 9-2 illustrates one period of a distorted wave that has been resolved into its fundamental and two in-phase harmonic components (the third and fifth). The decomposition of a periodic wave in this manner is referred to as Fourier Analysis, after the French mathematician Jean-Baptiste Fourier (1768–1830).

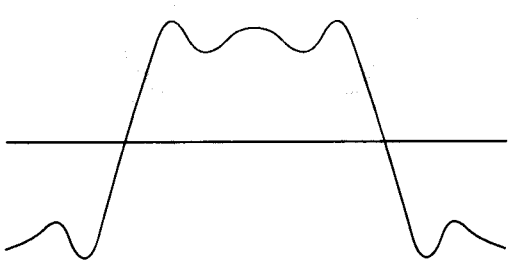

(a) Distorted wave

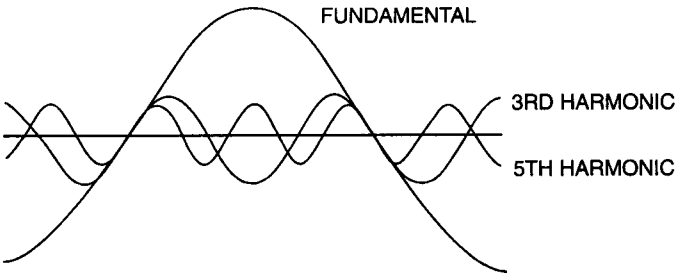

(b) Illustration of the distorted wave as fundamental, plus third and fifth harmonic components

Figure 9-2—Decomposition of a distorted wave

Copyright The Institute of Electrical and Electronics Engineers, Inc.
Provided by IHS under license with IEEE
No reproduction or networking permitted without license from IHS
Not for Resale

9.5.2 Harmonic distortion factor

After the periodic wave has been broken into its sinusoidal components, a quantitative analysis of its parts can be made. The term *distortion factor* is used in this analysis. IEEE Std 100-1992 [B14] defines distortion factor in the following way:

$$\text{df} = \left(\frac{\text{sum of squares of amplitudes of all harmonics}}{\text{square of the fundamental amplitude}}\right)^{1/2} \cdot 100\%$$

The distortion factor can refer to either voltage or current. A more common term that has come into use is *total harmonic distortion* (THD).

IEEE Std 519-1992 [B15] makes recommendations for limits within which current and voltage harmonics should be kept. This standard is a system standard and not an equipment standard, and contains application information. Tables 9-6 and 9-7, which list current and voltage limits for general distribution systems, are provided in 9.11.

9.5.3 Relationship between harmonics and symmetrical components

In balanced three-phase circuits where the currents are equal and in 120° relationship, the harmonics can be considered sequence components. The second harmonic has 240° (60 Hz base) between the phasers, the third 360°, etc. Table 9-1 lists the lower harmonics and their respective sequence.

Table 9-1—Harmonic sequences in a balanced three-phase system

Sequence		
Positive	**Negative**	**Zero**
1	2	3
4	5	6
7	8	9
10	11	12
13	14	15
16	17	18
19	20	21
22	23	24
	etc.	

Copyright The Institute of Electrical and Electronics Engineers, Inc.
Provided by IHS under license with IEEE
No reproduction or networking permitted without license from IHS Not for Resale

If the currents are not balanced, as in an arc furnace, each harmonic has its own set of sequence qualities. For example, the third harmonic, 180 Hz, will have its own set of sequence currents and the third-harmonic currents in each phase will not be additive in the neutral circuit.

9.5.4 Fundamental and harmonic power

Power is the product of inphase current times the voltage, or

$$P_{\text{fundamental}} = V_{\text{fundamental}} \cdot I_{\text{fundamental}} \cos \theta_1$$

In the case of harmonics, it is also the in-phase harmonic current times the harmonic voltage, or

$$P_{\text{harmonic}} = V_{\text{harmonic}} \cdot I_{\text{harmonic}} \cos \theta_{\text{harmonic}}$$

Nonsinusoidal currents can be analyzed by considering the load as a current source for harmonic currents. As these harmonic currents flow through the harmonic impedance of the circuit, they cause a harmonic voltage drop. Since the majority of the impedance is reactive, the amount of harmonic current in phase with the harmonic voltage (harmonic power) is small. The harmonic currents flowing through the resistance of the circuit represent a power loss as

$$P_{\text{h}} = I^2_{\text{harmonic}} \cdot R_{\text{harmonic}}$$

R_{h} can vary with applied harmonics because of skin effect, stray currents, eddy currents, etc.

In rotating machinery, the harmonic flux in the air gap produces torques in the rotor. These torques can either add (positive sequence) or subtract (negative sequence) from the fundamental torque, depending upon the phase sequence of the harmonic. In general, the harmonic fluxes are small and their effects tend to cancel.

9.6 Static power converter theory

It is not the purpose of this section to give a complete tutorial on static power converter theory; however, two basic circuits are discussed: single-phase and three-phase bridge (full-wave) circuits. These two circuits are the basic building blocks for all applications of static power converters in today's equipment. The single-phase circuit is used in electronic devices, personal computers (PCs), television sets, etc. The three-phase circuit is used in power applications such as adjustable speed drives, frequency changers, etc.

These devices can use either diodes or thyristors. Each will be discussed as the loads on the converters and the effect of different types of load on the power system are discussed. The loads can be capacitive, inductive, or resistive.

Triplens are multiples of the third harmonic, including the third. Such currents can exist only when a zero sequence return path, such as a neutral, exists.

Copyright The Institute of Electrical and Electronics Engineers, Inc.
Provided by IHS under license with IEEE
No reproduction or networking permitted without license from IHS
Not for Resale

9.6.1 Single-phase converters

The importance of single-phase converters cannot be underestimated. Figure 9-3 shows the basic circuit, current, and voltage waveforms with a resistive load.

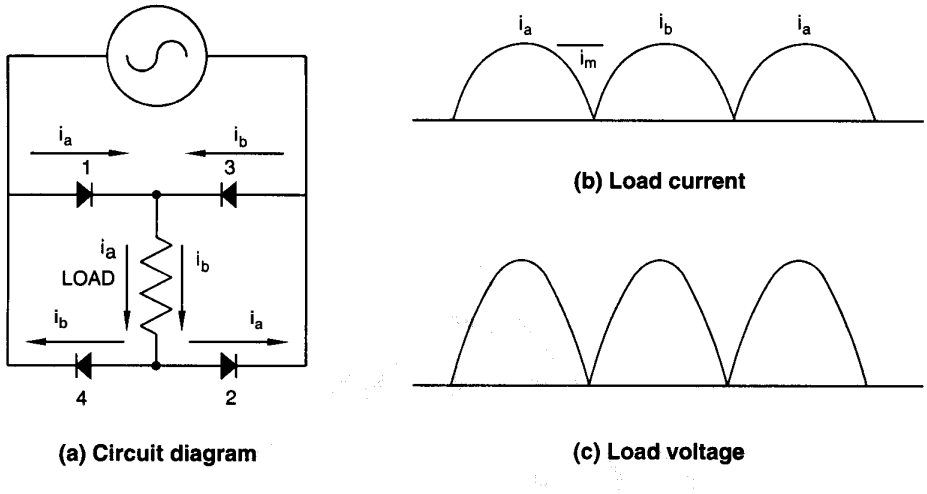

Figure 9-3—Single-phase, full-wave rectifier with resistive load

In the past decade, an adaptation of this circuit has been used in almost all electronic equipment used in residential, commercial, industrial, and military applications. The resistive load-illustrated in figure 9-3(a) has been replaced with a capacitive element. When the load seen by the converter (rectifier) circuit is an energy-storage or voltage-regulating capacitive device, it becomes a "switched-mode" power supply. This adaptation has proven to be an effective means of providing a power supply for electronic equipment that uses silicon chips and/or transistors.

The current drawn by this type of power supply is shown in figure 9-4. Note that the current is *discontinuous*; that is, there is a period of time when no current is flowing in the ac circuit. The capacitor only draws current when it needs to be charged to its rated voltage output. There is an almost constant dc voltage available to the power supply, even though the current flow is discontinuous.

The advantages of this type of power supply are that it is lightweight, efficient, and economical, and that it will provide full voltage output with a wide range of voltage input.

The disadvantage of this type of power supply is that the ac system sees a current that has a high third-harmonic component. Table 9-2 lists the components of harmonic current for a typical switch-mode power supply. Depending upon the load on the capacitor, it could have

Copyright The Institute of Electrical and Electronics Engineers, Inc.
Provided by IHS under license with IEEE
No reproduction or networking permitted without license from IHS Not for Resale

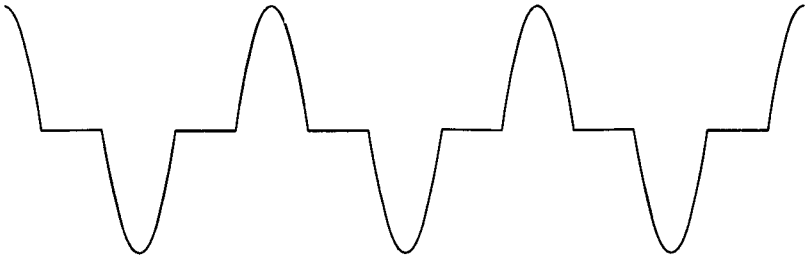

Figure 9-4—AC current feeding a switched-mode power supply

over 80% third-harmonic content. Additionally, but to a much lesser degree, it also contains all the odd harmonic currents.

Table 9-2—Spectrum of a typical switched-mode power supply

Harmonic	Magnitude	Harmonic	Magnitude
1	1.00	9	0.157
3	0.81	11	0.024
5	0.606	13	0.063
7	0.370	15	0.079

9.6.2 Three-phase, six-pulse converters

The three-phase bridge circuit is the basic building block in all three-phase adjustable speed drives and constant voltage rectifier units. The "rectifier" portion of the circuit can be made up of diodes or thyristors. Depending upon whether or not the level of dc bus voltage is to function as an output control, the type of invertor used to convert the dc to variable frequency ac will thus determine if diodes or thyristors are to be used in the rectifier. Figure 9-5 shows the rectifier bridge circuit and the ac and dc voltage output from the rectifier.

The voltage on the dc bus varies around the reflected neutral point of the ac circuit, as shown in figure 9-5(b). This dc voltage is a sixth-harmonic voltage with respect to the neutral of the circuit and, if the neutral is grounded, it is a third-harmonic voltage with respect to ground. This fact is important when there is a machine, such as a dc motor connected to the dc output bus, or an ac machine connected to the invertor which is fed from the dc bus. Impressing this ac ripple voltage on either the dc or the ac machine can produce current through their bearings if proper precautions are not taken. Those precautions include grounding the shaft of the dc machine or adequately grounding the ac machine in order to bleed off this 360 Hz ripple.

Copyright The Institute of Electrical and Electronics Engineers, Inc.
Provided by IHS under license with IEEE
No reproduction or networking permitted without license from IHS
Not for Resale

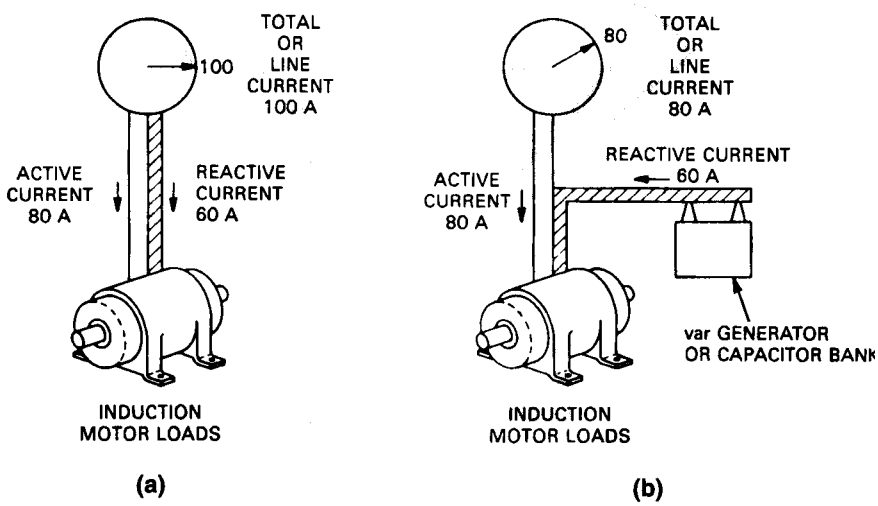

Figure 9-5—Three-phase, six-pulse rectifier

When the load connected to the three-phase rectifier is inductive, then there will be an almost constant dc current flowing from the rectifier. The rectifier elements switch this constant dc current among the three phases of the ac circuit so that for 120° the current is flowing through element #1, positive phase a. For the first 60° of that period, the negative current is flowing through element #6, negative phase b, and for the last 60° through element 2, negative phase c. At the end of the 120° the positive current commutates from phase a to phase b, element #3, which carries the positive current for the next 120°. Again the negative current continues to flow in element #2 for 60° and then commutates to element #4 in negative phase a. This process continues with the current in each phase for 120° of positive conduction followed by 60° of no conduction and the 120° of negative conduction as shown in figure 9-6.

Copyright The Institute of Electrical and Electronics Engineers, Inc.
Provided by IHS under license with IEEE
No reproduction or networking permitted without license from IHS
Not for Resale

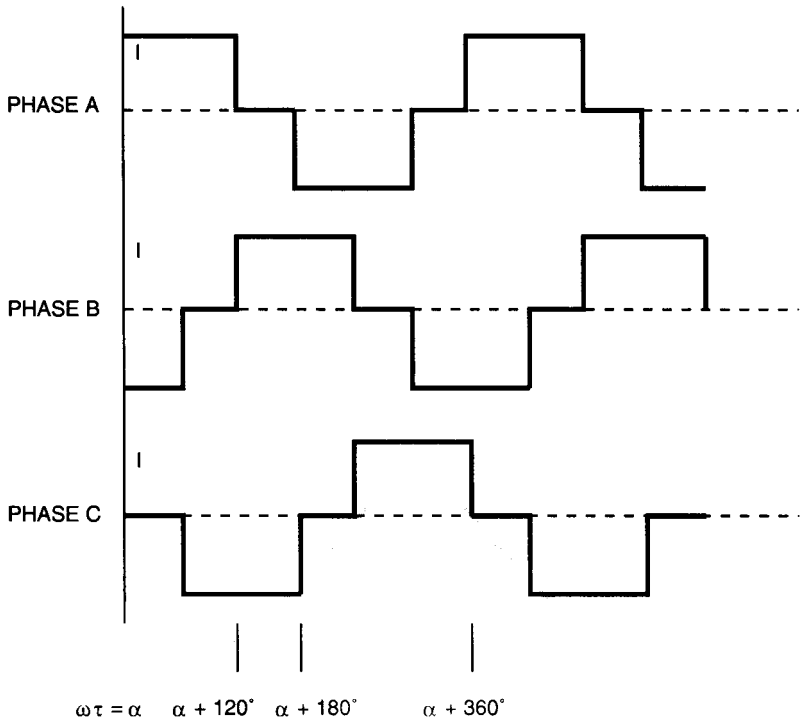

Figure 9-6—Current waveforms in the ac system from an inductive load on a three-phase bridge rectifier circuit

If a Fourier Analysis were made on this square wave, it would contain all the odd harmonic currents except the triplets; that is, those divisible by three.

$$h = kq \pm 1$$

$$I_h = \frac{I_{\text{fund}}}{h}$$

where

h	is the harmonic order
q	is the pulse number of the circuit (six in the case of three-phase bridge)
k	is an integer, 1, 2, 3 . . . etc.
I_{h}	is the amplitude of the harmonic current (rms) of order h
I_{fund}	is the amplitude of the fundamental current (rms value)

The theoretical magnitudes of these harmonic currents would be the reciprocal of the harmonic. For example, the fifth harmonic would be 0.20 per unit of the value of the fundamental current. Because of the inductance in the circuit that is being commutated, the current does not transfer between phase a and b instantaneously so the current wave is more trapezoidal in

Copyright The Institute of Electrical and Electronics Engineers, Inc.
Provided by IHS under license with IEEE
No reproduction or networking permitted without license from IHS
Not for Resale

shape and the theoretical amplitudes of the harmonic currents are a little less than the equation would show. Table 9-3 lists typical values of a six-pulse rectifier circuit.

Table 9-3—Spectrum of a typical three-phase angle, six-pulse rectifier based on a commutating angle of 12° and a firing angle of 30°

Harmonic	Magnitude (%)
5	19.2
7	13.3
11	7.3
13	5.7
17	3.5
19	2.7
23	2.0
25	1.6

9.6.3 Non-characteristic harmonics

The discussions above assume that the harmonic currents drawn by static power converter loads are supplied from a balanced system; that is, systems in which the phase relationship of the voltages is 120° apart and the magnitudes of the voltages are equal. In unbalanced systems, that is, where the supply voltages are not 120° apart or their magnitudes are not equal, other harmonics can be present. Additionally, if the static power converter is not operating correctly, other harmonics can be present. For example, if one phase of the rectifier bridge is not operating, then even order harmonics will be present, particularly the second, eighth, fourteenth, twentieth, etc. These even harmonics are all negative sequence harmonics and, if the converter represents a large portion of the system load served by an isolated generator, these harmonics could cause overheating of the generator rotor.

While the effect is seldom serious, large amounts of even harmonics can saturate transformers or other devices. As indicated in IEEE Std C57.110-1986 [B12], as long as the value of second harmonic current is below the value of the exciting current, no adverse effect on the transformer is to be expected.

Copyright The Institute of Electrical and Electronics Engineers, Inc.
Provided by IHS under license with IEEE
No reproduction or networking permitted without license from IHS Not for Resale

9.7 System response characteristics

The amount of harmonic voltage distortion occurring on any distribution system will depend on the impedance vs. frequency characteristic seen by nonlinear current sources and by the magnitude of those currents. When high nonlinear currents are drawn through system impedances, voltage distortion occurs. For analysis purposes, the nonlinear devices described above can generally be represented as current sources of harmonics.

9.7.1 System short-circuit capacity

The short-circuit capacity which exists at some point in a power system is a very good indicator of the fundamental frequency system impedance at that point. For simple inductive feeders, this is also a measure of the system impedance at harmonic frequencies when that short-circuit capacity is multiplied by the harmonic order. Stiffer systems (those with higher short-circuit capacities) have lower voltage distortion for the same magnitude of harmonic current source than does a weaker system (a system with lower short-circuit capacities).

9.7.2 Capacitor banks and insulated cables

Capacitor banks used for voltage control and/or power factor improvement, as well as insulated cables, are components that have a major effect on power system frequency response characteristics. The manner in which capacitors are connected can cause resonance conditions (both series and parallel) that can magnify harmonic current levels. Capacitor banks are used as a means of supporting voltage for commutation of static power converters. They can be considered in parallel with the system when calculating the commutating reactance, and thus increase the *di*/*dt* of commutation.

The line charging capacitance of transmission lines and insulated cables are also in parallel with the system inductance. Therefore, they are similar to shunt capacitors (power factor improvement capacitors), with respect to affecting system frequency response characteristics. Usually, capacitor banks are dominant in industrial and overhead distribution systems.

9.7.3 Load characteristics

The system load has two important effects on the frequency response characteristics of a system. First, the resistive portion of the load provides damping, which affects the system impedance near resonant frequencies. The resistive load reduces the magnification of, and thus attenuates, harmonic current levels near parallel resonance frequencies.

As a second effect, motor loads and other dynamic loads that contribute to the short-circuit capacity of the system can shift the frequencies at which system resonances occur. These loads appear in parallel to the system short-circuit inductances when calculating resonant frequencies. Motor loads do not provide significant damping of resonant peaks.

Copyright The Institute of Electrical and Electronics Engineers, Inc.
Provided by IHS under license with IEEE
No reproduction or networking permitted without license from IHS
Not for Resale

9.7.4 Balanced vs. unbalanced system conditions

When an industrial system's conditions, such as source impedance, capacitor banks, loading, line characteristics, and harmonic sources, are completely balanced, positive sequence models can be employed to evaluate system frequency response characteristics. Under these balanced conditions, the harmonic currents will have the sequence characteristics shown in Table 9-1.

9.7.5 Resonance conditions

A system resonance condition is the most important factor affecting system harmonic levels. Parallel resonance is a high impedance to the flow of harmonic current, while series resonance is a low impedance to the flow of harmonic current. When resonance conditions are not a factor, a power system has the capability to absorb a significant amount of harmonic current. It is only when these currents see a high impedance due to a condition of parallel resonance that a significant voltage distortion and current amplification will occur. Therefore, it is important to be able to analyze a system's frequency response characteristics in order to avoid having system resonance problems.

9.7.6 Normal flow of harmonic currents

Harmonic currents tend to flow from the nonlinear loads (harmonic sources) toward the point of lowest impedance, usually the utility source, figure 9-7. The impedance of the utility source is usually much lower than parallel paths offered by loads. However, the harmonic current will split depending on the impedance ratios of available paths. Higher harmonic currents will, therefore, flow to capacitors that offer low impedance to high frequencies.

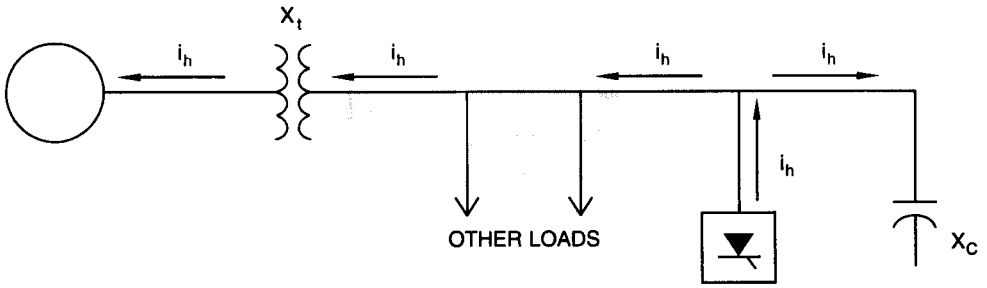

Figure 9-7—Normal flow of harmonic currents

9.7.7 Parallel resonance

Parallel resonance (figure 9-8) occurs when the system inductive reactance and capacitive reactances are equal at some frequency. If the combination of capacitor banks and system inductance result in a parallel resonance near one of the characteristic harmonics generated by a nonlinear load, that harmonic current will excite the "tank" circuit, causing an amplified

Copyright The Institute of Electrical and Electronics Engineers, Inc.
Provided by IHS under license with IEEE
No reproduction or networking permitted without license from IHS Not for Resale

current to oscillate between the energy storage in the inductance and the energy storage in the capacitance. This high oscillating current can cause excessive voltage distortion.

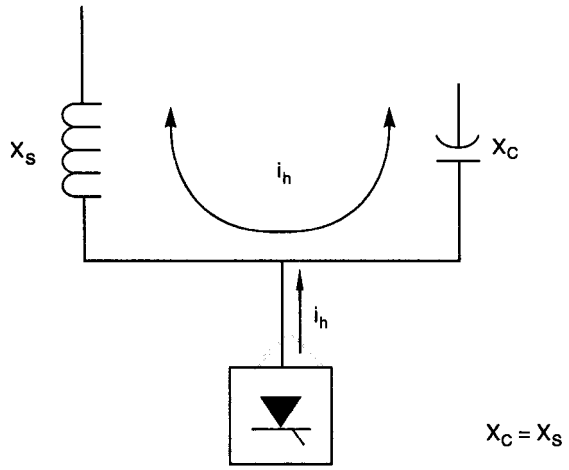

Figure 9-8—Parallel resonance conditions

Frequency at which parallel resonance occurs can be estimated by the following simple equation:

$$H_{\text{resonance}} = \sqrt{\frac{\text{short circuit MVA}}{\text{capacitor bank size in MVA}}} = \sqrt{\frac{X_C}{X_L}}$$

where H is the harmonic order. X_C and X_L are reactances at the fundamental frequency.

9.7.8 Series resonance

Series resonance occurs when an inductive reactance and capacitive reactance that are in series are equal at some frequency. This condition occurs as a result of the series combination of capacitor banks and line or transformer inductances. Series resonance presents a low impedance path to harmonic currents and tends to draw in, or "trap," any harmonic current to which it is tuned. Series resonance can result in high voltage distortion levels between the inductive and the capacitive elements in the series circuit. One example of a possible series resonance circuit is a load center transformer that has capacitors connected to its secondary bus (figure 9-9). This circuit appears as a series circuit when viewed from the primary side of the transformer.

Copyright The Institute of Electrical and Electronics Engineers, Inc.
Provided by IHS under license with IEEE
No reproduction or networking permitted without license from IHS
Not for Resale

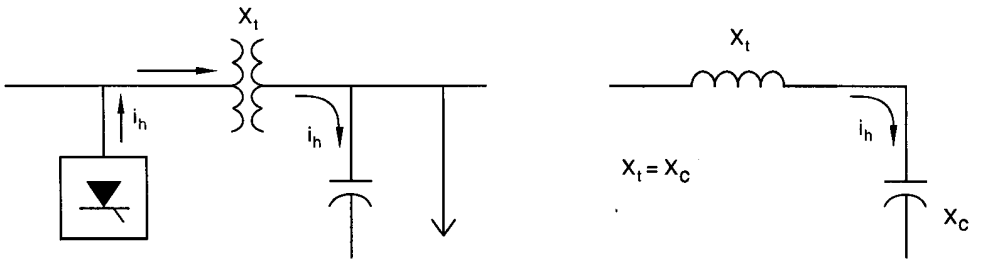

(a) One-line diagram **(b) Impedance diagram**

Figure 9-9—Capacitor bank resulting in series resonance

9.7.9 Effect of system loading

The level of load of a power system does not have a significant effect on system frequency response characteristics, except when the system is operating near the resonant frequencies. The resistive component of the load becomes very important as a damping factor at a system resonance. The resistance path (which offers lower impedance) is taken by harmonic currents when a parallel resonance condition exists. Therefore, higher loading levels on the system tend to lower impedance near a point of parallel resonance. Power system response at varying load levels is illustrated in figure 9-10 for a system that has a parallel resonance point near the fifth harmonic.

9.8 Effects of harmonics

The intent of this section is to provide a broad understanding of the types of problems that can develop when harmonics are present, and the system configurations and operating conditions that may set the stage for harmonic problems. The effects of harmonics can be divided into three general categories:

a) Effects on the power system
b) Effects on loads
c) Effects on communication

9.8.1 Effect on power systems

The most significant impact that harmonics have on power systems is that they can cause additional losses due to heating and can cause control and monitoring equipment to register improperly. Additionally, they can cause voltage distortions. These effects occur mainly as a result of situations of parallel and/or series resonance that have been discussed in 9.7.7 and 9.7.8. When there is no condition of resonance present, the harmonic currents that might exist will flow to the power system's source which, in most cases, is a rotating machine (the utility generator). If the power source is an isolated static device, such as a photovoltaic array with

Copyright The Institute of Electrical and Electronics Engineers, Inc.
Provided by IHS under license with IEEE
No reproduction or networking permitted without license from IHS Not for Resale

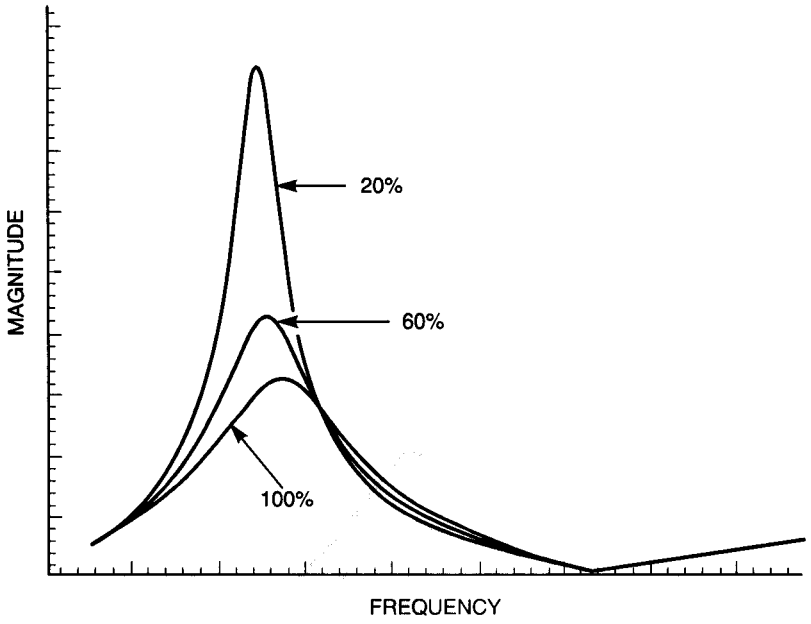

Figure 9-10—System response illustrating effect of load on parallel resonance peak

an invertor or some other source using a static invertor, then the source itself will contribute to the harmonic content.

9.8.2 Effects on loads

Harmonic currents flowing through the power system impedances produce a harmonic voltage drop that results in the harmonic voltages seen in other loads. If any other loads on the power system are a low impedance to any particular harmonic, that load will provide a path for that harmonic current. In general, most loads are a high impedance path to harmonics, so very little harmonic current will flow to loads.

9.8.2.1 Motors and generators

The major effect of serving induction and synchronous rotating machines from power sources that have harmonic voltages is increased heating due to iron and copper losses in the machines at the higher frequencies. The harmonic components of voltage thus affect the machine efficiency, and also can affect the torque developed.

Harmonic currents in a motor can give rise to higher audible noise emission as compared with sinusoidal excitation. The harmonic currents also produce a resultant flux distribution in the air gap, which can cause or enhance phenomena called cogging (the refusal to start smoothly) or crawling (very high slip) in induction motors.

Copyright The Institute of Electrical and Electronics Engineers, Inc.
Provided by IHS under license with IEEE
No reproduction or networking permitted without license from IHS
Not for Resale

Harmonic current pairs, such as the fifth and seventh, have the potential of creating mechanical oscillations in a turbine-generator combination or in a motor-load system. Mechanical oscillations result when oscillating torques, caused by an interaction between harmonic currents and the fundamental frequency's magnetic field, excite a mechanical resonant frequency. For instance, the fifth and seventh harmonics can combine to produce a torsional stimulus on a generator rotor at the sixth harmonic frequency. If a mechanical resonance exists that is close to that frequency of electrical stimulus, high mechanical force can be developed on parts of the rotor.

Additionally, the flow of harmonic currents in the stator produce losses that add to the temperature rise on the stator and in the rotor. The sum effect of harmonics is a reduction in efficiency and life of the machine. Neither reduction is pronounced for normally encountered harmonic content, but this harmonic heating typically reduces performance to 90–95% of that which would be experienced with pure fundamental sine waves applied.

9.8.2.2 Transformers

With the exception that harmonics applied to transformers may result in increased levels of audible noise, the main effect of harmonics on transformers arises from parasitic heating. The harmonic current causes additional copper losses and stray flux losses, and voltage harmonics cause an increase in iron losses. Subclause 10.4.1.1.1 of Chapter 10 deals with these effects in additional detail.

IEEE Std C57.12.00-1987 [B10] and IEEE Std C57.12.01-1989 [B11] propose a limit on harmonics in transformer current with the upper limit of the current distortion factor set at 5% of rated current. These standards also give the maximum rms overvoltages that the transformer should be able to withstand in steady state: 5% at rated load and 10% at no load. The harmonic current at the applied voltage must not result in the total rms voltage exceeding these ratings.

Since many loads today exceed the harmonic current limit of 0.05 per unit specified for "usual service conditions" of liquid and dry transformers, as specified in IEEE Std C57.12.00-1987 [B10] and IEEE Std C57.12.01-1989 [B11], IEEE developed IEEE Std C57.110-1986 [B12]. This recommended practice establishes a method for evaluating the effects of the higher eddy current loss. An equation developed in IEEE Std C57.110-1986 produces a value referred to as the *K* factor and has helped in rating a transformer's ability to carry harmonic currents.

9.8.2.3 Power cables

Cables involved in system resonances, as described in 9.7.7, may be subjected to voltage stress and corona which can lead to dielectric (insulation) failure. Cables which are subjected to "ordinary" levels of harmonic current are prone to parasitic heating.

Figure 9-11 shows typical capacity derating curves for a number of cable sizes for a six-pulse harmonic distribution.

Copyright The Institute of Electrical and Electronics Engineers, Inc.
Provided by IHS under license with IEEE
No reproduction or networking permitted without license from IHS Not for Resale

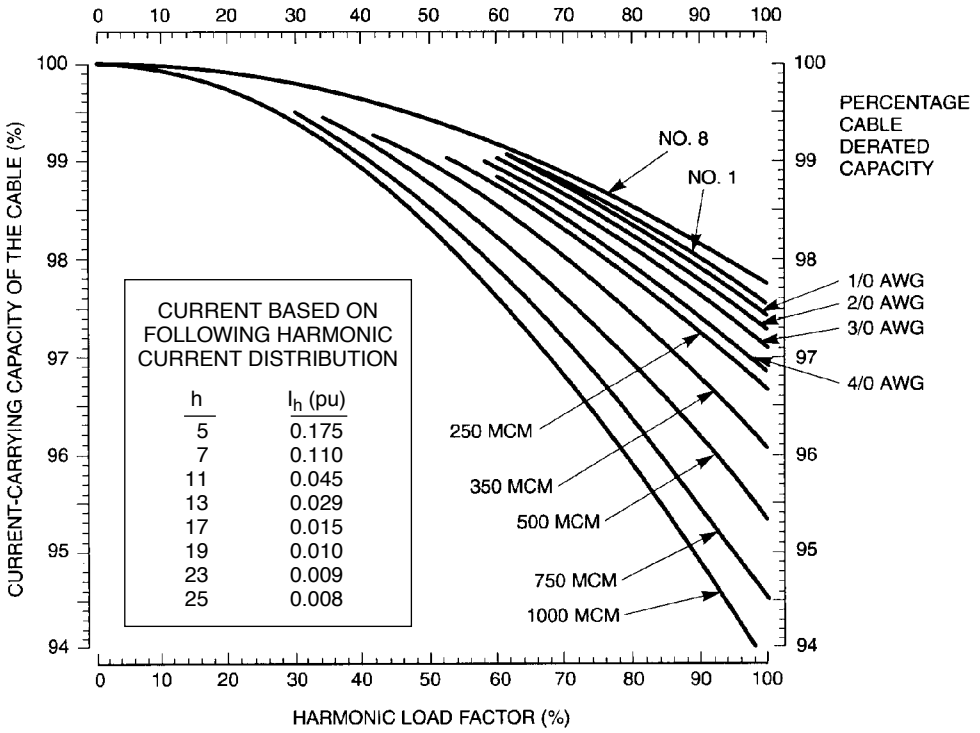

Figure 9-11—Cable derating vs. harmonic with six-pulse harmonic current distribution

Note from the curves the effect on cable current capacity in the sizes used in typical commercial and industrial building distribution systems is small (typical cable sizes less than 500 MCM and THD less than 5–15%). This, of course, is not the case for higher fundamental frequencies such as 400 Hz where the inductive and capacitance factors become more significant.

The flow of nonsinusoidal current in a conductor will cause additional heating over and above that expected for the rms value of the waveform. This is due to phenomena known as *skin effect* and *proximity effect*, both of which vary as a function of frequency as well as conductor size and spacing. As a result of these two effects, the effective alternating-current resistance (R_{AC}) is raised above the direct-current resistance (R_{DC}), especially for larger conductors. When a current waveform rich in high-frequency harmonics is flowing in a cable, the equivalent R_{AC} for the cable is raised even higher, increasing the I^2R_{AC} loss.

9.8.2.4 Capacitors

A major concern arising from the use of capacitors in a power system is the possibility of system resonance. This effect imposes voltages and currents that are considerably higher than would be for the case with no resonance.

Copyright The Institute of Electrical and Electronics Engineers, Inc.
Provided by IHS under license with IEEE
No reproduction or networking permitted without license from IHS
Not for Resale

The reactance of a capacitor bank decreases with frequency, and so the bank acts as a sink for higher harmonic currents. This effect increases the dielectric stresses and heating within the capacitor. Heating is not a problem because of the low-loss capacitor design that uses film and foil. The dielectric stresses are of concern because the harmonic voltages in the capacitor are additive to the fundamental voltage peak. As a result, the dielectric film in the capacitor is subjected to higher voltages than allowed by the design of the capacitor. This causes loss of life. Dielectric failure is a result of fatiguing of the insulation over a period of time.

9.8.2.5 Electronic equipment

Power electronic equipment is susceptible to misoperation caused by harmonic distortion. This equipment often is dependent on accurate determination of voltage zero crossings or other aspects of the voltage waveshape. Harmonic distortion can result in a shifting of the voltage zero crossing or the point at which one phase-to-phase voltage becomes greater than another phase-to-phase voltage. These are both critical points for many types of electronic circuit controls and misoperation can result from these shifts.

Other types of electronic equipment can be affected by transmission of ac supply harmonics through the equipment power supply or by magnetic coupling of harmonics into equipment components. Computers and allied equipment, such as programmable controllers, frequently require ac sources that have not more than 5% harmonic voltage distortion factor, with the largest single harmonic being no more than 3% of the fundamental voltage. Higher levels of harmonics result in erratic, sometimes subtle, malfunctions of the equipment, which can, in some cases, have serious consequences. Instruments can be affected similarly, giving erroneous data or otherwise performing unpredictably. Perhaps the most serious of these are malfunctions of medical instruments. Consequently, many medical instruments are provided with line-conditioned power. Less dramatic interference effects of harmonics can occasionally be observed in radio and television equipment as well as in video recorder and audio reproduction systems.

Since most electronic equipment is located at the low-voltage level of its associated power distribution system, it is frequently exposed to the effects of voltage notching. (Notching occurs during commutation of static power converters when two phases are short-circuited.) Voltage notches frequently introduce frequencies, harmonic and nonharmonic, that are much higher than normally exhibited in 5 kV and higher voltage distribution systems. These frequencies can be in the radio frequency range and, as such, can introduce harmful effects associated with spurious radio frequency (RF). These effects usually are those of signal interference, introduced into logic or communication circuits. Occasionally, the notching effect has sufficient power to overload electromagnetic interference (EMI) filters and similar high-frequency sensitive capacitive circuits.

9.8.2.6 Metering

Metering and instrumentation are affected by harmonic components, particularly if resonant conditions exist that result in high harmonic voltages and currents. Induction disk devices, such as watthour meters, normally see only fundamental current that is in phase with the fundamental voltage. Harmonic currents in phase with harmonic voltage also will register on the

Copyright The Institute of Electrical and Electronics Engineers, Inc.
Provided by IHS under license with IEEE
No reproduction or networking permitted without license from IHS Not for Resale

meter. Since most harmonic voltage is out-of-phase with the harmonic current, the harmonic power is small. Studies have shown that both positive and negative errors are possible with harmonic distortion present, depending on the type of meter under consideration and the harmonics involved. In general, the distortion factor must be severe (>20%) before significant errors are detected. Instrument transformers of 60 Hz, used in both metering and relaying, are not affected by harmonic levels normally encountered (<5 kHz).

9.8.2.7 Switchgear and relaying

As with other types of equipment, harmonic currents can increase heating and losses in switchgear, reducing steady-state carrying capability and shortening the life of some insulating components.

Fuses that are true rms-sensing devices may require a derating because of heat generated by harmonics during "normal" operation. Currently there are no standards for the level of harmonic currents that switching devices or fuses are required to interrupt or to carry. All tests are performed at rated supply frequency.

The Power System Relay Committee of the Power Engineering Society has prepared a report entitled, "Sine Wave Distortions on Power Systems and the Impact on Protective Relaying." The report states the following:

> "Protective relays generally do not respond to any one identifiable parameter such as the rms value of a primary quantity or the fundamental frequency component of that quantity. As a related consideration, the performance of a relay to a range of single frequency inputs is not an indication of how that relay will respond to distorted wave containing those frequencies. Superposition does not apply. Multi-input relays may be more unpredictable than single input relays in the presence of wave distortion. Relay response under distorted conditions may vary among relays having the same nominal fundamental frequency characteristics, not only among different relay manufacturers, but also among different vintages of relays from the same manufacturer."

In general, harmonic levels required to cause the mis-operation of relays are greater than the levels recommended by standards. Distortion factors of 10–20% are generally required to cause problems in relay operation.

The bimetal strip of standard thermal-magnetic molded case breakers, like fuses, also responds to true rms current. As with the perceived "nuisance" opening of fuses, the perceived "nuisance" opening of thermal-magnetic breakers is often actually the desired response to protect equipment from thermal damage.

First- and second-generation solid-state tripping devices on low-voltage circuit breakers responded to peak currents. Since about 1978, these devices have been designed to respond to rms current values. Earlier models may cause nuisance tripping in circuits carrying harmonic currents.

Copyright The Institute of Electrical and Electronics Engineers, Inc.
Provided by IHS under license with IEEE
No reproduction or networking permitted without license from IHS
Not for Resale

9.8.2.8 Static power converters

Converters that use diodes usually are not affected by harmonics. However, converters that use thyristors can be affected when enough distortion is present to interfere with the firing circuits that control the output of the converter. Mitigation techniques discussed below can minimize the interference.

9.8.3 Telephone interference

The harmonic currents and voltages associated with nonlinear loads can induce currents and voltages in communication circuits that parallel the power conductors. Harmonic currents induce currents in the two conductors of communication circuits. When these induced currents flow in the communication circuits they produce voltages. If these voltages are not equal (currents in the two conductors are not equal because of spacing or other differences), they will not cancel and the resultant is noise in the circuit. Communication circuits that have twisted pairs, and/or are shielded, minimize the problem. The problem is most likely to appear when distribution lines and telephone circuits share the same pole line.

9.8.3.1 TIF weighing

The interference can be quantified by the use of telephone influence factor (TIF) weighing. Table 9-4 lists the TIF values based on the 1960 values.

Table 9-4—1960 single-frequency TIF values

Freq	TIF	Freq	TIF	Freq	TIF	Freq	TIF
60	0.5	1020	5100	1860	7820	3000	9670
180	30	1080	5400	1980	8330	3180	8740
300	225	1140	5630	2100	8830	3300	8090
360	400	1260	6050	2160	9080	3540	6730
420	650	1380	6370	2220	9330	3660	6130
540	1320	1440	6650	2340	9840	3900	4400
660	2260	1500	6680	2460	10 340	4020	3700
720	2760	1620	6970	2580	10 600	4260	2750
780	3360	1740	7320	2820	10 210	4380	2190
900	4350	1800	7570	2940	9820	5000	840
1000	5000						

--`,,`,,`-`-`,,`,,`,`,,`---

Copyright The Institute of Electrical and Electronics Engineers, Inc.
Provided by IHS under license with IEEE
No reproduction or networking permitted without license from IHS Not for Resale

Evaluation of the problem can be stated in either current or voltage terms. The current term is *I·T* Product. It is calculated by taking the root sum squared (rss) value of the sum of the squares of the *I·T* Products. *I* is the individual harmonic current, and *T* is the TIF weighing value of that frequency. *I·T* Products of less than 10 000 should not be a problem. The exception to that is in some Canadian Provinces where the value is limited to 1500. The equivalent voltage value is kV·*T* Product. It is calculated in a similar fashion. Figure 9-12 is a curve of the TIF weighing values.

$$I \cdot T \text{ Product} = \sqrt{\sum_{H=1}^{H=50} [I_h \cdot (TIF)_h]^2}$$

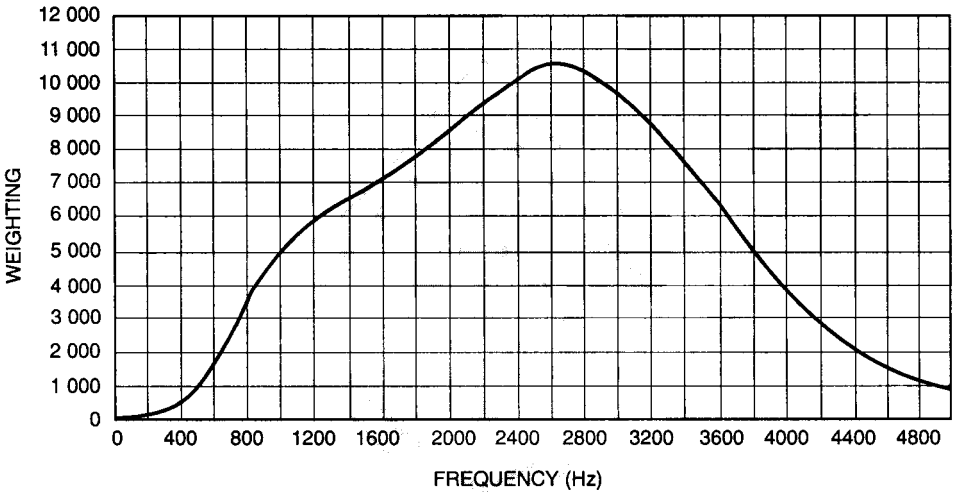

Figure 9-12—1960 TIF weighing values

Notice that the curve peaks at 2600 (43rd harmonic). What this says is that the lower harmonics associated with static power converters usually are not a problem in telephone interference. The curve is based on the value of 1000 Hz having a TIF of 5000.

9.8.3.2 Residual or ground return currents

Telephone circuits are particularly susceptible to the influence of ground return currents. In rural areas when power or telephone circuits use a ground return, the large inductive loop can have a large influence on the noise produced in telephone circuits. Particular care should be used to minimize nonlinear loads in this case.

9.8.3.3 Commutation effects

Commutation notches can produce harmonics that are near the 43rd harmonic where the TIF values peak. Good practice is to isolate communication circuits from power circuits.

Copyright The Institute of Electrical and Electronics Engineers, Inc.
Provided by IHS under license with IEEE
No reproduction or networking permitted without license from IHS Not for Resale

9.9 Harmonic analysis

In the analysis of a power system with respect to harmonic currents, it is important to determine if parallel resonance exists between the power system inductance and the capacitance in the circuit. This condition can consist of either power factor improvement capacitors and/or the capacitance of lines and cable. Harmonic analysis is also used to determine the effectiveness of filters.

9.9.1 Harmonic load flow

The harmonic load flow program is the basic analysis tool used in performing harmonic studies. It has the capability of calculating the distribution of harmonic currents in the power system and determining harmonic voltage on the buses. The program's greatest use is in calculating the system impedance at any point and at any frequency in the network, specifically at those locations at which harmonic current will be generated. Most harmonic load flow programs are similar to familiar load flow and short-circuit programs. There are some important differences, however. They are as follows:

a) The harmonic load flow program must provide solutions over a range of frequencies. These frequencies should not be limited to integer harmonics, but should include intermediate points. It is necessary to "sweep" a range of frequencies to clearly identify resonant frequencies that might be close to characteristic orders of harmonic-producing loads. Frequencies every 6–10 Hz should be used.
b) The network elements—transmission lines, transformers, reactors, capacitors, cable, etc.—will have impedances that change with frequencies. The program must cater to this requirement by constructing the network model at each frequency of interest during the solution. Both the reactance and the resistance should be modeled as a function of frequency to get an accurate result. Long line equations for distribution and transmission lines should be used if telephone interference or the effect of higher frequencies is to be studied.
c) Industrial power systems normally are balanced within their three phases. A simple, positive-sequence, single-phase representation can therefore give satisfactory answers. However, if there is unbalanced loading or impedances in the system, a full three-phase representation must be used.

The program should be able to handle several harmonic sources simultaneously. Depending on the particular program, the output will include the following:

— Harmonic voltages and distortion factors on each bus
— Branch $I \cdot T$ Products
— Bus kV$\cdot T$ Products (TIF)
— Branch harmonic current and distortion factors
— Capacitor bank or filter loading
— System impedance vs. frequency characteristic

The quality of current filtering will be a function of the system impedance relative to the filter impedance.

Copyright The Institute of Electrical and Electronics Engineers, Inc.
Provided by IHS under license with IEEE
No reproduction or networking permitted without license from IHS Not for Resale

9.9.2 Useful "rules of thumb"

Except for the possibility that they might excite parallel resonant network configurations, harmonic currents produced by static power converter and other nonlinear loads are not troublesome. The parallel resonance of a circuit can be quickly estimated by the following:

$$H_p = \sqrt{\frac{\text{MVA}_{SC}}{\text{Mvar}_C}}$$

where

H_p is the harmonic order (per-unit frequency) at parallel resonant frequency
MVA_{SC} is the system short-circuit capacity
Mvar_C is the power factor improvement capacitor

Likewise, the harmonic current level or size of the nonlinear load with respect to the power system can be calculated as follows:

$$SCR = \frac{\text{MVA}_{SC}}{\text{MW}_{converter}}$$

If the *SCR* (short-circuit ratio) is less than 20, and there is a parallel resonance condition near a characteristic harmonic of the nonlinear load, there will probably be a problem. A study should be made to determine the possible addition of harmonic filters to eliminate any problem.

9.10 Mitigation techniques

There are three main techniques used to reduce or, more accurately, to control the flow of harmonic currents from nonlinear loads in industrial and commercial power systems. These are as follows:

a) Use of shunt filters
b) Use of multipulse static power converters or phase-shifting transformers
c) Harmonic current injection

9.10.1 Shunt filters

Shunt filters are the most common method used to control the flow of harmonic currents. They are designed as a series combination of reactors (inductance) and capacitors (capacitance). The shunt filter also is referred to as a "trap" because it absorbs the harmonic current to which it is tuned.

Copyright The Institute of Electrical and Electronics Engineers, Inc.
Provided by IHS under license with IEEE
No reproduction or networking permitted without license from IHS
Not for Resale

The most common design of shunt filter is a single-tuned filter. The resonant frequency is given by the following expression:

$$f_o = \frac{1}{2\pi\sqrt{LC}} = f_1\sqrt{\frac{X_C}{X_L}}$$

where

f_o is the resonant frequency
L is the inductance of the filter
C is the capacitance of the filter
X_C is the capacitive reactance of the filter
X_L is the inductive reactance of the filter
f_1 is the fundamental frequency

The value of the resistance R determines the quality factor Q of the filter and is equal to the ratio of the inductive or capacitive reactance, at resonance, to the resistance. Typical values of Q range from 15 to 80 for filters used in industrial and commercial applications. Low-voltage (480 and 600 V) filters use gapped iron cores which have higher losses and have Q values on the low end. Medium-voltage (4.16 and 13.8 kV) filters have Q values in the upper range. The X/R ratios of low-voltage systems range from 3 to 7 and so do not have high amplification in parallel resonant conditions. Although low-voltage filters have higher per unit losses, they also provide more damping to any oscillation that might be present.

The process of designing a shunt filter is a compromise between several factors. In industrial and commercial systems it is not as necessary to account for many of the factors that are important in large utility installations that use filters for HVDC transmission and SVC (static var compensators). The factors that are important, however, are low maintenance, economics, and reliability. The simplest filter design that does the job is the best.

The steps to a filter design are as follows:

a) Choose the value of capacitance needed to improve the power factor to eliminate any penalty. This usually is about 0.95.
b) Select a reactor to series tune the capacitor to the desired harmonic. This usually is the fifth harmonic in system where the source of harmonic current is from static power converters. In arc furnace applications, multiple single-tuned filters are used.
c) Calculate the peak voltage across the capacitor and the total rms current in the reactor.
d) Choose standard components to meet the duty that is placed upon them.

An example of the calculations for designing a fifth harmonic filter is discussed here. Assume a 13.8 kV system that needs 4.5 Mvar of capacitance to improve the power factor. The system has 8 MW of static power converter load. This then has determined the capacitor size for the filter. It also specifies the harmonic current that the filter must absorb.

Copyright The Institute of Electrical and Electronics Engineers, Inc.
Provided by IHS under license with IEEE
No reproduction or networking permitted without license from IHS Not for Resale

First calculate the reactance of the capacitor bank. The *X*/*R* ratio of the capacitor is in the order of 5000 so the resistance can be ignored.

$$X_C = \frac{\mathrm{kV}^2}{\mathrm{Mvar}_C} = \frac{13.8^2}{4.5} = 42.1\Omega$$

Next calculate the reactance of the reactor. Air-core reactors have an *X*/*R* ratio in the order of 30 to 80. Again, the resistance can be ignored. *H* is the harmonic order.

$$X_{L_H} = \frac{X_C}{H^2} = \frac{42.1}{25} = 1.69\Omega$$

Next is to calculate the peak voltage across the capacitor and the rms current through the reactor. The peak voltage across the capacitor is the arithmetic sum of the fundamental voltage and the harmonic voltage to which it is tuned.

$$I_1 = \frac{V_{L-N}}{X_C - X_L} = \frac{7960}{42.1 - 1.69} = 197 \text{ A}$$

$$I_5 = \frac{1}{H}\,\frac{\mathrm{kW}_{\mathrm{load}}}{\sqrt{3}\mathrm{kV}_L} = \frac{1}{5}\,\frac{8000}{\sqrt{3}\cdot 13.8} = 67 \text{ A of fifth harmonic}$$

$$V_C = I_1 X_C + I_5 X_{C_5} = 197 \cdot 42.1 + 67 \cdot 8.42 = 8858 \text{ V}$$

If 8660 V capacitors are used (line to neutral of 15 000 V system), then the per-unit voltage on the capacitor would be as follows:

$$V_{pu} = \frac{8858}{8660} = 1.023 \text{ per-unit voltage on the capacitor}$$

The rms current through the reactor is the rms sum of all the harmonic currents that will pass through the reactor. This includes not only the harmonic to which it is tuned, but also that portion of the other harmonics that will be absorbed in the filter.

$$I_{\mathrm{rms}} = \sqrt{I_1^2 + I_5^2} = 260 \text{ A}$$

Since it is not known without a harmonic load flow program how much of the other harmonic currents will flow into the filter, a factor of 1.15 to 1.2 should be used to estimate the total rms current. These factors include the additional rms current referred to in Step b of filter design. Using 1.2, the rms current through the reactor will be 313 A. Specify 320 A.

Copyright The Institute of Electrical and Electronics Engineers, Inc.
Provided by IHS under license with IEEE
No reproduction or networking permitted without license from IHS
Not for Resale

The total vars from the filter will no longer be 4.5 Mvar. Since the voltage rating of the capacitors have been increased, they are being applied on a lower voltage system, so

$$\text{Mvar}_C = \text{Mvar}_{\text{rated}} \frac{\text{kV}_S^2}{\text{kV}_C^2} = 4.5 \frac{7.960^2}{8.660^2} = 3.80 \text{ Mvar}$$

If 300 kvar single-phase capacitors were chosen to be used, 15 units, five per phase, would be rated 4.5 Mvar at 8660 V, but at 7960 V they would only furnish 3.80 Mvar. Therefore, six units per phase should be used or a nameplate value of 5.4 Mvar with a net of 4.56 Mvar.

The filter needs to be recalculated based on the new value of the capacitor bank based on both the new voltage rating and the new Mvar. It will be shown that the per-unit voltage on the capacitor with the larger bank is a little lower, or 1.022 per unit. The impedance to harmonic currents is also lower. The filter tuning is relatively wider near the tuning point so that as the temperature changes the tuning point will change a little but the filter still will be efficient in controlling the flow of fifth harmonic and other harmonic currents.

Standard capacitors have been chosen for the filter so the cost will be minimum. Since reactors usually must be designed for each application, their ratings should be selected to meet the unit's specific needs.

9.10.2 Multipulse converters

Harmonics can be reduced by phase multiplication. If m six-pulse rectifier sections

- Have the same transformer ratios
- Have transformers with identical impedances
- Are phase-shifted exactly $60 \div m$ degrees from each other
- Are controlled at exactly the same delay angle
- Share the load current equally

then the only harmonics present will be of the following order:

$$h = kq \pm 1$$

where

h	is the harmonic order
q	is now $6m$
m	is the number of six-pulse rectifiers
k	is an integer (e.g., 1, 2, 3, …)

No two rectifier sections are identical in all these respects; therefore, in practice, the noncharacteristic harmonics will always be present to the degree that the above requirements are not met.

Copyright The Institute of Electrical and Electronics Engineers, Inc.
Provided by IHS under license with IEEE
No reproduction or networking permitted without license from IHS Not for Resale

For example, two rectifier sections phase shifted by 30° result in a 12-pulse rectifier with the lowest harmonic being the 11th, while three rectifiers sections phase shifted 20° results in 18-pulse rectifier with the lowest harmonic being the 17th, etc. This technique has been used for eliminating harmonic problems in electrochemical and electrometallurgical industries for decades. Even if all the above criteria are not met, alternating delta-delta transformer connections with delta-wye connections will eliminate some of the fifth and seventh harmonic currents when there are several drives operating in a facility.

9.10.3 Harmonic cancellation by harmonic injection

Harmonic currents can be reduced or cancelled by injecting equivalent currents that are phase-shifted 180°. This technique, which is called *active filtering*, has been used in the laboratory but is not yet practical in an industrial environment.

9.11 Industry standards

The main industry standard used for harmonics in power systems is IEEE Std 519-1992 [B15]. This standard has been developed through the IEEE Industry Applications Society and the IEEE Power Engineering Society. Through the joint effort of these two societies, IEEE Std 519-1992 suggests limits on the harmonic currents that a user can induce back into the utility power system and also specifies the quality of the voltage that the utility should furnish the user.

Table 9-5 lists the harmonic current limits based on the size of the load with respect to the size of the power system to which the load is connected. The ratio I_{SC}/I_L is the ratio of the short-circuit current available at the point of common coupling (PCC) to the maximum fundamental load current. It is recommended that the load current I_L be calculated as the average current flow during the maximum demand for the preceding twelve months. The standard suggests that the amount of current taken by a facility would have a bearing on the amount of harmonics it could interject into the utility's distribution system. Smaller-sized facilities are permitted to interject larger percentages of harmonics than are larger consumers. This protects other utility customers on the same feeder, as well as the utility company, since the utility is required to furnish a certain quality of voltage to its customers.

The requirement of the utility to furnish a good quality of voltage is listed in table 9-6.

There are no accepted standards now in the U.S.A. or Canada that set harmonic limits for individual equipment. There is still a debate as to the economic trade-off between designing individual equipment to limit harmonic currents or controlling the flow of harmonic current on a system basis. There are arguments pro and con on the issue, particularly when engineering expertise is not available at a user's facility to control the harmonic currents on a system basis.

Copyright The Institute of Electrical and Electronics Engineers, Inc.
Provided by IHS under license with IEEE
No reproduction or networking permitted without license from IHS
Not for Resale

Table 9-5—Current distortion limits for general distribution systems (120 V through 69 000 V)

Maximum harmonic current distortion (% of I_L)						
Individual harmonic order (odd harmonics)						
I_{SC}/I_L	<11	11≤ *h*<17	17≤ *h*<23	23≤ *h*<35	35≤*h*	TDD
<20*	4.0	2.0	1.5	0.6	0.3	5.0
20<50	7.0	3.5	2.5	1.0	0.5	8.0
50<100	10.0	4.5	4.0	1.5	0.7	12.0
100<1000	12.0	5.5	5.0	2.0	1.0	15.0
>1000	15.0	7.0	6.0	2.5	1.4	20.0

NOTES
1—Even harmonics are limited to 25% of the odd harmonic limits above.
2—Current distortions that result in a direct current offset, e.g., half-wave converters, are not allowed.
3—Where
I_{SC} is the maximum short-circuit current at PCC
I_L is the maximum demand-load current (fundamental frequency component) at PCC

*All power generation equipment is limited to these values of current distortion, regardless of actual I_{SC}/I_L.

Table 9-6—Voltage distortion limits

Bus voltage at PCC	Individual voltage distortion (%)	Total voltage distortion THD (%)
69 kV and below	3.0	5.0
69.001 kV through 161 kV	1.5	2.5
161 kV and above	1.0	1.5

NOTE—High-voltage systems can have up to 2.0% THD where the cause is an HVDC terminal that will attenuate by the time it is tapped for a user.

Copyright The Institute of Electrical and Electronics Engineers, Inc.
Provided by IHS under license with IEEE
No reproduction or networking permitted without license from IHS Not for Resale

9.12 Bibliography

[B1] AIEE Committee Report, "Inductive Coordination Aspects of Rectifier Installations. *AIEE Transactions,*" vol. 65, 1946, pp. 417–436.

[B2] Amoli, M. E., and Florence, T., "Power Factors and Distortion Characteristics of Energy Efficient Lamps," *IEEE Transactions on Power Delivery,* vol. 4, no. 3, July 1989, pp. 1965–1969.

[B3] Christensen, E. F. et al., "Analysis of Rectifier Circuits," *AIEE Transactions,* vol. 63, pp. 1048–1058.

[B4] Douglass, D. A., "Current Transformer Accuracy with Asymmetric and High Frequency Fault Currents," *IEEE Transactions on Power Apparatus and Systems*, vol. PAS-100, no. 3, Mar. 1981.

[B5] Douglass, D. A., "Potential Transformer Accuracy at 60 Hz Voltages Above and Below Rating and at Frequencies Above 60 Hz," *IEEE Transactions on Power Apparatus and Systems,* vol. PAS-100, no. 3, Mar. 1981.

[B6] Duffey, C. K., and Stratford, R. P., "Update of Harmonic Standard IEEE 519, IEEE Recommended Practices and Requirements for Harmonic Control in Electric Power Systems," IEEE Paper no. PCIC-88-7.

[B7] Faucett, M. A., and Keener, C. A., "Effect of Harmonics on Watthour Meter Accuracy," *Electrical World,* pp. 82–84, Oct. 27, 1945.

[B8] Fuller, J. F., Fuchs, E. F., and Roesler, D. J., "Influence of Harmonics on Power Distribution System Protection," *IEEE Transactions on Power Delivery,* vol. 3, no. 2, Apr., 1988.

[B9] IEEE Std C34.2-1968 (Reaff 1973), Practices and Requirements for Semiconductor Power Rectifiers.[2]

[B10] IEEE C57.12.00-1987, IEEE Standard General Requirements for Liquid-Immersed Distribution, Power, and Regulating Transformers (ANSI).

[B11] IEEE C57.12.01-1989, IEEE Standard General Requirements for Dry-Type Distribution and Power Transformers, Including Those with Solid Cast and/or Resin-Encapsulated Windings (ANSI).

[B12] IEEE Std C57.110-1986, IEEE Recommended Practice for Establishing Transformer Capability When Supplying Nonsinusoidal Load Currents (ANSI).

[B13] IEEE Std 18-1980 (Reaff 1991), IEEE Standard for Shunt Power Capacitors (ANSI).

[2]IEEE Std C34.2-1968 has been withdrawn and is out of print; however, copies can be obtained from the IEEE Standards Department, IEEE Service Center, 445 Hoes Lane, P.O. Box 1331, Piscataway, NJ 08855-1331, USA.

--`,,`,,`-`-`,,`,,`,`,,`---

Copyright The Institute of Electrical and Electronics Engineers, Inc.
Provided by IHS under license with IEEE
No reproduction or networking permitted without license from IHS
Not for Resale

[B14] IEEE Std 100-1992, IEEE Standard Dictionary of Electrical and Electronics Terms.

[B15] IEEE Std 519-1992, IEEE Recommended Practices and Requirements for Harmonic Control in Electric Power Systems.

[B16] Kimbark, E. W., *Direct Current Transmission*, vol. I. New York: Wiley-Interscience, 1971 (see Ch. 8, Harmonics and Filters, which includes a list of 62 references).

[B17] Miller, T. J. E., editor, *Reactive Power Control in Electrical Systems*. New York: John Wiley & Sons, 1982.

[B18] Pelly, B. R., *Thyristor Phase-Controlled Converters and Cycloconverters*. New York: John Wiley, 1971.

[B19] Purkayastha, I., and Savoie, P., "RMS Digital Trips Offer Increased Accuracy and Reliability Advances in Low-voltage Circuit Breaker Trip Technology," *IEEE Transactions on Industry Applications*, vol. 26, no. 1, Jan./Feb. 1990.

[B20] Read, J. C., "The Calculation of Rectifier and Converter Performance Characteristics," *Journal IEE,* vol. 92, pt. II, pp. 495-509, 1945.

[B21] Smith, Jr., R. L., and Stratford, R. P., "Application Considerations in Handling Effects of SCR Generated Harmonics in Cement Plants," *IEEE Transactions on Industry Applications,* vol. IA-17, no. 1, Jan./Feb. 1981.

[B22] Stratford, R. P., "Analysis and Control of Harmonic Current in Systems with Static Power Converters," *IEEE Transactions on Industry Applications,* vol. IA-17, no. 1, Jan./Feb. 1981.

[B23] Stratford, R. P., "Harmonic Pollution on Power Systems—A Change in Philosophy," *IEEE Transactions on Industry Applications,* vol. IA-16, no. 5, Sept./Oct. 1980.

[B24] Stratford, R. P., "Rectifier Harmonics in Power Systems," *IEEE Transactions on Industry Applications*, vol. IA-16, no. 2, Mar./Apr. 1980.

[B25] Wave Distortion on Consumer's Interconnection Working Group, "The Impact of Sine-Wave Distortions on Protective Relays," *IEEE Transactions on Industry Applications,* vol. IA-20, no. 2, Mar./Apr., 1984.

--`,,`,,`-`-`,,`,,`,`,,`---

Copyright The Institute of Electrical and Electronics Engineers, Inc.
Provided by IHS under license with IEEE
No reproduction or networking permitted without license from IHS Not for Resale

Chapter 10
Power switching, transformation, and motor control apparatus

10.1 Introduction

This chapter provides information on the requirements for and application of major apparatus utilized in an industrial electric distribution system. More detailed information on this type of apparatus is available from the American National Standards Institute (ANSI), the National Electrical Manufacturers Association (NEMA), and nationally recognized testing laboratories (NRTLs), such as Underwriters' Laboratories, Inc., (UL) or Factory Mutual (FM), as well as from manufacturers' publications.

The engineer should make basic decisions in the choice of equipment for a particular electric system. The decision-making process should entail all those factors involved in designing and maintaining an electric power system, such as safety, protection, continuity of service, reliability, security, protective coordination, initial installed cost, procurement time to meet the schedule, flexibility, staffing, and cost for operating and maintenance. Energy cost, conservation, and environmental protection should be considered in initial plant design and equipment. For information related to energy cost and conservation, refer to Chapter 14 of this standard.

10.1.1 Equipment installation

Electric equipment should be installed in a manner that is safe and yet readily accessible to qualified personnel. Sufficient working space should be provided and maintained about all electric apparatus to permit ready and safe operation and maintenance of such equipment. Minimum working clearances around electrical equipment as required by the National Electrical Code (NEC) (ANSI/NFPA 70-1993) [B15][1] shall be considered for design and installation.

Installations in industrial plants require that adequate aisles, hatchways, wall openings, etc., be provided for easy removal and replacement of all electric equipment. For medium-voltage switching equipment, extreme care should be exercised in setting, grouting, aligning, and leveling the floor channels in order to prevent stressing insulators and bus structures and to provide for easy insertion and removal of the apparatus. Floor area in front of switchgear should be level or have only a moderate slope away from the equipment for adequate drainage.

Special attention should be given to the floor under and in front of any equipment that is required to roll in and out of the enclosure. More detailed installation procedures are given in NEMA PB 2.1-1991 [B46]. If equipment is to be stored or installed in locations where internal condensation may occur, suitable internal heating should be provided (NEMA PB 2.1-1991, Section III).

[1]The number in brackets preceded by the letter B correspond to those of the bibliography in 10.8.

Copyright The Institute of Electrical and Electronics Engineers, Inc.
Provided by IHS under license with IEEE
No reproduction or networking permitted without license from IHS
Not for Resale

Article 450 of the NEC [B15] outlines the installation requirements for transformers of various types. In some industrial plants, the unit substation transformer is located outside a pressure-ventilated switchgear room with a secondary throat connection for buswork through the wall. This pressure-ventilated switchgear room may also house motor-control centers, panelboards, and other electrical and electronic equipment in addition to the switchgear. This particular type of design would be used for the following reasons:

a) Protection of electric equipment from the accumulation of dirt, dust, and other foreign material;
b) Use of less expensive and more readily maintainable general-purpose electric equipment enclosures, where appropriate;
c) Prevention of access by unauthorized people.

10.1.2 Maintenance, testing, and safety

Maintenance, testing, and safety of an operating plant must be considered primary factors in the design of any electrical system.

An effective preventive maintenance program should sustain production at required levels, protect valuable investment, and reduce down time and maintenance costs. Planned maintenance should include a series of tasks to be performed on each unit of equipment in order to detect areas of potential failure and to provide a warning to plan for necessary repairs or replacement. The tasks should be performed either on a regularly scheduled basis or on the basis of time in service, cycles of operation, or having interrupted fault current. Record keeping is an essential part of the planned maintenance program. Inherent with any maintenance program is the testing of electric equipment and appropriate safety precautions for personnel and equipment. Chapter 5 discusses methods of testing protective equipment, such as circuit breakers, relays, etc. Testing procedures for other equipment are found in appropriate standards of the IEEE, the American National Standards Institute (ANSI), National Fire Protection Association (NFPA), National Electrical Manufacturers Association (NEMA), and the National Electrical Testing Association (NETA), as well as in manufacturers' literature.

10.1.3 Heat losses

The heat generated by power losses in electric equipment, particularly transformers, motors, rectifiers, and motor control centers, should be considered in the initial design of a project. An estimate of the power losses that show up as heat should be developed and added to the cooling requirements of the building. Table 10-1 lists the range of losses in electric equipment. Heat losses for specific equipment should be obtained from the manufacturer.

Exhausting air from the equipment location and allowing cooler (even if filtered) air to enter may cause internal condensation and possibly create a hazardous atmosphere in the building. Alternate methods include air conditioning, ventilation with dehumidification, higher efficiency equipment, or locating the major heat-producing items outdoors. The amount of cooling air should be kept at the required minimum by use of the thermally controlled equipment. References are included in 10.8 to aid in evaluating the effects of solar radiation and losses in power systems.

Copyright The Institute of Electrical and Electronics Engineers, Inc.
Provided by IHS under license with IEEE
No reproduction or networking permitted without license from IHS Not for Resale

Table 10-1—Range of losses in power system equipment

Component	Percent energy loss* (full load)
Outdoor circuit breakers (15–230 kV)	0.002–0.015
Generators	0.09–3.50
Medium-voltage switchgear (5 and 15 kV)	0.005–0.02
Current-limiting reactors (600 V–15 kV)	0.09–0.30
Transformers	0.40–1.90
Load break switches	0.003–0.025
Medium-voltage starters	0.02–0.15
Busway (480 V and below)	0.05–0.50
Low-voltage switchgear	0.13–0.34
Motor-control centers	0.01–0.40
Cable	1.00–4.00
Motors 1–10 hp 10–200 hp 200–1500 hp 1500 hp and up	 14.00–35.00 6.00–12.00 4.00–7.00 2.30–4.50
Rectifiers (large)	3.00–9.00
Static variable speed drivers	6.00–15.00
Capacitors (watts loss/var)	0.50–2.00
Lighting (lumens/watts)	8.00–9.00

Source: Reprinted from H. N. Hickock, "Electrical Energy Losses in Power Systems," *IEEE Transactions on Industry Applications*, vol. IA-14, no. 5, Sept./Oct. 1978.

NOTE—Data on capacitors and lighting systems (fixtures and controls) should be obtained from manufacturers and considered in calculating power losses.

*Percent energy loss is simply a ratio of power consumed internally in equipment to the total energy passed through it.

--`,,`,,`-`-`,,`,,`,`,,`---

Copyright The Institute of Electrical and Electronics Engineers, Inc.
Provided by IHS under license with IEEE
No reproduction or networking permitted without license from IHS Not for Resale

10.2 Switching apparatus for power circuits

10.2.1 Classifications

Switching apparatus can be defined as a device for opening and closing, or for changing the connections of a circuit. The general classification of switching apparatus as used in this chapter includes switches, fuses, circuit breakers, and service protectors.

10.2.2 Switches

The types of switches normally used for power circuits include the following:

a) Isolating
b) Load interrupter
c) Safety switches for 600 V and lower power applications, including bolted-pressure switches and high-pressure contact switches and power protectors
d) Transfer switches for load transfer, including emergency and standby switching

10.2.2.1 Isolating switches

An isolating switch is used to provide a visible disconnect and frequently has no interrupting current rating. It should be operated only after the circuit has been opened by other means. Interlocking is generally provided to prevent operation when the switch is carrying current. Latches may be required to prevent the switch from being opened by magnetic forces under heavy fault currents.

10.2.2.2 Load interrupting switches

For services above 600 V a load interrupter or load-break switch, generally associated with unit substations supplied from the primary distribution system, is a switch combining the functions of a disconnecting switch and a load interrupter for interrupting, at rated voltage, currents not exceeding the continuous-current rating of the switch. Load-break switches are of the air or fluid-immersed type. The interrupter switch is usually manually operated and has a quick-make, quick-break mechanism that functions independently of the speed-of-handle operation. Such switches usually have a close-and-latch rating to provide maximum safety in the event of closing-in on a faulted circuit.

With a fused load-break switch combination, fast fault clearing and circuit isolation can be provided. This application, if properly coordinated to protect the transformer and to interrupt transformer magnetizing currents and load currents within the switch rating, may be more economical than a circuit breaker.

Rollout fuse-switch assemblies, produced by several manufacturers, have advantages such as replacing of fuses without the necessity of de-energizing the primary circuit, the ability to fuse on the line side of the switch, and complete accessibility to mechanical parts for check-out and maintenance.

--`,,`,,`-`-`,,`,,`,`,,`---

Copyright The Institute of Electrical and Electronics Engineers, Inc.
Provided by IHS under license with IEEE
No reproduction or networking permitted without license from IHS Not for Resale

It may be desirable from a safety standpoint in the case of a transformer application to interlock the operation of an interrupter switch with the secondary circuit breaker to minimize the chance of operating the interrupter switch at a time when the current exceeds the interrupting rating of the switch. Load interrupter switches having isolating blades are also available with vacuum interrupters and electronic fuses and may be actuated by ground-fault protective relaying, or phase failure protective relaying and fuses.

A circuit switcher is an alternative to fused load-break interrupter switches and medium-voltage circuit breakers. Circuit switchers have interrupting capacities in the range of 4000–12 500 A. They have the ability to provide low-level fault clearing capability actuated by conventional relaying typically used in circuit-breaker application. They are effectively used to provide ground-fault protection, differential relaying protection, transformer protection, and in some cases can eliminate the need for a secondary main overcurrent-protective device. When system capacities are above circuit-switcher-interrupting capacity, fuses are used to protect for the event of high-fault-level currents. It is possible for fault currents to escalate during the interrupting process. As in the case of all fused interrupters it is possible, on rare occasions, for the fault current to exceed the capacity of the interrupter prior to fuse clearing. Therefore, it is necessary that fused circuit-switchers be applied with care. In general, the interrupting contacts should not part at a time shorter than two times the fuse total clearing time at the interrupting capacity of the circuit-switcher.

10.2.2.3 Switches for 600 V and below

The application of fused safety switches is described in the NEC [B15] and requires a continuous-current rating of at least 115% of the full-load current rating of the motor.

For services of 600 V and below, safety circuit breakers and switches are commonly used. Safety switches are enclosed and may be fused or unfused. This type of switching device is operable by means of a handle from outside the enclosure and is interlocked so that the enclosure cannot be opened unless the switch is open or the interlock defeater is operated. Many safety switches have quick-make and quick-break features.

A safety switch for motors is rated in horsepower and voltage and is capable of interrupting the maximum operating current of a motor of the same horsepower at rated voltage. The maximum operating current of the motor is the locked-rotor current and is recognized by the NEC [B15] as six times full-load motor current.

Safety switches with current-limiting fuses can be applied to circuits with up to 200 000 A rms symmetrical fault current if the switch-fuse combination has been tested by an NRTL. Switches are labeled either by an NRTL or the manufacturer to indicate the particular switch-fuse combination that must be used to obtain the specified rating. It should never be assumed that interchanging fuses of a different class, even if they have the same rating, will result in safe switch application.

The *bolted-pressure switch* consists of movable blades and stationary contacts with arcing contacts and a mechanism for applying bolted pressure to both the hinge and jaw contacts in a manner similar to a bolted bus joint. Thus, a high degree of short-circuit withstandability is

Copyright The Institute of Electrical and Electronics Engineers, Inc.
Provided by IHS under license with IEEE
No reproduction or networking permitted without license from IHS Not for Resale

accomplished. The bolted-pressure switch can be applied at 100% of its continuous current rating. Some mechanisms have a spring that is compressed by the operating handle and released at the end of the operating stroke to provide quick-make, quick-break switching action.

The electrical-trip bolted-pressure switch is basically the same as the manually operated bolted-pressure switch, except that a stored-energy latch mechanism and a solenoid trip release are added to provide automatic electrical opening. All the other features normally required on low-voltage main and feeder circuits rated 600 A and above are available. These switches also can be designed for use with ground-fault protection equipment that may be required by the NEC [B15]. Bolted pressure switches have a contact interrupting rating of 12 times the continuous current rating. These switches are available in ratings of 600 A, 800 A, 1200 A, 1600 A, 2000 A, 2500 A, 3000 A, 4000 A, 5000 A and 6000 A, 600 Vac, and are suitable for use on circuits having available fault currents of 200 000 A rms symmetrical, when applied in combination with Class L current-limiting fuses.

A switch with a shunt-trip device and with a stored energy release (opening) mechanism is triggered by a voltage signal derived from the main circuit or from an independent source. A shunt-trip is used on a switch to provide the tripping required for ground-fault protection or other requirements, such as an application where it is desirable to open all three phases when one or two fuses open.

A second specialized type of safety switch is the *high-pressure contact switch*, which has an over-center toggle mechanism that provides stored energy for quick-make, quick-break operation. Multiple spring-loaded high-pressure current-carrying contact arms and an arcing contact arm provide high current-carrying capability without sacrificing high interrupting fault performance.

These switches can be applied at 100% of their continuous current rating and can interrupt on a make-and-break basis a minimum of 12 times their nameplate continuous-current rating without fuse assistance at 600 Vac. Therefore, complete switch and current-limiting fuse (Class L) coordination is achieved for all levels of fault current to a maximum of 200 000 A rms symmetrical at 600 Vac. These switches are available in continuous current ratings of 800 A, 1200 A, 1600 A, 2000 A, 2500 A, 3000 A, and 4000 A at 600 Vac maximum and are suitable for use at all short-circuit currents up to 200 000 A rms symmetrical when used with Class L current-limiting fuses.

The high-pressure contact switch can be equipped for manual tripping when ground-fault or remote tripping is not required. When equipped with a shunt trip, the switch can be remotely tripped, and/or have remote ground fault function applied; external control power is required. When integral ground fault function is applied, it is self-powered; however, the test function does require an external power source. Single-phase protection is available, which will trip the switch when a fuse or fuses open or the switch is closed with an open fuse or fuses.

Copyright The Institute of Electrical and Electronics Engineers, Inc.
Provided by IHS under license with IEEE
No reproduction or networking permitted without license from IHS Not for Resale

10.2.2.4 Transfer switches

Automatic transfer switches of double-throw construction are primarily used for emergency and standby power generation systems rated 600 V and less. These transfer switches do not normally incorporate overcurrent protection and are designed and applied in accordance with ANSI/NFPA 110-1993 [B16] and the NEC [B15], particularly Articles 230, 517, 700, 701, and 702. They are available in ratings from 30–4000 A. For reliability, most automatic transfer switches rated above 100 A are mechanically held and are electrically operated from the power source to which the load is to be transferred.

These switches are applied to provide protection against failure of the normal service. The transfer switch's control logic usually includes full-phase close differential voltage sensing of the normal source, voltage and frequency sensing of the emergency source, time delays for programmed operation, and in-phase monitoring for motor load transfer. In addition to utility failures, continuity of power to critical loads can also be disrupted by the following:

a) An open circuit within the building area on the load side of the incoming service
b) Overload or fault conditions
c) Electrical or mechanical failure of the electric power distribution system within the building

Therefore, many engineers advocate the use of lower-current-rated transfer switches located near the load rather than one large transfer switch at the point of incoming service. For critical applications, where load interruptions must be minimized, transfer switches are available with built-in bypass/isolation switches to enable maintenance without any load interruption. Other types provide closed transition operation to momentarily parallel the sources for load transfer without interruption. For additional information, see IEEE Std 446-1987 [B41].

10.2.3 Fuses

10.2.3.1 Types and rating basis

A fuse is an overcurrent-protective device with a circuit-opening fusible part that is heated and severed by the passage of overcurrent through it. Fuses are available in a wide range of voltage, current, and interrupting ratings, current-limiting types, and for indoor and outdoor applications.

Fuses rated greater than 600 V have an interrupting capability based on asymmetrical current, although their published ratings are expressed in symmetrical amperes. Current-limiting fuses interrupt a short circuit within the first half-cycle, and their equivalent asymmetrical rating includes a 1.6 multiplier to provide for the maximum expected current asymmetry.

Standard fuses without current-limiting capabilities are widely applied above 600 V. They are generally available in higher current ratings, but lower interrupting ratings, than current-limiting fuses.

--`,,`,,`-`-`,,`,,`,`,,`---

Copyright The Institute of Electrical and Electronics Engineers, Inc.
Provided by IHS under license with IEEE
No reproduction or networking permitted without license from IHS Not for Resale

Fuse ratings for 600 V and below are also published as symmetrical current values. These current-limiting fuses are extremely fast in operation at very high values of fault current, and act to limit the current in less than one-quarter cycle to a value well below the available peak short-circuit current. Several types of current-limiting fuses for 600 V and below are now available for ac service with interrupting ratings as high as 300 000 A rms symmetrical. For more information on fuses, see Chapter 5.

10.2.3.2 Application considerations

There is no general rule for deciding whether to use fuses or a circuit breaker. The designer's decision should be based on the demands of the particular application. The following considerations may be of assistance to the designer:

a) *Interrupting ratings*. Current-limiting fuses with 300 000 A rms symmetrical ratings are available for 600 V and below applications.
b) *Component protection*
    1) Current-limiting fuses permit minimal short-circuit current let-throughs, thus minimizing damage to lower interrupting capacity-rated and withstand-rated components.
    2) Current-limiting fuses can cause transient voltages in clearing faults that may be detrimental to the system components, such as motors, surge arresters, etc. However, techniques are available to determine the suitability of equipment during the engineering phase.
    3) Fuses, in conjunction with shunt-trip switches and ground-fault sensing systems, can provide sensitive protection.
c) *Selective coordination*. Fuse time–current clearing curves are accurate, and fuses' characteristics usually do not change over time. Selective coordination can be achieved by referring to manufacturers' published fuse ratio charts. By adhering to these recommended ratios and exercising sound engineering judgment, coordination between different types of protective devices can be achieved. Also, protective coordination studies may be done on computers. Protective coordination software exists which contains libraries of fuse manufacturers' curves and other protective devices.
d) *Space requirements*. Fusible switching devices require more space than circuit breakers.
e) *Economics*. Initial capital cost and maintenance costs are lower for fusible equipment.
f) *Automatic switching*. Fuses alone are not capable of automatic switching, but can be installed in suitable shunt-trip equipped switches to provide this service. Care must be exercised in applying a shunt-tripped switch. If the shunt-trip is actuated by a protective or phase failure relay, the switch must be capable of interrupting the fault duty to which it may be subjected.

10.2.4 Circuit breakers

A circuit breaker is a device designed to open and close a circuit by nonautomatic means, and to open the circuit automatically on a predetermined overload of current without damage to itself when properly applied within its rating. Circuit breakers are required to operate infre-

Copyright The Institute of Electrical and Electronics Engineers, Inc.
Provided by IHS under license with IEEE
No reproduction or networking permitted without license from IHS Not for Resale

quently, although some classes of circuit breakers are suitable for more frequent operation. The interrupting and momentary ratings of a circuit breaker must be equal to or greater than the available system short-circuit currents.

To provide essential switching flexibility and circuit protection, power circuit breakers are used on medium- and low-voltage systems of utility and industrial distribution circuits.

Circuit breakers are available for the entire voltage range. They may be furnished single-, double-, triple-, or four-pole, and arranged for indoor or outdoor use. SF_6 gas-insulated circuit breakers are available for medium and high voltages, such as gas-insulated substations.

10.2.4.1 Circuit breakers over 600 V

The close-and-latch rating and current-interrupting capabilities are very important factors for use in the application of circuit breakers over 600 V. The close-and-latch capability is a measure of the equipment's ability to withstand the mechanical stresses produced by the asymmetrical short-circuit current during the first cycle without mechanical damage, and is normally expressed as total rms current. An asymmetrical current consists of a dc component superimposed on an ac component. The dc component decays with time, depending upon the resistance and reactance, or the *X*/*R* ratio of the circuit. The initial value of the dc component of the short-circuit current depends on the point of the normal voltage wave at which the fault occurs. The procedure to be used for short-circuit selection of power circuit breakers in the over 600 V class is covered in Chapter 5. Application data can be found in IEEE Std C37.010-1979 [B18].

For the rating of power circuit breakers in the over 600 V class, refer to IEEE Std C37.06-1987 [B1]. Circuit breakers currently being manufactured are rated on the symmetrical basis. In specifying these circuit breakers, consideration should be given to the related values and required capabilities listed as headings in tables 10-2(a) and 10-2(b). These tables list preferred ratings for indoor oilless circuit breakers. These ratings are applicable for service at altitudes up to 3300 ft. For service beyond 3300 ft, derating factors must be applied in accordance with IEEE Std C37.04-1979 [B21].

Power circuit breakers used for applications through 15 kV have been predominantly of the air-magnetic type; however, vacuum and SF_6 types are now used almost exclusively for new installations. For voltages above 15 kV, the available types of circuit breakers include oil, compressed air or gas, and vacuum interrupters. In general, vacuum power circuit breakers are applied in accordance with the specific continuous and short-circuit current requirements in the same manner as air-magnetic power circuit breakers. However, under certain conditions vacuum interrupters have characteristics that are different from air-magnetic power circuit breakers. Vacuum interrupters will sometimes, in special applications, force a premature current zero by opening ("chopping") the circuit in an unusually short time. When this occurs, a higher than normal transient recovery voltage occurs that can be of a magnitude that will impose excessive dielectric stress on the connected equipment. In some equipment, this magnitude may be greater than the basic impulse insulation level of any connected device, and failure may result.

Copyright The Institute of Electrical and Electronics Engineers, Inc.
Provided by IHS under license with IEEE
No reproduction or networking permitted without license from IHS Not for Resale

Table 10-2(a)—Preferred ratings for indoor oilless circuit breakers

Rated maximum voltage (1) (kV, rms)	Rated voltage range factor K (2)	Rated continuous current at 60 Hz (3) (amperes, rms)	Rated short-circuit current* (at rated maximum kV) (4) (5) (6) (9) (kA, rms)	Rated interrupting time (7) (cycles)	Rated maximum voltage divided by K (kV, rms)	Maximum symmetrical interrupting capability and rated short-time current (4) (5) (8) (kA, rms)	Closing and latching capability 2.7K times rated short-circuit current (4) (kA, crest)
4.76	1.36	1200	8.8	5	3.5	12	32
4.76	1.24	1200, 2000	29	5	3.85	36	97
4.76	1.19	1200, 2000, 3000	41	5	4.0	49	132
8.25	1.25	1200, 2000	33	5	6.6	41	111
15.0	1.30	1200	18	5	11.5	23	62
15.0	1.30	1200, 2000	28	5	11.5	36	97
15.0	1.30	1200, 2000, 3000	37	5	11.5	48	130
38.0	1.65	1200, 2000, 3000	21	5	23.0	35	95
38.0	1.0	1200, 3000	40	5	38.0	40	108

Source: Based on ANSI C37.06-1987 [B1].

*For the related required capabilities associated with the rated short-circuit current of the circuit breaker, see Note 4.

NOTES—Numbers in parentheses in the tables refer to the following correspondingly numbered notes:

For service conditions, definitions, and interpretation of ratings, tests, and qualifying terms, see IEEE Std C37.04-1979, IEEE Std C37.09-1979, and IEEE Std C37.100-1981.

The interrupting ratings are for 60 Hz systems. Applications on 25 Hz systems should receive special consideration.

Current values have been rounded off to the nearest kiloampere (kA) except that two significant figures are used for values below 10 kA.

(1) The voltage rating is based on ANSI C84.1-1989, where applicable, and is the maximum voltage for which the breaker is designed and the upper limit for operation.

(2) The rated voltage range factor, *K*, is the ratio of rated maximum voltage to the lower limit of the range of operating voltage in which the required symmetrical and asymmetrical current interrupting capabilities vary in inverse proportion to the operating voltage.

(3) The 25 Hz continuous current ratings in amperes are given herewith following the respective 60 Hz rating: 600–700; 1200–1400; 2000–2250; 3000–3500.

(4) Related Required Capabilities. The following related required capabilities are associated with the short-circuit current rating of the circuit breaker.

(a) Maximum symmetrical interrupting capability (kA, rms) of the circuit breaker is equal to *K* times rated short-circuit current.

(b) 3 s short-time current-carrying capability (kA, rms) of the circuit breaker is equal to *K* times rated short-circuit current.

(c) Closing and latching capability (kA, rms) of the circuit breaker is equal to 1.6 *K* times rated short-circuit current. If expressed in peak amperes, the value is equal to 2.7 *K* times rated short-circuit current.

(d) 3 s short-time current-carrying capability and closing and latching capability are independent of operating voltage up to and including rated maximum voltage.

(5) To obtain the required symmetrical current interrupting capability of a circuit breaker at an operating voltage between 1/*K* times rated maximum voltage and rated maximum voltage, the following formula shall be used:

$$\text{Required symmetrical current interrupting capability} = \text{rated short-circuit current} \cdot \frac{(\text{rated maximum voltage})}{(\text{operating voltage})}$$

For operating voltages below 1/*K* times rated maximum voltage, the required symmetrical current interrupting the circuit breaker shall be equal to *K* times rated short-circuit current.

Copyright The Institute of Electrical and Electronics Engineers, Inc.
Provided by IHS under license with IEEE
No reproduction or networking permitted without license from IHS
Not for Resale

Table 10-2(a)—Preferred ratings for indoor oilless circuit breakers (continued)

(6) With the limitation stated in 5.10 of IEEE Std C37.04-1979, all values apply for polyphase and line-to-line faults. For single phase-to-ground faults, the specific conditions stated in 5.10.2.3 of IEEE Std C37.04-1979 apply.

(7) The ratings in this column are on a 60 Hz basis and are the maximum time interval to be expected during a breaker opening operation between the instant of energizing the trip circuit and interruption of the main circuit on the primary arcing contacts under certain specified conditions as specified in 5.7 of IEEE Std C37.04-1979.

(8) Current values in this column are not to be exceeded even for operating voltages below 1/*K* times rated maximum voltage. For voltages between rated maximum voltage and 1/*K* times rated maximum voltage, follow (5) above.

(9) Rated permissible tripping delay time (*Y*) = 2 s.

(10) The rated values for T_2 are not standardized for indoor oilless circuit breakers; however, E_2 = 1.88 times rated maximum voltage; E_2 = transient recovery voltage; T_2 = rated time to point *P* μs.

Table 10-2(b)—Preferred capacitance current switching ratings for indoor oilless circuit breakers

Rated maximum voltage (kV, rms)	Rated short-circuit current (kA, rms)	Rated continuous current (3) (amperes, rms)	General-purpose circuit breakers rated capacitance switching current (1) (2)		Definite-purpose circuit breakers rated capacitance switching current (2)				
						Shunt capacitor bank or cable			
							Back-to-back		
			Overhead line current (amperes, rms)	Shunt capacitor bank or cable Isolated current (3) (amperes, rms)	Overhead line current (amperes, rms)	Isolated current (3) (amperes, rms)	Current (3) (amperes, rms)	Inrush current (4) Peak current (kA)	Inrush current (4) Frequency (Hz)
4.76	8.8	1200	1	400	1	630	630	15	2000
4.76	29	1200	1	400	1	630	630	15	2000
4.76	29	2000	1	400	1	1000	1000	15	1270
4.76	41	1200, 2000	1	400	1	630	630	15	2000
4.76	41	3000	1	400	1	1000	1000	15	1270
8.25	33	1200	1	250	1	630	630	15	2000
8.25	33	2000	1	250	1	1000	1000	15	1270
15.0	18	1200	2	250	2	630	630	15	2000
15.0	18	2000	2	250	2	1000	1000	15	1270
15.0	28	1200	2	250	2	630	630	15	2000
15.0	28	2000	2	250	2	1000	1000	15	1270
15.0	37	1200	2	250	2	630	630	15	2000
15.0	37	2000	2	250	2	1000	1000	18	2400
15.0	37	3000	2	250	2	1600	1600	25	1330
38.0	21	1200, 2000, 3000	5	50	5	250	250	18	6000
38.0	40	1200, 3000	5	50	5	250	250	25	8480

Source: Based on ANSI C37.06-1987 [B1].

NOTES—Numbers in parentheses in the tables refer to the following correspondingly numbered notes:.

(1) No ratings for back-to-back shunt capacitor bank or cable switching applications are established for general-purpose circuit breakers. The shunt capacitor bank or cable shall be electrically isolated as defined in 5.13.2 of IEEE Std C37.04-1979.

Copyright The Institute of Electrical and Electronics Engineers, Inc.
Provided by IHS under license with IEEE
No reproduction or networking permitted without license from IHS
Not for Resale

Table 10-2(b)—Preferred capacitance current switching ratings for indoor oilless circuit breakers (continued)

For general-purpose circuit breakers exposed to transient inrush currents from nearby capacitor banks during fault conditions, the capacitance transient inrush peak current on closing shall not exceed the lower of either $\sqrt{2} \cdot K \cdot$ rated short-circuit current ($\sqrt{2} \cdot K \cdot 1$), or 50 000 peak A. The product of transient inrush current peak and transient inrush current frequency shall not exceed $2 \cdot 10^7$. The service capability and circuit breaker condition for this duty shall be as specified in IEEE Std C37.04-1979, 5.10.3.3. For reference, see IEEE Std C37.012-1979, 4.10.2.

(2) The capacitance switching current ratings are the highest values that the circuit breaker shall be required to switch at any voltage up to rated maximum voltage.

(3) When applied on shunt capacitor banks, the current rating shall be selected to include the effects of a positive tolerance in capacitance, system and capacitor bank grounding, and additional current magnitude and heating due to harmonics.

(4) The rated transient inrush current peak is the highest magnitude that the circuit breaker shall be required to close at any voltage up to the rated maximum voltage, and shall be as determined by the system and unmodified by the circuit breaker. The rated transient inrush current frequency is the natural frequency that the circuit breaker shall be required to close at 100% of its rated back-to-back shunt capacitor bank or cable switching current.

For application at less than 100% of rating, the product of the inrush current peak and natural frequency shall not exceed the product of the rated transient current peak and the rated transient inrush current frequency. (This product defines a maximum rate of change of inrush current and a minimum inductance between the banks or cables.)

When applying vacuum power circuit breakers, the following precautions should be taken:

a) *Switching unloaded transformers*. When switching power transformers that are unloaded, that is, interrupting just the small magnetizing current on an infrequent basis (less than 50 operations per year), and where the basic impulse insulation level is 95 kV or higher, no special attention is required. However, should either a dry-type transformer be involved with less than a 95 kV basic impulse insulation level rating, or all switching be highly repetitive, then the applications should be checked with the transformer manufacturer.

b) *Switching loaded transformers*. When a power transformer has a permanently connected load in kilovoltamperes of 5% or more of its nameplate rating, no special consideration is needed.

c) *Switching motors*. When vacuum power circuit breakers are utilized to switch motors, the standard rotating-machine protection package of capacitors and surge arresters should be considered, if required by the manufacturer's design.

Although *transient recovery voltage* (TRV) parameters have yet to be established for indoor types of circuit breakers, they remain an important consideration for proper application. Transformer-limited faults and air-core reactors are known to produce TRV stress exceeding TRV limits established for outdoor types of circuit breakers. Vacuum circuit breakers are typically less sensitive to excessive TRV stress. SF_6-type units typically meet requirements for outdoor service. Circuits shall meet the TRV requirements as established by IEEE Std C37.04-1979 [B21] and ANSI C37.06-1987 [B1]. For guidance, consult IEEE Std C37.011-1979 [B19] and the circuit breaker manufacturer.

Copyright The Institute of Electrical and Electronics Engineers, Inc.
Provided by IHS under license with IEEE
No reproduction or networking permitted without license from IHS Not for Resale

10.2.4.2 Circuit breakers of 600 V and below

Circuit breakers rated 600 V and below are divided into two basic classes and three types:

Classifications:

a) Low-voltage power circuit breaker class
b) Molded-case circuit breaker class

Types: The first two types are derived from the above classifications. The third type offers features from both the first and the second class.

a) Low-voltage power circuit breakers (LVPCBs)
b) Molded-case circuit breakers (MCCBs)
c) Insulated-case circuit breakers (ICCBs)

Low-voltage power circuit breakers (LVPCBs). Power circuit breakers of 600 V and below are open-construction assemblies on metal frames with all parts designed for accessible maintenance, repair, and ease of replacement. They are intended for service in switchgear compartments or other enclosures of dead-front construction. Tripping units are field-adjustable over a wide range and are interchangeable within their frame sizes. The tripping units used are the electromagnetic overcurrent direct-acting type, solid-state type, and microprocessor-based units with various selectivity and additional monitoring capabilities.

These types of breakers can be used with integral current-limiting fuses in drawout construction to meet interrupting current requirements up to 200 000 A rms symmetrical. When part of the circuit breaker, the fuses are combined with an integral-mounted open-fuse trip device to prevent single-phasing if one fuse should blow.

In current designs of air circuit breakers of 600 V and below, contacts often begin to part during the first cycle of short-circuit current but have a multicycle total clearing time. Consequently, these breakers should be designed to interrupt the maximum available quarter-cycle asymmetrical current. However, since air circuit breakers of 600 V and below are rated on a symmetrical current basis, the need for applying dc offset multipliers to determine their interrupting ratings is eliminated provided they are applied at a system location where the X/R ratio is equal to or lower than the X/R ratios at which they are tested. (Note that caution should be applied when these air circuit breakers are supplied with short-time delay trips because increases in short-circuit stress on the breaker could result in both a lower breaker interrupting capacity rating and extensive equipment damage from exceeding withstand ratings. Manufacturers' literature should be consulted.)

Power circuit breakers 600 V and below can be applied on a symmetrical basis to its name plate rating up to X/R ratios of 6.6 for unfused breakers and up to X/R ratios of 4.9 for fused breakers. Power circuit breakers may be applied to systems with higher X/R ratios when applied in accordance with the application information provided in 10.1.4.3 of IEEE Std C37.13-1990 [B22].

Copyright The Institute of Electrical and Electronics Engineers, Inc.
Provided by IHS under license with IEEE
No reproduction or networking permitted without license from IHS Not for Resale

Power circuit breakers are designed for periodic planned maintenance. This design permits higher endurance ratings and repetitive duty capabilities and some basis for a broader range of applications.

Molded-case circuit breakers (MCCBs). A molded-case circuit breaker (NEMA AB 1-1986 [B43]) is a switching device and an automatic protective device assembled in an integral housing of insulating material. These breakers are generally capable of clearing a fault more rapidly than power circuit breakers and are available in the following general types:

a) *Thermal magnetic*. This type employs thermal tripping for overloads and instantaneous magnetic tripping for short circuits. These are the most widely applicable molded-case circuit breakers.
b) *Magnetic*. This type employs only instantaneous magnetic tripping where only short-circuit interruption is required. The NEC [B15] recognizes adjustable magnetic types for motor circuit protection.
c) *Integrally fused*. This type combines regular thermal magnetic protection against overloads and lower value short-circuit faults with current-limiting fuses responding to higher short-circuit currents. Interlocks are provided to ensure safe and proper operation.
d) *High interruption rating*. This fuseless type provides interrupting capabilities for higher short-circuit currents than do standard constructed thermal magnetic circuit breakers. This line incorporates sturdier construction of contacts and mechanism, plus a special high-impact molded casing.
e) *Current-limiting*. This type provides high interruption rating protection, plus it limits let-through current and energy to a value significantly lower than the corresponding value for a conventional molded-case circuit breaker. Clearing time is also limited, and restoration of service is possible by resetting without replacement of any fusible elements or other parts.

With the advent of electronic trip devices being incorporated into molded-cased circuit breakers, the possibility for coordination with power circuit breakers is improved, but requires close scrutiny for proper application. Molded-case circuit breakers have an instantaneous override even when they are set on short-time delay. When a load-side (downstream) circuit breaker sees a large fault, not only will it trip, but if the fault exceeds the instantaneous setting of the line-side (upstream) circuit breaker, it will also trip. For system integrity, care must be exercised to ensure that coordination is maintained with line-side (upstream) devices and that load-side (downstream) equipment withstand ratings are not exceeded.

Molded-case circuit breakers generally are not designed to be maintained in the field as are power circuit breakers. Many molded-case breakers are sealed to prevent tampering, thereby precluding inspection of the contacts. In addition, replacement parts are not generally available. Manufacturers recommend total replacement of the molded-case circuit breaker if a defect appears, or if the unit begins to overheat. Molded-case circuit breakers, particularly the larger sizes, are not suitable for repetitive switching. Maintenance should be performed upon molded-case circuit breakers after they experience a fault which was near its interruption rating. It is important to recognize that differences in test criteria between power circuit breakers and molded-case circuit breakers can be significant in the application of circuit breakers at or

--`,,`,,`-`-`,,`,,`,`,,`---
Copyright The Institute of Electrical and Electronics Engineers, Inc.
Provided by IHS under license with IEEE
No reproduction or networking permitted without license from IHS Not for Resale

near their interrupting rating. A combination of circumstances can reduce the performance of molded-case circuit breakers to less than adequate if they are applied at or near their interrupting rating on a par with power circuit breakers.

Insulated-case circuit breakers (ICCBs). Insulated-case circuit breakers utilize characteristics of design from both power- and molded-case types. The frame size of this type of breaker is larger than the frame size for molded-case breakers. The trip unit can be interchanged, and the breakers can be designed for fix-mounting as well as with drawout configuration. The interruption duty of this type of breaker can be faster than that of molded-case breakers. In general, interruption of ICCBs is not fast enough to be a current-limiting type. Insulated-case circuit breakers are partially field-maintainable. The circuit breaker must be capable of closing, carrying, and interrupting the highest fault current within its rating at that location. It is essential to select a circuit breaker whose interrupting rating at the circuit voltage is equal to or greater than the available short-circuit current at the point of installation. The procedure to be used for selection of power circuit breakers of 600 V and below with the proper interrupting rating is covered in Chapter 6.

Manufacturers' publications give specific information on mechanical and electrical features of circuit breakers 600 V and below. Refer to IEEE Std C37.13-1990 [B22], ANSI C37.16-1988 [B2], and tables 10-3 and 10-4 for lists of standard ratings for 600 V and below circuit breakers. For service at altitudes above 6600 ft above sea level, derating factors must be applied in accordance with IEEE Std C37.13-1990 [B22].

Unusual service conditions, as defined in IEEE Std C37.04-1979 [B21] and IEEE Std C37.13-1990 [B22], should be considered when applying power circuit breakers. Such conditions should be brought to the attention of the circuit breaker manufacturer at the earliest possible time.

10.2.5 Service protectors

A service protector consists of a current-limiting fuse and nonautomatic circuit-breaker-type switching device in a single enclosure. Stored energy operation provides for manual or electrical closing. The service protector, utilizing basic circuit-breaker principles, permits frequent repetitive operation under normal and abnormal current conditions up to 12 times the device's continuous-current rating. In combination with current-limiting fuses, it is capable of closing and latching against fault currents up to 200000 A rms symmetrical. During fault interruption, the service protector will withstand the stresses created by the let-through current of the fuses.

Service protectors are available at continuous-current ratings of 800, 1200, 1600, 2000, 3000, 4000, 5000, and 6000 A for use on 240 and 480 Vac systems, in two-pole and three-pole construction. An open-fuse trip device, which prevents the occurrence of single phasing after a fuse opening, is included in the design of the service protector.

Copyright The Institute of Electrical and Electronics Engineers, Inc.
Provided by IHS under license with IEEE
No reproduction or networking permitted without license from IHS Not for Resale

Table 10-3—Preferred ratings for low-voltage ac power circuit breakers with instantaneous direct-acting phase trip elements

Line no.	System nominal voltage (volts)	Rated maximum voltage (volts)	Insulation (dielectric) withstand (volts)	Three-phase short-circuit current rating (symmetrical amperes)*	Frame size (amperes)	Range of trip-device current ratings (amperes)
	Col. 1	Col. 2	Col. 3	Col. 4	Col. 5	Col. 6
1	600	635	2200	14 000	225	40–225
2	600	635	2200	22 000	600	40–600
3	600	635	2200	22 000	800	100–800
4	600	635	2200	42 000	1600	200–1600
5	600	635	2200	42 000	2000	200–2000
6	600	635	2200	65 000	3000	2000–3000
7	600	635	2200	65 000	3200	2000–3200
8	600	635	2200	85 000	4000	4000
9	480	508	2200	22 000	225	40–225
10	480	508	2200	30 000	600	100–600
11	480	508	2200	30 000	800	100–800
12	480	508	2200	50 000	1600	400–1600
13	480	508	2200	50 000	2000	400–2000
14	480	508	2200	65 000	3000	2000–3000
15	480	508	2200	65 000	3200	2000–3200
16	480	508	2200	85 000	4000	4000
17	240	254	2200	25 000	225	40–225
18	240	254	2200	42 000	600	150–600
19	240	254	2200	42 000	800	150–800
20	240	254	2200	65 000	1600	600–1600
21	240	254	2200	65 000	2000	600–2000
22	240	254	2200	85 000	3000	2000–3000
23	240	254	2200	85 000	3200	2000–3200
24	240	254	2200	130 000	4000	4000

Source: Based on data taken from IEEE Std C37.13-1981 [B22].

NOTE—Trip devices for both overcurrent and ground-fault protection are readily available from most manufacturers, although the trip ranges given here are based on electromechanical direct or indirect acting types. The manufacturer should be consulted relative to electronic trip characteristics. Electronic trip devices provide many advantages over conventional types and their use should be seriously considered. A major advantage is the inherent provision for sensitive ground-fault protection. For further discussion and trip characteristic curves, see Chapter 5. Particular attention must be given to coordination of load-side fuse devices with instantaneous trip devices of circuit breakers.

*Ratings in this column are rms symmetrical values for single-phase (2-pole) circuit breakers and three-phase average rms symmetrical values of three-phase (3-pole) circuit breakers. When applied on systems where rated maximum voltage may appear across a single pole, the short-circuit current ratings are 87% of these values. See IEEE Std C37.13-1981 [B22], 5.6.

Copyright The Institute of Electrical and Electronics Engineers, Inc.
Provided by IHS under license with IEEE
No reproduction or networking permitted without license from IHS Not for Resale

Table 10-4—Preferred ratings for low-voltage ac power circuit breakers without instantaneous direct-acting phase trip elements (short time-delay element or remote relay)

Line no.	System nominal voltage (volts)	Rated maximum voltage (volts)	Insulation (dielectric) withstand (volts)	Three-phase short-circuit current rating (symmetrical amperes)*†	Frame size (amperes)	Range of trip-device current ratings (amperes)		
						Setting of short-time-delay trip element		
	Col. 1	Col. 2	Col. 3	Col. 4	Col. 5	Col. 6	Col. 7	Col. 8
1	600	635	2200	14 000	225	100–225	125–225	150–225
2	600	635	2200	22 000	600	175–600	200–600	250–600
3	600	635	2200	22 000	800	175–800	200–800	250–800
4	600	635	2200	42 000	1600	350–1600	400–1600	500–1600
5	600	635	2200	42 000	2000	350–2000	400–2000	500–2000
6	600	635	2200	65 000	3000	2000–3000	2000–3000	2000–3000
7	600	635	2200	65 000	3200	2000–3200	2000–3200	2000–3200
8	600	635	2200	85 000	4000	4000	4000	4000
9	480	508	2200	14 000	225	100–225	125–225	150–225
10	480	508	2200	22 000	600	175–600	200–600	250–600
11	480	508	2200	22 000	800	175–800	200–800	250–800
12	480	508	2200	42 000	1600	350–1600	400–1600	500–1600
13	480	508	2200	50 000	2000	350–2000	400–2000	500–2000
14	480	508	2200	65 000	3000	2000–3000	2000–3000	2000–3000
15	480	508	2200	65 000	3200	2000–3200	2000–3200	2000–3200
16	480	508	2200	85 000	4000	4000	4000	4000
17	240	254	2200	14 000	225	100–225	125–225	150–225
18	240	254	2200	22 000	600	175–600	200–600	250–600
19	240	254	2200	22 000	800	175–800	200–800	250–800
20	240	254	2200	42 000	1600	350–1600	400–1600	500–1600
21	240	254	2200	50 000	2000	350–2000	400–2000	500–2000
22	240	254	2200	65 000	3000	2000–3000	2000–3000	2000–3000
23	240	254	2200	65 000	3200	2000–3200	2000–3200	2000–3200
24	240	254	2200	85 000	4000	4000	4000	4000

Source: Based on data taken from IEEE Std C37.13-1981 [B22].

NOTE—Trip devices for both overcurrent and ground-fault protection are readily available from most manufacturers, although the trip ranges given here are based on electromechanical direct or indirect acting types. The manufacturer should be consulted relative to electronic trip characteristics. Electronic trip devices provide many advantages over conventional types and their use should be seriously considered. A major advantage is the inherent provision for sensitive ground-fault protection. For further discussion and trip characteristic curves, see Chapter 5.

*Short-circuit current ratings for breakers without direct-acting trip devices, opened by a remote relay, are the same as those listed here.

†Ratings in this column are rms symmetrical values for single-phase (2-pole) circuit breakers and three-phase average rms symmetrical values of three-phase (3-pole) circuit breakers. When applied on systems where rated maximum voltage may appear across a single pole, the short-circuit current ratings are 87% of these values. See IEEE Std C37.13-1981 [B22], 5.6.

Copyright The Institute of Electrical and Electronics Engineers, Inc.
Provided by IHS under license with IEEE
No reproduction or networking permitted without license from IHS
Not for Resale

10.3 Switchgear

10.3.1 General discussion

Switchgear is a general term that describes switching and interrupting devices, either alone or in combination with other associated control, metering, protective, and regulating equipment, which are assembled in one or more sections.

A power switchgear assembly consists of a complete assembly of one or more of the above-noted devices and main bus conductors, interconnecting wiring, accessories, supporting structures, and enclosure. Power switchgear is applied throughout the electric power system of an industrial plant, but is principally used for incoming line service and to control and protect load centers, motors, transformers, motor control centers, panelboards, and other secondary distribution equipment.

Outdoor switchgear assemblies can be of the non-walk-in (without enclosed maintenance aisle) or walk-in (with an enclosed maintenance aisle) variety. Switchgear for industrial plants is generally located indoors for easier maintenance, avoidance of weather problems, and shorter runs of feeder cable or bus duct. In outdoor applications the effect of external influences, principally the sun, wind, moisture, and local ambient temperatures, should be considered in determining the suitability and current-carrying capacity of the switchgear. Further information on outdoor applications is contained in IEEE Std C37.24-1986 [B29].

In many locations, the use of lighter colored (non-metallic) paints will minimize the effect of solar energy loading so as to avoid derating of the equipment in outdoor locations. See IEEE Std C37.24-1986 [B29].

10.3.2 Classifications

An open switchgear assembly is one that does not have an enclosure as part of the supporting structure. Since open switchgear assemblies are rarely used in industrial installations, consideration will be given to metal-enclosed assemblies only.

An enclosed switchgear assembly consists of a metal-enclosed supporting structure with the switchgear enclosed on the top and all sides with sheet metal (except for ventilating openings and inspection windows). Access within the enclosure is provided by doors or removable panels.

Metal-enclosed switchgear is universally used throughout industry for utilization and primary distribution voltage service, for ac and dc applications, and for indoor and outdoor locations.

10.3.3 Types of metal-enclosed switchgear

Specific types of metal-enclosed switchgear used in industrial plants are defined as (1) metal-clad switchgear, (2) low-voltage power circuit breaker switchgear, and (3) interrupter switchgear. The metal-enclosed bus will also be discussed because it is frequently used in conjunction with power switchgear in modern industrial power systems.

Copyright The Institute of Electrical and Electronics Engineers, Inc.
Provided by IHS under license with IEEE
No reproduction or networking permitted without license from IHS Not for Resale

10.3.3.1 Metal-clad switchgear

Metal-clad switchgear is metal-enclosed power switchgear characterized by the following necessary features:

a) The main circuit switching and interrupting device is of the removable type arranged with a mechanism for moving it physically between connected and disconnected positions, and equipped with self-aligning and self-coupling primary and secondary disconnecting devices.
b) Major parts of the primary circuit, such as the circuit switching or interrupting devices, buses, potential transformers, and control power transformers, are enclosed by grounded metal barriers. Specifically included is an inner barrier in front of, or as a part of, the circuit interrupting device to ensure that no energized primary circuit components are exposed when the unit door is opened.
c) All live parts are enclosed within grounded metal compartments. Automatic shutters prevent exposure of primary circuit elements when the removable element is in the test, disconnected, or fully withdrawn position.
d) Primary bus conductors and connections are covered with insulating material throughout. For special configurations, insulated barriers between phases and between phase and ground may be specified.
e) Mechanical interlocks are provided to ensure a proper and safe operating sequence.
f) Instruments, meters, relays, secondary control devices, and their wiring are isolated by grounded metal barriers from all primary circuit elements, with the exception of short lengths of wire associated with instrument transformer terminals.
g) The door, through which the circuit-interrupting device is inserted into the housing, may serve as an instrument or relay panel and may also provide access to a secondary or control compartment within the housing.

Auxiliary frames may be required for mounting associated auxiliary equipment, such as potential transformers, control power transformers, etc.

The term metal-clad switchgear can be properly used only if metal-enclosed switchgear conforms to the foregoing specifications. All metal-clad switchgear is metal-enclosed, but not all metal-enclosed switchgear can be correctly designated as metal-clad.

10.3.3.2 Low-voltage power circuit breaker switchgear

Metal-enclosed power circuit breaker switchgear of 1000 V and below is metal-enclosed power switchgear, including the following equipment as required:

a) Power circuit breakers of 1000 V and below (fused or unfused)
b) Non-insulated bus and connections (insulated and isolated bus is available)
c) Instrument and control power transformers
d) Instruments, meters, and relays
e) Control wiring and accessory devices
f) Cable and busway termination facilities

Copyright The Institute of Electrical and Electronics Engineers, Inc.
Provided by IHS under license with IEEE
No reproduction or networking permitted without license from IHS Not for Resale

g) Shutters to automatically cover line-side contacts when the circuit breaker is withdrawn

The power circuit breakers of 1000 V and below are contained in individual grounded metal compartments and controlled either remotely or from the front of the panels. The circuit breakers are usually of the drawout type, but may be stationary (*fixed* or *plug-in*). When drawout-type circuit breakers are used, mechanical interlocks must be provided to ensure a proper and safe operating sequence.

10.3.3.3 Interrupter switchgear

Metal-enclosed interrupter switchgear is metal-enclosed power switchgear, including the following equipment as required:

a) Interrupter switches or circuit switchers
b) Power fuses (if required)
c) Non-insulated bus and connections
d) Instrument and control power transformers
e) Control wiring and accessory devices

The interrupter switches and power fuses may be of the stationary or removable type. For the removable type, mechanical interlocks are provided to ensure a proper and safe operating sequence.

10.3.3.4 Metal-enclosed bus

Metal-enclosed bus is an assembly of rigid electrical buses with associated connections, joints, and insulating supports, all housed within a grounded metal enclosure. Three basic types of metal-enclosed bus construction are recognized: nonsegregated phase, segregated phase, and isolated phase. The most prevalent type used in industrial power systems is the nonsegregated phase, which is defined as one in which all phase conductors are in a common metal enclosure without barriers between the phases. When metal-enclosed buses over 1000 V are used with metal-clad switchgear, the bus conductors and connections are covered with insulating material throughout. When metal-enclosed buses are associated with metal-enclosed power circuit breaker switchgear of 1000 V and below or metal-enclosed interrupter switchgear, the primary bus conductors and connections are usually noninsulated.

10.3.4 Ratings

The ratings of switchgear assemblies and metal-enclosed buses are designations of the operational limits of the particular equipment under specific conditions of ambient temperature, altitude, frequency, duty cycle, etc. Table 10-5 lists the rated voltages and insulation levels for ac switchgear assemblies discussed in this section. The ratings for metal-enclosed buses are identical to those listed in table 10-5. Rated voltages and insulation levels for dc switchgear assemblies can be found by referring to IEEE Std C37.20.1-1987 [B26], IEEE Std C37.20.2-1987 [B27], and IEEE Std C37.20.3-1987 [B28]. The definition of the ratings listed in table 10-5, and others subsequently discussed, can be found in IEEE Std C37.100-1992

Copyright The Institute of Electrical and Electronics Engineers, Inc.
Provided by IHS under license with IEEE
No reproduction or networking permitted without license from IHS Not for Resale

Table 10-5—Rated voltages and insulation levels for ac switchgear assemblies

Rated voltage (rms)		Insulation levels (kV)		
Rated nominal voltage	**Rated maximum voltage**	**Power frequency withstand (rms)**	**DC withstand***	**Impulse withstand**
Metal-enclosed low-voltage power circuit breaker switchgear (in V)				
240	254	2.2	3.1	—
480	508	2.2	3.1	—
600	635	2.2	3.1	—
Metal-clad switchgear (in kV)				
4.16	4.76	19	27	60
7.2	8.25	36	50	95
13.8	15.0	36	50	95
34.5	38.0	80	†	150
Metal-enclosed interrupter switchgear (in kV)				
4.16	4.76	19	27	60
7.2	8.25	26	37	75
13.8	15.0	36	50	95
14.4	15.5	50	70	110
23.0	25.8	60	†	125
34.5	38.0	80	†	150
Station-type cubical switchgear (in kV)				
14.4	15.5	50	†	110
34.5	38.0	80	†	150
69.0	72.5	160	†	350

Source: Table based on IEEE Std C37.20-1987 [B25]. Notes based on IEEE Std C37.20.1-1987 [B26], IEEE Std C37.20.2-1987 [B27], and IEEE Std C37.20.3-1987 [B28].

*The column headed *DC withstand* is given as a reference only for those using dc tests to verify the integrity of connected cable installations without disconnecting the cables from the switchgear. It represents values believed the corresponding power frequency withstand test values specified for each voltage rating of switchgear. The presence of this column in no way implies any requirement for a dc withstand test on ac equipment or that a dc withstand test represents an acceptable alternative to the low-frequency withstand tests specified in this standard, either for design tests, production tests, conformance tests, or field tests. When making dc tests, the voltage should be raised to the test value in discrete steps and held for a period of 1 min.

†Because of the variable voltage distribution encountered when making dc withstand tests, the manufacturer should be contacted for recommendations before applying dc withstand tests to the switchgear. Voltage transformers above 34.5 kV should be disconnected when testing with dc. See IEEE Std C57.13-1978 [B35], Section 8, and in particular, 8.8.2 (the last paragraph), which reads "Periodic kenotron tests should not be applied to transformers of higher than 34.5 kV voltage rating."

--`,,`,,`-`-`,,`,,`,`,,`---

Copyright The Institute of Electrical and Electronics Engineers, Inc.
Provided by IHS under license with IEEE
No reproduction or networking permitted without license from IHS Not for Resale

[B31]. The short-circuit withstand level and duration capabilities of switchgear assemblies and metal-enclosed bus must be completely coordinated with the operating characteristics of the power system line-side interrupter.

The continuous-current rating of the switchgear main bus must be no less than that of the highest rated overcurrent device or through current to which it must be subjected. The rated continuous current of a switchgear assembly is the maximum current in rms amperes, at rated frequency, that can be carried continuously by the primary circuit components without causing temperatures in excess of the limits specified in IEEE Std 37.20.1-1987 [B26]. The standard ratings of the main bus in ac low-voltage switchgear are 600 A, 800 A, 1200 A, 1600 A, 2000 A, 3000 A, 3200 A, or 4000 A, and in dc low-voltage switchgear are 1600 A, 2000 A, 2500 A, 4000 A, 5000 A, 6000 A, 8000 A, 10 000 A, and 12 000 A (IEEE Std C37.20.1-1987).

The continuous-current rating of the vertical and section bus riser shall be equal to the frame size of ac low-voltage power circuit breaker used except any modification required for cumulating loading of multiple breakers (IEEE Std C37.20.1-1987 [B26]).

The momentary and short-time short-circuit current ratings of power switchgear assemblies shall correspond to the equivalent ratings of the switching or interrupting devices used.

The limiting temperature for a power switchgear assembly or metal-enclosed bus (where applicable) is the maximum temperature permitted for the following:

a) Any component, such as insulation, buses, instrument transformers, and switching and interrupting devices;
b) Air in cable termination compartments;
c) Any non-current-carrying structural parts;
d) For the air adjacent to devices;
e) The operating temperature of the cable(s) connected to all switchgear termination lugs, while at maximum cable loading, must not exceed the rated temperature of the terminals.

The information regarding temperature limits of insulating materials (hottest spots), buses and connections (hottest spots), and temperature limitations for air surrounding devices within an enclosed assembly and surrounding insulated power cables can be obtained from IEEE Std C37.20.1-1987 [B26].

10.3.5 Application guides

After determining system requirements for continuity of service, reliability, security, and safety, the engineer should establish initial system capacity and provisions for future load growth.

From this data, the engineer can establish maximum fault duty and select the type of power switching apparatus for the primary and secondary distribution systems. For the primary system, the choice is between circuit breaker and switch-fuse combinations. For the secondary system, the choice is between fused and unfused power circuit breaker combinations and switch-fuse combinations.

--`,,`,,`-`-`,,`,,`,`,,`---
Copyright The Institute of Electrical and Electronics Engineers, Inc.
Provided by IHS under license with IEEE
No reproduction or networking permitted without license from IHS Not for Resale

The following steps are normally taken in applying switchgear equipment:

a) Develop a one-line diagram
b) Determine short-circuit rating
c) Determine rating of power switching apparatus
d) Select main bus rating
e) Select current transformers
f) Select voltage transformers
g) Select metering, relaying, and control power
h) Determine closing, tripping, and other control power requirements
i) Consider special applications

Metal-enclosed switchgear is available for application at voltages through 34.5 kV. Metal-clad switchgear is available for application at voltages from 2.4 kV through 34.5 kV; however, it is seldom used above 15kV for economic reasons. Gas-insulated switchgear is available for higher voltage.

Metal-enclosed switchgear is adaptable to many applications because it is easily expanded and can be specified and designed with load location and load characteristics in mind. If metal-enclosed switchgear with drawout-interrupting devices is applied, maintenance is facilitated because of the accessibility of most components. On the average, metal-enclosed switchgear represents a small percentage of total plant cost. Metal-enclosed switchgear is generally shipped factory-assembled and pretested and reduces the amount of expensive field assembly.

Essentially, all recognized basic bus arrangements, radial, double bus, circuit breaker and half, main, and transfer bus, sectionalized bus, synchronizing bus, and ring bus are available in metal-enclosed switchgear to ensure the desired system reliability and flexibility. A choice is made based on an evaluation of initial cost, installation cost, required operating procedures, and total system requirements.

The switchgear assembly should have momentary and short-time ratings equal, respectively, to the close-and-latch capability and short-time rating of the circuit breaker or short circuit rating at the fused switch.

Current transformers (CTs) are used to develop scale replica secondary currents, separated from the primary current and voltage, to provide a readily usable current for application to instruments, meters, relays, and analog communication with computers. For switchgear applications, CTs are manufactured in single and double secondary types and the tapped multiratio type. The double secondary is suitable where two transformers of the same ratio would otherwise be required at the same location, with a resulting saving in space. The primary current rating should be no less than 125% of the ultimate full-load current of the circuit.

The metering and relaying accuracy must be adequate for the burdens imposed upon the current transformer. The current transformer accuracy and excitation characteristics must be checked for proper relay application. Tables 10-6 and 10-7 list standard ratios and relaying and metering accuracies for current transformers.

Copyright The Institute of Electrical and Electronics Engineers, Inc.
Provided by IHS under license with IEEE
No reproduction or networking permitted without license from IHS Not for Resale

Table 10-6—Standard accuracy class rating* current transformers in ac low-voltage switchgear

Ratio	B 0.1	B 0.2
100:5	1.2	2.4†
150:5	1.2	2.4†
200:5	1.2	0.6
300:5	0.6	0.6
400:5	0.6	0.6
600:5	0.6	0.3
800:5	0.3	0.3
1200:5	0.3	0.3
1500:5	0.3	0.3
2000:5	0.3	0.3
3000:5	0.3	0.3
4000:5	0.3	0.3
5000:5	0.3	0.3
6000:5	0.3	0.3

Source: Reprinted from IEEE Std C37.20.1-1987 [B26].

*See IEEE Std C57.13-1978 [B35].

†Not in IEEE Std C57.13-1978 [B35].

Voltage transformers (VTs) are used to transform primary voltage to a nominal safe value, usually 120 V. The primary rating is normally that of the system voltage, although slightly higher ratings may be used, i.e., a 14 400 V rating on a 13 800 V nominal system. These transformers are used to isolate the primary voltages from the instrumentation, metering, and relaying systems, yet provide replica scale values of the primary voltage. All ratings, such as impulse, dielectric, etc., should be adequate for the purpose. Table 10-8 lists standard voltage transformer ratios.

10.3.6 Control power

Successful operation of switchgear embodying electrically operated devices is dependent on a reliable source of control power that will maintain voltage at all times at the terminals of all devices within their rated operating voltage range. See table 10-9.

Copyright The Institute of Electrical and Electronics Engineers, Inc.
Provided by IHS under license with IEEE
No reproduction or networking permitted without license from IHS Not for Resale

Table 10-7—Standard accuracy class ratings* current transformers in metal-clad switchgear

Ratio	Metering accuracy 60 Hz standard burdens					Relaying accuracy
	B 0.1	B 0.2	B 0.5	B 1.0	B 2.0	
50:5†	1.2	2.4‡	—	—	—	C or T 10
75:5†	1.2	2.4‡	—	—	—	C or T 10
100:5	1.2	2.4‡	—	—	—	C or T 10
150:5	0.6	1.2	2.4‡	—	—	C or T 20
200:5	0.6	1.2	2.4‡	—	—	C or T 20
300:5	0.6	1.2	2.4‡	2.4‡	—	C or T 20
400:5	0.3	0.6	1.2	1.2	2.4‡	C or T 50
600:5	0.3	0.3	0.3	1.2	2.4‡	C or T 50
800:5	0.3	0.3	0.3	0.6	1.2	C or T 50
1200:5	0.3	0.3	0.3	0.3	0.3	C 100
1500:5	0.3	0.3	0.3	0.3	0.3	C 100
2000:5	0.3	0.3	0.3	0.3	0.3	C 100
3000:5	0.3	0.3	0.3	0.3	0.3	C 100
4000:5	0.3	0.3	0.3	0.3	0.3	C 100

Source: Reprinted from IEEE Std C37.20.2-1987 [B27].

*See IEEE Std C57.13-1978 [B35].

†These ratios and transformer accuracies do not apply for metal-clad switchgear assemblies having rated momentary current above 60 000 A rms. Where such assemblies have a rated momentary current above 60 000 A rms, the minimum current transformer ratio shall be 100:5.

‡This metering accuracy is not in IEEE Std C57.13-1978 [B35].

Copyright The Institute of Electrical and Electronics Engineers, Inc.
Provided by IHS under license with IEEE
No reproduction or networking permitted without license from IHS
Not for Resale

Table 10-8—Standard voltage transformer ratios

2400/4160Y–120
2400–120
4200–120
4800–120
7200–120
8400–120
12 000–120
14 000–120

Table 10-9—Preferred control voltages and their ranges for low-voltage power circuit breakers and ac power circuit protectors*

	Voltage ranges†, ‡, §, **	
Nominal voltage	**Closing and auxiliary functions**	**Tripping functions**
Direct current††		
24‡‡	—	14–28
48‡‡	38–56	28–56
125	100–140	70–140
250	200–280	140–280
	Voltage ranges†, ‡, §, **, §§	
Nominal voltage (60 Hz)	**Closing, tripping, and auxiliary functions**	
Alternating current—single phase		
120	104–127***, †††	
240	208–254***	
480	416–508***	
Alternating current—polyphase		
208Y/120	180Y/104–220Y/127	
240	208–254	
480	416–508	
480Y/227	416Y/240–508Y/292	

Source: Based on ANSI C37.16-1988 [B2].

NOTE—See IEEE Std C37.13-1990 [B22], IEEE Std C37.14-1979 [B23], IEEE Std C37.18-1979 [B24], and IEEE Std C37.29-1981 [B30].

*When measured at the control power terminals of the operating mechanisms with the maximum operating current flowing, nominal voltages and their permissible ranges for the control power supply of switching and interrupting devices shall be as shown above.

--`,,`,,`-`-`,,`,,`,`,,`---
Copyright The Institute of Electrical and Electronics Engineers, Inc.
Provided by IHS under license with IEEE
No reproduction or networking permitted without license from IHS Not for Resale

Table 10-9—Preferred control voltages and their ranges for low-voltage power circuit breakers and ac power circuit protectors* (continued)

†Relays, motors, or other auxiliary equipment that function as a part of the control for a device shall be subject to the voltage limits imposed by this standard, whether mounted at the device or at a remote location.

‡The performance capability of an individual device over the full range of closing, auxiliary, and tripping voltages specified here shall be as defined in the C37 standard that covers the particular device.

§Switchgear devices in some applications may be exposed to control voltages exceeding those specified here owing to abnormal conditions, such as abrupt changes in line loading. Such applications require specific study, and the manufacturer should be consulted. Also, application of switchgear devices containing solid-state control exposed continuously to control voltages approaching the upper limits of ranges specified here requires specific attention, and the manufacturer should be consulted before application is made. Mining circuit breakers may require control voltages as high as 325 Vdc.

**Some solenoid operating mechanisms are not capable of satisfactory performance over the range of voltage specified here; moreover, two ranges of voltage may be required for such mechanisms to achieve a satisfactory level of performance. For these solenoid-operated devices, the following table is applicable:

Rated Voltage (dc)	Closing voltage ranges for power supply
125	90–115 or 105–130
250	180–230 or 210–260
230	190–230 or 210–250

The preferred method of obtaining the double range of closing voltage is by use of tapped coils. Otherwise it will be necessary to designate one of the two closing voltage ranges listed above at representing the condition existing at the device location owing to battery or lead voltage drop or control power-transformer regulation. Also, caution should be exercised to ensure that the maximum voltage of the range used is not exceeded if the solenoid operator is energized during the time the station battery is on equalizing charge.

††It is recommended that the coils of closing, auxiliary, and tripping devices that are directly connected to one dc potential be connected to the negative control bus so as to minimize electrolytic deterioration.

‡‡24 V tripping or 48 V tripping, closing, and auxiliary functions are recommended only when the device is located near the battery or where special effort is made to ensure the adequacy of conductors between battery and control terminals. 24 V closing is not recommended.

§§Includes supply for pump or compressor motors.

***Includes heater circuits.

†††Shunt trip devices used with remote mounted ground-fault relaying must operate at 50% of the nominal voltage ratings.

There are two primary uses for control power in switchgear: tripping power and closing power. Since an essential function of switchgear is to provide instant and unfailing protection in emergencies, the source of tripping power must always be available. The requirements for the security of the source of closing power are less rigid, and other options are available. For devices of 1000 V and below, manual closing for devices through 1600 A frame is a common practice.

Four practical sources of tripping power are as follows:

a) Direct current from a storage battery
b) Direct current from a charged capacitor

Copyright The Institute of Electrical and Electronics Engineers, Inc.
Provided by IHS under license with IEEE
No reproduction or networking permitted without license from IHS Not for Resale

c) Alternating current from the secondaries of current transformers in the protected power circuit
d) Direct or alternating current in the primary circuit passing through direct-acting trip devices

Where a storage battery has been chosen as a source of tripping power, it can also supply closing power. The battery ampere-hour and inrush requirements have been reduced considerably with the advent of the stored-energy spring mechanism closing on power circuit breakers through 34.5 kV. General distribution systems, whether ac or dc, cannot be relied upon to supply tripping power because outages are always possible. These are most likely to occur in times of emergency, when the switchgear is required to perform its protective functions.

Other factors influencing the choice of control power are as follows:

a) Availability of adequate maintenance for a battery and its charger
b) Availability of suitable housing for a battery and its charger
c) Advantages of having removable circuit breaker units interchangeable with those in other installations
d) Necessity for closing overcurrent devices with the power system de-energized

The importance of periodic maintenance and testing of the tripping power source cannot be overemphasized. The most elaborate protective relaying system is useless if tripping power is not available to open the overcurrent device under abnormal conditions. Alarm monitoring for abnormal conditions of the tripping source and for circuits is a general requirement.

Space heaters are supplied as a standard feature on outdoor metal-enclosed switchgear. Often ambient temperatures or other environmental conditions dictate the use of space heaters in indoor switchgear as well. When space heaters are furnished, they should be continuously energized from an ac power source. Since heaters are usually needed when the switchgear is out of service, a separate source of heater power is desirable.

Standard air-magnetic or vacuum power circuit breakers are rated at 60 Hz, but can be applied as low as 50 Hz without derating. For a 25 Hz application, however, there is a derating factor that should be applied to the circuit breaker interrupting rating. Equipment manufacturers should be consulted to determine the proper derating factor for low-frequency power switchgear applications.

The application of metal-enclosed switchgear in contaminated atmospheres may create many problems if adequate precautions are not taken. Typical precautions include, but are not limited to, the following:

a) Location of equipment away from localized sources of contamination and potential sources of moisture, such as steam pipes and traps, water pipes, etc.
b) Isolation of equipment through the use of air-conditioning or pressurization equipment
c) Development of an appropriate supplemental maintenance program
d) Maintenance of adequate spare-part replacements

Copyright The Institute of Electrical and Electronics Engineers, Inc.
Provided by IHS under license with IEEE
No reproduction or networking permitted without license from IHS Not for Resale

10.4 Transformers

10.4.1 Classifications

Transformers have many classifications that are useful in the industry to distinguish or define certain characteristics of design and application. Some of these classifications are described in the following subclauses.

10.4.1.1 Distribution and power

These are two classifications based on the rating of transformers measured in kilovolt-amperes. The distribution type covers the range of 3 to 500 kVA; the power type covers all ratings above 500 kVA.

10.4.1.1.1 K-factor-rated transformers

Transformers are subjected to nonlinear, nonsinusoidal (harmonic) currents from loads caused by equipment such as computers, copiers, fax machines, electronic ballasts, high-intensity discharge lighting, rectifiers, uninterruptible power supply systems, induction furnaces, welders, overhead cranes, and adjustable frequency drives. Transformers serving nonlinear loads exhibit increased winding (eddy current) losses that can cause overheating due to harmonic currents generated by these loads. Voltage harmonics can also cause additional losses in the core, but in most practical cases the harmonic-current-related winding losses are the limiting factor affecting a transformer's capacity. Skin effect also can play a role at high frequencies and larger diameter conductors, but is not considered practical in most 60 Hz power system applications.

Those harmonic currents that are multiples of three, such as third, sixth, ninth, etc., are called triplen harmonics. When triplen harmonics are present in the phase conductors of a three-phase system, they add together in the neutral conductor. In the case of third harmonics, the result is a high 180 Hz current flowing through neutral cables, panelboard neutrals, and transformer neutral terminals. Thus, transformers expected to supply nonlinear loads should be oversized by a factor depending upon the severity of the harmonics.

Since many loads today exceed the harmonic-current limit of 0.05 per unit specified for "usual service conditions" of liquid and dry transformers as specified in both IEEE Std C57.12.00-1987 [B32] and IEEE Std C57.12.01-1989 [B33], IEEE Std C57.110-1986 [B39] was developed. This guide establishes a method for evaluating the effects of the higher eddy current loss on the heating of transformer windings. An equation presented in IEEE Std C57.110-1986 includes a tabulation of the per-unit current squared times the frequency squared that, when summed up for each harmonic, produces a value referred to as the K-factor. The K-factor is related to the eddy-current loss in the winding conductors.

Transformer manufacturers have units to supply nonlinear loads, while remaining within specified temperature limits. Those transformers are given K-factor ratings. It should be

Copyright The Institute of Electrical and Electronics Engineers, Inc.
Provided by IHS under license with IEEE
No reproduction or networking permitted without license from IHS Not for Resale

noted that K-factor-rated transformers do not eliminate harmonics any more than does a standard unit. K-factor ratings of 4, 13, 20, 30, 40, and 50 are available, with the higher K-factor ratings indicating an ability to handle progressively more harmonic current. K-rated transformers should be used whenever the load being served might contain any appreciable percentage of nonlinear loads.

In addition to dealing with the effects of harmonic currents, new technology is being employed to limit voltage harmonics that occur in power transformers. Depending upon the design of the standard transformer, voltage distortion does occur. While a supply voltage may have a voltage harmonic distortion of as low as 1%, a secondary output voltage may have a voltage distortion of from 3% or greater.

Transformers manufactured to deal with harmonic currents and carry K-factor ratings are built to the following specifications:

a) Eddy current losses are held to a minimum;
b) The core is designed for low flux density;
c) Neutral conductors have increased capacity;
d) An electrostatic shield is placed between the primary and the secondary windings;
e) Effort is made to significantly reduce the harmonic voltage distortion between the primary input and the secondary output voltages.

Totally enclosed, nonventilated, K-factor-rated transformers are available for dusty or dirty environments, such as automotive plants, pulp and paper mills, glass plants, and chemical plants. These units are larger, heavier, and more expensive than ventilated units but are ideal for use in difficult environments.

10.4.1.1.2 Autotransformer

In this type of transformer the primary and secondary windings are electrically connected so that part of the winding is common to both the primary and secondary. A simplified circuit of an autotransformer is shown in figure 10-1.

In this figure, an input voltage V_1 is applied across *XZ*, which has N_1 turns. The exciting current flows in the winding through *XYZ*, so the secondary voltage V_2, across *YZ*, is $\frac{N_2 \cdot V_1}{N_1}$ with N_2 being the number of turns in *YZ*.

In an autotransformer, part of the power is transformed by conduction and the other part is by transformer action. This is the fundamental difference between a potential divider and an autotransformer. In a potential divider, almost the entire power flows by conduction, creating more losses than in the autotransformer. The input current in a potential divider must be higher than the output current, but in an autotransformer this is not the case.

Copyright The Institute of Electrical and Electronics Engineers, Inc.
Provided by IHS under license with IEEE
No reproduction or networking permitted without license from IHS Not for Resale

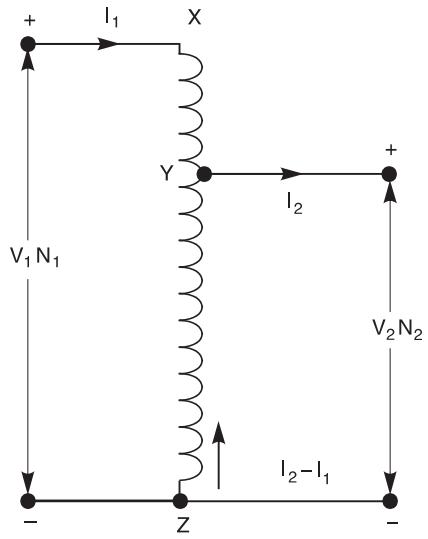

Figure 10-1—Typical autotransformer

In general, autotransformers are used when the transformation ratio is three or less and the electrical isolation of the two windings is not required. The application of autotransformers includes the following:

a) Power distribution (lowering and raising voltage level)—"buck-boost" operation
b) Induction motor starters on a selected basis
c) Small variable-voltage power supply units

A characteristic use of autotransformers is illustrated by the following example. In the past, 600 V systems were common within certain industries. The conversion to 480 V could be accomplished by the use of a standard 480 to 120 V transformer. The 480 V winding was connected in series with the 120 V winding, thus obtaining 600 V. The neutral was common to both systems. After the source was converted to 480 V, the same buck-boost transformer could be turned around and used to convert 480 V to 600 V for the remaining equipment until it could be converted to the 480 V level. At the conclusion of the conversion, the standard 480 to 120 V transformer could be used for lighting use. Thus, the same transformer served three purposes. Their application is covered in Article 450 of the NEC [B15].

The advantages of autotransformers are as follows:

a) For the same input and output; the weight of conductor, core material, and insulation of an autotransformer is less than that of a two-winding transformer:

$$\begin{pmatrix}\text{weight of conductor}\\ \text{in autotransformer}\end{pmatrix} = \left(1 - \frac{N_2}{N_1}\right) \cdot \begin{pmatrix}\text{weight of conductor in}\\ \text{two-winding transformer}\end{pmatrix}$$

Copyright The Institute of Electrical and Electronics Engineers, Inc.
Provided by IHS under license with IEEE
No reproduction or networking permitted without license from IHS
Not for Resale

Thus, if the transformation ratio is close to unity, the autotransformer is much less expensive than an equal-sized two-winding transformer.

b) The efficiency of an autotransformer is higher than that of a two-winding transformer for the following reasons:
   1) Fewer windings result in lower losses.
   2) Since part of the energy transfer takes place by conduction, the exciting current is lower, creating lower reactance and losses.

c) The reduction of ohmic resistance by reduction of conductor material, as well as the reduction of impedance by reduction of leakage flux and reactance due to presence of common winding, produce lower leakage impedance, thus creating a superior voltage regulation.

The disadvantages of autotransformers are as follows:

a) The electrical connection between primary and secondary winding can be hazardous in step-down operations when an open circuit occurs in the common winding (the low-voltage side will experience high voltage).
b) The available fault current is higher than the comparable two-winding transformer because of the inherently lower impedance.
c) The autotransformer provides less of a barrier to the transmission of electrical noise than does a comparable two-winding transformer.

10.4.1.2 Substation or unit substation transformer

The term, substation transformer, usually denotes a power transformer with direct cable or overhead line termination facilities that distinguish it from a unit substation transformer designed for integral connection to primary or secondary switchgear, or both, through enclosed bus connections. The substation classification is further defined by the terms primary and secondary. The primary substation transformer has a secondary or load-side voltage rating of 1000 V or higher, whereas the secondary substation transformer has a load-side voltage rating of less than 1000 V.

Most transformer ratings and design features have been standardized by ANSI and NEMA, and these are listed as such in manufacturers' publications. The selection of other than standard ratings will usually result in higher costs.

10.4.2 Specifications

In specifying a transformer for a particular application, the following items comprising the rating structure should be included:

a) Rating in kilovoltamperes or megavoltamperes
b) Single-phase or three-phase
c) Frequency
d) Voltage ratings
e) Voltage taps

--`,,`,,`-`-`,,`,,`,`,,`---

Copyright The Institute of Electrical and Electronics Engineers, Inc.
Provided by IHS under license with IEEE
No reproduction or networking permitted without license from IHS Not for Resale

f) Winding connections, delta or wye
g) Impedance (base rating)
h) Basic impulse insulation level (BIL)
i) Temperature rise

The desired construction details to be specified should include the following:

a) Insulation medium, dry or liquid type (see 10.4.7)
b) Indoor or outdoor service
c) Accessories
d) Type and location of termination facilities
e) Sound level limitations if the installation site requires this consideration
f) Manual or automatic load tap changing
g) Grounding requirements
h) Provisions for future cooling of the specified type
i) Radiator type and thickness
j) Special painting requirements
k) Category of enclosure (A, B, or C) for personnel protection per Table 3 in ANSI C57.12.13-1982 [B4], or Table 1 in ANSI C57.12.55-1987 [B14]
l) Designation of enclosure type (103, 103R, 103S, or 104) for outdoor hazardous locations per Table 9 in ANSI C57.12.13-1982 [B4], or Table 7 in ANSI C57.12.55-1987 [B14]

Consideration should be given to energy conservation features in the transformer specification which may, in some instances, be mandated by law or by individual company policy. Where efficiency is of concern, several cost-analysis techniques are used to formalize procurement decisions with the goal of maximizing efficiency or minimizing overall life-cycle cost. In either case, the following information about the transformer should be supplied to the prospective vendors based on annualized operating projections:

a) The cost in dollars/kW at which no-load losses are valued;
b) The cost in dollars/kW at which load losses are valued; and
c) The percentage of the transformer rating at which load losses will be evaluated during the bid-comparison process.

Given this information, a prospective vendor can then establish the optimum proportion of conductor and core material to be used in the construction of the transformer. In this manner, the cost of inefficiency can be factored into the initial capital expenditure. This process is detailed in IEEE Std 739-1984 [B42].

10.4.3 Power and voltage ratings

Ratings in kilovoltamperes or megavoltamperes will include the self-cooled rating at a specified temperature rise, as well as the forced-cooled rating if the transformer is to be so equipped. The standard self-cooled ratings, and self-cooled/forced-cooled relationships, are listed in tables 10-10 and 10-11. As a minimum, the self-cooled rating should be at least equal to the expected peak demand, with an allowance for projected load growth.

Copyright The Institute of Electrical and Electronics Engineers, Inc.
Provided by IHS under license with IEEE
No reproduction or networking permitted without license from IHS Not for Resale

Table 10-10—Liquid-immersed and dry-type transformer standard base kVA ratings

Single-phase				Three-phase			
1	50	833	8 333	15	300	3 750	25 000*
3	75	1250	10 000*	30	500	5 000	30 000*
5	100	1667	12 500*	45	750	7 500	37 500*
10	167	2500	16 667*	75	1000	10 000	50 000*
15	250	3333	20 000*	112½	1500	12 000	60 000*
25	333	5000	25 000*	150	2000	15 000	75 000*
37½	500	6667	33 000*	225	2500	20 000	100 000*

Source: Based on IEEE Std C57.12.00-1987 [B32] and IEEE Std C57.12.01-1989 [B33].

*Liquid-immersed transformer only.

The standard average winding temperature rise (by resistance test) for the modern liquid-immersed transformer is 65 °C, based on an average ambient of 30 °C (40 °C maximum) for any 24-hour period. Liquid-immersed transformers may be specified with a 55 °C/65 °C rise to permit 100% loading with a 55 °C rise, and 112% loading at the 65 °C rise. In addition, 115 °C rise, high-fire-point, liquid-immersed transformers are available from some manufacturers.

In NEMA TR 1-1980 [B47], IEEE Std C57.12.00-1987 [B32], and IEEE Std C57.12.01-1989 [B33], mention is made of three insulation classes, such as 150 °C, 185 °C, and 220 °C. The modern 220 °C insulation class dry-type transformer has an average winding temperature rise (by resistance) of 150 °C, based on an average ambient temperature of 30 °C, and a 24-hour period maximum ambient temperature of 40 °C. The allowable hot-spot winding temperature rise is 30 °C, resulting in a maximum hot spot temperature of 220 °C.

Low-loss, high-efficiency, dry-type transformers can be specified with 115 °C or 80 °C rise. These lower temperature rise units have longer life expectancies. For instance, a 115 °C transformer has a life expectancy about ten times greater than that of a 150 °C rise transformer. Dry-type transformers of 115 °C and 80 °C rise also have, respectively, an approximate emergency overload capability of 15% and 30%. However, most modern dry-type transformers 30 kVA and larger are designed with a UL-listed 220 °C insulation system.

Both liquid-immersed and dry-type transformers are available with lower core and coil watt loss designs at higher initial prices, but with significantly lower overall operating costs due to the higher energy efficiency.

Copyright The Institute of Electrical and Electronics Engineers, Inc.
Provided by IHS under license with IEEE
No reproduction or networking permitted without license from IHS Not for Resale

Table 10-11—Classes of transformer cooling systems

Class	Method of cooling
OA	Liquid-immersed, self-cooled
OA/FA	Liquid-immersed, self-cooled/forced-air-cooled
OA/FA/FA	Liquid-immersed, self-cooled/forced-air-cooled/forced-air-cooled
OA/FA/FOA	Liquid-immersed, self-cooled/forced-air-cooled/forced-liquid-cooled
OA/FOA/FOA	Liquid-immersed, self-cooled/forced-air, forced-liquid-cooled/forced-air, forced-liquid-cooled
FOA	Liquid-immersed, forced-liquid-cooled with forced-air-cooled
FOW	Liquid-immersed, forced-liquid-cooled with forced-water-cooled
OW	Liquid-immersed, water-cooled
OW/A	Liquid-immersed, water-cooled/self-cooled
AA	Dry-type,* ventilated self-cooled
AFA	Dry-type,* ventilated forced-air-cooled
AA/FA	Dry-type,* ventilated self-cooled/forced-air-cooled
ANV	Dry-type,* non-ventilated, self-cooled
GA	Dry-type,* sealed self-cooled

Source: Based on IEEE Std C57.12.00-1987 [B32] and IEEE Std C57.12.01-1989 [B33]

*Dry-type: Including those with solid cast and/or resin-encapsulated winding.

Transformers have certain overload capabilities, varying with ambient temperature, preloading, and overload duration. These capabilities are defined in IEEE Std C57.92-1981 [B36] and IEEE Std C57.96-1989 [B37] for both the liquid-insulated and dry types.

The substation transformer for industrial plant service is an integral three-phase unit, as compared to three single-phase units. The advantages of the three-phase unit, such as lower cost, higher efficiency, less space, and elimination of exposed interconnections, have contributed to its widespread acceptance.

The transformer voltage ratings will include the primary and secondary continuous-duty levels at the specified frequency, as well as the BIL for each winding. The continuous rating specified for the primary winding will be the nominal line voltage of the system to which the

Copyright The Institute of Electrical and Electronics Engineers, Inc.
Provided by IHS under license with IEEE
No reproduction or networking permitted without license from IHS Not for Resale

transformer is to be applied, and preferably within ±5% of the normally sustained voltage. The secondary or transformed voltage rating will be the value under no-load conditions. The change in secondary voltage experienced under load conditions is termed regulation, and is a function of the impedance of the system and the transformer and the power factor of the load. Table 10-12 illustrates the proper designation of voltage ratings.

The BIL for a transformer winding signifies the design and tested capability of its insulation to withstand transient overvoltages from lightning and other surges. Standard values of BIL established for each nominal voltage class are listed in tables 10-13 and 10-14. A description of test requirements for these values is given in IEEE Std C57.12.00-1987 [B32]. Transformer bushings may be specified with extra creepage distance and higher than standard BIL ratings, if required by local conditions or users' practices.

Protecting the transformer windings from high-voltage surges with surge arresters will allow the use of a transformer with a lower BIL and still provide for better performance. For high voltage and high kVA-rated performance transformers, this will also result in lower transformer cost. Refer to Chapter 6 for a discussion on arrester application for the overvoltage protection of transformers.

10.4.4 Voltage taps

Voltage taps are usually necessary to compensate for small changes in the primary supply to the transformer, or to vary the secondary voltage level with changes in load requirements. The most commonly selected tap arrangement is the manually adjustable no-load type, consisting of four ± 2½% steps or variations from the nominal primary voltage rating. These tap positions are usually numbered one through five, with the number one position providing the greatest number of effective turns. Based on a specific incoming voltage, selection of a higher voltage tap (lower tap number) will result in a lowering of the output voltage. The changing of tap positions is performed manually only with the transformer de-energized. In addition to the no-load taps, automatic tap-changing under load is available. This feature is considered desirable when load swings are larger and more frequent or voltage levels more critical. Automatic tap-changing under load can provide an additional automatic voltage adjustment, typically ±10%, in incremental steps, with continuous monitoring of the secondary terminal voltage or of a voltage level remote from the transformer.

10.4.5 Connections

Connections for the standard two-winding power transformers are preferably delta-primary and wye-secondary. The wye-secondary, specified with external neutral bushing, provides a convenient neutral point for establishing a system ground, or can be run as a neutral conductor for phase-to-neutral load. The delta-connected primary isolates the two systems with respect to the flow of zero-sequence currents resulting from third-harmonic exciting current, secondary generated triplens due to non-linear loads, or a secondary ground fault, and may be used without regard to whether the system to which the primary is connected is three-wire or four-wire.

Copyright The Institute of Electrical and Electronics Engineers, Inc.
Provided by IHS under license with IEEE
No reproduction or networking permitted without license from IHS Not for Resale

Table 10-12(a)—Designation of voltage ratings of single-phase windings (schematic representation)

Identification	Nomenclature	Nameplate marking	Typical winding diagram	Condensed usage guide
(1)(a)	E	2400		E shall indicate a winding of E volts which is suitable for Δ connection on an E volt system.
(1)(b)	E/E_1Y	2400/4160Y		E/E_1Y shall indicate a winding of E volts which is suitable for Δ connection on an E volt system or for Y connection on an E_1 volt system.
(1)(c)	E/E_1GrdY	2400/4160GrdY		E/E_1GrdY shall indicate a winding of E volts having reduced insulation which is suitable for Δ connection on an E volt system or Y connection on an E_1 volt system, transformer neutral effectively grounded.
(1)(d)	E_1GrdY/E	12 470GrdY/7200		E_1GrdY/E shall indicate a winding of E volts with reduced insulation at the neutral end. The neutral end may be connected directly to the tank for Y or for single-phase operation on an E_1 volt system, provided the neutral end of the winding is effectively grounded.
(1)(e)	E/2E	120/240	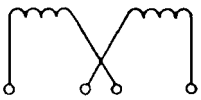	E/2E shall indicate a winding, the sections of which can be connected in parallel for operation at E volts, or which can be connected in series for operation at 2E volts, or connected in series with a center terminal for three wire operation at 2E volts between the extreme terminals and E volts between the center terminal and each of the extreme terminals.
(1)(f)	2E/E	240/120	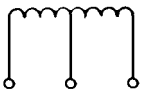	2E/E shall indicate a winding for 2E volts, two-wire full kVA between extreme terminals, or 2E/E volts three-wire service with $^1/_2$ kVA available only, from midpoint to each extreme terminal.
(1)(g)	$V \times V_1$	240 × 480 2400/4160Y × 4800/8320Y	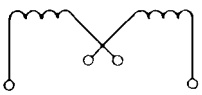	$V \times V_1$ shall indicate a winding for parallel or series operation only but not suitable for three-wire service.

Source: Reprinted from IEEE Std C57.12.01-1989 [B33].

Key: $E_1 = \sqrt{3}\ E$

Copyright The Institute of Electrical and Electronics Engineers, Inc.
Provided by IHS under license with IEEE
No reproduction or networking permitted without license from IHS
Not for Resale

Table 10-12(b)—Designation of voltage ratings of three-phase windings (schematic representation)

Identification	Nomenclature	Nameplate marking	Typical winding diagram	Condensed usage guide
(2)(a)	E	2400	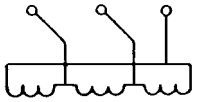	E shall indicate a winding of E volts which is suitable for Δ connection on an E volt system.
(2)(b)	E_1Y	4160Y	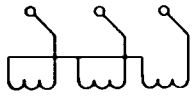	E/E_1Y shall indicate a winding of E volts which is suitable for Δ connection on an E volt system or for Y connection on an E_1 volt system.
(2)(c)	E_1Y/E	4160Y/2400	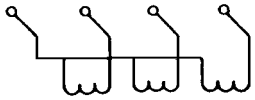	E_1Y shall indicate a winding which is permanently Y connected with a fully insulated neutral brought out for operation on an E_1 volt system, with E volts available from line to neutral.
(2)(d)	E/E_1Y	2400/4160Y	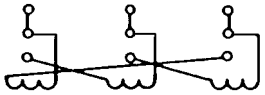	E/E_1Y shall indicate a winding which may be Δ connected for operation on an E volt system, or may be Y connected without a neutral brought out (isolated) for operation on an E_1 volt system.
(2)(e)	E/E_1Y/E	2400/4160Y/2400	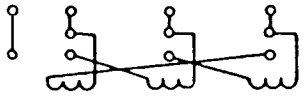	E/E_1Y/E shall indicate a winding which may be Δ connected for operation on an E volt system or may be Y connected with a fully insulated neutral brought out for operation on an E_1 volt system with E volts available from line to neutral.
(2)(f)	E_1GrdY/E	34 500GrdY/ 19 920	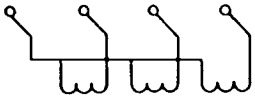	E_1GrdY/E shall indicate a winding with reduced insulation and permanently Y connected, with a neutral brought out and effectively grounded for operation on an E_1 volt system with E volts available from line to neutral.
(2)(g)	E/E_1GrdY/E	7200/12 470GrdY/ 7200	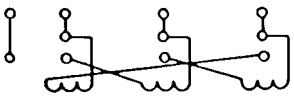	E/E_1GrdY/E shall indicate a winding, having reduced insulation, which may be Δ connected for operation on an E volt system or may be connected Y with a neutral brought out and effectively grounded for volt system with E volts available from line to neutral.

Source: Reprinted from IEEE Std C57.12.01-1989 [B33].

Key: $E_1 = \sqrt{3}\,E$

Copyright The Institute of Electrical and Electronics Engineers, Inc.
Provided by IHS under license with IEEE
No reproduction or networking permitted without license from IHS
Not for Resale

Table 10-12(b)—Designation of voltage ratings of three-phase windings (schematic representation) (continued)

Identification	Nomenclature	Nameplate marking	Typical winding diagram	Condensed usage guide
(2)(h)	$V \times V_1$	7200 × 14 400	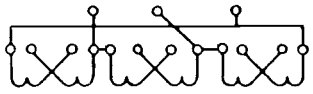	$V \times V_1$ shall indicate a winding, the sections of which may be connected in parallel to obtain one of the voltage ratings (as defined in a, b, c, d, e, f, and g) of V_1, or may be connected in series to obtain one of the voltage ratings (as defined in a, b, c, d, e, f, and g) of V_1. Windings are permanently Δ or Y connected.
		4160Y/2400 × 12 470Y/7200	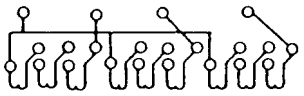	

Source: Reprinted from IEEE Std C57.12.01-1989 [B33].

Key: $E_1 = \sqrt{3}\ E$

In some installations a grounded primary wye-wye transformer connection is used to minimize the problem of ferroresonance. However, this connection introduces the problem of having to cope with zero-sequence quantities during conditions of circuit unbalance. There are two methods for balancing zero-sequence ampere turns:

a) Shell-form construction can be used to provide a low-reluctance return path for the single-phase zero-sequence flux. This construction would include the five- or four-legged core. The five-legged core is a three-phase core with five legs. Coils are mounted on three of the legs with the remaining two serving as a return path for magnetic flux. Thus, the five-legged core has a path for undesirable zero-sequence flux during unbalanced conditions.

b) A delta-connected tertiary winding could circulate the required balancing ampere turns. A primary grounded transformer with a delta tertiary or equivalent delta tertiary winding will provide a source of ground fault current to system ground faults. However, a careful study must be made to determine the impact of such a ground source on the system ground fault protection and coordination. The maximum ground fault current provided by this transformer for external faults must not result in operation of primary fuses or overcurrent devices. Additionally, the transformer components must be designed to be thermally adequate to carry the maximum unbalance currents expected during both unbalanced steady state and ground fault conditions. It should also be noted that if one primary conductor opens upstream, the tertiary winding may attempt to feed power to other loads downstream of the failure and cause an overload and eventual failure of the tertiary winding.

10.4.6 Impedance

The impedance voltage of a transformer is the voltage required to circulate rated current through one of two specified windings of a transformer when the other winding is short-circuited, and with the windings connected as they would be for rated-voltage operation.

Copyright The Institute of Electrical and Electronics Engineers, Inc.
Provided by IHS under license with IEEE
No reproduction or networking permitted without license from IHS Not for Resale

Table 10-13—Relationships of nominal system voltage to maximum system voltage and basic lightning impulse insulation levels (BIL) for systems 34.5 kV and below for liquid-immersed transformers

Application	Nominal system voltage (kV rms)	Basic lightning impulse insulation levels (BIL) in common use (kV crest)		
Distribution	1.2 2.5 5.0 8.7 155.0 25.0 34.5	30 **45** **60** **75** **95** **150** **200**	 125 **150**	 125
Power	1.2 2.5 5.0 8.7 15.0 25.0 34.5	**45** **60** **75** **95** **110** **150** **200**	30 **45** **60** **75** **95**	

Source: Based on IEEE Std C57.12.00-1987 [B32].

NOTES

1—BIL values in **bold typeface** are listed as standard in one or more of ANSI C57.12.10-1988 [B3], ANSI C57.12.20-1981 [B5], ANSI C57.12.21-1980 [B6], ANSI C57.12.22-1989 [B7], ANSI C57.12.23-1992 [B8], ANSI C57.12.24-1982 [B9], ANSI C57.12.25-1988 [B10], and ANSI C57.12.26-1992 [B11].

2—Single-phase distribution and power transformers and regulating transformers for voltage ratings between terminals of 8.7 kV and below are designed for both Y and Δ connection and are insulated for the test voltages corresponding to the Y connection, so that a single line of transformers serves for the Y and Δ applications. The test voltages for such transformers when operated Δ connected are, therefore, higher than needed for their voltage rating.

3—For series windings in transformers, such as regulating transformers, the test values to ground shall be determined by the BIL of the series windings rather than by the rated voltage between terminals.

4—Values listed as *nominal system voltage* in some cases (particularly voltages 34.5 kV and below) are applicable to other lesser voltages of approximately the same value. For example, 15 kV encompasses nominal system voltages of 14 440 V, 13 800 V, 13 200 V, 13 090 V, 12 600 V, 12 470 V, 12 000 V, 11 950 V, etc.

Impedance voltage is normally expressed as a percent value of the rated voltage of the winding in which the voltage is measured on the transformer self-cooled rating in kilovolt-amperes. The percent impedance voltage levels considered as standard for two-winding transformers are listed in tables 10-15 and 10-16, and a value specified above or below those listed may result in higher costs. The percent impedance voltage of a two-winding transformer shall have a tolerance of 7.5% of the specified value. For three-winding or autotransformers, the manufacturing tolerance is ±10%. The manufacturing tolerance is ±10% from the specified impedance if the specified impedance is less than or equal to 2.5%, and

Copyright The Institute of Electrical and Electronics Engineers, Inc.
Provided by IHS under license with IEEE
No reproduction or networking permitted without license from IHS Not for Resale

Table 10-14—Relationships of nominal system voltage and basic lightning impulse insulation levels (BILs) for systems 34.5 kV and below for dry-type transformers

Nominal system voltage (kV)	Basic lightning impulse insulation levels (BILs) in common use (kV crest)									
	10	20	30	45	60	95	110	125	150	200
1.2	S	1	1							
2.5		S	1	1						
5.0			S	1	1					
8.7				S	1	1				
15.0					S	1	1			
25.0						2	S	1	1	
34.5								2	S	1

Source: Reprinted from IEEE Std C57.12.01-1989 [B33].

NOTES
S = Standard values.
1 = Optional higher levels where exposure to overvoltage occurs and higher protective margins are required.
2 = Lower levels where surge arrester protective devices can be applied with lower spark-over levels.

±7.5% if it is over 2.5%. When considering a low-impedance voltage level, as compared to figures shown in tables 10-15 and 10-16, it should be remembered that the standard transformer is designed with a limited ability to withstand the stresses imposed by external faults. Refer to IEEE Std C57.12.00-1987 [B32] for short-circuit requirements and IEEE Std C57.12.90-1987 [B34] for short-circuit test levels. A combined primary system and transformer impedance voltage permitting rms symmetrical fault magnitudes in excess of these standards should be avoided.

With respect to impedance, transformers are generally considered suitable for parallel operation if their impedances match within 5%. The importance of minimizing the mismatch becomes greater as the total load approaches the combined capacity of the paralleled transformers, since load division is inversely proportional to the internal impedance. The impedance mismatch should be checked throughout the entire range of taps (both load and no-load).

10.4.7 Insulation

This classification includes three types: liquid, dry, and combination. The liquid-immersed type can be further defined by the types of liquid used: mineral oil, nonflammable, or low-

Copyright The Institute of Electrical and Electronics Engineers, Inc.
Provided by IHS under license with IEEE
No reproduction or networking permitted without license from IHS Not for Resale

Table 10-15—BIL and percent impedance voltages at self-cooled (OA) rating for liquid-immersed transformers (833/958 kVA and above—single-phase 750/860 kVA and above—three-phase)

High-voltage BIL (kV)	Without load tap changing		With load tap changing
	Low voltage 480V	Low voltage 2400 V and above	Low voltage 2400 V and above
60–110	5.75*	5.5*	—
150	6.75	6.5	7.0
200	7.25	7.0	7.5

Source: Based on Table 10 of ANSI C57.12.10-1988 [B3].

NOTE—This table covers general percentage impedances values accepted industry-wide. Above-referenced values should be utilized, and manufacturers should be consulted for the transformers not included in the tables.

*For transformers greater than 5000 kVA self-cooled, these values shall be the same as those shown for 150 kV high-voltage BIL.

Table 10-16—BILs and percent impedance voltage for dry-type transformers (501 kVA and above)

High-voltage BIL (kV)	Low voltage	
	600 volts and below	2400 volts and above
60 and below	5.75	5.75
Above 60	See note	See note

Source: Based on Table 4 of ANSI C57.12.51-1981 [B12] and on ANSI C57.12.55-1981 [B13].

NOTE—In view of the relatively little experience industry has had in building and applying dry-type transformers above 15 kV high voltage, no consensus regarding standard values of impedance has yet been established. Such impedances should be determined by discussion between users and manufacturers until experience is available to determine consensus values.

flammable liquids. The dry type includes the ventilated, cast coil, totally enclosed nonventilated, sealed gas-filled, and vacuum pressure impregnated (VPI) types. The third classification includes a combination liquid-, vapor-, and gas-filled unit.

Dry-type transformers are being manufactured by several manufacturers with the same BIL as liquid-immersed transformers. A choice may be considered of specifying either the same BIL for dry-type as for liquid-immersed types since they both are subject to the same environment as far as impulses and transients are concerned, or providing the power system with

Copyright The Institute of Electrical and Electronics Engineers, Inc.
Provided by IHS under license with IEEE
No reproduction or networking permitted without license from IHS Not for Resale

additional surge protection. Even though both dry and liquid-immersed transformers may be specified with the same BIL ratings, in severe environments having high levels of moisture or dirt, the sealed enclosure of the liquid-immersed (or the sealed or gas-filled dry) will maintain insulation levels better and with less maintenance.

10.4.7.1 Insulation medium

The selection of the insulation medium is dictated mainly by the installation site and cost. For outdoor installations, the mineral-oil-insulated transformer has widespread use due to its lowest cost and inherent weatherproof construction. When located close to combustible buildings, safeguards are required as specified by the NEC [B15], Article 450-27. For indoor installations refer to the NEC, Article 450-26.

Where mineral-oil-immersed transformers are installed, it may be necessary to provide means to prevent any escaped oil, including drips, from migrating into the environment.

The discontinuance of the use of PCB (polychlorinated biphenyls) liquid-immersed transformers to meet regulatory requirements has promoted the use of high-fire-point liquids, such as polyalpha olefins, silicones, and high-molecular-weight hydrocarbons. They are being used in applications previously applied to PCB transformers with the tacit approval of insurance and safety authorities, as specified in the NEC [B15], Article 450-23. In general, these high-fire-point liquids increase the cost of the transformer compared to mineral oil. These liquids should receive essentially the same care and maintenance that applies to conventional mineral-oil-immersed transformers. Per existing federal regulatory requirements, no new transformer installations may be made using PCB liquids.

Due to environmental pollution impact, the users of existing PCB-immersed transformers should consult the manufacturer of the transformer or the manufacturer of the liquid for selection as well as proper safeguards in the disposal of used liquid (see IEEE Std C57.102-1974 [B38]. All liquid-filled transformers must be properly labeled as to content, or if of unknown content, are assumed to be PCB-contaminated.

The ventilated dry-type transformer has application in industrial plants for indoor installation where floor space, weight, and regard for liquid maintenance and safeguards would be important factors. Since the BILs listed as “standard values” for the ventilated dry-type and gas-filled transformer windings are usually less than that of the liquid-immersed surge arresters should be included for the primary winding in order to obtain additional protection, or the optional higher BILs listed in IEEE Std C57.12.01-1989 [B33] should be specified.

The totally enclosed nonventilated dry-type transformer, the cast coil (where both the high- and low-voltage coils are cast), and the sealed or gas-filled dry-type transformer, although all more expensive than ventilated dry-type or mineral-oil-immersed units, are especially suitable for adverse environments. They require little maintenance, need no fire-proof vaults, and generally have lower losses than comparable ventilated or mineral-oil-immersed units. The same applies to the high-fire-point liquid-immersed transformers; however, when they are installed in combustible buildings or areas, automatic fire-extinguishing systems or vaults are required.

Copyright The Institute of Electrical and Electronics Engineers, Inc.
Provided by IHS under license with IEEE
No reproduction or networking permitted without license from IHS Not for Resale

Transformers over 35 000 V installed inside a building must be installed in vaults specified in B of Article 450 of the NEC [B15]. Less flammable liquid-immersed transformers must meet Section 450-23 of the NEC and must meet the specific requirements of Underwriters Laboratories or the Factory Mutual Corporation for these types of liquids.

On oil-immersed transformers, a sealed-tank construction and welded cover is standard practice with manufacturers. Optional oil-preservation systems may be specified as follows:

a) A gas-oil seal that consists of an auxiliary tank mounted on the transformer. This seal provides for the safe expansion and contraction of the transformer gas and oil without exposing the transformer oil to the atmosphere. This option is now rarely used.
b) An automatic gas seal that maintains a constant positive nitrogen pressure within the tank. A combination regulating valve and pressure relief operates with a cylinder of high-pressure nitrogen to control the proper functioning of this seal.

10.4.8 Accessories

Accessories furnished with the transformer include those identified as standard and optional in manufacturers' publications. The standard devices will vary with different types of transformers. Some of the optional devices that offer protective features include the following:

a) Winding temperature equipment in addition to the standard top-oil temperature indicator. This device is calibrated for use with specific transformers and automatically takes into account the hottest spot temperature of the windings, ambient temperature, and load cycling. For this reason, it provides a more accurate, continuous, and automatic measure of the transformer loading and overloading capacity. It may have contacts that can be set to alarm and even subsequently trip a circuit breaker or fusible disconnect equipped with shunt trip capabilities. For all dry-type transformers, similar winding temperature protective devices employing detectors embedded in the windings are available.
b) The pressure relay for sensitive high-speed indication of liquid-immersed transformer internal faults. Since the device is designed to operate on the rate of change of internal pressure, it is sensitive only to that resulting from internal faults and not to pressure changes due to temperature and loading.
c) Alarm contacts such as temperature indicators, liquid-level and pressure vacuum gauges, and pressure-relief activator and alarm devices, can be included on the standard devices for more effective utilization.
d) Surge arresters mounted directly on the transformer tank provide maximum surge protection for the transformer. The type of arrester specified and its voltage rating should be coordinated with the voltage parameters of the system on which it is applied and the BIL of the transformer. Refer to Chapter 6 for a detailed discussion of surge arrester application.

10.4.9 Termination facilities

Termination facilities are available to accommodate most types of installation. For the unit substation arrangement, indoors or outdoors, the incoming and outgoing bushings are usually

Copyright The Institute of Electrical and Electronics Engineers, Inc.
Provided by IHS under license with IEEE
No reproduction or networking permitted without license from IHS Not for Resale

side-wall-mounted and enclosed in a throat or transition section for connection to adjacent switchgear assemblies. Tank-wall-mounted enclosures, oil- or air-insulated, with or without potheads or cable clamps, are available for direct cable termination. The size and number of conductors should be specified, along with minimum space for stress cone termination, if required. For the station-type transformers in an outdoor installation, cover-mounted bushings provide the simplest facility for overhead lines.

10.4.10 Sound levels

The transformer sound level is of importance in certain installations. The maximum standard levels are listed in NEMA TR 1-1980 [B47]. These can be reduced to some extent by special design. The transformer manufacturer should be consulted regarding the possible reduction for a particular type and rating.

10.5 Unit substations

10.5.1 General discussion

A unit substation consists of the following sections:

a) A primary section that provides for the connection of one or more incoming high-voltage circuits, each of which may or may not be provided with a switching device or a switching and interrupting device.
b) A transformer section that includes one or more transformers with or without automatic load-tap-changing equipment. The use of automatic load-tap-changing equipment is not common in unit substations.
c) A secondary section that provides for the connection of one or more secondary feeders, each of which is provided with a switching and interrupting device.

10.5.2 Types

Unit substation sections are normally subassemblies for connection in the field and are usually one of the following types (the application of these to industrial power systems is described in Chapter 2).

a) *Radial*. One primary feeder to a single stepdown transformer with a secondary section for the connection of one or more outgoing radial feeders (see Chapter 2).
b) *Primary-selective and primary-loop*. Each step-down transformer connected to two separate primary sources through switching equipment to provide a normal and alternate source. Upon failure of the normal source, the transformer is switched to the alternate source (see Chapter 2).
c) *Secondary-selective*. Two step-down transformers, each connected to a separate primary source. The secondary of each transformer is connected to a separate bus through a suitable switching and protective device. The two sections of bus are connected by a normally open switching and protective device. Each bus has provisions for one or more secondary radial feeders (see Chapter 2).

Copyright The Institute of Electrical and Electronics Engineers, Inc.
Provided by IHS under license with IEEE
No reproduction or networking permitted without license from IHS Not for Resale

d) *Secondary-spot network*. Two step-down transformers, each connected to a separate primary source. The secondary side of each transformer is connected to a separate bus through a special type of circuit breaker called a network protector, which is equipped with relays to trip the circuit breaker on reverse power flow to the transformer and reclose the circuit breaker upon restoration of the correct voltage, phase angle, and phase sequence at the transformer secondary. The bus has provisions for one or more secondary radial feeders (see Chapter 2). The primary is equipped with a vacuum circuit protector and a three-position switch: ON-OFF-GROUND.

10.5.3 Selection and location

Considerations in the selection and location of unit substations are apparent power and voltage ratings, allowance for future growth, appearance, atmospheric conditions, and outdoor versus indoor location.

10.5.4 Advantages of unit substations

The engineering of the components is coordinated by the manufacturer, the costs of field labor and installation time are reduced, and the substation appearance is improved. The operating costs are reduced due to the reduced power losses from shorter secondary feeders, and a power system using unit substations is flexible and easy to expand.

Unit substations are available for either indoor or outdoor location. In some applications, the heat-producing transformer is located outdoors and connected by a metal-enclosed busway to indoor switchgear.

Primary unit substations may be located outdoors, particularly when the primary supply is above 34.5 kV. The high-voltage equipment, including the design, all components, the supporting structures, and installation drawings, may be obtained as a package. There is a trend toward metal-enclosed equipment above 34.5 kV in a unit substation arrangement because of the increasing requirements for safety, compactness, appearance, and reduction of installation labor and time.

Most secondary unit substations are located indoors to reduce costs and improve voltage reduction by placing the transformer as close as possible to the center of the load in the area being supplied.

10.5.5 Application guides

a) The transformer secondary main circuit breaker or fused switch and connections should have a continuous-current rating that is approximately 25% greater than the continuous-current rating of the transformer. This is necessary since transformers are often required to carry short-time overloads above their nameplate ratings for a short time, such as during plant start-up. When selecting the continuous-current rating of the transformer secondary main circuit breaker, or fused switch and connections, consideration should also be given to whether or not the transformer has, or will have

--`,,`,,`-`-`,,`,,`,`,,`---

Copyright The Institute of Electrical and Electronics Engineers, Inc.
Provided by IHS under license with IEEE
No reproduction or networking permitted without license from IHS Not for Resale

in the future, a continuous forced-air-cooled rating, dual winding temperature rating, or other extension of the rating.

b) The effects of solar self-cooled radiation and atmospheric conditions should be considered in the selection of outdoor equipment. IEEE Std C37.24-1986 [B29] gives guidance for evaluating the effect of solar radiation. The lighter the color of the exterior paint, the lower the effect of solar radiation on the equipment.

c) When connected to circuits that are subject to lightning or switching surges, substations should be equipped with surge-protective equipment, which is selected to limit voltage surges to values below the BIL of the transformers and the switching equipment.

10.6 Motor control equipment

10.6.1 General discussion

The majority of motors utilized by industrial firms are integral horsepower induction motors of squirrel-cage design supplied from distribution systems of three-phase 600 Vac and below. The choice of an integral horsepower controller depends on a number of factors:

a) *Power system.* Does it use dc or ac; is it single-phase or three-phase? What is the voltage and frequency? Will the system permit large inrush currents during full-voltage starting without excessive voltage drop?

b) *Motor.* Is the controller to be used with dc, squirrel-cage induction, wound-rotor induction, synchronous motor, or adjustable frequency drives? What is the horsepower? Will the motor be jogged or reversed frequently? What is the acceleration time from start to full speed? Will the motor design specify reduced current inrush?

c) *Load*. Is the load geared, belt-driven, or direct-coupled? Loaded or unloaded start?

d) *Operation*. Is operation to be manual or automatic?

e) *Protection*. Are fuses or circuit protectors to be used for short-circuit protection? To size the elements of motor overload relays, the full-load current of the motor, the ambient temperature at the motor, controller, and the service factor of the motor should be known.

f) *Environment*. Will the motor and controller be subjected to excessive vibration, dirt, dust, oil, or water? Will either be located in a hazardous or corrosive area?

g) *Cable connections and space*. Will there be the required space for cable entrance, bending radius, terminations, and for reliable connections to line and load buses? Will capacitors be installed at the motor terminal box for power factor correction? Will surge-protective equipment, surge arresters, and capacitors, be installed at the motor terminal box? Will current transformers for motor differential protection be installed at the motor terminal box?

To answer these questions for proper application of motor controllers, the specifying engineer should seek the assistance of the application engineers from the utility and manufacturers. In addition, process engineers and operating personnel associated with the installation should be consulted.

Copyright The Institute of Electrical and Electronics Engineers, Inc.
Provided by IHS under license with IEEE
No reproduction or networking permitted without license from IHS Not for Resale

10.6.2 Starters over 600 V

Starters for motors from 2300–13 200 V are designed as integrated complete units based on maximum horsepower ratings for use with squirrel-cage, wound-rotor, synchronous, and multispeed motors for full- or reduced-voltage starting. Alternating current magnetic-fused-type starters, NEMA class E2 (see NEMA ICS 2-1988 [B45], employ current-limiting power fuses and contactors. Each starter will be completely self-contained and prewired, with all components in place. Air-break contactors will be current-rated based on motor horsepower requirements. Combination starters will provide an interrupting fault capacity of 260 MVA symmetrical on a 2300 V system, and 520 MVA symmetrical on a 4160 or 4800 V system. This starter will conform to NEMA ICS 2-1988, class E2 controllers, and applicable IEEE and ANSI standards. There is also a UL listing standard on this equipment. Combinations of motor controllers and switchgear are available as assemblies. Starters are available with air-break contactors or vacuum contactors.

10.6.3 Starters 600 V and below

NEMA ICS 2-1988 [B45] summarizes the NEMA standard for magnetic controller ratings of 115 through 575 V. In ac motor starters, contactors are generally used for controlling the circuit to the motor. Starters should be carefully applied on circuits and in combination with associated short-circuit protective devices (circuit breakers, motor circuit protectors, or fusible disconnects) that will limit the available fault current and the let-through energy to a level the starter can safely withstand. These withstand ratings should be in accordance with ANSI/UL 508-1988 [B17], NEMA ICS 1-1988 [B44], and NEMA ICS 2-1988 [B45], which cover industrial controls, systems, and devices. Some of the common motor-starting devices of 600 V and below that are used in industry are presented in the following subclauses.

10.6.3.1 Across-the-line starter

a) *Manual*. Provides overload protection, but not undervoltage protection. One- or two-pole single-phase for motor ratings to 3 hp. Single- or polyphase-motor-control for motor ratings up to 5 hp at 230 V single-phase, 7½ hp at 230 V three-phase, and 10 hp at 460 V three-phase. Operating control available in toggle, rocker, or push-button design.

b) *Magnetic, nonreversing*. For full-voltage frequent starting of ac motors, suitable for remote control with push-button station, control switch, or with automatic pilot devices. Undervoltage protection is obtained by using momentary contact-starting push-button in parallel with interlock contact in starter and series-connected stop push button. Available in single-phase construction up to 15 hp at 230 V, and three-phase ratings up to 1600 hp at 460 V.

c) *Magnetic, reversing*. For full-voltage starting of single-phase and polyphase motors where application requires frequent starting and reversing, or plugging operation. It consists of two contactors wired to provide phase reversal, mechanically and electrically interlocked to prevent both contactors from being closed at the same time.

Copyright The Institute of Electrical and Electronics Engineers, Inc.
Provided by IHS under license with IEEE
No reproduction or networking permitted without license from IHS Not for Resale

10.6.3.2 Combination across-the-line starter

a) *Magnetic, nonreversing*. For full-voltage starting of polyphase motors. It provides motor overcurrent protection with thermal overload relays. Available with an unfused disconnect; provides short-circuit protection when specified with a fusible disconnect or circuit breaker. The available fault current must be considered before deciding which fuses or circuit breakers will be used. The magnetic contactor provides a level of undervoltage protection and is suitable for remote control.

b) *Magnetic, reversing*. Same as reversing starter, except equipped with nonfusible disconnect, fusible disconnect, or circuit breaker.

10.6.3.3 Reduced voltage starter

a) *Autotransformer, manual*. For limiting starting current and torque on polyphase induction motors to comply with power supply regulations or to avoid excessive shock to the driven machine, or to limit excessive voltage drop. Overload and undervoltage protection are provided. Equipped with mechanical interlock to assure proper starting sequence. Taps are provided on the autotransformer for adjusting starting torque and current. Since the autotransformer controller reduces the voltage by transformation, the starting torque of the motor will vary almost directly as does the line current, even though the motor current is reduced directly with the voltage impressed on the motor.

b) *Autotransformers, magnetic*. Same as manual, but suitable for remote control. It has a timing relay for adjustment of time at which full voltage is applied.

   To overcome the objection of the open-circuit transition associated with an auto transformer starter, a circuit known as the Korndorfer connection is in common use. This type of starter requires a two-pole and a three-pole start contactor. The two-pole contactor opens first on the transition from start to run, opening the connections to the neutral of the autotransformer. The windings of the transformer are then momentarily used as series reactors during the transfer, allowing a closed-circuit transition. Although it is somewhat more complicated, this type of starter is frequently used on high-inertia centrifugal compressors to obtain the advantages of low line-current surges and closed-circuit transition.

c) *Primary resistor or reactor type*. Automatic reduced voltage starter designed for geared or belted drive where sudden application of full-voltage torque must be avoided. Inrush current is limited by the value of the resistor or reactor; starting torque is a function of the square of the applied voltage. Therefore, if the initial voltage is reduced to 50%, the starting torque of the motor will be 25% of its full-voltage starting torque. A compromise must be made between the required starting torque and the inrush current allowed on the system. It provides both overload and undervoltage protection and is suitable for remote control. The resistor or reactor is shorted out as speed approaches rated rpm.

d) *Part winding type*. Used on light or low-inertia loads where the power system requires limitations on the increments of current inrush. It consists of two magnetic starters, each selected for one of the two motor windings, and a time-delay relay con-

Copyright The Institute of Electrical and Electronics Engineers, Inc.
Provided by IHS under license with IEEE
No reproduction or networking permitted without license from IHS Not for Resale

trolling the time at which the second winding is energized. It provides overload and undervoltage protection and is suitable for remote control.

e) *Wye-delta type (also known as star-delta).* This type of starter is most applicable to starting motors that drive high-inertia loads with resulting long acceleration times. When the motor has accelerated on the wye (or star) connection, it is automatically reconnected by contactors for normal delta operation. This type of starter requires 6 motor leads.

In selecting the type of reduced-voltage starter, consideration should be given to the motor control transition from starting to running. In a closed-circuit transition, power to the motor is not interrupted during the starting sequence, whereas on open-circuit transition it is interrupted. Closed-circuit transition is recommended for all applications to minimize inrush voltage disturbances.

A comparison of starting currents and torques produced by various kinds of reduced-voltage starters is shown in table 10-17.

10.6.3.4 Slip-ring motor controller

The wound-rotor or slip-ring motor functions in the same manner as the squirrel-cage motor, except that the rotor windings are connected through slip rings and brushes to external circuits with resistance to vary motor speed. Increasing the resistance in the rotor circuit reduces motor speed and decreasing the resistance increases motor speed. Some variation of this type controller employs thyristors in place of contactors and resistors. Some even rectify the secondary current and invert it to line frequency to supply back into the input, raising the efficiency appreciably.

10.6.3.5 Multispeed controller

These controllers are designed for the automatic control of two-, three-, or four-speed squirrel-cage motors of either the consequent-pole or separate-winding types. They are available for constant-horsepower, constant-torque, or variable-torque three-phase motors used on fans, blowers, refrigeration compressors, and similar machinery.

10.6.3.6 Solid-state reduced-voltage motor starter

a) *Introduction.* Solid-state motor starters can control the starting cycle and provide reduced voltage starting for standard ac squirrel-cage motors. Solid-state control electronics combined with power thyristors ensure long life, low maintenance, and eliminate burnout of parts, such as power contacts and ac coils associated with electromechanical starters. They provide an adjustable, controlled acceleration and eliminate high power demands during starting. In some applications, other types of power semiconductors can be utilized. These starters are available in standard models for motors rated from fractional horsepower to 1000 hp.

b) *Principle of a solid-state motor starter.* One type of reduced-voltage motor starter uses six thyristors in a full-wave configuration to vary the input voltage from zero to full on, so that the motor accelerates smoothly from zero to full running speed. The

--`,,`,,`-`-`,,`,,`,`,,`---

Copyright The Institute of Electrical and Electronics Engineers, Inc.
Provided by IHS under license with IEEE
No reproduction or networking permitted without license from IHS Not for Resale

Table 10-17—Comparison of different reduced voltage starters

	Autotransformer*			Primary resistor or reactor		Part winding†		
	50% Tap	65% Tap	80% Tap	65% Tap	80% Tap	2-step	3-step	Wye delta
Starting current drawn from line as percentage of that which would be drawn upon full-voltage starting‡	28%	45%	67%	65%	80%	60%‡	25%	33 1/3%
Starting torque developed as percentage of that which would be developed on full-voltage starting	25%	42%	64%	42%	64%	50%	12 1/2%	33 1/3%
	Increases slightly with speed			Increases greatly with speed				
Smoothness of acceleration	Second in order of smoothness			Smoothness of reduced-voltage types. As motor gains speed, current decreases. Voltage drop across resistor decreases and motor terminal voltage increases.		Fourth in order of smoothness		Third in order of smoothness
Starting current and torque adjustment	Adjustable within limits of various taps			Adjustable within limits of various taps				Fixed

*Closed transition.
†Approximate values only. Exact values can be obtained from motor manufacturer.
‡Full-voltage start usually draws between 500 and 600% of full-load current.

thyristors are activated by an electronic control section that has an initial step voltage adjustment. This adjustment, combined with a ramped voltage and current-limit override, provides constant current (torque) to the motor until it reaches full speed.

Variations in the design of starting circuit are as follows:

a) Three power diodes replace the three return conducting thyristors. The control circuit is simple and each thyristor is protected against reverse voltage by its associated diode. This half-wave configuration could produce harmonics that generate added heat in the motor windings. Thermal protective devices should be properly sized to prevent this additional heat from damaging the motor.
b) Thyristors are used only during the starting phase. At full voltage, a run contactor closes and the circuit operates as a conventional electromechanical starter.

Copyright The Institute of Electrical and Electronics Engineers, Inc.
Provided by IHS under license with IEEE
No reproduction or networking permitted without license from IHS
Not for Resale

c) A starter with linear-timed acceleration uses a closed-loop feedback system to maintain the motor acceleration at a constant rate. The required feedback signal is provided by a dc tachometer coupled to the motor.
d) Starter performance comparison: The solid-state reduced-voltage motor starter maintains a constant level of kilovoltamperes and reduces sudden torque surges to the motor. The current limiter, in conjunction with the acceleration ramp, holds the current constant at a preset level during the start-up period. When the start cycle is complete, the motor is running at almost full voltage with, essentially, a pure sine wave in each phase.

10.6.3.7 Controller for dc motors

These motors have favorable speed-torque characteristics, and their speed is easily controlled. Reduced voltage starting is accomplished by inserting a resistance in series with the armature winding. As counter electromagnetic force builds up in the armature, the external starting resistance can be gradually reduced and then removed as the motor comes up to speed. Speed control of dc motors can be accomplished by varying resistance in the shunt or series fields or in the armature circuit.

10.6.4 Motor control center

Most centers are tailor-made assemblies of conveniently grouped control equipment primarily used for power distribution and associated control of motors. They contain all necessary buses, incoming line facilities, and safety features to afford the maximum in convenience by saving space and labor and by providing adaptability to ever-changing conditions with a minimum of effort and a maximum of safety. NEMA ICS 2-1988 [B45] governs the type of enclosure and wiring; NEMA Type 1, 2, rH, and 12 enclosures are generally available. Wiring of motor-control centers conforms to two NEMA classes and three types. Class I provides for no wiring by the manufacturer between compartments of the center. Class II requires prewiring by the manufacturer with interlocking and other control wiring completed between compartments of the center. With Type A, no terminal blocks are provided; with Type B, all connections within individual compartments are made to terminal blocks; and with Type C, all connections are made to a master terminal block located in the horizontal wiring trough at the top or bottom of the center. The ideal wiring specification for minimum field installation time and labor is NEMA Class II, Type C wiring. The wiring specification most frequently used by industrial contractors is Class I, Type B wiring. Refer to NEMA ICS 2-1988 for definitions of wiring classes and types.

NEMA ICS 2-1988 [B45] specifies that a control center shall carry a short-circuit rating defined as the maximum available rms symmetrical current in amperes permissible at line terminals. The available short-circuit current at the line terminals of the motor-control center is computed as the sum of maximum available current of the system at the point of connection and the short-circuit current contribution of the motors connected to the control center. It is common practice by many manufacturers to show only the short-circuit rating of the buswork on the nameplate. As a result, it is very important to establish the actual rating of the entire unit and, in particular, the plug-in units (that is, circuit breakers, fusible disconnects, starters, etc.), especially for applications where available fault currents exceed 10 000 A.

Copyright The Institute of Electrical and Electronics Engineers, Inc.
Provided by IHS under license with IEEE
No reproduction or networking permitted without license from IHS Not for Resale

Also, the short-circuit withstand duration of a motor control center is a consideration, depending on the short-circuit operating time of the line-side interrupting device.

10.6.5 Control circuits

Conventional starters of 600 V and below are factory-wired with coils of the lower voltage rating than the phase voltage to the motor. In such cases, control transformers are used to step the voltage down to permit the use of lower voltage coil circuits. Control transformers can be supplied by manufacturers as separate units with provisions for mounting external to the controller, or they can be incorporated in the controller enclosure and wired in with an operating coil of proper voltage rating. Such transformers can be obtained with primary and secondary fused or other approved means to meet code requirements on control-circuit overcurrent protection. Internally protected control-circuit transformers are available at a rating of less than 50 VA. These do no require primary fuses but have a secondary fuse. Selection of the proper control transformer for a controller is a simple matter of matching the characteristics of the control circuit to the specifications of the transformer. The line voltage of the supply to the motor determines the required primary rating of the transformer. The secondary must be rated to provide the desired control-circuit voltage to match the voltage of the contactor operating coil. The continuous secondary current rating of the transformer should be sufficient for the magnetizing current of the operating coil and should also be able to handle the inrush current. In addition, the control transformer should be of sufficient capacity to supply power requirements of control devices associated with the particular control circuit, that is, indicating lamps, relays, timers, etc.

Two forms of control, undervoltage release and undervoltage protection, can be provided in the motor starters. In the first, if the voltage drops below a set minimum, or if the control-circuit voltage fails, the contactor will drop out but will reclose as soon as the voltage is restored. With undervoltage protection, low voltage or failure of the control-circuit voltage will cause the contactor to drop out, but the contactor will not reclose upon restoration of voltage. On some occasions it may be desirable to measure the duration of the voltage dip, and unless the undervoltage lasts more than some predetermined time, the motor is not disconnected. This feature is called time-delay undervoltage protection.

10.6.6 Overload protection

Motor starters are equipped with overload relays. These relays have a time-current characteristic to allow for starting inrush current or momentary overloads. The relays may be thermal or electronic. Some existing outdated starters may have magnetic overload relays. In the case of magnetic relays a dashpot is used to provide the time delay. For thermal relays, the time–current characteristic is derived from the response of components of the relay to heat generated by a thermal element that simulates the heating of the motor windings due to line current.

Electronic overload relays sense motor currents, transform them into logic level signals, and process these signals to simulate motor thermal (I^2t) models. Some of these relays offer field selectability for overload class, and communication capabilities for centralized computer

Copyright The Institute of Electrical and Electronics Engineers, Inc.
Provided by IHS under license with IEEE
No reproduction or networking permitted without license from IHS Not for Resale

control. Electronic overload relays permit field adjustment of overload settings, thereby eliminating the need for individual heater elements calibrated to specific motor currents.

Electronic overload relays for larger motors (2300 V and above) are available with many standard and optional motor-protective functions in a singular modular unit, which permit precise protection of motors and allow motors to be utilized very close to their ratings. Protective functions generally available in these electronic relays are motor-timed overload protection, instantaneous overcurrent protection, stator winding overtemperature protection based on resistance temperature detectors (RTDs) embedded in stator windings, motor bearing overtemperature protection based on RTDs placed at motor bearings, load bearing overtemperature protection based on RTDs at load bearings, underload protection, phase reversal protection, and incomplete sequence protection.

NEMA ICS 2-1988 [B45] divides overload relays into classes: Classes 30, 20, and 10. The class is defined by the maximum time, in seconds, in which the relay must function on six times its ultimate trip current. (Ultimate trip current is 1.25 times the full-load current for motors having a service factor of 1.15, and 1.15 times the full-load current for motors having a service factor of 1.0).

The types of overload relays to be used on a particular application depend on required reliability, type of load, ambient conditions, motor type and size, safety factors, acceleration time, and probability of an overload.

Recommended motor protection guidelines are given in Chapter 9 of IEEE Std 242-1986 [B40].

10.6.7 Solid-state control

Solid-state controls are frequently applied with variable-speed systems, such as pump motor drives. Most solid-state systems consist of these basic sections: the sensor, the programmer, and the adjustable-speed unit.

a) The sensor generates an electric signal proportional to the changing system conditions (pressure, flow, etc.). This dc signal is applied to the programmer.

b) The programmer determines the automatic starting and stopping sequence of each motor and sets the speed range of each adjustable-speed drive. One type of solid-state programmer consists of plug-in, printed-circuit cards and a motherboard. The input signal is applied to the plug-in cards through printed circuits on the motherboard. The card functions are power supply, speed-programming control, sequencing control, and metering.

c) The adjustable-speed unit controls the electric energy to an ac motor to change speed by means of a frequency-control system, a voltage-control system, or an impedance-control system. This unit contains the thyristors (silicon-controlled rectifiers) that provide the power control function to change motor speed.

--`,,`,,`-`-`,,`,,`,`,,`---

Copyright The Institute of Electrical and Electronics Engineers, Inc.
Provided by IHS under license with IEEE
No reproduction or networking permitted without license from IHS Not for Resale

10.7 Adjustable speed drives

The continuing advancement of semiconductor devices is enhancing the design and application of solid-state drives for dc and ac motors' speed controls. Semiconductor devices like diodes, thyristors, transistors, and gate-turn-off switches (GTOs) are available with high current-carrying capacity. The control systems aided by microprocessors and digital electronics offer reliable and highly accurate speed control. The cost and performance advantages of these drives compared to that of earlier drives like a motor generator (MG) set for dc and eddy current for ac is significant.

10.7.1 DC drives

In industrial drives, dc motors have been the prime choice for speed control based on their adaptability to wide ranges of speed-serving duties of small to several thousand horsepower mechanical demands. A dc motor's speed can be changed by varying the armature voltage or field current.

10.7.1.1 Constant torque

Armature voltage-controlled dc drives are constant-torque drives. Between zero and rated speed, the current is constant at rated value with a constant voltage.

10.7.1.2 Constant horsepower

Field voltage-controlled devices are constant horsepower type required for a specified speed range.

10.7.1.3 Variable torque

Armature current is a function of motor load. To maintain the limit to rated current, the motor load decreases resulting in decrease of torque above the base speed.

The trend of the application of dc drives had been declining due to the commutators' high expense and maintenance requirements. Those problems are being overcome, however, with the introduction of new brushless technology.

10.7.2 AC drives

In industry the choice of ac drives over dc drives for speed control is getting favorable attention.

10.7.2.1 AC motors

The following features make squirrel-cage induction motors widely acceptable in industry:

a) Simplified design with high reliability
b) Rugged construction for suitability of all environments

--`,,`,,`-`-`,,`,,`,`,,`---

Copyright The Institute of Electrical and Electronics Engineers, Inc.
Provided by IHS under license with IEEE
No reproduction or networking permitted without license from IHS Not for Resale

c) Low initial cost
d) Low operating cost
e) Low maintenance cost
f) High efficiency

10.7.2.2 AC motor operation's fundamental equation

For any mechanical output of a motor, the two basic parameters to be controlled are speed and torque. The fundamental equations defining operating parameters of ac motors are the following:

$$N_s = \frac{120f}{p}$$

$$\%\ \text{slip} = \frac{(N_s - \text{FL speed})}{N_s} \cdot 100\%$$

N_s is the synchronous speed units
f is the motor frequency units
p is the number of poles
FL speed is the full-load speed (r/min28)

10.7.2.2.1 Speed control

The speed of an ac motor can be controlled by changing either of the following parameters:

a) *The pole pairs*. The pole-changing method gives a stepped control of speed. In general, pole-changing is done for two-speed motors utilizing combination motor starters.
b) *The supply frequency.* Varying the supply frequency gives a stepless or smooth variation of speed, which can be easily achieved.
c) *Slip control*. The principle of speed control by "slip" is applied by stator voltage controls, slip power recovering, and rotor resistance control. However, torque and speed control cannot be performed independently with this method.

10.7.2.2.2 Torque control

The motor's torque is proportional to the magnetic flux density of the air gap between a motor's rotor and stator.

a) *Constant torque*. The flux density must be maintained constant over the operating frequency range to keep the torque constant. On the other hand, the impedance of the motor varies directly with the supply frequency. Increase in supply frequency increases the motor impedance. In this event, the supply voltage should be increased to maintain the air gap voltage constant to create constant flux density. Therefore, a

Copyright The Institute of Electrical and Electronics Engineers, Inc.
Provided by IHS under license with IEEE
No reproduction or networking permitted without license from IHS Not for Resale

constant flux density is dependent on a constant volt to frequency ratio, *V/f*. The ratio, *V/f*, is controlled by convertors. At low-speed or low-frequency range, the effect of resistance in comparison to the effect of reactance (termed *IR compensation*) is significant enough to raise the supply voltage above the V/f requirement in order to maintain the air-gap-flux constant.

b) *Constant horsepower.* Above the rated value of speed, the rated voltage remains the same as the supply voltage. The air-gap flux decreases inversely to the frequency, and the torque decreases inversely to the square of the frequency at nearly constant "slip." This is the constant horsepower range of speed control.

10.7.2.2.3 Types of ac drives

The major categories of ac drives in use in industry are as follows:

a) *Voltage source inverter (VSI).* The design of VSI utilizes thyristors in the converter section and thyristors, GTOs, and transistors in the inverter section. The output voltage is controlled as six-step and is pulse-width modulated (PWM).

b) *Current source inverters (CSI).* The design of CSI is based on controlling motor current for the voltage frequency requirement. In the case of circuit design, the inductance of the motor plays a major part. This design can accommodate the motor to be driven at higher than the rated horsepower.

Microprocessor control of ac drives, which is routinely available, is causing ac drives to replace dc drives. The microprocessor's application for vector control of characteristics of ac motor torque and magnetizing components is one of the predominant features that supports the application of ac drives over dc drives.

10.7.3 Specification

Based on the functional description of mechanical and process requirements, the following criteria should be analyzed and addressed in the specification of the drives:

a) Speed torque curve of the mechanical load
b) Speed range and regulation
c) Break-away torque
d) Dynamic response (Wk^2) to the motor shaft, including acceleration and deceleration time
e) For large motors with high-speed operation, mechanical resonance effect of gears, couplings, and flywheels
f) Motor voltage
g) Voltage dips and deviations
h) Frequency deviation
i) Incoming power, voltage dips, and regulation
j) Ride-through requirements and response to momentary interruption
k) Harmonic current and its effect on a plant's power distribution apparatus, especially to microprocessor-based equipment and electronically sensitive instruments
l) Harmonic current's effect on mechanical output, such as torque and pulsation

Copyright The Institute of Electrical and Electronics Engineers, Inc.
Provided by IHS under license with IEEE
No reproduction or networking permitted without license from IHS Not for Resale

m) Environment requirement of the drive and its effect on the performance (ambient temperature, hazardous, non-hazardous classified area, climate-controlled room or enclosure)
n) Diagnostics and alarms requirement
o) Hardware requirement like control console, video displays, etc.
p) Interface to other control equipment like Programmable Logic Controller (PLC), Distributed Control System (DCS), and hard-wired operator stations
q) Serial/parallel-type computer interfaces for supervisory control and recipe downloading
r) Starting and stopping cycles for energy-management applications
s) Regeneration applications

10.8 Bibliography

[B1] ANSI C37.06-1987, American National Standard Preferred Ratings and Related Required Capabilities for AC High-Voltage Circuit Breakers Rated on a Symmetrical Current Basis.

[B2] ANSI C37.16-1988, American National Standard Preferred Ratings, Related Requirements, and Application Recommendations for Low-Voltage Power Circuit Breakers and AC Power Circuit Protectors.

[B3] ANSI C57.12.10-1988, American National Standard Requirements for Transformers—230 kV and Below, 833/958 through 8333/10 417 kVA, Single-Phase, and 750/862 through 60 000/80 000/100 000 kVA, Three-Phase.

[B4] ANSI C57.12.13-1982, American National Conformance Standard for Liquid-Filled Transformers Used in Unit Installation, Including Unit Substations.

[B5] ANSI C57.12.20-1981, American National Standard for Overhead-Type Distribution Transformers, 500 kVA and Smaller: High Voltage, 34 500 Volts and Below; Low Voltage, 7970/13 800Y Volts and Below.

[B6] ANSI C57.12.21-1980, American National Standard Requirements for Pad-Mounted, Compartmental-Type, Self-Cooled, Single-Phase, Distribution Transformers with High-Voltage Bushings (High-Voltage, 34 500 Grd Y/19 920 Volts and Below; Low-Voltage, 240/120; 167 kVA and Smaller).

[B7] ANSI C57.12.22-1989, American National Standard Requirements for Pad-Mounted, Compartmental-Type, Self-Cooled, Three-Phase, Distribution Transformers with High-Voltage Bushings, 2500 kVA and Smaller: High-Voltage, 34 500 Grd Y/19 920 Volts and Below; Low-Voltage, 480 Volts and Below.

[B8] ANSI C57.12.23-1992, American National Standard Requirements for Underground-Type, Self-Cooled, Single-Phase Distribution Transformers, with Separable Insulated

Copyright The Institute of Electrical and Electronics Engineers, Inc.
Provided by IHS under license with IEEE
No reproduction or networking permitted without license from IHS Not for Resale

High-Voltage Connectors, High Voltage 24 940 Grd Y/14 400 Volts and Below, Low-Voltage 240/120, 167 kVA and Smaller.

[B9] ANSI C57.12.24-1982, American National Standard Requirements for Underground-Type, Three-Phase, Distribution Transformers, 2500 kVA and Smaller: High Voltage 34 500 Grd Y/19 920 Volts and Below; Low Voltage 480 Volts and Below.

[B10] ANSI C57.12.25-1988, American National Standard Requirements for Pad-Mounted, Compartmental-Type, Self-Cooled, Single-Phase, Distribution Transformers with Separable Insulated High-Voltage Connectors, High-Voltage, 34 500 Grd Y/19 920 Volts and Below; Low-Voltage, 240/120; 167 kVA and Smaller.

[B11] ANSI C57.12.26-1992, American National Standard Requirements for Pad-Mounted, Compartmental-Type, Self-Cooled, Three-Phase Distribution Transformers for Use with Separable Insulated High-Voltage Connectors, High-Voltage, 34 500 Grd Y/19 920 Volts and Below; 2500 kVA and Smaller.

[B12] ANSI C57.12.51-1981 (Reaff 1989), American National Standard Requirements for Ventilated Dry-Type Power Transformers—501 kVA and Larger, Three-Phase, with High-Voltage 601 to 34 500 Volts, Low-Voltage 208Y/120 to 4160 Volts.

[B13] ANSI C57.12.52-1981 (Reaff 1989), American National Standards Requirements for Sealed Dry-Type Power Transformers—501 kVA and Larger, Three-Phase, with High-Voltage 601 to 34 500 Volts, Low-Voltage 208Y/120 to 4160 Volts.

[B14] ANSI C57.12.55-1987, American National Conformance Standard for Dry-Type Transformers in Unit Installations, Including Unit Substations.

[B15] ANSI/NFPA 70-1993, National Electrical Code.

[B16] ANSI/NFPA 110-1993, Emergency and Standby Power Systems.

[B17] ANSI/UL 508-1988, Safety Standard for Industrial Control Equipment.

[B18] IEEE Std C37.010-1979 (Reaff 1988), IEEE Application Guide for AC High-Voltage Circuit Breakers Rated on a Symmetrical Current Basis (ANSI).

[B19] IEEE Std C37.011-1979 (Reaff 1988), IEEE Application Guide for Transient Recovery for AC High-Voltage Circuit Breakers Rated on a Symmetrical Current Basis (ANSI).

[B20] IEEE Std C37.012-1979 (Reaff 1988), IEEE Application Guide for Capacitance Current Switching for AC High-Voltage Circuit Breakers Rated on a Symmetrical Current Basis (ANSI).

[B21] IEEE Std C37.04-1979 (Reaff 1988), IEEE Standard Rating Structure for AC High-Voltage Circuit Breakers Rated on a Symmetrical Current Basis (ANSI).

Copyright The Institute of Electrical and Electronics Engineers, Inc.
Provided by IHS under license with IEEE
No reproduction or networking permitted without license from IHS Not for Resale

[B22] IEEE Std C37.13-1990, IEEE Standard for Low-Voltage AC Power Circuit Breakers Used in Enclosures (ANSI).[2]

[B23] IEEE Std C37.14-1979 (Reaff 1985), IEEE Standard for Low-Voltage DC Power Circuit Breakers Used in Enclosures (ANSI).

[B24] IEEE Std C37.18-1979 (Reaff 1991), IEEE Standard for Field Discharge Circuit Breakers Used in Enclosures for Rotating Electric Machinery (ANSI).

[B25] IEEE Std C37.20-1987, IEEE Standard for Switchgear Assemblies Including Metal-Enclosed Bus.[3]

[B26] IEEE Std C37.20.1-1987 (Reaff 1992), IEEE Standard for Metal-Enclosed Low-Voltage Power Circuit Breaker Switchgear (ANSI).

[B27] IEEE Std C37.20.2-1987 (Reaff 1992), IEEE Standard for Metal-Clad and Station-Type Cubicle Switchgear (ANSI).

[B28] IEEE Std C37.20.3-1987 (Reaff 1992), IEEE Standard for Metal-Enclosed Interrupter Switchgear (ANSI).

[B29] IEEE Std C37.24-1986 (Reaff 1991), IEEE Guide for Evaluating the Effect of Solar Radiation on Outdoor Metal-Enclosed Switchgear (ANSI).

[B30] IEEE Std C37.29-1981 (Reaff 1985), IEEE Standard for Low-Voltage AC Power Circuit Protectors Used in Enclosures (ANSI).

[B31] IEEE Std C37.100-1992, IEEE Standard Definitions for Power Switchgear.

[B32] IEEE Std C57.12.00-1987, IEEE Standard General Requirements for Liquid-Immersed Distribution, Power, and Regulating Transformers (ANSI).

[B33] IEEE Std C57.12.01-1989, IEEE Standard General Requirements for Dry-Type Distribution and Power Transformers, Including Those with Solid Cast and/or Resin-Encapsulated Windings.

[B34] IEEE Std C57.12.90-1987, IEEE Standard Test Code for Liquid-Immersed Distribution, Power, and Regulating Transformers; and Guide for Short-Circuit Testing of Distribution and Power Transformers (ANSI).

[B35] IEEE Std C57.13-1978 (Reaff 1986), IEEE Standard Requirements for Instrument Transformers (ANSI).

---

[2]Tables 10-3 and 10-4 are based on data taken from the 1981 edition of this standard, as noted beneath both tables.

[3]This standard has been withdrawn and is out of print; however, copies can be obtained from the IEEE Standards Department, IEEE Service Center, 445 Hoes Lane, P.O. Box 1331, Piscataway, NJ 08855-1331, USA.

Copyright The Institute of Electrical and Electronics Engineers, Inc.
Provided by IHS under license with IEEE
No reproduction or networking permitted without license from IHS Not for Resale

[B36] IEEE Std C57.92-1981 (Reaff 1991), IEEE Guide for Loading Mineral-Oil-Immersed Power Transformers Up to and Including 100 MVA with 55 °C or 65 °C Winding Rise (ANSI).

[B37] IEEE Std C57.96-1989, IEEE Guide for Loading Dry-Type Distribution and Power Transformers (ANSI).

[B38] IEEE Std C57.102-1974, IEEE Guide for Acceptance and Maintenance of Transformer Askarel in Equipment.[4]

[B39] IEEE Std C57.110-1986, IEEE Recommended Practice for Establishing Transformer Capability for Nonsinusoidal Load Currents (ANSI).

[B40] IEEE Std 242-1986 (Reaff 1991), IEEE Recommended Practice for Protection and Coordination of Industrial and Commercial Power Systems (IEEE Buff Book) (ANSI).

[B41] IEEE Std 446-1987, IEEE Recommended Practice for Emergency and Standby Power Systems for Industrial and Commercial Applications (IEEE Orange Book) (ANSI).

[B42] IEEE Std 739-1984, IEEE Recommended Practice for Energy Conservation and Cost-Effective Planning in Industrial Facilities (IEEE Bronze Book) (ANSI).

[B43] NEMA AB 1-1986, Molded-Case Circuit Breakers and Molded-Case Switches.

[B44] NEMA ICS 1-1988, General Standards for Industrial Control and Systems.

[B45] NEMA ICS 2-1988, Industrial Control Devices, Controllers, and Assemblies.

[B46] NEMA PB 2.1-1991, General Instructions for Proper Handling, Installation, Operation and Maintenance of Deadfront Distribution Switchboards Rated 600 Volts or Less.

[B47] NEMA TR 1-1980, Transformers, Regulators, and Reactors.[5]

[4]This standard has been withdrawn and is out of print; however, copies can be obtained from the IEEE Standards Department, IEEE Service Center, 445 Hoes Lane, P.O. Box 1331, Piscataway, NJ 08855-1331, USA.

[5]Rescinded in 1986.

Copyright The Institute of Electrical and Electronics Engineers, Inc.
Provided by IHS under license with IEEE
No reproduction or networking permitted without license from IHS Not for Resale

Chapter 11
Instruments and meters

11.1 Introduction

This chapter covers instruments and meters used in industrial power distribution systems. (See figures 11-1, 11-2, and 11-3 for examples.) Metering and instrumentation are essential to satisfactory plant operation. Requirements depend on the size and complexity of a plant as well as on economic factors.

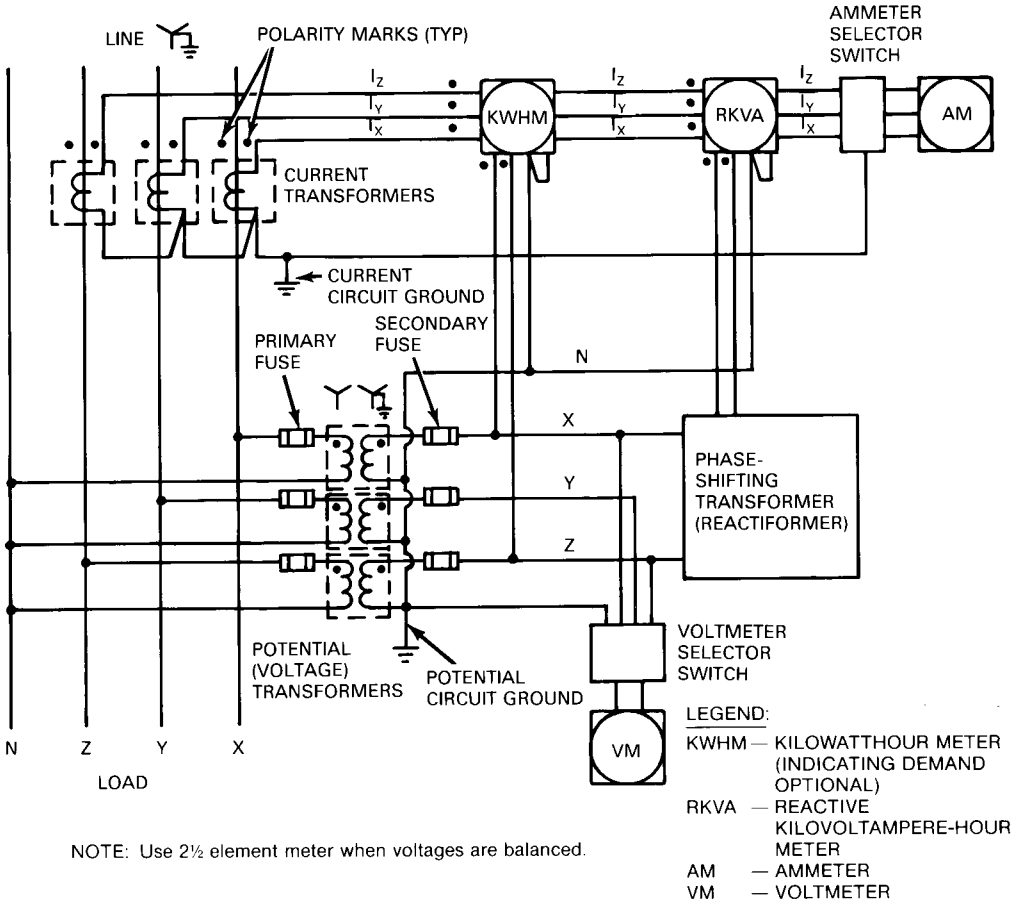

Figure 11-1—Sample metering scheme (3-phase, 4-wire, high current and voltage)

Copyright The Institute of Electrical and Electronics Engineers, Inc.
Provided by IHS under license with IEEE
No reproduction or networking permitted without license from IHS
Not for Resale

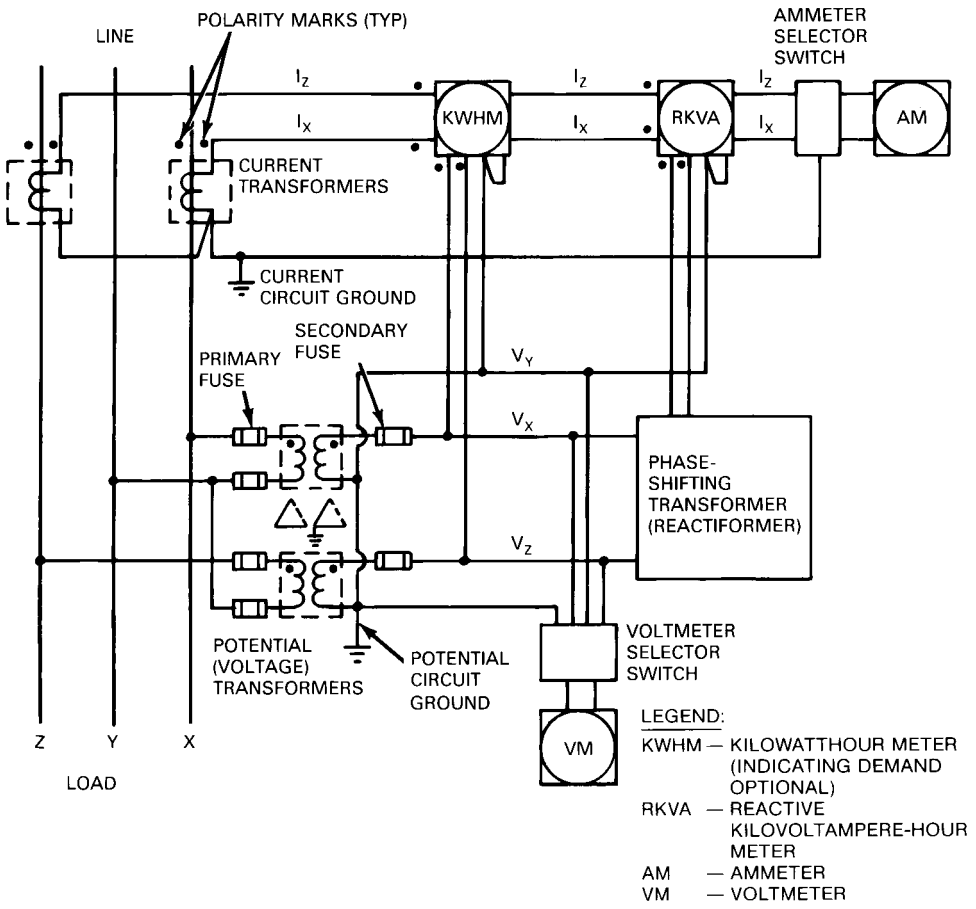

Figure 11-2—Sample metering scheme (3-phase, 3-wire, high current and voltage)

An instrument is defined as a device for measuring the value of a quantity under observation. Instruments may be either indicating or recording types. Recording methods include computer memory, communication to remote computers, and paper charts.

A meter is defined as a device that measures and registers the integral of a quantity over an interval of time. The watthour meter is the most common type of meter. It may use an induction disk or microprocessor with mechanical or electronic demand register. The term *meter* is also commonly used with other words, such as *varmeter*, *voltmeter*, *frequency meter*, even though these devices are technically classified as instruments.

New electronic systems combine instrument and meter functions in packages that are much smaller than individual components for panels. They offer more capabilities and information than users might reasonably install with individual components. They can be programmed

Copyright The Institute of Electrical and Electronics Engineers, Inc.
Provided by IHS under license with IEEE
No reproduction or networking permitted without license from IHS
Not for Resale

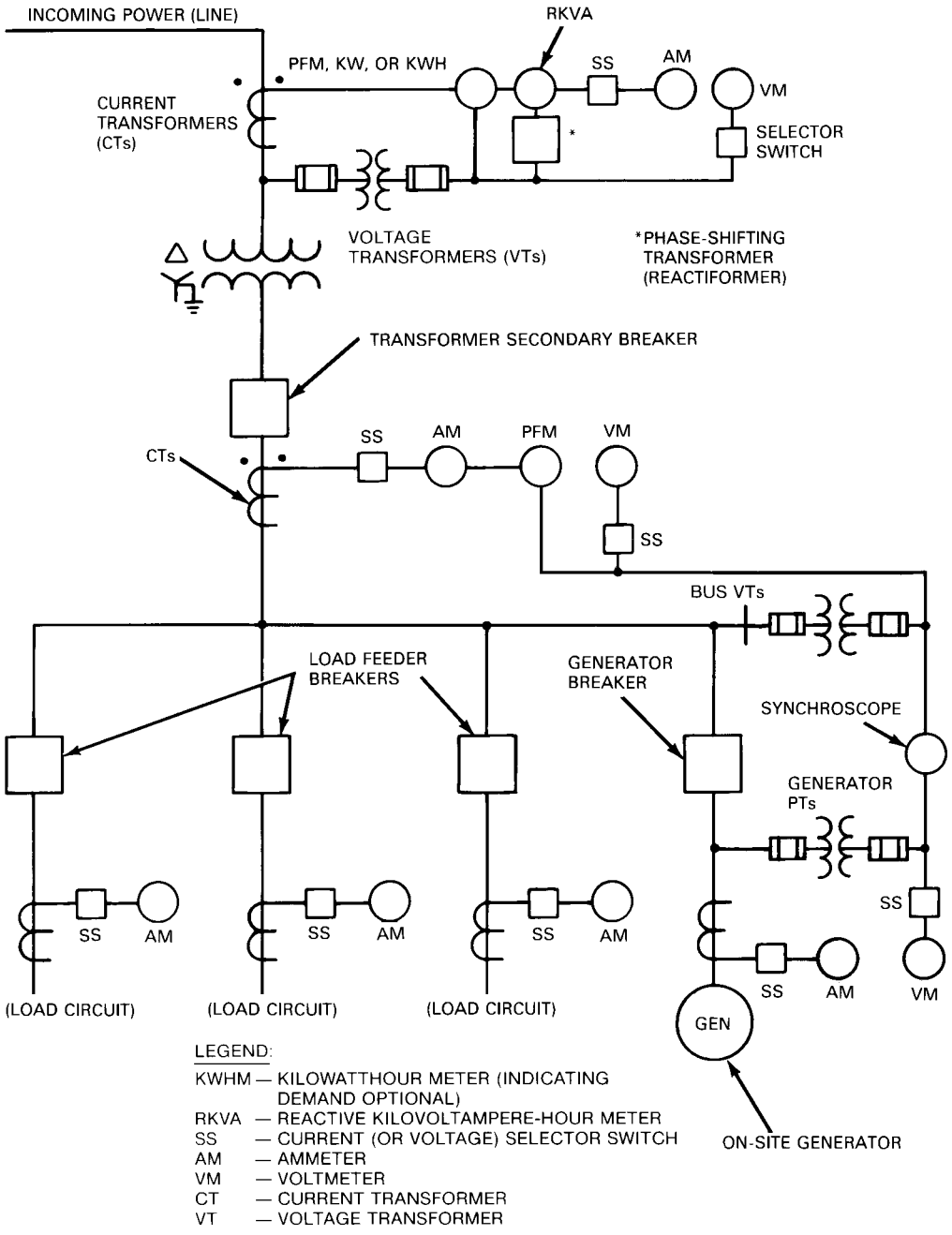

NOTE: No relaying is shown in this figure. If metering VTs and CTs are also used for relay purposes, check connected load (burden).

Figure 11-3—Primary voltage substation sample metering layout

Copyright The Institute of Electrical and Electronics Engineers, Inc.
Provided by IHS under license with IEEE
No reproduction or networking permitted without license from IHS
Not for Resale

with instrument transformer ratios, demand intervals, minimum/maximum logs, and alarm set points. Many devices offer communication ports for integration into industrial plant supervisory systems for detailed monitoring and analysis. Some systems even include circuit protection functions along with the instrument and meter functions. Users should be aware of these devices and consider their use where appropriate.

AC and dc instruments and meters should not be used interchangeably because they are usually constructed differently. In general, dc instruments and meters cannot be used on ac circuits. However, ac instruments and meters, depending on their construction, may be adequate for dc purposes. The manufacturer's instructions or the nameplate should dictate usage.

Instrument and meter users must be aware that many algorithms for converting ac quantities into readings assume a pure ac sine wave. Reading accuracy can vary significantly from the rated accuracy when high harmonic distortion is present, such as capacitor currents and static power converters. For example, a true rms instrument may produce very different readings when compared to an averaging or peak detecting instrument. The accuracy variations can be great enough that the user may reach incorrect conclusions from the readings. Users should be aware of these limitations and select instruments and meters appropriate for the application.

11.2 Basic objectives

Instruments and meters are used in plants for such purposes as operating, monitoring, billing, accounting, planning, assuring safe operations, conserving energy, and maintaining equipment. They provide information relative to the magnitude of an electrical load, energy consumption, load characteristics, load factor, power factor, voltage, etc. The electrical equipment of a plant requires certain performance checks before placing it in service, such as determining whether the voltages are correct, the insulation is in proper condition, connections have been properly made, etc. After the equipment is in service, additional periodic checks are necessary to assure proper equipment operation or to locate problems.

Care should be taken to assure that instruments and meters are compatible to their application to prevent personal injury or damage to the instruments. Care should be taken to assure correct wiring, polarity, phase relationship, tap settings, burden, etc., to ensure accurate readings. All instruments and meters should be checked and recalibrated periodically.

11.3 Switchboard and panel instruments

Switchboard and panel instruments are permanently mounted, and most are single-range devices used in the continuing operation of a plant. The current coils of most instruments are rated 5 A; their potential coils are typically rated 120 V. Whenever the current and voltage of a circuit exceed the rating of the instruments, current and voltage (potential) transformers are required.

Copyright The Institute of Electrical and Electronics Engineers, Inc.
Provided by IHS under license with IEEE
No reproduction or networking permitted without license from IHS Not for Resale

In general, *switchboard instruments* are physically larger, have longer scale lengths, are more tolerant of transients and vibrations, and are more accurate than an equivalent *panel instrument*. For example, an analog ammeter for switchboards might be 4–5 in square with a scale length of 6 in and an accuracy of ±1% of full scale. An equivalent analog panel ammeter might have a diameter of 2–3 in, a scale length of 1.5 in, and an accuracy of ±2% of full scale. Accuracy at low scale decreases significantly with some instruments. Digital instruments often have accuracy ratings as a percentage of the reading plus or minus one or more reading digits. With both types of instruments, it is always recommended to specify the size, scale, and accuracy needed. Some of the common instruments are discussed below. (Also see ANSI C39.1-1981 [B4][1] for standard sizes, scales, and accuracies.)

The full-scale reading for analog instruments equals, or is a function of, the primary rating of the instrument transformers. For example, a full-scale reading with a 1200:5 current transformer will be 1200 A for a 5 A instrument. If the load current is considerably less than 1200 A, the readings will be less accurate and may be difficult to read. In this example, the user may wish to specify a 2.5 A instrument for better accuracy and ease of reading.

Digital instruments normally permit programming the instrument transformer ratio and have low burden. They have higher resolution and accuracy over a wider range. This offers users greater flexibility when specifying instrument transformer ratios and instrument full scale ratings.

11.3.1 Ammeters

Ammeters are used to measure the current that flows in a circuit. If the current is less than 5 A, an ammeter is directly connected in the circuit to be measured. If the current is high, the ammeter is connected to a current transformer or to a shunt. Selector switches are often installed so that one ammeter may be connected to any phase or turned off.

11.3.2 Voltmeters

Voltmeters are used to measure the potential difference between conductors or terminals. A voltmeter is connected directly across the points between which the potential difference is to be measured. Voltage (potential) transformers are generally required when more than 120 V is monitored. Selector switches are often installed so that one voltmeter may be connected between any phases or turned off.

11.3.3 Wattmeters

A wattmeter measures the magnitude of electric power being delivered to a load. Proper application of this instrument requires correct polarity and phasing of both voltage and current. Scale factors for wattmeters typically indicate kilowatts or megawatts.

[1]The numbers in brackets preceded by the letter B correspond to those in the bibliography in 11.10.

Copyright The Institute of Electrical and Electronics Engineers, Inc.
Provided by IHS under license with IEEE
No reproduction or networking permitted without license from IHS
Not for Resale

11.3.4 Varmeters

A varmeter measures reactive power. Varmeters usually have the zero point at the center of the scale, since reactive power may be leading or lagging. The varmeter has an advantage over a power-factor meter in that the scale is linear; thus small variations in reactive power can be read. Scale factors for varmeters typically indicate kilovars or megavars.

11.3.5 Power-factor meters

A power-factor meter indicates the power factor of a load. The meter indicates unity power factor at center scale, leading power factor to the left of center, and lagging power factor to the right of center. Power-factor meters are reasonably accurate only when adequately loaded. When accuracy is desired throughout the load range, a wattmeter and a varmeter should be used in combination. Many power-factor meters can monitor only one phase at a time. This often leads to erroneous conclusions if the phase loads are not similar and if only one reading is taken. The proper selection of a power-factor meter or other instrument intended to monitor multiphase systems depends on the system to be monitored; for example, 3-phase, 3-wire; 3-phase, 4-wire wye; 3-phase, 4-wire delta, etc.

11.3.6 Frequency meters

The frequency of an ac power supply can be measured directly by a frequency meter. Two commonly used types are the pointer-indicating and the vibrating-reed. These instruments are connected in the same way as voltmeters.

11.3.7 Synchroscopes

A synchroscope shows the phase-angle difference between two systems and is used wherever two generators or systems are to be connected in parallel or where a generator will be operated in parallel with the utility system. A synchroscope has the appearance of a switchboard instrument except that the pointer is free to revolve 360°. When the frequency of the system being synchronized is too low, the pointer rotates in one direction; when it is too high, the pointer rotates in the opposite direction. When the frequency is the same, the pointer stands still. When the voltages are equal and the pointer indicates a zero angular difference, the circuits are in phase, and the systems may be safely paralleled.

11.3.8 Elapsed-time meters

Elapsed-time meters have a small, synchronous motor that drives cyclometer dials. The dials register the cumulative amount of time a circuit or apparatus is in operation.

11.4 Portable instruments

A portable instrument has the same functions as a switchboard instrument but is typically installed in a case for protection. Ordinarily, portable instruments have many ranges and functions. They are useful for special tests or for augmenting other measuring instruments

Copyright The Institute of Electrical and Electronics Engineers, Inc.
Provided by IHS under license with IEEE
No reproduction or networking permitted without license from IHS Not for Resale

mounted on a switchboard. Portable current and voltage (potential) transformers are also available for situations when the range of the portable instrument is not sufficient for the values to be measured. They thus provide flexible instrumentation for various conditions.

Users of portable instruments must be aware of the maximum voltage, current, and other ratings of the instrument. Attempting to use an instrument beyond its capabilities may cause serious injury to the user. Also, care must be exercised to be sure the test leads are properly connected before applying the test probes to the energized circuit. Measuring voltage with a multimeter connected for current could result in a damaged meter, an unexpected process shutdown, or even injury.

11.4.1 Clamp-on ammeters

A clamp-on ammeter uses a split-core current transformer to encircle a conductor and determine the amount of ac current flowing. It usually has several current ranges. Hall effect clamp-on current transformers will read dc currents in addition to ac currents.

11.4.2 Volt-ohmmeter (VOM), digital multimeter (DMM)

This instrument can indicate a wide range of voltages, resistances (in ohms), and currents (in milliamperes). It is particularly useful for investigating circuit problems. Several of these instruments record higher currents using portable clamp-on current transformers with typical ratios of 1000:1 in conjunction with a milliampere scale on the VOM. Hall effect devices are also available that typically produce 1 mV/A.

11.5 Recording instruments

Many direct-reading, indicating instruments are available as recording or curve-drawing instruments for portable or switchboard use. Older recording methods use strip or circular charts. The record may be continuous, or readings can be taken at regular intervals. The chart moves at a constant speed by a spring or electrical clock. Recording instruments have special design problems that indicating instruments do not have. One problem is the need to overcome pen friction without impairing the accuracy of the recording.

Modern instruments and meters are available with electronic recording capability, or with memory which can be read by other computers. These instruments permit more data storage and thereby allow additional calculations and analysis. They eliminate the maintenance and service required for chart type recorders.

11.5.1 Power line disturbance analyzers

Power line disturbance analyzers are a class of specialized recording instrumentation designed to record voltage and/or current disturbances in power systems. Some record temperature, humidity, radiated radio-frequency energy, sequence of events, and other useful data. They have adjustable disturbance thresholds that often include fast transients usually less than 1 ms, waveshape disturbances, momentary changes in average voltage lasting

Copyright The Institute of Electrical and Electronics Engineers, Inc.
Provided by IHS under license with IEEE
No reproduction or networking permitted without license from IHS
Not for Resale

between about 1 cycle and 2 s, long-term changes in average voltage, and harmonic distortion. Disturbance analyzers report data in non-volatile memory, computer diskettes, video displays, paper tape, or any combination of these. Several have the ability to interface with personal computers by means of direct connection, modem, or floppy diskette.

Users must be careful to interpret the output from disturbance analyzers because of their unique properties. For example, many waveform disturbance analyzers will not record or display impulses less than the threshold setting. The display may show impulses above the threshold but may not display impulses less than the threshold even though they occurred in the same "event."

11.5.2 Load profile recorders

Load profile recorders are microprocessor controlled instruments that record voltage, current, watts, vars, power factor, voltamperes, and harmonic power levels in a power system. Demand intervals, min/max readings, and other reporting characteristics are programmable. These recorders often can interface with personal computers in manners similar to disturbance analyzers.

11.5.3 Computer data acquisition systems

Several add-on circuit modules are available that operate with custom software to convert personal computers into powerful data acquisition systems and data loggers. These systems typically offer 8 to 16 channels that feed a multiplexed analog and digital converter. The converter typically has 12- or 16-bit resolution for very accurate recordings so long as a large portion of the dynamic range is used. These systems typically require signal conditioning amplifiers to provide voltage reduction and isolation and to prevent aliasing errors.

11.5.4 Oscillographs

An oscillograph is an instrument for observing and recording rapidly changing values of short duration, such as the waveform of alternating voltage, current, or power transients. They are available for a wide range of frequencies.

11.6 Miscellaneous instruments

11.6.1 Temperature indicators

Temperature-indicating and temperature-control devices include liquid, gas, or saturated-vapor thermometers; resistance thermometers; bimetal thermometers; and radiation pyrometers. Some have electric contacts for use on an alarm device or relay circuit. Their application determines the type of sensor required.

--`,,`,,`-`-`,,`,,`,`,,`---

Copyright The Institute of Electrical and Electronics Engineers, Inc.
Provided by IHS under license with IEEE
No reproduction or networking permitted without license from IHS Not for Resale

11.6.2 Megohmmeters

A megohmmeter tests the insulation resistance of electric cables, insulators, buses, motors, and other electric equipment. It consists of a hand-cranked or motor-driven dc generator and resistance indicator. It is calibrated in megohms and is available in different voltage ratings, usually 500 Vdc, 1000 Vdc, or 2500 Vdc.

A resistance test of the electrical insulation, before placing equipment in service or during routine maintenance, will show the condition of the insulation. Wet or defective insulation can be very readily detected. A high reading, however, does not necessarily mean that the equipment's insulation can withstand rated potential since the megohmmeter's voltage normally is not equal to the equipment's rated potential. A high-potential test is commonly performed after the equipment has passed the megohmmeter test. Periodic testing and plotting the resistance readings will show trends that indicate possible problems.

11.6.3 Ground ohmmeters

A ground ohmmeter measures the resistance to earth of ground electrodes. It is calibrated in ohms, usually 0–300. Some types also provide for the measurement of soil resistance.

11.6.4 Oscilloscopes

Oscilloscopes are electronic instruments used to study very high frequencies or phenomena of short duration. They can be used to study transients that occur in power circuits. These instruments use electronic controls and an electron beam, thereby eliminating the inertia of mechanical instruments. Oscilloscopes can be used for frequencies up to millions of hertz. A storage scope will display this waveform for a short period, and a camera can be used with the oscilloscope to record the waveform permanently. Many oscilloscopes store and display the signal in a digital format of individual samples.

11.6.5 Phase rotation indicators

These instruments connect directly to all three phases of a three-phase system. They determine the phase rotation direction, ABC or CBA, to help assure motors will spin in the proper direction.

11.7 Meters

Meters are devices that distinguish and register the integral of a quantity over time.

11.7.1 Kilowatthour meters

A kilowatthour meter measures the amount of energy consumed by a load. AC kilowatthour meters often use an induction-disk type of mechanism. The disk revolves at a speed proportional to the rate at which energy passes through the meter. The metered kilowatthours are indicated on a set of dials driven by the revolving disk through a gear train.

Copyright The Institute of Electrical and Electronics Engineers, Inc.
Provided by IHS under license with IEEE
No reproduction or networking permitted without license from IHS
Not for Resale

Solid-state kilowatthour meters use a wide variety of electronic methods to integrate energy over time. Many solid-state meters also record other quantities, such as kilovarhours, volts, amperes, and power factor.

The kilowatthour meter may be used to calculate the power being used by a load at the moment of testing. To calculate power, count the seconds for a given number of revolutions of the disk, and then use this formula:

$$\text{power (kilowatts)} = \frac{3.6 \cdot r \cdot K_h \cdot \text{multiplier}}{\text{seconds}}$$

K_h is the meter disk constant in watthours per revolution and r is the number of revolutions. The K_h will be noted on the kilowatthour meter. The multiplier is 1 unless a meter is installed with instrument transformers. If current transformers are installed, the multiplier is equal to the ratio of the current transformer. For example, 400:5 current transformers have a ratio of 80:1, and so the meter multiplier would be 80. If voltage (potential) transformers are also installed, the meter multiplier is the product of the current transformer ratio and the voltage transformer ratio. A meter connected to 400:5 (80:1 ratio) current transformers and 14 400:120 (120:1 ratio) voltage transformers would have an overall multiplier of 80 times 120, or 9600. Some newer electronic meters allow the user to program the meter with the multiplier. These meters display actual kilowatthours on the register.

Kilowatthour meters come in several classes. Below is a listing of the common classes along with the maximum current each can safely monitor.

- Class 10 10 A
- Class 20 20 A
- Class 100 100 A
- Class 200 200 A
- Class 320 320 A

High-current services would require a Class 10 or Class 20 meter employed with current transformers. For example, a 1000 A service would use 1000:5 (200:1 ratio) current transformers and a Class 10 (or Class 20) meter.

Kilowatthour meters typically are rated for either 120 or 240 V potential coils. Higher voltage applications require the use of voltage transformers.

The following kilowatthour meter application data can be used only as a general guideline. The number of phases, the number of wires, the amount of phase-to-phase current, and power-factor balance all have an effect on the number of stators (or coils) the kilowatthour meter should have. An unbalanced condition exists if the phase-to-phase differences in load current or load power factor are great.

The data in table 11-1 define the number of stators and, if required by the service voltage or load size, the number of current and voltage (potential) transformers required to properly meter common services.

Copyright The Institute of Electrical and Electronics Engineers, Inc.
Provided by IHS under license with IEEE
No reproduction or networking permitted without license from IHS Not for Resale

Table 11-1—Metering and instrument transformer requirements

Service voltage	Stators	CTs	PTs	Assumed load characteristic
1-phase, 2-wire	1	1	1	
1-phase, 3-wire	1	2	1	
1-phase, 3-wire	2	2	2	
1-phase, 3-wire (wye)	2	2	2	
3-phase, 3-wire (delta)	2	2	2	
3-phase, 4-wire (wye)	2½	3	2	balanced conditions
3-phase, 4-wire (wye)	3	3	3	
3-phase, 4-wire (delta)	3	3	3	
3-phase, 4-wire (delta)	2	3	2	balanced mid-tap voltage

Other factors used in selecting kilowatthour meters include the following:

— Type of mountings: socket, bottom-connected, switchboard
— Voltage: 120, 240, 240/120, etc.
— Register: clock, cyclometer (like an odometer), digital
— Type of load current bypass: automatic, manual

There is a high probability of error in selecting or connecting a kilowatthour meter, especially when using instrument transformers. If there is any doubt, consult a metering specialist. The high probability for error also applies to kilovarhour and demand meters. An excellent reference on all aspects of meters is the *Handbook for Electricity Metering* [B7].

11.7.2 Kilovarhour meters

A kilovarhour meter measures the amount of reactive energy—the integral of reactive power—drawn by a load. The internal mechanisms of the kilovarhour meter are identical to those of a kilowatthour meter. However, the potential applied to this meter is shifted 90 electrical degrees. A standard kilowatthour meter and a phase-shifting transformer can be connected to function as a kilovarhour meter.

To calculate kilovar demand, apply the timing formula defined in 11.7.1. Data from a kilovarhour meter and a kilowatthour meter may be used to calculate power factor by the following formula:

$$\text{power factor} = \cos\left(\arctan\left(\frac{\text{kvarh}}{\text{kWh}}\right)\right) \cdot 100\%$$

Copyright The Institute of Electrical and Electronics Engineers, Inc.
Provided by IHS under license with IEEE
No reproduction or networking permitted without license from IHS
Not for Resale

Most kilovarhour meters have a ratchet-type assembly to prevent them from running backwards. For this reason, depending upon the connection, they can record only lagging or leading kilovarhours.

11.7.3 Q-hour meter

A *Q*-hour meter is a kilowatthour meter with voltages displaced 60 electrical degrees (lagging) from the standard connection. Separate voltage phase-shifting transformers are not needed. A *Q*-hour meter combined with a watthour meter can measure power factor between limits of 0.50 lagging and 0.866 leading. The equation for calculating kilovarhours from kilo*Q*-hours is as follows:

$$\text{kilovarhours} = \frac{2 \cdot \text{kilo}Q\text{-hours} - \text{kilowatthours}}{\sqrt{3}}$$

11.7.4 Demand meters

Demand meters register the average power demand during a specified time interval. They record the demand for each interval or indicate the maximum demand since the meter was last reset. Demand meters are normally an attachment or added feature to kilowatthour meters.

A lagged demand meter indicates demand by a thermally driven pointer on a scale. The internal thermal characteristics of the meter determine the time interval. A red indicating demand pointer shows the load through the course of the high-load period. This pointer moves a black maximum pointer upscale with it. The black pointer will stay at the maximum value until the meter is read and reset. The demand of a constant load is reasonably approximated by this type of meter after two time intervals.

A demand meter records the average power during a specific interval. A kilowatthour meter equipped with a contactor device provides information on energy usage, with each impulse (contact closure) representing the usage of a specified amount of energy. The recording demand meter records the total number of impulses received during each time interval. The record may be on printed paper tape, a chart, punched tape, magnetic tape, or a computer memory system.

11.7.5 Voltage-squared (V^2) meters

Identified by a coined name (which is misleading because the meter reading directly determines effective voltage and not the square of voltage), a V^2 meter is an integrating meter similar in construction to a kilowatthour meter. The effective (rms) voltage for a time interval is the dial reading difference divided by the interval.

Copyright The Institute of Electrical and Electronics Engineers, Inc.
Provided by IHS under license with IEEE
No reproduction or networking permitted without license from IHS Not for Resale

11.7.6 Ampere-squared (A^2) meters

Identified by a coined name (which is misleading because the meter reading directly determines effective current and not the square of current), an A^2 meter is an integrating meter similar in construction to a kilowatthour meter. The effective (rms) current for a time interval is the dial reading difference divided by the interval.

11.8 Auxiliary devices

11.8.1 Current transformers

Current transformers insulate the instrument circuit from the primary voltage and produce an output current proportional to the input current. Care should be taken to ensure the current transformer is insulated for the full system voltage. For example, current transformers in the 600 V class are used for 480 V systems, and current transformers in the 15 kV class would be used for 13.8 kV systems.

Current transformers also reduce current through the connected instruments to values within the rating of the instrument elements, usually 5 A. The recommended ratio choice will supply about 5 A to the instruments when the monitored circuit load current is equal to the highest anticipated load under normal conditions.

A current transformer can generate a dangerously high secondary voltage when the secondary current circuit is open while primary current is flowing. Therefore, a shorting bar, test switch, or current jack must be provided to short-circuit the transformer secondary when the connected instrument is being tested. (Refer to the National Electrical Safety Code [NESC], Accredited Standards Committee C2-1993 [B1], Section 150.) A test switch or current jack allows connection of portable meters whenever needed.

Current transformers must have a secondary circuit ground at one point when they are required to be grounded. The National Electrical Code (NEC), ANSI/NFPA 70-1993 [B5], Section 250-L, specifies minimum grounding requirements for instrument transformers. The ground will establish a firm ground reference point and will restrict the buildup of static voltages caused by the high-voltage conductor(s).

The accuracy of a current transformer is affected by the burden (load) connected to the secondary coil. For this reason, it is recommended to keep the burden less than the rated burden. Choose a current transformer that can operate accurately with the burden of the connected meters and relays.

Metering current transformer standard burdens are as shown in table 11-2.

The accuracy of a current transformer or voltage transformer is usually stated as a percent at rated burden; that is, 0.3 at $B = 0.1$ means 0.3% accuracy at a maximum burden of 2.5 VA at 5 A.

Copyright The Institute of Electrical and Electronics Engineers, Inc.
Provided by IHS under license with IEEE
No reproduction or networking permitted without license from IHS
Not for Resale

Table 11-2—Standard current transformer burdens

Type	Maximum VA burden	Maximum external impedance
$B = 0.1$	2.5	0.1 Ω
$B = 0.2$	5.0	0.2 Ω
$B = 0.5$	12.5	0.5 Ω
$B = 1.0$	25.0	1.0 Ω
$B = 2.0$	50.0	2.0 Ω

11.8.2 Voltage (potential) transformers

Voltage (potential) transformers provide a secondary voltage compatible to the rating of the instrument's potential coil. Switches should be provided in the secondary circuit of the voltage transformer to disconnect the instrument for testing. The connected load should not exceed the VA rating of the transformer if accuracy is to be maintained.

For safety, the secondary circuit of a voltage transformer should be grounded. The NEC, Section 250-L, specifies minimum grounding requirements for instrument transformers. In most industrial applications, the primary and secondary circuits are fused. Furthermore, voltage transformers should be identified on one-line diagrams as an isolation or tagging point if the secondary may be energized while the primary source is disconnected.

11.8.3 Shunts

In dc measurements of current or energy, shunts are used to carry the main current to be measured. Ordinarily, the leads should be calibrated with the shunt with which they are to be used. The dc ammeter actually measures the millivolt drop across its shunt and is calibrated in terms of the current rating of its associated shunt.

11.8.4 Transducers

A transducer is a device that is used to transform one or more analog inputs into another analog value more suitable for usage in instrumentation. The output is related to the input(s) in a prescribed relationship. They are commonly used for remote metering or to provide analog data to programmable logic controllers and computers. They generally isolate the current and voltage transformer secondary circuits from the wiring to the remote location. Many transducers output a current in milliamperes that is proportional to the measured quantity. This allows the signals to be transmitted over long distances with small gauge wires.

Some transducers can now be replaced with digital multifunction power monitors that can communicate all measured parameters via one communication cable to a remote monitor or data acquisition device. These are similar to multifunction digital instruments/ meters, but do not include a local display or key pad.

Copyright The Institute of Electrical and Electronics Engineers, Inc.
Provided by IHS under license with IEEE
No reproduction or networking permitted without license from IHS Not for Resale

11.9 Typical installations

The following combinations of instruments and meters are commonly used in industrial switchgear. Some electronic metering equipment and some electronic overcurrent protection equipment combine many of these features as well as others in one package.

11.9.1 Equipment above 600 V

a) Utility supply and main feeder positions: voltmeter, ammeter, wattmeter, varmeter or power-factor meter, watthour meter, demand meter (optional), test block for portable instruments.

b) Plant feeders: ammeter, watthour meter (demand attachment optional), test block for portable instruments (optional).

c) Generators: voltmeter, ammeter, watthour meter, varmeter or power-factor meter (optional), synchroscope, frequency meter (optional), recording ammeter and voltmeter (optional), test block for portable instruments (optional).

d) Synchronous motors: ac and dc voltmeters (optional), ac and dc ammeters, wattmeter (optional), varmeter or power-factor meter (optional), watthour meter (optional), elapsed-time meter (optional).

e) Large induction motors: ammeter, voltmeter (optional), watthour meter (optional), elapsed-time meter (optional).

11.9.2 Equipment 600 V and lower

Because of added cost, these instruments are used in low-voltage feeders only when justified by a potential saving in operations or maintenance. If permanent instrumentation is not used, checks are made periodically with portable instruments. Test blocks should be provided when portable instruments are expected to be used.

a) Utility supply and main feeder positions: voltmeter, ammeter, wattmeter, varmeter or power-factor meter, demand meter (optional), test block for portable instruments (optional).

b) Plant feeders: ammeter, watthour meter (optional), test block for portable instruments (optional).

c) Generators: voltmeter, ammeter, watthour meter, varmeter or power-factor meter (optional), synchroscope, frequency meter, recording ammeter and voltmeter (optional).

d) Synchronous motors: ac and dc voltmeters (optional), ac and dc ammeters, wattmeter (optional), varmeter or power-factor meter (optional), watthour meter (optional), elapsed-time meter (optional).

e) Large induction motors: ammeter, voltmeter (optional), watthour meter (optional), elapsed-time meter (optional).

Copyright The Institute of Electrical and Electronics Engineers, Inc.
Provided by IHS under license with IEEE
No reproduction or networking permitted without license from IHS
Not for Resale

11.10 Bibliography

[B1] Accredited Standards Committee C2-1993, National Electrical Safety Code.

[B2] ANSI C12.1-1988, American National Standard Code for Electricity Metering.

[B3] ANSI C12.4-1984 through C12.17-1991, a series of American National Standards on electricity metering.

[B4] ANSI C39.1-1981 (Reaff 1992), American National Standard Requirements for Electrical Analog Indicating Instruments.

[B5] ANSI/NFPA 70-1993, The National Electrical Code.

[B6] *Electric Utility Engineering Reference Book, Volume 3: Distribution Systems,* Chapter 11H, Westinghouse Electric Corporation, Trafford, PA, 1965.

[B7] *Handbook for Electricity Metering,* Ninth Edition, Edison Electric Institute, Washington, DC, 1992.

[B8] IEEE Std C57.13-1978 (Reaff 1986), IEEE Standard Requirements for Instrument Transformers (ANSI).

[B9] IEEE Std 100-1992, IEEE Standard Dictionary of Electrical and Electronics Terms.

[B10] IEEE Std 242-1986 (Reaff 1991), IEEE Recommended Practice for Protection and Coordination of Industrial and Commercial Power Systems (IEEE Buff Book) (ANSI), Chapter 4.

Copyright The Institute of Electrical and Electronics Engineers, Inc.
Provided by IHS under license with IEEE
No reproduction or networking permitted without license from IHS Not for Resale

Chapter 12
Cable systems

12.1 Introduction

The primary function of cable is to carry energy reliably between source and utilization equipment. In carrying this energy, there are heat losses generated in the cable that must be dissipated. The ability to dissipate these losses depends on how the cables are installed, and this affects their ratings.

Cables may be installed in raceway, in cable trays, underground in duct or direct buried, in cable bus, as open runs of cable, or may be messenger supported.

The selection of conductor size requires consideration of the load current to be carried and the loading cycle, emergency overloading requirements and duration, fault clearing time and interrupting capacity of the cable overcurrent protection or source capacity, voltage drop, and ambient temperatures for the particular installation conditions. Caution must be exercised when locating conductors in high ambient heat areas so that the operating temperature will not exceed that designated for the type of insulated conductor involved.

Insulations can be classified in broad categories as solid insulations, taped insulations, and special purpose insulations. Cables incorporating these insulations cover a range of maximum and normal operating temperatures and exhibit varying degrees of flexibility, fire resistance, and mechanical and environmental protection.

The installation of cables requires care in order to avoid excessive pulling tensions that could stretch the conductor or insulation shield, or rupture the cable jacket when pulled around bends. The minimum bending radius of the cable or conductors should not be exceeded during pulling around bends, at splices, and particularly at terminations to avoid damage to the conductors. The engineer should also check each run to ensure that the conductor jamming ratio is correct and the maximum allowable sidewall pressure is not exceeded.

Provisions should be made for the proper terminating, splicing, and grounding of cables. Minimum clearances must be maintained between phases and between phase and ground for the various voltage levels. The terminating compartments should be designed and constructed to prevent condensation from forming. Condensation or contamination on medium voltage terminations could result in tracking over the terminal surface with possible flashover.

Many users test cables after installation and periodically test important circuits. Test voltages are usually dc of a level recommended by the cable manufacturer for the specific cable. Usually this test level is well below the dc strength of the cable, but it is possible for accidental flashovers to weaken or rupture the cable insulation due to the higher transient overvoltages that can occur from reflections of the voltage wave. IEEE Std 400-1987[1] provides a detailed discussion on cable testing.

[1]Information on references can be found in 12.14.

--`,,`,,`-`-`,,`,,`,`,,`---

Copyright The Institute of Electrical and Electronics Engineers, Inc.
Provided by IHS under license with IEEE
No reproduction or networking permitted without license from IHS
Not for Resale

The application and sizing of all cables rated up to 35 kV is governed by the National Electrical Code (NEC) (ANSI/NFPA 70-1993). Cable use may also be covered under state and local regulations recognized by the local electrical inspection authority having jurisdiction in a particular area.

The various tables in this chapter are intended to assist the electrical engineer in laying out and understanding, in general terms, requirements for the cable system under consideration.

12.2 Cable construction

12.2.1 Conductors

The two conductor materials in common use are copper and aluminum. Copper has historically been used for conductors of insulated cables due primarily to its desirable electrical and mechanical properties. The use of aluminum is based mainly on its favorable conductivity to weight ratio (the highest of the electrical conductor materials), its ready availability, and the lower cost of the primary metal.

The need for mechanical flexibility usually determines whether a solid or a stranded conductor is used, and the degree of flexibility is a function of the total number of strands. The NEC requires conductors of No. 8 AWG and larger to be stranded. A single insulated or bare conductor is defined as a conductor, whereas an assembly of two or more insulated conductors, with or without an overall covering, is defined as a cable.

Stranded conductors are available in various configurations, such as stranded concentric, compressed, compact, rope, and bunched, with the latter two generally specified for flexing service. Bunched stranded conductors consist of a number of individual strand members of the same size that are twisted together to make the required area in circular mils for the intended service. Unlike the individual strands in a concentric stranded conductor, illustrated in figure 12-1, the strands in a bunch stranded conductor are not controlled with respect to one another. This type of conductor is usually found in portable cords.

12.2.2 Comparison between copper and aluminum

Aluminum requires larger conductor sizes to carry the same current as copper. For equivalent ampacity, aluminum cable is lighter in weight and larger in diameter than copper cable. The properties of these metals are given in table 12-1.

The 36% difference in thermal coefficients of expansion and the different electrical nature of their oxide films require consideration in connector designs. An aluminum oxide film forms immediately on exposure of fresh aluminum surface to air. Under normal conditions it slowly builds up to a thickness of 3–6 nanometers (nm) and stabilizes at this thickness. The oxide film is essentially an insulating film or dielectric material and provides aluminum with its corrosion resistance. Copper produces its oxide rather slowly under normal conditions, and the film is relatively conducting, presenting no real problem at connections.

--`,,`,,`-`-`,,`,,`,`,,`---

Copyright The Institute of Electrical and Electronics Engineers, Inc.
Provided by IHS under license with IEEE
No reproduction or networking permitted without license from IHS Not for Resale

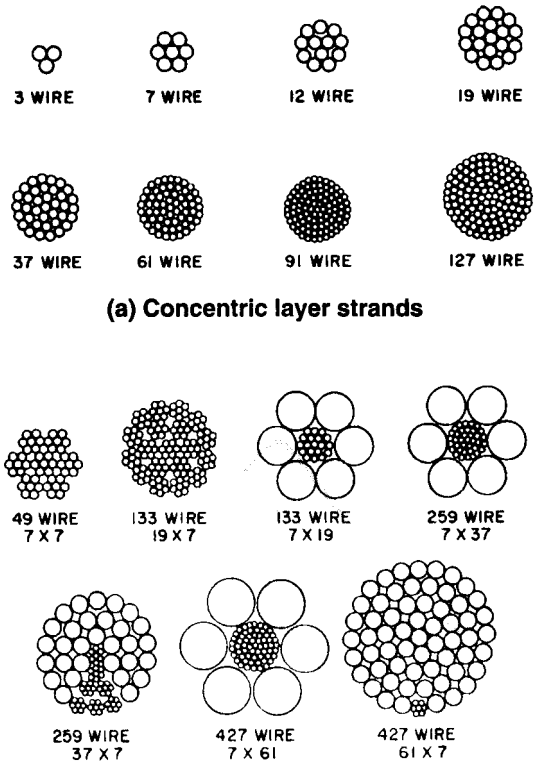

Figure 12-1—Conductor stranding

Approved connector designs for aluminum conductors essentially provide increased contact areas and lower unit stresses than are used for copper cable connectors. These terminals possess adequate strength to ensure that the compression of the aluminum strands exceeds their yield strength and that a brushing action takes place that destroys the oxide film to form an intimate aluminum contact area yielding a low-resistance connection. Recently developed aluminum alloys provide improved terminating and handling as compared to electrical conductor (EC) grades.

Water should be kept from entering the strand space in aluminum conductors at all times. Any moisture within a conductor, either copper or aluminum, is likely to cause corrosion of the conductor metal or impair insulation effectiveness.

12.2.3 Insulation

Basic insulating materials are classified as either organic or inorganic. A wide variety of insulations fall into the organic classification. Mineral-insulated cable employs the one inorganic insulation, magnesium oxide (MgO), that is generally available.

Copyright The Institute of Electrical and Electronics Engineers, Inc.
Provided by IHS under license with IEEE
No reproduction or networking permitted without license from IHS
Not for Resale

Table 12-1—Properties of copper and aluminum

Property	Copper electrolytic	Aluminum EC
Conductivity, % IACS* at 20 °C Resistivity, Ω · cmil/ft at 20 °C Specific gravity at 20 °C Melting point, °C	100.0 10.371 8.89 1083	61.0 17.002 2.703 660
Thermal conductivity at 20 °C, (cal · cm)/(cm^2 · °C · s)†	0.941	0.58
Specific heat, cal/(g · °C)† for equal weights for equal direct-current resistance	 0.092 0.184	 0.23 0.23
Thermal expansion, in; equal to constant · 10–6 length in inches · °F steel = 6.1 18-8 stainless = 10.2 brass = 10.5 bronze = 15	9.4	12.8
Relative weight for equal direct-current resistance and length	1.0	0.50
Modulus of elasticity, (lb/in^2) · 10^6	16	10

*International annealed copper standard.
†In this table, cal denotes the gram calorie.

Insulations in common use are the following:

a) Thermosetting compounds, solid dielectric
b) Thermoplastic compounds, solid dielectric
c) Paper laminated tapes
d) Varnished cloth, laminated tapes
e) Mineral insulation, solid dielectric granular

Most of the basic materials listed in table 12-2 must be modified by compounding or mixing with other materials to produce desirable and necessary properties for manufacturing, handling, and end use. The thermosetting or rubberlike materials are mixed with curing agents, accelerators, fillers, and antioxidants in varying proportions. Cross-linked polyethylene (XLPE) is included in this class. Generally, smaller amounts of materials are added to the thermoplastics in the form of fillers, antioxidants, stabilizers, plasticizers, and pigments.

Copyright The Institute of Electrical and Electronics Engineers, Inc.
Provided by IHS under license with IEEE
No reproduction or networking permitted without license from IHS Not for Resale

Table 12-2—Commonly used insulating materials

Common name	Chemical composition	Properties of insulation	
		Electrical	Physical
Thermosetting			
Cross-linked polyethylene	Polyethylene	Excellent	Excellent
EPR	Ethylene propylene rubber (copolymer and terpolymer)	Excellent	Excellent
Butyl	Isobutylene isoprene	Excellent	Good
SBR	Styrene butadiene rubber	Excellent	Good
Oil base	Complex rubber-like compound	Excellent	Good
Silicone	Methyl chlorosilane	Good	Good
TFE*	Tetrafluoroethylene	Excellent	Good
ETFE†	Ethylene tetrafluoroethylene	Excellent	Excellent
Neoprene	Chloroprene	Fair	Good
Class CP rubber‡	Chlorosulfonated polyethylene	Good	Good
Thermoplastic			
Polyethylene	Polyethylene	Excellent	Good
Polyvinyl chloride	Polyvinyl chloride	Good	Good
Nylon	Polyamide	Fair	Excellent

*For example, Teflon or Halon.
†For example, Tefzel.
‡For example, Hypalon.

a) *Insulation comparison*. The aging factors of heat, moisture, and ozone are among the most destructive to organic insulations, so the following comparisons are a gauge of the resistance and classifications of these insulations.

1) *Relative heat resistance*. The comparison in figure 12-2 illustrates the effect of a relatively short period of exposure at various temperatures on the hardness characteristic of the material at that temperature. The basic differences between thermoplastic and thermosetting insulation, excluding aging effect, are evident.

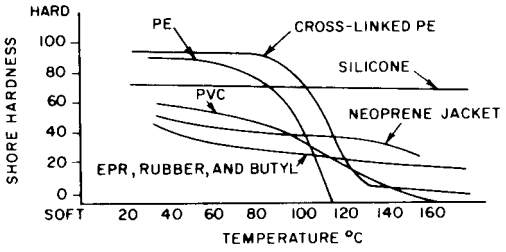

Figure 12-2—Typical values for hardness versus temperature

Copyright The Institute of Electrical and Electronics Engineers, Inc.
Provided by IHS under license with IEEE
No reproduction or networking permitted without license from IHS
Not for Resale

2) *Heat aging*. The effect on elongation of an insulation (or jacket) when subjected to aging in a circulating air oven is an acceptable measure of heat resistance. The air oven test at 121 °C, which is contained in some specifications, is severe, but provides a relatively quick method of grading materials for possible use at elevated conductor temperatures or in hot spot areas. The 150 °C oven aging is many times more severe and is used to compare materials with superior heat resistance. The temperature ratings of insulations in general use are shown in table 12-3. Depending upon the operating conditions, the maximum shield temperature must also be considered (see ICEA P-45-482-1979).

3) *Ozone and corona resistance*. Exposure to accelerated conditions, such as higher concentrations of ozone (as standardized by NEMA WC 5-1973) for butyl, 0.03% ozone for 3 h at room temperature, or air oven tests followed by exposure to ozone, or exposure to ozone at elevated temperatures, aids in measuring the ultimate ozone resistance of the material. Insulations exhibiting superior ozone resistance under accelerated conditions are silicone, rubber, polyethylene, cross-linked polyethylene (XLPE), ethylene propylene rubber (EPR), and polyvinyl chloride (PVC). In fact, these materials are, for all practical purposes, inert in the presence of ozone. However, this is not the case with corona discharge.

   The phenomenon of corona discharge produces concentrated and destructive thermal effects along with formation of ozone and other ionized gases. Although corona resistance is a property associated with cables over 600 V, in a properly designed and manufactured cable, damaging corona is not expected to be present at operating voltage. Materials exhibiting less susceptibility than polyethylene and XLPE to such discharge activity are the EPRs.

4) *Moisture resistance*. Insulations such as XLPE, polyethylene, and EPR exhibit excellent resistance to moisture as measured by standard industry tests, such as the ICEA Accelerated Water Absorption Test—Electrical Method (EM-60) (see NEMA WC 3-1980, NEMA WC 5-1973, NEMA WC 7-1988, and NEMA WC 8-1988). The electrical stability of these insulations in water as measured by capacitance and power factor is impressive. A degradation phenomenon called “treeing” has been found to be aggravated by the presence of water. This phenomenon appears to occur in solid dielectric insulations and is more prevalent in polyethylene and XLPE than in EPR. The capacitance and power factor of natural polyethylene and some cross-linked polyethylenes are lower than those of EPR or other elastomeric power cable insulations.

b) *Insulations in general use*. Insulations in general use for 2 kV and above are shown in table 12-3. Solid dielectrics, both thermoplastic and thermosetting, are used most frequently, while laminated constructions, such as paper and lead cables, are being used only on critical circuits in industrial facilities.

Copyright The Institute of Electrical and Electronics Engineers, Inc.
Provided by IHS under license with IEEE
No reproduction or networking permitted without license from IHS Not for Resale

Table 12-3—Rated conductor temperatures

Insulation type	Maximum voltage class (kV)	Maximum operating temperature (°C)	Maximum overload* temperature (°C)	Maximum short-circuit temperature (°C)
Paper (solid-type) multi-conductor and single conductor, shielded	9 29 49 69	95 90 80 65	115 110 100 80	200 200 200 200
Varnished cambric	5 15 28	85 77 70	100 85 72	200 200 200
Polyethylene (natural)†	5 35	75 75	95 90	150 150
SBR rubber	2	75	95	200
Butyl rubber	5 35	90 85	105 100	200 200
Oil-base rubber	35	70	85	200
Polyethylene (cross-linked)†	35	90	130	250
EPR rubber†	35	90	130	250
Chlorosulfonated polyethylene†	2	90	130	250
Polyvinyl chloride	2 2 2	60 75 90	85 95 105	150 150 150
Silicone rubber	5	125	150	250
Ethylene tetrafluoroethylene‡	2	150	200	250

*Operation at these overload temperatures shall not exceed 100 h/yr. Such 100 h overload periods shall not exceed five.
†Cables are available in 69 kV and higher ratings.
‡For example, Tefzel.

Copyright The Institute of Electrical and Electronics Engineers, Inc.
Provided by IHS under license with IEEE
No reproduction or networking permitted without license from IHS
Not for Resale

The generic names given for these insulations cover a broad spectrum of actual materials, and the history of performance on any one type may not properly be related to another in the same generic family.

12.2.4 Cable design

The selection of power cable for particular circuits or feeders should be based on the following considerations:

a) *Electrical*. Dictates conductor size, type and thickness of insulation, correct materials for low- and medium-voltage designs, consideration of dielectric strength, insulation resistance, specific inductive capacitance (dielectric constant), and power factor.
b) *Thermal*. Compatible with ambient and overload conditions, expansion, and thermal resistance.
c) *Mechanical*. Involves toughness and flexibility, consideration of jacketing or armoring, and resistance to impact, crushing, abrasion, and moisture.
d) *Chemical*. Stability of materials on exposure to oils, flame, ozone, sunlight, acids, and alkalies.
e) *Flame resistance*. Cables installed in cable tray must be listed by a nationally recognized testing laboratory as being flame retardant and marked for installation in cable tray. The marking may be “Type TC”, “TC”, “for use in cable trays”, or “for CT use”, depending on the voltage and construction.
f) *Low smoke*. The NEC authorizes the addition of the suffix “LS” to the cable marking on any cable construction that is flame retardant and has limited smoke characteristics. The criteria for “Limited Smoke” was being developed at the time this recommended practice was published. While the NEC does not specifically require the use of “LS” constructions in any area, this requirement might be considered for occupancies with large populations or high-rise occupancies.
g) *Toxicity.* All electrical wire and cable installed or terminated in any building in the State of New York after December 16, 1987, must have the toxicity level and certain other data for the product on file with the New York Secretary of State.

The installation of cable in conformance with the NEC and state and local codes under the jurisdiction of a local electrical inspection authority requires evidence of Listing for use in the intended application and occupancy by a nationally recognized testing laboratory, such as Underwriters Laboratories (UL). Some of the more common industrial types listed in the NEC types are discussed in 12.2.4.1 through 12.2.4.4.

12.2.4.1 Low-voltage cables

Low-voltage power cables are generally rated at 600 V, regardless of the voltage used, whether 120 V, 208 V, 240 V, 277 V, 480 V, or 600 V.

The selection of 600 V power cable is oriented more toward physical rather than electrical service requirements. Resistance to forces, such as crush, impact, and abrasion becomes a predominant factor, although good electrical properties for wet locations are also needed.

Copyright The Institute of Electrical and Electronics Engineers, Inc.
Provided by IHS under license with IEEE
No reproduction or networking permitted without license from IHS Not for Resale

The 600 V compounds of cross-linked polyethylene (XLPE) are usually filled with carbon black or mineral fillers to further enhance the relatively good toughness of conventional polyethylene. The combination of cross-linking the polyethylene molecules through vulcanization plus fillers produces superior mechanical properties. Vulcanization eliminates polyethylene's main drawback of a relatively low melting point of 105 °C. The 600 V construction consists of a copper or aluminum conductor with a single extrusion of insulation in the specified thickness.

Rubber-like insulations, such as ethylene propylene rubber (EPR) and styrene butadiene rubber (SBR), require outer jackets for mechanical protection, usually of polyvinyl chloride (PVC), neoprene, or CP rubber. However, the newer EPR insulations have improved physical properties that do not require an outer jacket for mechanical protection. A list of the more commonly used 600 V conductors and cables is provided below. Cables are classified by conductor operating temperatures and insulation thicknesses in accordance with the NEC.

a) *EPR or XLPE insulated, with or without a jacket*. Type RHW for 75 °C maximum operating temperature in wet or dry locations, Type RHH for 90 °C in dry locations only, and Type RHW-2 for 90 °C maximum operating temperature in wet and dry locations.
b) *XLPE or EPR insulated, without jacket*. Type XHHW for 75 °C maximum operating temperature in wet locations and 90 °C in dry locations only, and Type XHHW-2 for 90 °C maximum operating temperature in wet and dry locations.
c) *PVC insulated, nylon jacketed*. Type THWN for 75 °C maximum operating temperature in wet or dry locations, and Type THHN for 90 °C in dry locations only.
d) *PVC insulated, without jacket*. Type THW for 75 °C maximum operating temperature in wet or dry locations.

The preceding conductors are suitable for installation in conduit, duct, or other raceway, and, when specifically approved for the purpose, may be installed in cable tray (1/0 AWG and larger) or direct-buried, provided NEC requirements are satisfied.

Cables in items b and d are usually restricted to conduit or duct. Single conductors may be furnished paralleled or multiplexed, as multiconductor cables with an overall nonmetallic jacket or as aerial cable on a messenger.

e) *Metal-clad cable, Type MC*. A multiconductor cable employing either an interlocking tape armor or a continuous metallic sheath (corrugated or smooth), with or without an overall jacket. The maximum temperature rating of the cable is based upon the temperature rating of the individual insulated conductors used, which are usually Type XHHW, XHHW-2, RHH/RHW, or RHW-2. Type MC cable may be installed in any raceway, in cable tray, as open runs of cable, direct buried, or as aerial cable on a messenger.
f) *Power and control tray cable, Type TC*. A multiconductor cable with an overall flame-retardant nonmetallic jacket. The individual conductors may be any of the above and the cable has the same maximum temperature rating as the conductors used. Type TC may be installed in cable trays, raceways, or where supported in outdoor locations by a messenger wire.

Copyright The Institute of Electrical and Electronics Engineers, Inc.
Provided by IHS under license with IEEE
No reproduction or networking permitted without license from IHS
Not for Resale

Note that the temperatures listed are the maximum rated operating temperatures as specified in the NEC.

12.2.4.2 Power-limited circuit cables

When the power in the circuit is limited to the levels defined in Article 725 of the NEC for remote-control, signaling, and power-limited circuits, then Class 2 (CL2) or Class 3 (CL3) power-limited circuit cables or Power Limited Tray Cable (Type PLTC) may be utilized as the wiring method. These cables, which are rated 300 V, include copper conductors for electrical circuits and thermocouple alloys for thermocouple extension wire.

Cables installed in ducts, plenums, and other spaces used for environmental air must be plenum cable Type CL2P or CL3P. Cables installed in vertical runs and penetrating more than one floor, or cables installed in vertical runs in a shaft must be riser cable Type CL2R or CL3R. Limited-Use Type CL2X or CL3X cables may be installed in dwellings or in raceway in buildings. Cables installed in cable tray must be Type PLTC.

If the circuit is not Class 2 or Class 3 power-limited, then 600 V branch circuit conductors or cable must be used.

Similarly power-limited fire-protective signaling circuit cable may be used on circuits that comply with the power limitations of Article 760 of the NEC. Type FPLP cable is required for plenums, Type FPLR cable for risers, and Type FPL cable for general-purpose fire alarm use. If the circuit is not power-limited, then 600 V cables must be used. Type NPLFP cable is required for plenums, Type NPLFR cable for risers, and Type NPLF cable for general-purpose fire alarm use.

12.2.4.3 Medium-voltage cables

Type MV (medium voltage) power cables have solid extruded dielectric insulation and are rated from 2001–35 000 V. These single conductor and multiconductor cables are available with nominal voltage ratings of 5 kV, 8 kV, 15 kV, 25 kV, and 35 kV. Solid dielectric 69 kV and 138 kV transmission cables are also available, however, they are not listed in the NEC.

EPR and XLPE are the usual insulating compounds for Type MV cables; however, polyethylene and butyl rubber are also available. The maximum operating temperatures are 90 °C for EPR and XLPE, 85 °C for butyl rubber, and 75 °C for polyethylene.

Type MV cables may be installed in raceways in wet or dry locations. The cable must be specifically listed for installation in cable tray, direct burial, exposure to sunlight, exposure to oils, or for messenger supported wiring.

Multiconductor Type MV cables that also comply with the requirements for Type MC metal-clad cables may be labeled as Type MV or MC and may be installed as open runs of cable.

--`,,`,,`-`-`,,`,,`,`,,`---

Copyright The Institute of Electrical and Electronics Engineers, Inc.
Provided by IHS under license with IEEE
No reproduction or networking permitted without license from IHS Not for Resale

12.2.4.4 Shielding of medium-voltage cable

For operating voltages below 2 kV, nonshielded constructions are normally used. Above 2 kV, cables are required to be shielded to comply with the NEC and ICEA standards. The NEC does permit the use of nonshielded cables up to 8 kV provided the conductors are listed by a nationally recognized testing laboratory and are approved for the purpose. Where nonshielded conductors are used in wet locations, the insulated conductor(s) must have an overall nonmetallic jacket or a continuous metallic sheath, or both. Refer to the NEC for specific insulation thicknesses for wet or dry locations.

Since shielded cable is usually more expensive than nonshielded cable, and the more complex terminations require a larger terminal box, nonshielded cable has been used extensively at 2400 and 4160 V and occasionally at 7200 V. However, any of the following conditions may dictate the use of shielded cable:

a) Personnel safety
b) Single conductors in wet locations
c) Direct earth burial
d) Where the cable surface may collect unusual amounts of conducting materials (e.g., salt, soot, conductive pulling compounds)

Shielding of an electric power cable is commonly referred to as the practice of confining the electric field of the cable to the insulation surrounding the conductor by means of conducting or semiconducting layers, or both, which are in intimate contact or bonded to the inner and outer surfaces of the insulation. In other words, the outer insulation shield confines the electric field to the space between the conductor and the shield. The inner or strand stress relief layer is at or near the conductor potential. The outer or insulation shield is designed to carry the charging currents and, in many cases, fault currents. The conductivity of the shield is determined by its cross-sectional area and the resistivity of the metal tapes or wires employed in conjunction with the semiconducting layer.

The metallic shield, which is available in several forms, is an electrostatic shield and is not designed to carry fault currents. The most common is the tape shield consisting of a copper tape, 3–5 mils thick, which is helically applied over the insulation shield.

A modification of the tape shield consists of a corrugated copper tape applied longitudinally over the insulation shield. This permits full electrical use of the tape as a current-carrying conductor, and it is capable of carrying a much greater fault current than a helically wrapped tape.

Another type is a wire shield, where copper wires are helically applied over the insulation screen with a long lay. Typically, a wire shield will have 15–20% less cross-sectional area than a tape shield.

A modification of the wire shielding system consists of six corrugated copper drain wires embedded in an extruded black conducting chlorinated polyethlene (CPE) combination insulation shield and jacket.

Copyright The Institute of Electrical and Electronics Engineers, Inc.
Provided by IHS under license with IEEE
No reproduction or networking permitted without license from IHS
Not for Resale

An extruded lead sheath may also be used as a combination shield and mechanical covering. The thickness of the lead can be varied to provide the desired cross-sectional area to carry the required fault current. The lead also provides an excellent moisture barrier for direct burial applications.

The stress-control layer at the inner and outer insulation surfaces, by its close bonding to the insulation surface, presents a smooth surface to reduce the stress concentrations and minimize void formation. Ionization of the air in such voids can progressively damage insulating materials and eventually cause failure.

Insulation shields have several purposes:

a) To confine the electric field within the cable
b) To equalize voltage stress within the insulation, minimizing surface discharges
c) To protect cable from induced potentials
d) To limit electromagnetic or electrostatic interference to communications receivers, e.g., radio, TV
e) To reduce shock hazard (when properly grounded)

Figure 12-3 illustrates the electrostatic field of a shielded cable.

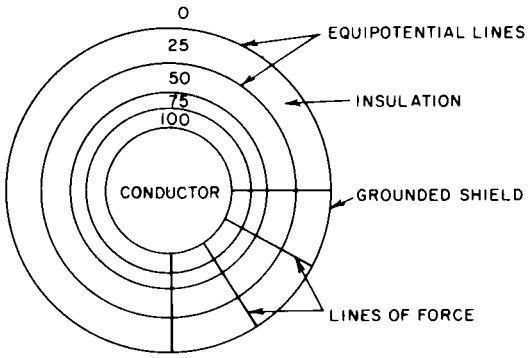

Figure 12-3—Electric field of shielded cable

The voltage distribution between a nonshielded cable and a grounded plane is illustrated in figure 12-4. Here, it is assumed that the air is the same, electrically, as the insulation, so that the cable is in a uniform dielectric above the ground plane to permit a simpler illustration of the voltage distribution and field associated with the cable.

In a shielded cable (see figure 12-3), the equipotential surfaces are concentric cylinders between conductor and shield. The voltage distribution follows a simple logarithmic variation, and the electrostatic field is confined entirely within the insulation. The lines of force and stress are uniform and radial and cross the equipotential surfaces at right angles, eliminating any tangential or longitudinal stresses within the insulation or on its surface.

Copyright The Institute of Electrical and Electronics Engineers, Inc.
Provided by IHS under license with IEEE
No reproduction or networking permitted without license from IHS Not for Resale

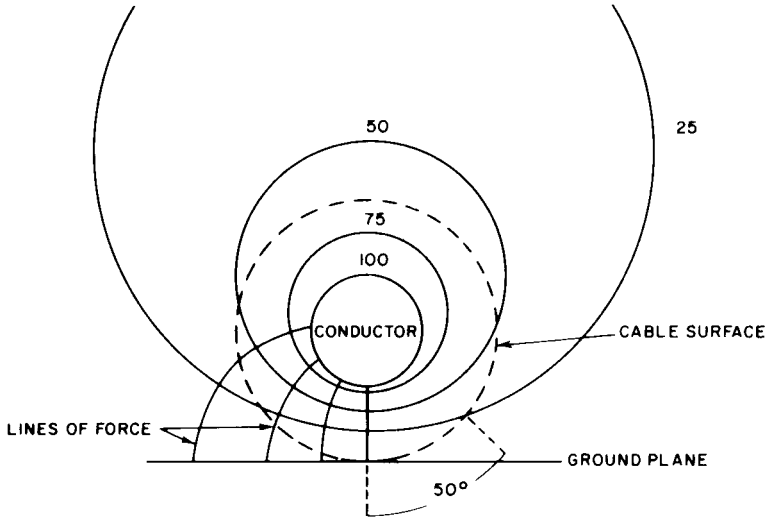

Figure 12-4—Electric field of conductor on ground plane in uniform dielectric

The equipotential surfaces for the nonshielded system (see figure 12-5) are cylindrical but not concentric with the conductor and cross the cable surface at many different potentials. The tangential creepage stress to ground at points along the cable may be several times the normal recommended stress for creepage distance at terminations in dry locations for nonshielded cable operating on 4160 V systems.

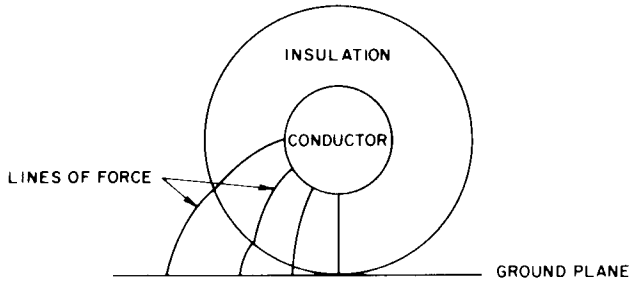

Figure 12-5—Electric field of nonshielded cable on ground plane

Surface tracking, burning, and destructive discharges to ground could occur under these conditions. However, properly designed nonshielded cables, as described in the NEC, limit the surface energies available, which could protect the cable from these effects.

Copyright The Institute of Electrical and Electronics Engineers, Inc.
Provided by IHS under license with IEEE
No reproduction or networking permitted without license from IHS
Not for Resale

Typical cables supplied for shielded and nonshielded applications are illustrated in figure 12-6.

12.3 Cable outer finishes

Cable outer finishes or outer coverings are used to protect the underlying cable components from the environmental and installation conditions associated with the intended service. The choice of a cable outer finish for a particular application is based on the same performance criteria as used for insulations, namely electrical, thermal, mechanical, and chemical. A combination of metallic and nonmetallic coverings are available to provide the total protection needed for the particular installation and operating conditions. Specific industry requirements for these coverings are defined in IEEE, UL, ICEA, and ASTM Standards.

12.3.1 Nonmetallic finishes

a) *Extruded Jackets*. There are outer coverings, either thermoplastic or vulcanized, that may be extruded directly over the insulation, or over electrical shielding systems of metal sheaths or tapes, copper braid, or semiconducting layers with copper drain wires or spiraled copper concentric wires, or over multiconductor constructions. Commonly used materials include polyvinyl chloride (PVC), chlorinated polyethylene (CPE), nitrile butadiene/polyvinyl chloride (NBR/PVC), cross-linked polyethylene (XLPE), polychloroprene (neoprene), and chlorosulfonated polyethylene (hypalon). While the detailed characteristics may vary due to individual manufacturers' compounding, these materials provide a high degree of moisture, chemical, and weathering protection, are reasonably flexible, provide some degree of electrical isolation, and are of sufficient mechanical strength to protect the insulating and shielding components from normal service and installation damage. Materials are available for service temperatures from –55 °C to +115 °C.

b) *Fiber braids*. This category includes braided, wrapped, or served synthetic or natural fiber materials selected by the cable manufacturer to best meet the intended service. While asbestos fiber has been the most common material used in the past, fiberglass is now used extensively for employee health reasons. Some special industrial applications may require synthetic or cotton fibers applied in braid form. All fiber braids require saturants or coating and impregnating materials to provide some degree of moisture and solvent resistance as well as abrasive and weathering resistance.

Glass braid is used on cables to minimize flame propagation, smoking, and other hazardous or damaging products of combustion.

12.3.2 Metallic finishes

This category of materials is widely used where a high degree of mechanical, chemical, or short-time thermal protection of the underlying cable components is required by the application. Commonly used materials are interlocked galvanized steel, aluminum, or bronze armor; extruded lead or aluminum; longitudinally applied, welded, and corrugated aluminum or cop-

Copyright The Institute of Electrical and Electronics Engineers, Inc.
Provided by IHS under license with IEEE
No reproduction or networking permitted without license from IHS Not for Resale

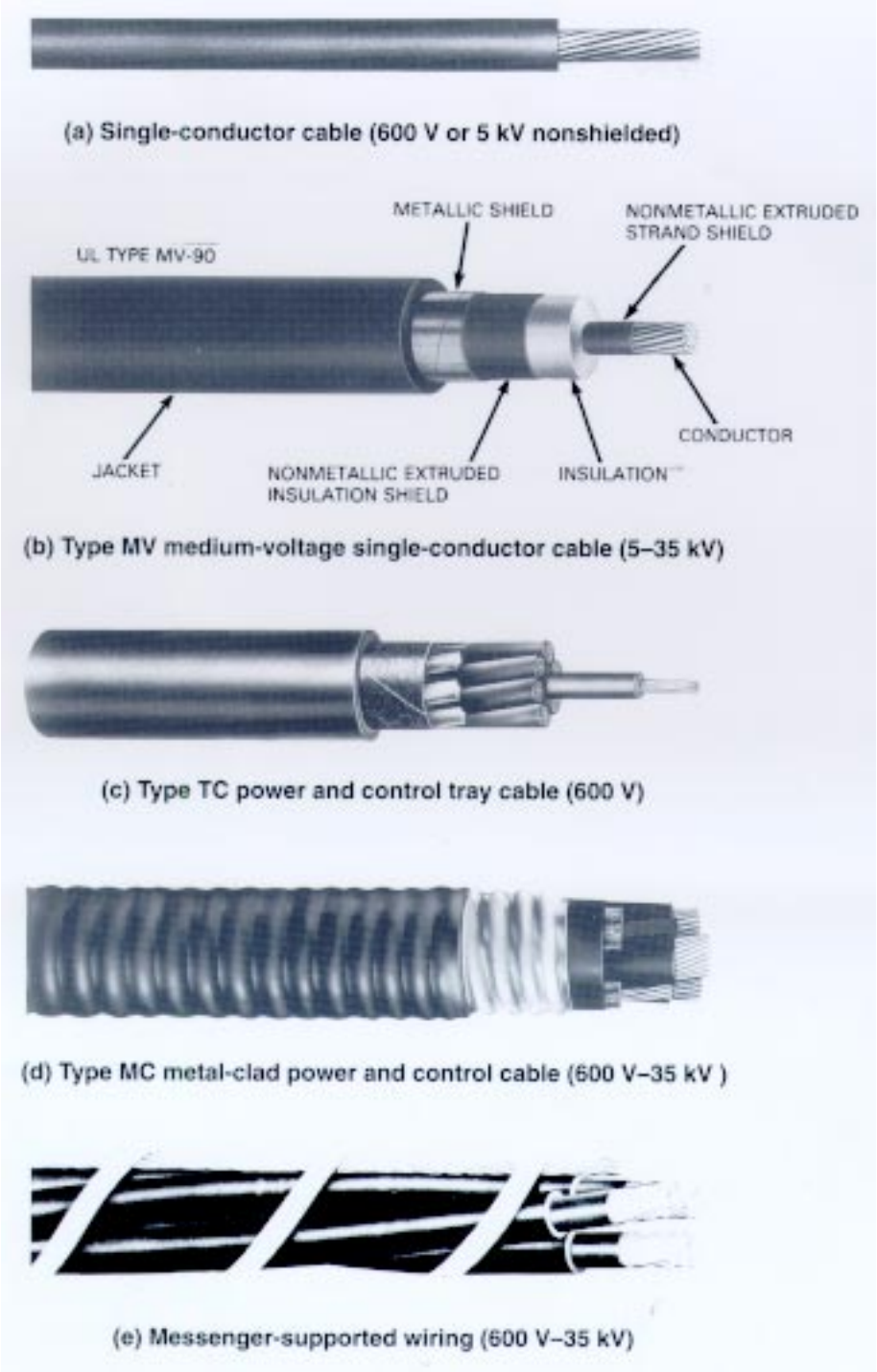

Figure 12-6—Commonly used shielded and nonshielded constructions

Copyright The Institute of Electrical and Electronics Engineers, Inc.
Provided by IHS under license with IEEE
No reproduction or networking permitted without license from IHS
Not for Resale

per sheath; and helically applied round or flat armor wires. The use of any of these materials, alone or in combination with others, does reduce flexibility of the overall cable.

Installation and operating conditions may involve localized compressive loadings, occasional impact from external sources, vibration and possible abrasion, heat shock from external sources, extended exposure to corrosive chemicals, and condensation.

a) *Interlocked armor.* Provides mechanical protection with minimum reduction in flexibility. While not entirely impervious to moisture or corrosive agents, interlocked armor does provide mechanical protection against impact and abrasion and protection from thermal shock by acting as a heat sink for short periods of localized exposure.

   When moisture protection is required, an inner jacket over the cable core and under the armor is required. If an inner jacket is not used, 600 V cables in wet locations can only be rated for 75 °C unless the newer RHW-2 or XHHW-2 conductors are used, in which case the cable can then be rated 90 °C wet or dry.

   Where corrosion resistance is required for either environmental conditions, direct burial, or embedment in concrete, an overall jacket is required.

   The use of interlocked galvanized steel armor should be avoided on single-conductor ac power circuits due to the high hysteresis and eddy current losses. This effect, however, is minimized by using three conductor cables with overall armor or with aluminum armor on single conductor cables.

   Commonly used interlocked armor materials are galvanized steel, aluminum (for less weight and corrosion resistance), marine bronze, and other alloys for highly corrosive atmospheres.

b) *Corrugated metal sheath.* Longitudinally welded and corrugated metal sheaths (corrugations formed perpendicular to the cable axis) have been used for many years in direct buried communications cables, but only since 1960 has this method of cable core protection been applied to control and power cable. The sheath material may be of copper, aluminum, copper alloy, or a bimetallic composition with the choice of material selected to best meet the intended service.

   The corrugated metal sheath offers mechanical protection equal or greater than interlocked armor but at a lower weight. The aluminum or copper sheath may also be used as the equipment grounding conductor, either alone or in parallel with a grounding conductor within the cable.

   The sheath is made from a metal strip that is longitudinally formed around the cable, welded into a continuous, impervious metal cylinder, and corrugated for pliability and increased radial strength. This sheath offers maximum protection from moisture and liquid or gaseous contaminants. An extruded nonmetallic jacket must be used over the metal sheath for direct burial, embedment in concrete, or in areas that are corrosive to the metal sheath. This cable construction is always rated 90 °C in wet or dry locations.

Copyright The Institute of Electrical and Electronics Engineers, Inc.
Provided by IHS under license with IEEE
No reproduction or networking permitted without license from IHS Not for Resale

c) *Lead.* Pure or lead alloy is occasionally used for power cable sheaths for moisture protection in underground manhole and tunnel, or underground duct distribution systems subject to flooding. While not as resistant to crushing loads as interlocked armor or a corrugated metal sheath, its very high degree of corrosion and moisture resistance makes lead attractive in these applications. Protection from installation damage can be provided by an outer jacket of extruded material.

Pure lead is subject to work hardening and should not be used in applications where flexing may be involved. Copper- or antimony-bearing lead alloys are not as susceptible to work hardening as pure lead, and may be used in applications involving limited flexing. Lead or its alloys must *never* be used for repeated flexing service.

One problem encountered today with the use of lead sheathed cable is in the area of splicing and terminating. Installation personnel experienced in the art of wiping lead sheath joints are not as numerous as they were many years ago, which poses an installation problem for many potential users. However, many insulation systems do not require lead sleeves at splices and treat the lead like any other metallic sheath.

d) *Aluminum or copper.* Extruded aluminum or copper sheaths, or die-drawn aluminum or copper sheaths, are used in certain applications for weight reduction and moisture penetration protection. While more crush-resistant than lead, aluminum sheaths are subject to electrolytic attack when installed underground. Under these conditions aluminum sheathed cable should be protected with an extruded outer jacket.

Mechanical splicing sleeves are available for use with aluminum sheathed cables, and sheath joints can be made by inert gas welding, provided that the underlying components can withstand the heat of welding without deterioration. Specifically designed hardware is available for terminating the sheath at junction boxes and enclosures.

e) *Wire armor.* Significant mechanical protection and particularly longitudinal strength can be obtained with the use of spirally wrapped or braided round steel armor wire. This type of outer covering is frequently used in submarine cable and vertical riser cable for mechanical protection and support. As noted for steel interlocked armor, this form of protection should be used only on three conductor power cables to minimize sheath losses.

12.3.3 Single and multiconductor constructions

Single conductor cables are usually easier to handle and can be furnished in longer lengths as compared to multiconductor cables. The multiconductor constructions have smaller overall dimensions than the same number of single conductor cables, which can be an advantage where space is important.

Sometimes the outer finish can influence whether the cable should be supplied as a single or multiconductor cable. For example, as mentioned previously, the use of steel interlocked or steel wire armor on ac cables is practical on multiconductor constructions, but should be

Copyright The Institute of Electrical and Electronics Engineers, Inc.
Provided by IHS under license with IEEE
No reproduction or networking permitted without license from IHS
Not for Resale

avoided on single conductor cables. It is also more economical to apply a metallic sheath or armor over multiconductor constructions rather than over each of the single conductor cables.

12.3.4 Physical properties of materials for outer coverings

Depending on the environment and application, the selection of outer finishes to provide the degree of protection needed can be complex. For a general appraisal, table 12-4 lists the relative properties of some commonly used materials.

Table 12-4—Properties of jackets and braids

Material	Abrasion resistance	Flexibility	Low temperature	Heat resistance	Fire resistance
Neoprene	Good	Good	Good	Good	Good
Class CP rubber*	Good	Good	Fair	Excellent	Good
Cross-linked polyethylene	Good	Poor	Poor	Excellent	Poor
Polyvinyl chloride	Fair	Good	Fair	Good	Fair
Polyurethane	Excellent	Good	Good	Good	Poor
Glass braid	Fair	Good	Good	Excellent	Excellent
Nylon	Excellent	Fair	Good	Good	Fair
ETFE	Excellent	Poor	Excellent	Good	Fair

NOTE—Chemical resistance and barrier properties depend on the particular chemicals involved, and the question should be referred to the cable manufacturer.

*For example, Hypalon.

12.4 Cable ratings

12.4.1 Voltage rating

The selection of the cable insulation (voltage) rating is made on the basis of the phase-to-phase voltage of the system in which the cable is to be applied, whether the system is grounded or ungrounded, and the time in which a ground fault on the system is cleared by protective equipment. It is possible to operate cables on ungrounded systems for long periods of time with one phase grounded due to a fault. This results in line-to-line voltage stress across the insulation of the two ungrounded conductors. Therefore, such cable must have greater insulation thickness than a cable used on a grounded system where it is impossible to

Copyright The Institute of Electrical and Electronics Engineers, Inc.
Provided by IHS under license with IEEE
No reproduction or networking permitted without license from IHS Not for Resale

impose full line-to-line potential on the other two unfaulted phases for an extended period of time.

Therefore, 100% insulation level cables are applicable to grounded systems provided the protection devices will clear ground faults within 1 min. On ungrounded systems where the clearing time of the 100% level category cannot be met, and yet there is adequate assurance that the faulted section will be cleared within 1 h, 133% insulation level cables are required. On systems where the time required to de-energize a grounded section is indefinite, a 173% insulation level is used.

12.4.2 Conductor selection

The selection of conductor size is based on the following considerations:

a) Load current criteria as related to loadings, the NEC requirements, thermal effects of the load current, mutual heating, losses produced by magnetic induction, and dielectric losses
b) Emergency overload criteria
c) Voltage drop limitations
d) Fault current criteria
e) Frequency criteria
f) Hot-spot temperature criteria
g) Length of cable in elevated ambient temperature areas
h) Equipment termination requirements

12.4.3 Load current criteria

The ampacity tables in the NEC for low- and medium-voltage cables must be used where the NEC applies. These are derived from IEEE S-135.

All ampacity tables show the minimum conductor size required, but conservative engineering practice, future load growth considerations, voltage drop, and short-circuit heating may make the use of larger conductors necessary.

Large groups of cables should be carefully considered, as deratings due to mutual heating may be limiting. Conductor sizes over 500 kcmil require the consideration of paralleling two or more smaller size cables because the current-carrying capacity per circular mil of conductor decreases for ac circuits due to skin effect and proximity effect. The reduced ratio of surface to cross-sectional area of the larger conductors is a factor in the reduced ability of the larger conductor to dissipate heat. When multiple cables are used, consideration must be given to the phase placement of the cables to minimize the effects of maldistribution of current in the cables, which will also reduce ampacity. Although the material cost of cable may be less for two smaller conductors, this cost saving may be offset by increased installation costs.

The use of load factor in underground runs takes into account the heat capacity of the duct bank and surrounding soil, that responds to average heat losses. The temperatures in the

Copyright The Institute of Electrical and Electronics Engineers, Inc.
Provided by IHS under license with IEEE
No reproduction or networking permitted without license from IHS
Not for Resale

underground section will follow the average loss, thus permitting higher short-period loadings. The load factor is the ratio of average load to peak load. The average load is usually measured on a daily basis; the peak load is the average of a 30 min to 1 h period of the maximum loading that occurs in 24 h.

For direct buried cables, the average cable surface temperature is limited to 60 °C to 70 °C, depending on soil conditions, to prevent moisture migration and thermal runaway.

Cables must be derated when in proximity to other loaded cables or heat sources, or when the ambient temperature exceeds the ambient temperature on which the ampacity (current-carrying capacity) tables are based.

The normal ambient temperature of a cable installation is the temperature the cable would assume at the installed location with no load being carried on the cable. A thorough understanding of this temperature is required for a proper determination of the cable size required for a given load. For example, the ambient temperature for a cable exposed in the air and isolated from other cables is the temperature of that cable before load is applied, assuming, of course, that this temperature is measured at the same time of day and with all other conditions exactly the same as they will be when the required load is being carried. It is also assumed that, for cables in air, the space around the cable is large enough so that the heat generated by the cable can be dissipated without raising the temperature of the room as a whole. Unless exact conditions are specified, the following ambients are commonly used for calculation of current-carrying capacity.

a) *Indoors*. The ampacity tables in the NEC are based upon an ambient temperature of 30 °C for low-voltage cables. In most parts of the United States, 30 °C is too low for summer months, at least for some parts of the building. The Type MV cable ampacity tables in the NEC are based upon a 40 °C ambient air temperature. In any installation where the conditions are accurately known, the measured temperature should be used; otherwise, use 40 °C. Refer to NEC Article 318 for cables installed in cable tray.

Sources of heat adjacent to the cables under the most adverse condition should be taken into consideration when calculating the current-carrying capacity. This is usually done by correcting the ambient temperature for localized hot spots. These may be caused by steam lines or other heat sources adjacent to the cable, or they may be due to sections of the cable running through boiler rooms or other hot locations. Rerouting may be necessary to avoid this problem.

b) *Outdoors*. An ambient temperature of 40 °C is commonly used as the maximum for cables installed in the shade and 50 °C for cables installed in the sun. In using these ambient temperatures, it is assumed that the maximum load occurs during the time when the ambient temperature will be as specified. Some circuits probably do not carry their full load during the hottest part of the day or when the sun is at its brightest, so that an ambient temperature of 40 °C for outdoor cables is probably reasonably safe for certain selected circuits; otherwise, use 50 °C. Refer to the NEC Article

Copyright The Institute of Electrical and Electronics Engineers, Inc.
Provided by IHS under license with IEEE
No reproduction or networking permitted without license from IHS Not for Resale

310 ampacity tables and associated notes for the calculations to be used for outdoor installations and Article 318 for cables installed in cable tray.

c) *Underground*. The ambient temperature used for underground cables varies in different sections of the country. For the northern sections, an ambient temperature of 20 °C is commonly used. For the central part of the country, 25 °C is commonly used, while for the extreme south and southwest, an ambient of 30 °C may be necessary. The exact geological boundaries for these ambient temperatures cannot be defined, and the maximum ambient should be measured in the earth at a point away from any sources of heat at the depth at which the cable will be buried. Changes in the earth ambient temperature will lag changes in the air ambient temperature by several weeks.

The thermal characteristics of the medium surrounding the cable are of primary importance in determining the current-carrying capacity of the cable. The type of soil in which the cable or duct bank is buried has a major effect on the current-carrying capacity of cables. Porous soils, such as gravel and cinder fill, usually result in a temperature increase and lower ampacities than normal sandy or clay soil. The type of soil and its thermal resistivity should be known before the size of the conductor is calculated.

The moisture content of the soil has a major effect on the current-carrying capacity of cables. In dry sections of the country, cables may have to be derated or other precautions taken to compensate for the increase in thermal resistance due to the lack of moisture. On the other hand, in ground which is continuously wet or under tidewater conditions, cables may safely carry higher than normal currents. Shielding for even 2400 V circuits is necessary for continuously wet or alternately wet and dry conditions. Where the cable passes from a dry area to a wet area, which provides natural shielding, there will be an abrupt voltage gradient stress, just as at the end of shielded cables terminated without a stress cone. Nonshielded cables specifically designed for this service are available. Alternate wet and dry conditions have also been found to accelerate the progress of water treeing in solid dielectric insulations.

Ampacities in the NEC tables take into account the grouping of adjacent circuits. For ambient temperatures different from those specified in the tables, more than three conductors in a cable or raceway, or other installation conditions, the derating factors to be applied are contained in Tables 310-16 through 310-19, “Notes to Ampacity Tables of 0 to 2000 V,” and “Notes to Tables 310-69 through 310-84.”

12.4.4 Emergency overload criteria

The normal loading limits of insulated wire and cable are based on many years of practical experience and represent a rate of deterioration that results in the most economical and useful life of such cable systems. The rate of deterioration is expected to result in a useful life of 20–30 years. The life of cable insulation is about halved, and the average rate of thermally caused service failures about doubled for each 5 °C to 15 °C increase in normal daily load temperature. Additionally, sustained operation over and above maximum rated operating temperatures or ampacities is not a very effective or economical expedient because the temperature rise is directly proportional to the conductor loss, which increases as the square of the current. The greater voltage drop might also increase the risks to equipment and service continuity.

Copyright The Institute of Electrical and Electronics Engineers, Inc.
Provided by IHS under license with IEEE
No reproduction or networking permitted without license from IHS
Not for Resale

As a practical guide, the Insulated Cable Engineers Association (ICEA) has established maximum emergency overload temperatures for various insulations. Operation at these emergency overload temperatures should not exceed 100 hours/year, and such 100 hour overload periods should not exceed five during the life of the cable. Table 12-5 provides uprating factors for short-time overloads for various types of insulated cables. The uprating factor, when multiplied by the nominal current rating for the cable in a particular installation, will give the emergency or overload current rating for the particular insulation.

A more detailed discussion on emergency overload and cable protection is contained in IEEE Std 242-1986, Chapter 11.

12.4.5 Voltage drop criteria

The supply conductor, if not of sufficient size, will cause excessive voltage drop in the circuit, and the drop will be in direct proportion to the circuit length. Proper starting and running of motors, lighting equipment, and other loads that have heavy inrush currents must be considered. The NEC recommends that the steady-state voltage drop in power, heating, or lighting feeders be no more than 3%, and the total drop including feeders and branch circuits be no more than 5% overall.

12.4.6 Fault current criteria

Under short-circuit conditions, the temperature of the conductor rises rapidly. Then, depending upon the thermal characteristics of the insulation, sheath, surrounding materials, etc., the conductor cools off slowly after the short-circuit condition is removed. For each insulation, the ICEA recommends a transient temperature limit for short-circuit duration times not in excess of 10 seconds.

Failure to check the conductor size for short-circuit heating could result in permanent damage to the cable insulation due to disintegration of the insulation material, which may be accompanied by smoke and generation of combustible vapors. These vapors will, if sufficiently heated, ignite, possibly starting a fire. Less seriously, the insulation or sheath of the cable may be expanded to produce voids leading to subsequent failure. This becomes especially important in cables rated 5 kV and higher.

In addition to the thermal stresses, mechanical stresses are set up in the cable through expansion when heated. As the heating is usually very rapid, these stresses may result in undesirable cable movement. However, on modern cables, reinforcing binders and sheaths considerably reduce the effect of such stresses. Within the range of temperatures expected with coordinated selection and application, the mechanical aspects can normally be discounted except with very old or lead sheathed cables.

During short-circuit or heavy pulsing currents, single-conductor cables will be subjected to forces that tend to either attract or repel the individual conductors with respect to each other. Therefore, cables installed in cable trays, racks, switchgear, motor control centers, or switchboard cable compartments, should be secured to prevent damage caused by such movements.

Copyright The Institute of Electrical and Electronics Engineers, Inc.
Provided by IHS under license with IEEE
No reproduction or networking permitted without license from IHS Not for Resale

Copyright The Institute of Electrical and Electronics Engineers, Inc.
Provided by IHS under license with IEEE
No reproduction or networking permitted without license from IHS
Not for Resale

Table 12-5—Operating for short-time overloads*

Insulation type	Voltage class (kV)	Conductor operating temperature (°C)	Conductor overload temperature (°C)	Uprating factors for ambient temperature							
				20 °C		30 °C		40 °C		50 °C	
				Cu	Al	Cu	Al	Cu	Al	Cu	Al
Paper (solid type)	9 29 49 69	95 90 80 65	115 110 100 80	1.09 1.10 1.12 1.13	1.09 1.10 1.12 1.13	1.11 1.12 1.15 1.17	1.11 1.12 1.15 1.17	1.13 1.15 1.19 1.23	1.13 1.15 1.19 1.23	1.17 1.19 1.25 1.38	1.17 1.19 1.25 1.38
Varnished cambric	5 15 28	85 77 70	100 85 72	1.09 1.05	1.08 1.05	1.10 1.07	1.10 1.07	1.13 1.09	1.13 1.09	1.17 1.13	1.17 1.13
Polyethylene (natural)	35	75	95	1.13	1.13	1.17	1.17	1.22	1.22	1.30	1.30
SBR rubber	0.6 5	75 90	95 105	1.13 1.08	1.13 1.08	1.17 1.09	1.17 1.09	1.22 1.11	1.22 1.11	1.30 1.14	1.30 1.14
Butyl RHH	15 35	85 80	100 95	1.09 1.09	1.08 1.09	1.10 1.11	1.10 1.11	1.13 1.14	1.13 1.14	1.17 1.20	1.17 1.20
Oil-base rubber	35	70	85	1.11	1.11	1.14	1.14	1.20	1.20	1.29	1.29
Polyethylene (cross-linked)	35	90	130	1.18	1.18	1.22	1.22	1.26	1.26	1.33	1.33
Silicone rubber	5	125	150	1.08	1.08	1.09	1.09	1.10	1.10	1.12	1.11
EPR rubber	35	90	130	1.18	1.18	1.22	1.22	1.26	1.26	1.33	1.33
Chlorosulfonated polyethylene†	0.6	75	95	1.13	1.13	1.17	1.17	1.22	1.22	1.30	1.30
Polyvinyl chloride	0.6 0.6	60 75	85 95	1.22 1.13	1.22 1.13	1.30 1.17	1.30 1.17	1.44 1.22	1.44 1.22	1.80 1.30	1.79 1.30

*To be applied to normal rating determined for such installation conditions.
†For example, Hypalon.

The minimum conductor size requirements for various rms short-circuit currents and clearing times are shown in table 12-6. The initial and final conductor temperatures from ICEA P-32-382 (1969), are shown for the various insulations. Table 12-3 provides conductor temperatures (maximum operating, maximum overload, and maximum short-circuit current) for various insulated cables.

The shield can be damaged if exposed to excessive fault currents. ICEA P-45-482 (1979) recommends that the ground-fault current not exceed 2000 A for 1/2 s. Some lighter duty shield constructions may have a lower current limit; check with the cable manufacturer. To limit ground-fault shield conductor exposure, the recommended practice is to utilize current-limiting overcurrent protective devices or employ low-resistance grounded supply systems for a maximum ground-fault current of 400 to 2000 A with suitably sensitive relaying. Without such limiting, it is likely that the occurrence of a ground fault could require replacement of substantial lengths of cable. Grounding of the shield at all splice and termination points will direct fault currents into multiple paths and reduce shield damage. A more detailed discussion of fault current and cable protection is contained in IEEE Std 242-1986.

12.4.7 Frequency criteria

In general, three-phase, 400 Hz power systems are designed in the same way as 60 Hz systems; however, the specifier must be aware that the higher frequency will increase the skin and proximity effects on the conductors, thereby increasing the effective copper resistance. For a given current, this increase in resistance results in increased heating and may require a larger conductor. The higher frequency will also increase the reactance, and this, combined with the increased resistance, will increase the voltage drop. The higher frequency will also increase the effect of magnetic materials upon cable reactance and heating. For this reason, the cables should not be installed in steel or magnetic conduit, steel wireway, or run along magnetic structural members within the building.

The curves in figure 12-7 show the ac/dc resistance ratio which exists on a 400 Hz system and the resulting reduction in current rating which is necessary from a heating standpoint to counteract the effect of the increased frequency.

The reactance can be taken as directly proportional to the frequency without introducing any appreciable errors. This method of determining reactance does not take into account the reduction due to proximity effect, but this change is not large and the error introduced by neglecting it is small.

The curves are applicable to any 600 V cable in the same nonmagnetic conduit, or to any Type MC cable with an aluminum or bronze sheath or interlocking armor.

When voltage drop is the limiting factor, then paralleling smaller conductors should be considered.

Copyright The Institute of Electrical and Electronics Engineers, Inc.
Provided by IHS under license with IEEE
No reproduction or networking permitted without license from IHS Not for Resale

Copyright The Institute of Electrical and Electronics Engineers, Inc.
Provided by IHS under license with IEEE
No reproduction or networking permitted without license from IHS
Not for Resale

Table 12-6—Minimum conductor sizes, in AWG or kcmil, for indicated fault current and clearing times

Total rms current (amperes)	Polyethylene and polyvinyl chloride, 75–150 °C				Oil base and SBR, 75–200 °C				Cross-linked polyethylene and EPR, 90–250 °C			
	1/2 cycle (0.0083 s)		10 cycles (0.166 s)		1/2 cycle (0.0083 s)		10 cycles (0.166 s)		1/2 cycle (0.0083 s)		10 cycles (0.166 s)	
	Cu	Al	Cu	Al	Cu	Al	Cu	Al	Cu	Al	Cu	Al
5000	10	8	4	2	10	8	4	3	12	10	4	3
15 000	6	4	2/0	4/0	6	4	1/0	3/0	6	4	1	3/0
25 000	3	2	4/0	350	4	2	3/0	250	4	3	3/0	250
50 000	1/0	2/0	400	700	1	2/0	350	500	2	1/0	300	500
75 000	2/0	4/0	600	1000	1/0	3/0	500	750	1/0	3/0	500	700
100 000	4/0	300	800	1250	3/0	250	700	1000	2/0	4/0	600	1000

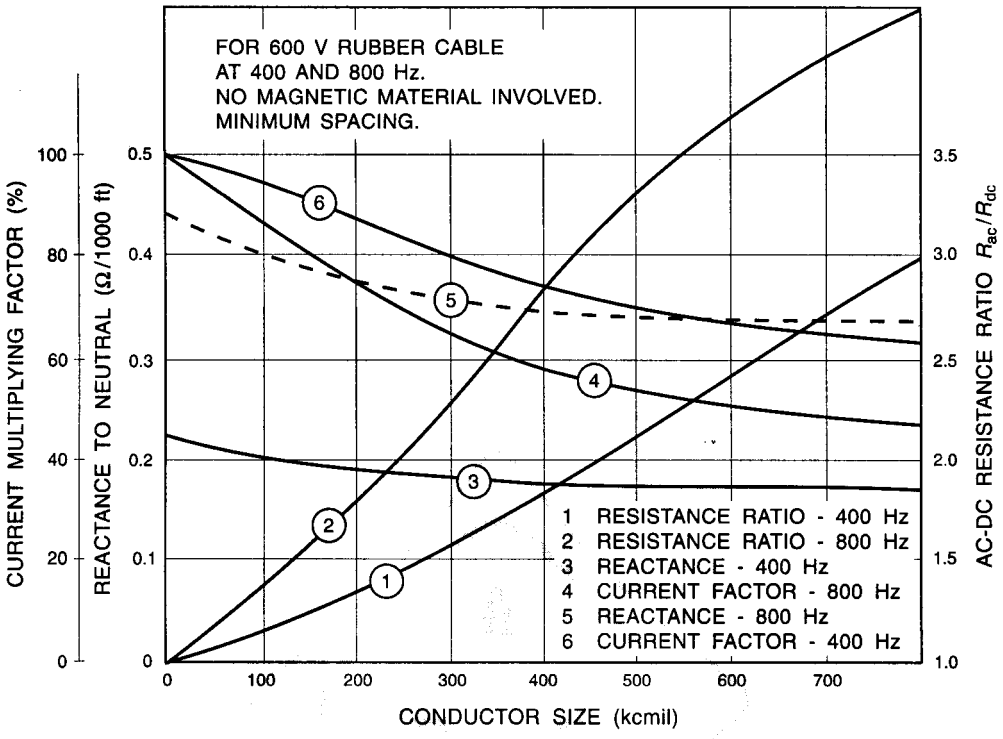

Figure 12-7—AC/DC resistance ratio on a 400 Hz system

12.4.8 Elevated ambient temperature

The ambient temperature of the area where cables are installed must be considered in determining the allowable ampacity of the circuit.

Cables and insulated conductors rated 2000 V or less, installed in areas where the ambient temperature is higher than that permitted in NEC Tables 310-16 through 310-19, must have the allowable ampacity reduced by the ampacity correction factors listed in appropriate table.

The ampacity of cables and insulated conductors rated over 2000 V, installed in areas where the ambient temperature is either higher or lower than the temperatures specified in NEC Tables 310-69 through 310-84, may be determined by using the formula contained in Note 1 of "Notes to Tables 310-69 through 310-84."

12.4.9 Hot-spot temperature criteria

The allowable ampacity of a cable or insulated conductor must be reduced whenever more than 6 ft of the run is in a higher ambient temperature area. Refer to 12.4.8 for the applicable correction factors.

Copyright The Institute of Electrical and Electronics Engineers, Inc.
Provided by IHS under license with IEEE
No reproduction or networking permitted without license from IHS
Not for Resale

12.4.10 Termination criteria

Equipment termination requirements must be considered; e.g., the manufacturer of a circuit breaker may specify a minimum conductor size for a particular breaker rating. Also, on 600 V terminations, the rating of the termination may require the cable to be operated at a lower temperature, 60 °C or 75 °C.

12.5 Installation

There are a variety of ways to install power distribution cables in industrial facilities. The engineer's responsibility is to select the method most suitable for each particular application. Each method has characteristics that make it more suitable for certain conditions than others; that is, each method will transmit power with a unique combination of reliability, safety, economy, and quality for a specific set of conditions. These conditions include the quantity and characteristics of the power being transmitted, the distance of transmission, and the degree of exposure to adverse mechanical and environmental conditions.

12.5.1 Layout

The first consideration in wiring systems layout is to keep the distance between the source and the load as short as possible. This consideration should be tempered by many other important factors to arrive at the lowest cost system that will operate within the reliability, safety, economy, and performance required. Some other factors that must be considered for various routings are the cost of additional cable and raceway versus the cost of additional supports; inherent mechanical protection provided in one alternative versus additional protection required in another; clearance for and from other facilities; and the need for future revision.

12.5.2 Open wire

This method was used extensively in the past. Although it has now been replaced in most applications, it is still quite often used for primary power distribution over large areas where conditions are suitable.

Open-wire construction consists of single conductors on insulators that are mounted on poles or structures. The conductors may be bare or have a covering or jacket for protection against corrosion or abrasion.

The attractive features of this method are its low initial cost and the fact that damage can be detected and repaired quickly. On the other hand, the noninsulated conductors are a safety hazard and are also very susceptible to mechanical damage and electrical outage from birds, animals, lightning, etc. There is an increased safety hazard where crane or boom truck use may be involved. In some areas, insulator contamination or conductor corrosion can result in increased maintenance costs.

Copyright The Institute of Electrical and Electronics Engineers, Inc.
Provided by IHS under license with IEEE
No reproduction or networking permitted without license from IHS
Not for Resale

Due to the large conductor spacing, open wire circuits have a higher reactance than circuits with more closely spaced conductors, producing a larger voltage drop. This problem is reduced by operating at a higher voltage and higher power factor.

Exposed open wire circuits are more susceptible to outages from lightning than other installation methods. The problem may be minimized through the use of overhead ground wires, surge arresters, or special insulators.

12.5.3 Aerial cable

Aerial cable is usually used for incoming or service distribution between commercial buildings. As a logical replacement for open wiring, it provides greater safety and reliability and requires less space. Properly protected cables are not a safety hazard and are not easily damaged by casual contact. They are, however, open to the same objections as open wire in regard to vertical and horizontal clearances. Aerial cables are frequently used in place of the more expensive conduit systems, where the mechanical protection of the conduit is not required. They are also generally more economical for long runs of one or two cables than are cable tray installations. It is cautioned that aerial cable having a portion of the run in conduit must be derated to the ampacity in conduit for this condition.

Aerial cables may be either self-supporting or messenger-supported. They may be attached to pole lines or structures. Self-supporting aerial cables have high tensile strength conductors for this application.

Multiple single conductors, Types MV, THW, RHH or RHW, both without outer braids; or multiconductor cables, Types MI, MC, SE, UF, TC, MV, or other factory-assembled multiconductor control, signal, or power cables that are identified for the use in NEC, Article 321, may be messenger-supported.

Cables may be messenger-supported either by spirally wrapping a steel band around the cables and the messenger or by pulling the cable into rings suspended from the messenger. The spiral wrap method is used for factory-assembled cable, while both methods are used for field assembly. A variety of spinning heads are available for application of the spiral wire banding in the field. The messenger used on factory-assembled messenger-supported wiring is required to be copper-covered steel or a combination of copper-covered steel and copper, and the assembly must be secured to the messenger by a flat copper binding strip. Single insulated conductors should be cabled together.

Factory-preassembled aerial cables are particularly susceptible to installation damage from high stress at support sheaves while being pulled in.

Self-supporting cable is suitable for only relatively short spans. Messenger-supported cable can span longer distances, depending on the weight of the cable and the tensile strength of the messenger. The supporting messenger provides the strength to withstand climatic rigors or mechanical shock. The messenger must be grounded in accordance with the NEC.

Copyright The Institute of Electrical and Electronics Engineers, Inc.
Provided by IHS under license with IEEE
No reproduction or networking permitted without license from IHS Not for Resale

A convenient feature available in one form of factory assembled aerial cable makes it possible to form a slack loop to connect a circuit tap without cutting the cable conductors. This is done by reversing the direction of spiral of the conductor cabling every 10–20 ft.

Spacer cable is an electric distribution line construction that consists of an assembly of one or more covered conductors separated from each other and supported from a messenger by insulating spacers. This is another economical means of transmitting power overhead between buildings. Available for use in three-phase 5–15 kV grounded or ungrounded systems, the insulated nonshielded phase conductors provide protection from accidental discharge through contact with ground level equipment, such as aerial ladders or crane booms. Uniform-line electrical characteristics are obtained through the balanced geometric positioning of the conductors with respect to each other by the use of plastic or ceramic spacers located at regular intervals along the line. Low terminating costs are obtained because the conductors are nonshielded.

12.5.4 Open runs

This is a low-cost method where adequate support surfaces are available between the source and the load. It is most useful in combination with other methods, such as branch runs from cable trays, and when adding new circuits to existing installations.

This method employs multiconductor cable attached to surfaces, such as structural beams and columns. Type MC cable is permitted to be installed in this manner in industrial facilities as well as power-limited control and telephone circuits. For architectural reasons in office buildings, it is usually limited to service areas, above hung ceilings, and electric shafts.

12.5.5 Cable tray

A cable tray is defined in the NEC as “a unit or assembly of units or sections, and associated fittings, forming a rigid structural system used to support cables and raceways.” These supports include ladders, troughs, and channels, and have become very popular in industrial electric systems for the following reasons: low installation cost, system flexibility, improved reliability, accessibility for repair or addition of cables, and space saving when compared with conduit where a larger number of circuits with common routing are involved.

Cable trays are available in a number of styles, materials, and mechanical load-carrying capabilities. Special coatings or materials for corrosion protection are available.

Initial planning of a cable tray should consider occupancy requirements as given in the NEC and also allow additional space for future system expansion.

Covers, either ventilated or nonventilated, may be used when additional mechanical protection is required or for additional electrical shielding when communication circuits are involved. Where cable trays are continuously covered for more than 6 ft with solid, unventilated covers, the cable ampacity rating must be derated as required by the NEC, Section 318.

--`,,`,,`-`-`,,`,,`,`,,`---
Copyright The Institute of Electrical and Electronics Engineers, Inc.
Provided by IHS under license with IEEE
No reproduction or networking permitted without license from IHS
Not for Resale

A solid fixed barrier is required for separation of cables rated over 600 V from those rated 600 V or less. Barrier strips are not required when the cables over 600 V are Type MC.

Seals or fire stops may be required when passing through walls, partitions, or elsewhere to minimize flame propagation.

In stacked tray installations, it is good practice to separate voltages, locating the lowest voltage cables in the bottom tray and increasingly higher voltage cables in ascending order of trays. In a multiphase system, all phase conductors should be installed closely grouped in the same tray.

A cable tray provides a convenient economical support method when more than three cables are being routed in the same direction. Single conductors of size 1/0 AWG and larger, that are identified for the use, are permitted in cable tray in industrial establishments. Type MC cable can be installed in cable tray and, when only one or two cables have to be routed to a separate location, the cable can then be installed as open runs of cable. Type TC cable, as well as single conductors, requires the use of a raceway between the cable tray and the termination point.

The steel or aluminum metal in a cable tray can also be used as an equipment grounding conductor when the tray sections are listed by a nationally recognized testing laboratory as having adequate cross-sectional area and are bonded using mechanical connectors or bonding jumpers. Refer to the NEC, Section 318-7, for complete requirements.

12.5.6 Cable bus

Cable bus is used for transmitting large amounts of power over relatively short distances. It is a more economical replacement of conduit or busway systems, but more expensive than cable tray. Cable bus is also more reliable, safer, and requires less maintenance than open- wire or bus systems.

Cable bus is a hybrid between cable tray and busway. It uses insulated conductors in an enclosure that is similar to cable tray with covers. The conductors are supported at maintained spacings by nonmetallic spacer blocks. Cable buses are furnished either as components for field assembly or as completely assembled sections. The use of completely assembled sections is recommended when the run is short enough that splices may be avoided. Multiple sections requiring joining may preferably employ the continuous conductors.

The conductors are generally spaced one cable diameter apart so that the rating in air may be attained. This spacing is also close enough to provide low reactance, resulting in minimum voltage drop.

12.5.7 Conduit

Among conduit systems, rigid steel provides the greatest degree of mechanical protection available in above-ground conduit systems. Unfortunately, this is also a relatively high cost

--`,,`,,`-`-`,,`,,`,`,,`---

Copyright The Institute of Electrical and Electronics Engineers, Inc.
Provided by IHS under license with IEEE
No reproduction or networking permitted without license from IHS Not for Resale

system. For this reason, it is being replaced, where possible, by other types of conduit and wiring systems. Where applicable, rigid aluminum, rigid nonmetallic conduit (NMC), electrical metallic tubing (EMT), intermediate metal conduit (IMC), electrical nonmetallic tubing (ENMT), and plastic, fiberglass, and cement ducts may be used. Cable trays and open runs of Type MC cable are also being utilized.

Conduit systems offer some degree of flexibility in permitting replacement of existing conductors with new ones. However, in case of fire or short-circuit current faults, it may be impossible to remove the conductors. In this case, it is necessary to replace both conduit and wire at great cost and delay. Also, during fires, conduits may transmit corrosive fumes into equipment where these gases can do a lot of damage. To keep flammable gases out of such areas, seals must be installed.

With magnetic conduits, an equal number of conductors of each phase must be installed in each conduit; otherwise, losses and heating will be excessive. For example, a single conductor should not be installed in steel conduit.

Refer to the NEC for regulations on conduit use.

Underground ducts are used where it is necessary to provide good mechanical protection. For example, when overhead conduits are subject to extreme mechanical abuse or when the cost of going underground is less than providing overhead supports. In the latter case, direct burial (without conduit) may be satisfactory under certain circumstances.

Underground ducts use rigid steel, plastic, or fiberglass conduits encased in concrete, or precast with multihole concrete duct banks with close fitting joints. When the added mechanical protection of concrete is not required, heavy wall versions of fiberglass conduits are direct buried as are rigid steel and plastic conduits. Medium-voltage, low-voltage, signal and communications systems should not be installed in the same manhole. Manholes intended for cable splices or for drain provisions on long length cables should have adequate provisions for grounding.

Cables used in underground conduits must be suitable for use in wet areas. Some cost savings can be realized by using flexible plastic conduits with factory installed conductors.

Where a relatively long distance between the point of service entrance into a building and the service entrance protective device is unavoidable, the requirements of the NEC, Section 230-6, apply. The conductors must be placed under at least 2 in of concrete beneath the building; or they must be placed in conduit or duct and enclosed by concrete or brick not less than 2 in thick. They are then considered outside the building.

12.5.8 Direct burial

Cables may be buried directly in the ground where permitted by the NEC when the need for future maintenance along the cable run is not anticipated nor the protection of conduit required. The cables used must be suitable for this purpose; that is, they must be resistant to moisture, crushing, soil contaminants, and insect and rodent damage. Direct buried cables

Copyright The Institute of Electrical and Electronics Engineers, Inc.
Provided by IHS under license with IEEE
No reproduction or networking permitted without license from IHS
Not for Resale

rated over 600 V must be shielded and provide an exterior ground path for personnel safety in the event of accidental dig-in. Multiconductor nonshielded Type MC cables rated up to 5000 V are also permitted to be direct buried. Refer to the NEC, Tables 300-5 and 710-3(b), for minimum depth requirements.

The cost savings of this method over duct banks can vary from very little to a considerable amount. Cable trenching or burying machines, when appropriate, can significantly reduce the installation cost of direct buried cable, particularly in open field construction, such as in industrial parks. While this system cannot readily be added to or maintained, the current-carrying capacity of a cable of a given size is usually greater than that for cables in ducts. Buried cable must have selected backfill for suitable heat dissipation. It should be used only when the chances of its being disturbed are minimal or it should be suitably protected. Relatively recent advances in the design and operating characteristics of cable fault location equipment and subsequent repair methods and material have diminished the maintenance mean time to repair.

12.5.9 Hazardous (classified) locations

Wire and cable installed in locations where fire or explosion hazards may exist must comply with the NEC, Articles 500 through 517. The authorized wiring methods are dependent upon the Class and Division of the specific area (see table 12-7). The wiring method must be approved for the *class* and *division*, but is not dependent upon the *group*, which defines the hazardous substance.

Equipment and the associated wiring system approved as intrinsically safe is permitted in any hazardous location for which it has been approved. However, the installation must prevent the passage of gases or vapors from one area to another. Intrinsically safe equipment and wiring is not capable of releasing sufficient electrical or thermal energy under normal or abnormal conditions to cause ignition of a specific flammable or combustible atmospheric mixture in its most easily ignitable concentration.

Seals must be provided in the wiring system to prevent the passage of the hazardous atmosphere along the wiring system from one division to another or from a Division I or II hazardous location to a nonhazardous location. The sealing requirements are defined in the NEC, Articles 501 through 503. The use of multiconductor cables with a gas/vaportight continuous outer sheath, either metallic or nonmetallic, can significantly reduce the sealing requirements in Class 1, Division 2 hazardous locations.

12.5.10 Installation procedures

Care must be taken in the installation of raceways to ensure that no sharp edges exist to cut or abrade the cable as it is pulled in. Another important consideration is to not exceed the maximum allowable tensile strength or the manufacturer's recommendation for the maximum sidewall pressure of a cable. These forces are directly related to the force exerted on the cable while it is being pulled in. The forces can be decreased by shortening the length of each pull and reducing the number of bends. The force required for pulling a given length can be

--`,,`,,`-`-`,,`,,`,`,,`---

Copyright The Institute of Electrical and Electronics Engineers, Inc.
Provided by IHS under license with IEEE
No reproduction or networking permitted without license from IHS Not for Resale

Table 12-7—Wiring methods for hazardous locations

Wiring method	Class I division		Class II division		Class III division
	1	2	1	2	1 or 2
Threaded rigid metal conduit	X	X	X	X	X
Threaded steel intermediate metal conduit	X	X	X	X	X
Rigid metal conduit				X	X
Intermediate metal conduit				X	X
Electrical metallic tubing				X	X
Rigid nonmetallic conduit					X
Type MI mineral insulated cable	X	X	X	X	X
Type MC metal-clad cable		X		X	X
Type SNM shielded nonmetallic cable		X		X	X
Type MV medium-voltage cable		X			
Type TC power and control tray cable		X			
Type PLTC power-limited tray cable		X			
Enclosed gasketed busways or wireways		X			
Dust-tight wireways				X	X

Source: Based on the NEC.

reduced by the application of a pulling compound on cables in conduit and the use of rollers in cable trays.

When the cable is to be pulled by the conductors, the maximum tension in pounds is limited to 0.008 times the area of the conductors, in circular mils, within the construction. The allowable tension should be reduced by 20–40% when several conductors are being pulled simultaneously since the tension is not always evenly distributed among the conductors. This allowable tension must be further reduced when the cable is pulled by a grip placed over the outer covering. A reasonable figure for most jacketed constructions would be 1000 lb per grip; but the calculated conductor tension should not be exceeded. Pulling eyes, connected to

Copyright The Institute of Electrical and Electronics Engineers, Inc.
Provided by IHS under license with IEEE
No reproduction or networking permitted without license from IHS
Not for Resale

each conductor, provide the maximum allowable pulling tension. Reusable pulling eyes are available.

Sidewall pressures on most single conductors limit pulling tensions to approximately 450 lb times the cable diameter (inches) times the radius of the bend (feet). Triplexed and paralleled cables would use their single conductor diameters and a factor of 225 lb and 675 lb, respectively, instead of the 450 lb factor for a single conductor.

For duct installations involving many bends, it is preferable to feed the cable into the end closest to the majority of the bends (since the friction through the longer duct portion without the bends is not yet a factor) and pull from the other end. Each bend gives a multiplying factor to the tension it sees; therefore, the shorter runs to the bends will keep this increase in pulling tensions to a minimum. However, it is best to calculate pulling tensions for installation from both ends of the run and install from the end requiring the least tension.

The minimum bending radii is 8 times the overall cable diameter for nonshielded single and multiconductor cables and 12 times for metal tape shielded or lead covered cables. The minimum bending radius for nonshielded Type MC cable with interlocking armor or a corrugated sheath is 7 times the overall diameter of the metallic sheath; for shielded cables, the minimum bending radius is 12 times the overall diameter of one of the individual conductors or 7 times the overall diameter of the multiconductor cable, whichever is greater. Type MC cable with a smooth metallic sheath requires a greater minimum bending radius; refer to the NEC, Section 334-11. The minimum bending radius is applicable to bends of even a fraction of an inch in length, not just the average of a long length being bent.

When installing cables in wet underground locations, the cable ends must be sealed to prevent entry of moisture into the conductor strands. These seals should be left intact or remade after pulling if disrupted, until splicing, terminating, or testing is to be done. This practice is recommended to avoid unnecessary corrosion of the conductors and to safeguard against entry of moisture into the conductor strands, which would generate steam under overload, emergency loadings, or short-circuit conditions after the cable is energized.

12.6 Connectors

12.6.1 Types available

Connectors are classified as thermal or pressure, depending upon the method used to attach them to the conductor.

Thermal connectors use heat to make soldered, silver soldered, brazed, welded, or cast-on terminals. Soldered connections have been used with copper conductors for many years, and their use is well understood. Aluminum connections may also be soldered satisfactorily with the proper materials and technique. However, soldered joints are not commonly used with aluminum. Shielded arc welding of aluminum terminals to aluminum cable makes a satisfactory termination for cable sizes larger than 4/0 AWG. Torch brazing and silver soldering of copper cable connections are in use, particularly for underground connections with bare con-

--`,,`,,`-`-`,,`,,`,`,,`---

Copyright The Institute of Electrical and Electronics Engineers, Inc.
Provided by IHS under license with IEEE
No reproduction or networking permitted without license from IHS Not for Resale

ductors such as in grounding mats. Exothermic welding kits utilizing carbon molds are also used for making connections with bare copper or bimetallic (copperweld) cable for ground mats and for junctions that will be below grade. These are satisfactory as long as the conductors to be joined are dry and the welding charge and tool are proper. The exothermic welding process has also proved satisfactory for attaching connectors to insulated power cables.

Mechanical and compression pressure connectors are used for making joints in electric conductors. Mechanical connectors obtain the pressure to attach the connector to the electric conductor from an integral screw, cone, or other mechanical parts. A mechanical connector thus applies force and distributes it suitably through the use of bolts or screws and properly designed sections. The bolt diameter and number of bolts are selected to produce the clamping and contact pressures required for the most satisfactory design. The sections are made heavy enough to carry rated current and withstand the mechanical operating conditions. These are frequently not satisfactory with aluminum, since only a portion of the strands are distorted by this connector.

Compression connectors are those in which the pressure to attach the connector to the electric conductor is applied externally, changing the size and shape of the connector and conductor.

The compression connector is basically a tube with the inside diameter slightly larger than the outer diameter of the conductor. The wall thickness of the tube is designed to carry the current, withstand the installation stresses, and withstand the mechanical stresses resulting from thermal expansion of the conductor. A joint is made by compressing the conductor and tube into another shape by means of a specially designed die and tool. The final shape may be indented, cup, hexagon, circular, or oval. All methods have in common the reduction in cross-sectional area by an amount sufficient to assure intimate and lasting contact between the connector and the conductor. Small connectors can be applied with a small hand tool. Larger connectors are applied with a hydraulic compression tool.

A properly crimped joint deforms the conductor strands sufficiently to have good electrical conductivity and mechanical strength, but not so much that the crimping action overcompresses the strands, thus weakening the joint.

Mechanical and compression connectors are available as tap connectors. Many connectors have an independent insulating cover. After a connection is made, the cover is assembled over the joint to insulate and, in some cases, to seal against the environment.

12.6.2 Connectors for aluminum

Aluminum conductors are different from copper in several ways, and these property differences should be considered in specifying and using connectors for aluminum conductors (see table 12-1). The normal oxide coating on aluminum has a relatively high electrical resistance. Aluminum has a coefficient of thermal expansion greater than copper. The ultimate and the yield strength properties and the resistance to creep of aluminum are different from the corresponding properties of copper. Corrosion is possible under some conditions because aluminum is anodic to other commonly used metals, including copper, when electrolytes even from humid air are present.

Copyright The Institute of Electrical and Electronics Engineers, Inc.
Provided by IHS under license with IEEE
No reproduction or networking permitted without license from IHS
Not for Resale

a) *Mechanical properties and resistance to creep*. Creep is commonly referred to as the continued deformation of the material under stress. The effect of excessive creep resulting from the use of an inadequate connector that applies excessive stress could be the relaxation of contact pressure within the connector, and a resulting deterioration and failure of the electric connection. In mechanical connectors for aluminum, as for copper, proper design can limit residual unit bearing loads to reasonable values, with a resulting minimum plastic deformation and creep subsequent to that initially experienced on installation. Connectors for aluminum wire can accommodate a range of conductor sizes, provided that the design takes into account the residual pressure on both minimum and maximum conductors.

b) *Oxide film*. The surface oxide film on aluminum, though very thin and quite brittle, has a high electrical resistance and, therefore, must be removed or penetrated to ensure a satisfactory electric joint. This film can be removed by abrading with a wire brush, steel wool, emery cloth, or similar abrasive tool or material. A plated surface, whether on the connector or bus, should never be abraded; it can be cleaned with a solvent or other means that will not remove the plating.

Some aluminum fittings are factory filled with a connection aid compound, usually containing particles that aid in obtaining low contact resistance. These compounds act to seal connections against oxidation and corrosion by preventing air and moisture from reaching contact surfaces. Connection to the inner strands of a conductor requires deformation of these strands in the presence of the sealing compound to prevent the formation of an oxide film.

c) *Thermal expansion*. The linear coefficient of thermal expansion of aluminum is greater than that of copper and is important in the design of connectors for aluminum conductors. Unless provided for in the design of the connector, the use of metals with coefficients of expansion less than that of aluminum can result in high stresses in the aluminum during heat cycles, causing additional plastic deformation and significant creep. Stresses can be significant, not only because of the differences of coefficients of expansion, but also because the connector may operate at an appreciably lower temperature than the conductor. This condition will be aggravated by the use of bolts that are of a dissimilar metal or have different thermal expansion characteristics from those of the terminal.

d) *Corrosion*. Direct corrosion from chemical agents affects aluminum no more severely than it does copper and, in most cases, less. However, since aluminum is more anodic than other common conductor metals, the opportunity exists for galvanic corrosion in the presence of moisture and a more cathodic metal. For this to occur, a wetted path must exist between external surfaces of the two metals in contact to set up an electric cell through the electrolyte (moisture), resulting in erosion of the more anodic of the two, in this instance, the aluminum.

Galvanic corrosion can be minimized by the proper use of a joint compound to keep moisture away from the points of contact between dissimilar metals. The use of relatively large aluminum anodic areas and masses minimizes the effects of galvanic cor-

Copyright The Institute of Electrical and Electronics Engineers, Inc.
Provided by IHS under license with IEEE
No reproduction or networking permitted without license from IHS Not for Resale

rosion. Plated aluminum connectors must be protected by taping or other sealing means.

e) *Types of connectors for aluminum conductors*. UL has listed connectors approved for use on aluminum that have successfully withstood UL performance tests as specified by ANSI/UL 486B-1990. Both mechanical and compression connectors are available. The most satisfactory connectors are specifically designed for aluminum conductors to prevent any possible troubles from creep, the presence of oxide film, and the differences of coefficients of expansion between aluminum and other metals. These connectors are usually satisfactory for use on copper conductors in noncorrosive locations. The connection of an aluminum connector to a copper or aluminum pad is similar to the connection of bus bars. When both the pad and the connector are plated and the connection is made indoors, few precautions are necessary. The contact surfaces should be clean; if not, a solvent should be used. Abrasive cleaners are undesirable since the plating may be removed. In normal application, steel, aluminum, or copper alloy bolts, nuts, and flat washers may be used. A light film of a joint compound is acceptable, but not mandatory. When either of the contact surfaces is not plated, the bare surface should be cleaned by wire brushing and then coated with a joint compound. Belleville washers are suggested for heavy duty applications where cold flow or creep may occur, or where bare contact surfaces are involved. Flat washers should be used wherever Belleville washers or other load concentrating elements are employed. The flat washer must be located between the aluminum lug, pad, or bolt and the outside edge of the Belleville washer with the neck or crown of the Belleville against the bolting nut to obtain satisfactory operation. In outdoor or corrosive atmosphere, the above applies with the additional requirement that the joint be protected. An unplated aluminum to aluminum connection can be protected by the liberal use of a nonoxide compound.

   In an aluminum to copper connection, a large aluminum volume compared to the copper is important as well as the placement of the aluminum above the copper. Again, coating with a joint compound is the minimum protection; painting with a zinc chromate primer or thoroughly sealing with a mastic or tape is even more desirable. Plated aluminum should be completely sealed against the elements.

f) *Welded aluminum terminals*. For aluminum cables 250 kcmil and larger, which carry large currents, excellent terminations can be made by welding special terminals to the cable. This is best done by the inert gas shielded metal arc method. The use of inert gas eliminates the need for any flux to be used in making the weld. The welded terminal is shorter than a compression terminal because the barrel for holding the cable can be very short. It has the advantage of requiring less room in junction or equipment terminal boxes. Another advantage is the reduced resistance of the connection. Each strand of the cable is bonded to the terminal, resulting in a continuous metal path for the current from every strand of the cable to the terminal.

   Welding of these terminals to the conductors may also be done by using the tungsten electrode type of ac welding equipment. The tungsten arc method is slower but, for small work, gives somewhat better control.

Copyright The Institute of Electrical and Electronics Engineers, Inc.
Provided by IHS under license with IEEE
No reproduction or networking permitted without license from IHS
Not for Resale

The tongues or pads of the welded terminals, such as the large compression connectors, are available with bolt holes to conform to NEMA FB 11-1983 and NEMA PR 4-1983 for terminals to be used on equipment.

g) *Procedure for Connecting Aluminum Conductors* (see figure 12-8)

1) When cutting cable, avoid nicking the strands. Nicking makes the cable subject to easy breakage [see figure 12-8(a)].

2) Contact surfaces should be cleaned. The abrasion of contact surfaces is helpful even with new surfaces, and is essential with weathered surfaces. Do not abrade plated surfaces [see figure 12-8(b)].

3) Apply joint compound to the conductor if the connector does not already have it [see figure 12-8(c)].

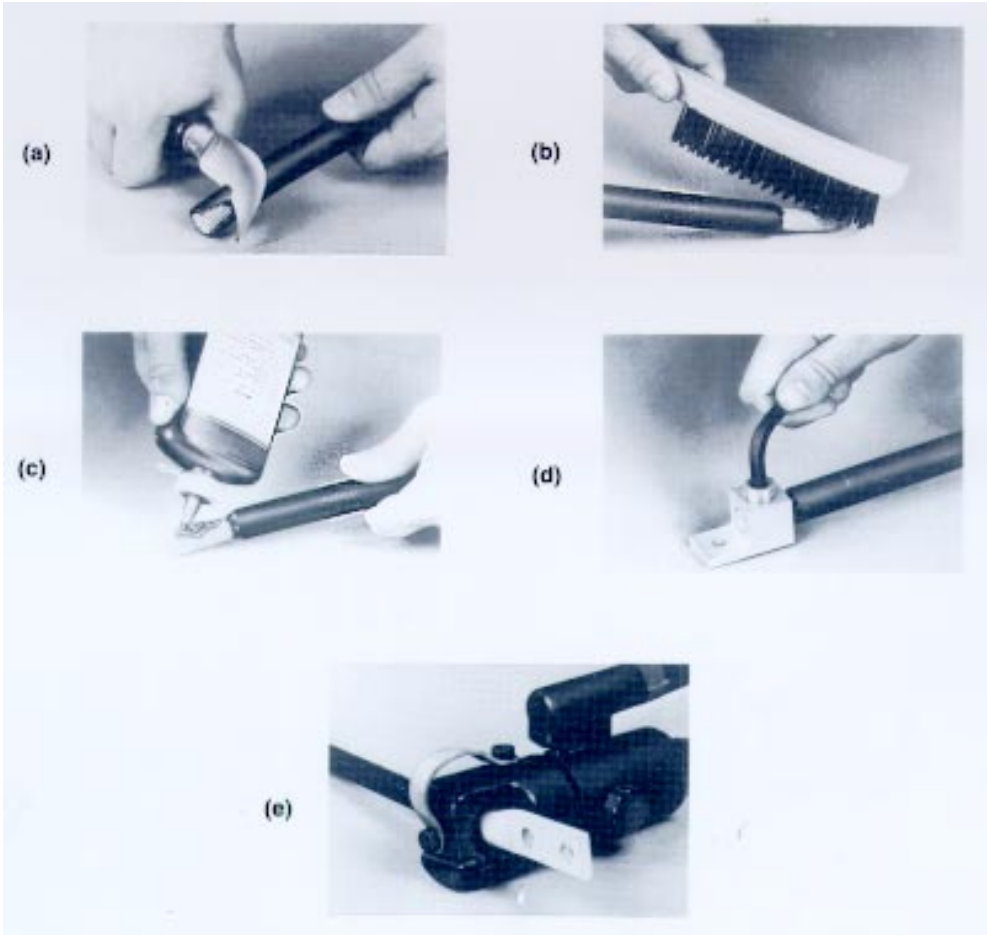

Figure 12-8—Procedures for connecting aluminum conductors

Copyright The Institute of Electrical and Electronics Engineers, Inc.
Provided by IHS under license with IEEE
No reproduction or networking permitted without license from IHS
Not for Resale

4) Use only connectors specifically tested and approved for use on aluminum conductors.
5) On mechanical connectors, tighten the connector with a screwdriver or wrench to the required torque. Remove excess compound [see figure 12-8(d)].
6) On compression connectors, crimp the connector using proper tool and die. Remove excess compound [see figure 12-8(e)].
7) Always use a joint compound compatible with the insulation and as recommended by the manufacturer. The oxide film penetrating or removing properties of some compounds aids in obtaining good initial conductivity. The corrosion inhibiting and sealing properties of some compounds help ensure the maintenance of continued good conductivity and prevention of corrosion.
8) When making an aluminum to copper connection that is exposed to moisture, place the aluminum conductor above the copper. This prevents soluble copper salts from reaching the aluminum conductor, which could result in corrosion. If there is no exposure to moisture, the relative position of the two metals is not important.
9) When using insulated conductors outdoors, extend the conductor insulation or covering as close to the connector as possible to minimize weathering of the joint. Outdoors, whenever possible, joints should be completely protected by tape or other means. When outdoor joints are covered or protected, the protection should completely exclude moisture, as the retention of moisture could lead to severe corrosion.

12.6.3 Connectors for cables of various voltage

Standard mechanical or compression connectors are recommended for all primary voltages provided the bus is noninsulated. Welded connectors may also be used for conductors sized in circular mils. Up to 600 V, standard connector designs present no problem for insulated or noninsulated conductors. The standard compression connectors are suitable for use on nonshielded conductors up to 5 kV. Above 5 kV and on shielded 5 kV conductors, stress considerations make it desirable to use tapered end compression connectors or semiconducting tape construction to provide the same effect.

12.6.4 Performance requirements

Electric connectors for industrial plants are designed to meet the requirements of the NEC. They are evaluated on the basis of their ability to pass secureness, heating, heat cycling, and pull-out tests as specified in ANSI/UL 486A-1991 and ANSI/UL 486B-1990. These standards were revised to incorporate more stringent requirements for aluminum terminating devices. The reader is cautioned to specify and use only those lugs meeting the requirements of current UL Standards.

12.6.5 Electrical and mechanical operating requirements

Electrically, the connectors must carry the current without exceeding the temperature rise of the conductors being joined. Joint resistance that is not appreciably greater than that of an equal length of conductor being joined is recommended to assure continuous and satisfactory

Copyright The Institute of Electrical and Electronics Engineers, Inc.
Provided by IHS under license with IEEE
No reproduction or networking permitted without license from IHS
Not for Resale

operation of the joint. In addition, the connector must be able to withstand momentary overloads or short circuit currents to the same degree as the conductor itself. Mechanically, a connector must be able to withstand the effects of the environment within which it is operating. When installed outdoors, it must withstand temperature extremes, wind, vibration, rain, ice, sleet, gases, chemical attack, etc. When used indoors, any vibration from rotating machinery, corrosion caused by plating or manufacturing processes, elevated temperatures from furnaces, etc., must not materially affect the performance of the joint.

12.7 Terminations

12.7.1 Purpose

A termination for an insulated power cable must provide certain basic electrical and mechanical functions. These essential requirements include the following:

a) Electrically connect the insulated cable conductor to electric equipment, bus, or non-insulated conductor.
b) Physically protect and support the end of the cable conductor, insulation, shielding system, and overall jacket, sheath, or armor of the cable.
c) Effectively control electrical stresses to provide both internal and external dielectric strength to meet desired insulation levels for the cable system.

The current carrying requirements are the controlling factors in the selection of the proper type and size of the connector or lug to be used. Variations in these components are related to the base material used for the conductor within the cable, the type of termination used, and the requirements of the electrical system.

The physical protection offered by the termination will vary considerably, depending on the requirements of the cable system, the environment, and the type of termination used. The termination must provide an insulating cover at the cable end to protect the cable components (conductor, insulation, and shielding system) from damage by any contaminants that may be present, including gases, moisture, and weathering.

Shielded medium voltage cables are subject to unusual electrical stresses where the cable shield system is ended just short of the point of termination. The creepage distance that must be provided between the end of the cable shield, which is at ground potential, and the cable conductor, which is at line potential, will vary with the magnitude of the voltage, the type of terminating device used, and, to some degree, the kind of cable used. The net result is the introduction of both radial and longitudinal voltage gradients that impose dielectric stress of varying magnitude at the end of the cable. The termination provides a means of reducing and controlling these stresses within the working limits of the cable insulation and the materials used in the terminating device.

12.7.2 Definitions

The definitions for cable terminations are contained in IEEE Std 48-1990.

Copyright The Institute of Electrical and Electronics Engineers, Inc.
Provided by IHS under license with IEEE
No reproduction or networking permitted without license from IHS Not for Resale

A Class 1 medium voltage cable termination, or more simply, a Class 1 termination, provides the following:

a) Some form of electric stress control for the cable insulation shield termination.
b) Complete external leakage insulation between the medium voltage conductor(s) and ground.
c) A seal to prevent the entrance of the external environment into the cable and to maintain the pressure, if any, within the cable system.

This classification encompasses what was formerly referred to as a *pothead*.

A Class 2 termination provides only items a and b: some form of electrical stress control for the cable insulation shield termination, and complete external leakage insulation, but no seal against external elements. Terminations within this classification would be stress cones with rain shields or special outdoor insulation added to give complete leakage insulation, and the newer slip-on terminations for cables having extruded insulation that do not provide a seal as in Class 1.

A Class 3 termination provides only item a: some form of electrical stress control for the cable insulation shield termination. This class of termination is used primarily indoors. Typically, this would include hand-wrapped stress cones (tapes or pennants) and the slip-on stress cones.

12.7.3 Cable terminations

The requirements imposed by the installation location dictate the termination design class. The least critical is an indoor installation within a building or inside a sealed protective housing. Here the termination is subjected to a minimum exposure to the elements, i.e., sunlight, moisture, and contamination. IEEE Std 48-1990 refers to what is now called a Class 3 termination, as an *indoor termination*.

Outdoor installations expose the termination to a broad range of elements and require that features be included in its construction to withstand this exposure. The present Class 1 termination defined in IEEE Std 48-1990 was previously called an *outdoor termination*. In some areas, the air can be expected to carry a significant amount of gaseous contaminants and liquid or solid particles that may be conducting, either alone or in the presence of moisture. These environments impose an even greater demand on the termination to protect the cable end, prevent damaging contaminants from entering the cable, and for the termination itself to withstand exposure to the contaminants. The termination may be required to perform its intended function while partially or fully immersed in a liquid or gaseous dielectric. These exposures impose upon the termination the necessity of complete compatibility between the liquids and exposed parts of the termination, including any gasket sealing materials. Cork gaskets have been used in the past, but the newer materials such as tetrafluoroethylene (TFE) and silicone provide superior gasketing characteristics. The gaseous dielectrics may be nitrogen or any of the electronegative gases, such as sulfur hexafluoride, that are used to fill electrical equipment.

Copyright The Institute of Electrical and Electronics Engineers, Inc.
Provided by IHS under license with IEEE
No reproduction or networking permitted without license from IHS
Not for Resale

12.7.3.1 Nonshielded cable

Cables have a copper or aluminum conductor with thermosetting or thermoplastic insulation and no shield. Terminations for these cables generally consist of a lug and may be taped. The lug is fastened to the cable by one of the methods described in 12.6, and tape is applied over the lower portion of the barrel of the lug and down onto the cable insulation. Tapes used for this purpose are selected on the basis of compatibility with the cable insulation and suitability for application in the environmental exposure anticipated.

12.7.3.2 Shielded cable

Cables rated over 2000 V have either a copper or aluminum conductor with an extruded solid dielectric insulation, such as ethylene propylene rubber (EPR) or cross-linked polyethylene (XLPE), or a laminated insulating system, such as oil-impregnated paper tapes or varnished cloth tapes. A shielding system must be used on solid dielectric cables rated 5 kV and higher unless the cable is specifically listed or approved for nonshielded use (see 12.2.4.4).

When terminating shielded cable, the shielding is terminated far enough back from the conductor to provide the necessary creepage distance between the conductor and the shield. This abrupt ending of the shield introduces longitudinal stress over the surface of the exposed cable insulation. The resultant combination of radial and longitudinal electric stress at the termination of the cable results in maximum stress occurring at this point. However, these stresses can be controlled and reduced to values within the safe working limits of the materials used for the termination. The most common method of reducing these stresses is to gradually increase the total thickness of insulation at the termination by adding, over the insulation, a premolded rubber cone or insulating tapes to form a cone. The cable shielding is carried up the cone surface and terminated at a point approximately 1/8 inch behind the largest diameter of the cone. A typical tape construction is illustrated in figure 12-9. This form is commonly referred to as a *stress cone* or *geometric stress cone*. This function can also be accomplished by using a high dielectric constant material, as compared to that of the cable insulation, either in tape form or premolded tube, applied over the insulation in this area. This method results in a low stress profile and is referred to as *capacitive stress control*.

It is advisable to consult individual manufacturers of cable, terminating, and splicing materials for their recommendations on terminating and splicing shielded cables.

12.7.3.3 Termination classes

A Class 1 termination is designed to handle the electrical functions as defined in 12.7.2. A Class 1 termination is used in areas that may have exposure to moisture or contaminants, or both. As pointed out in 12.7.3, the least severe requirements are those for a completely weather-protected area within a building or in a sealed protective housing. In this case, a track-resistant insulation, such as a silicone rubber tape or tube, would be used to provide the external leakage insulation function. The track-resistant surface would not necessarily need the skirts (fins or rain shields). The design of the termination to provide stress control and cable conductor seal can be the same for a weather protected, low contamination area as for a high contamination area. When a Class 1 termination is installed outdoors, the design of the

Copyright The Institute of Electrical and Electronics Engineers, Inc.
Provided by IHS under license with IEEE
No reproduction or networking permitted without license from IHS Not for Resale

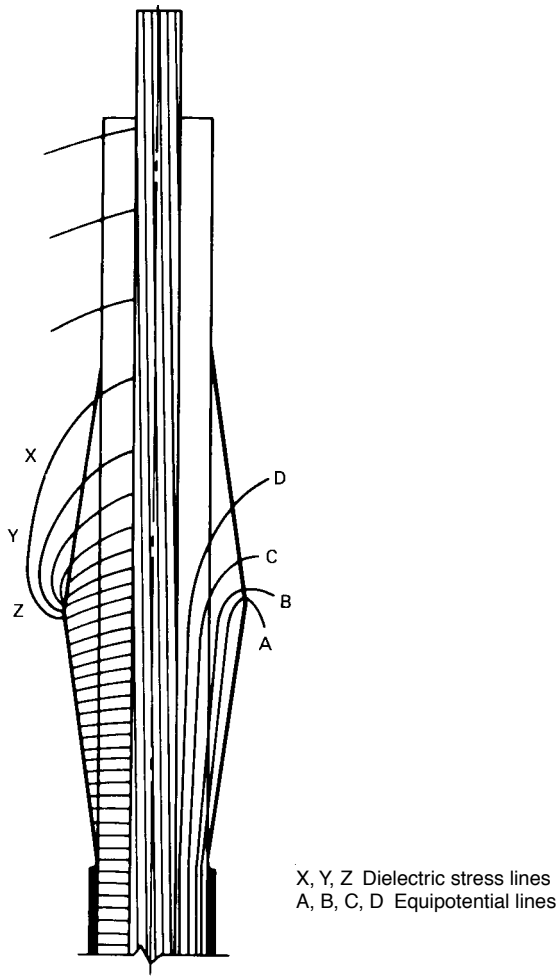

Figure 12-9—Stress cone

termination will vary according to the external leakage insulation function that will be in the form of silicone rubber, EPDM rubber, or porcelain insulation with rain shields. Of these forms, porcelain has the better resistance to long term exposure in highly contaminated areas and to electrical stress with arc tracking. Because of these features, they are usually chosen for coastal areas where the atmosphere is salty. The choice in other weather exposed areas is usually based on such factors as ease of installation, time of installation, overall long-term corrosion-resistance of components, device cost, and past history. Typical Class 1 terminations are shown in figures 12-10 and 12-11.

A Class 2 termination is different from a Class 1 termination only in that it does not seal the cable end to prevent entrance of the external environment into the cable or maintain the pressure, if any, within the cable. Therefore, a Class 2 termination should not be used where

Copyright The Institute of Electrical and Electronics Engineers, Inc.
Provided by IHS under license with IEEE
No reproduction or networking permitted without license from IHS
Not for Resale

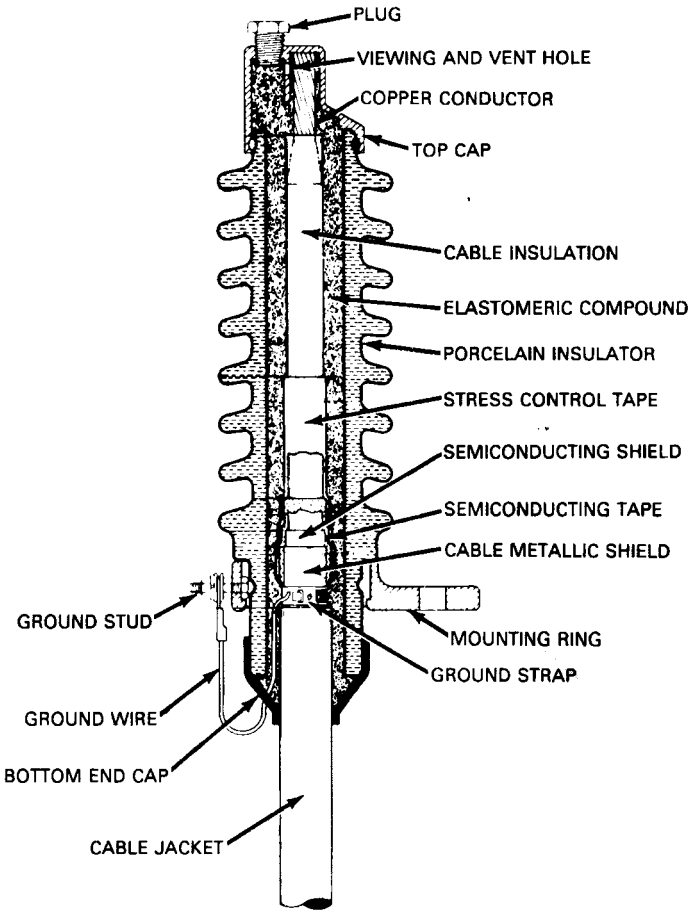

Figure 12-10—Typical Class 1 porcelain terminator (for solid dielectric cables)

moisture can enter into the cable. For a nonpressurized cable, typical of most industrial power cable systems using solid dielectric insulation, this seal is usually very easy to make. In the case of a poured porcelain terminator (commonly known as a *pothead*), the seal is normally built into the device. For a tape or slip-on terminator, the seal against external elements can be obtained by using tape (usually silicone rubber) to seal the conductor between the insulation and connector, assuming that the connector itself has a closed end.

The Class 3 termination only provides some form of stress control. Formerly known as an indoor termination, it is recommended for use only in weather protected areas. Before selecting a Class 3 termination, consideration should be given to the fact that, while it is not directly exposed to the elements, there is no guarantee of the complete absence of some moisture or contamination. As a result, the lack of external leakage insulation between the medium voltage conductor(s) and ground (or track resistant material), and the seal to prevent

Copyright The Institute of Electrical and Electronics Engineers, Inc.
Provided by IHS under license with IEEE
No reproduction or networking permitted without license from IHS
Not for Resale

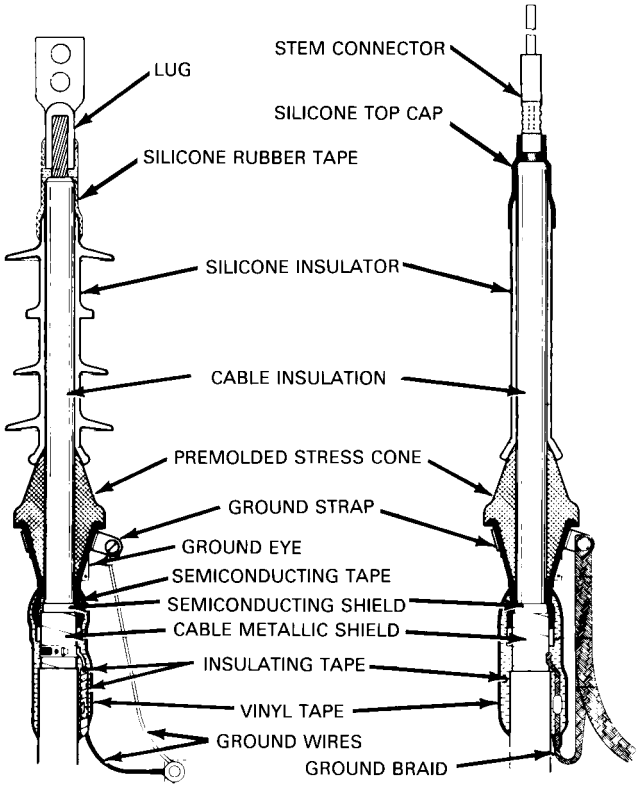

Figure 12-11—Typical Class 1 molded rubber terminators (for solid dielectric cables)

the moisture from entering the cable, can result in shortened life of the termination. In general, this practice should be avoided. A typical Class 3 termination is shown in figure 12-12.

12.7.3.4 Other termination design considerations

Termination methods and devices are available in ratings of 5 kV and above for either single conductor or three conductor installations and for indoor, outdoor, or liquid-immersed applications. Mounting variations include bracket, plate, flanged, and free hanging types.

Both cable construction and the application should be considered in the selection of a termination method or device. Voltage rating, desired basic impulse insulation level (BIL), conductor size, and current requirements are also considerations in the selection of the termination device or method. Cable construction is the controlling factor in the selection of the proper entrance sealing method and the stress-relief materials or filling compound.

Application, in turn, is the prime consideration for selecting the termination device or method, mounting requirements, and desired aerial connectors. Cable systems may be

Copyright The Institute of Electrical and Electronics Engineers, Inc.
Provided by IHS under license with IEEE
No reproduction or networking permitted without license from IHS
Not for Resale

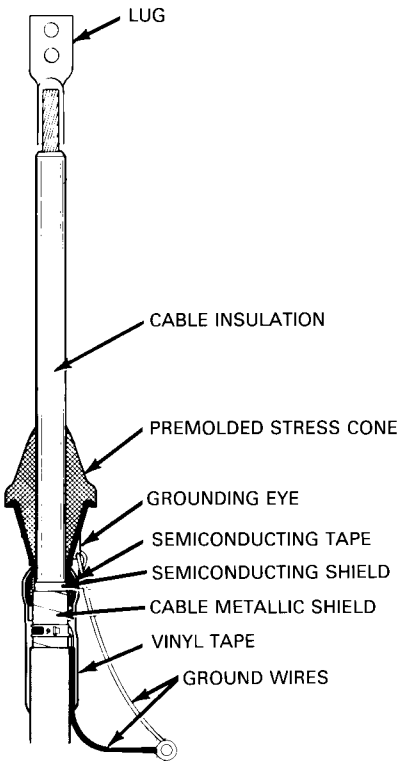

Figure 12-12—Typical Class 3 rubber terminator (for solid dielectric cable)

categorized into two general groups: nonpressurized and pressurized. Most power cable distribution systems are nonpressurized and utilize solid dielectric insulation.

12.7.3.5 Termination devices and methods

The termination hardware used on a pressurized cable system, which can also be used on a nonpressurized system, includes a hermetically sealed feature used to enclose and protect the cable end. A typical design consists of a metallic body with one or more porcelain insulators with fins (also called *skirts* or *rain shields*). The body is designed to accept a variety of optional cable entrance fittings, while the porcelain bushings, in turn, are designed to accommodate a number of cable sizes and aerial connections. These parts are assembled in the field onto the prepared cable ends, with stress cones required for shielded cables, and the assembled unit is filled with an insulating compound. Considerable skill is required for proper installation of this Class 1 termination, particularly in filling and cooling out, to avoid shrinkage and formation of voids in the fill material. Similar devices are available that incorporate high dielectric filling compounds, such as oil and thermosetting polyurethane resin, which do not require heating.

Copyright The Institute of Electrical and Electronics Engineers, Inc.
Provided by IHS under license with IEEE
No reproduction or networking permitted without license from IHS Not for Resale

Advances in terminations for single conductor cables include units designed to reduce the required cable end preparation, installation time, and eliminate the hot-fill-with-compound step. One termination, applicable only to solid dielectric cables, is offered with or without a metal porcelain housing and requires the elastomeric materials to be applied directly to the cable end. Another termination consists of a metal porcelain housing filled with a gelatin-like substance designed to be partially displaced as the termination is installed on the cable. This latter unit may be used on any compatible nonpressurized cable.

The advantages of the preassembled terminations include simplified installation procedures, reduced installation time, and consistency in the overall quality and integrity of the installed system.

Preassembled Class 1 terminations are available in ratings of 5 kV and above for most applications. The porcelain housings include flanged mounting arrangements for equipment mounting and liquid-immersed applications. Selection of preassembled termination devices is essentially the same as for poured compound devices with the exception that those units using solid elastomeric materials generally must be sized, with close tolerance, to the cable diameters to ensure proper fit.

Another category of termination devices incorporates preformed stress cones (figure 12-11). The most common preformed stress cone is a two-part elastomeric assembly consisting of a semiconducting lower section formed in the shape of a stress cone and an insulating upper section. With the addition of medium-voltage insulation protection from the stress cone to the termination lug (a track-resistant silicone tape or tube, or silicone insulators or fins for weather-exposed areas) and by sealing the end of the cable, the resultant termination is a Class 2 termination, for use in areas exposed to moisture and contamination, but not required to hold pressure.

Taped terminations, although generally more time-consuming to apply, are very versatile. Generally, taped terminations are used at 15 kV and below; however, there have been instances where they were used on cables up to 69 kV. On nonshielded cables, the termination is made with only a lug and a seal, usually tape. Termination of shielded cables requires the use of a stress cone and cover tapes in addition to the lug. The size and location of the stress cone is controlled primarily by the operating voltage and whether the termination is exposed or protected from the weather.

A creepage distance of 1 in/kV of nominal system voltage is commonly used for protected areas, and a 2–3 in distance allowed for exposed areas. Additional creepage distance may be gained by using a nonwetting insulation, fins, skirts, or rain hoods between the stress cone and conductor lug. For weather-exposed areas, this insulation is usually a track-resistant material, such as silicone rubber or porcelain.

Insulating tapes for the stress cone are selected to be compatible with the cable insulation, and tinned copper braid and semiconducting tape are used as conducting materials for the cone. A solid copper strap or solder-blocked braid should be used for the ground connection to prevent water wicking along the braid.

--`,,`,,`-`-`,,`,,`,`,,`---

Copyright The Institute of Electrical and Electronics Engineers, Inc.
Provided by IHS under license with IEEE
No reproduction or networking permitted without license from IHS
Not for Resale

Some of the newer terminations do not require a stress cone. They utilize a stress-relief or grading tape or tube. The stress-relief or grading tape or tube is then covered with another tape or a heat shrinkable tube for protection against the environment. The exterior tape or tube may also provide a track-resistant surface for greater protection in contaminated atmospheres.

12.7.4 Jacketed and armored cable connectors

Outer coverings for these cables may be nonmetallic, such as neoprene, polyethylene, or polyvinyl chloride, or metallic, such as lead, aluminum, or galvanized steel, or both, depending upon the installation environment. The latter two metallic coverings are generally furnished in an aluminum or galvanized steel tape helically applied and interlocked over the cable core or a continuously welded and corrugated aluminum sheath. The terminations available for use with these cables provide a means of securing the outer covering and may include conductor terminations. The techniques for applying them vary with the cable construction, voltage rating, and the requirements for the installation.

The outer covering of multiconductor cables must be secured at the point of termination using cable connectors approved both for the cable and the installation conditions.

Type MC metal clad cables with a continuously welded and corrugated sheath or an interlocking tape armor require, in addition to cable terminators, an arrangement to secure and ground the armor. Fittings available for this purpose are generally referred to as *armored cable connectors*. These armored cable connectors provide mechanical termination and electrically ground the armor. This is particularly important on the continuous corrugated aluminum sheath because the sheath is the grounding conductor. In addition, the connector may provide a watertight seal for the cable entrance to a box, compartment, pothead, or other piece of electrical equipment. These connectors are sized to fit the cable armor and are designed for use on the cable alone, with brackets or with locking nuts or adaptors for application to other pieces of equipment.

12.7.5 Separable insulated connectors

These are two-part devices used in conjunction with medium-voltage electrical apparatus. A bushing assembly is attached to the medium-voltage apparatus (transformer, switch, fusing device, etc.), and a molded plug-in connector is used to terminate the insulated cable and connect the cable system to the bushing. The dead front feature is obtained by fully shielding the plug-in connector assembly.

Two types of separable insulated connectors, for application at 15 kV and 25 kV, are available: load break and nonload break. Both utilize a molded construction design for use on solid dielectric insulated cables (rubber, cross-linked polyethylene, etc.) and are suitable for submersible applications. The connector section of the device has an elbow (90°) configuration to facilitate installation, improve separation, and save space. See IEEE Std 386-1985.

Electric apparatus may be furnished with only a universal bushing wall for future installation of bushings for either the load break or nonload break dead front assemblies. Shielded elbow

Copyright The Institute of Electrical and Electronics Engineers, Inc.
Provided by IHS under license with IEEE
No reproduction or networking permitted without license from IHS Not for Resale

connectors may be furnished with a voltage detection tap to provide a means of determining whether or not the circuit is energized.

12.7.6 Performance requirements

Design test criteria have been established for terminations in IEEE Std 48-1990, which specifies the short-time ac 60 Hz and impulse-withstand requirements. Also listed in this design standard are maximum dc field proof test voltages. Individual terminations may safely withstand higher test voltages, and the manufacturer should be contacted for such information. All devices employed to terminate insulated power cables should meet these basic requirements. Additional performance requirements may include thermal load cycle capabilities of the current-carrying components, the environmental performance of completed units, and the long-term overvoltage-withstand capabilities of the device.

12.8 Splicing devices and techniques

Splicing devices are subjected to a somewhat different set of voltage gradients and dielectric stress from that of a cable termination. In a splice, as in the cable itself, the greatest stresses are around the conductor and connector area and at the end of the shield. Splicing design must recognize this fundamental consideration and provide the means to control these stresses to values within the working limits of the materials used to make up the splice.

In addition, on shielded cables, the splice is in the direct line of the cable system and must be capable of handling any ground currents or fault currents that may pass through the cable shielding.

The connectors used to join the cable conductors together must be electrically capable of carrying the full-rated load, emergency overload, and fault currents without overheating, as well as being mechanically strong enough to prevent accidental conductor pullout or separation.

Finally, the splice housing or protective cover must provide adequate protection to the splice, giving full consideration to the nature of the application and its environmental exposure.

a) *600 V and below.* An insulating tape is applied over the conductor connection to electrically and physically seal the joint. The same taping technique is employed in the higher voltages, but with more refinement to cable end preparation and tape applications.

   Insulated connectors are used where several relatively large cables must be joined together. These terminators, called *moles* or *crabs*, are, fundamentally, insulated buses with a provision for making a number of tap connections that can be very easily taped or covered with an insulating sleeve. Connectors of this type enable a completely insulated multiple connection to be made without the skilled labor normally required for careful crotch taping or the expense of special junction boxes. One widely used connector is a preinsulated multiple joint in which the cable connections

Copyright The Institute of Electrical and Electronics Engineers, Inc.
Provided by IHS under license with IEEE
No reproduction or networking permitted without license from IHS
Not for Resale

are made mechanically by compression cones and clamping nuts. Another type is a more compact preinsulated multiple joint in which the cable connections are made by standard compression tooling that indents the conductor to the tubular cable sockets. Also available are tap connectors that accommodate a range of conductor sizes and have an independent insulating cover. After the connection is made, the cover is snapped closed to insulate the joint.

Insulated connectors lend themselves particularly well to underground services and industrial wiring where a large number of multiple connections must be made.

b) *Over 600 V.* Splicing of nonshielded cables up to 8 kV consists of assembling a connector, usually soldered or pressed onto the cable conductors, and applying insulating tapes to build up the insulation wall to a thickness of 1.5–2 times that of the original insulation on the cable. Care must be exercised in applying the connector and insulating tapes to the cables; but it is not as critical with nonshielded cables as with shielded cables.

Aluminum conductor cables require a moistureproof joint to prevent entry of moisture into the stranding of the aluminum conductors.

Splices on solid dielectric cables are made with uncured tapes, that will fuse together after application and provide a waterproof assembly. It is necessary, however, to use a moistureproof adhesive between the cable insulation and the first layer of insulating tapes. Additional protection may be obtained through the use of a moistureproof cover over the insulated splice. This cover may consist of additional moistureproof tapes and paint or a sealed weatherproof housing of some form.

12.8.1 Taped splices

Taped splices (see figure 12-13) for shielded cables have been used quite successfully for many years. Basic considerations are essentially the same as for nonshielded cables. Insulating tapes are selected not only on the basis of dielectric properties but also for compatibility with the cable insulation. The characteristics of the insulating tapes must also be suitable for the application of the splice. This latter consideration should include such details as providing a moisture seal for splices subjected to water immersion or direct burial, thermal stability of tapes for splices subjected to elevated ambient and operating temperatures, and ease of handling for applications of tapes on wye or tee splices.

Connector surfaces should be smooth and free from any sharp protrusions or edges. The connector ends are tapered, and indentations or distortion caused by pressing tools are filled and shaped to provide a round, smooth surface. Semiconducting tapes are recommended for covering the connector and the exposed conductor stranding to provide a uniform surface over which insulating tapes can be applied. Cables with a solid dielectric insulation are tapered, and those with a tape insulation are stepped to provide a gradual transition between the conductor/connector diameter and the cable insulation diameter prior to application of the insulating tapes. This is done to control the voltage gradients and resultant voltage stress to values within the working limits of the insulating materials. The splice should not be overinsulated

Copyright The Institute of Electrical and Electronics Engineers, Inc.
Provided by IHS under license with IEEE
No reproduction or networking permitted without license from IHS Not for Resale

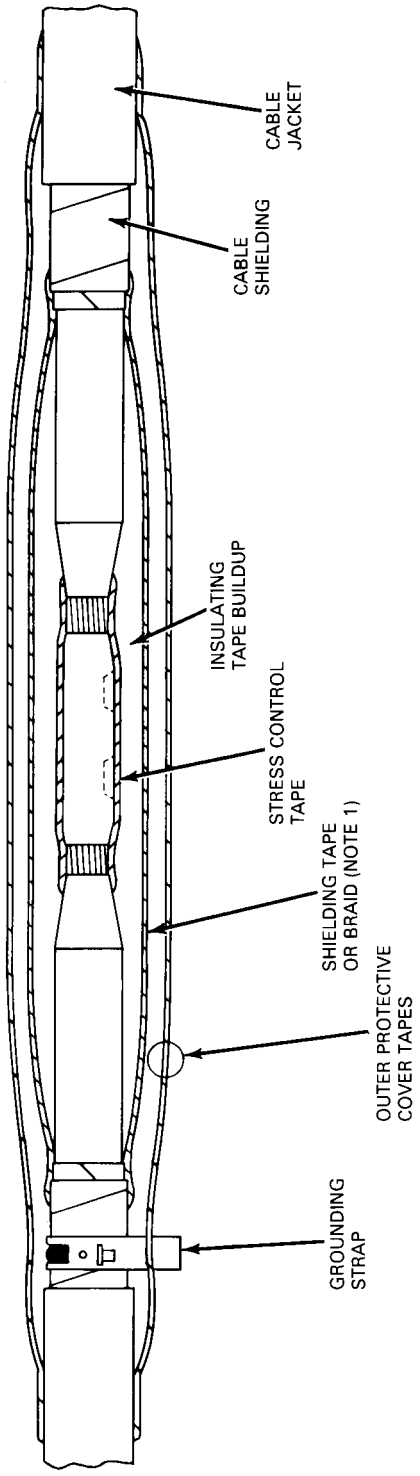

NOTES: (1) Heavy braid jumper or perforated strip should be used across splice to carry possible ground-fault current. Stress-control tape should cover strands completely, lapping slightly onto insulation taper.
(2) Consult individual cable supplier for recommended installation procedures and materials.

Figure 12-13—Typical taped splice in shielded cable

Copyright The Institute of Electrical and Electronics Engineers, Inc.
Provided by IHS under license with IEEE
No reproduction or networking permitted without license from IHS

Not for Resale

to provide additional protection since this could restrict heat dissipation at the splice area and risk splice failure.

A tinned or coated copper braid is used to continue the shielding function over the splice area. Grounding straps are applied to at least one end of the splice for grounding purposes, and a heavy braid jumper is applied across the splice to carry available ground fault current. Refer to 12.9.1 for single-point grounding to reduce sheath losses.

Final cover tapes or weather barriers are applied over the splice to seal it against moisture entry. A splice on a cable with a lead sheath is generally housed in a lead sleeve, that is solder wiped to the lead cable sheath at each end of the splice. These lead sleeves are filled with compound in much the same way as potheads.

Hand-taped splices may be made between lengths of dissimilar cables if proper precautions are taken to ensure the integrity of the insulating system of each cable and the tapes used are compatible with both cables. One example of this would be a splice between a rubber insulated cable and an oil-impregnated paper insulated cable. Such a splice must have an oil barrier to prevent the oil impregnate in the paper cable from coming in contact with the insulation on the rubber cable. In addition, the assembled splice should be made completely moistureproof. This requirement is usually accomplished by housing the splice in a lead sleeve with wiped joints at both ends. A close-fitting lead nipple is placed on the rubber cable and sealed to the jacket of the cable with tape or epoxy. The solder wipe is made to this lead sleeve.

Three-way wye and tee splices and the several other special hand-taped splices that can be made all require special design considerations. In addition, a high degree of skill on the part of the installer is a prime requirement for proper installation and service reliability.

12.8.2 Preassembled splices

Similar to the preassembled terminators, there are several variations of factory-made splices. The most basic is an elastomeric unit consisting of a molded housing sized to fit the cables involved, a connector for joining the conductors, and tape seals for sealing the ends of the molded housing to the cable jacket. Other versions of elastomeric units include an overall protective metallic housing that completely encloses the splice. These preassembled elastomeric splices are available in two and three way tees, and multiple configurations for applications up to 35 kV. They can be used on most cables having an extruded solid dielectric insulation.

The preassembled splice provides a moistureproof seal to the cable jacket and is suitable for submersible, direct burial, and other applications where the splice housing must provide protection for the splice to the same degree that the cable jacket provides protection to the cable insulation and shielding system. An advantage of these preassembled splices is the reduction in time required to complete the splice after cable end preparation. However, the solid elastomeric materials used for the splice are required to be sized, with close tolerance, to the cable diameters to ensure a proper fit.

--`,,`,,`-`-`,,`,,`,`,,`---

Copyright The Institute of Electrical and Electronics Engineers, Inc.
Provided by IHS under license with IEEE
No reproduction or networking permitted without license from IHS Not for Resale

12.9 Grounding of cable systems

For safety and reliable operation, the shields and metallic sheaths of power cables must be grounded. Without grounding, shields would operate at a potential considerably above ground. Thus, they would be hazardous to touch and would cause rapid degradation of the jacket or other material intervening between shield and ground. This is caused by the capacitive charging current of the cable insulation, that is on the order of 1 mA/ft of conductor length. This current normally flows, at power frequency, between the conductor and the earth electrode of the cable, normally the shield. In addition, the shield or metallic sheath provides a fault return path in the event of insulation failure, permitting rapid operation of the protection devices.

The grounding conductor and its attachment to the shield or metallic sheath, normally at a termination or splice, should have an ampacity no less than that of the shield. In the case of a lead sheath, the ampacity of the grounding conductor should be adequate to carry the available fault current without overheating, until it is interrupted. Attachment to the shield or sheath is frequently done with solder, which has a low melting point; thus an adequate area of attachment is required.

There is much disagreement as to whether the cable shield should be grounded at both ends or at only one end. If grounded at only one end, any possible fault current must traverse the length from the fault to the grounded end, imposing high current on the usually very light shield conductor. Such a current could readily damage or destroy the shield and require replacement of the entire cable rather than only the faulted section. With both ends grounded, the fault current would divide and flow to both ends, reducing the duty on the shield, with consequently less chance of damage. There are modifications to both systems. In one, single-ended grounding may be attained by insulating the shields at each splice or sectionalizing point and grounding only the source end of each section. This limits possible shield damage to only the faulted section. Multiple grounding, rather than just grounding at both ends, is simply the grounding of the cable shield or sheath at all access points, such as manholes or pull boxes. This also limits possible shield damage to only the faulted section.

12.9.1 Sheath losses

Currents are induced in the multigrounded shields and sheaths of cables by the current flowing in the power conductor. These currents increase with the separation of the power conductors and increase with decreasing shield or sheath resistance. This sheath current is negligible with three conductor cables, but with single conductor cables separated in direct burial or separate ducts, it can be appreciable. For example, with three single-conductor 500 kcmil cables laid parallel on 8 in centers with twenty spiral No. 16 AWG copper shield wires, the ampacity is reduced approximately 20% by this shield current. With single-conductor, lead-sheathed cables in separate ducts, this current is important enough that single-end grounding is mandatory. As an alternate, the shields are insulated at each splice (at approximately 500 ft intervals) and crossbonded to provide sheath transposition. This neutralizes the sheath currents, but still provides double-ended grounding. Of course, these sheaths and the bonding jumpers must be insulated; their voltage differential from ground may be in the 30–50 V

Copyright The Institute of Electrical and Electronics Engineers, Inc.
Provided by IHS under license with IEEE
No reproduction or networking permitted without license from IHS
Not for Resale

range. For details on calculating sheath losses in cable systems, consult the National Electrical Safety Code (NESC) (Accredited Standard Committee C2-1993).

Difficulties may arise from current attempting to flow via the cable shield, unrelated to cable-insulation failures. To prevent this, all points served by a multiple grounded shielded cable need to be interconnected with an ample grounding system. The insulation between shield sections at splices of single end grounded shield systems should have sufficient dielectric strength to withstand possible abnormal voltages as well. This system requires interconnecting grounding conductors of suitably low impedance that lightning, fault, and stray currents will follow this path rather than the cable shield. Cable shield ground connections should be made to this system, which should also be connected to the grounded element of the source supplying the energy to the cable. Duct runs, or direct burial routes, generally include a heavy grounding conductor to ensure such interconnection. For further details, refer to Chapter 7, as well as to IEEE Std 142-1991 and the NESC.

12.10 Protection from transient overvoltage

Cables rated up to 35 kV that are used in power distribution systems have insulation strengths well above that of other electrical equipment of similar voltage ratings. This is to compensate for installation handling and possibly a deterioration rate greater than for insulation that is exposed to less severe ambient conditions. This high insulation strength may or may not exist in splices or terminations, depending on their design and construction. Except for deteriorated points in the cable itself, the splices or terminations are most affected by overvoltages of lightning and switching transients. The terminations of cable systems not provided with surge protection may flashover due to switching transients. In this event, the cable would be subjected to possible wave reflections of even higher levels, possibly damaging the cable insulation; however, this is a remote possibility in medium-voltage cables.

Like other electric equipment, the means employed for protection from these overvoltages is usually surge arresters. These may be for protection of associated equipment as well as the cable. Distribution or intermediate class arresters are used, applied at the junctions of open wire lines and cables, and at terminals where switches may be open. Surge arresters are not required at intermediate positions along the cable run in contrast to open wire lines.

It is recommended that surge arresters be connected between the conductor and the cable shielding system with short leads to maximize the effectiveness of the arrester. Similarly recommended is the direct connection of the shields and arrester ground wires to a substantial grounding system to prevent surge current propagation through the shield.

Fully insulated aerial cables that are messenger supported and spacer cables are subject to direct lightning strokes, and a number of such cases are on record. The incidence rate is, however, rather low, and, in most cases, no protection is provided. Where, for reliability, such incidents must be guarded against, a grounded shield wire, similar to that used for bare aerial circuits, should be installed on the poles a few feet above the cable. Grounding conductors down the pole need to be carried past the cable messenger with a lateral offset of approximately 18 in to guard against side flashes from the direct strokes. Metal bayonets, when used

Copyright The Institute of Electrical and Electronics Engineers, Inc.
Provided by IHS under license with IEEE
No reproduction or networking permitted without license from IHS Not for Resale

to support the grounded shielding wire, should also be kept no less than 18 in clear of the cables or messengers.

12.11 Testing

12.11.1 Application and utility

Testing, particularly of elastomeric and plastic (solid) insulations, is a useful method of checking the ability of a cable to withstand service conditions for a reasonable future period. Failure to pass the test will either cause breakdown of the cable during test or otherwise indicate the need for its immediate replacement.

Whether or not to routinely test cables is a decision each user has to make. The following factors should be taken into consideration.

a) If there is no alternate source for the load supplied, testing should be done when the load equipment is not in operation.
b) The costs of possible service outages due to cable failures should be weighed against the cost of testing. With solid dielectric insulation, failures of cables in service may be reduced approximately 90% by dc maintenance testing.
c) Personnel with adequate technical capability should be available to do the testing, make observations, and evaluate the results.

The procedures discussed in this chapter are recommended practices, and many variations are possible. At the same time, variations made without a sound technical basis can negate the usefulness of the test or even damage equipment.

With solid dielectric cable (elastomeric and plastic), the principal failure mechanism results from progressive degradation due to ac corona cutting during service at the locations of manufacturing defects, installation damage, or accessory workmanship shortcomings. Initial tests reveal only gross damage, improper splicing or terminating, or cable imperfections. Subsequent use on ac usually causes progressive enlargement of such defects proportional to their severity.

Oil-impregnated paper (laminated) cable with a lead sheath (PILC) usually fails from water entrance at a perforation in the sheath, generally within 3 to 6 months after the perforation occurs. Periodic testing, unless very frequent, is therefore likely to miss many of these cases, making this testing method less effective with PILC cable.

Testing is not useful in detecting possible failure from moisture-induced tracking across termination surfaces, since this develops principally during periods of precipitation, condensation, or leakage failure of the enclosure or housing. However, terminals should be examined regularly for signs of tracking, and the condition corrected whenever detected.

--`,,`,,`-`-`,,`,,`,`,,`---

Copyright The Institute of Electrical and Electronics Engineers, Inc.
Provided by IHS under license with IEEE
No reproduction or networking permitted without license from IHS
Not for Resale

12.11.2 Alternating current versus direct current

Cable insulation can, without damage, sustain application of dc potential equal to the system basic impulse insulation level (BIL) for very long periods. In contrast, most cable insulations will sustain degradation from ac overpotential, proportional to the overvoltage, time of exposure, and the frequency of the applications. Therefore, it is desirable to utilize dc for any testing that will be repetitive. While the manufacturers use ac for the original factory test, it is almost universal practice to employ dc for any subsequent testing. All discussion of field testing hereafter applies to dc high voltage testing.

12.11.3 Factory tests

All cable is tested by the manufacturer before shipment, normally with ac voltage for a 5 min period. Nonshielded cable is immersed in water (ground) for this test; shielded cable is tested using the shield as the ground return. Test voltages are specified by the manufacturer, by the applicable UL or ICEA specification, or by other specifications such as those published by the Association of Edison Illuminating Companies (AEIC); refer to AEIC CS5-1987 and AEIC CS6-1987. In addition, a test may be made using dc voltage of two to three times the rms value used in the ac test. On cables rated over 2 kV, corona tests may also be made.

12.11.4 Field tests

As well as having no deteriorating effect on good insulation, dc high voltage is the most convenient to use for field testing since the test power sources or test sets are relatively light and portable. However, it should be recognized that correlation between dc test results and cable life expectancy has never been established.

The primary benefit of dc high voltage testing is to detect conducting particles left on the creepage surface during splicing or termination. Voltages for such testing should not be so high as to damage sound cable or component insulation but should be high enough to indicate incipient failure of unsound insulation that may fail in service before the next scheduled test.

Test voltages and intervals require coordination to attain suitable performance. One large industrial company with more than 25 years of cable testing experience has reached over 90% reduction of cable system service failures through the use of voltages specified by ICEA. These test voltages are applied at installation, after approximately 3 years of service, and every 5 to 6 years thereafter. The majority of test failures occur at the first two tests; test (or service) failures after 8 years of satisfactory service are less frequent. The importance of uninterrupted service should also influence the test frequency for specific cables. Tables 12-8 and 12-9 specify cable field test voltages.

The AEIC has specified test values for 1968 (see AEIC CS5-1987 and AEIC CS6-1987) and newer cables at approximately 20% higher than the ICEA values.

IEEE Std 400-1980 specifies much higher voltages than either the ICEA or the AEIC. These much more severe test voltages, as shown in table 12-10, are intended to reduce cable failures during operation by overstressing the cables during shutdown testing and causing weak

Copyright The Institute of Electrical and Electronics Engineers, Inc.
Provided by IHS under license with IEEE
No reproduction or networking permitted without license from IHS Not for Resale

Table 12-8—ICEA specified dc cable test voltages (kV), pre-1968 cable

Insulation type	Grounding	Maintenance test rated cable voltage			
		5 kV	15 kV	25 kV	35 kV
Elastomeric: butyl, oil base, EPR	Grounded	27	47	—	—
	Ungrounded	—	67	—	—
Polyethylene, including cross-linked polyethylene	Grounded	22	40	67	88
	Ungrounded	—	52	—	—

Table 12-9—ICEA specified dc cable test voltages (kV), 1968 and later cable*

Insulation type	Insulation level (%)	Rated cable voltage							
		5 kV		15 kV		25 kV		35 kV	
		1	2	1	2	1	2	1	2
Elastomeric: butyl and oil base	100	25	19	55	41	80	60	—	—
	133	25	19	65	49	—	—	—	—
Elastomeric: EPR	100	25	19	55	41	80	60	100	75
	133	25	19	65	49	100	75	—	—
Polyethylene, including cross-linked polyethylene	100	25	19	55	41	80	60	100	75
	133	25	19	65	49	100	75	—	—

NOTE—Columns 1: Installation tests, made after installation, before service; columns 2: maintenance tests, made after cable has been in service.

*These test values are lower than for pre-1968 cables because the insulation is thinner. Hence the ac test voltage is lower. The dc test voltage is specified as three times the ac test voltage, so it is also lower than for older cables.

cables to fail at that time. These test voltages should not be used without the concurrence of the cable manufacturer, otherwise the cable warranty will be voided.

Cables to be tested must have their ends free of equipment and clear from ground. All conductors not under test must be grounded. Since equipment to which cable is customarily connected may not withstand the test voltages allowable for cable, either the cable must be disconnected from this equipment, or the test voltage should be limited to levels that the

Copyright The Institute of Electrical and Electronics Engineers, Inc.
Provided by IHS under license with IEEE
No reproduction or networking permitted without license from IHS
Not for Resale

Table 12-10—IEEE Std 400-1980 specified dc cable test voltages (kV), installation and maintenance

L-L system voltage (kV)	BIL (kV)	Test voltage (kV)	
		100% insulation level	133% insulation level
2.5	60	40	50
5	75	50	65
8.7	95	65	85
15	110	75	100
23	150	105	140
28	170	120	—
34.5	200	140	—

NOTE—These test voltages should not be used without the cable manufacturers' concurrence as the cable warranty will be voided.

equipment can tolerate. The latter constitutes a relatively mild test on the cable condition, and the predominant leakage current measured is likely to be that of the attached equipment. Essentially, this tests the equipment, not the cable. It should also be recognized that some preassembled or premolded cable accessories may have a lower BIL than the cable itself, and this must be considered when establishing the test criteria.

In field testing, in contrast to the "go/no-go" nature of factory testing, the leakage current of the cable system must be closely watched and recorded for signs of approaching failure. The test voltage may be raised continuously and slowly from zero to the maximum value, or it may be raised in steps, pausing for 1 min or more at each step. Potential differences between steps are on the order of the ac rms rated voltage of the cable. As the voltage is raised, current will flow at a relatively high rate to charge the capacitance and, to a much lesser extent, to supply the dielectric absorption characteristics of the cable as well as to supply the leakage current. The capacitance charging current subsides within a second or so; the absorption current subsides much more slowly and will continue to decrease for 10 min or more, ultimately leaving only the leakage current flowing.

At each step, and for the 5–15 min duration of the maximum voltage, the current meter (normally a microammeter) is closely watched. Except when the voltage is first increased at each step, if the current starts to increase, slowly at first, then more rapidly, the last remnants of insulation at a weak point are failing, and total failure of the cable will occur shortly thereafter unless the voltage is reduced. This is characteristic of approximately 80% of all elastomeric insulation test failures.

Copyright The Institute of Electrical and Electronics Engineers, Inc.
Provided by IHS under license with IEEE
No reproduction or networking permitted without license from IHS Not for Resale

In contrast to this avalanche current increase to failure, sudden failure (flashover) can occur if the insulation is already completely or nearly punctured. In the latter case, voltage increases until it reaches the sparkover potential of the air gap length; then flashover occurs. Polyethylene cables exhibit this characteristic for all failure modes. Conducting leakage paths, such as at terminations or through the body of the insulation, exhibit a constant leakage resistance independent of time or voltage.

One advantage of step testing is that a 1 min absorption stabilized current may be read at the end of each voltage step. The calculated resistance of these steps may be compared as the test progresses to the next voltage step. At any step where the calculated leakage resistance decreases markedly (approximately 50% of that of the next lower voltage level), the cable could be near failure and the test should be discontinued short of failure as it may be desirable to retain the cable in serviceable condition until a replacement cable is available. On any test in which the cable will not withstand the prescribed test voltage for the full test period (usually 5 min) without current increase, the cable is considered to have failed the test and is subject to replacement as soon as possible.

The polarization index is the ratio of the current after 1 min to the current after 5 min of maximum test voltage and, on good cable, will be between 1.25 and 2. Anything less than 1 should be considered a failure and, between 1 and 1.25, only a marginal pass.

After completion of the 5 min maximum test voltage step, the supply voltage control dial should be returned to zero and the charge in the cable allowed to drain off through the leakage of the test set and voltmeter circuits. If this requires too long a time, a bleeder resistor of 1 MΩ per 10 kV of test potential can be added to the drainage path, discharging the circuit in a few seconds. After the remaining potential drops below 10% of the original value, the cable conductor may be solidly grounded. All conductors should be grounded when not on test, during the testing of other conductors, and for at least 30 min after the removal of the dc test potential. They may be touched only while the ground is connected to them; otherwise, the release of absorption current by the dielectric may again raise their potential to a dangerous level.

12.11.5 Procedure

Load is removed from the cables either by diverting the load to an alternate supply or by shutdown of the load served. The cables are de-energized by switching, tested to ensure voltage removal, grounded, and then disconnected from the attached switching equipment. (In case they are left connected, lower test potentials are required.) Surge arresters, potential transformers, and capacitors should also be disconnected.

All conductors and shields should be grounded. The test set is checked for operation and, after its power has been turned off, the test lead is attached to the conductor to be tested. At this time and not before, the ground should be removed from that conductor, and the bag or jar (see 12.11.6) applied over all of the terminals by covering all noninsulated parts at both ends of the run. The test voltage is then applied slowly, either continuously or in steps as outlined in 12.11.4. Upon completion of the maximum test voltage duration, the charge is drained off, the conductor grounded, and the test lead removed for connection to the next

Copyright The Institute of Electrical and Electronics Engineers, Inc.
Provided by IHS under license with IEEE
No reproduction or networking permitted without license from IHS
Not for Resale

conductor. This procedure is repeated for each conductor to be tested. Grounds should be left on each tested conductor for no less than 30 min.

12.11.6 DC corona and its suppression

Starting at approximately 10–15 kV and increasing at a high power of the incremental voltage, the air surrounding all bare conductor portions of the cable circuit becomes ionized from the test potential on the conductor and draws current from the conductor. This ionizing current indication is not separable from that of the normal leakage current and reduces the apparent leakage resistance value of the cable. Wind and other air currents tend to blow the ionized air away from the terminals, dissipating the space charge and allowing ionization of the new air, thus increasing what is known as the *direct corona current*.

Enclosing the bare portions of both end terminations in plastic bags, or in jars of plastic or glass, prevents the escape of this ionized air, thus it becomes a captive space charge. Once formed, it requires no further current, so the direct corona current disappears. Testing up to approximately 100 kV is possible with this treatment. Above 100 kV, larger bags or a small bag inside a larger one are required. In order to be effective, the bags must be blown up so that no part of the bag touches the conductor.

An alternate method to minimize corona is to completely tape all bare conductor surfaces with standard electrical insulating tape. This method is superior to the bag method for corona suppression, but it requires more time to adequately tape all the exposed ends.

12.11.7 Line voltage fluctuations

The very large capacitance of the cable circuit makes the microammeter extremely sensitive to even minor variations in the 120 V, 60 Hz supply to the test set. Normally, it is possible to read only average current values or the near steady current values. A low harmonic content, constant-voltage transformer improves this condition moderately. Complete isolation and stability are attainable only by use of a storage battery and 120 V, 60 Hz inverter to supply the test set.

12.11.8 Resistance evaluation

Medium-voltage cable exhibits extremely high insulation resistance, frequently many thousands of megohms. While insulation resistance alone is not a primary indication of the condition of the cable insulation, the comparison of the insulation resistances of the three-phase conductors is useful. On circuits less than 1000 ft long, a ratio in excess of 5:1 between any two conductors is indicative of some questionable condition. On longer circuits, a ratio of 3:1 should be regarded as a maximum. Comparison of insulation-resistance values with previous tests may be informative; but insulation resistance varies inversely with temperature, with winter insulation resistance measurements being much higher than those obtained under summer conditions. An abnormally low insulation-resistance is frequently indicative of a faulty splice, termination, or a weak spot in the insulation. Test voltages greater than standard values have been found practical in locating a weak spot by causing a test failure where the standard

--`,,`,,`-`-`,,`,,`,`,,`---

Copyright The Institute of Electrical and Electronics Engineers, Inc.
Provided by IHS under license with IEEE
No reproduction or networking permitted without license from IHS Not for Resale

voltage would not cause breakdown. Fault location methods may also be used to locate the failure.

12.11.9 Megohmmeter test

Since the insulation resistance of a sound medium-voltage cable circuit is generally in the order of thousands to hundreds of thousands of megohms, a megohmmeter test will reveal only grossly deteriorated insulation conditions of medium voltage cable. For low-voltage cable, however, the megohmmeter tester is quite useful and is probably the only practical test. Sound 600 V cable insulation will normally withstand 20 000 V or higher dc. Thus, a 1000 V or 2500 V megohmmeter is preferable to the lower 500 V testers for such cable testing.

For low-voltage cables, temperature-corrected comparisons of insulation resistances with other phases of the same circuit, with previous readings on the same conductor, and with other similar circuits are useful criteria for adequacy. Continued reduction in the insulation resistance of a cable over a period of several tests is indicative of degrading insulation; however, a megohmmeter will rarely initiate final breakdown of such insulation.

12.12 Locating cable faults

In electric power distribution systems, a wide variety of cable faults can occur. The problem may be in a communication circuit or in a power circuit, either in the low- or medium-voltage class. Circuit interruption may have resulted, or operation may continue with some objectionable characteristic. Regardless of the class of equipment involved or the type of fault, the one common problem is to determine the location of the fault so that repairs can be made.

The vast majority of cable faults encountered in an electric power distribution system occur between conductor and ground. Most fault-locating techniques are made with the circuit deenergized. In ungrounded or high-resistance grounded, low-voltage systems, however, the occurrence of a single line-to-ground fault will not result in automatic circuit interruption; therefore, the process of locating the fault may be carried out by special procedures with the circuit energized.

12.12.1 Influence of ground fault resistance

Once a line-to-ground fault has occurred, the resistance of the fault path can range from almost zero up to millions of ohms. The fault resistance has a bearing on the method used to locate the failure. In general, a low-resistance fault can be located more readily than one of high resistance. In some cases, the fault resistance can be reduced by the application of voltage sufficiently high to cause the fault to break down as the excessive current causes the insulation to carbonize. The equipment required to do this is quite large and expensive, and its success is dependent, to a large degree, on the insulation involved. Large users indicate that this method is useful with paper and elastomeric cables but generally of little use with thermoplastic insulation.

--`,,`,,`-`-`,,`,,`,`,,`---
Copyright The Institute of Electrical and Electronics Engineers, Inc.
Provided by IHS under license with IEEE
No reproduction or networking permitted without license from IHS
Not for Resale

The fault resistance that exists after the occurrence of the original fault depends on the cable insulation and construction, the location of the fault, and the cause of the failure. A fault that is immersed in water will generally exhibit a variable fault resistance and will not consistently arc over at a constant voltage. Damp faults behave in a similar manner until the moisture has been vaporized. In contrast, a dry fault will normally be much more stable and, consequently, can be more readily located.

For failures that have occurred in service, the method of system grounding and available fault current, as well as the speed of relay protection, will be influencing factors. Because of the greater carbonization and conductor vaporization, a fault resulting from an in-service failure can generally be expected to be of a lower resistance than one resulting from overpotential testing.

12.12.2 Equipment and methods

A wide variety of commercially available equipment and a number of different approaches can be used to locate cable faults. The safety considerations outlined in 12.11 should be observed.

The method used to locate a cable fault depends on the following:

a) Nature of fault
b) Type and voltage rating of cable
c) Value of rapid location of faults
d) Frequency of faults
e) Experience and capability of personnel

12.12.2.1 Physical evidence of the fault

Observation of a flash, a sound, or smoke accompanying the discharge of current through the faulted insulation will usually locate a fault. This is more probable with an overhead circuit than with underground construction. The discharge may be from the original fault or may be intentionally caused by the application of test voltages. The burned or disrupted appearance of the cable will also serve to indicate the faulted section.

12.12.2.2 Megohmmeter instrument test

When the fault resistance is sufficiently low that it can be detected with a megohmmeter, the cable can be sectionalized and each section tested to determine which contains the fault. This procedure may require that the cable be opened in a number of locations before the fault is isolated to one replaceable section. This could, therefore, involve considerable time and expense, and might result in additional splices. Since splices are often the weakest part of a cable circuit, this method of fault locating may introduce additional failures at a subsequent time.

Copyright The Institute of Electrical and Electronics Engineers, Inc.
Provided by IHS under license with IEEE
No reproduction or networking permitted without license from IHS Not for Resale

12.12.2.3 Conductor-resistance measurement

This method consists of measuring the resistance of the conductor from the test location to the point of fault by using either the Varley loop or the Murray loop test. Once the resistance of the conductor to the point of fault has been measured, it can be translated into distance by using handbook values of resistance per unit length for the size and conductor material involved, correcting for temperature as required. Both of these methods give good results that are independent of fault resistance, provided the fault resistance is low enough that sufficient current for readable galvanometer deflection can be produced with the available test voltage. Normally a low-voltage bridge is used for this resistance measurement. For distribution systems using cables insulated with organic materials, relatively low-resistance faults are normally encountered. The conductor-resistance measurement method has its major application on such systems. Loop tests on large conductor sizes may not be sensitive enough to narrow down the location of the fault.

High-voltage bridges are available for higher resistance faults but have the disadvantage of increased cost and size as well as requiring a high voltage dc power supply. High-voltage bridges are generally capable of locating faults with a resistance to ground of up to 1 or 2 MΩ, while a low-voltage bridge is limited to the application where the resistance is several kilohms or less.

12.12.2.4 Capacitor discharge

This method consists of applying a high-voltage and high-current impulse to the faulted cable. A high-voltage capacitor is charged by a relatively low-current capacity source such as that used for high-potential testing. The capacitor is then discharged across an air gap or by a timed closing contact into the cable. The repeated discharging of the capacitor provides a periodic pulsing of the faulted cable. The maximum impulse voltage should not exceed 50% of the allowable dc cable test voltage since voltage doubling can occur at open circuit ends. Where the cable is accessible, or the fault is located at an accessible position, the fault may be located simply by sound. Where the cable is not accessible, such as in duct or directly buried, the discharge at the fault may not be audible. In such cases, detectors are available to trace the signal to the location of the fault. The detector generally consists of a magnetic pickup coil, an amplifier, and a meter to display the relative magnitude and direction of the signal. The direction indication changes as the detector passes beyond the fault. Acoustic detectors are also employed, particularly in situations where no appreciable magnetic field external to the cable is generated by the tracing signal.

In applications where relatively high-resistance faults are anticipated, such as with solid dielectric cables or through compound in splices and terminations, the impulse method is the most practical method presently available and is the one most commonly used.

12.12.2.5 Tone signal

A tone signal may be used on energized circuits. A fixed-frequency signal, generally in the audio frequency range, is imposed on the faulted cable. The cable route is then traced by means of a detector, which consists of a pickup coil, receiver, and a head set or visual display,

Copyright The Institute of Electrical and Electronics Engineers, Inc.
Provided by IHS under license with IEEE
No reproduction or networking permitted without license from IHS
Not for Resale

to the point where the signal leaves the conductor and enters the ground return path. This class of equipment has its primary application in the low-voltage field and is frequently used for fault location on energized ungrounded circuits. On systems over 600 V, the use of a tone signal for fault location is generally unsatisfactory because of the relatively large capacitance of the cable circuit.

12.12.2.6 Radar system

A short-duration, low-energy pulse is imposed on the faulted cable and the time required for propagation to and return from the point of fault is monitored on an oscilloscope. The time is then translated into distance to locate the fault. Although this equipment has been available for a number of years, its major application in the power field has been on long-distance, high-voltage lines. In older test equipment, the propagation time is such that it cannot be displayed with good resolution for relatively short cables. However, recent equipment advances have largely overcome this deficiency. The major limitation to this method is its inability to adequately determine the difference between faults and splices on multitapped circuits. An important feature of this method is that it will locate an open in an otherwise unfaulted circuit.

12.12.3 Selection

The methods already listed represent some of the methods available to locate cable faults. They range from very simple to relatively complex. Some require no equipment, others require equipment that is inexpensive and can be used for other purposes, while still others require special equipment. As the complexity of the means used to locate a fault increases, so does the cost of the equipment as well as the training and experience required of those who are to use it.

In determining which approach is most practical for any particular facility, the size of the installation and the amount of circuit redundancy that it contains must be considered. The importance of minimizing the outage time of any particular circuit must be evaluated. The cable installation and maintenance practices and the number and time of anticipated faults will determine the expenditure for test equipment that can be justified. Equipment that requires considerable experience and operator interpretation for accurate results may be satisfactory for an application with frequent cable faults but ineffective where the number of faults is so small that adequate experience cannot be obtained. Because of these factors, many companies employ firms that offer the service of cable-fault locating. Such firms are usually located in large cities and cover a large area with mobile test equipment.

While the capacitor discharge method is most widely used, no single method of cable-fault location can be considered to be most suitable for all applications. The final decision on which method or methods to use depends upon evaluation of the advantages and disadvantages of each in relation to the particular circumstances of the facility in question. As a last resort, opening splices in manholes and testing the cable between manholes can be used to locate the faulted cable.

Copyright The Institute of Electrical and Electronics Engineers, Inc.
Provided by IHS under license with IEEE
No reproduction or networking permitted without license from IHS Not for Resale

12.13 Cable specification

Once the correct cable has been determined, it can be described in a cable specification. Cable specifications generally start with the conductor and progress radially through the insulation and coverings. The following is a check list that can be used in preparing a cable specification:

a) Number of conductors in cable, and phase identification required
b) Conductor size (AWG, kcmil) and material
c) Insulation (rubber, polyvinyl chloride, XLPE, EPR, etc.)
d) Voltage rating, and whether system requires 100%, 133%, or 173% insulation level
e) Shielding system, required on cable systems rated 8 kV and above and may be required on systems rated 2001–8000 V
f) Outer finishes
g) Installation approvals required (for use in cable tray, direct burial, messenger-supported, wet location, exposure to sunlight or oil, etc.)
h) Applicable UL listing
i) Test voltage and partial-discharge voltage
j) Ground-fault-current value and time duration
k) Cable accessories, if any, to be supplied by cable manufacturer

An alternate method of specifying cable is to furnish the ampacity of the circuit (amperes), the voltage (phase-to-phase, phase-to-ground, grounded, or ungrounded), and the frequency, along with any other pertinent system data. Also required is the installation method and the installation conditions (ambient temperature, load factor, etc.). For either method, the total number of linear feet of conductors required, the quantity desired shipped in one length, any requirement for pulling eyes, and whether it is desired to have several single-conductor cables paralleled on a reel should also be given.

12.14 References

The following references should be used in conjunction with this chapter:

Accredited Standards Committee C2-1993, National Electrical Safety Code.[2]

AEIC CS5-1987, Specifications for Thermoplastic and Cross-linked Polyethylene Insulated Shielded Power Cables Rated 5 Through 69 kV.[3]

AEIC CS6-1987, Specifications for Ethylene Propylene Rubber Insulated Shielded Power Cables Rated 5 kV Through 69 kV.

ANSI/NFPA 70-1993, National Electrical Code.[4]

---

[2]The National Electrical Safety Code (NESC) is available from the Institute of Electrical and Electronics Engineers, Service Center, 445 Hoes Lane, P.O. Box 1331, Piscataway, NJ 08855-1331, USA.

[3]AEIC publications are available from the Association of Edison Illuminating Companies, 600 N. 18th Street, P.O. Box 2641, Birmingham, AL 35291-0992, USA.

[4]NFPA publications are available from Publications Sales, National Fire Protection Association, 1 Batterymarch Park, P.O. Box 9101, Quincy, MA 02269-9101, USA.

Copyright The Institute of Electrical and Electronics Engineers, Inc.
Provided by IHS under license with IEEE
No reproduction or networking permitted without license from IHS
Not for Resale

ANSI/UL 486A-1991, Wire Connectors and Soldering Lugs for Use with Copper Conductors.[5]

ANSI/UL 486B-1990,Wire Connectors for Use with Aluminum Conductors.

ICEA P-32-382 (1969), Short-Circuit Characteristics of Insulated Cable.[6]

ICEA P-45-482 (1979), Short-Circuit Performance of Metallic Shields and Sheaths of Insulated Cables.

IEEE Std 48-1990, IEEE Standard Test Procedures and Requirements for High-Voltage Alternating-Current Cable Terminations (ANSI).[7]

IEEE S-135, IEEE/IPCEA Power Cable Ampacities.

IEEE Std 142-1991, IEEE Recommended Practice for Grounding of Industrial and Commercial Power Systems (IEEE Green Book) (ANSI).

IEEE Std 242-1986 (Reaff 1991), IEEE Recommended Practice for Protection and Coordination of Industrial and Commercial Power Systems (IEEE Buff Book) (ANSI).

IEEE Std 386-1985 (Reaff 1991), IEEE Standard for Separable Insulated Connectors for Power Distribution Systems Above 600 V (ANSI).

IEEE Std 400-1980 (Reaff 1987), IEEE Guide for Making High-Direct-Voltage Tests on Power Cable Systems in the Field (ANSI).

IEEE Std 515-1989, IEEE Recommended Practice for the Testing, Design, Installation, and Maintenance of Electrical Resistance Heat Tracing for Industrial Applications (ANSI).

IEEE Std 576-1989, IEEE Recommended Practice for Installation, Termination, and Testing of Insulated Power Cable as Used in the Petroleum and Chemical Industry.

NEMA FB 11-1983 (Reaff 1989), Plugs, Receptacles, and Connectors of the Pin and Sleeve Type for Hazardous Locations.[8]

NEMA PR 4-1983 (Reaff 1989), Plugs, Receptacles, and Connectors of the Pin and Sleeve Type for Industrial Use.

NEMA WC 3-1980 (Reaff 1986), Rubber-Insulated Wire and Cable for the Transmission and Distribution of Electrical Energy (ICEA S-19-81, Sixth Edition).

NEMA WC 5-1973 (Reaff 1979 and 1985), Thermoplastic-Insulated Wire and Cable for the Transmission and Distribution of Electrical Energy (ICEA S-61-402, Third Edition).

---

[5]UL publications are available from Underwriters Laboratories, Inc., 333 Pfingsten Road, Northbrook, IL 60062-2096, USA.

[6] ICEA publications are available from ICEA, P.O. Box 411, South Yarmouth, MA 02664.

[7]IEEE publications are available from the Institute of Electrical and Electronics Engineers, Service Center, 445 Hoes Lane, P.O. Box 1331, Piscataway, NJ 08855-1331, USA.

[8]NEMA publications are available from the National Electrical Manufacturers Association, 2101 L Street NW, Washington, DC 20037, USA.

Copyright The Institute of Electrical and Electronics Engineers, Inc.
Provided by IHS under license with IEEE
No reproduction or networking permitted without license from IHS Not for Resale

NEMA WC 7-1988, Cross-Linked-Thermosetting-Polyethylene-Insulated Wire and Cable for the Transmission and Distribution of Electrical Energy (ICEA S-66-524).

NEMA WC 8-1988, Ethylene-Propylene-Rubber-Insulated Wire and Cable for the Transmission and Distribution of Electrical Energy (ICEA S-68-516).

12.15 Bibliography

[B1] ANSI/UL 44-1991, Rubber-Insulated Wires and Cables.

[B2] ANSI/UL 62-1991, Flexible Cord and Fixture Wire.

[B3] ANSI/UL 83-1991, Thermoplastic-Insulated Wires and Cables.

[B4] ANSI/UL 493-1988, Thermoplastic-Insulated Underground Feeder and Branch-Circuit Cables.

[B5] ANSI/UL 854-1986, Service-Entrance Cables.

[B6] ANSI/UL 910-1990, Test Method for Fire and Smoke Characteristics of Electrical and Optical-Fiber Cables Used in Air-Handling Spaces.

[B7] ANSI/UL 1072-1988, Medium-Voltage Power Cables.

[B8] ANSI/UL 1277-1988, Electrical Power and Control Tray Cables With Optional Optical-Fiber Members.

[B9] ANSI/UL 1569-1992, Metal-Clad Cables.

[B10] ANSI/UL 1581-1991, Reference Standard for Electrical Wires, Cables, and Flexible Cords.

[B11] IEEE Std C37.95-1989, IEEE Guide for Protective Relaying of Utility-Consumer Interconnections (ANSI).

[B12] IEEE Std 100-1992, The New IEEE Standard Dictionary of Electrical and Electronics Terms (ANSI).

[B13] IEEE Std 120-1989, IEEE Master Test Guide for Electrical Measurements in Power Circuits.

[B14] IEEE Std 404-1986, IEEE Standard for Cable Joints for Use with Extruded Dielectric Cable Rated 5000 V through 46 000 V, and Cable Joints for Use with Laminated Dielectric Cable Rated 2500 V through 500 000 V (ANSI).

Copyright The Institute of Electrical and Electronics Engineers, Inc.
Provided by IHS under license with IEEE
No reproduction or networking permitted without license from IHS
Not for Resale

[B15] IEEE Std 446-1987, IEEE Recommended Practice for Emergency and Standby Power Systems for Industrial and Commercial Applications (IEEE Orange Book) (ANSI).

[B16] IEEE Std 525-1987, IEEE Guide for the Design and Installation of Cable Systems in Substations (ANSI).

[B17] IEEE Std 575-1988, IEEE Guide for the Application of Sheath-Bonding Methods for Single-Conductor Cables and the Calculation of Induced Voltages and Currents in Cable Sheaths (ANSI).

[B18] IEEE Std 592-1990, IEEE Standard for Exposed Semiconducting Shields on High-Voltage Joints and Separable Insulated Connectors.

[B19] IEEE Std 816-1987, IEEE Guide for Determining the Smoke Generation of Solid Materials Used for Insulations and Coverings of Electric Wire and Cable.

[B20] NEMA HP 100-1985, High Temperature Instrumentation and Control Cables.

[B21] NEMA HP 100.1-1985, High Temperature Instrumentation and Control Cables Insulated and Jacketed with FEP Fluorocarbons.

[B22] NEMA HP 100.2-1985, High Temperature Instrumentation and Control Cables Insulated and Jacketed with ETFE Fluoropolymers.

[B23] NEMA HP 100.3-1987, High Temperature Instrumentation and Control Cables Insulated and Jacketed with Cross-Linked (Thermoset) Polyolefin (XLPO).

[B24] NEMA HP 100.4-1985, High Temperature Instrumentation and Control Cables Insulated and Jacketed with ECTFE Fluoropolymers.

[B25] NEMA WC 50-1976 (Reaff 1982 and 1988), Ampacities, Including Effect of Shield Losses for Single-Conductor Solid-Dielectric Power Cable, 15 kV Through 69 kV (ICEA P-53-426, Second Edition).

[B26] NEMA WC 55-1986, Instrumentation Cables and Thermocouple Wire (ICEA S-82-552).

[B27] NEMA WC 57-1990, Standard for Control Cables (ICEA S-73-532).

[B28] UL 13-1990, Power-Limited Circuit Cables.

[B29] *Underground Systems Reference Book*, Chapter 10, New York: Association of Illuminating Companies, 1957.1

--`,,`,,`-`-`,,`,,`,`,,`---

Copyright The Institute of Electrical and Electronics Engineers, Inc.
Provided by IHS under license with IEEE
No reproduction or networking permitted without license from IHS Not for Resale

Chapter 13
Busways

13.1 Origin

Busways originated as a result of a request of the automotive industry in Detroit in the late 1920s for an overhead wiring system that would simplify electrical connections for electric motor-driven machines and permit a convenient arrangement of these machines in production lines. From this beginning, busways have grown to become an integral part of the low-voltage distribution system for industrial plants at 600 V and below.

Busways are particularly advantageous when numerous current taps are required. Plug-in devices with circuit breakers or fusible switches may be installed and wired without de-energizing the busway if so labelled by the manufacturer.

Power circuits over 600 A are usually more economical and require less space with busways than with conduit and wire. Busways may be dismantled and reinstalled in whole or in part to accommodate changes in the electrical distribution system layout.

13.2 Busway construction

Originally a busway consisted of bare copper conductors supported on inorganic insulators, such as porcelain, mounted within a nonventilated steel housing. This type of construction was adequate for the current ratings of 225–600 A then used. As the use of busways expanded and increased loads demanded higher current ratings, the housing was ventilated to provide better cooling at higher capacities. The bus bars were covered with insulation for safety and to permit closer spacing of bars of opposite polarity in order to achieve lower reactance and voltage drop.

In the late 1950s busways were introduced utilizing conduction for heat transfer by placing the insulated conductor in thermal contact with the enclosure. By utilizing conduction, current densities are achieved for totally enclosed busways that are comparable to those previously attained with ventilated busways. Totally enclosed busways of this type have the same current rating regardless of mounting position. Bus configuration may be a stack of one bus bar per phase (0–800 A), and higher ratings will use two (3000 A) or three stacks (5000 A). Each stack may contain all three phases, neutral, and grounding conductor to minimize circuit reactance. (See figure 13-1.)

Early busway designs required multiple nuts, bolts, and washers to electrically join adjacent sections. Present designs use a single bolt for each stack. Joint connection hardware is captive to the busway section when shipped from the factory. Installation labor is greatly reduced with corresponding savings in installation costs.

Copyright The Institute of Electrical and Electronics Engineers, Inc.
Provided by IHS under license with IEEE
No reproduction or networking permitted without license from IHS
Not for Resale

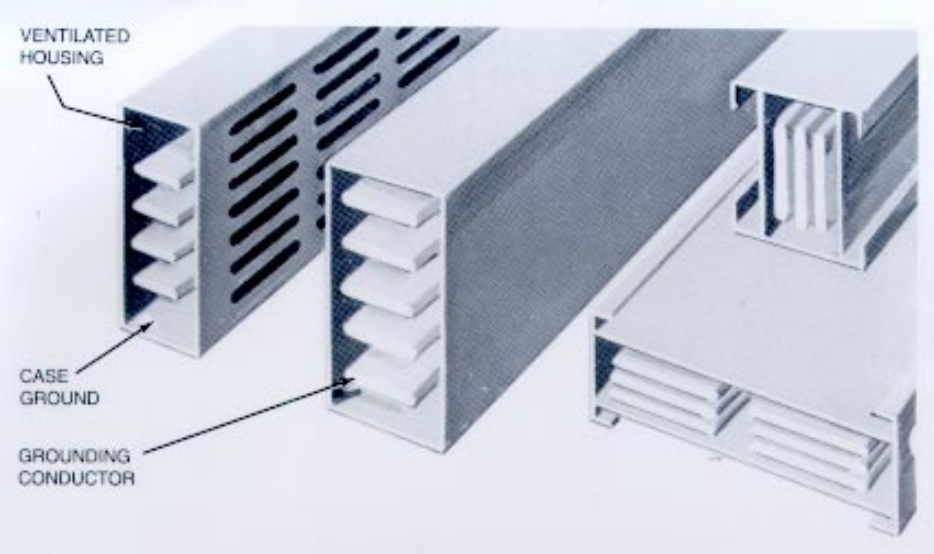

Figure 13-1—Typical busway construction

Busway conductors and current-carrying parts can be either copper or aluminum or copper alloy rated for the purpose. Compared to copper, electrical grade aluminum has lower conductivity (the minimum for aluminum is 55%; for copper, 97%) and less mechanical strength. Generally, for equal current-carrying ability, aluminum is lighter in weight and less costly.

To prevent oxides or insulating film on the surfaces, all contact locations on current-carrying parts are plated with tin or silver (the exception being copper conductors in lighting busways and trolley busways). Power and distribution busways use Belleville springs (concave washers) and bolting practices at the joints to maintain mechanical integrity.

Busway is usually manufactured in 10 ft sections. Since the busway must conform to the building structure, all possible combinations of elbows, tees, and crosses are available. Feed and tap fittings to other electric equipment, such as switchboards, transformers, motor-control centers, etc., are available. Plugs for plug-in busway use fusible switches and/or molded-case circuit breakers to protect the feeder or branch circuit. Neutral conductors may be supplied, if required.

Four types of busways are available, complete with fittings and accessories, providing a unified and continuous system of enclosed conductors (figure 13-2):

a) Feeder busway for low-impedance and minimum voltage drop for distribution of power as needed;
b) Plug-in busway for easy connection or rearrangement of loads;
c) Lighting busway to provide electric power and mechanical support for lighting or small loads;
d) Trolley busway for mobile power tapoffs to electric hoists, cranes, portable tools, etc.

Copyright The Institute of Electrical and Electronics Engineers, Inc.
Provided by IHS under license with IEEE
No reproduction or networking permitted without license from IHS Not for Resale

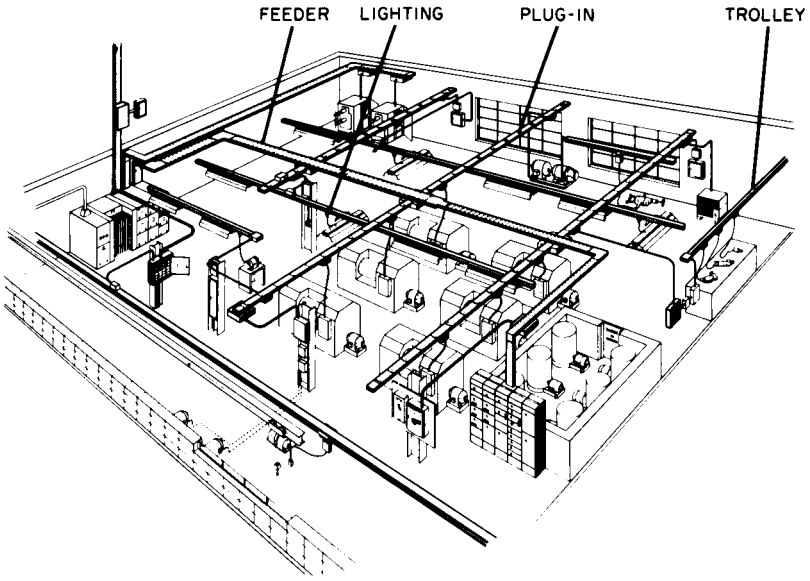

Figure 13-2—Illustration of versatility of busways, showing use of feeder, plug-in, lighting, and trolley types

13.3 Feeder busway

Feeder busway is used to transmit large blocks of power. It has a very low and balanced circuit reactance to minimize voltage drop and sustain voltage at the utilization equipment (figure 13-3).

Feeder busway is frequently used between the source of power, such as a distribution transformer or service drop, and the service entrance equipment. Industrial plants use feeder busway from the service equipment to supply large loads directly and to supply smaller current ratings of feeder and plug-in busway, which in turn supply loads through power take-offs or plug-in units.

Available current ratings range from 600–5000 A, 600 Vac or Vdc. By paralleling runs, higher ratings can be achieved. The manufacturer should be consulted for dc ratings. Feeder busway is available in single-phase and three-phase service with 50% and 100% neutral conductor. A grounding bus is available with all ratings and types. Available short-circuit current ratings are 42 000–200 000 A, symmetrical rms (see 13.8.2). The voltage drop of low-impedance feeder busway with the entire load at the end of the run ranges from 1–3 V/100 ft, line-to-line, depending upon the type of construction and the current rating (see 13.8.3).

Feeder busway is available in indoor and outdoor construction. Outdoor construction is designed so that exposure to the weather will not interfere with successful operation (see

Copyright The Institute of Electrical and Electronics Engineers, Inc.
Provided by IHS under license with IEEE
No reproduction or networking permitted without license from IHS
Not for Resale

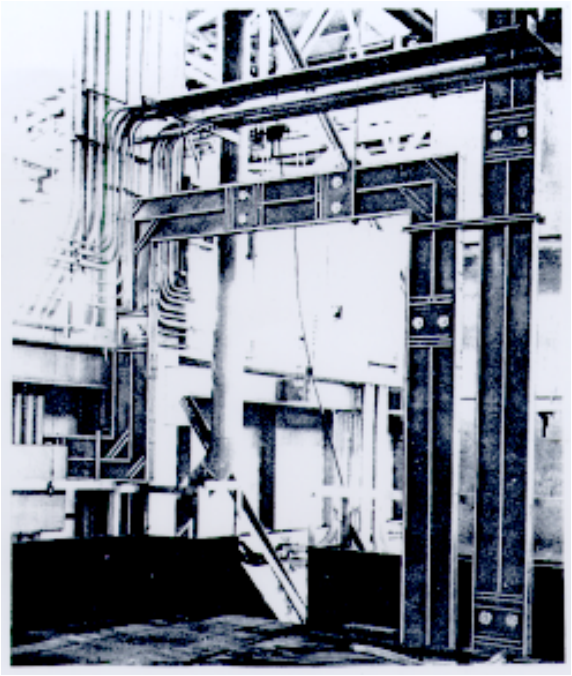

Figure 13-3—Feeder busway

NEMA BU 1-1988).[1] Outdoor busway also can be used for indoor applications where similar adverse conditions might prevail. No busway is suitable for immersion in water or to be solidly entrenched.

13.4 Plug-in busway

Plug-in busway is used in industrial plants as an overhead system to supply power to utilization equipment. Plug-in busway provides tapoff provisions at regular intervals (approximately every 2 ft) over the length of the run to allow safe connection of a switch or circuit breaker to the busway. Load side cable connections can then be short and direct.

Plug-in tapoffs (bus plugs) can be connected to their loads by conduit and wire or flexible bus drop cable. Bus plugs can be removed, relocated, and reused. The use of flexible cable permits the bus plug and machine it serves to be relocated and put back into service in a minimum of time (see figure 13-4).

[1]Information on references can be found in 13.13.

Copyright The Institute of Electrical and Electronics Engineers, Inc.
Provided by IHS under license with IEEE
No reproduction or networking permitted without license from IHS
Not for Resale

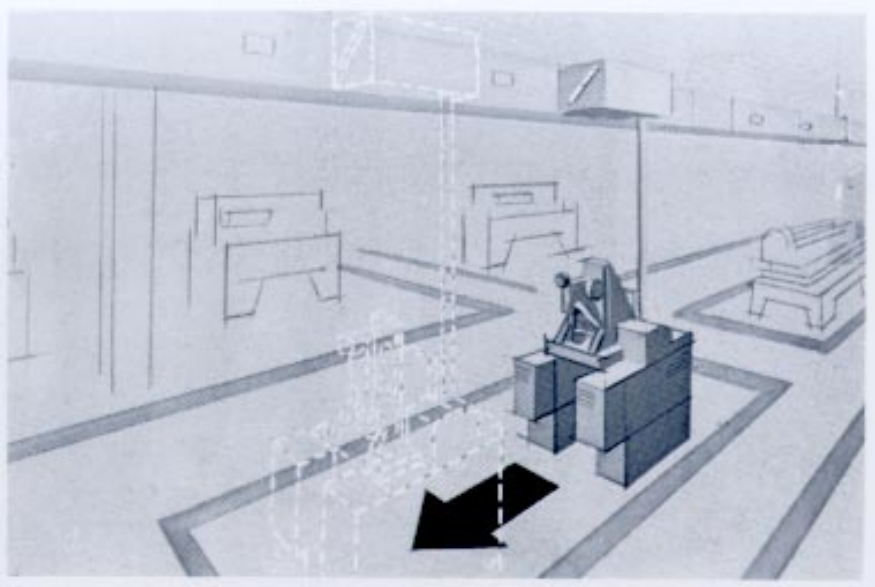

Figure 13-4—Machine installation using a busway feeder

Bus plugs are available in several types. They include fusible switches, circuit breakers, static voltage protectors (potentializer), ground detectors (indicating), combination motor starters and lighting contactors, transformers, and capacitor plugs. Many can be equipped with additional accessories, such as control power transformers, relays, indicating lights (blown fuse), and terminal blocks for remote control and indication.

Busway is totally enclosed and can be of the ventilated or non-ventilated design. Plug-in busways have current ratings ranging from 100–5000 A. Plug-in and feeder busway sections of the same manufacturers above 600 A are usually of compatible design and are interchangeable, allowing for a section of plug-in to be installed in a feeder run where tapoffs are desired. Bus plugs are generally limited to maximum ratings of 800 A for fused-switch type plugs and 1200 A for circuit-breaker type plugs.

Short-circuit current ratings vary from 10 000–200 000 A symmetrical rms (see 13.8.2). The voltage drop ranges are approximately from 1–3 V/100 ft, line-to-line, for evenly distributed loading. If the entire load is concentrated at the end of the run, these values double (see 13.8.3).

A neutral bar may be provided for single-phase loads such as lighting. Neutral bars usually are of the same capacity as the phase bars.

Copyright The Institute of Electrical and Electronics Engineers, Inc.
Provided by IHS under license with IEEE
No reproduction or networking permitted without license from IHS
Not for Resale

The bus housing may be used as an equipment grounding path. However, grounding bus bar is often added for greater system protection and coordination under ground fault conditions. The grounding bus bar provides a low-impedance ground path and reduces the possibility of arcing at the joint under high-level ground faults if the housing is used as a ground path. (See 13.8.2 for additional details.)

13.5 Lighting busway

Lighting busway is rated a maximum of 60 A, 300 V-to-ground, with two, three, or four conductors. It may be used on 480Y/277 V or 208Y/120 V systems and is specifically designed for use with fluorescent and high-intensity discharge lighting (figure 13-5).



Figure 13-5—Example of lighting busway

Tapoffs for lighting busway are available in various types and include those with built-in circuit protection by either fuse or circuit breaker. Accessories include special mounting brackets and tapoffs for surface or close coupling attachment of fluorescent lighting fixtures to the

Copyright The Institute of Electrical and Electronics Engineers, Inc.
Provided by IHS under license with IEEE
No reproduction or networking permitted without license from IHS Not for Resale

busway. Lighting busway can be surface-mounted, recessed in dropped ceilings, or suspended from drop rods. Hangers are available to accommodate each method.

Lighting busways provide power to the lighting fixture and also serve as the mechanical support for the fixture. Auxiliary supporting means called strength beams are available for increasing supporting intervals. The strength beams provide supports for the lighting busway as required by the National Electrical Code (NEC) (ANSI/NFPA 70-1993). Lighting busway is also used to provide power for light industrial applications.

13.6 Trolley busway

Trolley busway is constructed to receive stationary or movable take-off devices to power overhead cranes, monorail systems, industrial doors, and conveyor lines. Trolley busways are not suitable for outdoor application. They are used on a moving production line to supply electric power to a motor or a portable tool moving with a production line, or where operators move back and forth to perform their specific operations.

Trolley busway is available in current ratings ranging from 60–800 A, up to 600 V ac or dc, and 3, 4, and 5 wire. The steel casing serves as the ground. Tapoffs (moving trolleys) range from 15–200 A and can be equipped with circuit breakers, fusible protection, starters, contactors, and relays. Depending on manufacturer's recommendations, trolleys can support hanging loads of up to 30 lbs. Both horizontal and vertical curves are available, as well as isolation sections, end ramps, and switching sections.

13.7 Standards

Busways installation, application, and design conform to the following standards:

— ANSI/UL 857-1989
— NEMA BU 1-1988

ANSI/UL 857-1989 and NEMA BU1-1988 are primarily manufacturing and testing standards. The NEMA standard is generally an extension of the UL standard to areas that UL does not cover. The most important areas are busway physical parameters, resistance *R*, reactance *X*, and impedance *Z*, and short-circuit testing and rating.

Article 364 of the NEC deals primarily with criteria for busway installation. Some of its most important areas are as follows:

— Busway may be installed only where located in the open and visible. Installation behind panels is permitted if certain defined conditions are met. Refer to the NEC.
— Busway may not be installed where subject to physical damage, corrosive vapors, or in hoistways.
— When specifically approved for the purpose, busway may be installed in a hazardous (classified) location, outdoors, or in wet or damp locations.

Copyright The Institute of Electrical and Electronics Engineers, Inc.
Provided by IHS under license with IEEE
No reproduction or networking permitted without license from IHS
Not for Resale

— Busway must be supported at intervals not to exceed 5 ft unless otherwise approved. Where specifically approved for the purpose, horizontal busway may be supported at intervals up to 10 ft, and vertical busway may be supported at intervals up to 16 ft.

— Busway must be totally enclosed (nonventilated) where passing through floors and for a minimum distance of 6 ft above the floor to provide adequate protection from physical damage. It may extend through walls if joints are outside the walls.

State and local electrical codes may have specific requirements over and above ANSI/UL 857-1989 and the NEC. Appropriate code authorities and manufacturers should be contacted to ensure that requirements are met.

13.8 Selection and application of busways

To apply busways properly in an electric power distribution system, some of the more important items to consider are the following.

13.8.1 Current-carrying capacity

Busways should be rated on a temperature-rise basis to provide safe operation, long life, and reliable service.

Conductor size (cross-sectional area) should not be used as the sole criterion for specifying busway. Busway may have seemingly adequate cross-sectional area and yet have a dangerously high temperature rise. The UL requirement for temperature rise (55 °C) (see ANSI/UL 857-1989) should be used to specify the maximum temperature rise permitted. Larger cross-sectional areas can be used to provide lower voltage drop and temperature rise.

Although the temperature rise will not vary significantly with changes in ambient temperature, it may be a significant factor in the life of the busway. The limiting factor in most busway designs is the insulation life, and there is a wide range of types of insulating materials used by various manufacturers. If the ambient temperature exceeds 40 °C or a total temperature in excess of 95 °C is expected, then the manufacturer should be consulted.

13.8.2 Short-circuit current rating

The bus bars in busways may be subject to electromagnetic forces of considerable magnitude by a short-circuit current. The generated force per unit length of bus bar is directly proportional to the square of the short-circuit current and is inversely proportional to the spacing between bus bars. Short-circuit current ratings are generally assigned in accordance with ANSI/NEMA BU1-1988 and tested in accordance with ANSI/UL 857-1989. The ratings are based on (1) the use of an adequately rated protective device ahead of the busway that will clear the short circuit in 3 cycles and (2) application in a system with short-circuit power factor not less than that given in table 13-1.

Copyright The Institute of Electrical and Electronics Engineers, Inc.
Provided by IHS under license with IEEE
No reproduction or networking permitted without license from IHS Not for Resale

Table 13-1—Busway ratings as a function of short-circuit power factor

Busway rating (symmetrical rms amperes)	Power factor	*X/R* ratio*
10 000 or less	0.50	1.7
10 001–20 000	0.30	3.2
Above 20 000	0.20	4.9

**X/R* is load reactance *X* divided by load resistance *R*.

If the system on which the busway is to be applied has a lower short-circuit power factor (larger *X*/*R* ratio), the short-circuit current rating of the bus may have to be increased. The manufacturer should then be consulted.

The required short-circuit current rating should be determined by calculating the available short-circuit current and *X*/*R* ratio at the point where the input end of the busway is to be connected. The short-circuit current rating of the busway must equal or exceed the available short-circuit current.

The short-circuit current may be reduced by using a current- limiting fuse or circuit breaker at the supply end of the busway to cut it off before it reaches maximum value (see Chapter 5).

Short-circuit current ratings are dependent on many factors, such as bus bar center line spacing, size, strength of bus bars, and mechanical supports.

Since the ratings are different for each design of busway, the manufacturer should be consulted for specific ratings. Short-circuit current ratings should include the ability of the ground return path (housing and ground bar if provided) to carry the rated short-circuit current. Failure of the ground return path to adequately carry this current can result in arcing at joints, creating a fire hazard. The ground-fault current can also be reduced to the point that the overcurrent protective device does not operate. Bus plugs and attachment accessories also should have adequate short-circuit interrupting and/or withstand ratings.

13.8.3 Voltage drop

Line-to-neutral voltage drop V_D in busways may be calculated by the following formulas. The exact formulas for concentrated loads at the end of the line are, with V_R known,

$$V_D = \sqrt{(V_R \cos\phi + IR)^2 + (V_R \sin\phi + IX)^2} - V_R$$

and with V_S known,

$$V_D = V_S + IR\cos\phi + IX\sin\phi - \sqrt{V_S^2 - (IX\cos\phi - IR\sin\phi)^2}$$

Copyright The Institute of Electrical and Electronics Engineers, Inc.
Provided by IHS under license with IEEE
No reproduction or networking permitted without license from IHS
Not for Resale

where

$$V_R = V_S \frac{Z_L}{Z_S}, \quad V_D = V_S - V_R$$

Multiply the line-to-neutral voltage drop by $\sqrt{3}$ to obtain the line-to-line voltage drop in three-phase systems. Multiply the line-to-neutral voltage drop by 2 to obtain the line-to-line voltage drop in single-phase systems.

The approximate formulas for concentrated loads at the end of the line are as follows:

$$V_D = I(R\cos\phi + X\sin\phi)$$

$$V_{pr} = \frac{S(R\cos\phi + X\sin\phi)}{10V_k^2}$$

The approximate formula for distributed load on a line is as follows:

$$V_{pr} = \frac{S(R\cos\phi + X\sin\phi)}{10V_k^2}\left(1 - \frac{L_1}{2L}\right)$$

where

V_D is the voltage drop, in volts
V_{pr} is the voltage drop, in percent of voltage at sending end
V_S is the line-to-neutral voltage at sending end, in volts
V_R is the line-to-neutral voltage at receiving end, in volts
ϕ is the angle whose cosine is the load power factor
R is the resistance of circuit, in ohms per phase
X is the reactance of circuit, in ohms per phase
I is the load current, in amperes
Z_L is the load impedance, in ohms
Z_S is the circuit impedance, in ohms, plus load impedance, in ohms, added vectorially
S is the three-phase apparent power for three-phase circuits or single-phase apparent power for single-phase circuits, in kilovoltamperes
V_k is the line-to-line voltage, in kilovolts
L_1 is the distance from source to desired point, in feet
L is the total length of line, in feet

The foregoing formulas for concentrated loads may be verified by a trigonometric analysis of figure 13-6. From this figure it can be seen that the approximate formulas are sufficiently accurate for practical purposes. In practical cases the angle between V_R and V_S will be small (much smaller than in figure 13-6, which has been exaggerated for illustrative purposes). The error in the approximate formulas diminishes as the angle between V_R and V_S decreases and

Copyright The Institute of Electrical and Electronics Engineers, Inc.
Provided by IHS under license with IEEE
No reproduction or networking permitted without license from IHS Not for Resale

is zero if that angle is zero. This latter condition will exist when the *X*/*R* ratio (or power factor) of the load is equal to the *X*/*R* ratio (or power factor) of the circuit through which the load current is flowing.

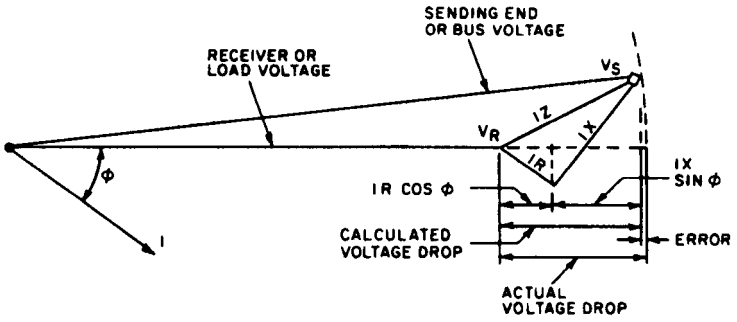

Figure 13-6—Diagram illustrating voltage drop and indicating error when approximate voltage-drop formulas are used

In actual practice, loads may be concentrated at various locations along the feeders, uniformly distributed along the feeder, or any combination of the same. A comparison of the approximate formulas for concentrated end loading and uniform loading will show that a uniformly loaded line will exhibit one-half the voltage drop as that due to the same total load concentrated at the end of the line. This aspect of the approximate formula is mathematically exact and entails no approximation. Therefore, in calculations of composite loading involving approximately uniformly loaded sections and concentrated loads, the uniformly loaded sections may be treated as end-loaded sections having one-half normal voltage drop of the same total load. Thus, the load can be divided into a number of concentrated loads distributed at various distances along the line. The voltage drop in each section may then be calculated for the load that it carries.

Three-phase voltage drops may be determined with reasonable accuracy by the use of tables 13-2 and 13-3. These are typical values for the sandwich-type design of busway. The voltage drops will be different for other types of busway and will vary by manufacturer within each type. The voltage drop shown is three-phase, line-to-line, per 100 ft at rated load on a concentrated loading basis for feeder, plug-in, and trolley busway.

Lighting busway values are single-phase, distributed loading. For other loading and distances use the following formula:

$$\text{voltage drop}\, V_D = \text{table}\, V_D \cdot \frac{\text{actual load}}{\text{rated load}} \cdot \frac{\text{actual distance (feet)}}{100\ \text{ft}}$$

The voltage drop for a single-phase load connected to a three-phase busway is 15.5% higher than the value shown in the tables. Typical values of resistance and reactance are shown in table 13-4. Resistance is shown at normal room temperature (25 °C). This value should be

Copyright The Institute of Electrical and Electronics Engineers, Inc.
Provided by IHS under license with IEEE
No reproduction or networking permitted without license from IHS
Not for Resale

Table 13-2—Voltage-drop values for three-phase sandwiched busways with copper bus bars, in V/100 ft, line-to-line, at rated current with concentrated load*

Current rating (amperes)	Load power factor (percent, lagging)								
	20	30	40	50	60	70	80	90	100
600	2.14	2.45	2.67	2.86	3.04	3.18	3.28	3.30	2.86
800	2.17	2.47	2.67	2.85	3.00	3.12	3.19	3.17	2.69
1000	2.01	2.32	2.52	2.70	2.85	2.98	3.06	3.06	2.64
1200	1.79	2.10	2.28	2.45	2.59	2.71	2.79	2.79	2.41
1350	1.86	2.14	2.32	2.48	2.62	2.73	2.81	2.81	2.41
1600	1.94	2.16	2.35	2.51	2.64	2.75	2.82	2.80	2.64
2000	2.08	2.23	2.40	2.56	2.69	2.79	2.85	2.83	2.39`
2500	1.85	1.97	2.13	2.26	2.39	2.47	2.53	2.51	2.11
3000	1.96	2.15	2.32	2.46	2.59	2.69	2.74	2.73	2.30
4000	1.86	2.06	2.24	2.39	2.52	2.63	2.69	2.68	2.29
5000	1.85	1.97	2.13	2.26	2.37	2.46	2.51	2.49	2.09

NOTE—These are average values for four major manufacturers of sandwiched busway. Voltage-drop values are based on bus-bar resistance at 75 °C (ambient temperature of 25 °C plus average conductor temperature at full load of 50 °C rise).

*Divide values by 2 for distributed loading.

used in calculating the short-circuit current available in systems, since short circuits can occur when busway is lightly loaded or initially energized. To calculate the voltage drop when fully loaded (75 °C), the resistance of copper and aluminum should be multiplied by 1.19.

13.8.4 Thermal expansion

As load is increased, the bus-bar temperature will increase and the bus bars will expand. The lengthwise expansion between no load and full load will range from ½ to 1 in/100 ft. The amount of expansion will depend on the total load, size, and location of the tapoffs, and the size and duration of varying loads. To accommodate the expansion, the busway should be mounted using hangers that permit it to move. It may be necessary to insert expansion lengths in the busway run. To locate expansion lengths, the method of support, the location of power

Copyright The Institute of Electrical and Electronics Engineers, Inc.
Provided by IHS under license with IEEE
No reproduction or networking permitted without license from IHS Not for Resale

Table 13-3—Voltage-drop values for three-phase sandwiched busways with aluminum bus bars, in V/100 ft, line-to-line, at rated current with concentrated load*

Current rating (amperes)	Load power factor (percent, lagging)								
	20	30	40	50	60	70	80	90	100
600	1.91	2.35	2.71	2.95	3.22	3.46	3.67	3.82	3.62
800	1.85	2.13	2.40	2.67	2.91	3.13	3.32	3.46	3.27
1000	1.69	2.04	2.33	2.60	2.86	3.09	3.29	3.45	3.21
1200	1.71	2.03	2.31	2.57	2.81	3.04	3.23	3.37	3.21
1350	1.57	1.82	2.08	2.31	2.53	2.74	2.91	3.04	2.90
1600	1.71	1.95	2.20	2.43	2.65	2.84	3.00	3.11	2.93
2000	1.73	1.96	2.20	2.43	2.64	2.83	2.99	3.09	2.88
2500	1.67	1.96	2.21	2.45	2.66	2.85	3.01	3.12	2.92
3000	1.63	1.92	2.16	2.39	2.60	2.79	2.95	3.05	2.86
4000	1.74	1.94	2.18	2.39	2.60	2.77	2.90	3.00	2.78

NOTE—These are average values for four major manufacturers of sandwiched busway. Voltage-drop values are based on bus-bar resistance at 75 °C (ambient temperature of 25 °C plus average conductor temperature at full load of 50 °C rise).

*Divide values by 2 for distributed loading.

take-offs, the degree of movement permissible at each end of the run, and the orientation of the busway must be known. The manufacturer can then make recommendations as to the location and number of expansion lengths.

13.8.5 Building expansion joints

Busway, when crossing a building expansion joint, must include provision for accommodating movement of the building structure. Fittings providing for up to 3 in of movement are available.

13.8.6 Welding loads

The busway and the plug-in device must be properly sized when plug-in busway is used to supply power to welding loads. The plug sliding contacts (stabs) and protective device (circuit breaker or fused switch) should have sufficient rating to carry both the continuous and

Copyright The Institute of Electrical and Electronics Engineers, Inc.
Provided by IHS under license with IEEE
No reproduction or networking permitted without license from IHS
Not for Resale

Table 13-4—Typical busway parameters, line-to-neutral, in mΩ/100 ft, 25 °C

Current rating (amperes)	Aluminum		Copper	
	R	***X***	***R***	***X***
600	2.982	1.28	2.33	1.57
800	2.00	0.80	1.63	1.25
1000	1.60	0.64	1.27	0.92
1200	1.29	0.55	0.97	0.69
1350	1.03	0.44	0.86	0.63
1600	0.89	0.38	0.72	0.55
2000	0.70	0.32	0.58	0.46
2500	0.57	0.26	0.41	0.32
3000	0.46	0.21	0.37	0.29
4000	0.34	0.16	0.28	0.21
5000	—	—	0.20	0.16

NOTE—Resistance values increase as temperature increases. Reactance values are not affected by temperature. The above values are based on conductor temperature of 25 °C (normal room temperature) since short circuits may occur when busway is initially energized or lightly loaded. To convert values to fully loaded (75 °C), multiply resistance of copper or aluminum by 1.19.

peak welding load. This is normally done by determining the equivalent continuous current of the welder based on the maximum peak welder current, the duration of the welder current, and the duty cycle. Values may be obtained from the welder manufacturer. Loads 600 A and greater require special attention including consideration of bolted taps.

13.9 Layout

Busway must be tailored to the building in which it is installed. Once the basic engineering work has been completed and the busway type, current rating, number of poles, etc., determined, a layout should be made for all but the simplest straight runs. The initial step in the layout is to identify and locate the building structure (walls, ceilings, columns, etc.), and other equipment that is in the busway route. A layout of the busway to conform to this route is made. Although the preliminary layout (drawings for approval) can be made from architec-

Copyright The Institute of Electrical and Electronics Engineers, Inc.
Provided by IHS under license with IEEE
No reproduction or networking permitted without license from IHS Not for Resale

tural drawings, it is essential that field measurements be taken to verify building and busway dimensions prior to the release of the busway for manufacture. Where dimensions are critical, it is recommended that a section be held for field check of dimensions and manufactured after the remainder of the run has been installed. Manufacturers will provide quick delivery on limited numbers of these field-check sections.

Busway has great physical and electrical flexibility. It may be tailored to almost any layout requirement. However, some users find it a good practice to limit their busway installations to a minimum number of current ratings and maintain as many 10 ft lengths as possible. This enables them to reuse the busway components to maximum advantage where production line changes, etc., require relocation of the busway.

Another important consideration when laying out busway is coordination with other trades. Since there is a finite time lapse between job measurement and actual installation, other trades may use the busway clear area if coordination is lacking. Again, standard components such as elbows, tees, offsets, and cable tap boxes can help, since they are more readily available (sometimes from stock). By reducing the time between final measurement and installation, in addition to proper coordination, the chances of interference from other trades can be reduced to a minimum.

Finally, terminations are a significant part of busway layout considerations. For ratings 600 A and above, direct-bused connections to the switchboard, motor-control center, etc., can reduce installation time and problems. For ratings up to 600 A, direct-bused terminations are generally not practical or economical. These lower current ratings of busway are usually fed by short cable runs.

13.10 Installation

Busway installs quickly and easily. When compared with other distribution methods, the reduced installation time for busway can result in direct savings on installation costs. In order to ensure maximum safety, reliability, and long life from a busway system, proper installation is a must. The guidelines below can serve as an outline from which to develop a complete installation procedure and timetable.

13.10.1 Procedure prior to installation

a) Manufacturers supply installation drawings on all but the simplest of busway layouts. Study these drawings carefully. Where drawings are not supplied, make your own.
b) Verify actual components on hand against those shown on installation drawing to be sure that there are no missing items. Drawings identify components by catalog number and location in the installation. Catalog numbers appear on section nameplate and carton label. Location on the installation (item number) will also be on each section.
c) During storage (prior to installation) all components, even the weatherproof type, should be stored in a clean, dry area and protected from physical damage.
d) Always read manufacturer's instructions for installation of individual components. If you are still in doubt, ask for more information—never guess.

Copyright The Institute of Electrical and Electronics Engineers, Inc.
Provided by IHS under license with IEEE
No reproduction or networking permitted without license from IHS
Not for Resale

e) Electrical testing of individual components prior to installation should be done. Identification of defective pieces prior to installation will save considerable time and money.

f) Finally, pre-position hanger supports (drop rods, etc.) and hangers if of the type that can be pre-positioned. Lateral bracing should be provided to minimize sway. The actual installation of busway components can now begin.

13.10.2 Procedure during installation

Safety is most important during the installation procedure and should be foremost in the installer's mind at all times. Deviating from prescribed or written safety policies can result in human injury, including death as well as equipment damage. If safety is in doubt at any time, do not proceed with the installation until all concerns are satisfied.

a) Almost all busway components are built with two dissimilar ends that are commonly called bolt end and slot end. Refer to the installation drawing to properly orient the bolt and slot ends of each component. This is important because it is not possible to properly connect two slot ends or bolt ends.

b) Lift individual components into position and attach to hangers. It is generally best to begin this process at the end of the busway run that is most rigidly fixed (for example, the switchboards).

c) To ensure proper phasing, pay particular attention to "TOP" labels and other orientation marks where applicable.

d) As each new component is installed in position, tighten the joint bolt to proper torque per manufacturer's instructions. Also install any additional joint hardware that may be required.

e) On plug-in busway installations, attach plug-in units in accordance with manufacturer's instructions and proceed with wiring.

f) Safety at this procedure of the installation is paramount. As noted at the beginning of the chapter, bus plugs equipped with one set of plug-in fingers or stabs may be installed while the busway is energized. In general, that includes bus plugs up to a nameplate current rating of 400 A. It should be noted, however, that 200 A and 400 A bus plugs are heavy, large devices, not easily handled or installed by one person. Bus plugs rated 200 A and below generally do not require independent support means other than the busway. To install or remove bus plugs rated 600 A and higher, it is required that the busway be de-energized. Ratings of these sizes are equipped with two or more sets of plug-in fingers or have clamp-type bolted connections for direct attachment to the busway phase bars. All bus plugs constructed accordingly will have attached NEMA warning instructions in accordance with NEMA BU 1-1988, which states, "Turn off power to busway before installing, removing, or working on this equipment."

g) Outdoor busway may require removal of weep-hole screws and addition of joint shields. Pay particular attention to installation instructions to ensure that all steps are followed.

Copyright The Institute of Electrical and Electronics Engineers, Inc.
Provided by IHS under license with IEEE
No reproduction or networking permitted without license from IHS Not for Resale

13.10.3 Procedure after installation

Be sure to recheck all steps to ensure that you have not forgotten anything. Be particularly sure that all joint bolts have been properly tightened. At this point the busway installation should be almost complete. Before energizing, however, the complete installation should be properly tested.

13.11 Field testing

The completely installed busway run should be electrically tested prior to being energized. The testing procedure should first verify that the proper phase relationships exist between the busway and associated equipment. This phasing and continuity test can be performed in the same manner as similar tests on other pieces of electric equipment on the job.

All busway installations should be tested with a megohmmeter or high-potential voltage to be sure that excessive leakage paths between phases and ground do not exist. Megohmmeter values depend on the busway construction, type of insulation, size and length of busway, and atmospheric conditions. Acceptable values for a particular busway should be obtained from the manufacturer. Minimum megohm readings should be no less than 100 divided by the length of the run in feet.

If a megohmmeter is used, it should be rated 1000 V direct current. Normal high-potential test voltages are twice rated voltage plus 1000 V for 1 min. Since this may be above the corona-starting voltage of some busway, frequent testing is undesirable. A common testing method currently used is to periodically conduct a thermographic survey of the busway installation.

13.12 Busways over 600 V (metal-enclosed bus)

Busway over 600 V is referred to as metal-enclosed bus and consists of three types: isolated phase, segregated phase, and nonsegregated phase. Isolated phase and segregated phase are utility-type busways used in power generation stations. Industrial plants outside of power generation areas use nonsegregated phase for connection of transformers and switchgear and interconnection of switchgear lineups. The advantage of metal-enclosed bus over cable is a simpler connection to equipment (no potheads or stress-relieving terminations required). It is rarely used to feed individual loads.

13.12.1 Standards

The NEC requires that the metal-enclosed bus nameplate specify its rated

a) Voltage
b) Continuous current
c) Frequency
d) Impulse withstand voltage

Copyright The Institute of Electrical and Electronics Engineers, Inc.
Provided by IHS under license with IEEE
No reproduction or networking permitted without license from IHS
Not for Resale

e) 60 Hz withstand voltage
f) Momentary current
g) Manufacturer's name or trademark

The NEC further requires that metal-enclosed bus be constructed and tested in accordance with IEEE Std C37.23-1987.

13.12.2 Ratings

Table 13-5, specifies the voltage, insulation, and the continuous and momentary-current levels for metal-enclosed bus. The ratings are equal to the corresponding values for metal-enclosed switchgear.

Table 13-5—Voltage, insulation, continuous-current, and momentary-current ratings of nonsegregated-phase metal-enclosed bus

Voltage (kV rms)			Insulation, withstand level (kV)			
Nominal	Rated maximum	Continuous current (A)	Power frequency (rms), 1 min	DC withstand, 1 min	Impulse	Momentary current (kA, asymmetrical)
4.16	4.76	*	19.0	27.0	60	39–78
13.8	15.00	*	36.0	50.0	95	37–77
23.0	25.80	*	60.0	85.0	125	32–64
34.5	38.00	*	80.0	—	150	32–64

Source: Based on IEEE Std C37.23-1987.

NOTE—High-potential testing is 75% of power frequency voltages.

*(1200, 2000, 3000, 4000)

13.12.3 Construction

Metal-enclosed (non-segregated phase) bus consists of aluminum or copper conductors with bus supports usually of glass polyester or porcelain. Bus bars are insulated with sleeves or by fluid bed process. After installation, joints are covered with boots or tape. Metal-enclosed bus is totally enclosed. The enclosure is fabricated from steel in lower continuous-current ratings and aluminum or stainless steel in higher ratings. Normal lengths are 8–10 ft with a cross section of approximately 16 in by 26 to 36 in, depending on conductor size and spacing. Electrical connection points are electroplated with either silver or tin. Indoor and outdoor (weatherproof) constructions are available. Space heaters should be provided where condensation is a concern.

Copyright The Institute of Electrical and Electronics Engineers, Inc.
Provided by IHS under license with IEEE
No reproduction or networking permitted without license from IHS Not for Resale

13.12.4 Field testing

After installation, the metal-enclosed bus should be electrically tested prior to being energized. Phasing and continuity tests can be performed with other associated electric equipment on the job. Megohmmeter tests can be made similar to those described for busway under 600 V. High-potential tests should be conducted at 75% of the values shown in the "Power frequency (rms), 1 min" ratings column of table 13-5.

Continuous-current ratings are based on a maximum temperature rise of 65 °C of the bus (30 °C if joints are not electroplated). Insulation temperature limits vary with the class of insulating material. Maximum total temperature limits for metal-enclosed bus are based on 40 °C ambient. If the ambient temperature will exceed 40 °C, the manufacturer should be consulted.

The momentary-current rating is the maximum rms total current (including direct-current component) that the metal-enclosed bus can carry for 10 cycles without electrical, thermal, or mechanical damage.

13.13 References

ANSI/NFPA 70-1993, National Electrical Code.[2]

ANSI/UL 857-1989, Safety Standard for Busways and Associated Fittings.[3]

IEEE Std C37.23-1987 (Reaff 1991), IEEE Standard for metal-enclosed bus and calculating losses in isolated-phase bus (ANSI).[4]

NEMA BU l-1988, Busways.[5]

NEMA BU l.1-1991, General Instructions for Proper Handling, Installation, Operation, and Maintenance of Busway Rated 600 Volts or Less.

[2]NFPA publications are available from Publication Sales, National Fire Protection Association, 1 Batterymarch Park, P.O. Box 9101, Quincy, MA 02269-9101, USA.

[3]UL publications are available from Underwriters Laboratories, Inc., 333 Pfingsten Road, Northbrook, IL 60062-2096, USA.

[4]IEEE publications are available from the Institute of Electrical and Electronics Engineers, Service Center, 445 Hoes Lane, P.O. Box 1331, Piscataway, NJ 08855-1331, USA.

[5]NEMA publications are available from the National Electrical Manufacturers Association, 2101 L Street, NW, Washington, DC 20037, USA.

Copyright The Institute of Electrical and Electronics Engineers, Inc.
Provided by IHS under license with IEEE
No reproduction or networking permitted without license from IHS
Not for Resale

This page intentionally left blank

--`,,`,,`-`-`,,`,,`,`,,`---

Copyright The Institute of Electrical and Electronics Engineers, Inc.
Provided by IHS under license with IEEE
No reproduction or networking permitted without license from IHS

Not for Resale

Chapter 14
Electrical conservation through energy management

14.1 Introduction

14.1.1 The energy management program

The establishment of a successful electrical energy management program for an industrial facility is dependent upon the full interest and encouragement of top management of the facility as well as a formulated company policy committed to saving both energy and the moneys associated with energy and demand savings.[1]

The supervision of the energy management program must be delegated to those members of the staff within the organization who will commit the time and resources necessary. The program will not be successful if it is assigned as a part-time duty to staff members whose prime responsibilities lie in other areas. In some instances, sufficient in-house staff may be available to develop a program; however, the management of many industrial facilities will not have access to a staff sufficiently conversant with such a program. If additional services are needed, they may be obtained through the use of consultants and engineering firms specializing in energy management technology. In order to ensure the success of a program, periodic reports should be provided to management. Projects showing the energy and cost savings and payback that have resulted should be included. The report should be reviewed and commented upon by top management. The continued cooperation of the entire organization, from management staff to production workers, is required if the program is to be successful.

14.1.2 Scope

The topics discussed in this chapter represent three basic facets of energy planning:

a) Administrative aspects that embody such items as organizing for and embarking on an energy management program, understanding electric rates, managing loads, and evaluating losses in purchase decisions.
b) Descriptions of electrical devices used in metering and lighting, and discussion of equipment efficiencies in relation to the electrical and mechanical environment.
c) On-site generation, which encompasses cogeneration and peak shaving.

Since energy conservation deals with equipment and systems that are covered in other chapters of this Recommended Practice, some of the content of this chapter may overlap with others. This chapter incorporates material from IEEE Std 739-1984 [B14].[2]

---

[1] The program should cover all fuels (energy sources) and all facilities and processes. The full program approach can better address the interdependency of each fuel (energy source) on the other fuels. This approach will give a better view of the overall energy profile of the facility. However, this analysis is beyond the scope of this text which is written from an electrical standpoint only and is directed at larger facilities. The concepts can be applied in varying degrees to other energy sources and smaller plants.

[2] The numbers in brackets preceded by the letter B correspond to those of the bibliography in 14.12.

Copyright The Institute of Electrical and Electronics Engineers, Inc.
Provided by IHS under license with IEEE
No reproduction or networking permitted without license from IHS
Not for Resale

14.2 Finding energy conservation opportunities

Two recognized methods of finding ways to conserve energy are discussed in this subclause: the energy audit and the use of project lists.

14.2.1 The energy audit

The first method is to make a complete energy audit listing major energy-using equipment with nameplate data relating to energy, any efficiency tests, and estimates or measured hours per month of operation. This will include monthly utility data, amounts, and total costs. National Weather Service monthly degree days for heating and cooling must be included. Generally, a one- or two-year compilation of data is used. The most crucial part of the audit is an intelligent appraisal of energy usage, which entails examining how energy is used as it flows through the processes and facility, and comparing this with accepted known standards. This study can lead to development of a prioritized list of projects with a high rate of return.

14.2.2 Project lists

The second method involves developing a list of specific projects that will reduce energy and costs. This list is determined by reviewing previously gathered information from various sources. Lists of projects can be obtained from associates, newspapers, U.S. Department of Energy (DOE) magazines, the local utility, and trade groups. Local utilities often have demand-side management programs that offer financial incentives if certain conservation measures are pursued. These measures include readjusting thermostats for heating, cooling, and hot water; removing lamps in lighting fixtures; installing storm windows and doors; caulking; adding insulation, etc. *Identifying Retrofit Projects for Federal Buildings* [B7] is an excellent do-it-yourself guide that can be useful in determining energy-reduction projects.

14.2.3 Other important sources

Publications exist that can be used for both the energy audit and project lists. ASHRAE/IES 90.1-1989 [B2] is a joint publication of The American Society of Heating, Refrigerating, and Air Conditioning Engineers, Inc. (ASHRAE) and the Illuminating Engineering Society (IES). It covers national recommendations for Building Energy Performance Standards (BEPS) power and energy budgets for new construction. This standard is updated periodically and other versions will undoubtedly be developed.

Energy codes have been published by a number of states, some of which specify materials similar to ASHRAE/IES 90.1-1989, and others which specify permissible usage on various bases, such as watts per square foot or allowable foot-candle levels. Such information is likely to be available from a state energy office.

Total Energy Management [B19], another helpful document, is a practical handbook on energy conservation and management developed jointly by the National Electrical Contractors Association (NECA) and National Electrical Manufacturers Association (NEMA) in cooperation with the U.S. Department of Energy (DOE).

Copyright The Institute of Electrical and Electronics Engineers, Inc.
Provided by IHS under license with IEEE
No reproduction or networking permitted without license from IHS Not for Resale

14.3 The energy management process

14.3.1 Obtain management approval and commitment

One key to success in an engineering effort is in the advance approval and commitment from upper management and supervision. This approval is even more important in an energy management program because expenditures will generally have no direct effect on production output. However, long-term major cost reductions can often be realized.

Goals and guidelines should be established so that management knows what to anticipate. Furthermore, mutually agreed-upon criteria will help an engineer properly direct the effort. There are numerous instances where corporate savings were unnoticed and unappreciated because an engineer failed to communicate and work with management.

The energy management program should include appropriate organizational changes, including the establishment of an energy committee composed of engineering, purchasing, accounting, scheduling, production, and labor representatives. In addition, a management liaison should be included. This committee should have responsibility and commensurate authority to perform its job of managing energy. Clearly defined and accurately written goals (in energy units, such as kilowatthours per pound of product) and procedures can properly guide the committee efforts.

Regardless of the breadth of the energy committee (which could, in some cases, consist of only one person), the team approach should be used. This means that all affected staff should be consulted before preparing any plans. Results and proposals should then be completely communicated to all interested and involved employees.

14.3.2 Embarking on an energy management program

It is important to establish the existing pattern of electrical usage and to identify areas where energy consumption could be reduced. A history of electric usage, on a month-by-month basis, is available from electric bills; this usage should be carefully recorded in a format (possibly graphic) that will facilitate future reference, evaluation, and analysis. The following is a complete list of items that should be recorded (where appropriate) in the electric usage history (time of day rates may require multiple entries for usages and demands at each different time block for each month):

— Billing month
— Reading date
— Days in billing cycle
— Kilowatthours (or kilovoltampere hours if billed on this basis)
— Billing kilowatt demand (or kilovoltampere if billed on this basis)
— Actual kilowatt demand (or kilovoltampere if billed on this basis)
— Kilovars (actual and billed)
— Kilovar hours (actual and billed)
— Power factor

Copyright The Institute of Electrical and Electronics Engineers, Inc.
Provided by IHS under license with IEEE
No reproduction or networking permitted without license from IHS
Not for Resale

— Power bill (broken down into the above categories plus fuel cost and any additional charges)
— Production level
— Heating or cooling degree days
— Additional column(s) for remarks (such as plant vacation periods)

Plant instrumentation to develop further demand and load characteristics using recording instruments may be desirable. A listing of plant operations, plant equipment, and energy conservation opportunities (ECOs) will provide both a history and a basis for evaluating future improvement. The listing of this information along with electric usage is called an *energy audit* (see 14.2.1). In general, there are four categories of ECOs. These four categories are as follows:

a) *Housekeeping measures*. Easily performed (and usually low cost) actions that should logically be done (for example, turning lights off when not required, cleaning or changing air filters, cleaning heat exchangers, keeping doors shut, and shutting down redundant motors, pumps, and fans).
b) *Equipment modification*. This is usually more difficult and more expensive because it involves physical changes to the electric system (for example, the addition of solid-state variable speed drives, reducing motor sizes on existing equipment, and modifying heating and cooling systems).
c) *Process changes or better equipment utilization*. The restructuring of production schedules or relocating of equipment to reduce energy demand or consumption, or both (for example, combining hot rolling and tempering of steel into one process to eliminate the need to reheat).
d) *Changes to the building shell*. Improving the insulating quality of the building to reduce losses to the outside environment (for example, adding insulation, reducing infiltration, controlling exhaust/intake, etc.).

It should be intuitively obvious that housekeeping and low-cost measures should be undertaken without delay. The larger and more expensive ECOs generally take longer to initiate and should often be performed after low-cost measures are completed. However, there may be cases where obvious equipment modification improvements can be made concurrently with low-cost improvements.

In some instances, constraints—particularly regarding energy availability—may require the expenditure of capital to increase existing energy efficiency in order to have sufficient electrical capacity for future plant expansion. This may occur where either utility capacity is severely limited or the costs associated with increasing service size would be so high that expansions would essentially be made from current energy conservation load reductions.

14.3.3 The equipment audit

The analysis of equipment and its efficiency can be a very simple task requiring only a careful tour of facilities. The analysis can also involve the documentation of all equipment and associated efficiencies. There may be other non-energy related criteria that should be

Copyright The Institute of Electrical and Electronics Engineers, Inc.
Provided by IHS under license with IEEE
No reproduction or networking permitted without license from IHS Not for Resale

included in an evaluation of the ECO. See 14.5.3, which discusses classification of loads during the audit process for the purpose of demand control.

The industrial plant can be divided by function into six equipment/process categories. The six functions are lighting, HVAC (heating, ventilating, and air conditioning) systems, motors and drives, processes (non-motor, such as heat treating), electrical distribution equipment, and the building's environmental shell. A list of specific actions (or inquiries) is given in IEEE Std 739-1984 [B14].

Studies have shown that a more effective use of energy can be achieved by using waste heat or redirecting waste heat. The application of energy in areas not related to the process itself, such as recapturing heat from lighting systems for space conditioning, is another way to efficiently use energy. Waste steam can be used for process heating, air conditioning (using a turbine refrigeration drive or absorption chillers), or for building or area heating.

14.3.4 Tracking progress

The energy audit gives revealing information about the energy usage pattern and the effects of implemented ECOs for the period of time the audit is conducted. While this information is extremely important, the ongoing status is also important. The establishment of a recording and monitoring system is therefore needed to gauge the ongoing electric usage and the effects of implemented ECOs.

There are four important aspects of tracking progress:

a) Meters should be installed at various important load centers.
b) These meters should be read and the data recorded on a regular basis (preferably weekly or by shift). Recording meters will enhance analysis.
c) The data should be analyzed to determine the need for action.
d) The information should be kept in terms of energy units on a common base.

Since energy usage is frequently a function of production rate, the ratio of kilowatts (kilovolt-amperes) or kilowatthours per unit of output may provide more meaning than strict kilowatts or kilowatthours.

14.3.5 Overall considerations

There are several important points to consider when planning and implementing ECOs:

a) The designer should recognize the limitation of his or her capabilities, as well as those of the corporation's, to design and implement an ECO. It may be necessary to call in an energy expert or a consultant to assist in preparing the design. The use of equipment that cannot be properly maintained or is overly complex should be avoided.
b) Careful consideration shall be given to appropriate codes and standards. Some prominent codes and standards are developed and published by the National Fire

Copyright The Institute of Electrical and Electronics Engineers, Inc.
Provided by IHS under license with IEEE
No reproduction or networking permitted without license from IHS
Not for Resale

Protection Association (NFPA), the Environmental Protection Agency (EPA), and the Occupational Safety and Health Administration (OSHA).

c) Plant energy balance is an important consideration. There may be cases where an ECO action would merely shift the energy source from one point (or fuel) to another. For example, in an electrically heated building 15 kW of lighting was turned off during the winter. However, this meant that the heaters had to make up the 15 kW of heat that was supplied by the lights. In this case, the lights should have been left on, because the lighting, in effect, was free during the winter. On the other hand, lighting adds to the ac load in the summer so that 1 kW less of light may also reduce air-conditioning power requirements by 1 kW. Hence, energy balance requires looking at the entire system or building shell. Redirecting excess heat from lighting or any other heat source from the air conditioning or cooling ventilation system can significantly reduce the cooling load.

14.4 Calculating energy savings

14.4.1 Introduction

An understanding of utility rates (or tariffs) is important, because the cost of electric service is considered when evaluating an ECO. Once the energy saving is determined, it should be given a dollar value. In most cases, the average cost of electricity does not accurately reflect the savings per kilowatt (kW) or kilowatthour (kWh). Therefore, this subclause describes the important terms, concepts, and application of rates.

14.4.2 Rate textbook

Virtually all rates have two sections: general rules and regulations, and the rate schedules themselves. The written documents are available through the public utility commission or the electric utility. An energy analyst should study the rates of the utility serving the plant. However, it is necessary to thoroughly understand only the particular schedules applicable to the plants involved in the investigation. The energy engineer then needs to choose that rate that will result in the lowest electrical bill under the planned operating scenario.

The rules and regulations include information regarding billing practices, available voltages, customer responsibilities, voltage regulation, balance and reliability, line extension limits, and temporary service requirements and availability. The rate schedules give the minimum (and maximum) values of usage to qualify for each rate along with the procedure for calculating the cost of electricity. Often, there are charges that apply to all rates, which are listed separately in another section and are called *riders*. Some common rates are residential, commercial, industrial, low-load factor, time of day, and area lighting. Some common riders are fuel-cost, special voltages, and charges for extra facilities, such as redundant services or transformers. Reduced rates may be available for areas where the utility may have excess facilities (such as depressed areas) or where the customer undertakes serious demand-control implementations, such as ice-storage for air-conditioning loads.

Copyright The Institute of Electrical and Electronics Engineers, Inc.
Provided by IHS under license with IEEE
No reproduction or networking permitted without license from IHS Not for Resale

14.4.3 Billing calculations

Each specific rate will contain a means to determine the cost for any or all of the following: kilowatt demand (kWd), kilowatthour (kWh), kilovoltampere (kVA), kilovar (kvar), and power factor level. The charge may vary with time of day or time of year, and minimum service or customer charges may also be included. The textbook definition of a kilowatt is a measure of the instantaneous power requirement (that is, the instantaneous rate of energy consumption). The comparable unit of energy is the kWh. The billing kWd is the highest average rate of energy usage over the billing cycle. Usage (kWh) is generally averaged for a 15 or 30 min demand period. The demand for a 15 min period is determined by multiplying the kWh used in that period by four.

Some electric rates contain a ratchet clause. This ratchet provision sets a minimum level for subsequent billings. This minimum usually continues for three to eleven months. The ratchet is generally applied only to the demand portion of the bill.

14.4.4 Declining block rate and example

To understand the use of the declining block rate in the calculations listed in this subclause, assume that the A to Z Welding Company used 150 000 kWh and had a peak demand of 250 kWd. The first 50 kWd costs $5 per kWd or $250, leaving 200 kWd for the remaining blocks. The next block takes 150 kWd at $4.50 per kWd or $675, leaving only 50 kWd for the next block, which can accommodate 200. The last 50 kWd is then billed at $4 per kWd which costs $200. The total demand charge is the sum of the charges from each block, or $1125, as follows:

Block 1	50 kWd · 5.0 $/kWd	=$ 250
Block 2	150 kWd · 4.5 $/kWd	=$ 675
Block 3	50 kWd · 4.0 $/kWd	=$ 200
Total	250 kWd	$1125 or $4.50 kWd average

The charges for kWh may be performed in much the same manner as shown below:

	kWh · dollars/kWh = charge	
Block 1	50 000 kWh · 0.07 $/kWh =	$3500
Remaining =	150 000 – 50 000 = 100 000	
Block 2	50 000 · 0.065	$3250
Remaining =	100 000 · 50 000 = 50 000	
Block 3	50 000 · 0.060	$3000
Total	150 000 kWh for	$9750 or 6.5¢ per kWd average

The total bill is then $1125 + $9750, or $10 875. The average cost of electricity can be expressed in terms of kWd or kWh. The electric cost can be expressed as 43.50 dollars per kWd or 7.25 cents per kWh. It is important to note that averages cannot be used to determine energy savings. If the demand of this plant is reduced by 25 kWd without an accompanying

Copyright The Institute of Electrical and Electronics Engineers, Inc.
Provided by IHS under license with IEEE
No reproduction or networking permitted without license from IHS
Not for Resale

kWh reduction, the effect on the bill will be seen only in Block 3 of the demand charges (this rate of charge is referred to as the tail rate). The correct energy savings then is 25 · 4 or $100. By using the average total cost per kWd of $43.50, an erroneous savings of $1088 would be shown.

For purposes of economic evaluation of energy conservation only, the additional (rider) costs per kWh—particularly fuel costs—(which may at any time represent a significant percentage of the basic energy cost) may be estimated and be added to the energy block rate. At the time of the energy crisis, increasing fuel costs became a major concern, even though significant effects became evident only in the long term. The utilities usually try to incorporate the major portion of fuel costs into the basic rates.

Most rates include a charge for power factor by

a) Assuming a power factor in the kWd charge;
b) Charging for kVA;
c) Charging for power factors below a given value; or
d) Charging for kvars (reactive demand).

In any case, the utility is capturing its cost for supplying vars to its customers. The subject of var flow is beyond the scope of this Recommended Practice; those interested should refer to a power system text, such as [B23].

14.4.5 Demand rate

A more complex rate is the demand usage block rate in which the size of certain kWh blocks are determined by the peak demand. This rate allows smaller consumers to take advantage of the lower kWh charge when their energy usage is high. (The load factor is a measure of energy usage relative to demand. This factor is the ratio of kWh to kWd times hours per billing cycle. Its value varies between the limits of 0 and 1.0.) The demand usage rate allows a utility to reduce the number of rates and encourages a more consistent level of electric usage. The concept is best described by the following example.

Suppose that the P and Q Packing Company uses 500 000 kWh and has a peak demand of 1000 kWd. The kWh section of their rate schedule is as shown in the following data:

	Blocks	Charge
1)	First 50 000 kWh	7 cents per kWh
2)	Next 200 kWh per kWd	6 cents per kWh
3)	Next 300 kWh per kWd	5 cents per kWh
4)	All excess	4 cents per kWh

Since P and Q's demand is 1000 kWd, the amount of kWh in Block 2 is 200 · 1000 or 200 000; similarly, the amount in Block 3 is 300 000. Once these block sizes are determined, the following procedure (identical to the previous example) can be used:

Copyright The Institute of Electrical and Electronics Engineers, Inc.
Provided by IHS under license with IEEE
No reproduction or networking permitted without license from IHS Not for Resale

Block 1	50 000 · $0.07 =	$ 3500
(500 000 –	50 000 =	450 000 remaining)
Block 2	200 000 · $0.06 =	$12 000
(450 000 –	200 000 =	250 000 remaining)
Block 3	250 000 · $0.05 =	$12 500
Total	500 000 kWh	$28 000

Average cost is 5.6 cents per kWh

This system of billing, in effect, combines the energy and demand charges. If needed for analysis purposes, this rate structure can be broken down into energy and demand components. Some simpler forms of this billing include the basic demand and energy structure with a reduced cost for all kWh over a designated number of hours of the maximum demand.

14.4.6 Time of use rate

The cost of new generating capacity for a utility is generally several times that of the cost of existing generating capacity. The difficulty in siting a new plant, and the long lead time for construction (typically ten to fifteen years) required for a new plant, together with the cost, may make it desirable for the utility to offer inducements for customer-demand reduction. Even for utilities with sufficient existing capacity, economic plant operating practice favors the highest load factors. The time-of-day rate utilizes different rate schedules for different times of day. “Peak” loads and “shoulder” loads (high, but less than peak) would have higher cost rate schedules than those of night, weekend, or holiday loads.

Electric meters are available with three sets of registers that record the usage during the various periods. Electronic-type meters permit even finer gradations. Some electronic meters can gather remote readings at a central location and accumulate data that will permit complex rate computations and/or usage analysis by computer.

Utilities often offer lower rates for loads that are automatically controlled by the utility on a time-of-day basis, such as for water heating. Interruptible power rates may be of advantage to plants where process-control requirements permit the shutting down of loads.

14.4.7 Time value of money

Most engineers do not have an unlimited budget and, therefore, often need to make evaluations of various options. The energy savings of one or more projects have to be weighed against their “own-and-operate” costs. Since the equipment will usually function for many years and a future savings (or cost) is also involved, the time value of money should generally be considered. In order to properly evaluate an ECO, the installed cost as well as the operating, maintenance, and energy expenses should be determined on an annual basis over the life of equipment. Each annual expenditure (or savings) should be inflated and then discounted to the same base by the appropriate multiplier. If the engineer is unfamiliar with the process, he should at least develop the anticipated costs by year and work with the corporate accountant to determine the value of each option to the company.

Copyright The Institute of Electrical and Electronics Engineers, Inc.
Provided by IHS under license with IEEE
No reproduction or networking permitted without license from IHS
Not for Resale

For major projects, the feasibility and scope of an energy-related project may be affected by financial costs ("the cost of money"), the financial position of the company, and operating considerations.

14.4.8 Evaluating motor loss

High-efficiency motors should be considered when specifying new or replacement motors. The energy-saving techniques employed in motor design add to its cost. The value of this energy savings is seen in reduced energy costs. The cost-of-losses evaluation is the process of determining how much additional investment is justified for each kilowatt of losses saved. This section provides a general, simplified approach.

Most industrial motors have a life of approximately 5 to 10 years if they are constantly operated at or near their rated horsepower. Therefore, the evaluation of losses should cover a 5-year period. The low-loss motors should have a longer life due to their construction (lower operating temperatures), but insufficient data is available at this time to include the effect of additional motor life in the loss analysis.

The present value of future loss costs is determined by discounting the cost of 1 kW of losses in each of 5 years to year zero. The present value of an annuity factor is used for this discounting. The factor is as follows:

$$\text{present worth of an annuity} = \frac{(1+i)^n - 1}{i(1+i)^n}$$

where

i = discount rate in per unit (a 10% rate = 0.1 per unit)
n = the number of years (5 for motors)

The tail rate (energy or demand rate for last applicable block from rate tables) should be used in the evaluation of load and no-load losses. Demand costs are not normally significant because most motor demands are diversified, and the demand cost is usually insignificant compared to energy costs. However, the annual demand cost is easily calculated by using the formula:

$$\text{cost} = (\text{kW loss}) \cdot (\$/\text{kW}) \cdot 12 \cdot (\text{diversity effect})$$

Motor losses are comprised of two components: no-load losses which stay fairly constant, and load (or copper) losses which vary as the square of the load. Detailed loss information can usually be obtained for large motors (at least several hundred horsepower in size), but only generic information will normally be available for smaller motors. The loss information may consist of total losses at various loads rather than be separated into load and no-load. The cost of no-load losses is simple to determine: it is the product of the energy cost times the number of hours that the motor is operated per year. Load losses are more difficult to determine for two reasons: 1) the load losses vary as the square of the motor load and 2) the motor load needs to be determined. The motor's load cycle can either be measured directly or

Copyright The Institute of Electrical and Electronics Engineers, Inc.
Provided by IHS under license with IEEE
No reproduction or networking permitted without license from IHS Not for Resale

calculated. Where total losses are given as a function of load, there is no need to do a no-load loss calculation. Inclusion of a load profile may make it possible for the manufacturer to design a motor that will operate at near peak efficiency for the majority of load conditions.

Example. Suppose that a survey shows that a motor is used for three 8-hour shifts per day for 50 weeks every year. During the day, the motor is shut off completely for only 2 hours (between shifts). The remainder of the day, it spends 12 hours at 50% loading, 6 hours at 70% loading, and the remaining 4 hours at 100% loading. The tail rate is $0.05 per kWh and the cost of money is 20%.

The no-load loss cost is determined by the *on-time*.

annual no-load loss cost = (22 h/day) · (7 days/week) · (50 weeks/year) · 0.05 $/kWh
annual no-load loss cost = $385/kW

The load loss cost is determined by the load cycle which, in this case, is repeated daily.

(1) Duration	(2) Load	(3) Load^2	(1) · (3) Per unit loss
$^2/_{24}$ (0.0833)	0	0	0
$^{12}/_{24}$(0.50)	0.50	0.25	0.125
$^6/_{24}$ (0.25)	0.70	0.49	0.1225
$^4/_{24}$ (0.1667)	1.00	1.00	0.1667
$^{24}/_{24}$ (1.0)			Total 0.4142

The per unit losses are 0.4142/kW/day. Therefore, the annual load loss can be calculated as follows:

annual load loss cost = (24 h) · (7 days/week) · (50 weeks/year) · 0.4142 · 0.05 $/kWh
annual load loss cost = $174/kW

The worth of losses for this particular application is found by multiplying the annual costs by the present worth of annuity factor as follows:

Value (over 5 years) of 1 kW reduction of

a) no-load loss cost $= \frac{(1+0.2)^5-1}{0.2(1+0.2)^5} \cdot \$385 = 2.99 \cdot 385 = \$1151/\text{kW}$

b) load loss cost $= \frac{(1+0.2)^5-1}{0.2(1+0.2)^5} \cdot \$174 = 2.99 \cdot 174 = \$\ 520/\text{kW}$

Assuming equal load and no-load reductions, it would be worth $3342 to increase the efficiency of a 125 hp motor from 92% to 94% (assuming 2 kW loss reduction) in this example.

Copyright The Institute of Electrical and Electronics Engineers, Inc.
Provided by IHS under license with IEEE
No reproduction or networking permitted without license from IHS
Not for Resale

14.4.9 Transformer losses

Transformers can be manufactured with efficiencies as high as 98–99%. Most transformer manufacturers offer a variety of loss designs with associated differences in cost. The manufacturer can determine the optimum design for a given value of losses, which makes it beneficial to include the cost of losses in the bid package. Both load (coil) and no-load (core) loss costs should be included since they each affect design parameters differently.

Transformer losses are determined at 100% load. The full-load average winding temperature is 95 °C for 65 °C rise oil-insulated transformers (85 °C for 55 °C/65 °C rise). The winding loss varies approximately as the square of the load (and varies slightly with operating temperature). The transformer efficiencies at various levels are normally available from the manufacturer.

Had the previous example been a transformer loading situation, the annual load loss value would have been the same (at $174), but the no-load loss value would increase because transformers are energized 365 days per year for 24 hours per day. The new annual no-load losses would be $438/kWd (24 · 365 · $0.05). The kVA load, not the kWd load, should be used in determining the load losses. Since transformers normally last decades, at least a 10-year evaluation period should be used.

Recent developments in core steels have reduced core losses significantly. Where the transformer is to be continuously energized, it is important to specify very low core losses.

14.4.10 Evaluating losses in other equipment

In general, losses associated with currents are a function of load squared. Magnetic losses in iron core reactors, large magnets, or solenoids are a function of voltage squared.

It is possible to increase wire sizes strictly for the purpose of reducing loss costs. For example, a 100 ft run of AWG No. 1/0 aluminum has a resistance of 0.210 Ω per thousand feet and a rating of 150 A. The annual cost of losses using the motor example load pattern is as follows (using kW = I^2R / 1000 and the $174 per kW load loss cost).

$$\$174/\text{kW} \cdot \frac{150^2}{1000} \cdot 0.021 \;=\; 174 \cdot \frac{22\,500}{1000} \cdot 0.021 \;=\; \$82 \text{ per yr loss cost per thousand ft}$$

For a 3-phase, 3-wire circuit, the cost of losses would be three times this value or $246. The use of AWG No. 3/0 aluminum wire at 0.0133 Ω resistance would reduce the 3-phase losses to (0.0133/0.210) · $246 = $156 for a savings of $90/1000 ft.

In systems with a neutral, if the loads on a feeder were high in harmonics (as with discharge lighting or with the use of solid-state rectifiers) then the power losses in the neutral must be considered (as an approximation, the losses per wire would be multiplied by 4).

Copyright The Institute of Electrical and Electronics Engineers, Inc.
Provided by IHS under license with IEEE
No reproduction or networking permitted without license from IHS Not for Resale

14.5 Load management

14.5.1 Introduction

Any energy-conscious engineer or plant manager should attempt to exert control over the plant's energy usage (kWh) and the rate of usage (kWd). The simple fact is that no energy is used when equipment is shut off. Therefore, one of the first jobs of an energy engineer is to make sure that unused, redundant, and idling equipment is shut off.

Early demand controllers were tied into the meter pulse system and began shutting down equipment when it appeared that a preset demand would be exceeded. While this procedure can significantly reduce electric costs, there is some question as to the amount of energy saved (or added). A second generation of controllers has increased the effectiveness by shedding all nonessential load in addition to keeping the demand under a present level.

The following subclauses briefly explain various types of controllers and how to design a proper system. While this discussion does not include any details of the hardware needed to implement an energy conservation program, the chapter does provide sufficient information to properly direct engineers' efforts through the use of publications listed in this and other chapters of this book, as well as appropriate codes and standards.

14.5.2 Controllers

The control function can be performed by many types of systems ranging from a simple manual system to a sophisticated computer system. The energy engineer should match the system needs with equipment capabilities to determine the optimum choice. In many cases, significant energy, demand, and cost savings can be achieved by prudent operation of equipment or mechanical interlocking. Demand controllers may operate to automatically reduce load, for example, direct control of air compressors; or they can be used to provide alarms to operating or supervising personnel for initiating action to reduce consumption or demand.

Semiautomatic controllers are the simplest form of controls. These include time clocks that switch loads based on a predetermined time schedule. Photocells are light-activated controllers that can be used in conjunction with a time clock or other devices. Environmentally controlled switches and sensors are also effective. Devices can either work independently or jointly to control energy usage. However, several considerations should be made when applying a controller. These considerations are as follows:

a) The operation of the equipment in an automatic mode should not endanger anyone near the equipment or inadvertently interrupt any process.
b) The controller should be periodically checked to see that it is operating as planned and has not been defeated.
c) In the cases of time clocks, the time should be checked and the time control adjusted to compensate for changing seasons and conditions.
d) The controlled equipment should be capable of withstanding the planned number of starts and stops. The controller should have a back-up power supply.

Copyright The Institute of Electrical and Electronics Engineers, Inc.
Provided by IHS under license with IEEE
No reproduction or networking permitted without license from IHS Not for Resale

Five types of demand controllers are discussed, four of which require a utility demand meter pulse. In any case, one should first recognize that any controller or meter calculates the maximum demand by averaging the kWh over a set interval (a 15 min demand interval would indicate the kWh for 15 min multiplied by 4 since there are four 15 min periods per hour). The five controller schemes are noted below (see IEEE Std 739-1984 [B14] for a more complete description):

a) *Instantaneous*. Controls loads at any time during an interval if the rate of usage exceeds a preset value.
b) *Ideal rate*. Controls loads when they exceed the set rate but allows a higher usage at the beginning of the interval.
c) *Converging rate*. Has a broader control bandwidth and an offset in the beginning of the interval but tightens control at the end of the interval.
d) *Predictive rate*. The controller is programmed to predict the usage at the end of the interval by the usage pattern along the interval and switches load to achieve the preset demand level.
e) *Continuous interval*. The controller looks at the past usage over a period equal to (or less than) the demand interval. Loads are switched in such a manner that no time period (of an interval's duration) will see an accumulation of kWh that exceed the preset value. This controller needs no utility meter pulse.

Before any of the above controllers can be installed, a load survey should be made. This survey is, in essence, an equipment/process audit and can well be done in conjunction with the audit described in 14.3.3 and 14.5.3.

Demand controllers may be incorporated into the facility master control system. In this case, signals have to be sent or telemetered to the control system. Various software packages are available to perform the energy control functions, data logging, and visual alarm and display.

14.5.3 Equipment audit and load profile

Each process and piece of equipment shall be surveyed to find which loads can be switched off and to what extent they can be switched. The engineer shall evaluate any loss of equipment life or mechanical problems associated with switching each load. The survey consists of, but is not limited to, the listing of equipment by the following four categories:

a) *Critical equipment*. This equipment is required at all times or it needs to be controlled in the present manner for production, safety, or other reasons.
b) *Necessary.* While this equipment is required for production (or other reasons), it can be shut down at some measurable financial loss during extreme conditions.
c) *Deferrable*. This equipment is important but can be turned off for varying periods of time. Some load may even be switched virtually at will provided that some minimum on time is allowed.
d) *Unnecessary.* This equipment has usually been left on, even though it is not needed. This equipment should be shut off and periodically checked. Sometimes equipment is used only occasionally and the user fails to de-energize after use, so an indicator or semiautomatic controller may be properly applied.

Copyright The Institute of Electrical and Electronics Engineers, Inc.
Provided by IHS under license with IEEE
No reproduction or networking permitted without license from IHS Not for Resale

Once the loads are recorded and analyzed, the proper control method can be established with the help of a load profile. The load profile is developed with a graphic meter for at least a week (continuous) at various production levels. The profile is then analyzed utilizing the equipment audit to determine the target demand. Kilowatt recorders are available on a rental basis or for purchase (since continual monitoring is highly desirable). A recording ammeter can also be a good indicator if the power factor is known. The off-peak load pattern can be as revealing as the peak load pattern. Recording may have to be performed several times each year to account for seasonal weather or operations patterns.

In the absence of load profile, some judgment needs to be made as to the amount of equipment that must be kept running at the estimated time(s) of peak load. This estimate is then made a target or target demand for the controller. However, the designer should also plan to control the use of equipment so that it is de-energized when not needed.

14.6 Efficiencies of electrical equipment

14.6.1 Losses

All electrical equipment has some type of loss associated with its use. There are five different types of losses that should be considered in determining the optimum operating point for a piece of equipment.

a) Resistive (copper) losses are associated with the flow of current. These are generally a function of the square of the current from the equation $P = I^2 \cdot R$. However, the energy engineer has to also recognize the temperature relationship of R, because increased current will invariably increase the operating temperature of a device. Tube devices like thyratrons consume power in their heating elements and their arcs, but the heat is not a square function of current. Solid-state devices have a constant voltage drop when they are conducting, so the power-current function is essentially linear.

b) Magnetic losses are associated with motors, transformers, reactors, regulators, and solenoids. These losses are usually a function of voltage squared (approximately) and consist of hysteresis, eddy current, and mutual induction losses.

c) Motion losses are produced as the equipment operates. These losses include friction loss from bearings, wind, and system restrictions.

d) Mechanical losses are reflected in the electric circuit's power requirements. These losses include inefficiencies associated with transmissions, eddy current clutches, and speed-control devices (which can even be in the electric circuit).

e) A combination of factors will cause additional or unnecessary losses if a piece of equipment is operated outside of its design limits. Operating above the rated capability can cause overheating (and associated loss costs) as well as destruction of the equipment. Operating the equipment too far below rated capacity wastes capital dollars, causes an increase in the no-load portion of the losses, and lowers the power factor. The key to energy engineering is to match the device to the load and the power supplied to the device.

Copyright The Institute of Electrical and Electronics Engineers, Inc.
Provided by IHS under license with IEEE
No reproduction or networking permitted without license from IHS
Not for Resale

14.6.2 Efficiency

The textbooks define efficiency as the power (kW) output divided by the power (kW) input at rated output. The percent efficiency is 100 times this value. This method should not be used for energy evaluations. The efficiency of a device for any energy engineering effort should be considered over its entire cycle of operation. In an energy evaluation, the following expression applies (with the assumption that the output is converted to kWh):

$$\%\ \text{energy efficiency} = \frac{\text{kWh out (over operating cycle)}}{\text{kWh in (over operating cycle)}} \cdot 100$$

Most equipment is given an efficiency rating at nameplate or full-load conditions. When the device is used under different conditions, the nameplate value of efficiency becomes incorrect for the applied device.

14.6.3 Oversizing electrical equipment

The cost of losses may be sufficiently high to justify the installation of wiring that exceeds the ampacity requirement of a particular circuit. In many cases, there will be virtually no change in the cost of the feeder overcurrent device, the conduit, the pull boxes, and the receiving panel. However, in other cases the added cost of equipment upsizing will be significant. The actual costs and availability of capital will determine the actual course of action.

14.6.4 Motors

Motors are the largest portion of electric energy consumed in plants today. They are fairly high efficiency devices at rated load. In general, three-phase motors are more efficient than single-phase motors, and larger motors are more efficient than smaller ones. There is only minor improvement in efficiency above 200 hp and the knee of the efficiency versus size curve occurs at about 10 to 15 hp. The peak efficiency of a motor occurs at full load with about 105% (of nameplate) balanced voltage at its terminals. However, as load is reduced from nameplate, the optimum efficiency occurs at a lower voltage (see IEEE Std 739-1984 [B14] for further details).

Motor voltage unbalance will increase motor losses due to a negative sequence voltage that causes a rotating magnetic field in the opposite direction of motor rotation. A 2% voltage unbalance will increase losses by 8%, a 3 1/2% unbalance will increase losses by 25%, and a 5% unbalance will increase losses by 50%.

The power factor of most three-phase motors is between 80% and 90% at full load and decreases as load is reduced. The installation of power factor correction (to 95% or so) at the motor terminals will accomplish two tasks. Improved power factor will decrease current requirements thereby reducing I^2R losses in the supply line. More importantly, the use of capacitors at the motor will improve voltage regulation by increasing the voltage level when the motor is used. Large banks of unswitched capacitors can cause problems from several aspects (see lEEE Std 739-1984 [B14] for further details) and are, therefore, not recom-

Copyright The Institute of Electrical and Electronics Engineers, Inc.
Provided by IHS under license with IEEE
No reproduction or networking permitted without license from IHS Not for Resale

mended as a first choice. If large banks of capacitors exist (or are planned), they should be switched as a function of plant load.

High-efficiency motors are available and their cost is usually justified. However, each application should be evaluated. These motors achieve a higher efficiency by using better grade steel, special low-friction bearings, larger copper windings, closer tolerances, and smaller air gaps. These motors have the added benefit of a longer life because they run cooler than low-efficiency models.

Motor-speed control takes on several forms. The earliest methods of speed control involved the use of resistors to reduce the voltage level at the motor's terminals. The losses of this type of system are easily determined and usually quite high. Modern techniques include voltage control with thyristors, such as SCRs and triacs. These devices are more efficient but supply a somewhat distorted voltage supply, and the devices themselves have losses. The most sophisticated speed control is a variable-speed drive (VSD), which varies frequency and voltage level of a synthesized ac voltage wave. The VSD does not synthesize a pure voltage wave for the motor; so losses occur as a result of the harmonic content. The peak efficiency of the new systems generally occurs at full speed and full load on the motor, although motors can be designed to provide the peak efficiency at other than full load.

In any case, an SCR rectifier system causes voltage notching on any power system. The use of an oscilloscope or a harmonic analyzer is recommended in any thyristor application to evaluate the need for filtering at the source of the notching. Notching and associated harmonics can cause capacitor and other equipment failure when large amounts of capacitance are on the system or the system is at a low-load condition, or both.

All devices that generate harmonics, such as discharge lighting or solid-state rectifiers, will cause increased motor losses because of the following:

a) The higher frequency components are generally associated with higher losses, and they also increase the effective resistance of conductors.
b) The apparent power factor of the circuit is reduced when any form of "wave-chopping" occurs.
c) The harmonics perform no "work" in machinery, but cause additional losses and consequent heating.

14.6.5 Transformers

Transformers are very efficient devices. Their loss evaluation was covered in 14.5.3. Load losses are a function of the square of the ratio of load kVA to nameplate kVA (modified for change in resistance as load increases). No-load losses are a function of voltage squared. Dry-type transformers are found throughout an industrial complex, and they are usually energized every hour of the day. The losses of these units are significant; they should be switched "off" when not in use or removed whenever possible (the manufacturer should be consulted since moisture can be accumulated during the "off" time and cause premature failure). This discussion does not refer to redistribution centers, which are considered next.

Copyright The Institute of Electrical and Electronics Engineers, Inc.
Provided by IHS under license with IEEE
No reproduction or networking permitted without license from IHS
Not for Resale

Double-ended substations have been used for many years to increase reliability. A double-ended station is also energy efficient at high loads, although it is less efficient at low loads due to twice the required no-load (core) loss. The decreased load loss from shared load is illustrated as follows:

1 unit of full load = 1 per unit loss

$$\text{2 units at half load} = \left(\frac{1}{2}\right)^2 + \left(\frac{1}{2}\right)^2 = \frac{1}{4} + \frac{1}{4} = \frac{1}{2} \text{ per unit losses}$$

The losses on double-ended substations, designed for normal feed from both sources, is reduced by using only slightly larger-than-normal transformers. Transformers will handle heavy overloads for hours without harm. During the relatively infrequent periods in which one transformer handles the entire substation load, the increased losses over the course of a year are relatively small and the effects of the overload can be reduced by as much as 50% by supplementary fan cooling.

14.6.6 Capacitors

Capacitors can be significant energy savers if they are properly applied. A capacitor bank is also a load (a 750 kvar bank draws almost 1000 A at 480 V), so it should be disconnected when var support is not required. If a fuse blows on a large capacitor, an unbalanced voltage will occur along with resultant increases in motor losses. Therefore, the fuse integrity of capacitor banks should be closely monitored. High harmonic content in the power supply has been known to cause either capacitor failure or unplanned operation of protective devices.

14.6.7 Equipment overview

Equipment should be operated as near as possible to its nameplate rating, in terms of both load and voltage. The voltage should be well-balanced and regulated in an efficient manner wherever possible. Capacitors should be carefully applied and switched. Unnecessary and underloaded equipment should be removed or replaced. The system should be checked for voltage level, balance, and harmonic content. Energy-saving devices should be considered if their worth has been scientifically established. Their function should also match the concepts discussed in this section.

14.7 Metering

Metering provides the opportunity to monitor and control the rate of energy consumption in the electrical system. Accurate and complete kWd, kWh, and power-factor information is needed for a good energy audit as well as for continued measurement and control for an energy management program. No detail is given in this chapter on the subject of metering, since the subject is covered thoroughly in Chapter 11. It is worth noting that good metering is virtually worthless without a program of meter reading, data recording, data analysis, and a guide for action. Meters themselves save no energy, but thoughtful use of metering information does save energy and money.

Copyright The Institute of Electrical and Electronics Engineers, Inc.
Provided by IHS under license with IEEE
No reproduction or networking permitted without license from IHS Not for Resale

Ideally, metering should be installed as the electric system is being built. However, metering is often an afterthought. There are several cautions and appropriate safety requirements that must be observed from an engineering, purchasing, or installation standpoint:

a) Relay-rated potential transformers (PTs) and current transformers (CTs) shall not be used for metering because their accuracy is not sufficiently high at normal loads.
b) The meters shall be installed at a point where they can be easily and safely read.
c) The meters should be out of the way of normal traffic (and of door swing, even for doors used only on occasion) so that their glass covers, which can protrude 18 in from the surface, are not accidentally broken.
d) Clamp-on CTs may be required in areas where 24-hour production is required, because the system cannot be shut down long enough to install in-line or donut types of current transformers.
e) CTs (and PTs) shall have insulation voltage ratings that shall exceed the anticipated voltage level of the system on which they are being installed.

Portable instruments can be used to provide the input-versus-output energy for various machines and processes. Since the slip and output horsepower are linear functions of the load on a motor from 10% to 110% of full load, a tachometer or strobe tachometer can be used to determine the output horsepower of a motor. The electrical input effect should be translated to nameplate conditions (see IEEE Std 739-1984 [B14] for more accurate information). Recorded metering information will reveal differences due to the varying energy demands of the electrical system. The metering results should be plotted, and reasons for variation should be sought. Valuable information can be gleaned by reading as frequently as every shift. However, trends rather than differences between two consecutive readings tend to be more indicative of improvement or lack of improvement in energy conservation.

Single reading variations may indicate one of the following:

a) Abnormal production conditions
b) Faulty or failing equipment
c) Defeat of energy management controls
d) Meter error
e) Meter reading error
f) New production volume
g) Installation and operation of new equipment

Lack of any changes in kWd rate or kWh may indicate that the demand indicator was not reset or that the meter is not being read or is defective. In any case, the meter should be checked and readings verified.

Changes in the trend of usage or usage different from planned targets can signify any of the following:

a) The targets are too high or too low
b) Something other than production level affects energy usage
c) The energy management methods are (or are not) working

Copyright The Institute of Electrical and Electronics Engineers, Inc.
Provided by IHS under license with IEEE
No reproduction or networking permitted without license from IHS
Not for Resale

Regardless of the metering plans, all metering information should be recorded under the following (or similar) headings:

a) Date
b) Previous meter reading
c) Present (new) meter reading
d) Difference
e) Meter multiplier
f) kWh consumption
g) Demand indicator reading
h) Indicator constant
i) Peak kWd for current (just read) period

Extensive metering data is best utilized as part of a computerized data-base. Any modern commercial data-base system can be used to accumulate and analyze the data, as well as to prepare presentation material, including graphs.

14.8 Lighting

14.8.1 Introduction

The cost of lighting impacts the plant operating cost and the cost of manufactured products. Therefore, an energy-effective lighting system is essential to the management of an industrial plant. This is a system in which a minimum amount of energy is consumed to deliver a most satisfactory visual environment suitable for a particular type of industrial operation.

Energy effectiveness in the industrial lighting system can be achieved by the following:

a) Recognizing the visual requirements for the task and providing a proper design approach to the system.
b) Selecting the best-suited energy-efficient light source and equipment for the system.
c) Optimizing the control technique and the integration of daylight into the system.

In the subsequent subclauses, each of the above items will be discussed so that designers and/or engineers can apply the knowledge to achieve lighting energy savings. Today, if energy-effective lighting were implemented in all of our industrial plants and buildings, it is estimated that the aggregate national electricity demand would be reduced by approximately 10%. This would mean a reduction of carbon dioxide emissions by 4% of the national total, a very significant contribution toward a cleaner world environment.

Copyright The Institute of Electrical and Electronics Engineers, Inc.
Provided by IHS under license with IEEE
No reproduction or networking permitted without license from IHS Not for Resale

14.8.2 System approach for energy-effective lighting

14.8.2.1 Introduction

Illuminating engineers must fully understand visual requirements and have basic knowledge about selecting relative luminance for the task. They must be aware of the task's immediate surroundings and anything else in the peripheral field of view. Research indicates that desirable seeing conditions exist when the uniform and veiling reflections are effectively minimized. Since this condition is not always practical, luminance-limitation recommendations will provide a generally satisfactory visual environment. It should be noted that not all visual tasks are in the horizontal plane. Much critical seeing in industry is involved with tasks in a vertical or other non-horizontal plane. Illuminating engineers must make special provision for luminance distribution and placements to provide task luminance in these non-horizontal planes.

Illuminating engineers today have at their disposal a wide range of types and sizes of energy-efficient light sources, luminaires, and other lighting equipment. They must exercise their professional judgment to make choices based on economic analyses and application requirements.

14.8.2.2 Energy-efficient light sources

14.8.2.2.1 Incandescent

Incandescent lighting can still provide the system of choice from a conservation standpoint. There are also means of improving existing incandescent systems.

Reflector-type (PAR) lamps are the most popular after A-type (standard medium base) lamps. The first lamp to effectively reduce wattage was the elliptical reflector lamp, which was a replacement for standard reflector lamps used in baffled downlights. Depending on the area being lit, as much as 50% in energy savings could be realized by the elliptical reflector lamp.

The current trend in energy savings combines incandescent and tungsten halogen technologies. A series of lamps was introduced for accent, display, and downlighting for new construction and renovation. The tungsten halogen lamps provided excellent lumen maintenance and twice the life ratings at the same wattage and lumen output of their equivalent incandescents.

Lower wattage halogen sources were developed in special bulbs, similar to incandescent-type bulbs, for improved results at reduced energy usage. This is an excellent example of the improvements in incandescent technology over the past 15 years. The 150 PAR was initially reduced to 120 W or 20% energy reduction. Further development reduced the wattage to 90 W for a 40% energy reduction.

Since the energy crisis of the '70s, some major trends have developed in incandescent lighting. They are as follows:

Copyright The Institute of Electrical and Electronics Engineers, Inc.
Provided by IHS under license with IEEE
No reproduction or networking permitted without license from IHS
Not for Resale

— The first is toward a decrease in wattage size for many common applications.
— The second is to lower wattage and utilize reflector-type lamps that direct light toward a specific task.
— The third is the addition of krypton gas to the bulb fill, which reduces wattage at equal light output by about 10%. However, krypton gas is a rare, expensive gas, which has a negative impact on the cost of the lamps.

14.8.2.2.2 Fluorescent

Fluorescent technology was developing well at the time of the energy crisis in the ’70s. Fluorescents were the most popular source of lighting in commercial and industrial applications. During the ’70s, the industry reacted quickly to develop a reduced-energy lamp for most fluorescent circuits.

The first energy-saving lamps resulted in a 5 W savings in the most popular F40T12 circuit and 15 W savings in the second most popular F96T12 slimline model. Further development resulted in an additional 1 W improvement in the energy savings of the 40 W lamps so that it is now rated at 34 W.

In a relatively short period of time, a complete line of energy-saving lamps was on the market. Today, over 30% of the fluorescents used are of this type. Table 14-1 shows the energy-saving fluorescent lamps developed and watts saved per lamp with respect to the standard lamp.

Table 14-1—Energy-saving versus standard fluorescent lamps

Energy-saving	Standard	Watts saved per lamp
F30T12/RS/ES	F30T12/RS	5
F40/RS/ES	F40/RS	6
F40/PH/ES	F40/PH	6
F90T12/60/ES	F90T17	6
F48T12/ES	F48T12	9
F96T12/ES	F96T12	15
F96T12/HO/ES	F96T12/HO	15
F96T12/VHO/ES	F96T12/VHO	30

Today, there are many types of compact fluorescent lamps. They use bent-tube geometrics that can be adapted for incandescent socket use. Developments continue on these fluorescent

Copyright The Institute of Electrical and Electronics Engineers, Inc.
Provided by IHS under license with IEEE
No reproduction or networking permitted without license from IHS Not for Resale

lamps. The use of compact lamps, which utilize electronic circuitry, provides the light output of a 75 W incandescent lamp using only 18 W. Its life expectancy has increased to 10 000 hours. The wattage range for these compact lamps is 5–40 W. Generally, one classification of these lamps is called "twin tubes," while another is called "quad tubes."

While new products were being developed, considerable improvements were also being made in the standard straight tube lamps. It was discovered that human visual system responded best to primary colors. By changing the proportions of the primary colors, white light can be made to match the color appearance of any fluorescent lamp.

F32T8 lamps use rare earth phosphor (CRI 70) and have a lamp efficacy of 90 lm/W operating at 60 Hz. This lamp is rapidly replacing the standard F40T12 lamps.

14.8.2.2.3 High-intensity discharge (HID)

Today, HID lamps include mercury vapor, metal-halide, high-pressure sodium, and low-pressure sodium lamps.

Lamp development has occurred mainly in high-pressure sodium and low-pressure sodium products during the last decade. Metal-halide lamps offered the best opportunity from a color acceptability point of view. Low-wattage metal-halide systems have been positioned successfully to replace incandescent applications wherever color is important. High-pressure sodium lamps offer the highest luminous efficacy in environments where colors need to be distinguished. New developments have led to a lower wattage range that is down to 35 W. The improved color versions of high-pressure sodium lamps were also developed with a color rendering index (CRI) over 80 in the lower wattage range. Since HID lamps have had very few problems in the application, they are likely to experience further development in the coming years.

14.8.2.3 Energy-efficient ballasts

14.8.2.3.1 Fluorescent

It is well-known that fluorescent lamps that are driven at high frequency are more efficient. Electronic ballasts are available for the F40T12, the slimline, the new T8 lamps, and other energy-saving fluorescent lamps on both 120 and 277 V circuits. Operation of an electronic ballast involves the use of transistor circuitry to rectify the 60 Hz ac to a dc voltage, and then invert it back to an ac sine wave voltage having the frequency range of 10–30 kHz. When the frequency of the on/off operation of the mercury arc within the lamp is increased from 60 Hz to many times that value, the lamp efficacy can be raised by nearly 12%. At the same time, with the absence of the magnetizing losses within a core-coil ballast, the relative efficiency of the ballast is increased. Although the electronic ballast costs more than the standard core-coil ballast, operating factors should reflect an appreciable reduction in life-cycle cost for a lighting system.

There are two types of dimming ballasts: core and electronic. Core ballasts require auxiliary switching equipment to reduce the duty cycle or limit the current. These systems are energy-

Copyright The Institute of Electrical and Electronics Engineers, Inc.
Provided by IHS under license with IEEE
No reproduction or networking permitted without license from IHS Not for Resale

efficient when lamps are operated well below 100% for a substantial portion of the time. High-frequency electronic ballasts can readily be used to dim fluorescent lamps over a wide range of light levels. No major auxiliary equipment is required. All external control wiring is either low-voltage or fiber-optic wiring.

Some manufacturers have introduced ballasts that are optimized for energy-saving 35 W lamps, and these systems are slightly more efficient than when operated with 40 W ballasts. However, in applications where ballasts need not be replaced, the slight increase in efficiency does not justify the cost of refitting these ballasts. Table 14-2 summarizes the input watts for typical fluorescent lamp ballasts. The reduction in input watts for new energy-saving ballasts versus standard ballasts are also shown in this table.

Table 14-2—Typical fluorescent lamp ballast input watts

Lamp type*	Nominal lamp current	Nominal lamp (W)	System input (W)								Circuit type
			Standard ballasts		Energy-saving ballasts		Electronic ballasts				
			One-lamp	Two-lamp	One-lamp	Two-lamp	One-lamp	Two-lamp	Three-lamp	Four-lamp	
F20T12	0.380	20	32	53	—	—	—	—	—	—	Rapid start, preheat lamp
F30T12	0.430	30	46	81	—	—	31	61	92	—	Rapid start
F30T12, ES	0.460	25	42	73	—	—	27	52	81	—	Rapid start
F32T8	0.265	32	—	—	37	71	36	58	87	112	Rapid start
F40T12	0.430	40	57	96	60	86	36	71	109	—	Rapid start
F40T12, ES	0.460	34/35	60	82	43	72	31	59	93	—	Rapid start
F48T12	0.425	40	61	102	—	—	—	—	—	—	Instant start
F96T12	0.425	75	100	173	—	158	88	140	—	—	Instant start
F96T12, ES	0.455	60	83	138	_	123	73	116	—	—	Instant start
F48T12, 800 mA	0.800	60	85	145	—	—	—	—	—	—	Rapid start
F96T12, 800 mA	0.800	110	140	257	—	237	—	—	—	—	Rapid start
F96T12, ES, 800 mA	0.840	95	125	227	—	207	—	—	—	—	Rapid start
F48, 1500 mA	1.500	115	134	242	—	—	—	—	—	—	Rapid start
F96, 1500 mA	1.500	215	230	450	—	—	—	—	—	—	Rapid start

*ES—Energy saving

14.8.2.3.2 High-intensity discharge (HID)

The choice of a ballast depends on economic considerations versus performance. A mercury lamp will operate from metal-halide ballasts, but the converse is not always true. There are several different types of ballasts for high-pressure sodium lamps:

a) *Reactor or lag ballast*. Inexpensive, with low power losses and small in size.
b) *Lead ballast*. Fairly good regulation for both line and lamp voltage variations.

Copyright The Institute of Electrical and Electronics Engineers, Inc.
Provided by IHS under license with IEEE
No reproduction or networking permitted without license from IHS Not for Resale

c) *Magnetic regulation ballast*. Provides the best wattage regulation with change of either input voltage or lamp voltage. It is the most costly and has the greatest wattage loss.

d) *Electronic ballast*. Has a steady, constant wattage output with changes in the source impedance as well as excellent regulation. During the life of a high-pressure sodium lamp, it can save 20% more energy by maintaining a constant wattage output in addition to the 15% intrinsic energy savings compared to an equivalent core-coil ballast. Table 14-3 summarizes the input watts for typical HID lamp ballasts The ballasts shown are high-reactance autotransformer (LAG), constant wattage autotransformer (CWA), constant wattage regulated (CW), and high-reactance regulated (regulated lag).

14.8.2.4 New luminaires for energy-efficient light sources

14.8.2.4.1 Fluorescent

A new trend for lighting new buildings is the increased use of the reflectorized fixtures. This trend may be traced to an increase in the number of states and national lighting efficiency standards in recent years. However, these fixtures can create a “teardrop-like” distribution that may eliminate glare on a computer screen, but also reduces light to other areas.

The design of the optical reflector is another important performance consideration. At the present time, complex multiple-plane designs using up to 30 reflective planes can be created using computer-aided design/computer-aid management (CAD/CAM) technology, which permits excellent lighting distribution as well as improved fixtures efficiencies.

A recent study of input energy requirements indicates that for an equal luminance level the total energy consumption required to operate the lamp and ballasts with silver reflector is 84.5 W and that, with a white paint interior, the total energy consumption is 126.6 W. Higher fixture input wattage produces higher operating temperatures, which affect lamp and ballast performance. The use of reflectorized luminaires has been economically justified on the basis of life-cycle cost for new installations.

14.8.2.4.2 Specular retrofit reflectors for fluorescent troffers

Reflectors are available in two basic types: semi-rigid reflectors, which are secured in the fixture by mechanical means, and adhesive films, which are applied directly to the interior surfaces of the fixture. Either silver or aluminum may be used as the reflecting media. In general, reflectors increase the percentage of lamp lumens that reach the work plane. When the visual appearance of a delamped fixture is unacceptable or when the original fixture has an unusually low efficiency, reflector may be used as an efficiency remedy. However, the uniformity of illumination should be evaluated to assure that adequate light is provided.

14.8.2.4.3 High-pressure sodium

Proper luminaire design is the key to lighting efficiency. Newly developed luminaires use prismatic glass reflectors that are especially made for high-pressure sodium lamps. In

Copyright The Institute of Electrical and Electronics Engineers, Inc.
Provided by IHS under license with IEEE
No reproduction or networking permitted without license from IHS
Not for Resale

Table 14-3—Typical HID lamp ballast input watts

Lamp type	ANSI designation	Watts	Reactor	Ballast type			
				High-reactance auto–transformer (LAG)	Constant wattage auto-transformer (CWA)	Constant wattage regulated (CW)	High-reactance regulated (regulated lag)
Mercury	H46	50	68	74	74	—	—
	H43	75	94	91–94	93–99	—	—
	H38/44	100	115–125	117–127	118–125	127	—
	H39	175	192–200	200–208	200–210	210	—
	H37	250	272–285	277–286	285–300	292–295	—
	H33	400	430–439	430–484	450–454	460–465	—
	H36	1000	1050–1070	—	1050–1082	1085–1102	—
Metal-halide	M57	175	—	—	210	—	—
	M58	250	—	—	292–300	—	—
	M59	400	—	—	455–465	—	—
	M47	1000	1050	—	1070–1100	—	—
	M48	1500	—	—	1610–1630	—	—
High-pressure sodium	S76	35	43	—	—	—	—
	S68	50	60–64	68	—	—	—
	S62	70	82	88–95	95	—	105
	S54	100	115–117	127–135	138	—	144
	S55	150 (55 V)	170	188–200	190	—	190–204
	S56	150 (100 V)	170	188	188	—	—
	S66	200	220–230	—	245–248	—	254
	S50	250	275–283	296–305	300–307	—	310–315
	S67	310	335–345	—	365	—	378–380
	S51	400	463–440	464–470	465–490	—	480–485
	S52	1000	1060–1065	—	1090–1106	—	—

--`,,`,,`-`-`,,`,,`,`,,`---
Copyright The Institute of Electrical and Electronics Engineers, Inc.
Provided by IHS under license with IEEE
No reproduction or networking permitted without license from IHS
Not for Resale

addition to achieving maximum light utilization, they reflect the intense light source with excellent light cutoff and high-angle brightness control.

14.8.3 Energy-saving lighting techniques

14.8.3.1 Using incandescent systems

In addition to the use of rare krypton gas as a fill gas, energy saving can be accomplished in incandescent systems by a variety of choices:

a) Use of lower-wattage lamps where less light is acceptable
b) Use of shorter-life high-efficacy lamps
c) Use of reflectorized lamps in place of standard lamps
d) Use of transformer fixtures that accommodate low-voltage lamps

When a 100 W lamp of 3500 hour life design is replaced, an equal amount of light can be obtained from a 75 W lamp of 850 hour life design. An energy saving of 25 W and a cost saving of $4 per year will result.

Low-voltage lamps are inherently more efficient than lamps of standard voltage design with equal life values. These gains in efficiency, which vary by wattage, range from 10% to 30%. A change to low-voltage track lighting provides double gains in efficiency, since it accommodates low-voltage reflector lamps.

14.8.3.2 Using fluorescent systems

Today numerous possible combinations can be selected to suit any particular application.

Fluorescent lamps are sensitive to ambient temperatures. By using reduced-wattage lamps or low-loss ballasts, less heat will be generated and the operating temperature point of the lamps will probably change. The critical area is the coldest spot on the bulb surface. Most fluorescent lamps will peak in light output at around 100 °F cold-spot temperature. For enclosed luminaire types that ordinarily operate lamps at temperatures higher than 100 °F, replacing these lamps with high-efficacy reduced-wattage lamps may result in a net increase in luminaire output even though they are rated for less output than that of standard lamps.

Within limits of conventional design practices, low-wattage lamps can provide illuminating engineers with a new flexibility to more closely tailor lighting levels to specific standards or requirements while simultaneously reducing the owner's life-cycle costs.

14.8.3.3 Using high-intensity discharge (HID) systems

Retrofitting or relighting with a light source of higher efficacy is an essential technique to achieve energy savings in an HID lighting system.

For maximum savings, a mercury system can be replaced by a high-pressure sodium system, or if color discrimination is important, a metal-halide system. Two basic retrofit options can

Copyright The Institute of Electrical and Electronics Engineers, Inc.
Provided by IHS under license with IEEE
No reproduction or networking permitted without license from IHS
Not for Resale

be applied to a mercury system. The first option is to replace the luminaire ballasts with metal-halide (MH) or high-pressure sodium (HPS) lamps. The second option is to replace the luminaire ballasts with special retrofit MH or HPS lamps designed to operate on mercury ballasts. Although retrofit lamps produce substantial savings when applied to an existing mercury system, they generally cost more and have a shorter life or lower efficacy than those of standard MH or HPS lamps operated on companion ballasts.

At the present time, retrofit HPS lamps with wattages of 150 W, 215 W, and 360 W can be used on mercury systems using lamps with wattages of 175 W, 250 W, and 400 W, respectively. Retrofit MH lamps are available in 400 W and 1000 W versions, which are intended for use with CW/CWA-type mercury ballasts. The 1000 W MH lamp can reduce wattage per luminaire by either 35 W or 85 W depending on the type of ballast with which it is used. A new addition is the 325 W MH lamp, which saves about 70 W per luminaire, while delivering 40% more light than the 400 W mercury lamp it replaces.

The most effective way of achieving energy savings with an HID system is to replace the existing incandescent or mercury system, even fluorescent lighting, with a properly chosen HPS light source. In this type of "relighting" program, a careful study of the area visual requirements and a thorough economic analysis based on the life-cycle costing (LCC) should be made before a decision can be made to proceed with the project. A number of lamp and luminaire manufacturers offer computer services for evaluating lighting system alternatives.

14.8.3.4 Using daylight

Daylight entering a space may be analyzed in terms of the quantity and quality of the light. The quantity of daylight may be adequate to reduce the electric lighting level; however, its quality should also be analyzed. Poor-quality daylight may lead to discomfort and a loss in visibility, which may result in a decrease in human performance and productivity.

Assuming suitable daylight control, a southern exposure is preferred to optimize the contribution of daylight into a space. Incorporating daylight into the lighting design involves two steps:

a) Determination of the quantity of light coming to the window surface
b) Use of that quantity to determine the daylight contribution to the interior part of the space

Once the contribution of light to the window surface has been calculated, two methods are available for determining the light contribution to the space: the point-by-point method and the lumen method. Computer programs are available for these computations.

14.8.4 Lighting controls

Electrical and electronic controls can be used to conserve energy by reducing lighting levels by turning off lamps or by dimming. All lighting controls can normally be classified in two basic categories: on-off controls and level controls. In its simplest form, lighting control can be accomplished manually by means of a switch located on a wall, in a luminaire, or in a

Copyright The Institute of Electrical and Electronics Engineers, Inc.
Provided by IHS under license with IEEE
No reproduction or networking permitted without license from IHS Not for Resale

panel box. The current trend is toward greater use of lighting contactors. However, many circumstances require a varied level of lighting. Dimming devices are the most used means of providing the level controls. In a large building, a microprocessor may be used to turn all lights on and off on a preprogrammed schedule. However, localized controls, such as a personnel detector or a photocell, may be used to control each office within a suite of offices and to override the centralized control as demanded by occupancy.

14.8.5 Lighting and energy standards

In 1976, the Energy Research and Development Association (ERDA) contracted with the National Conference of States on Building Codes and Standards (NCSBCS) to codify ASHRAE 90-75. The resulting document was called "The Model Code for Energy Conservation in New Buildings." This model code has been adopted by a number of states to satisfy the requirements of Public Laws 94-163 and 94-385.

There have been several revisions to ASHRAE 90-75 since 1976. The information on lighting from this revised standard was incorporated into the lighting portion of ASHRAE 90A-1980 [B1]. (At the time this Recommended Practice went to press, other ASHRAE publications were under development that will supersede the ASHRAE standards referenced herein.) The Illuminating Engineering Society (IES) included the same information, as well as other information on lighting, in LEM-1 [B16] and LEM-4 [B17].

ASHRAE/IES 90.1-1989 [B2] is a useful and practical standard for energy-conserving building design and operations. The U.S. Department of Energy published, in the Federal Register of May 6, 1987, a proposed interim rule entitled "Energy Conservation Voluntary Performance Standards for New Commercial and Multi-Family High Rise Residential Buildings." When issued, this rule will be mandatory for all federal buildings and a voluntary recommendation for non-federal buildings.

14.9 Cogeneration

Cogeneration is the process of concurrently producing heat and electricity (or shaft horsepower) in a more efficient manner than if they were produced separately. The most common form of cogeneration used today is a topping cycle in which electricity (or shaft horsepower) is produced, and the exhausted heat is then used to supply process heating.

The use of cogeneration has decreased over the years, but energy conservation and governmental push have increased interest. The high capital commitment required for cogeneration demands careful consideration. The following should be considered when determining the choice between purchasing electricity from a utility or generating electricity internally:

a) The cost of purchased electricity versus the cost of prime mover fuel (including receiving and storing facilities);
b) The current and future availability of prime mover fuel;
c) The need for a standby power supply (which is normally required);
d) The requirement to match process heat with electric generation in both time and magnitude;
e) The requirement for continuous use of both process heat and electricity;

Copyright The Institute of Electrical and Electronics Engineers, Inc.
Provided by IHS under license with IEEE
No reproduction or networking permitted without license from IHS
Not for Resale

f) A fairly high energy requirement (at least 5 MW);
g) An analysis of all governmental benefits (investment tax credits, etc.) and requirements (such as pollution control). (A more complete description of this subject is given in IEEE Std 739-1984 [B14].)
h) The benefit of selling surplus electricity or steam to the utility or to others. (Governmental regulations (FERC and PURPA) may expedite the sale of excess electricity to the utility. Waste heat is often very usable for building heating, either internally or to sell.)

14.10 Peak shaving

Many industries are required to have, and exercise, emergency or standby power supplies. These supplies can be used to reduce the electrical demand if they are exercised during peak periods. The use of emergency equipment on a daily basis to reduce demand should be given careful analysis in terms of cost versus (tail rate) savings. Costs should include extra maintenance and loss of life as well as prime mover fuel.

Peak shaving must be evaluated in terms of the utility regulations. In some cases, peak shaving may be permitted where the emergency power is in parallel with the utility; in most cases, specific load is transferred to the emergency system to reduce the plant utility demand.

14.11 Summary

With few exceptions, the implementation of an energy management program that will result in lower energy bills represents a change from the past, whether it involves motive power, lighting, or space conditioning. It is essential, therefore, that those responsible for implementing the program become familiar with all aspects of the plant's operating system. Energy cost savings are moot, for example, if overall productivity is reduced or other operating costs increase. Moreover, as with any industry, there are both reliable and unreliable providers of energy management technologies and services; some claims can never be realized in practice. In this final section, important considerations for ensuring the successful implementation of an energy management program are summarized.

Each ECO should be thoroughly evaluated in the actual plant setting for which it is proposed. This evaluation must consider, in addition to energy savings, all aspects of the opportunity as it relates to existing equipment and processes. Equipment cycling may not be cost-effective, for example, if the cycling leads to increased equipment downtime because the equipment was not originally designed to cycle.

Generally speaking, an appropriate strategy for evaluation should take into consideration the consequences of device failure for the entire production process. The designer must balance the additional costs of redundancy against the value of increased reliability. The greater the change to an existing process, the greater the consequences of failure. In making this assessment, for example, plant health and safety officials should be consulted at an early stage of the design process to ensure that their concerns are fully addressed. In thermal cooling energy storage in buildings, for example, a particular concern is the loss of cooling ability following

Copyright The Institute of Electrical and Electronics Engineers, Inc.
Provided by IHS under license with IEEE
No reproduction or networking permitted without license from IHS Not for Resale

the depletion of ice from the storage tank. Since chillers have often been downsized as part of the off-peak cooling benefit of thermal energy storage, they may be inadequate to hold building temperatures in the comfort zone following depletion of ice.

Other essential information includes the track record of similar measures at other installations, which vendors can provide or which can be acquired through communication with the relevant plant managers. In addition, the designer should also carefully consider the guarantees suppliers offer regarding the performance of their equipment, especially as they relate to their equipment's operation in the existing plant.

One of the more difficult problems of design is that of obtaining suitable interfaces between application devices; such as motors, heating units, and other utilization devices; and relatively low-energy control systems. The interfacing of application devices and remote-control systems requires careful coordination between the mechanical equipment (or motor-control center) and the supervisory control equipment. The control devices, the controlled equipment, and the signal system must be compatible.

Feedback from the controlled areas or equipment to the control center is very desirable. For example, where information is transmitted to remote power equipment, it may be wise to ascertain if the device has functioned as required, or if a piece of equipment was started manually or with a computer or other automatic control intervention.

Listed below are some energy conservation devices and concepts that may be utilized. Some of these are basically energy-demand-reduction devices and others are more concerned with overall energy conservation.

a) Load limiters or demand limiters are devices programmed to operate loads in such a sequence or manner that the billing demand remains at an optimized value. Such devices can be used to provide alarms when the rate of energy usage exceeds established levels.
b) Use of automated devices for shutting down or reducing the level of operation of nonessential equipment. Multi- or variable-speed equipment with regulator or feedback control can materially reduce energy requirements. This equipment can be combined with other simple devices, such as photocell control of lighting, to be integrated with computerized controls of the heating and ventilating system.
c) Use of waste heat, including that of lighting fixtures, as part of the space-conditioning system.
d) Efficiency and losses may be specified or used in determining the acceptability of equipment. For example, the cost of rated transformer losses for various loads, calculated for given periods of time such as 10–20 years, can be added on a weighted basis to the first cost of the transformer in evaluating the low bid.
e) Energy can be recovered in vertical transportation equipment by utilizing regenerative systems. A descending elevator, for example, can feed back energy into the power system.
f) Use of high-efficiency motors, drives, belts, and power-factor ballast will minimize line and equipment losses. Power-factor correcting equipment (e.g., capacitors,

Copyright The Institute of Electrical and Electronics Engineers, Inc.
Provided by IHS under license with IEEE
No reproduction or networking permitted without license from IHS
Not for Resale

synchronous motors) and the proper sizing of induction motors all serve to maintain the facility power factor at high values with minimum losses.

14.12 Bibliography

[B1] ASHRAE 90A-1980, Energy Conservation in New Building Design (applies to residential buildings only).

[B2] ASHRAE/IES 90.1-1989 (and addenda), Energy Efficient Design of New Buildings Except Low-Rise Residential Buildings.

[B3] Bonnett, A. H., "Understanding Efficiency in Squirrel-Cage Induction Motors," *IEEE Transactions on Industry Applications,* vol. 1A-16, no. 4, pp. 476–483, July/Aug. 1980.

[B4] Brown, R. J., and Yanuck, R. R., *Life Cycle Costing*. Commonwealth of Pennsylvania, 1979.

[B5] Chen, K., *Industrial Power Distribution and Illuminating Systems.* New York: Marcel Dekker, Inc., 1990.

[B6] Cunningham, R. L., "Harmonic Pollution on an Industrial Distribution System," Conference Record, IEEE Industry Applications Society Annual Meeting, 1980, no. 80CH1575-0, pp. 405–408, 1980.

[B7] Federal Energy Management Program (FEMP), "Identifying Retrofit Projects for Federal Buildings," Report 116.

[B8] Gibbons, W. P., "Analysis of Steady-State Transients in Distribution Low Voltage Power Systems With Rectified Load," *IEEE Transactions on Industry Applications,* vol. IA-16, no. 1, pp. 51–59, Jan./Feb. 1980.

[B9] Grant, E. L., and Ireson, W. G., *Principles of Engineering Economy,* 4th edition. New York: The Ronald Press Company, 1960.

[B10] Harkins, H. L., "Cogeneration for the 1980's," Conference Record, IEEE Industry Applications Society Annual Meeting, 1978, no. 78CH1346-61A, pp. 1161–1168, 1978.

[B11] Haufman, J. E., Editor, *IES Lighting Handbook*, Reference Volume. New York: Illuminating Engineering Society (IES), 1984.

[B12] Helms, R. N., *Illuminating Engineering for Energy Efficiency.* New York: Prentice-Hall.

[B13] Hickock, H. N., "Electrical Energy Losses in Power Systems," *IEEE Transactions on Industry Applications,* vol. 1A-l4, no. 5, pp. 373–386, Sept./Oct. 1978.

Copyright The Institute of Electrical and Electronics Engineers, Inc.
Provided by IHS under license with IEEE
No reproduction or networking permitted without license from IHS Not for Resale

[B14] IEEE Std 739-1984, IEEE Recommended Practice for Energy Conservation and Cost-Effective Planning in Industrial Facilities (IEEE Bronze Book) (ANSI).

[B15] Kovacs, J. P., "Economic Considerations of Power Transformer Selection and Operation," *IEEE Transactions on Industry Applications,* vol. 1A-16, no. 5, pp. 595–599, Sept./Oct. 1980.

[B16] LEM-1, Lighting Power Limit Determination, Illuminating Engineering Society, New York, NY, 1982.

[B17] LEM-4, Energy Analysis of Building Lighting Design and Installation, Illuminating Engineering Society, New York, NY, 1984.

[B18] Linders, J. R., "Electric Wave Distortions, Their Hidden Costs and Containment," *IEEE Transactions on Industry Applications,* vol. 1A-IS, no. 5, pp. 458–471, Sept./Oct. 1979.

[B19] National Electrical Contractors Association (NECA) and National Electrical Manufacturers Association (NEMA)*, Total Energy Management: A Practical Handbook on Energy Conservation and Management,* 2nd edition, 1979.

[B20] Sieck, R. E., and Schweizer, P. F., "An Assessment of Energy Cost Trends on Electrical Equipment Selection for the Petrochemical Industry," *IEEE Transactions on Industry Applications,* vol. 1A-1 6, no. 5, pp. 624–632, Sept./Oct. 1980.

[B21] Smith, C., Editor, *Efficient Electricity Use*. New York: Pergamon Press, 1978. A reference book on energy management for engineers, architects, planners, and managers.

[B22] Stebbins, W. L., "Implementing an Energy Management Program," *Fiber Producer,* vol. 8, no. 5, pp. 44–47, Oct. 1980.

[B23] Stevenson, W. D., *Elements of Power System Analysis,* 4th edition. New York: McGraw-Hill, 1982.

Copyright The Institute of Electrical and Electronics Engineers, Inc.
Provided by IHS under license with IEEE
No reproduction or networking permitted without license from IHS Not for Resale

This page intentionally left blank

Copyright The Institute of Electrical and Electronics Engineers, Inc.
Provided by IHS under license with IEEE
No reproduction or networking permitted without license from IHS
Not for Resale

Chapter 15
Industrial substations: Plant-utility interface considerations

15.1 Introduction

This chapter provides an outline of the interface considerations for the planning, design, construction, and operation of industrial-type substations. These substations commonly are supplied by 15–230 kV class utility systems.

An industrial substation is typically used to transform a higher utility voltage to a plant's lower distribution or utilization voltage level. Figure 15-1 provides an illustration of an industrial substation. Such substations are normally dedicated to serve a single industrial plant with loads greater than 5 MVA and commonly include one or more transformers. Industrial-type substations may also be used to interconnect a utility with an independent power producer. The interconnection requirements of such facilities could add a significant degree of complexity to the interface considerations and are beyond the scope of this chapter.

The planning, design, and construction of a substation often take about two years. An approximate overall schedule of the activities involved is discussed in more detail in 15.2.9 and throughout this chapter.

Dedicated industrial substations can be designed, constructed, and owned by the utility, by the industrial plant, or by joint arrangements as determined by the utility operating and rate policies, the plant management's desires, and in some cases, negotiation between representatives of the utility and plant. Likewise, operating and maintenance responsibilities can rest with the utility and/or the industrial plant, depending on ownership.

This chapter assumes that the utility has the design, construction, and ownership responsibility. Even if this is the case, plant personnel should still monitor all aspects to ensure that plant requirements are met. If the plant has any of the design, construction, or ownership responsibilities, then the activities outlined here must be assumed by the plant personnel or other designated parties.

15.1.1 Substation justification

A new or upgraded industrial substation may be needed for any of the following reasons:

a) A new industrial plant is to be constructed or an existing plant is increasing its load to a level that cannot be adequately served from the utility's existing system.
b) The plant's operation causes, or may cause, voltage fluctuations that may disturb the utility's other customers and/or the plant's own operations.
c) The plant has special power-quality service requirements that are best served by such a substation.

Copyright The Institute of Electrical and Electronics Engineers, Inc.
Provided by IHS under license with IEEE
No reproduction or networking permitted without license from IHS
Not for Resale



Figure 15-1—An industrial substation

Copyright The Institute of Electrical and Electronics Engineers, Inc.
Provided by IHS under license with IEEE
No reproduction or networking permitted without license from IHS
Not for Resale

d) The installation of on-site plant generation requires new or modified substation facilities for the utility to provide back-up supply service and/or for the plant to deliver power to the utility.
e) It is more cost-effective and practical to serve the plant's load at a different voltage level.
f) The utility system in the area of the plant is being modified to meet the utility's other area needs.

15.1.2 Development stages

The four basic developmental stages of a substation project considered in this chapter are as follows:

a) *Planning*. Includes the determination of the needed capacity, evaluation of alternative methods of service, selection of the service voltage and required facilities, and related financial requirements. This stage concludes with a contract between the utility and the plant.
b) *Design*. Includes development of detailed engineering drawings, finalizing of facility requirements, bidding documentation, and specifications for the facilities and changes required. This stage concludes with the letting of construction contracts.
c) *Construction*. Includes the construction and energizing of the substation facilities.
d) *Operations*. Includes the development, implementation, and documentation of the procedures for operating and maintaining the substation. These procedures are typically developed during the design and construction stages and completed prior to energizing the substation.

15.1.3 Project participants

In the planning stage, personnel representing the plant and the utility should conduct preliminary discussions regarding the project scope. In addition to using the plant's staff, the plant management should usually engage a competent engineering consultant to assist in developing the design scope and applicable criteria. Project design criteria developed during the planning stage should be suitable for later use by the same, or another, engineering consultant for developing the design specifications and other construction and equipment-purchase documents.

The utility personnel involved in the planning stage are generally the customer account representative, the system planner, and the substation project engineer. The utility design engineers, relay protection engineers, and possibly others assigned to the project should also be involved in the planning stage to assure consistency of the conceptual plans of the project with the evolving design and operating requirements of the project.

In the design stage, the plant management typically uses the services of a consulting engineer to assist in the development of the technical requirements for the plant's system since the plant does not usually have sufficient technical in-house resources. This consultant should identify changes and new requirements in the plant's electrical distribution system made

Copyright The Institute of Electrical and Electronics Engineers, Inc.
Provided by IHS under license with IEEE
No reproduction or networking permitted without license from IHS Not for Resale

necessary by any supply changes. The consultant may also assist with the technical liaison and interface with the utility.

During the construction stage, the utility and plant representatives will most likely work with the construction or utility construction crews. All parties are typically involved in the day-to-day activities, construction schedule, work progress, and resolution of any problems.

The specific participants in the operating and maintenance functions will depend on the owner of the facilities and on the availability and expertise of the owner's personnel.

15.2 Planning stage

This stage develops and resolves technical interface and conceptual planning considerations so that the project scope and criteria can be adequately defined. The various conceptual aspects typically involved and considered in the planning process are discussed below.

15.2.1 Definition of load

The projected plant load requirements and characteristics should be defined and provided to the utility. During the planning stage, the utility may only require an estimate of the initial and future electrical demand plus a statement about the type of operations anticipated in the plant (e.g., steel rolling mill, metal fabrication, chemical or petroleum processing, etc.).

When firm information about load is not available, reasonable conceptual estimates must be made because certain load characteristics can affect the project scope and requirements. For example, the way in which the plant operates large motors or other loads could influence the basic design. Chapter 2 deals with these planning considerations.

15.2.2 On-site generation

Consideration should be given to both the immediate and future possibility of installing on-site generation since it could affect the substation design. It is almost always less expensive to incorporate design provisions at this stage than at a later date. Cogeneration of electric power may be desirable if certain economic, thermal, and electric system conditions are met. Chapter 2, IEEE Std 1001-1988 [B17],[1] and IEEE Std 1109-1990 [B19] provide more detail of the technical issues and considerations for the interconnection of a plant-owned generator with a utility.

Plant representatives should also obtain the specific written interconnection requirements of the utility for on-site generation in order to properly make an evaluation.

[1]The numbers in brackets preceded by the letter B correspond to those of the bibliography in 15.6.

--`,,`,,`-`-`,,`,,`,`,,`---

Copyright The Institute of Electrical and Electronics Engineers, Inc.
Provided by IHS under license with IEEE
No reproduction or networking permitted without license from IHS Not for Resale

15.2.3 Conceptual planning considerations

The following specific conceptual supply and facility planning aspects should be evaluated and resolved between the utility and the plant during this stage.

15.2.3.1 Capacity/reliability/power quality

These aspects are commonly interrelated. Larger MVA capacities generally require higher utility voltage levels, which are built with higher insulation levels and a stronger grade of construction. This more secure construction typically results in service with increased reliability. Usually, power quality is also perceived to be better at higher utility voltage levels in a given area; mainly, because voltage sags, probably the most common cause of plant disruption, are typically less frequent and less severe in terms of duration on higher voltage systems [B27], [B28]. It should be noted, however, that the switching of long higher voltage lines could produce disruptive voltage transients. Also, steady-state voltage on higher levels may not be regulated to the extent that some lower levels are.

For a given voltage level, reliability and power quality may be inversely related. For example, service from three lines may be more reliable than from two lines. However, three lines increase exposure to line disturbances. Similarly, utility supply systems that have many grid lines to a given area provide more reliability (and lower system impedance) to the industrial plant. However, these interconnected systems may have more voltage variation because disturbances can easily be transmitted large distances across the grid.

The utility supply arrangement should be carefully evaluated since there are often system trade-offs available between reliability and power quality. Considerations that should be made include the following:

a) Single-line radial service
b) Two-line (or multiple line, if available) service, which could be either radial or loop. This service may not provide full service with the outage of the single largest capacity component. The normal and emergency loading limits on facilities and the basis for these limits should be discussed.
c) Separation of the supply sources, i.e., different utility buses or substations
d) Configuration, type, and coordination of protective devices and associated isolation switches

Chapter 2 provides additional details on these service arrangements and the associated considerations.

The utility should help define levels of power capacity, reliability, quality, and their associated costs to enable the plant personnel to perform a meaningful cost/benefit analysis. The plant personnel should estimate the cost of shutdown and evaluate the utility's system quality to ascertain if it meets expectations or if changes might be warranted. Aspects that should be evaluated (for the last 3–5 year period and the future if possible) include the following:

a) The frequency, duration, and causes of outages. (Note that a line outage may not result in a service interruption depending on the substation primary and secondary

Copyright The Institute of Electrical and Electronics Engineers, Inc.
Provided by IHS under license with IEEE
No reproduction or networking permitted without license from IHS Not for Resale

breaker configuration and operating procedures. This subject is discussed later in this subclause.)

b) Mean time to repair
c) Supply voltage variations: steady-state and deviations such as sags, surges, harmonic content, etc. See Chapter 3 for more information.
d) Impact on, and effect of, other customers on the supply lines

Plant personnel should, when possible, evaluate the tolerance of various plant equipment to supply voltage variations. There is a wide range of susceptibility and ride-through capability in plant equipment manufactured today, and there are no recognized standards that apply to this equipment. The IEEE Std 1100-1992 [B18] provides valuable information on the powering and grounding of sensitive equipment.

Another aspect that should be evaluated is the safe shutdown of processes for system disturbances outside of the tolerable operating range of specific plant equipment. These considerations will allow the plant management to evaluate the extent of any future problems and determine the need for special equipment, line conditioning, or other devices.

The utility supply voltage level is usually determined by the utility based on the plant's load requirements. The plant personnel may have a role in selecting the utility supply delivery voltage if more than one level is available. Selection should be made based on a cost/benefit analysis together with careful consideration of both present and future service, capacity, and service quality expectations and requirements.

The plant's primary utilization or distribution voltage level will usually be determined by the plant engineer after considering immediate and future load requirements. The amount of load to be served, its characteristics, the size of the facility to be served, and the equipment available will usually dictate the choice of utilization voltage.

When considered necessary, substation transformers can have automatic voltage regulating capability which maintains steady-state voltage at the substation secondary typically within $\pm$ 1 V on a 120 V base. However, the reaction time of these mechanisms is usually set between 20–60 s to avoid excessive operations. If a more responsive regulated voltage supply is required for certain applications, consideration should be given to installing different types of fast regulation equipment. IEEE Std 1100-1992 [B18] and IEEE Std 519-1992 [B11] provide more information on such devices.

Consideration should be given to the configuration and operation of the plant's bus. Alternative approaches to guard against bus and/or breaker failure and ensure service continuity include such arrangements as the double bus, double breaker; main transfer bus; double bus, single breaker; and breaker-and-a-half schemes. See [B3] and [B4].

Closed bus tie operation will provide enhanced continuity of service as well as higher available fault current, which the plant's system must be designed to handle. It is possible to ride through or minimize service interruptions with closed bus tie operation if the voltage collapse is not too severe and the plant does not experience subsequent utility system faults. Closed bus tie operation is typically contingent on the utility system requirements, plant operating preference, and fault current impact on the plant's system. Note that utilities commonly have the need for certain control requirements over the plant's switchgear, including mains and bus

Copyright The Institute of Electrical and Electronics Engineers, Inc.
Provided by IHS under license with IEEE
No reproduction or networking permitted without license from IHS Not for Resale

tie breaker(s). Typically, the utility will require access to open and lock out these protective devices for certain system conditions and faults (i.e., such as a line or transformer fault or alarm).

There are also other plant bus switching and operational approaches that may be considered for unusual circumstances. One unique approach is an automatic bus transfer scheme controlled by logic controllers that implement a mechanically fast load transfer to an alternate supply in the event of an interruption on one supply line. This approach is particularly dependent on the existing motor load and its ability to sustain voltage during the transfer operation [B5]. A "static" or electronic load transfer is also possible with two synchronized feeds, and this system is relatively independent of load type.

15.2.3.2 Supply system fault/voltage flicker/harmonic distortion

Generally, the higher the fault current available, the more tolerant the utility system will be to currents that may cause voltage flicker and/or harmonic voltage distortion.

Higher available fault current levels to the substation secondary will result from using larger capacity transformers, lower impedance transformers, or by operating the transformers in parallel. Careful evaluation must be made by the plant representatives to ensure that available fault levels, including contributions from the plant's motor loads, do not exceed the plant's primary and secondary system interrupting and momentary, close-and-latch equipment ratings. This analysis must be done for all normal and emergency system operation configurations. Refer to Chapter 2 regarding these types of evaluations and Chapter 4 for information on fault calculations.

Many utilities have voltage flicker standards. Such standards are intended to protect other utility customers because a plant may negatively impact the quality of power for other nearby utility customers. Flicker generally evolves from large inrush currents caused by starting large motors, metal melting, or welding operations. Typically these standards are established internally by the utility and are not usually approved by the utility's regulatory agency (for regulated utilities). However, utilities are also typically granted service rights by their regulatory agency with respect to the handling of plants that have caused utility system problems or service problems to other plants. Refer to Chapter 3 for more information on voltage flicker considerations.

Some utilities may also have telephone interference factor (TIF) standards, typically established in a manner similar to flicker standards. Again, these standards are intended to protect both the utility and the users.

While harmonic distortion concerns are justified, development of standards and applicable criteria are relatively new. Several aspects must be considered, including voltage distortion in the utility's supply; plant-load harmonic-current requirements; conditions under which to measure harmonic distortion (e.g., heavy and light load conditions, supply-line service status, power-factor-correction capacitor status, system-switching status, etc.); means of measurement (e.g., single-phase, three-phase, etc.); harmonic-system interactions; and various other related conditions. Refer to Chapter 9 and to IEEE Std 519-1992 [B11] for more information on harmonic considerations.

--`,,`,,`-`-`,,`,,`,`,,`---

Copyright The Institute of Electrical and Electronics Engineers, Inc.
Provided by IHS under license with IEEE
No reproduction or networking permitted without license from IHS Not for Resale

15.2.3.3 Short-circuit and protective-relaying coordination analysis

An analysis should be performed for normal and emergency-system operating configurations to determine the adequacy of new or existing equipment and to define the ratings necessary. A formalized and definitive study needs to be performed (refer to 15.3.4) to determine proper settings and time–current coordination.

The utility's protective-relaying scheme and its interface with the plant's protective-relaying scheme should be reviewed, including the following:

a) Utility's protective-relaying scheme for the substation: If a plant is fed by a loop system, plant personnel should understand utility requirements, if they exist, to automatically reclose plant breakers to test if a temporary line fault has cleared. Preferably, the utility can test the line for integrity from a remote breaker prior to re-closing plant breakers; thus, perhaps avoiding an additional unnecessary disruption. Manual reclosure is generally preferred for the plant's facilities because of simplicity in control requirements. Any automatic reclosing that may affect substation operations should be very carefully considered as it can impact the plant's operations and create system safety concerns. Typical utility protection requirements include line protection, bus protection, single- or dual-channel tripping, breaker-failure backup, and utility transformer protection.

   Protection of the plant system, including primary mains, ties, buses, and feeder cables, must coordinate with protection of the utility's high-voltage supply and transformers, whose protection is generally governed by utility policies.

b) Plant representatives should be provided with the specific requirements of the utility in cases where the plant relays must be coordinated with the utility relay system. These requirements include types of relays, terminations, connections, and other acceptable equipment.
c) Utility- and plant-control requirements for voltage, fault isolation, service restoration, and metering should be determined.
d) Careful evaluation should be made of the possible impact of the utility's relaying scheme on critical plant operation, especially if plant generation is involved. The utility's relaying scheme may have some objectives that are contrary to those of the plant management for its more critical operations.

Refer to Chapters 3 and 4, to IEEE Std 242-1986 [B8], and to IEEE Std 399-1990 [B9] for further discussions of short-circuit and protective coordination.

15.2.4 Specific considerations for substation facilities

There are many considerations related to building the substation facilities that need to be recognized but not necessarily resolved in the planning stage.

a) Location of the substation and rights-of-way on the plant site:
   1) In general, the plant management provides land to the utility at no cost.

Copyright The Institute of Electrical and Electronics Engineers, Inc.
Provided by IHS under license with IEEE
No reproduction or networking permitted without license from IHS Not for Resale

2) Entry and routing of utility lines
3) Location of the primary switchhouse (or switchgear enclosure), based on a balance between the costs of the plant's and the utility's facilities
4) Proper clearances from existing or future utility services, new building construction, or modification of existing buildings, fences, etc. (e.g., avoid overhangs of buildings, etc.) (IEEE Std 1119-1988 [B20])
5) Need for fire-protection barriers or clearances (IEEE Std 979-1984 [B15])
6) Minimizing interferences for plant land use, including future site development
7) Rebuilding an existing substation in lieu of opening a new site

b) Site determination and preparation requirements:
1) Topographical survey of the surrounding area
2) Clearing, leveling, and rough grading to standards acceptable to the utility
3) Soil tests to determine if the site is environmentally acceptable, and boring tests to determine if the soil will support the required loadings. Tests should be performed for the specific substation location recognizing associated requirements.
4) Seismic concerns (IEEE Std 693-1984 [B14])
5) Soil-resistivity measurement as required (IEEE Std 80-1986 [B6])

c) Location of equipment (if required), including the following:
1) Entrance towers for overhead lines
2) Entrance stands for underground lines
3) Circuit breakers
4) Disconnect switches
5) Grounding switches
6) Current and voltage transformers
7) Line-coupling capacitors and line traps
8) Lightning protection (including surge arresters)
9) Power transformers
10) Reactors (shunt or series)
11) Resistors/reactors (neutral)
12) Capacitors (shunt or series)
13) Buses
14) Metering facilities
15) Grounding grid
16) Control house
17) Fencing

d) Substation and supply-service electrical parameters, including considerations of the following aspects:
1) Selection of initial installed transformer capacity to allow for some reasonable load growth without additional changes (e.g., selection of a 24/32/40 MVA rated transformer or transformers to serve a load of approximately 24 MVA where the potential exists for the load to increase to some 30–40 MVA over time). Higher temperature transformer ratings (55 °C/65 °C rise) may be used to obtain some 12% additional capacity at little increase in equipment cost. The additional cost is usually minimal and it provides a greater safety margin in capacity. Refer to Chapter 10 and [B23] for more information.
2) Selection of transformers that are standard in specification and ratings to those typically used by the utility, if the plant organization is responsible for providing

Copyright The Institute of Electrical and Electronics Engineers, Inc.
Provided by IHS under license with IEEE
No reproduction or networking permitted without license from IHS Not for Resale

and installing them. Standardizing facilitates coordinating any future repairs, replacements, testing, use, and maintenance requirements with the utility.

3) Determination to use voltage control on the transformers. Typically, load tap changers (LTC) are used for new transformers. Substation regulators may be used for retrofitting small installations but are expensive, bulky, and can present maintenance problems. Therefore, their use is generally not desired if there is a choice.

4) Selection of transformer impedance(s) that are the utility standard or higher impedance units to limit fault current. Lower than standard impedance units may be used to address large welding or large motor-starting concerns. Refer to Chapter 10.

5) Determination of BIL (basic impulse insulation levels) for substation equipment, including transformer high- and low-voltage windings and station high- and low-voltage surge-arrester levels. The lightning activity in the area and environmental contamination (e.g., airborne pollutants) may dictate the need for higher BIL ratings. Refer to Chapter 4, Chapter 9, and [B26] for more information.

e) Space considerations in substation for primary and secondary power-factor-correction capacitors or harmonic filters (utility and/or plant owned), current-limiting reactors, and system neutral grounding resistors or reactors

f) Equipment delivery/removal access, loading, and clearances to the substation yard. Access considerations include rail, truck, and crane. Loading considerations include rail, roadway, and bridge load-bearing limits. Clearance considerations include overhead and side clearances and roadway/rail turn radius requirements. Provisions for equipment maintenance, repair, replacement, and station-expansion provisions are all required.

g) Future planning provisions in the substation, including the following:

1) Allowances for future expansion of the utility's service, the primary switchhouse, and the substation facility, including upgrading to larger-sized transformers. Considerations include provisions for adequate foundations, structural steel, and physical clearances, access, loading requirements, etc.

2) Allowances for any utility supply voltage conversion that might take place. Clearances, insulation levels, foundations, and access all should be taken into account.

h) Protection from exposure of the substation and utility facilities to plant or public vehicular traffic

i) Allowances for utility metering, communication, controls, and alarms for the substation yard.

j) Location, type, and ownership of batteries (dedicated or shared use by plant and utility) [B25]

k) Underground obstacles, such as water and sewer mains, storm water drains, steam services, electric services, or other obstacles

l) Environmental considerations related to the following:

1) Station physical configuration (profile, height, etc.)

2) Oil-spill controls and containment provisions and compliance with federal, state, and applicable local spill containment requirements for oil-filled electric

Copyright The Institute of Electrical and Electronics Engineers, Inc.
Provided by IHS under license with IEEE
No reproduction or networking permitted without license from IHS Not for Resale

devices (e.g., transformers, circuit breakers, capacitors, etc.) (IEEE Std 980-1987 [B16])
3) Proper station storm water drainage and runoff
4) Station noise and any other local zoning requirements or restrictions
5) Industrial or other known contamination that would affect insulators and outdoor switches (e.g., their location should not be downwind from open coal handling or cooling towers)
6) Bird, snake, and other animal protection and control requirements

m) Aesthetic considerations related to location, color, profile, and consistency with the design of existing or planned plant facilities
n) Adequate and legal authorization for land use (easement or license agreement) provisions, including rights-of-way from property belonging to other owners and necessary construction permits, and rights-of-way for the utility facilities and for the substation
o) Provisions for easy access to authorized personnel and restricted access to others
p) Connection arrangement from transformer(s) low-voltage bushings to the plant's switchhouse (e.g., outdoor bus, bus duct, underground or above ground cables, etc.). Refer to Chapter 12, Chapter 13, and IEEE Std 525-1987 [B12] for more information.
q) Grounding of the substation mat and the primary switchhouse and consideration of connecting the two. Refer to Chapter 7, IEEE Std 80-1986 [B6], and IEEE Std 142-1991 [B7] for more information.

15.2.5 Plant's primary switchhouse

The same considerations previously discussed regarding land use and availability apply equally well for the plant's primary switchhouse.

Specific additional considerations include the following:

a) Type of construction. Concrete, cement block, or prefabricated-type construction is generally preferred. Access can be easily restricted with this type of building to protect both the plant and utility equipment (if located in the plant's switchhouse) and the environment can be easily controlled and equipment maintained. In some cases, all equipment can be housed in metal-clad gear.
b) Provisions for equipment, such as the plant's primary metering, relaying, main buses, control transformer, main and bus tie circuit breakers, and the plant's primary feeder breakers. Requirements for obtaining metering information from the utility's facilities should be discussed.
c) Requirements for telephone, relaying, telemetry communications, and alarming provisions, including fault isolating equipment
d) Provisions to restrict access to plant's switchhouse and to provide space in the switchhouse for utility controls and related equipment accessible only to utility personnel
e) Consideration for special ambient air treatment requirements due to unusual environmental circumstances, such as airborne contamination or ambient temperatures above equipment ratings. Elevations higher than equipment ratings may also need to be considered.

Copyright The Institute of Electrical and Electronics Engineers, Inc.
Provided by IHS under license with IEEE
No reproduction or networking permitted without license from IHS Not for Resale

f) Access for the addition, removal, or replacement of equipment. A roll-up door or removable panels are options.
g) Construction and maintenance power receptacles (120/240 V)
h) Provisions for future expansion to meet the ultimate plant load
i) Space provisions for maintenance and testing equipment

15.2.6 Facility and substation ownership

The ownership demarcation between the utility and the plant should be determined. Specific ownership of the substation and associated equipment may be a complicated issue that may be determined by a number of conditions and factors. The chief considerations are the rate structure and operating philosophy of the utility, the operating philosophy and return on capital of the plant owner, and the particular situation that may determine such policies. Once all these factors are considered, ownership and lines of demarcation can be determined.

The ownership point may vary for utility-owned substations. The transformer low-voltage bushings or low-voltage terminations at the plant's switchhouse are typical points of ownership demarcation. Figure 15-2 indicates some of the various ownership boundaries for a typical substation configuration.

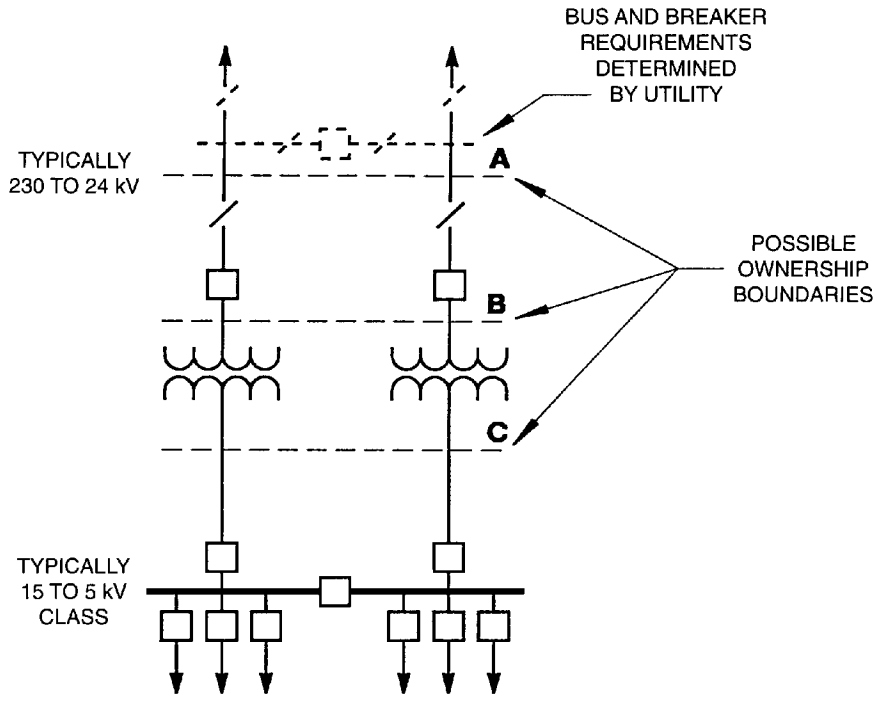

Figure 15-2—Typical industrial substation one-line diagram showing possible ownership boundaries A, B, or C

Copyright The Institute of Electrical and Electronics Engineers, Inc.
Provided by IHS under license with IEEE
No reproduction or networking permitted without license from IHS
Not for Resale

Should the utility provide the option of ownership to the plant, the plant management should then consider various other factors to determine the best course of action.

High-voltage rates (tariffs) should be carefully evaluated if they are available. In this case, the economic advantage gains from the rates should be evaluated against the added cost of substation ownership, including capital, operation and maintenance, and repairs. These costs should be compared to the utility's policies to provide an equivalent substation and any financial requirements that the plant management might still be responsible for paying to the utility for some or all of the facilities. In some cases, the plant management may have an option for payment, depending on utility policies and tariff. The utility tariff should be carefully scrutinized in this regard. In some cases, arrangements can be made with the utility to perform the necessary maintenance, operation, and repairs at a reasonable cost.

There are specific issues associated with substation ownership that the plant management should understand and resolve. These include design and construction of the substation (if performed by plant representatives), economic savings obtained from high-voltage rates, maintenance, operations, and switching, especially for high-voltage equipment, substation repairs, and any potential future substation capacity expansion requirements.

Insurance coverage is commonly provided by the plant and the utility for their respective facilities as part of their normal course of doing business. If plant substation ownership is involved, the plant management must include insurance for the facility.

In the case where underground duct systems are involved, ownership can change at a manhole on either side of the plant's property line. Splices inside the manhole may or may not be the utility's responsibility. The cable and ducts connecting to the substation may or may not be the customer's responsibility, generally depending upon the voltage level. Cable termination at the substation may or may not be the plant's responsibility. The delivery voltage level may also determine the point of ownership change.

The ownership point issue may also vary for customer-owned substations. In this case, possible change of ownership may be at a termination of utility services at towers near the plant's property line, at the plant's substation property line, or at the high-voltage terminations in the plant's substation yard at either the high-voltage breakers or the transformer high-voltage bushings. Since the high-voltage protective devices in the yard may be an integral part of the utility's transmission system, utilities may often retain ownership and control of this equipment. In this case, the ownership point may be at the transformer high-voltage bushings. In some cases, partitions in the substation yard may be required to separate areas of ownership for security and safety reasons.

15.2.7 Substation operation and maintenance

The plant management should resolve responsibility for performing the substation maintenance, calibration, operation, repair, and periodic tests in the case of a customer-owned station. These requirements, particularly those involving calibration, testing, and repair, should be performed by personnel experienced in high-voltage equipment, practices, and safety. Most often, such requirements are beyond the plant's personnel resources. The utility may be

Copyright The Institute of Electrical and Electronics Engineers, Inc.
Provided by IHS under license with IEEE
No reproduction or networking permitted without license from IHS Not for Resale

willing to provide such services at a nominal cost, or a qualified high-voltage contractor (specialized in electrical testing) may be hired to perform such work.

15.2.8 Administrative considerations

Administrative and policy requirements contained in the utility's approved tariff, standard terms and conditions, and service rules should be carefully reviewed with the utility. The particular issues reviewed should include substation design, construction, maintenance and ownership responsibilities, financial requirements, and the plant's options (if any) with respect to any financial requirements and payment options.

These policies vary by utility and may be highly defined or quite vague. Cooperative negotiation should be pursued to resolve issues of concern.

15.2.9 Time requirements

A typical substation project can be developed and engineered, and have equipment purchased, installed, and energized, in approximately two years. This schedule includes allowances of six months for planning; six months for basic engineering and specification preparation; twelve to fourteen months for bid inquiry, major equipment purchase, fabrication, and delivery; and some three to six months for construction, starting some two to three months before major equipment delivery. It should be recognized that if line construction on public or private property is required for the service, additional time could be required to obtain the necessary rights-of-way. Refer to Figure 15-3 for a sample of a typical schedule.

15.2.10 Finalizing conceptual planning requirements

The planning stage should conclude with the resolution and definition of the following aspects:

a) Agreement on a preliminary single-line diagram, equipment plot-plan, project schedule for the required facilities, and relaying system configuration. Basic equipment ratings should be indicated on these drawings.
b) Resolution of ownership requirements with a definition of the "utility" and the "plant" portions of the facility
c) Agreement in the areas of facility responsibility related to design, construction, operation, maintenance, repairs, etc.
d) Preliminary review of the conceptual plans by utility and plant design and operating personnel to ascertain that conceptual planning criteria and scope are consistent with all design and operating requirements
e) Agreement on the administrative requirements related to contractual and financial responsibilities (including construction and operating budgets)

15.2.11 Contract

Resolution of the items in 15.2.10 above will lead to the contract between the plant and the utility signifying the end of the planning stage and start of the design stage.

Copyright The Institute of Electrical and Electronics Engineers, Inc.
Provided by IHS under license with IEEE
No reproduction or networking permitted without license from IHS Not for Resale

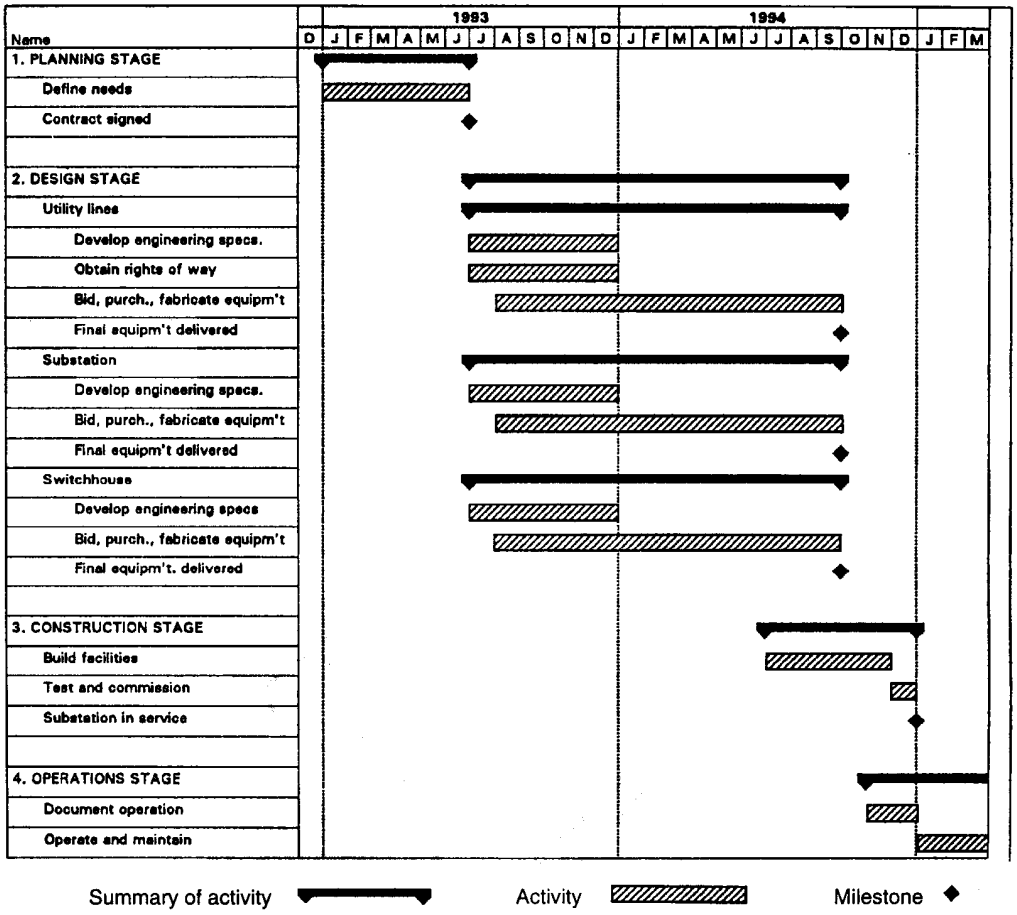

Figure 15-3—Illustration of overall project schedule for an industrial substation

15.3 Design stage

This stage is the detailed follow-up to all previous work in the planning stage. While industrial plant substations are often designed and built by the utility, in certain cases the plant management may be required or may be allowed the option to design and build the substation. In such cases, the plant representatives then perform most of the functions indicated here for the utility, although the utility personnel will probably review and approve certain aspects related to the interconnection and protective relaying with its system.

The design stage starts by using the preliminary single-line diagram developed and agreed upon in the planning stage. From this and other related design parameters developed in the planning stage, detailed design and engineering drawings and specifications, along with construction cost estimates (see Chapter 16), are developed.

Copyright The Institute of Electrical and Electronics Engineers, Inc.
Provided by IHS under license with IEEE
No reproduction or networking permitted without license from IHS
Not for Resale

15.3.1 Detailed schedule

A detailed engineering design and construction schedule should be prepared in this phase, based on the preliminary schedule prepared in the planning stage.

15.3.2 Site testing

Site testing should be done (at locations specified by the substation designer) to determine the load-bearing strength of the ground. While preliminary testing can be performed at an early stage, it is more useful if a plot plan layout is available and equipment weights are known. This testing is generally performed by specialized soil boring and test companies. Soil boring companies can take sufficient test borings to determine the design parameters for foundations needed for the utility's incoming towers, circuit breakers, transformers, and the plant's primary switchgear building. Land that has been filled even 15 or 20 years ago may not have developed sufficient load-bearing capabilities; installing caissons or piles to support the foundations may be necessary, especially for a large substation.

If the ground has been used for other purposes, such as a waste disposal site, or contains fill of unknown origin, it is necessary to take soil samples and have them analyzed and certified to be non-hazardous and non-toxic, although this is often performed as a matter of policy regardless of any identified previous site use.

Test of soil resistivity should be conducted by a qualified electrical contractor in accordance with Chapter 7 of this standard and the utility's practices.

15.3.3 Site design

Since site selection has been determined in the planning stage, the following design factors now can be addressed.

The final substation grade should be flat with only enough grade for water to drain naturally from the plant's switchgear, building, and substation area. If regrading becomes necessary, areas must be filled using clean structural fill that can be properly compacted in layers of 6–12 in. All foundations, basement, and duct banks should preferably be poured before the backfilling is started. Scraping soil from the high spots and dumping it at the low spots is not recommended since correct soil properties required for good compaction may not then exist.

Most industrial substations do not require a sanitary sewer system or a potable water supply as such facilities are typically accessible nearby at the plant. The substation owner has responsibility for ensuring that the roof and the area around the plant's substation building are properly drained to prevent water or ice buildup. If the substation has an associated basement or cable vault, the foundation must have drains and possibly sump pumps to prevent any unwanted water buildup around the footings. Basement sumps are also advisable to carry away any seepage from around the incoming cables. If a storm sewer system is not available, it may be necessary to provide an area to dispose of the drain water.

Copyright The Institute of Electrical and Electronics Engineers, Inc.
Provided by IHS under license with IEEE
No reproduction or networking permitted without license from IHS Not for Resale

The area around oil-filled transformers and other equipment (i.e., circuit breakers, capacitors, etc.) should be constructed in such a way that will contain leaks. The system must be designed to contain the oil but at the same time allow rainwater to drain naturally and freely away. If the water and oil can be drained or pumped to the industrial sewer system, many problems are eliminated (IEEE Std 980-1987 [B16]). However, it may be necessary to construct an American Petroleum Institute (API) separator with oil skimmers for that rare occasion when a transformer develops a major leak. Some containment systems retain all the rainwater until an operator temporarily opens a bottom drain to dispose of the water. In other cases, special absorption beads may be used in containment-area reservoirs, which allow water to pass under normal conditions but swell upon oil contact to choke-off all fluid flow when spills occur. In any case, these requirements are subject to local law or statute and are typically the responsibility of the substation owner.

A layer of crushed limestone helps support vehicles and provide high resistance critical to providing safe step-and-touch potential. It is also helpful for drainage, helps reduce ice accumulation, and prevents small animals from readily digging under the fence.

Landscaping and visual or acoustical screening may be required to maintain consistency with the design approach of the industrial plant. In most cases, this is a minimal requirement. Such requirements may be more pronounced for certain “high-tech” plant facilities, such as computer or electronics plants. In some cases, a low-profile substation configuration may be required (IEEE Std 605-1987 [B13], IEEE Std 1127-1990 [B21]).

Animal screening is usually adequate if the area is well fenced and the ground within the fence and several feet beyond the fence is heavily stoned. There may be state or local requirements for particular screening requirements in certain locations.

Airborne contamination in an industrial plant may be a serious problem and may require cleaning the transformer(s) or switch insulators on a regular basis or after an unplanned emission from a plant process. Sufficient space must be allowed around the substation to bring the cleaning equipment close enough to the equipment. If major releases of contaminant’s are possible, additional protection may be obtained by specifying a higher BIL for all outdoor insulators. The higher BIL will give a longer creepage path and a greater effective resistance when partially contaminated. Special insulator coatings may also be applied to maintain BIL in contaminated areas.

15.3.4 Relaying and control design

The installation of a dedicated substation to serve a plant inherently involves an interface between the utility and the plant. Close coordination between utility and plant personnel is essential so that relaying, control, and other related requirements are identified and proper responsibilities assigned. This may include requirements that the plant provide equipment or space for the utility’s relaying, control, metering, data acquisition, and other related equipment.

There are three general areas where protection requirements must be coordinated to ensure a safe and reliable system:

Copyright The Institute of Electrical and Electronics Engineers, Inc.
Provided by IHS under license with IEEE
No reproduction or networking permitted without license from IHS Not for Resale

a) *Utility supply line protection*. Typically, line faults may be detected and isolated using overcurrent, distance, pilot wire, or differential relaying protective techniques. Several factors influence the choice of line protection, including circuit type (e.g., underground cable, overhead line, single circuit, parallel circuit, multi-terminal lines, etc.) and the line's function and importance (e.g., impact on service continuity and the amount of time needed to detect and isolate faults). As a practical matter, the line(s) supplying the substation are part of a larger utility system and the applicable line protective relaying scheme(s) are usually selected by the utility for compatibility and coordination with other protective devices upstream from the substation within the utility system. It is important to understand that the utility scheme used may well impact plant operations. Any conflicts in objectives between the utility protective scheme and maintenance of critical plant operations should be resolved. Refer to Chapter 5, IEEE Std 242-1986 [B8], and IEEE Std 1001-1988 [B17] for various viewpoints on protection of incoming lines.

b) *Transformer protection*. The protection schemes for transformers depend on several factors, including system configuration, method of grounding, speed, coordination, operation, cost, etc. Some of the more commonly used protective schemes for industrial substation transformers are shown in figures 15-4 through 15-7.

Figure 15-4 shows how a primary breaker can be used for transformer protection. The basic protection is provided by the 87T transformer differential relays. Device 50/51, overcurrent relay with instantaneous unit, provides primary protection for phase faults; either Device 50G or 50N/51N can be used as backup protection for ground faults. Transformer overload, low-voltage bus, and feeder backup protection is provided by Device 51 on the secondary side. Since the low-voltage side is resistance-grounded, a ground relay (51G-1) should be used to trip Breaker 52-1 for low-side ground faults between the transformer and the secondary breaker and for resistor thermal protection. Device 51G-2, which trips Breaker 52-11, provides bus ground-fault protection and feeder ground backup, while Device 63 offers highly sensitive detection of low-magnitude transformer faults. Devices 50/51, 51, 51G-1, 50G, and 51G-2 require coordination to provide zones of protection, which will aid in fault location.

When a normally closed secondary bus tie is used for paralleled transformer protection (figure 15-5), there are several differences from the primary breaker scheme shown in figure 15-4. First, Device 87TG provides selective and sensitive protection for ground faults within the secondary circuit of the differential zone. In addition to Devices 51G-1 and 51G-2 shown in figure 15-4, a 51G-3 relay is used to trip Breaker 52T on ground faults. The trip sequence of these three ground relays is as follows: (1) 51G-3 Trips 52T, (2) 51G-2 Trips 52-11, (3) 51G-1 Trips 52-1, and (4) 87TG Trips 52-1 and 52-11. Device 67 provides directional overcurrent protection.

If the transformer size does not warrant the basic schemes described above, the schemes shown in figures 15-6 and 15-7 may be used. Here, fuses provide the primary fault protection. Solid grounding will assure sufficient primary phase fault current to operate the fuses for most secondary ground faults. In cases where secondary ground faults do not produce enough fault current to blow primary fuses, a 51G relay may be used to trip a high-speed ground switch, as shown in figure 15-6. The opening

Copyright The Institute of Electrical and Electronics Engineers, Inc.
Provided by IHS under license with IEEE
No reproduction or networking permitted without license from IHS Not for Resale

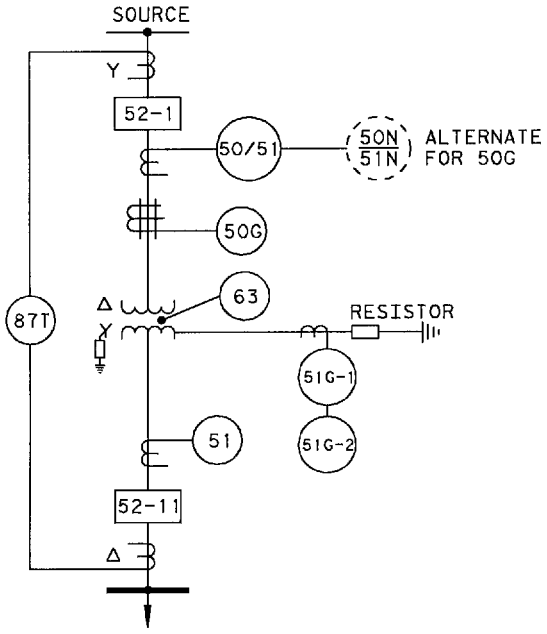

RELAY DEVICE NUMBER	DEFINITION
50	INSTANTANEOUS OVERCURRENT
51	A C TIME OVERCURRENT
63	SUDDEN PRESSURE
67	A C DIRECTIONAL OVERCURRENT
87	DIFFERENTIAL
N	NEUTRAL
G	GROUND
T	TRANSFORMER
	SUFFIX NUMBERS IDENTIFY SEPARATE RELAYS OF SAME TYPE

Legends for figures 15-4 and 15-5

Figure 15-4—Transformer protection with primary breaker (no load or metering circuits shown)

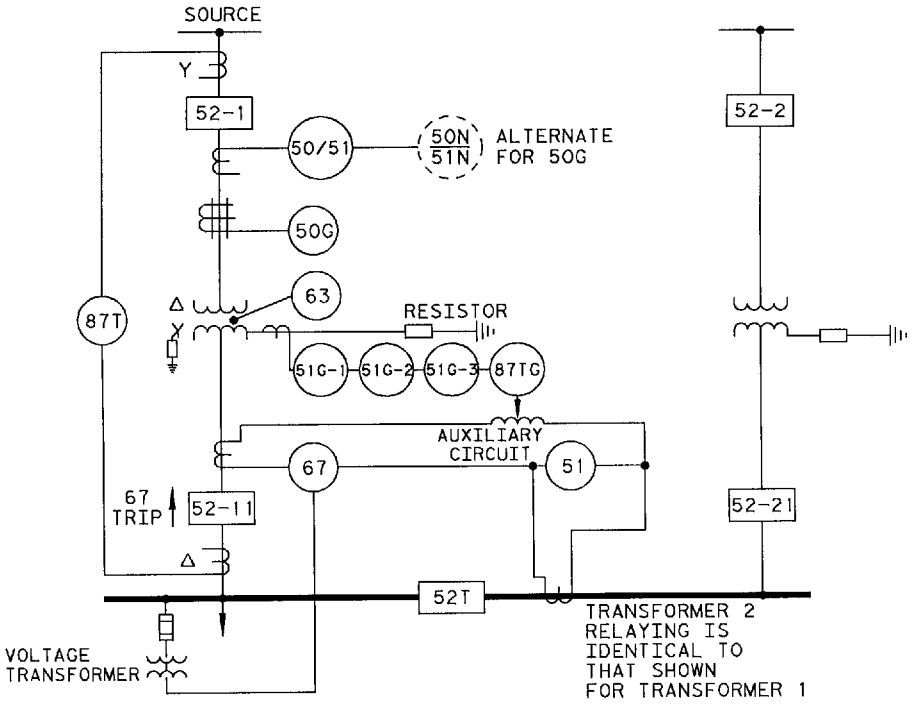

Figure 15-5—Paralleled transformer protection with primary breaker (no load or metering circuits shown)

Copyright The Institute of Electrical and Electronics Engineers, Inc.
Provided by IHS under license with IEEE
No reproduction or networking permitted without license from IHS
Not for Resale

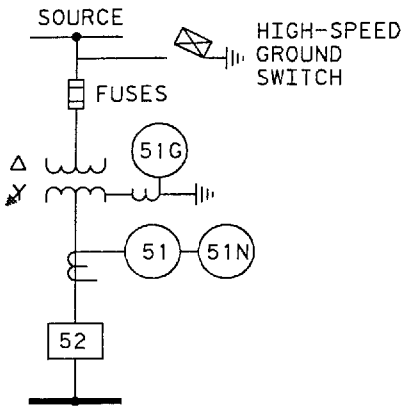

RELAY DEVICE NUMBER	DEFINITION
51	A C TIME OVERCURRENT
67	A C DIRECTIONAL OVERCURRENT
N	NEUTRAL
T	TRANSFORMER
G	GROUND

Legends for figures 15-6 and 15-7

Figure 15-6—Transformer protection with primary fuses (no load or metering circuits shown)

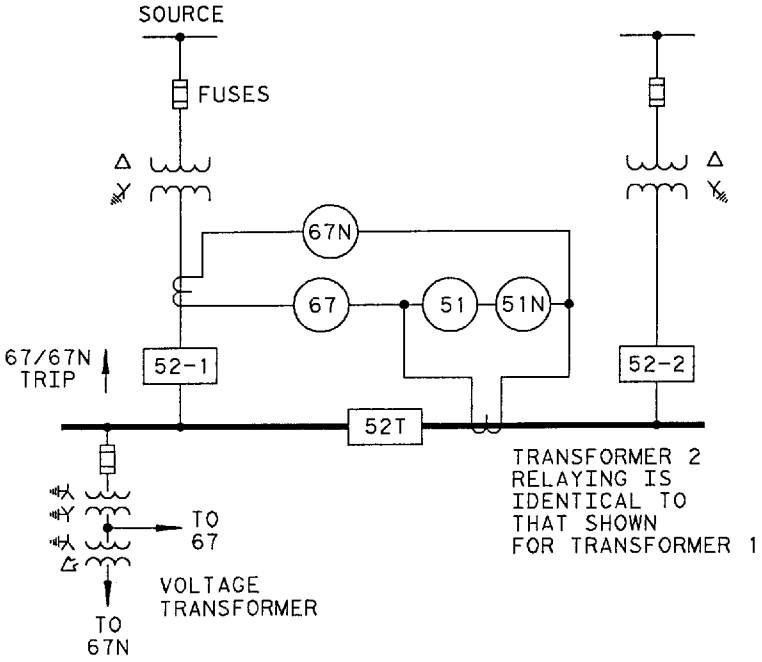

Figure 15-7—Paralleled transformer protection with primary fuses (no load or metering circuits shown)

Copyright The Institute of Electrical and Electronics Engineers, Inc.
Provided by IHS under license with IEEE
No reproduction or networking permitted without license from IHS
Not for Resale

of a single primary fuse will result in single phasing of the transformer secondary system. This may be difficult to detect, particularly at light loads, and appropriate precautionary measures should be taken. If the utility source is grounded and there is a power source on the secondary side, a ground fault on the incoming line will be interrupted by the utility breaker. The secondary breaker, however, will not be relayed open because no ground-fault current will flow through the delta primary transformer connection. Failure of the secondary breaker to open can result in hazards to personnel, possible damaging transient overvoltages produced by an arcing-type fault, and prevention of automatic reclosing of the utility breakers. Several schemes can be used to ensure opening of the secondary breaker, including pilot protection of the incoming line, transfer-trip, reverse-power relaying, or potential ground-detection-relaying schemes on the transformer primary. The utility will prevent automatic reclosing of its breaker if the plant's secondary breaker is not open.

Note that certain fusible switches are available that will automatically open all three phases should a fuse melt on single-phase.

In some cases, it is appropriate to specify Type 60, voltage or current balance/ negative sequence, relay protection on the secondary of transformers with fused primaries to provide single-phase protection.

When a normally open bus tie is used, as in figures 15-5 and 15-7, Devices 67 and 67N are not required.

Where transformers with no high-side breakers are applied as part of a line section, transfer tripping or the application of high-speed ground switches or circuit switchers operated by the transformer protective relays may be used for transformer protection. With a high-speed ground switch, a ground fault is initiated on the transmission line near the transformer location, provided that there is adequate fault current for the remote ground relays to trip the remote breaker and isolate the faulted transformer. This system is slower but is widely used and is fairly simple and straightforward. It does not require any secure communication medium. For this type of application, the remote ground relays can be set to operate for 100% of the line and not overreach the low-side bus at the transformer location. The use of high-speed ground switches is not desirable where power quality is a major concern.

c) *Plant main bus and feeder protection*. Plant main bus protection may be provided by overcurrent or differential protection schemes. Overcurrent protection should be coordinated with that provided for transformer protection. When applied for bus protection, the partial differential scheme is most commonly used for protection of plant main buses. In this scheme, only the source circuits are differentially connected, using an overcurrent relay with time delay. The relays protecting the feeders or circuits are not in the differential. Essentially, this arrangement combines time-delay bus protection with feeder backup protection.

Where some or all of the feeder circuits have current-limiting reactors, a partial-differential circuit is used with distance-type relays. These distance-type relays are set into, but not through, the reactor impedance. The reactor impedance is used to select between faults on the bus and external faults on the feeders. The scheme is both fast and sensitive.

Copyright The Institute of Electrical and Electronics Engineers, Inc.
Provided by IHS under license with IEEE
No reproduction or networking permitted without license from IHS Not for Resale

Feeder circuits are almost universally protected with time overcurrent relays for both phase and ground-fault protection. Ground-fault relaying may be connected in the residual circuit of the current transformers or may be connected to zero sequence (toroidal-type) current transformers.

Prior to specification of equipment, short-circuit and protective-device coordination studies must be performed. The coordination effort is intended to produce a complete record of protective-device ratings and settings and suitable time–current curves, etc., to ensure proper and coordinated operation of all protective devices with the utility supply and for plant system faults. For more discussion, see Chapters 4 and 5, [B2], [B22], [B24], and Chapter 15 of IEEE Std 242-1986 [B8].

15.3.5 Primary switchhouse

Where a plant's switchhouse is required, it should be developed in conjunction with the substation arrangement and configuration since it is an equally important integral part of the service facility. The switchhouse contains the plant's primary switchgear, main bus, and related equipment.

The switchhouse is typically located adjacent to the substation switchyard on the low-voltage side of the primary transformers in order to minimize expense associated with the low-voltage bus or cable connections from the transformer secondary to the plant's primary main breakers. The switchhouse is generally provided with heating, lighting, and ventilation services (or air conditioning) and with locked access to restrict entry to authorized personnel.

For utility-owned substations, the utility will most likely require space in the plant's switchhouse for utility metering, station controls and batteries, data acquisition and monitoring, and protective relaying. This is often accomplished by partitioning a section of the switchhouse from the plant's portion and restricting access to that section to the utility. Details need to be coordinated early so adequate space allowances are made.

15.3.6 Drawing approvals

The utility will probably require that specifications and drawings for all of the plant's primary equipment and relaying that is an integral operating part of the utility grid be submitted to the utility for its approval before equipment purchase by the plant representatives. Carefully prepared specifications and an approved vendor list that meets with utility approval will increase the chance that the equipment selected is acceptable to the utility. The utility should identify its areas of responsibility with respect to the plant's system and indicate which related manufacturer's drawings they wish to review for both the preliminary and final designs. The utility should send copies of substation drawings, especially the grounding drawings and relay schematics, to the industrial plant representatives, who may need to review them for certain interface items.

--`,,`,,`-`-`,,`,,`,`,,`---

Copyright The Institute of Electrical and Electronics Engineers, Inc.
Provided by IHS under license with IEEE
No reproduction or networking permitted without license from IHS Not for Resale

15.4 Construction stage

15.4.1 Project management

Although industrial plants may not have the in-house or resident engineering resources for all planning and design tasks, the plant management should provide a project manager to oversee the plant's responsibilities and to provide coordination between the plant, the utility, and the engineering consultant.

Periodic meetings between the various parties are recommended during the construction stage to ensure proper coordination and to ensure that all problems and concerns that arise are promptly addressed and resolved.

15.4.2 Inspection during construction

In the utility-owned portion of a substation, the utility will, of course, have major inspection responsibilities. In the plant-owned portion of a substation, the utility will have relatively little concern with the construction phase, except to periodically review the construction schedule to determine if the project is on time, and to make sure plant crane or digging operations do not take place too close to utility power lines. It is the responsibility of the plant representatives and the engineering contractor to inspect and make reasonable checks of the major equipment during manufacture and factory testing to assure that the product is delivered consistent with specifications. Some utilities may choose to witness the high-voltage equipment performance test, although certified test results are usually sufficient.

15.4.3 Final testing

The plant's construction contractor should have responsibility for installing all the equipment as defined by the drawings and scope of work. The contractor is then responsible for checking all connections in the wiring between units. Verification that the contractor has correctly interpreted the drawings and that the drawings are correct should be done by an outside testing company or engineering consultant that has experience testing high-voltage substations (IEEE Std 510-1983 [B10]).

For utility-owned transformers, the plant representatives may want to witness final testing. For plant-owned transformers, the plant representatives, along with the plant's technical consultant, should witness and verify all final tests.

The utility will require, as part of its acceptance review, which tests and/or calibrations it plans to witness. Calibration and setting data must be provided in sufficient time for proper review by the utility. The testing or commissioning contractor should be involved in the project to witness the general contractor continuity test.

Final tests should, at a minimum, include the following:

a) Transformer and switchgear polarity tests on potential and current transformers. For multiple taps on current and voltage transformers, a determination that the proper

--`,,`,,`-`-`,,`,,`,`,,`---

Copyright The Institute of Electrical and Electronics Engineers, Inc.
Provided by IHS under license with IEEE
No reproduction or networking permitted without license from IHS Not for Resale

taps are selected and the unused connections are properly secured. All current and potential circuits should be suitably tested to verify continuity, proper phasing, and polarity, and grounding.

b) Calibration and testing of all relays, timers, trip circuits and closing circuits, etc. These tests should be possible since control voltage is available from the station battery. Voltage-sensitive relays may be tested separately, and it may be necessary to block or bypass this control until the station is on-line.

   Protection systems tests may include the following:

   1) Remote trips to and from the utility
   2) Line trips back toward the utility
   3) Transformer differentials, sudden pressure relays, ground backup and step (time-delay) tripping
   4) Breaker failure
   5) Trip and close modules
   6) Tie breaker controls
   7) Reactor shorting controls
   8) Automatic reclosing controls
   9) Bus-differential and bus-backup tripping

c) Operation of all primary disconnect switches and circuit breakers. Air break switches and grounding switches should be carefully checked for contact and alignment.

d) Resistance of the ground loop to a remote ground. Refer to Chapter 7 for more information.

e) Ratio test on power transformer at all tap changer settings. Set fixed taps to requirements.

f) Insulation power factor on power transformers

g) Complete transformer oil tests

h) High-potential dc tests on cables (IEEE Std 510-1983 [B10])

15.4.4 Plan for energizing

After all the relays and circuits are tested and the proper settings made, the utility may wish to review the test results unless they have already witnessed the testing. At this point, the utility and plant representatives should prepare a schedule or sequential plan for energizing the substation.

Typical steps for station energizing include the following:

a) Locking out incoming switch or circuit breaker.

b) Connecting incoming lines to utility system. This connection will probably require an outage by the utility.

c) With transformer secondary and feeder breakers open, closing the primary switch or breaker. This operation should be repeated several times to assure that good contacts are made.

--`,,`,,`-`-`,,`,,`,`,,`---

Copyright The Institute of Electrical and Electronics Engineers, Inc.
Provided by IHS under license with IEEE
No reproduction or networking permitted without license from IHS Not for Resale

d) Checking secondary voltage and set automatic tap changer (if applicable). Verify correct phase rotation.

e) Closing transformer secondary main breaker to energize bus.

f) For dual source substations, checking phasing across tie breaker and all lock out and transfer schemes.

g) The substation will be ready to receive load after the usual equipment no-load waiting period recommended by most manufacturers.

h) Upon application of load, verifying and recording currents in the protective relaying circuits.

15.5 Operating stage

This stage involves the planning for the operation and maintenance of the station and the documentation of all required tests, inspections, calibration, and coordination data necessary for proper station operation. Operation and maintenance plans should be prepared and available before the substation is placed in service.

15.5.1 Operating requirements

Even if the utility does not own and cannot maintain the substation, their typical substation operating and maintenance practices and procedures manuals for their similar or equivalent substations should be reviewed and used as a basis, as appropriate, for developing applicable procedures. These utility practices can provide invaluable guidance to an outside contractor that may be hired to perform the maintenance work and prepare the operating and maintenance manuals for the substation. The operating data involved includes the test results for final station testing, relay and protective service settings, station operation and switching procedures, normal and emergency operating conditions, repairs, switching conditions, and an operational record of the substation commissioning.

Occupational Safety and Health Administration (OSHA) regulations should be considered, since it may be that the utility's practices are not allowable on an industrial system due to differing governmental regulations.

15.5.2 Documentation

The operational sequence, operation and maintenance procedures, practices, conditions, and schedules are generally compiled in the operation and maintenance manual for the station. This manual outlines the various tests and inspections, and their frequency, equipment repairs, and other work to be performed for the periodic maintenance of the substation.

A sufficiently detailed description of the protective-device sequence of operation should be included in the manual. This should include the utility's supply protective-device operation, interconnections with the plant protective devices, and the plant's protective devices.

Copyright The Institute of Electrical and Electronics Engineers, Inc.
Provided by IHS under license with IEEE
No reproduction or networking permitted without license from IHS Not for Resale

Generally, for plant-owned substations, a third party is contracted to perform substation maintenance work since most industrial plants lack the resources and experience to properly maintain high-voltage equipment. This third party may be an independent high-voltage electrical testing contractor, or the utility may be hired to perform the work. The substation maintenance work is generally based on the inspection and maintenance performed by the utility for its own similar substations and/or recommendations from the independent contractor hired to perform the work if the utility cannot or will not perform it.

This maintenance program typically entails a one-time inspection of the entire substation, thereby establishing a baseline reference for periodic checks and inspections. This one-time inspection should include fencing; structure steel; electrical equipment; foundations; checks on all liquid and gas pressures, levels, and temperatures; fluid and gas sampling of all liquid-filled equipment; various operation tests as applicable; protective relaying; thermographic surveys; and electric equipment tests. A program of periodic checks and inspections is then developed, which includes routine daily, weekly, quarterly, and annual inspections and other less frequent routine inspections, such as those of relaying, circuit breakers, transformers, and infrared equipment.

A recommended spare-parts inventory should be developed for the station. The equipment and parts should be purchased as part of the original purchase contract and maintained on hand to take care of any unforeseen emergency problems. Specific spare-part recommendations are dependent upon the substation configuration and local operating practices and experiences. The plant's utility can generally provide specific recommendations and suggestions based upon its operating experience. An independent high-voltage electrical testing contractor that might be retained to perform maintenance work on the station can also provide recommendations. The typical spare parts maintained might include such items as close-and-trip coils for high-voltage circuit breakers, high- and low-voltage surge arresters for the station, and items for the primary transformers, such as high- and low-voltage bushings, valve sockets, stationary, moveable LTC contacts, control fuses, and spare batteries.

15.6 Bibliography

[B1] Accredited Standards Committee C2-1993, National Electrical Safety Code.

[B2] *Applied Protective Relaying,* Relay Instrument Division, Westinghouse Electric Corporation, Newark, NJ, 1976.

[B3] Beeman, D., editor, *Industrial Power Systems Handbook*. New York: McGraw Hill, 1955.

[B4] Fink, D. G., and Beaty, H. W., *Standard Handbook for Electrical Engineers,* 12th edition. New York: McGraw Hill, 1987.

[B5] Hornak, D., and Zipse, D., "Automated Bus Transfer Control for Critical Industrial Processes," *IEEE Transactions on Industrial Applications,* Sept./Oct. 1991.

Copyright The Institute of Electrical and Electronics Engineers, Inc.
Provided by IHS under license with IEEE
No reproduction or networking permitted without license from IHS Not for Resale

[B6] IEEE Std 80-1986 (Reaff 1991), IEEE Guide for Safety in AC Substation Grounding (ANSI).

[B7] IEEE Std 142-1991, IEEE Recommended Practice for Grounding of Industrial Commercial Power Systems (IEEE Green Book) (ANSI).

[B8] IEEE Std 242-1986 (Reaff 1991), IEEE Recommend Practice For Protection and Coordination of Industrial and Commercial Power Systems (IEEE Buff Book) (ANSI).

[B9] IEEE Std 399-1990, IEEE Recommended Practice for Industrial and Commercial Power Systems Analysis (IEEE Brown Book) (ANSI).

[B10] IEEE Std 510-1983 (Reaff 1992), IEEE Recommended Practices for Safety in High-Voltage and High Power Testing.

[B11] IEEE Std 519-1992, IEEE Recommended Practices and Requirements for Harmonic Control in Electric Power Systems.

[B12] IEEE Std 525-1987, IEEE Guide for Design and Installation of Cable Systems in Substations (ANSI).

[B13] IEEE Std 605-1987 (Reaff 1991), IEEE Guide for Design of Substation Rigid-Bus Structures (ANSI).

[B14] IEEE Std 693-1984 (Reaff 1991), IEEE Recommended Practices for Seismic Design of Substations (ANSI).

[B15] IEEE Std 979-1984 (Reaff 1988), IEEE Guide for Substation Fire Protection (ANSI).

[B16] IEEE Std 980-1987, IEEE Guide for Containment and Control of Oil Spills in Substations (ANSI).

[B17] IEEE Std 1001-1988, IEEE Guide For Interfacing Dispersed Storage and Generation Facilities With Electric Utility Systems (ANSI).

[B18] IEEE Std 1100-1992, IEEE Recommended Practice for Powering and Grounding Sensitive Electronic Equipment (IEEE Emerald Book).

[B19] IEEE Std 1109-1990, IEEE Guide for the Interconnection of User-Owned Substations to Electric Utilities.

[B20] IEEE Std 1119-1988, IEEE Guide for Fence Safety Clearances in Electric-Supply Stations (ANSI).

[B21] IEEE Std 1127-1990, IEEE Guide for the Design, Construction, and Operation of Safe and Reliable Substations for Environmental Acceptance (ANSI).

Copyright The Institute of Electrical and Electronics Engineers, Inc.
Provided by IHS under license with IEEE
No reproduction or networking permitted without license from IHS Not for Resale

[B22] IEEE Circuit Breakers, Switchgear, Substations, and Fuses Standards Collection, 1993 Edition (C37).

[B23] IEEE Distribution, Power, and Regulating Transformers Standards Collection, 1992 Edition (C57).

[B24] IEEE Protective Relaying Systems Standards Collection, 1991 Edition.

[B25] IEEE Stationary Battery Standards Collection, 1991 Edition.

[B26] IEEE Surge Protection Standards Collection, 1992 Edition (C62).

[B27] Martzloff, F. D., and Gruzs, T. M., "Power Quality Site Surveys: Facts, Fiction, and Fallacies," *IEEE Transactions on Industry Applications,* Nov./Dec. 1988.

[B28] Wagner, V. E., Andreshak, A. A., and Staniak, J. P., "Power Quality and Factory Automation," *IEEE Transactions on Industry Applications,* pp. 620–626, July/Aug. 1990.

Copyright The Institute of Electrical and Electronics Engineers, Inc.
Provided by IHS under license with IEEE
No reproduction or networking permitted without license from IHS Not for Resale

Chapter 16
Cost estimating of industrial power systems

16.1 Introduction

An important stage in planning to meet a plant's power requirements is the preparation of a cost estimate. A cost estimate is required for determination of necessary funding and to help decide if the project is economically feasible. Proper estimates also entail an economic comparison of alternate system arrangements to meet the plant power requirements for the most economical investment in the electrical system. The purpose of this chapter is to present a method for making a capital cost estimate for a typical industrial plant power distribution system.

System cost, while important, is but one of several factors to be considered in planning the most suitable distribution system. Consideration must be given to the concept of *total cost*, or *true cost*. This requires weighing the first cost of the equipment plus other costs for improved reliability, ease of maintenance, safety, replacement parts, and performance. Useful information concerning cost versus reliability analysis can be found in Chapter 7 of IEEE Std 493-1990 [B1].[1] Additional factors, such as tax considerations, utility rates, operational economies, and provision for future improvements in the manufacturing process, are critical in the evaluation of competing systems. For a given installation, the engineer should prepare alternate power distribution schemes that can be reviewed with the company's financial planning group to develop true cost.

This chapter is restricted to the development of the relative capital cost of power distribution systems. While this chapter briefly points out some technical considerations, other chapters, particularly Chapters 2 and 15, should be referred to for a thorough analysis of the technical aspects of power distribution systems.

16.2 Information required

Before the engineer can begin to estimate the cost of alternate power-distribution systems, certain information must be obtained:

a) A load survey must be prepared. The kVA or kW load, in-rush current of that load, nature of the operation, degree of reliability required, and requirement for future expansion must be known.

b) Availability of utility power must be known. What is the available distribution voltage, the capacity, and the projected reliability of that source to meet the plant's need? Is a second utility source available to provide added reliability?

[1]The numbers in brackets preceded by the letter B correspond to those in the bibliography in 16.10.

--`,,`,,`-`-`,,`,,`,`,,`---

Copyright The Institute of Electrical and Electronics Engineers, Inc.
Provided by IHS under license with IEEE
No reproduction or networking permitted without license from IHS
Not for Resale

16.3 Factors to be considered

After the above information is known, several factors, which vary in importance depending on the size and type of plant, must be considered.

16.4 Preparing the cost estimate

The capital cost of a power system is the sum of the equipment and material costs, cost of installation, plus miscellaneous other costs incurred in order to provide a complete and ready-to-operate system. In making economic comparisons, it is important to include the entire system, as each part is economically related to the whole.

The cost estimate will be used by many people. Therefore, the estimator should clearly identify the items included in the estimate and the source or basis for estimating figures. Also, closely related items that affect the ultimate cost but are not included in the estimate should be identified so they are not overlooked.

When developing relative costs, the estimator may have limited time and information; therefore, it may be necessary to make assumptions. Those assumptions should be clearly documented and included as part of the estimate. Typical items to cover are design engineering, premium time allowance, field engineering, taxes, permits, shipping, foundations, contingencies, unusual scheduling, construction conditions, spare parts, and start-up assistance.

Many estimating programs are available on the market. In addition, some companies may have developed their own programs. These estimating programs usually contain a database of current costs for a large number of items and are useful in estimating costs for installation of equipment and for standard items such as conduit and wire, supporting materials, and grounding. However, major items, such as substation transformers, usually are custom-engineered. A quotation may be more useful for these items.

16.5 Classes of estimates

The three basic types of estimates are the preliminary estimate, the engineering estimate, and the detailed (final) estimate. The three types vary in accuracy as well as in time and effort required for preparation, with each successive estimate containing more detail and requiring more time. It is important to include sufficient money in the engineering budget to cover costs for the estimating activity.

16.5.1 Preliminary estimate

The foundation of a sound preliminary estimate is good judgment. One approach is to use the known cost of a similar installation and scale that cost to the size of the system under study, allowing for conditions particular to the new system, such as location, new technology, new design concepts, unusual labor productivity, and changes in costs of equipment and labor. Typically, the project cost will range from 15% below to 40% above the preliminary estimate.

Copyright The Institute of Electrical and Electronics Engineers, Inc.
Provided by IHS under license with IEEE
No reproduction or networking permitted without license from IHS Not for Resale

16.5.2 Engineering estimate

A typical engineering estimate requires a one-line diagram, a good understanding of what the final installation will include, layouts, and a comprehensive list of equipment. Prices of major items should be obtained from vendors or from previous purchases, and judicious use should be made of updated data from past jobs, other materials, and installation costs. An example is included at the end of this chapter. Typically, the actual cost will range from 10% below to 20% above the estimate.

16.5.3 Detailed estimate

In most cases, detailed estimates are done by experienced estimators using established procedures. Often, firm quotations are obtained from vendors. These estimates include quotations for detailed material requirements that consider bidding and construction specifications taken from completed drawings. Detailed estimates should be ±5–10% of final cost.

16.6 Equipment and material costs

Today's changing market precludes publishing a list of typical costs for equipment and material within this publication. Up-to-date costs may be obtained from recent purchases or quotations for the specific project under study, manufacturers' and distributors' published prices (include all increases and discounts in the base price), and from published estimating guides. The accuracy of the estimate will depend upon major items being priced accurately. Minor items may be covered by an allowance based on judgment or established percentages.

16.7 Installation costs

Since installation costs are significantly impacted by labor productivity and wage rates, the estimator should refer to previous experiences, to local contractors, and to current estimating guides.

The estimator should consider the fact that no task goes as easily as anticipated and, therefore, some contingencies should be added to time estimates. The estimate should include the cost of one or more trips to the warehouse to pick up materials, time to get the tools, coffee breaks, and other overhead considerations, in addition to the actual work. Also included should be an allowance for premium time or overtime and consideration of crew size and the non-working supervisor. Costs that vary with location, season, and time should be adjusted to reflect anticipated actual costs. For example, work in Alaska tends to be more expensive than work in the contiguous 48 states. Cost of work performed during extremes of cold or hot weather usually varies from that performed during more moderate weather. Cost escalators might be appropriate for work to be done at a future date. Most accounting and estimating departments have established procedures for coping with the time element.

Copyright The Institute of Electrical and Electronics Engineers, Inc.
Provided by IHS under license with IEEE
No reproduction or networking permitted without license from IHS Not for Resale

16.8 Other costs

Other costs to be considered include a contingency item to cover miscellaneous costs beyond those defined in the estimate. Contingencies adjust for estimating errors, unforeseen complications, and miscellaneous small tasks, but not for omission of significant items nor for changes in scope. Contingency values are a judgment decision, typically ranging from 5–15% of the estimate, and may differ for equipment, material, and labor.

An adjustment reflecting inflation modifies costs at the time the estimate is made to anticipate costs at the time expenditures are made. Usually the estimating or accounting department has established procedures for addressing this problem, but the estimating engineer should pass along any known factors, such as manufacturers' and distributors' escalation clauses.

If salvage values for equipment, cable, etc., are known, they should be recognized, even though they are seldom credited to a project.

Engineering costs for a project should include engineering studies, preliminary plans, estimates, preparation of construction drawings and specifications, equipment specifications, review of equipment and construction bids, etc., but should not include costs for construction supervision or field engineering. Engineering costs should be assigned whether the work is done by the owner or by consultants. Typically, engineering costs will run 8–12% of the construction costs of large, conventional projects. For engineering-intensive projects such as retrofit, low capital cost jobs, and high-technology projects, the percentages will be much higher.

Complete estimates should identify special services such as calibrating protective devices, providing assistance during check-out and start-up, testing, providing training, construction power, office space, storage, rental equipment, services of factory representatives, etc.

16.9 Example

The following example shows one technique for developing an *engineering cost estimate*. The reader should not use the dollar figures because undoubtedly they will be out-of-date and probably not directly applicable to the specific project.

Note that costs are segregated to show major items purchased by the owner, equipment and material provided by the contractor, and labor provided by the contractor.

The labor portion of the estimate is developed on a man-hour basis and then multiplied by the labor rate to obtain dollar amounts. This technique facilitates revising the estimate as labor rates change. Also, the man-hour information provides a ready means to check the estimate by comparing time actually spent on the job with time as estimated. For reference on subsequent jobs, the man-hour estimate without the effect of labor rates will prove more useful than dollar amounts.

Copyright The Institute of Electrical and Electronics Engineers, Inc.
Provided by IHS under license with IEEE
No reproduction or networking permitted without license from IHS Not for Resale

16.9.1 Design data

Typical power distribution system projects have been depicted in figures 16-1, 16-2, and 16-3, and enhanced with a site plan in figure 16-4. Figure 16-5 is provided as a typical estimate sheet. Figures 16-6 through 16-9 show the actual estimate for the system described.

16.9.2 Supporting data

A file of quotations and other information that substantiates the cost data should be maintained (not included in the example in this subclause, however). An allowance in the contractor's material for the overhead expenses and profit should be included.

A decision must be made either to use direct labor costs for each line item with overhead, profit, etc., added in the summary or to include total costs and profit in the cost per man-hour. In this example, all costs are included in the cost per man-hour.

Cost/man-hour for estimate: For the example, assume one superintendent with three crews, each with four working journeymen and one working foreman. The total crew is sixteen, with fifteen electricians working with the tools. Assume the average work week is forty hours at straight time and four hours at premium time.

Payroll cost/week:

Journeymen:	(12)	·	(40)	@ ($	/hr.)	=	$
	(12)	·	(4)	@ ($	/hr.)	=	
Foremen:	(3)	·	(40)	@ ($	/hr.)	=	
	(3)	·	(4)	@ ($	/hr.)	=	
Superintendent:			(40)	@ ($	/hr.)	=	
			(4)	@ ($	/hr.)	=	_____
Subtotal #1, payroll cost/wk						=	$

Add to the payroll cost:

Direct labor charges____%	=	
Indirect labor charges____%	=	_____
Subtotal #2, payroll, direct and indirect	=	$

Add to Subtotal #2:

Contractor's profit ____%	=	_____
Subtotal #3, costs and profit	=	$

Divide subtotal #3 by 15 to obtain the average cost per man-hour for this estimate. For purposes of this example, the average cost is assumed to be $35.00/man-hour.

16.10 Bibliography

[B1] IEEE Std 493-1990, IEEE Recommended Practice for the Design of Reliable Industrial and Commercial Power Systems (IEEE Gold Book) (ANSI).

Copyright The Institute of Electrical and Electronics Engineers, Inc.
Provided by IHS under license with IEEE
No reproduction or networking permitted without license from IHS
Not for Resale

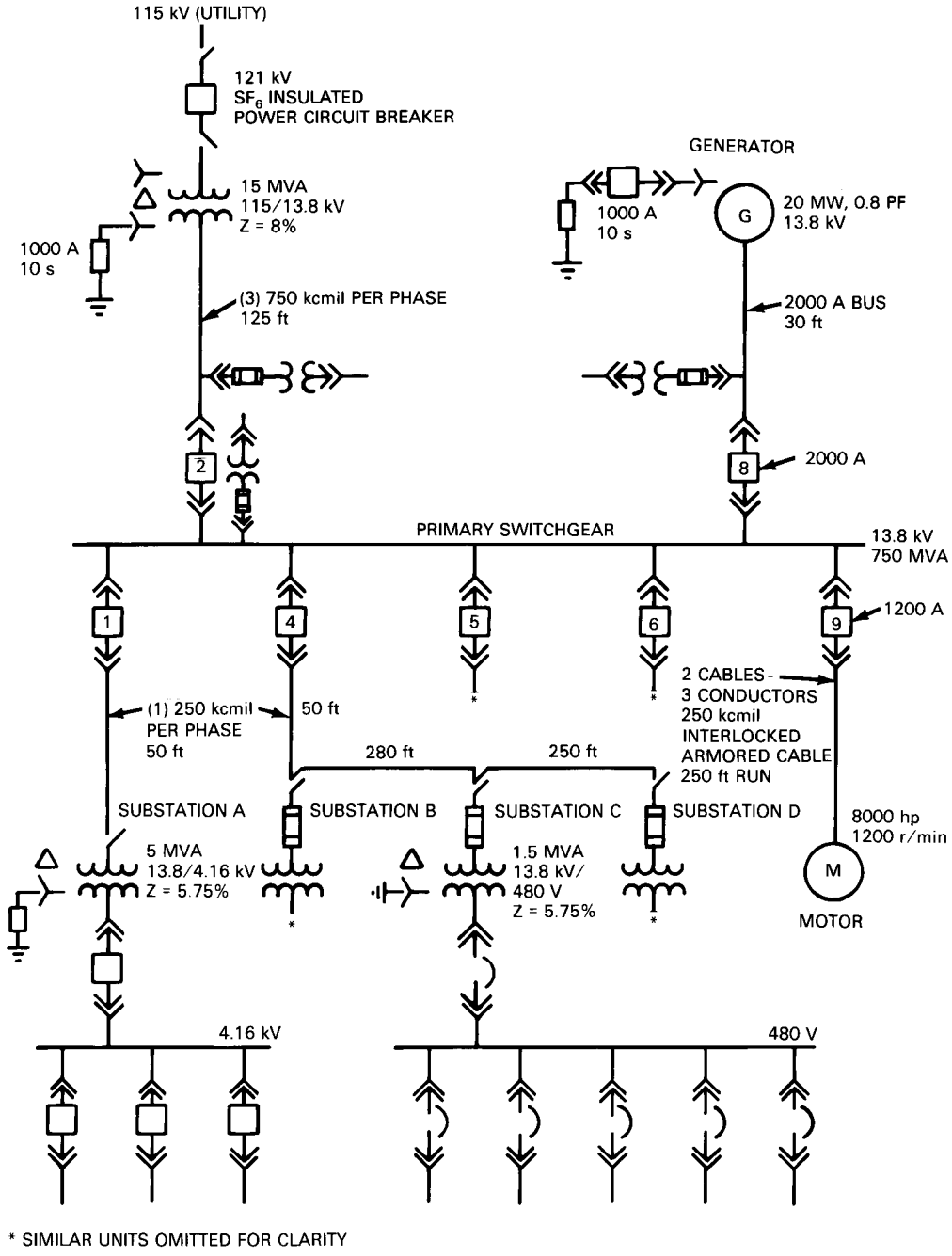

Figure 16-1—One-line diagram

Copyright The Institute of Electrical and Electronics Engineers, Inc.
Provided by IHS under license with IEEE
No reproduction or networking permitted without license from IHS Not for Resale

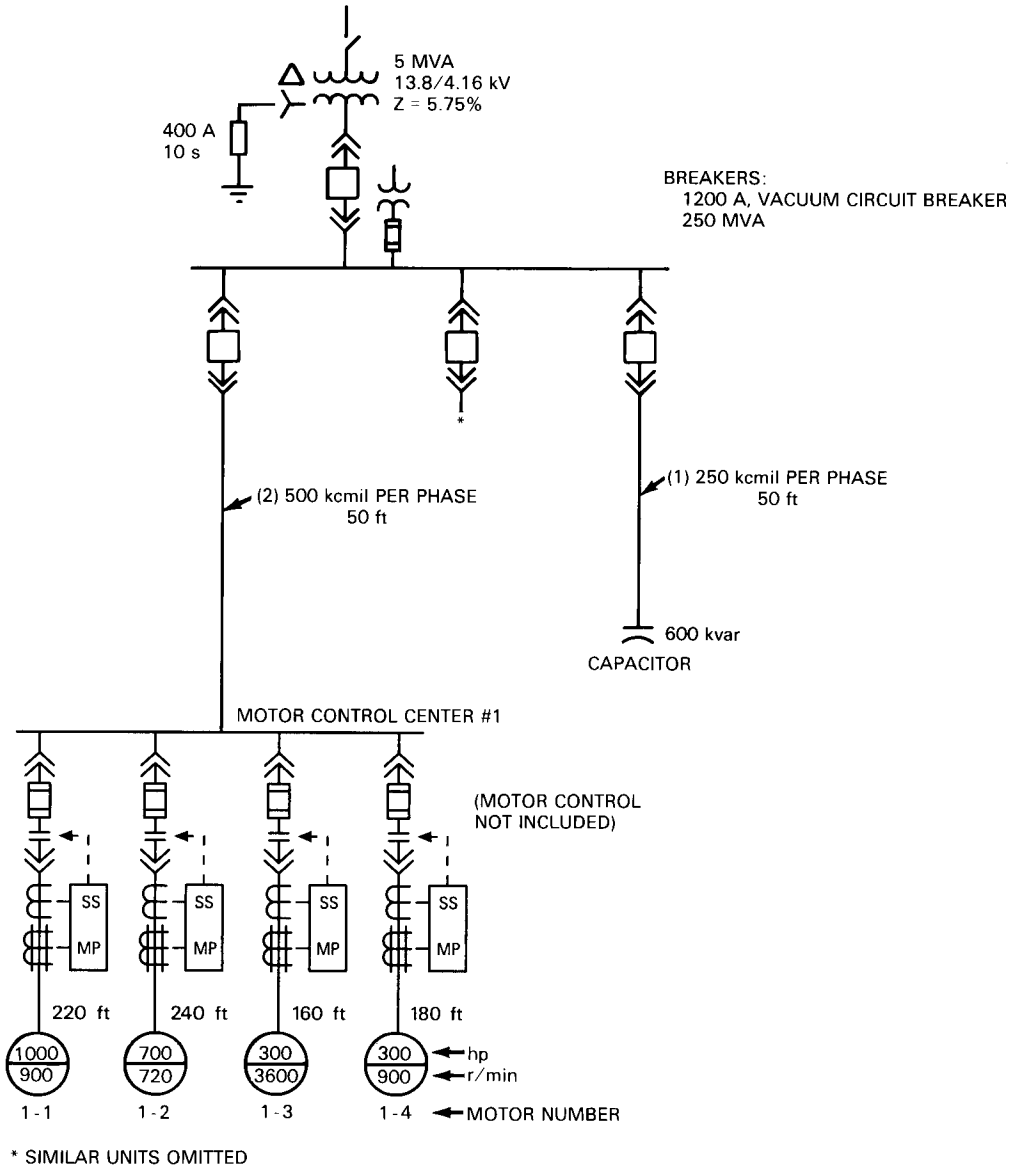

Figure 16-2—Substation A: 5 MVA, 4.16 kV

Copyright The Institute of Electrical and Electronics Engineers, Inc.
Provided by IHS under license with IEEE
No reproduction or networking permitted without license from IHS
Not for Resale

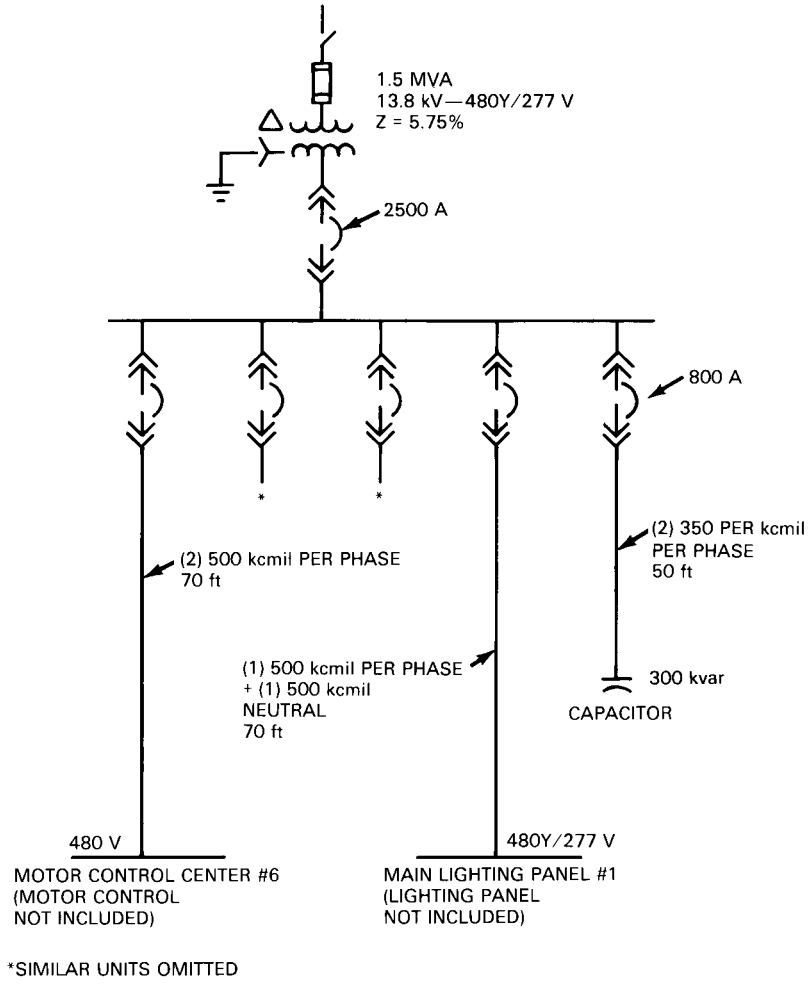

Figure 16-3—Substation C: 1.5 MVA, 480Y/277 V

Copyright The Institute of Electrical and Electronics Engineers, Inc.
Provided by IHS under license with IEEE
No reproduction or networking permitted without license from IHS
Not for Resale

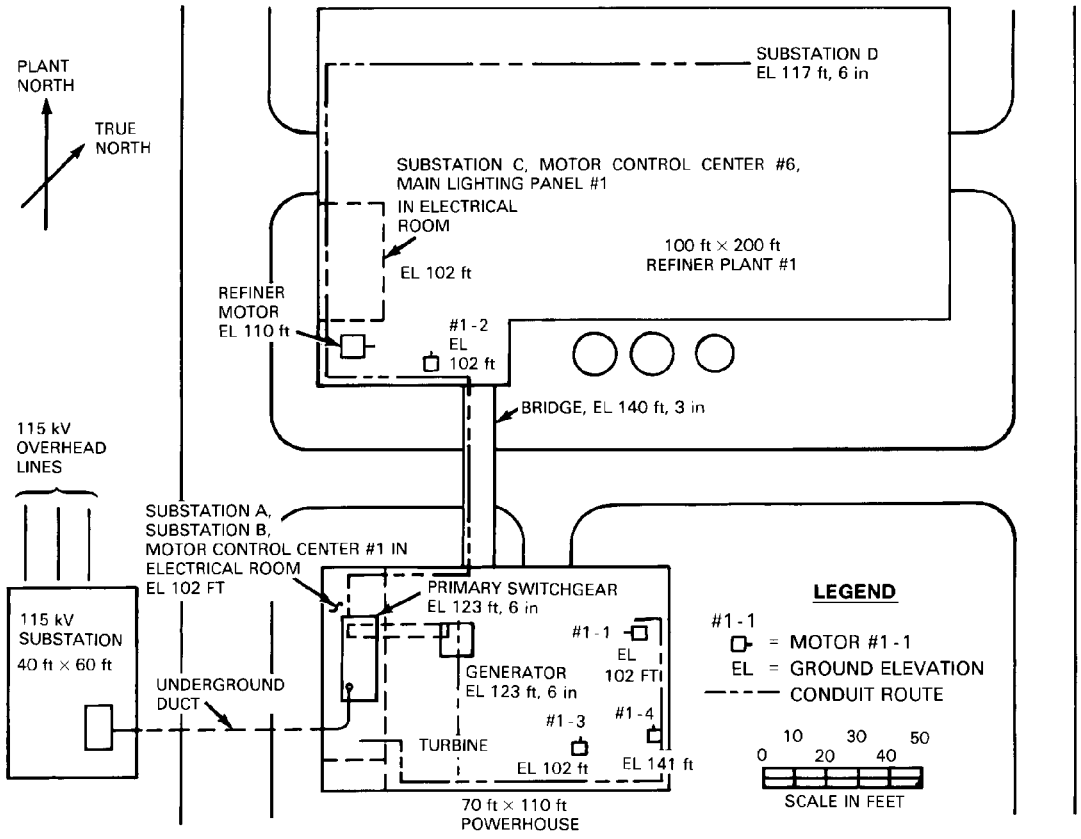

Figure 16-4—Site plan

Copyright The Institute of Electrical and Electronics Engineers, Inc.
Provided by IHS under license with IEEE
No reproduction or networking permitted without license from IHS
Not for Resale

☐ Summary Sheet JOB NAME: _____ File No. _____

☐ Detail Sheet _____ Sheet _____ of _____

LOCATION: _____ Estimate by _____

_____ Date _____

ITEM NO	DESCRIPTION	QUANTITY	MATERIAL			LABOR			TOTAL $
			UNIT $	$ BY OWNER	$ BY CONTRACTOR	HRS/ UNIT	HOURS	$ @ $35/HR	

Figure 16-5—Cost estimate calculation sheet

Copyright The Institute of Electrical and Electronics Engineers, Inc.
Provided by IHS under license with IEEE
No reproduction or networking permitted without license from IHS

Not for Resale

Copyright The Institute of Electrical and Electronics Engineers, Inc.
Provided by IHS under license with IEEE
No reproduction or networking permitted without license from IHS

PROPOSED INDUSTRIAL PLANT
POWER SYSTEM
LOCATION: CENTERVILLE USA

SHEET 1 OF 5

ESTIMATE

SUMMARY SHEET

ITEM NO.	DESCRIPTION	QUANTITY	MATERIAL $/ UNIT	MATERIAL $ BY OWNER	MATERIAL $ BY CONTRACTOR	LABOR HRS/ UNIT	LABOR HOURS	LABOR $ @ $35/HR	TOTAL $
	SUMMARY								
	PRIMARY POWER 13.8 kV								
	OUTDOOR SUBSTATION			479200	6975			40775	526950
	INCOMING FEEDER			25200	8290			22610	56100
	PRIMARY SWITCHGEAR			320000	7650			18200	345850
	GENERATOR -- INCLUDED IN MECHANICAL			------	------			------	------
	GENERATOR BUS			14500	1150			10500	26150
	FEEDERS			21120	10410			30415	61950
	GROUNDING				6300			7700	14000
	SUBTOTAL PRIMARY POWER			860020	40775			130200	1030995
	SUBSTATION A, 4.16 kV								
	UNIT SUBSTATION			179500	4950			10850	195300
	FEEDERS				5680			6190	11870
	CAPACITOR				6000			875	6875
	SUBTOTAL SUBSTATION A			179500	16630			17915	214045
	SUBSTATION C, 480 V								
	UNIT SUBSTATION			94000	2250			6895	103145
	FEEDERS				7940			9050	16990
	CAPACITOR				4500			700	5200
	SUBTOTAL SUBSTATION C			94000	14690			16645	125335
	SUBTOTAL SUBSTATION B			94000	14690			16645	125335
	SUBTOTAL SUBSTATION D			94000	14690			16645	125335
	TOTAL FOR POWER SYSTEM			1142020	84845			180135	1407000
	USE			1142000	84800			180100	1407000

(NOT INCLUDED IN ESTIMATE: FREIGHT, SPARES, TRAINING, CONTINGENCY, ESCALATION, SALES TAX, PERMITS AND FEES, BOND, FOUNDATIONS, LIGHTING)

Figure 16-6—Sample cost estimate calculation sheet: Summary

Not for Resale

Copyright The Institute of Electrical and Electronics Engineers, Inc.
Provided by IHS under license with IEEE
No reproduction or networking permitted without license from IHS

PROPOSED INDUSTRIAL PLANT
POWER SYSTEM
LOCATION: CENTERVILLE USA

SHEET 2 OF 5

DETAIL SHEET

ITEM NO.	DESCRIPTION	QUANTITY	$/ UNIT	MATERIAL $ BY OWNER	MATERIAL $ BY CONTRACTOR	LABOR HRS/ UNIT	LABOR HOURS	LABOR $ @ $35/HR	TOTAL $
	PRIMARY POWER (FIGURE 16-1)								
	OUTDOOR SUBSTATION:								
1	INCOMING LINE STRUCTURE	1		135000			500	17500	152500
2	SF_6 CIRCUIT BREAKER 121 kV	1		50000			100	3500	53500
3	TRANSFORMER, 15 MVA, 115—13.8 kV (SEE QUOTE)	1		289000					289000
	FOUNDATION INCLUDED IN STRUCTURAL ESTIMATE								
	HANDLING, RIGGING, INSTALLATION	LUMP SUM			1400		400	14000	15400
	PRIMARY CONNECTIONS	LUMP SUM			2600		100	3500	6100
	TESTING (SUBCONTRACT QUOTE + 15%)				1325				1325
4	GROUNDING RESISTOR, 100 A, WITH CT	1		5200					5200
	SUPPORTING STRUCTURE				1400		15	525	1925
	INSTALL, CONNECT, TEST				250		50	1750	2000
	SUBTOTAL OUTDOOR SUBSTATION			479200	6975			40775	526950
5	15 kV INCOMING FEEDER								
	TRENCH AND BACKFILL 18 in × 42 in; 10 yd^3 FILL	65 ft	55 yd^3		550	0.15	10	350	900
	CONCRETE-ENCASED DUCT; (3)=4 in; (1)=2 in	65 ft	65		4230	2	130	4550	8780
	CONDUIT RISERS 4 in ALUMINUM, INCLUDING FITTINGS, HANGERS	210 ft	12		2520	0.6	126	4410	6930
	CABLE, 1/C 750 kcmil, 15 kV EPR	1575 ft	16	25200		0.15	236	8260	33460
	TERMINATIONS	18	55		990	8	144	5040	6030
	SUBTOTAL INCOMING FEEDER			25200	8290			22610	56100
6	PRIMARY SWITCHGEAR:								
a	INDOOR METALCLAD, 15 kV, 750 MVA, (1) INCLUDING BREAKERS AND AUX, (4) FEEDER BREAKERS, (1) MOTOR STARTER BREAKER (SEE SWITCHGEAR QUOTE)	LOT		205000					205000
b	ADD FOR GENERATOR, BREAKER AND AUXILIARY, NEUTRAL BREAKER, RELAYING, SYNC, BATTERY (SEE GENERATOR QUOTE)	LOT		115000					115000
c	HANDLING, RIGGING				1150		100	3500	4650
d	ALIGN, CONNECT, CHECKOUT				750		420	14700	15450
e	TESTING (SUBCONTRACT QUOTE + 15%)				5750				5750
	SUBTOTAL PRIMARY SWITCHGEAR			320000	7650			18200	345850

Figure 16-7—Sample cost estimate calculation sheet: Primary power

Not for Resale

Copyright The Institute of Electrical and Electronics Engineers, Inc.
Provided by IHS under license with IEEE
No reproduction or networking permitted without license from IHS
Not for Resale

)OSED INDUSTRIAL PLANT
:R SYSTEM
\TION: CENTERVILLE USA SHEET 3 OF 5

DETAIL SHEET

ITEM NO.	DESCRIPTION	QUANTITY	$/ UNIT	MATERIAL $ BY OWNER	MATERIAL $ BY CONTRACTOR	LABOR HRS/ UNIT	LABOR HOURS	$ @ $35/HR	TOTAL $
	PRIMARY POWER (CONT'D)								
7	GENERATOR GENERATOR AND AUXILIARIES, EXCEPT FOR ITEM 6b INCLUDED IN TURBINE-GENERATOR ESTIMATE; SEE MECHANICAL ESTIMATE, INCLUDING ERECTION			------	------			------	------
8	GENERATOR BUS; 2000 A, 15 kV	LOT		14500	1150		300	10500	26150
	15 kV FEEDERS:								
9	SUBSTATION FEEDERS FROM BREAKERS #1, 4 (#5, 6 NOT INCLUDED) 3 in ALUMINUM CONDUIT, FITTINGS, HANGERS	630 ft	9		5670	0.5	315	11025	16700
	CABLE CC 250 kcmil, 15 kV, EPR (670 ft RUN)	2010 ft	5	10050		0.08	160.8	5628	15680
	TERMINATIONS	24			960	6	144	5040	6000
10	MOTOR FEEDER, 3/C 250 kcmil, 15 kV, INTERLOCKED ARMOR	540 ft	20.5	11070		0.28	151.2	5292	16360
	SUPPORTS, BRACKETS, (5 ft CENTERS)	50	42		2100	1	50	1750	3850
	TERMINATIONS	4	120		480	12	48	1680	2160
11	HI-POT TEST, INCLUDING INCOMING & GENERATOR BUS				1200				1200
	SUBTOTAL FEEDERS			21120	10410			30415	61950
12	GROUNDING (INCLUDES GROUND LOOP FOR 2 BUILDINGS, CONNECTIONS TO ALL 15 kV AND 5 kV CLASS EQUIPMENT):								
	4/0 AWG BARE COPPER	2000 ft	2.15		4300	0.06	120	4200	8500
	CONNECTORS, RODS	LOT			2000		100	3500	5500
	SUBTOTAL GROUNDING				6300			7700	14000

Figure 16-7—Sample cost estimate calculation sheet: Primary power (continued)

Copyright The Institute of Electrical and Electronics Engineers, Inc.
Provided by IHS under license with IEEE
No reproduction or networking permitted without license from IHS

PROPOSED INDUSTRIAL PLANT
POWER SYSTEM
LOCATION: CENTERVILLE USA

SHEET 4 OF 5

DETAIL SHEET

ITEM NO.	DESCRIPTION	QUANTITY	$/ UNIT	MATERIAL $ BY OWNER	MATERIAL $ BY CONTRACTOR	LABOR HRS/ UNIT	LABOR HOURS	LABOR $ @ $35/HR	TOTAL $
	SUBSTATION A (FIGURE 16-2)								
	INDOOR SUBSTATION								
13 a	UNIT SUBSTATION -- PRIMARY SWITCH	1		170000				170000	
	TRANSFORMER 5 MVA, 13.8—4.16 kV; SWITCHGEAR SECTION WITH (4) 2000 A VACUUM CIRCUIT BREAKERS, METERING, RELAYING, TOTAL COST (SEE QUOTES)								
b	HANDLING, RIGGING				550		80	2800	3350
c	ALIGN, CONNECT, CHECKOUT				550		180	6300	6850
d	TESTING (SUBCONTRACT + 15%)				1550				1550
e	FOUNDATION AND ROOM IN STRUCTURAL ESTIMATE, LIGHTING IN BUILDING ESTIMATE			----	----			----	----
14	GROUNDING RESISTOR 400 A, WITH CT	1		9500					9500
	SUPPORTING STRUCTURE				2000		15	525	2525
	INSTALL, CONNECT, TEST				300		35	1225	1525
	SUBTOTAL INDOOR SUBSTATION			179500	4950			10850	195300
	5 kV FEEDERS (FEEDER #2 NOT INCLUDED)								
15	3 in ALUMINUM CONDUIT, FITTINGS, HANGERS	100 ft	9.1		910	0.5	50	1750	2660
	CABLE, 1/C, 500 kcmil, 5 kV, EPR	330 ft	6.8		2240	0.11	36	1260	3500
	2-1/2 in ALUMINUM CONDUIT, FITTINGS, HANGERS	50 ft	8.3		420	0.45	22.5	790	1210
	CABLE, 1/C, 250 kcmil, 5 kV, EPR	180 ft	4.8		860	0.08	14.4	500	1360
	TERMINATIONS	18	36		650	3	54	1890	2540
16	TESTING (SUBCONTRACT)				600				600
	SUBTOTAL FEEDERS				5680			6190	11870
17	CAPACITOR, 4.16 kV, 600 kvar, INCLUDING INSTALLATION				6000		25	875	6875

Figure 16-8—Sample cost estimate calculation sheet: Substation A

Not for Resale

Copyright The Institute of Electrical and Electronics Engineers, Inc.
Provided by IHS under license with IEEE
No reproduction or networking permitted without license from IHS
Not for Resale

PROPOSED INDUSTRIAL PLANT
POWER SYSTEM
LOCATION: CENTERVILLE USA

SHEET 5 OF 5

DETAIL SHEET

ITEM NO.	DESCRIPTION	QUANTITY	$/ UNIT	MATERIAL $ BY OWNER	MATERIAL $ BY CONTRACTOR	LABOR HRS/ UNIT	LABOR HOURS	LABOR $ @ $35/HR	TOTAL $
	SUBSTATION C (FIGURE 16-3)								
	INDOOR SUBSTATION								
18 a	UNIT SUBSTATION -- FUSED PRIMARY SWITCH; TRANSFORMER 1.5 MVA, 13.8 kV—480 V; SWITCHGEAR SECTION WITH 2500 A MAIN, (4) 1200 A FEEDER BREAKERS, METERING (USE ACTUAL COST FROM PROJECT 80-107 + 12.5%)	1		94000					94000
b	HANDLING, RIGGING				550		77	2695	3245
c	ALIGN, CONNECT, CHECKOUT				550		120	4200	4750
d	TESTING				1150				1150
e	FOUNDATION AND ROOM IN STRUCTURAL ESTIMATE; LIGHTING IN BUILDING ESTIMATE			----	----			----	----
	SUBTOTAL SUBSTATION			94000	2250			6895	103145
19	480 V FEEDERS								
	2-1/2 in ALUM CONDUIT, FITTINGS, HANGERS	100 ft	8.3		830	0.45	45	1580	2410
	3 in ALUM CONDUIT, FITTINGS, HANGERS	140 ft	9.1		1270	0.5	70	2450	3720
	4 in ALUM CONDUIT, FITTINGS, HANGERS	70 ft	11		770	0.62	43.4	1520	2290
	1/C 250 kcmil, XHHW	80 ft	2.3		180	0.08	6.4	220	400
	1/C 350 kcmil, XHHW	360 ft	3.4		1220	0.08	28.8	1010	2230
	1/C 500 kcmil, XHHW	720 ft	5.1		3670	0.09	64.8	2270	5940
	SUBTOTAL FEEDERS				7940			9050	16990
20	CAPACITOR, 480 V, 300 kvar, INCLUDING INSTALLATION	1			4500		20	700	5200

Figure 16-9—Sample cost estimate calculation sheet: Substation C

This page intentionally left blank

--`,,`,,`,`,,`---

Copyright The Institute of Electrical and Electronics Engineers, Inc.
Provided by IHS under license with IEEE
No reproduction or networking permitted without license from IHS

Not for Resale

Annex 16A
Selected sources for cost-estimating information

(informative)

This is an abbreviated list of references for cost-estimating information. Omission of other current sources is not meant in any way to be judgmental. The reader is urged to consider all available references.

NECA Manual of Labor Units, National Electrical Contractors Association, Inc.
7315 Wisconsin Avenue, Bethesda, MD 20814

NECA information is proprietary. Nonmembers of NECA may contact the national office (address above) or the local NECA office for further information.

Mechanical and Electrical Cost Data, R. S. Means Company, Inc.
100 Construction Plaza, Kingston, MA 02364

Means offers several different services. Contact Means for further information.

Richardson Rapid Estimating Systems, Richardson Engineering Services, Inc.
909 Rancheros Drive, P.O. Box 1055, San Marcos, CA 92069

Richardson offers a wide range of estimating information, including electrical.

Kolstad & Kohnert, Rapid Electrical Estimating and Pricing
McGraw-Hill Book Company, P.O. Box 400, Hightstown, NJ 08520

National Price Service
4525 West 160th Street, Cleveland, OH 44135

Trade Service Publications, Inc.
10996 Torreyana Road, San Diego, CA 92121

U.S. Department of Labor, Bureau of Labor Statistics
450 Golden Gate Avenue, Box 36017, San Francisco, CA 94102

Copyright The Institute of Electrical and Electronics Engineers, Inc.
Provided by IHS under license with IEEE
No reproduction or networking permitted without license from IHS
Not for Resale

This page intentionally left blank

Copyright The Institute of Electrical and Electronics Engineers, Inc.
Provided by IHS under license with IEEE
No reproduction or networking permitted without license from IHS
Not for Resale

Annex A
Power system device function numbers[1]

(informative)

1. master element. The initiating device, such as a control switch, etc., that serves, either directly or through such permissive devices as protective and time-delay relays, to place equipment in or out of operation.

NOTE—This number is normally used for a hand-operated device, although it may also be used for an electrical or mechanical device for which no other function number is suitable.

2. time-delay starting or closing relay. A device that functions to give a desired amount of time delay before or after any point of operation in a switching sequence or protective relay system, except as specifically provided by device functions 48, 62, and 79.

3. checking or interlocking relay. A relay that operates in response to the position of a number of other devices (or to a number of predetermined conditions) in equipment, to allow an operating sequence to proceed, stop, or provide a check of the position of these devices or of these conditions for any purpose.

4. master contactor. A device, generally controlled by device function 1 or the equivalent and the required permissive and protective devices, that serves to make and break the necessary control circuits to place equipment into operation under the desired conditions and to take it out of operation under other abnormal conditions.

5. stopping device. A control device used primarily to shut down an equipment and hold it out of operation. (This device may be manually or electrically actuated, but it excludes the function of electrical lockout [see device function 86] on abnormal conditions.)

6. starting circuit breaker. A device whose principal function is to connect a machine to its source of starting voltage.

7. rate-of-rise relay. A relay that functions on an excessive rate-of-rise of current.

8. control power disconnecting device. A disconnecting device, such as a knife switch, circuit breaker, or pull-out fuse block, used for the purpose of respectively connecting and disconnecting the source of control power to and from the control bus or equipment.

NOTE—Control power is considered to include auxiliary power that supplies such apparatus as small motors and heaters.

9. reversing device. A device that is used for the purpose of reversing a machine field or for performing any other reversing functions.

[1]From IEEE Std C37.2-1991, IEEE Standard Electrical Power System Device Function Numbers (ANSI).

Copyright The Institute of Electrical and Electronics Engineers, Inc.
Provided by IHS under license with IEEE
No reproduction or networking permitted without license from IHS
Not for Resale

10. unit sequence switch. A switch that is used to change the sequence in which units may be placed in and out of service in multiple-unit equipments.

11. multifunction device. A device that performs three or more comparatively important functions that could only be designated by combining several of these device function numbers. All of the functions performed by device 11 shall be defined in the drawing legend or device function definition list.

NOTE—If only two relatively important functions are performed by the device, it is preferred that both function numbers be used, as described in 3.6 of IEEE Std C37.2-1991.

12. overspeed device. Usually, a direct-connected speed switch that functions on machine overspeed.

13. synchronous-speed device. A device such as a centrifugal-speed switch, a slip-frequency relay, a voltage relay, an undercurrent relay, or any type of device that operates at approximately the synchronous speed of a machine.

14. underspeed device. A device that functions when the speed of a machine falls below a predetermined value.

15. speed- or frequency-matching device. A device that functions to match and hold the speed or the frequency of a machine or of a system equal to, or approximately equal to, that of another machine, source, or system.

16. Reserved for future application.

17. shunting or discharge switch. A switch that serves to open or to close a shunting circuit around any piece of apparatus (except a resistor), such as a machine field, a machine armature, a capacitor, or a reactor.

NOTE—This excludes devices that perform such shunting operations as may be necessary in the process of starting a machine by devices 6 or 42 (or their equivalent) and also excludes device function 73 that serves for the switching of resistors.

18. accelerating or decelerating device. A device that is used to close or to cause the closing of circuits that are used to increase or decrease the speed of a machine.

19. starting-to-running transition contactor. A device that operates to initiate or cause the automatic transfer of a machine from the starting to the running power connection.

20. electrically operated valve. An electrically operated, controlled, or monitored valve used in a fluid, air, gas, or vacuum line.

NOTE—The function of the valve may be more completely indicated by the use of the suffixes as discussed in 3.2 of IEEE Std C37.2-1991.

--`,,`,,`-`-`,,`,,`,`,,`---
Copyright The Institute of Electrical and Electronics Engineers, Inc.
Provided by IHS under license with IEEE
No reproduction or networking permitted without license from IHS Not for Resale

21. distance relay. A relay that functions when the circuit admittance, impedance, or reactance increases or decreases beyond a predetermined value.

22. equalizer circuit breaker. A breaker that serves to control or to make and break the equalizer or the current-balancing connections for a machine field, or for regulating equipment, in a multiple-unit installation.

23. temperature control device. A device that functions to raise or lower the temperature of a machine or other apparatus, or of any medium, when its temperature falls below or rises above a predetermined value.

NOTE—An example is a thermostat that switches on a space heater in a switchgear assembly when the temperature falls to a desired value. This should be distinguished from a device that is used to provide automatic temperature regulation between close limits and would be designated as device function 90T.

24. volts per hertz relay. A relay that functions when the ratio of voltage to frequency exceeds a preset value. The relay may have an instantaneous or a time characteristic.

25. synchronizing or synchronism-check device. A device that operates when two ac circuits are within the desired limits of frequency, phase angle, and voltage, to permit or to cause the paralleling of these two circuits.

26. apparatus thermal device. A device that functions when the temperature of the protected apparatus (other than the load-carrying windings of machines and transformers as covered by device function number 49) or of a liquid or other medium exceeds a predetermined value, or when the temperature of the protected apparatus or of any medium decreases below a predetermined value.

27. undervoltage relay. A relay that operates when its input voltage is less than a predetermined value.

28. flame detector. A device that monitors the presence of the pilot or main flame in such apparatus as a gas turbine or a steam boiler.

29. isolating contactor. A device that is used expressly for disconnecting one circuit from another for the purposes of emergency operation, maintenance, or test.

30. annunciator relay. A nonautomatically reset device that gives a number of separate visual indications upon the functioning of protective devices and that may also be arranged to perform a lockout function.

31. separate excitation device. A device that connects a circuit, such as the shunt field of a synchronous converter, to a source of separate excitation during the starting sequence.

32. directional power relay. A relay that operates on a predetermined value of power flow in a given direction, or upon reverse power flow such as that resulting from the motoring of a generator upon loss of its prime mover.

Copyright The Institute of Electrical and Electronics Engineers, Inc.
Provided by IHS under license with IEEE
No reproduction or networking permitted without license from IHS
Not for Resale

33. position switch. A switch that makes or breaks contact when the main device or piece of apparatus that has no device function number reaches a given position.

34. master sequence device. A device, such as a motor-operated multicontact switch or the equivalent, or a programming device, such as a computer, that establishes or determines the operating sequence of the major devices in an equipment during starting and stopping or during other sequential switching operations.

35. brush-operating or slip-ring short-circuiting device. A device for raising, lowering, or shifting the brushes of a machine; short-circuiting its slip rings; or engaging or disengaging the contacts of a mechanical rectifier.

36. polarity or polarizing voltage device. A device that operates, or permits the operation of, another device on a predetermined polarity only or that verifies the presence of a polarizing voltage in equipment.

37. undercurrent or underpower relay. A relay that functions when the current or power flow decreases below a predetermined value.

38. bearing protective device. A device that functions on excessive bearing temperature or on other abnormal mechanical conditions associated with the bearing, such as undue wear, which may eventually result in excessive bearing temperature or failure.

39. mechanical condition monitor. A device that functions upon the occurrence of an abnormal mechanical condition (except that associated with bearings as covered under device function 38), such as excessive vibration, eccentricity, expansion, shock, tilting, or seal failure.

40. field relay. A relay that functions on a given or abnormally low value or failure of machine field current, or on an excessive value of the reactive component of armature current in an ac machine indicating abnormally low field excitation.

41. field circuit breaker. A device that functions to apply or remove the field excitation of a machine.

42. running circuit breaker. A device whose principal function is to connect a machine to its source of running or operating voltage. This function may also be used for a device, such as a contactor, that is used in series with a circuit breaker or other fault-protecting means, primarily for frequent opening and closing of the circuit.

43. manual transfer or selector device. A manually operated device that transfers the control circuits in order to modify the plan of operation of the switching equipment or of some of the devices.

44. unit sequence starting relay. A relay that functions to start the next available unit in a multiple-unit equipment upon the failure or nonavailability of the normally preceding unit.

Copyright The Institute of Electrical and Electronics Engineers, Inc.
Provided by IHS under license with IEEE
No reproduction or networking permitted without license from IHS Not for Resale

45. atmospheric condition monitor. A device that functions upon the occurrence of an abnormal atmospheric condition, such as damaging fumes, explosive mixtures, smoke, or fire.

46. reverse-phase or phase-balance current relay. A relay that functions when the polyphase currents are of reverse-phase sequence or when the polyphase currents are unbalanced or contain negative phase-sequence components above a given amount.

47. phase-sequence or phase-balance voltage relay. A relay that functions upon a predetermined value of polyphase voltage in the desired phase sequence, when the polyphase voltages are unbalanced, or when the negative phase-sequence voltage exceeds a given amount.

48. incomplete sequence relay. A relay that generally returns the equipment to the normal or off position and locks it out if the normal starting, operating, or stopping sequence is not properly completed within a predetermined time.

49. machine or transformer thermal relay. A relay that functions when the temperature of a machine armature or other load-carrying winding or element of a machine or power transformer exceeds a predetermined value.

50. instantaneous overcurrent relay. A relay that functions instantaneously on an excessive value of current.

51. ac time overcurrent relay. A relay that functions when the ac input current exceeds a predetermined value, and in which the input current and operating time are inversely related through a substantial portion of the performance range.

52. ac circuit breaker. A device that is used to close and interrupt an ac power circuit under normal conditions or to interrupt this circuit under fault or emergency conditions.

53. exciter or dc generator relay. A relay that forces the dc machine field excitation to build up during starting or that functions when the machine voltage has built up to a given value.

54. turning gear engaging device. An electrically operated, controlled, or monitored device that functions to cause the turning gear to engage (or disengage) the machine shaft.

55. power factor relay. A relay that operates when the power factor in an ac circuit rises above or falls below a predetermined value.

56. field application relay. A relay that automatically controls the application of the field excitation to an ac motor at some predetermined point in the slip cycle.

57. short-circuiting or grounding device. A primary circuit switching device that functions to short-circuit or to ground a circuit in response to automatic or manual means.

58. rectification failure relay. A device that functions if a power rectifier fails to conduct or block properly.

Copyright The Institute of Electrical and Electronics Engineers, Inc.
Provided by IHS under license with IEEE
No reproduction or networking permitted without license from IHS
Not for Resale

59. overvoltage relay. A relay that operates when its input voltage is more than a predetermined value.

60. voltage or current balance relay. A relay that operates on a given difference in voltage, or current input or output, of two circuits.

61. density switch or sensor. A device that operates on a given value, or a given rate of change, of gas density.

62. time-delay stopping or opening relay. A time-delay relay that serves in conjunction with the device that initiates the shutdown, stopping, or opening operation in an automatic sequence or protective relay system.

63. pressure switch. A switch that operates on given values, or on a given rate of change, of pressure.

64. ground detector relay. A relay that operates upon failure of machine or other apparatus insulation to ground.

NOTE—This function is not applied to a device connected in the secondary circuit of current transformers in a normally grounded power system, where other device numbers with the suffix G or N should be used; that is, 51N for an ac time overcurrent relay connected in the secondary neutral of the current transformers.

65. governor. The assembly of fluid, electrical, or mechanical control equipment used for regulating the flow of water, steam, or other media to the prime mover for such purposes as starting, holding speed or load, or stopping.

66. notching or jogging device. A device that functions to allow only a specified number of operations of a given device or equipment, or a specified number of successive operations within a given time of each other. Also a device that functions to energize a circuit periodically or for fractions of specified time intervals, or that is used to permit intermittent acceleration or jogging of a machine at low speeds for mechanical positioning.

67. ac directional overcurrent relay. A relay that functions on a desired value of ac overcurrent flowing in a predetermined direction.

68. blocking relay. A relay that initiates a pilot signal for blocking of tripping on external faults in a transmission line or in other apparatus under predetermined conditions, or that cooperates with other devices to block tripping or to block reclosing on an out-of-step condition or on power swings.

69. permissive control device. Generally a two-position device that in one position permits the closing of a circuit breaker, or the placing of an equipment into operation, and in the other position prevents the circuit breaker or the equipment from being operated.

70. rheostat. A variable resistance device used in an electric circuit when the device is electrically operated or has other electrical accessories, such as auxiliary, position, or limit switches.

--`,,`-`-`,,`,,`,`,,`---

Copyright The Institute of Electrical and Electronics Engineers, Inc.
Provided by IHS under license with IEEE
No reproduction or networking permitted without license from IHS Not for Resale

71. level switch. A switch that operates on given values, or on a given rate of change, of level.

72. dc circuit breaker. A circuit breaker that is used to close and interrupt a dc power circuit under normal conditions or to interrupt this circuit under fault or emergency conditions.

73. load-resistor contactor. A contactor that is used to shunt or insert a step of load limiting, shifting, or indicating resistance in a power circuit; to switch a space heater in circuit; or to switch a light or regenerative load resistor of a power rectifier or other machine in and out of circuit.

74. alarm relay. A relay other than an annunciator, as covered under device function 30, that is used to operate, or that operates in connection with, a visual or audible alarm.

75. position changing mechanism. A mechanism that is used for moving a main device from one position to another in an equipment; for example, shifting a removable circuit breaker unit to and from the connected, disconnected, and test positions.

76. dc overcurrent relay. A relay that functions when the current in a dc circuit exceeds a given value.

77. telemetering device. A transmitter used to generate and transmit to a remote location an electrical signal representing a measured quantity, or a receiver used to receive the electrical signal from a remote transmitter and convert the signal to represent the original measured quantity.

78. phase-angle measuring or out-of-step protective relay. A relay that functions at a predetermined phase angle between two voltages, between two currents, or between voltage and current.

79. ac reclosing relay. A relay that controls the automatic reclosing and locking out of an ac circuit interrupter.

80. flow switch. A switch that operates on given values, or on a given rate of change, of flow.

81. frequency relay. A relay that responds to the frequency of an electrical quantity, operating when the frequency or rate of change of frequency exceeds or is less than a predetermined value.

82. dc load-measuring reclosing relay. A relay that controls the automatic closing and reclosing of a dc circuit interrupter, generally in response to load-circuit conditions.

83. automatic selective control or transfer relay. A relay that operates to select automatically between certain sources or conditions in equipment or that performs a transfer operation automatically.

--`,,`,,`-`-`,,`,,`,`,,`---
Copyright The Institute of Electrical and Electronics Engineers, Inc.
Provided by IHS under license with IEEE
No reproduction or networking permitted without license from IHS
Not for Resale

84. operating mechanism. The complete electrical mechanism or servomechanism, including the operating motor, solenoids, position switches, etc., for a tap changer, induction regulator, or any similar piece of apparatus that otherwise has no device function number.

85. carrier or pilot-wire receiver relay. A relay that is operated or restrained by a signal used in connection with carrier-current or dc pilot-wire fault relaying.

86. lockout relay. A hand- or electrically reset auxiliary relay that is operated, upon the occurrence of abnormal conditions, to maintain associated equipment or devices inoperative until it is reset.

87. differential protective relay. A protective relay that functions on a percentage, phase angle, or other quantitative difference between two currents or some other electrical quantities.

88. auxiliary motor or motor generator. A device used for operating auxiliary equipment, such as pumps, blowers, exciters, rotating magnetic amplifiers, etc.

89. line switch. A switch used as a disconnecting, load-interrupter, or isolating switch in an ac or dc power circuit. (This device function number normally is not necessary unless the switch is electrically operated or has electrical accessories, such as an auxiliary switch, a magnetic lock, etc.)

90. regulating device. A device that functions to regulate a quantity, or quantities, such as voltage, current, power, speed, frequency, temperature, and load, at a certain value or between certain (generally close) limits for machines, tie lines, or other apparatus.

91. voltage directional relay. A relay that operates when the voltage across an open circuit breaker or contactor exceeds a given value in a given direction.

92. voltage and power directional relay. A relay that permits or causes the connection of two circuits when the voltage difference between them exceeds a given value in a predetermined direction and causes these two circuits to be disconnected from each other when the power flowing between them exceeds a given value in the opposite direction.

93. field-changing contactor. A contactor that functions to increase or decrease, in one step, the value of field excitation on a machine.

94. tripping or trip-free relay. A relay that functions to trip a circuit breaker, contactor, or equipment; to permit immediate tripping by other devices; or to prevent immediate reclosure of a circuit interrupter if it should open automatically, even though its closing circuit is maintained closed.

95–99. Used only for specific applications in individual installations if none of the functions assigned to the numbers from 1 to 94 is suitable.

Copyright The Institute of Electrical and Electronics Engineers, Inc.
Provided by IHS under license with IEEE
No reproduction or networking permitted without license from IHS Not for Resale

Index

A

Accelerating device, definition of, 722
Acceptance testing (commissioning), protective devices, 281-296
  checklists, 284-285, 287, 289
  equipment electrical tests, 283-291
    air circuit breakers, 286
    air switches, 286
    automatic transfer switches, 290
    battery and capacitor-stored control energy systems, 290
    cables, 283-284
    direct-trip circuit breakers, 291
    ground-fault protection systems, 288
    grounding systems, 288
    metal-enclosed busway, 286
    metering and instrumentation, 288
    molded-case circuit breakers, 286
    motor control centers, 288
    oil circuit breakers, 286
    outdoor bus structures, 190
    power circuit breakers, 286
    protective relays, 288
    relay-operated circuit breakers, 291-293
    rotating machinery, 288, 290
    surge arresters, 290
    switchgear and switchboard assemblies, 283
    transformers, dry-type, 283
    transformers, instrument, 288
    transformers, liquid-filled, 283
    turbine/engine generators, 290-291
  final check, 294-296
    current transformers, 294-295
    stage system test, 296
    voltage transformers, 295-296
  general survey and diagramming, 282-283
  permanent magnetization of current transformers, preventing, 294
  system function tests, 291
  visual check of equipment, 283
  see also Tests
AC circuit breaker, definition of, 725
AC to dc power converters, 403
AC directional overcurrent relay, definition of, 726
AC reclosing relay, definition of, 727
AC time overcurrent relay, definition of, 725
Active power, 394-401, 410-411
Adjustable speed drives, 33, 95, 103, 447, 529-532
  ac, 529
  dc, 529
  specification, 531-532
Aerial cable, 348-349, 580-581
AHAM (Association of Home Appliance Manufacturers), 14
AIA (American Institute of Architects), 18
AIEE, 444
Air circuit breakers, 286
Air compressors, 52
Air-conditioning equipment, 3, 90
Air-Conditioning and Refrigeration Institute (ARI), 14
Air switches, acceptance testing, 286
Alarm relay, definition of, 727
Alarm systems, 3
Altitude (site), special requirements, 4
Aluminum conductors
  characteristics, 554-556
  constants, 177
  impedance data, 182-183
  temperatures, 245
  voltage drop, 99-100
American Electricians Handbook, 10
American Institute of Architects (AIA), 18
American National Standards Institute (ANSI), 7-9
American Society of Heating, Refrigerating, and Air-Conditioning Engineers (ASHRAE), 11-12
Ammeters, 541, 543
Ampere-squared (A^2) meters, 549
Annunciator relay, definition of, 723
Annunciator systems, 54
ANSI (American National Standards Institute), 7-9

Copyright The Institute of Electrical and Electronics Engineers, Inc.
Provided by IHS under license with IEEE
No reproduction or networking permitted without license from IHS
Not for Resale

Apparatus thermal device, definition of, 723
Appliance Industry Committee, 5
Applied Protective Relaying, 11
Arc discharge lighting, 33
Arc furnaces, 33, 52, 93, 95, 403, 446
Arc welding, 33, 52, 57, 402, 446, 633-634
ARI (Air-Conditioning and Refrigeration Institute), 14
"As built" drawings, 21
ASHRAE (American Society of Heating, Refrigerating, and Air-Conditioning Engineers), 11-12
ASHRAE Handbook, 11
ASHRAE Journal, 12
Association of Home Appliance Manufacturers (AHAM), 14
Atmospheric condition monitor, definition of, 725
Automatic selective control or transfer relay, definition of, 727
Automatic transfer switching, 248, 290
Autotransformers, 103, 504-506, 523, 525
Auxiliary motor or motor generator, definition of, 728
Auxiliary relays, 209
AXCESS energy analysis computer program, 9

B

Ballasts, 22-23, 77, 84-85, 663-666
Basic impulse insulation levels (BILs), 323-325, 510, 514-516
Basic surge level (BSL), 340
Battery systems, 290
Bearing protective device, definition of, 724
BEPS (Building Energy Performance Standards), 642
BILs (basic impulse insulation levels), 323-325, 510, 514-516
Blocking relay, definition of, 726
Board of Fire Underwriters, 7
Bolted-pressure switches, 479-480
Brush-operating short-circuiting device, 724
BSL (basic surge level), 340
Building Construction Cost Data, 20
Building Energy Performance Standards (BEPS), 642
Buried cable, 16, 22, 572-573
Business machines, 4
Busways
  acceptance testing, 286, 290
  construction, 621-623
  feeder, 623-624
  field testing, 637
  installation, 635-637
  layout, 634-635
  lighting, 626-627
  origin, 621
  outdoor, 290
  over 600 V (metal-enclosed bus)
    acceptance testing, 286
    construction, 638
    field testing, 639
    ratings, 325, 638
    standards, 637-638
    switchgear, 494
  plug-in, 3, 17, 624-626
  selection and application, 628-634
    building expansion joints, 633
    current-carrying capacity, 628
    short-circuit current rating, 628-629
    thermal expansion, 632-633
    voltage drop, 101, 629-632
    welding loads, 633-634
  standards, 627-628
  trolley, 3, 17, 627

C

Cable
  acceptance testing, 283-284
  aerial, 348-349, 580-581
  armored, 17, 600
  buried, 16, 22, 349, 572-573
  connectors. *See* Connectors
  construction, 554-566
    comparison between copper and aluminum, 554-555
    conductors, 554
    design, 560-566

Copyright The Institute of Electrical and Electronics Engineers, Inc.
Provided by IHS under license with IEEE
No reproduction or networking permitted without license from IHS
Not for Resale

insulation, 555-556
low-voltage cable, 560-562
medium-voltage cable, 562-566
power-limited circuit cable, 562
festoon, 3
fiber optic, 3, 24
general description, 553-554
grounding of, 605-606
sheath losses, 605-606
installation, 579-586
aerial cable, 580-581
cable bus, 582
cable tray, 581-582
conduit, 582-583
direct burial, 583-584
hazardous (classified) locations, 584
installation procedures, 584-586
layout, 579
open runs, 581
open wire, 579-580
locating cable faults, 613-616
equipment and methods, 614
influence of ground fault resistance, 613-614
selection, 616
outer finishes, 566-569
metallic, 566-569
nonmetallic, 566
physical proterties of covering materials, 570
single and multiconductor constructions, 569-570
protection from transient overvoltage, 606-607
ratings
conductor selection, 571
elevated ambient temperature, 578
emergency overload criteria, 573-574
fault current criteria, 574-576
frequency criteria, 576
hot-spot temperature criteria, 578-579
load current criteria, 571-573
termination criteria, 579
voltage, 570-571
voltage drop criteria, 98-100, 574
specification, 617
splicing devices and techniques, 601-602
preassembled splices, 604
taped splices, 602-604
terminations. *See* Terminations
testing, 607-613
ac versus dc, 608
dc corona and its suppression, 612
factory tests, 608
field tests, 608-611
line voltage fluctuations, 612
megohmmeter test, 613-614
resistance evaluation, 612-613, 615
Cable trays, 17-18
CADD (computer-aided design and drafting), 18, 22
CAE (computer-aided engineering), 18
Capacitance test, 438-439
Capacitive stress control, 594
Capacitors, 86, 406, 658
banks, 435-437, 458
energizing, 428-431
de-energizing, 431-433
switching, 425-427, 433-434
harmonics, 416, 424-425, 461-462
power factor and, 393-394, 412-425
shunt, 349, 406, 413, 435
surge, 24, 354-355
trip devices, 193
Carrier receiver relay, definition of, 728
CAS (computer-aided specifications), 18
CEGS (U.S. Army Corps of Engineers Specifications), 18
Cement Industry Committee, 5
Checking relay, definition of, 721
Chopped-wave withstand test, 323-324
Circuit breakers
definitions of, 725, 727
high voltage, 133-138
insulated case, 489
interrupting capacity, 13
low voltage, 130, 256, 493-494
medium voltage, 133-138
molded case, 286, 299-300, 436, 488-489
power. *See* Power circuit breakers
standards, 129
switchgear, 482-491
Circuit switchers, 479

Copyright The Institute of Electrical and Electronics Engineers, Inc.
Provided by IHS under license with IEEE
No reproduction or networking permitted without license from IHS
Not for Resale

Codes and standards, 7-10, 56
environmental, 22
local, state, and federal codes and regulations, 8-9, 22
National Electrical Code (NEC), 1, 7
National Fire Protection Association (NFPA) standards, 7-8
standards and recommended practices, 9-10
Codes and Standards Committee, 5
Cogeneration, 4, 669-670
Cogging, 459
Coincident demand, definition of, 34
Commercial buildings, 1
Communication lines, 13
Communications equipment, 3, 24, 54
Compressed air systems, 4
Computer-aided design and drafting (CADD), 18, 22
Computer-aided engineering (CAE), 18
Computer-aided specifications (CAS), 18
Computer applications, 3, 18, 22-24, 52, 91, 95, 373-375
Computer data acquisition systems, 544
Condensers, 131
Conductors, 13, 16, 376-379, 554
Conduits, 18, 24, 99-100
spacing, 178-179
Connectors, 586-592
for aluminum, 587-591
for cables of various voltages, 591
electrical and mechanical operating requirements, 591-592
performance requirements, 591
types available, 586-587
Construction Specifications Institute (CSI), 17-18
Consulting-Specifying Engineer, 12
Contact resistance test, 286
Contaminants, 4
Continuity, 4
Continuity test, 286
Continuous-process loads, 33
Control devices and systems, 3, 22-23, 653-654
Control power disconnecting device, definition of, 721
Converter/inverter drives, 33
Copper conductors
characteristics, 554-556
constants, 176
impedance data, 180-181
temperature, 244
voltage drop, 99-100
Costs
estimating, 19-20, 703-719
classes of estimates, 704-705
equipment and material costs, 705
example, 706-718
general description, 703
information required, 703
installation costs, 705
preparing cost estimate, 704
standard estimating sheets, 20
life-cycle cost analysis, 14
minimum revenue requirements method, 30-31
"own and operate," 4
reliability analysis and, 30-31
Crabs (terminators), 601
Cranes, 3
Crawling, 459
Creep, 588
CSI. *See* Construction Specifications Institute; Current source inverters
Current
power component, 394-401, 410-411
reactive component, 394-401, 403, 405, 409-411, 425
source inverters (CSI), 531
transformers, 294-295, 549-550
waves, terminology, 323
Current balance relays, 202
definition of, 726
Current-limiting power fuses, 212-213

D

Data processing, 22, 33, 52
"Day skipper," 426
DC circuit breaker, definition of, 727
DC generator relay, definition of, 725
DC load-measuring reclosing relay, definition of, 727

Copyright The Institute of Electrical and Electronics Engineers, Inc.
Provided by IHS under license with IEEE
No reproduction or networking permitted without license from IHS
Not for Resale

DC motors, 112
DC overcurrent relay, definition of, 727
DC short-circuit current calculations, 170
DC step voltage test, 283
Dead-front construction, 13-14
Decelerating device, definition of, 722
Demand
  definition of, 33
  factor, definition of, 34
  meters, 548
Density switch or sensor, definition of, 726
Device 11, 233, 248
Device 27, 234
Device 32, 233
Device 40, 233
Device 46, 227, 233-234, 270
Device 47, 227, 234
Device 48, 233
Device 49, 227, 234, 267, 270
Device 49/50, 266
Device 50, 227, 234, 266, 274, 692
Device 50/51, 226-227, 234, 261, 266-267, 269, 692
Device 51, 227, 233-234, 267-270, 274, 692
Device 56, 233
Device 59, 234, 275
Device 60, 234, 274, 695
Device 63, 234, 692
Device 67, 226, 268-270, 279, 692, 695
Device 86, 227
Device 87, 227, 233-234, 268-269, 274, 692
Dielectric absorption test, 283, 288, 290
Dielectric strength test, 439
Differential relays, 198-202
  differential overcurrent relay, 198
    definition of, 726
  differential protection relay, definition of, 728
Digital multimeters (DMM), 543
Direct corona current, 612
Directional power relays, 198
  definition of, 723
Discharge switch, definition of, 722
Displacement power factor, 395-396
Distance relays, 206-207
  definition of, 723
Distortion factor, 448
Distortion power factor, 395-396
Distribution fuse cutouts, 212
Distribution systems. *See* Electric power distribution for industrial plants
Diversity factor, definition of, 34
DMM (digital multimeters), 543
Down conductors, 376-379
Drawings, 16, 18-19
  "as-built," 21
  manufacturer's or shop drawings, 19
  one line, 50-53, 126-127, 190, 229, 260, 708
Drives, adjustable speed. *See* Adjustable speed drives

E

ECOs (energy conservation opportunities), 642, 644-6455, 649
Edison base fuses, 214
Edison Electric Institute (EEI), 10
EEI (Edison Electric Institute), 10
EGSA (Electric Generating Systems Association), 10
Elapsed-time meters, 542
"Electrical Alerts," 9
Electrical conservation. *See* Energy management
Electrical Construction and Maintenance (EC&M), 12
Electrical Cost Data, 20
Electrically operated valve, definition of, 722
Electrical Maintenance Hints, 11
Electrical Systems Design, 12
Electrical Transmission and Distribution Reference Book, 11
Electric furnaces, 403
Electric Generating Systems Association (EGSA), 10
Electric Machines Committee, 5
Electric power distribution for industrial plants
  busways. *See* Busways
  cable. *See* Cable

Copyright The Institute of Electrical and Electronics Engineers, Inc.
Provided by IHS under license with IEEE
No reproduction or networking permitted without license from IHS
Not for Resale

codes and standards. *See* Codes and standards
contractor performance, 21
contracts, 20
costs. *See* Costs
design considerations, 15-19
  coordination of design, 15-16
  drawings, 18
  flexibility, 16-17
  specifications, 17-18
electrical conservation. *See* Energy management
electrical design elements for industrial plants, 4
electronic systems. *See* Electronic systems
energy management. *See* Energy management
environmental considerations, 3, 7, 22
estimating, 19-20. *See also* Costs
grounding. *See* Grounding
handbooks, 7, 10-11
harmonics. *See* Harmonics
Industry Application Society. *See* IAS
instruments and meters. *See* Instruments and meters
maintenance. *See* Maintenance
manufacturers' data, 12
motor starting effects on. *See* Motor control
overview, 1-24
periodicals, 11-12
planning. *See* Planning, system
power factor. *See* Power factor
professional liability, 7
professional registration, 6
programmable logic controller (PLC), 3, 24
protective devices. *See* Protective devices, application and coordination of
safety. *See* Safety
short-circuit current calculations. *See* Short-circuit current calculations
substations. *See* Substations
surge voltage protection. *See* Surge voltage protection
switching apparatus. *See* Switching apparatus for power circuits
system requirements for industrial plants, 3-4
technical files, 22
transformers. *See* Transformers
voltage considerations. *See* Voltage
Electric Power Research Institute (EPRI), 354
Electrification Council, The (TEC), 9
Electrodes, grounding, 381-382
Electromagnetic interference (EMI), 4, 13, 23-24, 375
Electromechanical trip devices, 291
Electronic power fuses, 214
Electronic systems, 22-24
  controllers, 23-24
  electromagnetic interference (EMI), 23-24
  harmonics, 23. *See also* Harmonics
  power supply disturbances, 23
Electrostatic Processes Committee, 5
Elevators, 3
Emergency/standby power systems, 4
EMI (electromagnetic interference), 4, 13, 23-24, 375
Enclosures, 13
Energy audit, 642
Energy conservation opportunities (ECOs), 642, 644-645, 649
Energy management, 641-672
  calculating energy savings, 646-652
    billing calculations, 647
    declining block rate and example, 647-648
    demand rate, 648-649
    motor loss, 650-651
    rate textbook, 646
    time of use rate, 649
    time value of money, 649-650
    transformer loss, 652
  cogeneration, 669-670
  electrical equipment, efficiencies of, 655-658
    capacitors, 658
    efficiency, 656
    equipment overview, 658

Copyright The Institute of Electrical and Electronics Engineers, Inc.
Provided by IHS under license with IEEE
No reproduction or networking permitted without license from IHS
Not for Resale

losses, 655
motors, 656-657
oversizing electrical equipment, 656
transformers, 657-658
finding energy conservation opportunities, 642
general description, 641
lighting, 660-669
ballasts, 663-666
controls, 668-669
daylight, 668
energy-saving techniques, 667-668
fluorescent, 662-663, 667
high-intensity discharge (HID), 663, 667-668
incandescent, 661-662, 667
luminaires, 665, 667
standards, 669
system approach, 661-667
load management, 653-655
controllers, 653-654
equipment audit and load profile, 654-655
metering, 658-660
peak shaving, 670
process, 643-646
standards, 669
Energy Systems Committee, 5
Engineering Times, 12
Engineers
cooperation among, 15-16
liability of, 7
Environmental containment of hazardous materials, 3
Environmental Protection Agency, 22
EPRI (Electric Power Research Institute), 354
Equalizer circuit breaker, definition of, 723
Equipment, 81-82
audit, 644-645, 654-655
deterioration, 57
efficiency of, 655-658
grounding. *See* Grounding
heat losses, 476-477
identification, 13
installation, 475-476
lighting. *See* Lighting
maintenance, testing, and safety, 476. *See also* Maintenance; Safety; Tests
motors. *See* Motors
power factor. *See* Power factor
protective devices. *See* Protective devices, application and coordination of
reliability data, 30
switching apparatus. *See* Switching apparatus for power circuits
transformers. *See* Transformers
Estimating, 19-20
standard estimating sheets, 20
see also Costs
Exciter relay, definition of, 725
Expanded radial systems, 37
Expansion, system, 4, 16-17, 31

F

Factory Mutual, 297, 475
Faraday cage, 377-378
Fault current, 4, 109-112, 574-576
Fault-detection devices, 13
Federal Register, 9, 13, 22
Festoon-cable systems, 3
Fiber-optic cables, 3, 24
Field application relay, definition of, 725
Field-changing contactor, definition of, 728
Field circuit breaker, definition of, 724
Field relay, definition of, 724
Filters, 24
Fire alarm systems, 3, 54
Fire hazards, 4, 14, 371, 375, 560
Fire Journal, 12
Firm power requirements, 29
Flame detector, definition of, 723
Flow switch, definition of, 727
Fluorescent lamps, 84, 95, 662-663
ballasts, 77, 667
power factor, 403
Food-handling facilities, 4
Fourier analysis, 95, 453
FOW (front-of-wave) protective level, 332
Franklin air terminal, 377-378
Frequency-matching device, definition of, 722

Copyright The Institute of Electrical and Electronics Engineers, Inc.
Provided by IHS under license with IEEE
No reproduction or networking permitted without license from IHS
Not for Resale

Frequency meters, 542
Frequency relays, 208
  definition of, 727
Front-of-wave (FOW) protective level, 332
Full-voltage starting of motors, 103, 106
Full-wave test, 323-324
Fuses, 130, 436-437, 479
  definition of, 211
  Edison base, 214
  electronic, 214
  low voltage (600 V and below), 214-221
    cartridge, 217, 219-221
    current limiting, 217-221
    let-through values, 217-219
    noncurrent limiting, 217
  maintenance, 258
  power (over 600 V), 212-214
    current limiting, 212-213
    distribution fuse cutouts, 212
    solid material, 213
  selection considerations, 221-222, 256
  switchgear, 481-482
  time delay, 219

G

Gapped silicon carbide arresters, 330
Gas-insulated substations (GIS), 349
Generation facilities, in plant, 4, 49-50
  rate and financial considerations, 50
  technical issues, 49
Generators, 131, 174
  harmonics, 459-460
  motor starting effects on, 104
  X/*R* range, 184
Geometric stress cone, 594
GIS (gas-insulated substations), 349
Glass Industry Committee, 5
Governor, definition of, 726
Ground detector relay, definition of, 726
Ground-fault detectors, 14
Ground-fault relays, 14, 295-296
Grounding
  cable, 605-606
  coefficient, definition of, 337
  device, definition of, 725
  earth, connection to, 379-383
    concrete-encased electrodes, 381-382
    existing electrodes, 381
    galvanic corrosion, 383
    made electrodes, 382
    recommended acceptable values, 380
    soil restivity, 380-383
  equipment grounding, 370-373
    computers, 373-375
  grid, 373
  ground resistance measurement, 383-389
    equipment and material, 385
    methods, 384-389
  lightning-protection grounding, 376-379
    air terminals, 377
    down conductors, 376-379
    early emission ionizing streamer, 378
    eliminator, deterrent system, 378
    zone of protection, 377
  mats, 58, 373
  static grounding, 375-376
  system grounding, 363-370
    design characteristics, 368-370
    reactance-grounded system, 368
    resistance-grounded systems, 366-367
    solidly grounded system, 368
    ungrounded systems, 365-366

H

Handbook of the National Electrical Code, 7
Handbook of Practical Electrical Design, 11
Handbooks, 7, 10-11
Harmonics, 56, 58, 95-96, 503, 681
  analysis, 466-467
    harmonic load flow, 466
    useful “rules of thumb,” 467
  characteristics, 447-449
    fundamental and harmonic power, 449
    harmonic analysis, 447
    harmonic distortion factor, 448
    relationship between harmonics and symmetrical components, 448-449
  definition of, 445-446
  effects of, 458-465

Copyright The Institute of Electrical and Electronics Engineers, Inc.
Provided by IHS under license with IEEE
No reproduction or networking permitted without license from IHS Not for Resale

capacitors, 461-462
electronic equipment, 462
loads, 459
metering, 462-463
motors and generators, 459-460
power cables, 460-461
power systems, 458-459
static power converters, 464
switchgear and relaying, 462
telephone interference, 464-465
transformers, 460
history of harmonic problems and solutions, 444-445
importance of understanding effects of, 443-444
industry standards, 471-472
mitigation techniques, 467-471
harmonic cancellation by harmonic injection, 471
multipulse converters, 470-471
shunt filters, 467-470
sources of, 33, 446-447
static power converter theory, 449-454
noncharacteristic harmonics, 454
single-phase converters, 450-451
three-phase, six-pulse converters, 451-454
system response characteristics, 455-458
balanced versus unbalanced system conditions, 456
capacitor banks and insulated cables, 455
load characteristics, 455
normal flow of harmonic currents, 456
parallel resonance, 456-457
resonance conditions, 456
series resonance, 456-458
system loading, effect of, 458
system short-circuit capacity, 455
Heating equipment, 3, 33, 85
Hermetic compressor motors, 90
power factor, 403, 414
HID (high-intensity discharge) lamps, 84-85, 91, 663, 667-668
power factor, 403
High-pressure contact switch, 480
High-pressure sodium lamps, 84-85, 403, 663, 667-668
High voltage, 62-64, 74, 80-81, 130
definition of, 1, 62, 129
Hi-pot test, 323-326
Hoists, 3

I

IAEA (International Association of Electrical Inspectors), 12
IAEI News, 12
IAS (Industry Application Society), 5-6
committees, 5
IEEE Color Books, 6
IBI (Intelligent Buildings Institute), 10
Identifying Retrofit Projects for Federal Buildings, 642
IEC (International Electrotechnical Commission), 10
IEEE
Color Books, 6
Industrial and Commercial Power Systems Department (I&CPSD), 363
Power Engineering Society (PES), 1
standards, 10, 14
IEEE Standard Dictionary of Electrical and Electronic Terms, 10
IES (Illuminating Engineering Society), 10, 12
Illuminating Engineering Society (IES), 10, 12
Impedance. *See* Short-circuit current calculations
Impedance diagram, 126
Impulse test, 325
Incandescent lamps, 84, 91, 93, 661-662, 667
power factor, 403
Incinerators, 3
Incomplete sequence relay, definition of, 725
Induction disk overcurrent relays, 193-194, 200
Induction furnaces, 52
Induction heating, 33
Induction melting, 33

Copyright The Institute of Electrical and Electronics Engineers, Inc.
Provided by IHS under license with IEEE
No reproduction or networking permitted without license from IHS
Not for Resale

Induction motors. *See* Motors, induction
Industrial Automation and Control Committee, 5
Industrial Drives Committee, 5
Industrial plants
  definition of, 1
  electrical design
    electrical design elements, 4
    system requirements, 3-4
    see also Electric power distribution for industrial plants
Industrial Power Converter Committee, 5
Industrial Power Systems Handbook, 11
Industrial processes, 4
Industrial substations. *See* Substations
Industry Application Society. *See* IAS
Infrared heating processes, 85
Inspection procedures, 282
Instantaneous overcurrent relays, 193, 200
  definition of, 725
Instrument and meters
  acceptance testing, 288
  auxiliary devices, 549-550
    current transformers, 294-295, 549-550
    shunts, 550
    transducers, 550
    voltage (potential) transformers, 295-296, 550
  basic objectives, 540
  energy consumption, monitoring, 658-660
  general description, 537-540
  ground resistance measurement, 383-389
  harmonics, metering, 462-463
  meters, 545-549
    ampere-squared (A^2) meters, 549
    demand meters, 548
    kilovarhour meters, 547-548
    kilowatthour meters, 545-547
    Q-hour meters, 548
    voltage-squared (V^2) meters, 548
  miscellaneous instruments, 544-545
    ground ohmmeters, 545
    megohmmeters, 545, 613-614
    oscilloscopes, 545
    phase rotation indicators, 545
    temperature indicators, 544
  portable instruments, 542-543, 659
    clamp-on ammeters, 543
    digital multimeters (DMM), 543
    volt-ohmmeters (VOM), 543
  power factor studies, 404
  recording instruments, 543-544
    computer data acquisition systems, 544
    load profile recorders, 544
    oscillographs, 544
    power line disturbance analyzers, 543-544
  switchboard and panel instruments
    ammeters, 541
    elapsed-time meters, 542
    frequency meters, 542
    power-factor meters, 404, 542
    synchroscopes, 542
    varmeters, 542
    voltmeters, 541
    wattmeters, 541
  typical installations, 551
Instrument transformers, 222-223, 303
Insulation, 101, 322-330. 341-342, 368
  inorganic, 555
  liquid, 328
  moisture and, 55, 558
  organic, 328, 555
  transformers, 515-518
Intelligent Buildings Institute (IBI), 10
Interlocking relay, definition of, 721
Internal faults, 246
International Association of Electrical Inspectors (IAEI), 12
International Electrotechnical Commission (IEC), 10
Inverter/converter drives, 33
Isolating contactor, definition of, 723
Isolation switches, 40, 478
Isolation transformers, 24

J

Jogging device, definition of, 726

Copyright The Institute of Electrical and Electronics Engineers, Inc.
Provided by IHS under license with IEEE
No reproduction or networking permitted without license from IHS
Not for Resale

K

Key-interlocking, 13
Kilovarhour meters, 547-548
Kilowatthour meters, 545-547

L

"Ladder-type logic," 24
Leak test, 439-440
Level switch, definition of, 727
Liability, professional, 7
  insurance, 7
Life-cycle cost analysis, 14
Lighting, 3, 76, 91
  arc discharge, 33
  ballasts, 22-23, 77, 84-85. 663-666
  busways, 626-627
  energy management. *See* Energy management, lighting
  fluorescent. *See* Fluorescent lamps
  incandescent. *See* Incandescent lamps
  liability and, 7
Lighting Design and Application (LD&A), 12
Lighting Handbook, 10-11
Lightning, 4, 311-315, 343-346, 348-349, 354, 369, 606
  grounding, 376-379
    air terminals, 377
    down conductors, 376-379
    early emission ionizing streamer, 378
    eliminator, deterrent, system, 378
    zone of protection, 377
Lightning impulse protective level (LPL), 332
Linear couplers, 201-202
Line switch, definition of, 728
Load-resistor contactor, definition of, 727
Loads, 4
  demand, 33
  forecasting, 34-35, 56
  load factor, 4, 34
  load-flow studies, 31, 58
  management, 653-655
  profile recorders, 544
  requirements and characteristics, 32-33
  survey, 32
Lockout relay, definition of, 728
Low-pressure sodium lamps, 84-85, 403, 663
Low voltage, 2, 62-63, 74, 78, 130
  cable, 560-562
  capacitor switching, 427-428
  definition of, 62, 129
  distribution systems, 29
    underground, 29
  protection, 235
  short-circuit current calculation, 158-169

M

Machine thermal relay, definition of, 725
Maintenance
  industrial plant facilities, 4, 15, 31, 54-56
  personnel, 13
  protective devices, 296-304
    completing the job, 303
    control wiring and operation, 303
    enclosed switches, 298-299
    fuses, 298
    general description, 296-297
    instrument transformers and wiring, 303
    low-voltage power circuit breakers, 300-301
    molded-case circuit breakers, 299-300
    motor control equipment, 302
    protective relays, 301-302
    replacement and spare parts, 298
    special maintenance, 303
    switchgear assemblies and motor-control centers, 302-303
Malpractice decisions, 7
Manual transfer or selector device, definition of, 724
Manufacturing equipment, 3
Marine Transportation Committee, 5
Master contactor, definition of, 721
Master element, definition of, 721
Master sequence device, definition of, 724
MASTERSPEC, 18
Materials handling systems, 3
Maximum continuous operating voltage (MCOV), 333-334, 336, 338

Copyright The Institute of Electrical and Electronics Engineers, Inc.
Provided by IHS under license with IEEE
No reproduction or networking permitted without license from IHS
Not for Resale

Maximum demand, definition of, 34
Maximum system voltage, definition of, 61
MCC (motor control centers), 275, 288, 526-527
Mechanical condition monitor, definition of, 724
Mechanical Cost Data, 20
Medical facilities, 1-2, 4
Medium voltage, 62-63, 74, 78-81, 130, 233-235
  cable, 562-566
  capacitor switching, 428-434
  definition of, 2, 62, 129
Megohmmeters, 545, 613-614
Mercury lamps, 84-85, 403, 663, 667
Metal halide lamps, 84-85, 403, 663, 668
Metal Industry Committee, 5
Meters. *See* Instruments and meters
Mining Industry Committee, 5
Mining Safety Standards Committee, 5
Molded-case circuit breakers, 286, 299-300, 436, 488-489
Moles (terminators), 601
Motor Applications and Maintenance Handbook, 11
Motor control, 103-106
  control circuits, 527
  maintenance, 302-303
  motor control centers (MCC), 275, 288, 526-527
  overload protection, 527-528
  solid-state control, 53, 103, 112, 524-526, 528
  starters over 600 V, 522
  starters 600 V and below, 522-526
    across-the-line, 522
    combination across-the-line, 523
    controllers for dc motors, 526
    multispeed, 524
    reduced voltage, 523-524
    slip ring, 524
    solid-state reduced-voltage, 524-526
  starting calculations, 31, 58
Motor and Generator Committee, 81
Motor-generator sets, 24
Motors, 52, 76, 650-651
  adjustable speed drives. *See* Adjustable speed drives
  auxiliary, 728
  dc, 112, 526
  harmonics, 23, 459-460. *See also* Harmonics
  horsepower limits, 92
  induction, 81-83, 112, 131-132, 174, 184, 248, 410
  power factor, 403, 413-414, 656
  protection requirements
    large motors, 245-249
    small motors, 249-250
  reactance, 125, 174
  squirrel-cage, 102, 111, 413-414
  starting. *See* Motor control
  synchronous, 83, 102, 111, 131, 174, 184, 409
Movable equipment, 3
Multifunction device, definition of, 722
Murray loop test, 615

N

National Council of Engineering Examiners, 6
National Electrical Code (NEC), 1, 7
National Electrical Contractors' Association (NECA), 20
National Electrical Manufacturers Association (NEMA), 9
National Electrical Safety Code (NESC), 13
National Fire Protection Association (NFPA), 7-8, 12
National Institute of Occupational Safety and Health (NIOSH), 9
National Professional Certificate, 6
National Society of Professional Engineers (NSPE), 6, 12
National Weather Service, 642
NEC (National Electrical Code), 1, 7
NECA (National Electrical Contractors' Association), 20
Negative-sequence voltage relays, 206
NEMA (National Electrical Manufacturers Association), 9

--`,,`,,`-`-`,,`,,`,`,,`---

Copyright The Institute of Electrical and Electronics Engineers, Inc.
Provided by IHS under license with IEEE
No reproduction or networking permitted without license from IHS Not for Resale

NESC (National Electrical Safety Code), 13
NFGS (U.S. Naval Facilities Engineering Command Guide Specifications), 18
NFPA (National Fire Protection Association), 7-8, 12
NFPA Handbook of the National Electrical Code, 7
NIOSH (National Institute of Occupational Safety and Health), 9
Nominal system voltage, definition of, 61
Nominal utilization voltage, definition of, 62
Nonlinear loads, 23
Notching device, definition of, 726
NSPE (National Society of Professional Engineers), 6, 12
Nuisance tripping, 14

O

Occupational Safety and Health Act, 8
Occupational Safety and Health Administration (OSHA), 8-9
Ohm's law, 112, 443
Oil circuit breakers, 286
One-line diagrams, 50-53, 126-127, 190, 229, 260, 708
On-line, real-time computer systems, 3
Operating mechanism, definition of, 728
Operation, system, 4
  personnel, 13
Oscillographs, 544
Oscilloscopes, 545
OSHA (Occupational Safety and Health Adminitration), 8-9
"OSHA Rule on Lockout/Tagout," 13
Outdoor substations, 16, 22, 45, 343-345
Outdoor switchgear, 492
Out-of-step protective relay, definition of, 727
Overcurrent protective devices. *See* Circuit breakers; Fuses; Protective devices, application and coordination of
Overhead distribution, 16, 22, 79, 347-349
  recommended conductor spacing, 175
Overpotential test, 283, 286, 288, 290
Overspeed device, definition of, 722
Overvoltage relays, 205-206
  definitions of, 726-727

P

PALC (Production and Application of Light) Committee, 5
Panel and switchboard instruments, 540-542
Parallel resonance, 456-457
Part-winding starter, 103
PCB equipment replacement, 58, 517
Peak load, definition of, 33
Peak-shaving, 4, 670
Percentage differential relays, 201
Periodicals, 11-12
Permissive control device, definition of, 726
PES (Power Engineering Society), IEEE, 1
Petroleum and Chemical Industry Committee, 5
Phase-angle measuring protective relay, definition of, 727
Phase-balance current relay, definition of, 725
Phase-balance voltage relay, definition of, 725
Phase-controlled switching devices, 23
Phase-cross voltage test, 286, 290
Phase-rotation tests, 286, 290, 545
Phase-sequence voltage relay, definition of, 725
Phase unbalance or reversal, 247-248
Pickup test, 286
Pilot-wire relays, 205-206
  definition of, 728
Piping for grounding, 381
Planning, system, 27-58
  basic design considerations
    costs. *See* Costs
    flexibility, 4, 16-17, 31
    maintenance, 31
    reliability analysis of plant distribution system, 30
    reliability of primary utility supply service, 28-30

Copyright The Institute of Electrical and Electronics Engineers, Inc.
Provided by IHS under license with IEEE
No reproduction or networking permitted without license from IHS
Not for Resale

safety, 27-28
simplicity of operation, 31
voltage regulation, 31
communications, 54
equipment locations, 44
generation, 49-50
rate and financial considerations, 50
technical issues, 49
load definition and forecasting, 31-35
demand, 33
forecasting, 34-35
load requirements and characteristics, 32-33
load survey, 32
maintenance, 54-56
plant distribution systems, 35-44
expanded radial system, 37
primary loop system. *See* Primary loop system
primary selective system, 37
reliability analysis of, 30
ring bus, 43-44
secondary selective system, 40-42
secondary spot network, 42-43
simple radial system, 36, 46, 519
plant utilization voltage, 44-45
power system modernization and evaluation, 56-58
criteria for, 57-58
protection and protective-device coordination, 53-54
short-circuit analysis. *See* Short-circuit current calculations
single-line diagram, 50-53
utility supply service, primary, 45-49
reliability of, 28-30
Plant Engineering, 12
PLC (programmable logic controller), 3, 24
Plug-in busways, 3, 17, 624-626
Plumbing facilities, 3
Polarity or polarizing voltage device, definition of, 724
Portable cord systems, 3
Portable instruments, 542-543, 659
Position changing mechanism, definition of, 727
Position switch, definition of, 724
Potheads, 596
Power circuit breakers, 300, 436, 487-488, 490-491, 493-494
acceptance testing, 286
basic impulse insulation levels (BILs), 323
inspection and test form, 287
Power conditioning systems, 4, 24
Power conversion devices, 33, 434, 443, 446, 449-454
Power Electronics Devices and Components Committee, 5
Power Engineering Society (PES), IEEE, 1
Power factor, 393-440
angle, 400, 411
benefits of improvement, 397-402
power system losses, 401-402
release of system capacity, 398-399
utility costs, 398
voltage improvement, 399-401
capacitor standards and operating characteristics, 393-394, 422-425
capacitor ratings, 422-423
harmonics, effect on capacitors, 424-425, 461-462
maximum voltage, 423
operating characteristics, 425
temperature, 424
time to discharge, 424
capacitors with induction motors, 412-422
effectiveness of motor-capacitor method, 413-414
harmonic resonance, 416
inrush current due to out-of-phase reclosing, 417-420
limitations of capacitor-motor switching, 415-416
selection of capacitor, 420-421
selection of motors and connection point, 414-415
self-excitation considerations, 416-417
controls for switched capacitors, 425-427
current control, 426-427
kilovar controls, 427
time-switching, 425-426
voltage control, 426

Copyright The Institute of Electrical and Electronics Engineers, Inc.
Provided by IHS under license with IEEE
No reproduction or networking permitted without license from IHS
Not for Resale

voltage sensitive with time bias, 427
current and power flow fundamentals, 394-397
definition of power factor, 395-396
impact of power factor on system capability, 397
leading and lagging power factor, 396
general description, 56, 393-394
improving, methods of calculating, 410-411
improving, techniques for, 88, 405-410
controlling vars using capacitors, 405-409
induction versus synchronous motors, 410
synchronous motors, 409
inspection and field testing of power capacitors, 438-440
instruments and measurements for power-factor studies, 404, 542
location of reactive power supply, 411-412
protection of capacitors and capacitor banks, 435-437
resonance and harmonics, 437-438
utility switching and variable frequency drives, 437
transients and capacitor switching, 427-434
low-voltage switching, 427-428
medium-voltage switching, 428-434
static power converters, 434
typical plant power factor, 402-403
utilization equipment, 403
Power factor relay, definition of, 725
Powerhouse loads, 52-53
Power quality, 23, 56-57, 679-681
Power System Relay Committee, 463
Power systems. *See* Electric power distribution for industrial plants
Power Systems Engineering Committee, 5
Power Systems Protection Committee, 5
Pressure-sensitive relays, 208
Pressure switch, definition of, 726
Primary loop system, 37-40, 519
closed-loop operation, 38-39
economics, 40
fault isolation, 39-40
open-loop operation, 39
Primary selective system, 37
Process control systems, 3, 22
Production and Application of Light (PALC) Committee, 5
Programmable logic controller (PLC), 3, 24
Protective devices, application and coordination of
acceptance testing. *See* Acceptance testing (commissioning), protective devices
analysis of system behavior and protection needs, 187-192
analytical restraints, 190-192
distortion of phase voltages and currents during faults, 188-189
general description, 187
grounded and ungrounded systems, 187-188
practical limits of protection, 192
application, principles of, 223-238
large-plant relay systems, 225-235
load generation, relay systems for plant with, 235-238
small-plant relay systems, 224-225
auxiliary relays, 209
current balance relays, 202, 726
differential relays, 198-202
buses, 201-202
motors and generators, 199
transformers, 199-201
directional relays, 198
directional ground relay, 198
directional overcurrent relay, 198
directional power relay, 198
distance relays, 206-207
examples, 260-281
2.4 kV system relaying, 270
13.8 kV system relaying, 261-270
480 V system protective equipment, 275-281
feeder conductors, protection requirements, 244-245
frequency relays, 208
fuses. *See* Fuses
general description, 192-193

Copyright The Institute of Electrical and Electronics Engineers, Inc.
Provided by IHS under license with IEEE
No reproduction or networking permitted without license from IHS
Not for Resale

ground-fault relaying, 203-205
neutral connected relaying, 204-205
residual connections, 203
zero-sequence sensor (core balance), 204
maintenance. *See* Maintenance, protective devices
motors, protection requirements
large motors, 245-249
small motors, 249-250
overcurrent relays, 193-195
with voltage restraint or voltage control, 195
performance limitations, 222-223
instrument transformers, 222-223, 303
load current and voltage wave shape, 222
phase-sequence or reverse-phase relays, 207
pilot-wire relays, 205-206
pressure-sensitive relays, 208
purpose, 185-187
equipment capabilities, 186
personnel safety, 187
plant operation, 185-186
responsible planning, importance of, 186-187
records, 304
replica-type temperature relays, 208-209
synchronism-check and synchronizing relays, 205
temperature-sensitive relays, 208
time–current coordination curves. *See* Time–current coordination curves
transformers, protection requirements, 199-201, 238-244, 692-695
maximum overcurrent protection, 238-239
withstand limits, 239-240
trip devices, direct-acting, for low-voltage power circuit breakers, 209-211
electromechanical, 209-210
solid state, 209-211
voltage relays, 206
volts per hertz overexcitation relays, 207
Proximity effect, 461
Pulp and Paper Industry Committee, 5

Q

Q-hour meters, 548

R

Raceways, 17
Radial system, 36, 46, 519
Radio-frequency interference (RFI), 4
Rain shields, 598
Range A system voltage tolerance limits, 62, 69-71, 76
Range B system voltage tolerance limits, 62, 68-71
Rate-of-rise relays, definition of, 721
Reactance, 110-111, 125-126, 140, 174, 178
diagram examples, 148-149, 158, 164, 169, 176-177
Reactive power, 394-401, 403, 405, 409-411, 425
Reactors, 103
Real-time, on-line computer systems, 3
Receptacles, 3
Reclosing relay, definition of, 727
Rectification failure relay, definition of, 725
Rectifiers, 23, 95
Recycling facilities, 3
Refrigeration equipment, 4
Regulating device, definition of, 728
Regulator compensation, 67
Regulatory requirements, 4
Relays. *See* Protective devices, application and coordination of
Reliability, 4, 45, 58
Resistance, 126, 176-177
diagrams, 169
Resistance heating devices, 85
Resistance temperature detectors (RTDs), 528
Resistance welding, 33, 93
Resistor starters, 103
Resonance, 456-458
Reverse-phase relays, 206
definition of, 725
Reversing device, definition of, 721
RFI (radio-frequency interference), 4

Copyright The Institute of Electrical and Electronics Engineers, Inc.
Provided by IHS under license with IEEE
No reproduction or networking permitted without license from IHS
Not for Resale

Rheostat, definition of, 726
Ring bus, 43-44
RLC circuits, 110
RMS (root-mean-square), 1
RMS short-circuit-current interrupting duty, 134, 137
Robotic equipment, 3, 23
Root-mean-square (rms), 1
Rotating machinery, 109-110, 349-355
  acceptance testing, 288, 290
  protection, 349-350
  reactance multipliers, 131-132
  see also names of specific devices
RTD (resistance temperature detectors), 528
Rubber and Plastics Industry Committee, 5
Running circuit breaker, definition of, 724
Rural Electric Power Committee, 5

S

Safety, 12-14
  appliances and equipment, 4, 12, 14, 27-28, 45, 370, 375
  liability and, 7
  operational considerations, 14
  personnel, 4, 12-13, 27-28, 187, 297, 369-371, 373, 375, 636
Sanitation facilities, 3
SCR controlled ovens, 33
SE (separation effect), 340
Secondary-selective unit substation, 519
Secondary-spot network, 42-43, 520
Security systems, 3-4, 54
Seismic requirements, 4
Self-excitation, 416-417
Semiconductor devices. *See* Solid-state devices
Separate excitation device, definition of, 723
Separation effect (SE), 340
Series resonance, 457-458
Service layout, 18
Service voltage, definition of, 62
Shield continuity test, 283
Shielding, 24, 563-566
Short-circuit current calculations, 53, 58, 682
  dc systems, 170
  detailed procedure, 124-138
    step 1: prepare system diagrams, 126-127
    step 2: collect and convert impedance data, 126, 128
    step 3: combine impedances, 128
    step 4: calculate short-circuit current, 128-138
  examples
    low-voltage system, 158-169
    power system with several voltage levels, 138-158
  fundamentals of, 112-115
    basic equivalent circuit, 114-115
    purpose of calculations, 113
    type of short circuit, 113-114
  general description, 109
  impedance data, typical, 173-184
  restraints of simplified calculations, 115-124
    decrement factor, 117-118
    impedance elements, 115-116
    other analytical tools, 121
    practical impedance network synthesis, 118-121
    respecting the imposed constraints, 122
    switching transients, 116-118
  sources of fault current, 109-112
    induction machines, 111-112
    motors, 112
    synchronous generators, 110-111
    synchronous motors and condensers, 111
    utilities, 112
Short-circuiting devices
  brush operating, 724
  definition of, 725
Short-circuit withstand limits, 186
Shunt capacitors, 349, 406, 413, 435
Shunting switch, definition of, 722
Signal systems, 3-4
Signing systems, 4
Simple radial system, 36, 46

Copyright The Institute of Electrical and Electronics Engineers, Inc.
Provided by IHS under license with IEEE
No reproduction or networking permitted without license from IHS
Not for Resale

"Sine Wave Distortions on Power Systems and the Impact on Protective Relaying," 463
Single-line diagrams, 50-53, 126-127, 190, 229, 260, 708
Site requirements, 4, 520, 690-691
Skin effect, 461
Skirts, 598
Slip-ring short-circuiting device, definition of, 724
Smoke detection, 3, 14, 54
Society of Fire Protection Engineers (SFPE), 7
Soil resistivity, 380-383
Solid-material power fuses, 213
Solid-state devices
  harmonics and, 23, 443, 447
  motor controllers, 53, 103, 112, 524-526, 528
  relays, 193-195, 204, 209-211
  voltage variations and, 86, 93
Sound-level requirements, 4
Space-conditioning equipment, 3
Spacer cable, 581
Sparing transformers, 41-42, 48
Specifications, 17-18
SPECTEXT II computer program, 18
Spectrum, 11-12
Speed-matching device, definition of, 722
SPFE (Society of Fire Protection Engineers), 7
SPFE Handbook of Fire Protection Engineering, 7
SPL (switching impulse protective level), 332
Splicing devices and techniques, 601-602
  preassembled splices, 604
  taped splices, 602-604
Squirrel-cage motors, 102, 111, 413-414
Stage system test, 296
Standard Handbook for Electrical Engineers, 10
Standards. *See* Codes and standards
Standby/emergency power systems, 4
Starters, motor. *See* Motor control
Starting circuit breaker, definition of, 721
Starting-to-running transition contactor, definition of, 722
Static power converters, 434, 443, 446, 449-454
Step potential or voltage, 369, 373
Stopping device, definition of, 721
Stress cone, 594
Substations, 29, 41, 45, 56, 67, 78, 80
  advantages of, 520
  application guides, 520-521
  construction stage, 697-699
    final testing, 697-698
    inspection during construction, 697
    plan for energizing, 698-699
    project management, 697
  design stage, 689-696
    detailed schedule, 690
    drawing approvals, 696
    primary switchhouse, 696
    relaying and control design, 691-696
    site design, 690-691
    site testing, 690
  effectively shielded, 343-344
  general description, 675-678
  justification of substation, 675-676
  non-effectively shielded, 344-345
  operating stage, 699-700
    documentation, 699-700
    operating requirements, 699
  outdoor, 16, 22, 45, 343-3451s
  planning stage, 678-689
    administrative considerations, 688
    conceptual planning considerations, 679-682, 688
    contract, 688
    definition of load, 678
    facility and substation ownership, 686-687
    on-site generation, 678
    operation and maintenance, 687-688
    plant's primary switchhouse, 685-686
    specific considerations, 682-685
  selection and location, 520, 690-691
  time requirements, 688
  transformers, 506
  types, 519-520
Subtransient reactance, 111, 140

Copyright The Institute of Electrical and Electronics Engineers, Inc.
Provided by IHS under license with IEEE
No reproduction or networking permitted without license from IHS Not for Resale

Surge voltage protection
arresters, 24, 312, 330-336
acceptance testing, 290
basis of arrester rating, 331-332
classes, 335, 338-340
discharge-current withstand capability, 335-336
maximum continuous operating voltage (MCOV), 336
metal-oxide arresters, 331-332
protective characteristics, 332-335
switching surge durability, 338
temporary overvoltage (TOV) durability, 336-338
voltage rating, 338
capacitors, 24, 354-355
component protection, 343-355
aerial cable, 348-349
dry-type transformers, 346-347
gas-insulated substations (GIS), 349
metal-clad switchgear, 345-346
outdoor substations, 343-345
overhead lines, 347-348
rotating machines, 349-355
shunt capacitor banks, 349
underground cables, high-voltage, 349
general description, 311-315, 340-341
insulation coordination, 341-342
insulation voltage withstand characteristics, 322-330
insulation tests and ratings, 322-327
physical properties affecting insulation strength, 327-330
traveling-wave behavior, 315-322
amplification phenomena, 321-322
surge-voltage propagation, 315-317
surge-voltage reflection, 317-320
Switchboard assemblies, 283
Switchboard and panel instruments, 540-542
Switchgear
acceptance testing, 283
application guides, 496-498
basic insulation levels (BIL), 325
classification, 492
control power, 498, 500-502
general description, 492
metal enclosed, 492-494
interrupter, 494
low-voltage power circuit breaker, 493-494
metal clad, 345-346, 493
metal-enclosed bus, 494
outdoor, 492
ratings, 494-496
see also Switching apparatus for power circuits
Switchgear and Control Handbook, 11
Switching apparatus for power circuits
basic insulation levels (BILs), 325
circuit breakers, 482-491
over 600 V, 483-486
600 V and below, 487-489
classifications, 478
fuses, 481-482
application considerations, 482
type and rating basis, 481-482
mainstream, 302-303
service protectors, 489
switches
isolating, 40, 478
load interrupting, 478-479
600 V and below, 479-481
transfer, 481
see also Switchgear
Switching impulse protective level (SPL), 332
Switching surges, 311, 349, 354
Switching surge withstand test, 323, 326
Synchronizing or synchronism-check devices, 205
definition of, 723
Synchronous motors, 83, 102, 111, 131, 174, 184, 409
Synchronous reactance, 111
Synchronous-speed device, definition of, 722
Synchroscopes, 542
System voltage definitions, 61-62

T

TEC (The Electrification Council), 9
Telemetering device, definition of, 727

Copyright The Institute of Electrical and Electronics Engineers, Inc.
Provided by IHS under license with IEEE
No reproduction or networking permitted without license from IHS
Not for Resale

Telephone influence factor (TIF), 464-465
Temperature control device, definition of, 723
Temperature indicators, 544
Temperature sensitive relays, 208
Temporary overvoltage (TOV) durability, 336-338
Terminations, 592-601
  definitions, 592-593
  devices and methods, 598-600
  jacketed and armored cable connectors, 600
  nonshielded, 594
  performance requirements, 601
  purpose, 592
  separable insulated connectors, 600-601
  shielded, 594
  termination classes, 594-597
Tests
  acceptance. *See* Acceptance testing
  cable. *See* Cable, testing
  capacitance, 438-439
  chopped-wave withstand, 323-324
  contact resistance, 286
  continuity, 286
  dc step voltage, 283
  dielectric absorption, 283, 288, 290
  dielectric strength, 439
  full wave, 323-324
  hi-pot, 323-326
  impulse, 325
  insulation, 283, 286
  leak, 439-440
  megohmmeter, 613-614
  Murray loop, 615
  overpotential, 283, 286, 288, 290
  phase-rotation and phase-cross voltage, 286, 290
  pickup, 286
  rotation, 290
  shield continuity, 283
  substation, 697-698
  switching surge withstand, 323, 326
  time–current characteristics, 286
  trip, 286
  turns ratio, 283
  Varley loop, 615
  vibration, 290
Textile, Fiber, and Film Industry Committee, 5
Thyristors, 23, 86, 407-409, 464
TIF (telephone influence factor), 464-465
Time–current coordination curves, 250-260
  device performance, 251-259
    fuses, 256
    ground-fault protection, 257-259
    instaneous relays, 255
    low-voltage circuit breakers, 256
    time-delay relays, 252-255
  need and value, 250-251
  preparing for coordination study, 259-260
Time-delay fuses, 219
Time-delay starting or closing relay, definition of, 721
Time-delay stopping or opening relay, definition of, 726
Time overcurrent relays, 204-205
  definition of, 725
Torque control, 530-531
Total cost, 703
Total Energy Management, 642
Total energy provisions, 4
Total harmonic distortion, 448
Touch potential or voltage, 369, 373
TOV (temporary overvoltage) durability, 336-338
Transactions of the IAS, 5, 12
Transducers, 550
Transfer switches, 481
Transformers
  acceptance testing, 283
  accessories, 518
  autotransformers, 103, 504-506, 523, 525
  classifications, 503-506
  connections, 510, 513
  current, 294-295, 549-550
  distribution, 78, 503-506
  dry type, 325, 346-348, 508-509, 515-517
  efficiencies, 652, 657-658
  harmonics, 23, 460
  impedances, 125, 513, 515

--`,,`,,`-`-`,,`,,`,`,,`---

Copyright The Institute of Electrical and Electronics Engineers, Inc.
Provided by IHS under license with IEEE
No reproduction or networking permitted without license from IHS Not for Resale

instrument, 222-223, 303
insulation, 515-518
isolation, 24
K-factor rated, 503-504
liquid immersed, 508-510, 514-518
noise of, 22
power, 503-506
protection, 199-201, 238-244, 692-695
ratings, power and voltage, 507-515
sound levels, 519
sparing, 41-42, 48
specifications, 506-507
substation, 506
termination facilities, 518-519
voltage, 295-296, 550
voltage drop, 101-102
voltage taps, 510
X/*R* ratio, 184
Transformer thermal relay, definition of, 725
Transient overvoltages. *See* Surge voltage protection
Transient reactance, 111
Transient recoverg voltage (TRV), 486
Transistors, 86
Transportation requirements, industrial plant, 3
Trip devices, 209-211
Triplens, 449
Tripping or trip-free relay, definition of, 728
Trip test, 286
Trolley busways, 3, 17, 627
True cost, 703
TRV (transient recovery voltage), 486
Turning gear engaging device, definition of, 725
Turns ratio test, 283

U

UL (Underwriters Laboratories), 9, 14
Undercurrent relay, definition of, 724
Underground systems, 16, 22, 349, 572-573
Underground Systems Reference Book, 11
Underpower relay, definition of, 724
Underspeed device, definition of, 722
Undervoltage, 247
Undervoltage relays, 206
definition of, 723
Underwriters Laboratories (UL), 9, 14
Ungrounded systems, 365-366
Uninterruptible power supply (UPS), 4, 23-24
Unit sequence starting relay, definition of, 724
Unit sequence switch, definition of, 722
Unit substations. *See* Substations
U.S. Army Corps of Engineers, 18
U.S. Department of Energy, 9, 642
U.S. Department of Labor, 8, 13
U.S. Naval Facilities Engineering Command, 18
Utilities, electrical, 15, 49, 50, 78-81, 112, 692
costs, 398
service layout, 18
substations. *See* Substations
typical generation, transmission, and distribution system, 66
Utilization equipment. *See* Equipment
Utilization voltage, definition of, 62

V

Vacuum systems, 4
Value engineering, 14
Var demand, reducing, 405
Variable speed drives. *See* Adjustable speed drives
Varley loop test, 615
Varmeters, 542
Ventilation equipment, 3
Voltage
cable, 570-571
classes, 2, 62
control in electrical power systems, 66-78
distribution transformer taps, use of, 75-78
power transmission and distribution in utility systems, 66-68

Copyright The Institute of Electrical and Electronics Engineers, Inc.
Provided by IHS under license with IEEE
No reproduction or networking permitted without license from IHS
Not for Resale

voltage profile limits for a regulated distribution system, 71-72
voltage tolerance limits, 68-72
definitions, 61-62
drop. *See* Voltage drop
harmonics. *See* Harmonics
improvement of voltage conditions, 87-88
nomenclature, 72
single-phase systems, 72-73
three-phase systems, 72-73
nominal, 61-62
nonstandard, 73-75
standard, 62-66, 73-75, 129
phase-voltage unbalance in three-phase systems, 89-91
causes, 89
effect, 89-91
measurement, 89
regulation, 4, 24
relays, 206
sags and flicker, 91-95, 681
fault-clearing, 93-95
flicker limits, 93
motor starting, 91-93
selection, 78-81
high voltage, 80-81
low voltage, 78
medium voltage, 78-81
source inverters (VSI), 531
standard nominal voltages, 62-66, 73-75, 129
Canada, 66
United States, 62-64, 75
surge. *See* Surge voltage protection
taps, 510
transformers, 295-296, 550
utilization, 44-45
variations, effects on low- and medium-voltage equipment, 82-86
capacitors, 86
electron tubes, 85
fluorescent lamps, 84
HID lamps, 84-85
incandescent lamps, 84
induction motors, 82-83, 248
infrared heating processes, 85
resistance heating devices, 85
solenoid-operated devices, 86
solid-state equipment, 86, 93
synchronous motors, 83
waves, terminology, 323
Voltage balance relays, 206
definition of, 726
Voltage and power directional relay, definition of, 728
Voltage directional relay, definition of, 728
Voltage drop
calculation of, 96-106
busway, 101, 629-632
cable, 98-100, 574
general mathematical formulas, 96-98
motor-starting, 102-106
transformer, 101-102
considerations in locating low-voltage power source, 86-87
Voltage-squared (V^2) meters, 548
Voltmeters, 541
Volts per hertz relay, definition of, 723
VSI (voltage source inverters), 531

W

Warning signs, 28
Waste handling facilities, 3, 52
Wattmeters, 541
Welding, 33, 52, 57, 402, 446, 633-634

X

X/*R* ratio, 184

Copyright The Institute of Electrical and Electronics Engineers, Inc.
Provided by IHS under license with IEEE
No reproduction or networking permitted without license from IHS Not for Resale