# IEEE Guide for Planning DC Links Terminating at AC Locations Having Low Short-Circuit Capacities

Sponsor

**Transmission and Distribution Committee
of the
IEEE Power Engineering Society**

Reaffirmed 9 December 2003
Approved 26 June 1997

**IEEE Standards Board**

**Abstract:** Guidance on the planning and design of dc links terminating at ac system locations having low short-circuit capacities relative to the dc power infeed is provided in this guide. This guide is limited to the aspects of interactions between ac and dc systems that result from the fact that the ac system is "weak" compared to the power of the dc link (i.e., ac system appears as a high impedance at the ac/dc interface bus). This guide contains two parts: Part I, AC/DC Interaction Phenomena, classifies the strength of the ac/dc system, provides information about interactions between ac and dc systems, and gives guidance on design and performance; and Part II, Planning Guidelines, considers the impact of ac/dc system interactions and their mitigation on economics and overall system performance and discusses the studies that need to be performed.
**Keywords:** ac/dc interaction, fault recovery, frequency instability, harmonic transfer, instability, low short-circuit ratio (SCR), power, resonance, subsynchronous torsional interaction, temporary overvoltage (TOV), voltage instability

---

The Institute of Electrical and Electronics Engineers, Inc.
345 East 47th Street, New York, NY 10017-2394, USA

Copyright © 1997 by the Institute of Electrical and Electronics Engineers, Inc.
All rights reserved. Published 1997. Printed in the United States of America.

ISBN 1-55937-936-7

No part of this publication may be reproduced in any form, in an electronic retrieval system or otherwise, without the prior written permission of the publisher.

Copyright The Institute of Electrical and Electronics Engineers, Inc.
Provided by IHS under license with IEEE
No reproduction or networking permitted without license from IHS

Not for Resale

**IEEE Standards** documents are developed within the IEEE Societies and the Standards Coordinating Committees of the IEEE Standards Board. Members of the committees serve voluntarily and without compensation. They are not necessarily members of the Institute. The standards developed within IEEE represent a consensus of the broad expertise on the subject within the Institute as well as those activities outside of IEEE that have expressed an interest in participating in the development of the standard.

Use of an IEEE Standard is wholly voluntary. The existence of an IEEE Standard does not imply that there are no other ways to produce, test, measure, purchase, market, or provide other goods and services related to the scope of the IEEE Standard. Furthermore, the viewpoint expressed at the time a standard is approved and issued is subject to change brought about through developments in the state of the art and comments received from users of the standard. Every IEEE Standard is subjected to review at least every five years for revision or reaffirmation. When a document is more than five years old and has not been reaffirmed, it is reasonable to conclude that its contents, although still of some value, do not wholly reflect the present state of the art. Users are cautioned to check to determine that they have the latest edition of any IEEE Standard.

Comments for revision of IEEE Standards are welcome from any interested party, regardless of membership affiliation with IEEE. Suggestions for changes in documents should be in the form of a proposed change of text, together with appropriate supporting comments.

Interpretations: Occasionally questions may arise regarding the meaning of portions of standards as they relate to specific applications. When the need for interpretations is brought to the attention of IEEE, the Institute will initiate action to prepare appropriate responses. Since IEEE Standards represent a consensus of all concerned interests, it is important to ensure that any interpretation has also received the concurrence of a balance of interests. For this reason, IEEE and the members of its societies and Standards Coordinating Committees are not able to provide an instant response to interpretation requests except in those cases where the matter has previously received formal consideration.

Comments on standards and requests for interpretations should be addressed to:

Secretary, IEEE Standards Board
445 Hoes Lane
P.O. Box 1331
Piscataway, NJ 08855-1331
USA

Note: Attention is called to the possibility that implementation of this standard may require use of subject matter covered by patent rights. By publication of this standard, no position is taken with respect to the existence or validity of any patent rights in connection therewith. The IEEE shall not be responsible for identifying all patents for which a license may be required by an IEEE standard or for conducting inquiries into the legal validity or scope of those patents that are brought to its attention.

Authorization to photocopy portions of any individual standard for internal or personal use is granted by the Institute of Electrical and Electronics Engineers, Inc., provided that the appropriate fee is paid to Copyright Clearance Center. To arrange for payment of licensing fee, please contact Copyright Clearance Center, Customer Service, 222 Rosewood Drive, Danvers, MA 01923 USA; (508) 750-8400. Permission to photocopy portions of any individual standard for educational classroom use can also be obtained through the Copyright Clearance Center.

Copyright The Institute of Electrical and Electronics Engineers, Inc.
Provided by IHS under license with IEEE
No reproduction or networking permitted without license from IHS
Not for Resale

# Introduction

(This introduction is not part of IEEE Std 1204-1997, IEEE Guide for Planning DC Links Terminating at AC Locations Having Low Short-Circuit Capacities—Part I: AC/DC Interaction Phenomena; Part II: Planning Guidelines.)

The purpose of this document is to give guidance on the planning and design of dc links terminating at ac system locations having low short-circuit capacities relative to the dc power infeed. This guide is limited to the aspects of interactions between ac and dc systems that result from the fact that the ac system is "weak" compared to the power of the dc link (i.e., ac system appears as a high impedance at the ac/dc interface bus). Some more general aspects of the design and planning of high-voltage dc transmission schemes are described only when this adds to the understanding of the interaction phenomena and for the sake of completeness of the guide.

The content of this guide is put into practical perspective through reference to experience from existing systems. It explains how special ac/dc interaction problems, in a low or very low short-circuit ratio situation, were considered during system planning; what specific solutions were applied; and the subsequent operating experience.

This guide contains two parts:

— Part I, AC/DC Interaction Phenomena, classifies the strength of the ac/dc system, provides information about interactions between ac and dc systems, and provides guidance on design and performance.
— Part II, Planning Guidelines, considers the impact of ac/dc system interactions and their mitigation on economics and overall system performance and discusses the studies that need to be performed.

Part I is separated into the following clauses:

— Clause 1 contains general introductory and useful reference information.
— Clauses 2 and 3 discuss the strength of the ac/dc systems and their effects on voltage stability and power transfer limits.
— Clause 4 discusses HVDC controls and protection because they play an important role in most interaction phenomena.
— Clause 5 provides information about resonances, instabilities, and harmonic transfers.
— Clause 6 examines subsynchronous torsional interactions between dc convertors and nearby turbine generators.
— Clause 7 discusses the various types of ac system stabilities (i.e., transient, steady-state, low-frequency, and power-frequency stabilities).
— Clause 8 explains temporary overvoltages.
— Clause 9 examines rotational inertia of an ac system, which is an important aspect of the performance of an ac/dc link.
— Clause 10 describes the recovery of dc systems from ac and dc system faults.
— Annex A gives a brief description of the dc conversion process (i.e., basic rectifier and inverter operation).
— Annex B provides a bibliography pertaining to Part I. While it is not essential reference material for Part I of this guide, and while no claim is made that it is an exhaustive list, it is a useful resource of background information.

Part II is separated into the following clauses:

— Clause 1 contains general introductory and useful reference information.
— Clause 2 contains references.
— Clause 3 sets the stage for planning and design by identifying performance criteria and explains how these criteria can be defined and evaluated. This clause provides the basis for considering interaction and for evaluating the effectiveness of adopted strategies.

Copyright © 1997 IEEE. All rights reserved.

Copyright The Institute of Electrical and Electronics Engineers, Inc.
Provided by IHS under license with IEEE
No reproduction or networking permitted without license from IHS
Not for Resale

— Clause 4 discusses various aspects of system performance, in the context of low and very low short-circuit ratios, for the incorporation of the criteria developed in Clause 3. Alternative solutions to accommodate ac/dc interaction problems are presented.
— Clause 5 deals with aspects of economics and reliability.
— Clause 6 provides guidance on appropriate planning studies, once a dc link has been selected, with particular reference to low and very low SCR applications. After a review of appropriate study methods, both analog and digital, the stages of planning and design are suggested, and guidance is offered on which aspects to include.
— Clause 7 summarizes examples from the literature, in the context of planning studies for low SCR dc projects.
— Clause 8 describes selected projects that are in service with low and very low short-circuit ratios.
— Annex A provides a bibliography pertaining to Part II. While it is not essential reference material for Part II of this guide, and while no claim is made that it is an exhaustive list, it is a useful resource of background information.

This guide is the result of the work of the Joint Task Force (JTF) of the CIGRÉ Working Group 14.07—AC/DC System Interactions, and IEEE Working Group 15.05.05—Interaction with Low SCR AC Systems, which was set up in 1986 following the agreement between D. D. Wilson, Chairman of the IEEE Transmission and Distribution Committee, and T. E. Calverley, Chairman of the CIGRÉ Study Committee 14—DC Links.

At the time this guide was completed, the membership of the respective working groups were as follows:

IEEE Working Group 15.05.05:

**P. C. S. Krishnayya,** *Chair*

R. Adapa
G. Andersson
M. Baker
L. A. Bateman
L. Bergstrom
J. P. Bowles
G. D. Breuer
R. Bunch
D. G. Chapman
D. J. Christofersen
C. D. Clarke
P. Danfors
C. C. Diemond
J. J. Dougherty
A. Ekstrom
T. F. Garrity
A. Gavrilovic*
A. E. Hammad
R. E. Harrison
D. P. Hartmann
N. G. Hingorani
M. Holm
R. K. Johnson
G. W. Juette
G. G. Karady
W. O. Kramer
J. M. Ladden
C. M. Lane, Jr.
E. V. Larsen
R. H. Lasseter
R. L. Lee
T. H. Lee
M. A. Lebow
S. Lefebvre
J. Lemay
H. P. Lips
W. Litzenberger
W. F. Long†
D. J. Lorden
J. S. McConnach
M. F. McGranaghan
D. Melvold
A. J. Molnar
K. Mortensen
S. Nilsson
S. Nyati
H. S. Patel
C. Peixoto
K. J. Peterson
R. J. Piwko
D. Povh
F. S. Prabhakara
J. Reeve‡
J. Slapp
J. P. Stovall
M. Z. Tarnawecky
R. Thallum
C. V. Thio
D. R. Torgerson
J. J. Vithayathil
T. L. Weaver
D. A. Woodford
C. T. Wu

* Co-chair of JTF
† Technical Editor for Part I
‡ Technical Editor for Part II


Copyright © 1997 IEEE. All rights reserved.
Copyright The Institute of Electrical and Electronics Engineers, Inc.
Provided by IHS under license with IEEE
No reproduction or networking permitted without license from IHS
Not for Resale

CIGRÉ Working Group 14.07:

**A. Gavrilovic,** *Chair*

P. Adam
T. Adielson
J. D. Ainsworth
G. Andersson
J. P. Bowles
G. D. Breuer
P. H. Buxton
A. E. Hammad
B. Hansson
R. E. Harrison
R. Joetten
R. K. Johnson
Y. Kato
V. V. Khoudiakov
P. C. S. Krishnayya
R. H. Lasseter
J. Lemay
G. Liss
W. F. Long
J. McConnach
V. V. Mogirev
G. Moraw
F. Nozari
C. A. O. Peixoto
D. Povh
J. Reeve
M. Szechtman
H. L. Thanawala
C. Thio
P. L. Thomsen
T. L. Weaver
R. Yacamini

The following persons were on the balloting committee:

J. E. Applequist
J. J. Burke
V. L. Chartier
C. C. Diemond
I. S. Grant
J. G. Kappenman
G. G. Karady
C. P. Krishanyya
J. Lemay
W. F. Long
D. J. Melvold
F. D. Myers

When the IEEE Standards Board approved this guide on 26 June 1997, it had the following membership:

**Donald C. Loughry,** *Chair* **Richard J. Holleman,** *Vice Chair*
**Andrew G. Salem,** *Secretary*

Clyde R. Camp
Stephen L. Diamond
Harold E. Epstein
Donald C. Fleckenstein
Jay Forster*
Thomas F. Garrity
Donald N. Heirman
Jim Isaak
Ben C. Johnson
Lowell Johnson
Robert Kennelly
E. G. "Al" Kiener
Joseph L. Koepfinger*
Stephen R. Lambert
Lawrence V. McCall
L. Bruce McClung
Marco W. Migliaro
Louis-François Pau
Gerald H. Peterson
John W. Pope
Jose R. Ramos
Ronald H. Reimer
Ingo Rüsch
John S. Ryan
Chee Kiow Tan
Howard L. Wolfman

*Member Emeritus

Also included are the following nonvoting IEEE Standards Board liaisons:

Satish K. Aggarwal
Alan H. Cookson

Paula M. Kelty
*IEEE Standards Project Editor*

Copyright © 1997 IEEE. All rights reserved.

Copyright The Institute of Electrical and Electronics Engineers, Inc.
Provided by IHS under license with IEEE
No reproduction or networking permitted without license from IHS
Not for Resale

## Contents

## Part I: AC/DC Interaction Phenomena


1. Overview ..... 1

1.1 Scope ..... 1
1.2 Purpose ..... 1
1.3 General ..... 1
1.4 References ..... 3
1.5 Definitions ..... 3
1.6 Acronyms and abbreviations ..... 4

2. AC/DC system strength ..... 5

2.1 Introduction ..... 5
2.2 High-impedance systems ..... 5
2.3 Inadequate and zero mechanical inertia ..... 21
2.4 Numerical examples of CSCRs and $TOV_{fc}$ values ..... 23
2.5 Calculation of CSCRs ..... 24
2.6 Numerical examples of power reduction due to ac system impedance increase and ac voltage reduction ..... 27
2.7 AC/DC system strength—summary tables ..... 28

3. DC power transfer limits ..... 28

3.1 Description of phenomena ..... 28
3.2 Power limits of an inverter ..... 32
3.3 Power limits of a dc link ..... 36
3.4 Principal parameters ..... 40
3.5 Trends and sensitivities of system parameters ..... 40
3.6 Possible improvements ..... 41
3.7 Influence of dc controls ..... 43
3.8 Methods of study ..... 43
3.9 Discussion of power curves ..... 44

4. Control and protection for dc transmission ..... 46

4.1 Introduction ..... 46
4.2 Hierarchical division of the dc control system ..... 46
4.3 Types of interaction between controls and the ac system ..... 49
4.4 Current control ..... 51
4.5 Power control ..... 56
4.6 Reduction of the direct current at low voltage ..... 56
4.7 AC system instabilities ..... 57
4.8 Influence on the control of resonances in the ac network ..... 58
4.9 Summary of convertor control instability phenomena ..... 58
4.10 System parameters of principal interest to the controls ..... 59
4.11 AC voltage variations ..... 59
4.12 AC network frequency and stabilization control ..... 62
4.13 Control and protection considerations for back-to-back schemes ..... 67
4.14 Control and protection considerations for multiterminal schemes ..... 68
4.15 Higher-level controller characteristics for dc schemes in operation ..... 68




Copyright © 1997 IEEE. All rights reserved.
Copyright The Institute of Electrical and Electronics Engineers, Inc.
Provided by IHS under license with IEEE
No reproduction or networking permitted without license from IHS
Not for Resale

4.16 Protection ..... 72

5. Resonances, instabilities, and harmonic transfer ..... 73

5.1 Introduction ..... 73
5.2 Basic concepts ..... 73
5.3 Harmonic resonance-related instabilities and solutions ..... 75
5.4 Factors influencing harmonic problems ..... 79
5.5 Trends and sensitivities of system parameters ..... 79
5.6 Methods of study ..... 79
5.7 Different types of schemes and harmonic problems ..... 80
5.8 Comments ..... 81

6. Subsynchronous torsional interactions between dc convertors and nearby turbine-generators ..... 81

6.1 Introduction and summary ..... 81
6.2 Description of the phenomenon ..... 82
6.3 Principal parameters ..... 82
6.4 Trends and sensitivities of system parameters ..... 84
6.5 Influence of dc controls ..... 85
6.6 Methods of study ..... 87

7. Transient, steady-state, low-frequency, and power-frequency stabilities ..... 89

7.1 Introduction ..... 89
7.2 Descriptions of stability types ..... 89
7.3 Main parameters and effects ..... 90
7.4 Trends and sensitivities of system parameters ..... 91
7.5 AC and dc parallel operation ..... 92
7.6 Influence of dc control ..... 92
7.7 Methods and tools for study ..... 93
7.8 Different types of schemes ..... 94

8. Temporary overvoltages (TOVs) ..... 95

8.1 Description of phenomena ..... 95
8.2 Main parameters affecting the phenomena ..... 97
8.3 Trends and sensitivities of the system parameters ..... 97
8.4 Influence of dc control ..... 98
8.5 Methods and tools for study ..... 98
8.6 Measures for the limitation of TOVs ..... 101
8.7 Different types of schemes ..... 103

9. Zero- and low-inertia systems ..... 104

9.1 Introduction ..... 104
9.2 Zero-inertia systems—Island of Gotland ..... 105
9.3 Low-inertia system—Island of Corsica ..... 107

10. Recovery of dc systems from ac and dc system faults ..... 109

10.1 Introduction ..... 109
10.2 Parametric behavior of the phenomena ..... 110
10.3 Different types of schemes ..... 115

Copyright © 1997 IEEE. All rights reserved.

Copyright The Institute of Electrical and Electronics Engineers, Inc.
Provided by IHS under license with IEEE
No reproduction or networking permitted without license from IHS
Not for Resale

10.4 System experience and examples ..... 117
10.5 Methods and tools for studies ..... 121

Annex A (informative) The dc conversion process ..... 123

Annex B (informative) Bibliography ..... 135

## Part II: Planning Guidelines

1. Overview ..... 141

1.1 Scope ..... 141
1.2 Purpose ..... 141
1.3 General ..... 141

2. References ..... 142

3. Performance criteria and evaluation ..... 142

3.1 General considerations ..... 142
3.2 Power transfer limits and SCR ..... 143
3.3 Recovery from ac and dc faults ..... 145
3.4 Reactive compensation ..... 145
3.5 Temporary overvoltages (TOVs) ..... 146
3.6 Operation under low ac voltage conditions ..... 146
3.7 Power transfer during ac and dc faults ..... 147
3.8 Operation with and without ground return ..... 148
3.9 DC line re-energization ..... 148
3.10 Overload considerations ..... 148
3.11 Operation without communication ..... 149
3.12 Commutation failures ..... 149
3.13 Voltage changes during reactive switching ..... 149
3.14 Availability (adequacy and security) ..... 150
3.15 Economic and reliability criteria for comparison of different solutions to interaction problems ..... 150
3.16 Multiterminal considerations ..... 150

4. Planning considerations ..... 151

4.1 General aspects ..... 151
4.2 Power transfer limits ..... 152
4.3 Electromechanical stability ..... 157
4.4 Planning considerations of HVDC controls ..... 159
4.5 Planning of ac/dc performance enhancement ..... 163
4.6 Consideration of existing dc schemes in the same system ..... 164

5. System economics and reliability ..... 164

5.1 General considerations ..... 164
5.2 Aspects of alternative solutions to solve ac/dc interaction problems ..... 165
5.3 Reliability and economic aspects of different dc system configurations ..... 167
5.4 Study methods, sources of data, and assumptions ..... 168

6. Planning and initial design studies ..... 170



Copyright © 1997 IEEE. All rights reserved.
Copyright The Institute of Electrical and Electronics Engineers, Inc.
Provided by IHS under license with IEEE
No reproduction or networking permitted without license from IHS
Not for Resale

6.1 Introduction ..... 170
6.2 Planning studies ..... 170
6.3 Initial design studies ..... 173
6.4 Required system data ..... 179

7. Examples of system studies ..... 181

7.1 Introduction ..... 181
7.2 Itaipu transmission system ..... 181
7.3 Chateauguay ..... 182
7.4 Highgate ..... 182
7.5 Gotland ..... 183
7.6 Virginia Smith (formerly Sidney) ..... 183
7.7 MTDC system studies ..... 183
7.8 Reliability studies ..... 184
7.9 Additional references ..... 184

8. Examples of existing low and very low SCR systems ..... 184

8.1 Introduction ..... 184
8.2 Miles City converter station ..... 186
8.3 Virginia Smith (formerly Sidney) ..... 188
8.4 Highgate ..... 190
8.5 Chateauguay ..... 191
8.6 Blackwater ..... 191
8.7 Cross Channel ..... 192
8.8 Vindhyachal ..... 193
8.9 Gotland ..... 194
8.10 Comerford ..... 195
8.11 Nelson River ..... 196
8.12Itaipu ..... 197
8.13 McNeill ..... 198

Annex A (informative) Bibliography ..... 201

Copyright © 1997 IEEE. All rights reserved.

Copyright The Institute of Electrical and Electronics Engineers, Inc.
Provided by IHS under license with IEEE
No reproduction or networking permitted without license from IHS
Not for Resale

--`,,`,,`-`-`,,`,,`,`,,`---

Copyright The Institute of Electrical and Electronics Engineers, Inc.
Provided by IHS under license with IEEE
No reproduction or networking permitted without license from IHS

Not for Resale

# IEEE Guide for Planning DC Links Terminating at AC Locations Having Low Short-Circuit Capacities Part I: AC/DC Interaction Phenomena

## 1. Overview

### 1.1 Scope

Part I of the guide discusses the effects of various aspects of the ac/dc interactions on the design and performance of dc schemes where the ac system appears as a high impedance at the ac/dc interface bus; i.e., low and very low short-circuit (short-circuit ratio [SCR]) conditions. AC systems having zero or inadequate mechanical rotational inertia, such as island schemes with no or with limited local generation, are also considered. Environmental, siting, and construction issues are not addressed. General issues, such as steady-state reactive compensation and ac and dc filter requirements, are not in the scope of this guide, but would be included in a complete study for a particular dc scheme design. In order to assist those not familiar with dc transmission and convertors, a brief description of basic rectifier and inverter operation is given in Annex A of Part I.

Part II of this guide, which is bound together with Part I, considers how the ac/dc interaction phenomena described in Part I should be taken into account in the planning and the preliminary design of ac/dc systems having low or very low SCR values.

### 1.2 Purpose

The purpose of Part I of this guide is to address factors required to be considered in the design of dc transmission schemes in the context of system interactions resulting from dc links terminating at ac system locations having low short-circuit capacities relative to dc power infeed and for cases where the inertia of the ac system is too low for satisfactory operation. The following ac/dc interactions are considered: power, voltage, and frequency instabilities; harmonic resonance-related instabilities; subsynchronous torsional interactions; temporary overvoltages; and recoveries from ac and dc faults.

### 1.3 General

The introduction of thyristor valves based on large-size thyristors, over the last twenty years, has contributed to the improvement of overall high-voltage, direct-current (HVDC) economy and reliability, making the application of HVDC transmission more widespread.

From earliest commercial applications of HVDC, planners found, in a number of schemes, that the ac system at the point of the proposed dc power infeed was "weak"—that is, its impedance relative to the dc power was high, and in some cases, the inertia of the ac system was low.

Copyright © 1997 IEEE. All rights reserved.

Copyright The Institute of Electrical and Electronics Engineers, Inc.
Provided by IHS under license with IEEE
No reproduction or networking permitted without license from IHS
Not for Resale

One of the important criteria in the design of dc links is the value of the permissible temporary overvoltage (TOV) at ac terminals of the convertor stations. In early schemes, the problem of too-high TOV was solved by the addition of synchronous compensators in the inverter stations; i.e., by the reduction of the ac system impedance as seen by the HVDC convertor. The application of metal-oxide (MO) arrestors has been made in some recent schemes to control TOV without the need for synchronous compensators. However, for a given dc power, this resulted in the need to accept an ac system having higher impedance compared to previous schemes, and several aspects of interactions between ac and dc systems became more evident.

The "weaker the ac system"—that is, the lower the ratio of the ac system short-circuit capacity to dc link power—the greater will be the ac/dc interactions. The ac/dc system strength, from the impedance point of view, is defined in this guide. Based on that definition and on typical inverter characteristics (such as the value of the convertor transformer reactance) the following SCR values can be used to classify an ac/dc system:

a) A high SCR ac/dc system is categorized by an SCR value greater than 3.
b) A low SCR ac/dc system is categorized by an SCR value between 2 and 3.
c) A very low SCR ac/dc system is categorized by an SCR value lower than 2.

It should be emphasized that a scheme may be operating with high SCR for most of the time, but that it may appear as a low or very low SCR scheme during an emergency; that is, at ac system outage conditions. In such cases, the scheme must be designed to operate for those conditions, unless dc power reduction is acceptable.

Operation with very low SCR systems is possible only if very fast and continuous control of ac voltage is exercised, because the inverter operation is in the "unstable" region of the ac voltage/dc power characteristic. In modern ac system terms, this mode of operation is similar to an ac system whose voltage stability is maintained by a fast static var compensator (SVC). In such dc links presently in service, the required fast voltage control is executed by the HVDC convertor itself.

From the above, it can be seen that problems associated with very low SCR ac systems can be resolved either by strengthening the system with the addition of synchronous compensators or by stabilizing the ac system voltage with very fast control. On the other hand, synchronous compensators must be used to strengthen the system whenever there is a requirement to increase the inertia of the ac system. The system inertia constant referred to dc power, $H_{DC}$, should, for example, be greater than 2 s in order to maintain frequency deviation under fault conditions at less than 5%.

In addition to the system strength classification mentioned above, Part I of this guide defines and discusses a number of ac/dc interaction phenomena and proposes methods of preventing associated potential problems.

Good preliminary judgement on the impact of most interactions on the design and performance of a dc transmission scheme can be based on the SCR and inertia values quoted above, and on the discussions given in this document. However, this guide stresses the need to carry out adequate studies at all stages of planning and design.

HVDC controls play an important role in most interaction phenomena, and for that reason a detailed description of controls is included in this guide.

AC/DC system interactions are concerned with voltage stability (voltage collapse phenomena), overvoltages, resonances, and recovery from disturbances. Examples of their influence on the station design are the following:

— Voltage stability conditions will determine the type of voltage control and the type of reactive power supply. The voltage stability–voltage collapse interaction is similar to such phenomena in a purely ac system.


Copyright © 1997 IEEE. All rights reserved.
Copyright The Institute of Electrical and Electronics Engineers, Inc.
Provided by IHS under license with IEEE
No reproduction or networking permitted without license from IHS
Not for Resale

— The level of TOV will influence station design, including thyristor valve and surge arrester ratings. The lower the value of SCR, the higher the potential value of TOV.
— Shunt capacitors are used in convertor stations for ac filters and for var supply. The larger the ratio of shunt capacitor Mvar to ac system short-circuit MVA, the lower will be the resonant frequency.

Commutation failures and recovery from ac and dc faults represent an important aspect of dc operation. However, it should be noted that modern controls have a dominating influence on the recovery from faults and are less affected by ac system impedance compared to controls used in earlier schemes.

## 1.4 References

This standard shall be used in conjunction with the following publications. When the following standards are superseded by an approved revision, the revision shall apply:

IEC 60919-1 (1988-12), Performance of high-voltage d.c. (HVDC) systems—Part 1: Steady-state conditions.[1]

IEC 60919-2 (1990-10), Performance of high-voltage d.c. (HVDC) systems—Part 2: Faults and switching. (Equivalent to IEEE P1030.2/D4, Dec. 1990.[2])

IEC 60919-3...[3], Performance of high-voltage d.c. (HVDC) systems—Part 3: Dynamic conditions.

## 1.5 Definitions

**1.5.1 critical short-circuit ratio (CSCR):** The SCR corresponding to the operation at maximum available power (MAP); for typical inverter design, CSCR = 2.

NOTE— The following operational characteristics are associated with CSCR:
— CSCR represents the borderline between "stable" and "unstable" operating regions. For SCR values lower than CSCR, the operation is in the "unstable" region of the ac voltage/dc power characteristic.
— If the operation is at unity power factor for systems at CSCR (i.e., the operation is at MAP), then the fundamental component of the temporary overvoltage ($TOV_{fc}$) at full load rejection would be near to $\sqrt{2}$.
— A resonance near the second harmonic will occur for systems operating at CSCR.

**1.5.2 effective dc inertia constant ($H_{dc}$):** The rotational ac system inertia constant $H$ converted to the base of dc power.

**1.5.3 high-impedance ac system:** An ac/dc system having low or very low SCR. (In this guide, rated values are assumed to be equal to nominal.)

**1.5.4 inadequate inertia systems:** An ac system having limited local generation, and therefore rotational inertia, so that the required voltage and frequency cannot be adequately maintained during transient ac or dc faults.

---

[1]IEC publications are available from IEC Sales Department, Case Postale 131, 3, rue de Varembé, CH-1211, Genève 20, Switzerland/Suisse. IEC publications are also available in the United States from the Sales Department, American National Standards Institute, 11 West 42nd Street, 13th Floor, New York, NY 10036, USA.

[2]Numbers preceded by P are IEEE authorized standards projects that were not approved by the IEEE Standards Board at the time this publication went to press. For information about obtaining drafts, contact the IEEE.

[3]This IEC standard was not published at the time this publication went to press. Publication is expected in Spring 1998. For information about obtaining a draft, contact the IEC.

Copyright © 1997 IEEE. All rights reserved.

Copyright The Institute of Electrical and Electronics Engineers, Inc.
Provided by IHS under license with IEEE
No reproduction or networking permitted without license from IHS
Not for Resale

**1.5.5 maximum available power (MAP):** The maximum power that can be obtained by increasing dc current while not controlling the ac voltage.

**1.5.6 operation with minimum constant γ:** Operation of an inverter at minimum commutation margin angle γ in order to ensure transmission at the maximum dc voltage (possible only at powers below MAP; i.e., in the "stable" region of the ac voltage/dc power characteristic).

**1.5.7 operation with variable γ:** Margin angle γ is varied around an average value in order to stabilize the ac voltage. This can be achieved either by direct control of the ac voltage or by indirectly controlling the dc voltage. Another way of stabilizing the receiving system ac voltage is to arrange for the inverter, and not the rectifier, to be the current-controlling station. These modes of control are normally used for operation beyond MAP; that is, in the "unstable" region of the ac voltage/dc power characteristic.

**1.5.8 short-circuit ratio (SCR):** The ratio of the ac system three-phase short-circuit MVA (expressing the ac system impedance) to dc power.

**1.5.9 weak ac system:** *See:* **high-impedance ac system.**

**1.5.10 zero inertia system:** An isolated ac system having no local generation.

## 1.6 Acronyms and abbreviations

| | |
|---|---|
| ac | alternating current |
| AVR | automatic voltage regulator |
| C | capacitor |
| CCA | current control amplifier |
| CESCR | critical effective short-circuit ratio |
| CQESCR | critical *Q* (reactive) effective short-circuit ratio |
| CSCR | critical short-circuit ratio |
| dc | direct current |
| emf | electromotive force |
| EMTP | electromagnetic transients program |
| EPRI | Electric Power Research Institute |
| ESCR | effective short-circuit ratio |
| FSPC | frequency-sensitive power controller |
| GTO | gate turn-off thyristor |
| LVCL | low-voltage current limit |
| MAP | maximum available power |
| MO | metal-oxide |
| MPC | maximum power curve |
| MTDC | multi-terminal direct current |
| OLTC | on load tap-changes |
| OSCR | operating short-circuit ratio |
| PMC | pole master control |
| QESCR | *Q* (reactive) effective short-circuit ratio |
| RAS | remedial action scheme |
| SC | synchronous compensator |
| SCR | short-circuit ratio |
| SR | saturated reactor |
| SSDC | supplementary subsynchronous damping control |
| SSO | subsynchronous oscillation |
| SVC | static var compensator |
| TCR | thyristor-controlled reactor |


Copyright © 1997 IEEE. All rights reserved.
Copyright The Institute of Electrical and Electronics Engineers, Inc.
Provided by IHS under license with IEEE
No reproduction or networking permitted without license from IHS
Not for Resale

| | |
|---|---|
| TCU | thyristor control unit |
| TOV | temporary overvoltage |
| TSC | thyristor-switched capacitor |
| UIF | unit interactional factor |
| VCO | voltage-controlled oscillator |
| VDCOL | voltage-dependent current order limit |
| VSF | voltage stability factor |

# 2. AC/DC system strength

## 2.1 Introduction

Alternating-current system disturbances can affect the operation of any convertor, but mal-operation of a small convertor should have negligible effect on the ac system. However, it is not uncommon for a dc link to supply a large proportion of the ac system load so that the loss of its real power and the associated reactive power changes can have a profound effect on the system.

The interaction between ac and dc systems becomes more pronounced as the impedance of the ac system, as seen from the convertor ac terminals, is increased for a particular dc power. It follows that even a relatively small dc link connected to a point of the ac system having high impedance (low short-circuit capacity) may have considerable effect on the local ac network, even if the latter may be part of a large ac system.

It is important that an adequate system electromotive force (emf) is available not only for normal operation, but also following a system fault. The rotational mechanical inertia of the ac system transiently provides the energy to maintain the system emf despite a temporary reduction in the supply of dc power through the inverter. The ac system generators and their turbines are the main source of the ac system rotational inertia.

If a system receives all or most of its power from a dc link, the inertia of the receiving system may be inadequate, so that upon the interruption of the dc infeed, due to any cause, the system emf and frequency may decrease to unacceptably low values. In such cases synchronous compensators are used to act as “transient generators” to maintain the system emf and frequency.

An ac system can be defined as “weak” from two aspects:

a) Alternating-current system impedance may be high relative to dc power at the point of connection.
b) Alternating-current system mechanical inertia may be inadequate relative to the dc power infeed.

## 2.2 High-impedance systems

### 2.2.1 Short-circuit ratios (SCRs)

#### 2.2.1.1 Calculating SCRs

The calculation of SCRs is discussed in 2.2.5, which shows that it is really per unit (pu) admittance. However, for most practical cases this is not very different from that of pure inductance, and the SCR is then often obtained from the following equation:

$$\mathrm{SCR} = \frac{S}{P_{d1}} \tag{1}$$

Copyright © 1997 IEEE. All rights reserved.

Copyright The Institute of Electrical and Electronics Engineers, Inc.
Provided by IHS under license with IEEE
No reproduction or networking permitted without license from IHS
Not for Resale

where $S$ is the ac system three-phase symmetrical short-circuit level in megavolt-amperes (MVA) at the convertor terminal ac bus with 1.0 pu ac terminal voltage, and $P_{d1}$ is the rated (considered in this guide to be equal to the nominal) dc terminal power in megawatts (MW).

When considering the effects of short-circuit currents on equipment, only the maximum value needs to be calculated. In contrast, it is the minimum value of $S$ at which the rated power $P_{d1}$ will be transmitted that must be used when examining limiting operating conditions.

#### 2.2.1.2 Effective short-circuit ratio (ESCR)

Shunt capacitors including ac filters connected at the ac terminal of a dc link can significantly increase the effective ac system impedance. To allow for this, the effective short-circuit ratio (ESCR) is defined as follows:

$$\text{ESCR} = \frac{S - Q_c}{P_{d1}} \tag{2}$$

where $Q_c$ is the value of three-phase fundamental Mvar in per unit of $P_{d1}$ at per unit ac voltage of shunt capacitors connected to the convertor ac bars (ac filters and plain shunt banks).

#### 2.2.1.3 Operating short-circuit ratio (OSCR)

The ratio $S/P_{d1}$ will vary in practice due to changes in ac system configuration and due to different levels of dc power being transmitted. Therefore, it should be remembered that it is the operating short-circuit ratio (OSCR) that is important, and that refers to actual power and corresponding actual $S$. Normally, the OSCR will be higher than the minimum specified SCR of the scheme, particularly at transmission below rated power. However, the lowest value of OSCR may not necessarily coincide with rated power. For example, operation at a lower power level may coincide with a system arrangement having higher impedance value than the one specified for the rated value. It should be borne in mind that, at very low currents, satisfactory operation may be achieved only at a value of OSCR that has a higher value than the minimum SCR specified for operation at normal dc currents.

#### 2.2.1.4 Effect of convertor reactive power consumption and QESCR

SCRs are sometimes used as a measure of expected performance of ac/dc systems, but as discussed later, this can give only an approximate indication, and comparisons between systems made by referring only to their respective short-circuit ratios can be misleading.

One of the major reasons for different performance of dc systems having the same SCR or ESCR is the convertor reactive consumption, which may differ considerably between the schemes under consideration. The reactive consumption of the convertor ($Q_d$) (see Annex A of Part I) can vary greatly depending on the operating $\alpha$ or $\gamma$ and on the value of the commutating reactance (usually the convertor transformer leakage reactance). The value of $Q_d$ can have a significant effect on performance, in particular on power transfer limits and on temporary overvoltages. If the system short-circuit MVA and $Q_c$ are referred to the sum of $P_d$ and $Q_d$ rather than to $P_d$, a better, but still approximate indication of performance can be obtained as can be seen from examples given in 2.4.

The $Q$ effective short-circuit ratio (QESCR) is defined as follows:

$$\text{QESCR} = \frac{S - Q_c}{P_d - Q_d} \tag{3}$$


Copyright © 1997 IEEE. All rights reserved.
Copyright The Institute of Electrical and Electronics Engineers, Inc.
Provided by IHS under license with IEEE
No reproduction or networking permitted without license from IHS
Not for Resale

#### 2.2.1.5 Synchronous compensators (SCs) and static var compensators (SVCs)

Synchronous compensators (SCs) contribute directly to the reduction of the ac system impedance, and they are included in the calculation of short-circuit ratios. SCs have been used to strengthen the ac system at the terminals of an inverter, this being a more economic solution compared to, for example, addition of a transmission line.

Operation of a dc link terminating at a point of high ac system impedance (i.e., of low short-circuit capacity) can be enhanced by fast control of ac voltage. This can be done by using the convertors themselves to control the voltage or by employing a separate thyristor-controlled reactor (TCR) or a saturated reactor (SR) at the ac terminals of the inverter. Fast control of the ac voltage does, in effect, "strengthen" the ac system.

If the ac system has a very high impedance, relative to the power being transmitted (a very low SCR system; see 2.2.4.3), satisfactory operation can be achieved in two ways:

a) By strengthening the ac system by, for example, addition of a synchronous compensator—and in so doing, transforming the system to a low SCR system (see 2.2.4.2)
b) By applying very fast ac voltage control (see 2.2.7)

It is possible to express, approximately, the strengthening of the ac system by fast voltage control in terms of a reduction of the ac system impedance (see 2.2.7.1). However, it is recommended to ignore this effect when calculating the short-circuit ratios. The ac voltage control and the dc power controls must be coordinated for each scheme; also, the convertor or TCR or SR are designed, due to economic considerations, to execute the voltage control within a predetermined ac voltage range. Later in this document it is emphasized that short-circuit ratios describe the system only approximately and that operation with very low SCR assumes fast voltage control.

A static var compensator (SVC) normally consists of an element (TCR, SR) that provides continuously variable vars and one or more of the following elements:

— Fixed shunt filters, capacitors, or reactors
— Thyristor switched shunt capacitors
— Mechanically switched shunt capacitors
— Thyristor switched shunt reactors
— Mechanically switched shunt reactors

TCR and SR are excluded, as already stated, from the definition of short-circuit ratios, as their effects depend on their designed range, speed of response, and coordination with other controls. The other elements, fixed or mechanically switched, would have to be included for calculating ESCR, because their presence adds directly to the ac system impedance.

Shunt reactors are usually disconnected for normal operating conditions, but would have to be considered if normally connected.

### 2.2.2 Power-current characteristics

#### 2.2.2.1 Maximum power curve (MPC)

For a given ac system impedance and other parameters of the ac/dc system shown in Figure 2-1, there will be a unique $P_d/I_d$ characteristic, shown in Figure 2-2, provided the starting conditions are defined. Additionally, it is assumed that $I_d$ changes almost instantaneously in response to the change of $\alpha$ of the rectifier; for example, due to a change in current order. All other quantities—ac system emf, $\gamma$ (minimum) of the inverter, tap-changers, automatic voltage regulation (AVR), and the value of shunt capacitors and reactors—are assumed not to have changed. When considering the inverter power capability, it is also assumed that the rectifier provides no

Copyright © 1997 IEEE. All rights reserved.

Copyright The Institute of Electrical and Electronics Engineers, Inc.
Provided by IHS under license with IEEE
No reproduction or networking permitted without license from IHS
Not for Resale

limitation to the supply of dc current at rated dc voltage. Each subsequent point is calculated by steady-state equations. These "quasi-steady-state" characteristics give a good indication of dynamic performance.

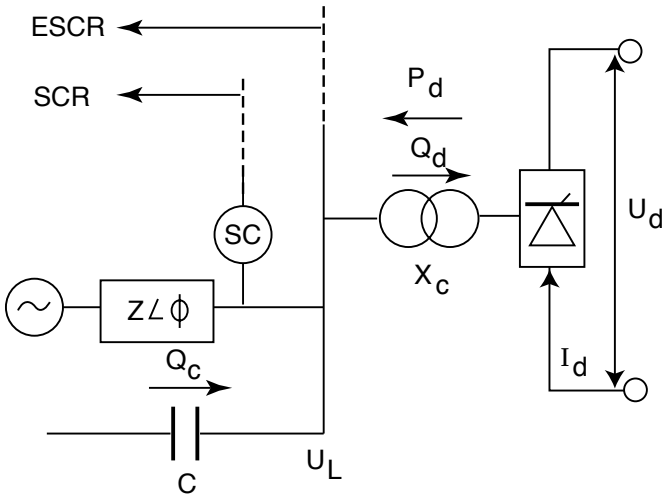


**Figure 2-1—Simplified representation of a dc link feeding an ac system with shunt capacitors (Cs) and synchronous compensators (SCs) (if any) at convertor station busbars**

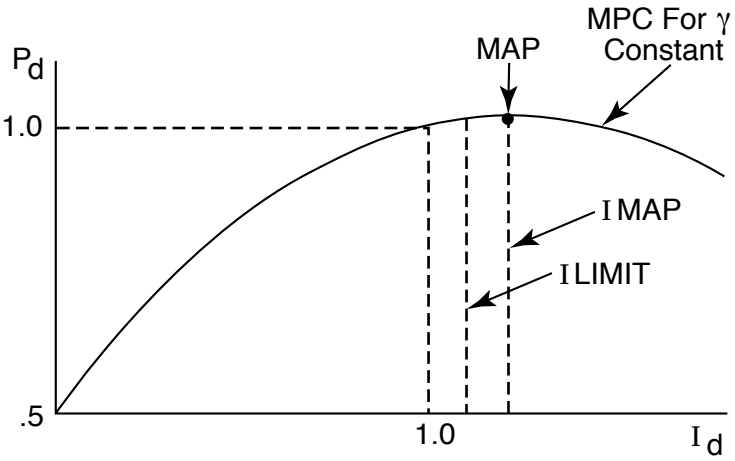


**Figure 2-2—DC power—dc current curve for γ minimum**

The starting conditions are defined to be as follows:

$P_d$ = 1.0 pu, $U_d$ = 1.0 pu, $U_L$ = 1.0 pu, and $I_d$ = 1.0 pu.

($P_d$ = dc power; $U_L$ = ac terminal—i.e., convertor transformer line-side voltage; $U_d$ = dc voltage of the inverter; and $I_d$ = dc current.)

If the inverter is operated throughout at minimum constant γ, the resulting characteristics will represent maximum obtainable power for the system parameters being considered. This curve is termed the maximum power curve (MPC). Any power can be obtained below MPC by increasing α and γ, but power higher than


Copyright © 1997 IEEE. All rights reserved.
Copyright The Institute of Electrical and Electronics Engineers, Inc.
Provided by IHS under license with IEEE
No reproduction or networking permitted without license from IHS
Not for Resale

MPC can be obtained only if one or more system parameters are changed—e.g., by reduced system impedance, increased system emf, larger capacitor banks, etc.

A similar MPC curve can be obtained for the rectifier at minimum constant α.

#### 2.2.2.2 Maximum available power (MAP)

An MPC exhibits a maximum value, termed maximum available power (MAP) as can be seen in Figure 2-2. The increase of the current beyond MAP reduces the dc voltage to a greater extent than the corresponding dc current increase. This could be counteracted by changing the ac system conditions—e.g., by controlling the ac terminal voltage. It should be noted that $dP_d/dI_d$ is positive for operation at dc currents smaller than $I_{MAP}$, the current corresponding to MAP; $dP_d/dI_d$ is negative at dc currents larger than $I_{MAP}$.

### 2.2.3 Critical short-circuit ratios (CSCRs)

Maximum power curves are plotted in Figure 2-3 for an inverter connected to ac systems having four different strengths. It can be seen that the rated (nominal) operating point A is located at different parts of MPC for different values of SCR.

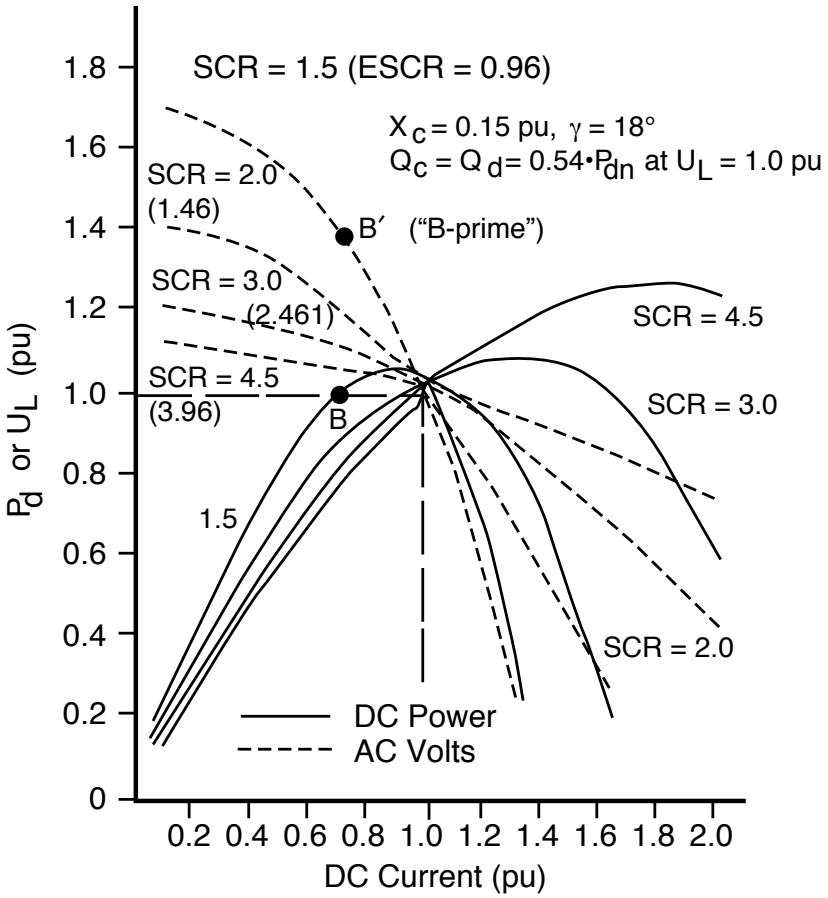


**Figure 2-3—Variation of inverter ac terminal voltage**

For SCR = 4.5, the operating point A is well below MAP and the one per unit current is considerably smaller than $I_{MAP}$ = 1.8 pu. For SCR = 3, A is nearer to MAP and $I_{MAP}$ is 1.4 pu. In both of these cases, $dP_d/dI_d$ is positive.

Copyright © 1997 IEEE. All rights reserved.

Copyright The Institute of Electrical and Electronics Engineers, Inc.
Provided by IHS under license with IEEE
No reproduction or networking permitted without license from IHS
Not for Resale

For SCR = 1.5, the operating point A is "beyond" MAP, corresponding to $I_{MAP}$ = 0.8 pu of rated dc current, $I_{dN}$. The value of $dP_d/dI_d$ is negative. It may appear that there is another possible operating point for SCR = 1.5 at the left of MAP, point B. However, inspection of Figure 2-3 will indicate that the voltage corresponding to point B for SCR = 1.5 is too high to be utilized, as indicated by point B.

When the rated values of $P_d$, $I_d$, $U_d$, and $U_L$ (all at 1.0 pu) correspond to the maximum point of $P_d/I_d$ curve for operation with minimum γ, then the corresponding SCRs are termed critical ratios (critical SCR [CSCR], critical effective SCR [CESCR], and critical $Q$ effective SCR [CQESCR]).

In this example, CSCR = 2, and the operating point A coincides with the MAP of the curve for SCR = 2. However, as discussed in 2.4, the value of CSCR depends on the inverter reactive consumption; i.e., on the values of the commutating reactance $X_c$ and on the commutation margin γ.

For calculation of critical short-circuit ratios, see 2.5.

It is clear that the critical short-circuit ratios represent a borderline, when operating at γ constant, as the ratio $dP_d/dI_d$ changes its sign. This is further discussed in Clause 3.

### 2.2.4 Short-circuit ratios as indication of ac/dc system strength

Three typical cases can be distiguished by considering the transient conditions that would temporarily reduce the ac terminal voltage and/or increase the system impedance; e.g., due to the loss of an ac line. In such a case, the power for a given current would be reduced; i.e., the temporary system condition would result in a new power curve that has a lower maximum value.

#### 2.2.4.1 High SCR system

Figure 2-4 shows an inverter connected to a system by two parallel ac lines. It is assumed that the original SCR of 4.5 is temporarily reduced to an SCR of 3 if one of the two lines has tripped.

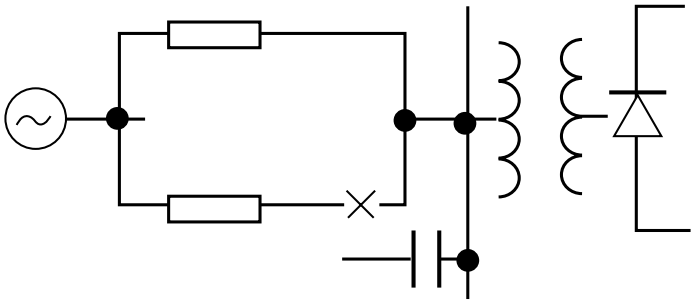

**Figure 2-4—An inverter connected to a system by two parallel ac lines**

In this case, power can be maintained at one per unit value despite the reduction of MAP, as shown in Figure 2-5 by increasing dc current at the new operating point, B. Operation throughout is at dc currents having a lower value than the current corresponding to MAP ($I_d < I_{MAP}$). The assumed system disturbances have resulted in a reduction of MPC, but the new maximum, MAP-2, is still higher than the rated power. All operating conditions are at γ minimum constant and correspond to SCR > CSCR.

(It should be noted that a sufficiently severe system disturbance could always cause an excursion beyond MAP, but such rare events are not considered as part of the definition of system strength.)


Copyright © 1997 IEEE. All rights reserved.
Copyright The Institute of Electrical and Electronics Engineers, Inc.
Provided by IHS under license with IEEE
No reproduction or networking permitted without license from IHS
Not for Resale

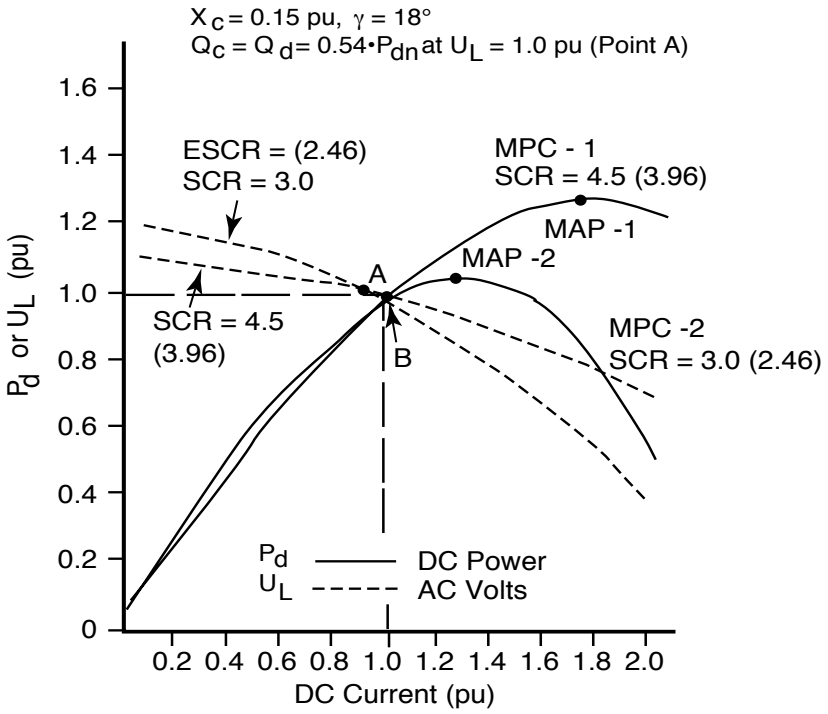


**Figure 2-5—AC/DC system—high SCR, sudden change of SCR from 4.5 to 3.0**

### 2.2.4.2 Low SCR system

The normal operation is at $I_d < I_{MAP}$ but a system disturbance could reduce MAP below the rated power and operation would continue at a reduced power in current control at $I_d$, which may be greater than $I_{MAP,}$ or in power control at a reduced power order. Normal operating conditions are at SCR > CSCR for operation at minimum γ, but temporary operation may be at SCR < CSCR at a power level lower than rated.

Power curves for this case are shown in Figure 2-6a. It has been assumed that an SCR of three reduces to a value of two, as a consequence of the tripping of one line (Figure 2-4). The power at MAP-2 of the reduced MPC-2 is lower than the rated power at A. Any increase of current beyond 1.0 would be counter-productive, as the power would further reduce. It should be noted that the system impedance for curves SCR = 2 of Figures 2-3 and 2-6a are identical, but MAP-2 of Figure 2-6a has a lower value than MAP for SCR = 2 of Figure 2-3. The reason for this is that the initial ac terminal voltage, $U_L$, for all values of SCRs of Figure 2-3 was adjusted at one per unit. In the case of Figure 2-6a, $U_L$ was adjusted to one per unit for initial conditions at SCR = 3. After the line tripping ac terminal voltage was decreased, due to an increase of the system impedance, to a value of 0.93 pu of $U_{LN}$ and power decreased to 0.92 pu of $P_{dN}$ at 1.0 pu of $I_d$. These values represent the initial conditions for MPC-2.

### 2.2.4.3 Very low SCR system

Normal operation is at a direct current equal to or larger than the current corresponding to MAP ( $I_d > I_{MAP}$). Normal operating conditions are at SCR ≤ CSCR as indicated by point A on a curve for SCR = 1.5 in Figure 2.3. In such cases, a stable condition in power control is achieved by operation with variable γ. The variable γ is normally kept at a value higher than the minimum, so that the inverter itself can control the voltage. An alternative way of operating at SCR < CSCR can be achieved by the use of very fast static var compensators to control the ac voltage, and hence the dc voltage.

The operation with very low SCR systems is discussed in Clauses 3 and 4.

Copyright © 1997 IEEE. All rights reserved.

Copyright The Institute of Electrical and Electronics Engineers, Inc.
Provided by IHS under license with IEEE
No reproduction or networking permitted without license from IHS
Not for Resale

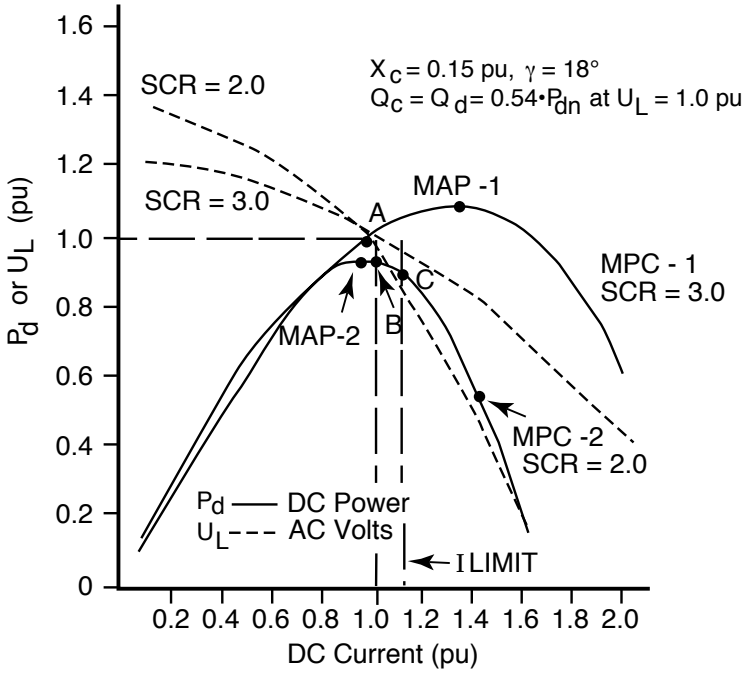


**Figure 2-6a—AC/DC system—low SCR power and ac voltage curves, sudden change of SCR from 3.0 to 2.0**

### 2.2.4.4 Typical values of SCR

In the initial stages of planning, the utility may know only the short-circuit MVA of the system and the required dc MW. The following are very approximate indications of the ac/dc system strength in terms of SCR.

For a high SCR system (approximately SCR > 3.0) as defined in 2.2.4.1, dc could normally be introduced without the need for any special steps. However, as can be seen from the ac voltage curves of Figure 2-3, the TOV—the value of $U_L$ at load rejection ($I_d$ = 0)—is becoming relatively high as SCR reduces and approaches the value of three, and ac voltage control has been used for some schemes having SCR in that region (Cross Channel, Chateauguay).

The application of HVDC with a low SCR system as defined in 2.2.4.2 (approximately 3 > SCR > 2) may need some additional control features (see Clauses 3 and 4). In addition, consideration should be given to ac voltage control and to the possibility of second/third harmonic resonance. These considerations may result in the need for some additional steps to be taken.

If SCR is lower than two, the system may prove to be a very low SCR system as defined in 2.2.4.3, and the use of "variable γ control strategy" (see Clauses 3 and 4) may prove to be essential. Operation at constant γ could be possible, provided very fast ac voltage control is used. Special steps would be needed to control ac overvoltages and low-order harmonics.

When comparing the performance of a dc link based on the values of SCR, it should be appreciated that the value of CSCR, unlike SCR, depends on the value of $Q_d$, which in turn depends on the commutating reactance, $X_c$, and the value of γ. Two inverters rated for the same nominal power, but having different nominal $Q_d$, will have the same SCR, but the values of CSCRs will be different. It can be seen in 2.4 that, for some typical examples, CSCR may vary by more than 30%. In the examples considered in previous subclauses, $X_c$ = 15% and γ = 18° have been assumed, which may be considered to be in the middle of the range of practical values.


Copyright © 1997 IEEE. All rights reserved.
Copyright The Institute of Electrical and Electronics Engineers, Inc.
Provided by IHS under license with IEEE
No reproduction or networking permitted without license from IHS
Not for Resale

One system may have requirements that necessitate deeper study than another system. System damping, which in the simple model is represented by the impedance angle, may differ greatly between two systems having the same value of SCR. This can be important for some interaction phenomena. All meaningful studies should use the available system data in sufficient detail to match the requirements of a particular study. However, it should be noted that the trends in convertor control design are making stability and recovery from faults less influenced by system damping. Hence, in the future, the damping will principally affect the steady-state harmonics and overvoltages due to major disturbances, such as total load rejection.

#### 2.2.4.5 The nature of ac system disturbance

The definitions of the system strength given in 2.2.4 depend also on the operating conditions of a given system. For example, the disturbance described in 2.2.4.2 may be considered, by some utilities, to be an exceptional event, and more "normal," relatively frequent disturbances may not result in the reduction of maximum available power (MAP-2) below the rated power.

The utilities usually specify the disturbance for which the power should be maintained at the rated value in terms of the ac terminal voltage reduction, without specifying any associated change of the system impedance; i.e., as if the terminal voltage was reduced only by ac system emf reduction.

The effect on dc power will be different for the same amount of ac terminal voltage reduction, depending on whether the ac system impedance has changed or not.

In Figure 2-6b, MPC-1 and MPC-2 are the same as in Figure 2-6a: MPC-2 resulted from the ac system impedance increase by one-third, from SCR = 3 to SCR = 2; this resulted in an ac terminal voltage drop from 1.0 pu (point A) to 0.93 pu (point B) at $I_d$ = one per unit; the power has reduced from one per unit to 0.92 pu, which is very close to the value of MAP-2.

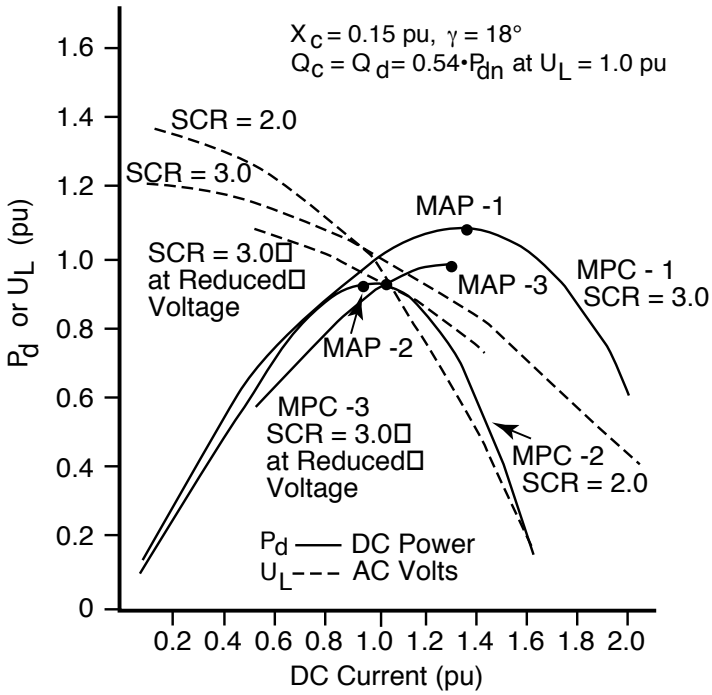


**Figure 2-6b—AC/DC system—low SCR, sudden ac voltage reduction without SCR change (MAP-3)**

--`,,`-`-`,,`,,`,`,,`---

Copyright © 1997 IEEE. All rights reserved.

Copyright The Institute of Electrical and Electronics Engineers, Inc.
Provided by IHS under license with IEEE
No reproduction or networking permitted without license from IHS
Not for Resale

MPC-3 was obtained by assuming that ac terminal voltage has reduced to 0.93 pu without a change of the system impedance. Direct-current power has reduced initially to a similar value as for MPC-2, but because MAP-3 has a greater value than MAP-2, the power can be increased to 0.98 pu (MAP-3) by increasing dc current to 1.25 pu.

This means that the power immediately available following the disturbances will differ by 6.5% for the two cases.

Relevant quantities for these two cases are tabulated in 2.6.

#### 2.2.4.6 Temporary overvoltages (TOVs)

When considering power transfer limits, MAP represents a clear change in the $P_d/I_d$ characteristic. Moreover, for operation at currents higher that $I_{MAP}$, the control strategy based on constant γ operation cannot be used in power control mode.

When considering the values of TOVs, there is no such definite "break point." In addition, depending on the location of the convertor station and on the utility practice, the acceptable value of TOV may vary from scheme to scheme.

Also, in highly meshed systems having generators that are electrically close to the convertor station, the effective short-circuit impedance corresponding to the SCR value calculated by subtransient reactances will apply only to the first fundamental cycle, and the subsequent TOV would be higher as transient reactances rather than subtransient values influence the voltages.

The fundamental components of TOV ($TOV_{fc}$) calculated from Equation (27) in 8.5 have the following approximate values:

a) High SCR systems (SCR > 3): $TOV_{fc}$ lower than 1.25 pu
b) Low SCR systems (3 > SCR > 2): $TOV_{fc}$ higher than 1.25 but lower than 1.4 pu
c) Very low SCR systems (SCR < 2): $TOV_{fc}$ higher than 1.4 pu

[These are theoretical values, ignoring saturation of transformers; $TOV_{fc}$ values will be lower in reality due to this (refer to 8.1).] However, the TOV peak values that include harmonic components may not be reduced by saturation of convertor transformers.

It should be pointed out that operation with low SCR systems does not seem to cause particular difficulties from the point of view of transfer of power. Occasional temporary power reduction (see 2.2.4, 3.2.2, and 3.6.2) can be contained. However, the corresponding TOV is not always acceptable.

In Figure 2-7, $P_d/I_d$ curve MPC-2 was plotted using data of the Cross Channel scheme. It can be seen that for SCR = 3 (ACV-2) this would have resulted in $TOV_{fc}$ of just over 1.3 pu, which was not acceptable to the utility. Static var compensators were included in the installation to limit $TOV_{fc}$ to 1.16 pu. SCR equal to three is the minimum specified value; the operation is normally at an SCR value higher than three.

It is interesting to compare MPC for the uncompensated Cross Channel scheme with the MPC for the "average" scheme data used in Figures 2-6a and 2-6b for the same SCR = 3. For the "average" system, $TOV_{fc}$ is just over 1.2 pu, compared to the uncompensated Cross Channel scheme of just over 1.3 pu. This is due to the difference in the value of the commutating reactance and consequent higher var consumption. The difference in MAP values should also be noted.


Copyright © 1997 IEEE. All rights reserved.
Copyright The Institute of Electrical and Electronics Engineers, Inc.
Provided by IHS under license with IEEE
No reproduction or networking permitted without license from IHS
Not for Resale

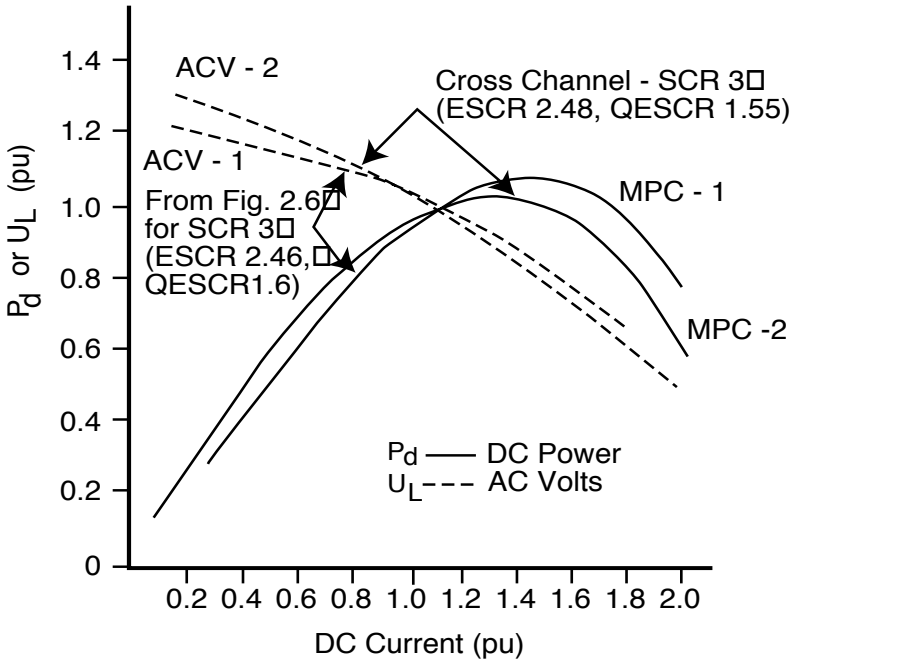


**Figure 2-7—Power and ac voltage curves for SCR = 3 for two different convertor characteristics**

### 2.2.5 Calculation of SCRs

#### 2.2.5.1 General

In many preliminary calculations it is convenient and customary to use a simplified representation of the ac system, as discussed in 2.2.5.2. To determine the system impedance and SCRs, digital short-circuit programs from different origins can give different results for SCR for the same system, while giving the correct results for the normal purpose of these programs, which are usually used for studying ac systems alone. For example, a program may not represent the transmission lines' shunt capacitance, which would give unrealistically low system impedance, $Z_s$, and in consequence, a too-high SCR. Some interaction phenomena are significantly influenced by the system resistive component (system damping), which is primarily provided by loads, but may not be represented in some short-circuit programs.

#### 2.2.5.2 Simplified representation of the ac/dc system

Referring to Figure 2-1, it is assumed that the ac system can be represented by a Thevenin equivalent emf at fundamental frequency, behind an impedance $Z$ (or admittance $Y = 1/Z$).

SCR is defined as the value of $Y$ at fundamental frequency, on a base of rated power (MW) of the convertor and rated ac system voltage, that is consistent with SCR defined in 2.2.1. Synchronous compensators, existing or supplied as part of the convertor station, are deemed to be connected as required for the operation considered; i.e., they form part of the SCR calculation.

Copyright © 1997 IEEE. All rights reserved.

Copyright The Institute of Electrical and Electronics Engineers, Inc.
Provided by IHS under license with IEEE
No reproduction or networking permitted without license from IHS
Not for Resale

ESCR is defined as $(Y + Y_c)$ on the same base as for SCR, where $Y_c$ is the admittance of all shunt filters and capacitor banks on the busbar that are connected for the operation under consideration. This definition is consistent with the definition in 2.2.1.

The following notes may be useful for defining a suitable system representation:

a) Representation of the ac system by an admittance defined by SCR is assumed to be relevant only to transients (e.g., ac faults) of a few hundred milliseconds. (For more detailed study of some particular characteristics, a more detailed representation may be required.)
b) As a consequence of a), the calculation of $Y$ at fundamental frequency shall assume that synchronous machine field controls, transformer tap positions, and capacitor switching controls have no appreciable effect during the transient.
c) The reactance value of a synchronous machine is not constant, but effectively depends on the part of the transient being studied and the method of supplying the field. The apparent value varies between subtransient and transient reactances (but not synchronous reactance). The effect of any errors in assumptions about this will normally be reduced by fixed ac system line and transformer reactances, hence calculation based on subtransient reactances (as commonly used in short-circuit level calculation) will generally be sufficiently accurate. However, in this simple representation it would be safer to use the transient reactance for synchronous compensators connected in the station and for any nearby synchronous machines.
d) The system damping is important for most phenomena, and therefore the impedance values corresponding to SCR and ESCR (and QESCR) should be expressed in polar form as magnitude and angle. Thus, for example, for a system with SCR = $3\angle -80°$ the addition of 0.6 pu of capacitors plus filters gives ESCR of about $2.4\angle -8°$. (Please note that because SCR and ESCR are defined as admittances [see 2.2.5.2], the angle should be negative as indicated.)
e) SCR (ESCR) values calculated at the ac terminals of the convertors may not be directly applicable in special cases, such as where the convertor transformers have tertiaries connected to a synchronous compensator or compensators. In this case, the physical position of the tertiary usually is between line and valve windings such that there is a finite reactance between the filter bus and the tertiary terminals.
f) If the ac filters are connected to the tertiary winding of the convertor transformer, and if this winding has a reactance value of almost zero (the tertiary is placed physically between line and valve windings), then the tertiary becomes the commutating bus. This means that the equivalent ac system impedance is increased by the reactance of the line winding. Short-circuit ratios must be calculated as if the line winding reactance forms part of the ac system.
g) Any capacitor banks associated with static var compensators (SVCs) should be lumped with other capacitors on the busbar. If switched capacitor banks are used, then the maximum value of capacitors that may be connected during the operation to give lowest value of ESCR (or OESCR) for a particular system configuration should be used. The representation of continuously responding SVCs requires careful consideration, as discussed in 2.2.1.5.
h) Short-circuit ratios defined in this subclause are not applicable for studies involving mechanical shaft resonances of machines; such studies should use relevant system representation. The same applies in general to all studies of slow phenomena associated with machines; e.g., inter-machine and inter-system swinging, field controls, and governors.
i) For some other studies (e.g., overvoltages and recovery from faults), it is important to represent the convertor transformer saturation properties and nearby loads accurately. This may also apply to other large transformers close to the convertor stations.

Although SCR (ESCR) calculated as above would give a numerical definition of the ac system admittance (and impedance) represented by the Thevenin equivalent circuit, when comparing the results all relevant convertor quantities must also be stated: commutating reactance $X_c$, delay angle $\alpha$ or commutation margin ($\gamma$), and the control strategy. As discussed in 2.2.1.4, QESCR takes most of these into account.


Copyright © 1997 IEEE. All rights reserved.
Copyright The Institute of Electrical and Electronics Engineers, Inc.
Provided by IHS under license with IEEE
No reproduction or networking permitted without license from IHS
Not for Resale

It was noted in 2.2.5.1 that different computer programs may give different values of system impedance, which may lead to small errors. The more direct method to obtain an equivalent system impedance value is to make all system emfs zero, inject a current at the terminal of the convertor, and measure the resulting voltage. This is, in effect, what a network reduction program does. It should always be remembered that it is necessary to obtain the value of the system impedance as accurately as possible; the short-circuit MVA has no direct relevance in the study of dc operation, although it is a convenient quantity to use in discussion.

#### 2.2.5.3 Load representation

It was pointed out in 2.2.5.1 that load representation is important. For example, induction motors add to the emf of the system, but they do collapse at low ac voltage. A large number of induction motors in the vicinity of the inverter may have considerable effect on the performance. It is recommended that users of both in-house and externally sourced computer programs scrutinize how loads are represented in assessing the validity of SCR calculations. Loads should be represented using the best knowledge available. In the absence of load data, it is suggested that load characteristics should be estimated rather than completely omitted. The ac/dc system behavior is influenced by load characteristics, and the omission of load representation may give misleading and possibly overly pessimistic results. For example, loads may contribute substantial damping to transient disturbances, and possibly be the source of additional short-circuit MVA.

### 2.2.6 Application of synchronous compensators

Synchronous compensators have been used to strengthen the ac system at the inverter end in a number of dc schemes. The cost and maintenance requirements of synchronous compensators may restrict their application to special situations.

In addition to the reduction of the system impedance, both at fundamental and harmonic frequencies, the synchronous compensators have the following beneficial characteristics:

a) They can supply both positive and negative continuously variable reactive power, which in most cases eliminates the need for frequent shunt capacitor switching.
b) They tend to increase the natural resonant frequency between the filters and the ac system.
c) They are able to provide an increase of reactive power on reduction of ac busbar voltage, in contrast with var reduction when supplied by shunt capacitors.

The application of synchronous compensators at schemes like Nelson River (Manitoba, Canada) and Itaipu (Brazil) has changed the system from being a very low SCR system to a low SCR system as defined in 2.2.4.

A requirement for dimensioning the synchronous compensator in these schemes was the need to limit the fundamental component of the temporary overvoltages to values lower than 1.4 pu. From the second table in 2.4, it can be seen that the operation at the CSCR corresponds to $TOV_{fc}$ of 1.4 pu (see also 3.1). It should be noted that the reduction of the system impedance, by addition of synchronous compensators, to reduce TOV has at the same time resulted in bringing the operating point, and therefore the operating direct current, to a smaller value than $I_{MAP}$.

### 2.2.7 Control of ac voltage by variable static equipment

The consequence of ac/dc interaction, when the ac system impedance is high, is evidenced by large ac voltage variations. Very fast and continuous ac voltage control would effectively strengthen the system.

The application of MO gapless surge arresters has contributed to the possibility of limiting TOV to required values without the need to use SCs.

Copyright © 1997 IEEE. All rights reserved.

Copyright The Institute of Electrical and Electronics Engineers, Inc.
Provided by IHS under license with IEEE
No reproduction or networking permitted without license from IHS
Not for Resale

#### 2.2.7.1 The application of TCR and SR static var compensators

A fast TCR or SR static var compensator can be used to keep the terminal ac voltage constant within the required range. The compensator var absorption must be continuously variable within its prescribed range.

In practice, the size (var range) of the TCR or SR has to be limited on economic grounds. These compensators lose control at very low ac voltage and may have limited overload range. The operating range is usually increased by the use of thyristor-switched capacitors (TSCs) and/or mechanically switched capacitors to keep the TCR or SR within its designed range.

Usually, a voltage/current or voltage/var characteristic of the TCR or SR is designed with a slope to suit the ac system, usually 3–5% on the SVC rating. The equivalent system impedance is determined by the addition of this slope reactance in parallel with the ac system impedance. However, as discussed in 2.2.1.5, the effect of a TCR or SR is not included in the definition of SCR but has to be considered for each separate scheme.

#### 2.2.7.2 The application of the inverter with variable γ

The reactive power consumption of the inverter can be varied by operation with different values of the commutation margin angle γ (see Annex A of Part I).

Highgate and Virginia Smith (Sidney) convertors in the United States and McNeill in Alberta, Canada, are examples of schemes that are designed to operate with very low SCR systems, and TOV is controlled by a combination of MO arresters, convertor control action, and subsequent mechanical switching of capacitors/filters. In the case of the McNeill station, the effective system impedance is increased by the line winding of the convertor transformer [see 2.2.5.2, item c).]

If γ is varied in response to ac voltage variation, the inverter can be designed to act as a TCR in a limited range of conditions. As the dc transmission voltage depends on the value of γ, during steady-state conditions the convertor transformer tap-changer and mechanically or thyristor switched capacitors are used to keep γ near its nominal value. These matters are further discussed in Clauses 3 and 4.

### 2.2.8 Multiconvertor systems

General guidelines have to be considered with caution while studying a system, because a particular system has to be studied in detail commensurate with its complexity.

Practical experience with, and the background investigations of, multiconvertor systems are not as widespread as that for more conventional two-terminal schemes. For this reason, the comments in this subclause are kept in very general terms.

#### 2.2.8.1 Multi-infeed systems

Multi-infeed inverters connected to the same busbar or being electrically close can be divided into two categories:

a) All inverters are controlled by one master controller, which shares the duty evenly among the separate inverters. In this case, the ac system impedance should be referred to the total dc power. The short-circuit ratios should be calculated as if this were one large inverter. However, it should be noted that even when only one master controller is used, the recovery of individual inverters can be staggered with the effect being as if each inverter is recovering against a stronger system.
b) Two (or more) inverters are operated separately. As an example, suppose inverter A is at constant power, and inverter B is at constant power but with power modulation. In most respects, the various phenomena would be as if the system consisted of one large inverter. However, the demand for power increase from the inverter B will respond as if short-circuit ratios are referred only to its own power, but $Q_c$ in the formula must include all capacitors used with both inverters.


Copyright © 1997 IEEE. All rights reserved.
Copyright The Institute of Electrical and Electronics Engineers, Inc.
Provided by IHS under license with IEEE
No reproduction or networking permitted without license from IHS
Not for Resale

#### 2.2.8.2 Rectifier–inverter system

There are regions where convertors of two or more different dc schemes of comparable ratings are located electrically close to each other. If one convertor is operating as an inverter while a neighboring convertor acts as a rectifier, it can be viewed that the power infeed from the inverter of one dc scheme is totally or partially taken away by the rectifier of another dc scheme, as shown in Figure 2-8. The situation is not dissimilar from multi-infeed systems (2.2.8.1). To the first approximation, the reactive power consumption of the rectifier and the inverter are similar. Therefore, for most phenomena, the SCRs should be calculated by reference to the total power *P* of rectifier plus inverter.

If the common ac system voltage suddenly reduces with or without ac system impedance increase, the rectifier will consume more reactive power and both dc currents will increase to maintain dc power which would further increase reactive power consumption.

For the remote inverter, regarding any effects due to its ac system changes or power changes, its short-circuit ratio should be referred only to its own power.

#### 2.2.8.3 Multiterminal schemes

Each inverter SCR should be calculated with reference only to its own power for all phenomena, except when considering recovery from faults. The dc peak current due to faults and commutation failures will depend on the combined rating of the rectifiers. This fact will lead to a risk of consequential commutation failures, because the recovery will be carried out at this higher dc overcurrent compared to what would be expected based on the inverter rating.

#### 2.2.8.4 Two independent dc schemes operating in the same ac system

Two independent convertors may be connected to two different parts of the same ac system. To make two inverters independent of each other, the ac impedance between them should have a high value. If two inverters are interconnected by a high-impedance ac line, they will be more independent of each other than if they are further away from each other geographically but connected by strong ac lines. A low-impedance ac interconnection may lead to more interactions between the two inverters than if they were interconnected by a "weak" ac link. An ac system fault anywhere on the "strong" ac system will affect, more or less similarly, the inverters connected to it and will approach conditions described in 2.2.8.1.

### 2.2.9 DC link in parallel with an ac line

The effect of an arrangement such as is illustrated in Figure 2-9 is not immediately obvious, and it is advisable to carry out studies with full representation rather than rely on SCRs. The following comments may serve as general guidelines.

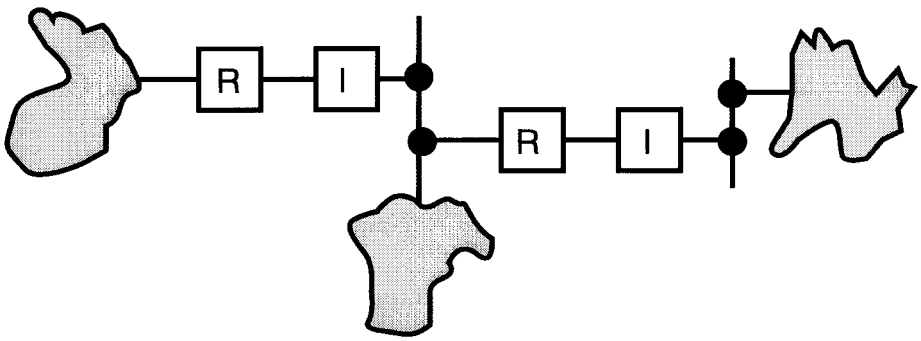


**Figure 2-8—A rectifier and inverter connected at the same location**

Copyright © 1997 IEEE. All rights reserved.

Copyright The Institute of Electrical and Electronics Engineers, Inc.
Provided by IHS under license with IEEE
No reproduction or networking permitted without license from IHS
Not for Resale

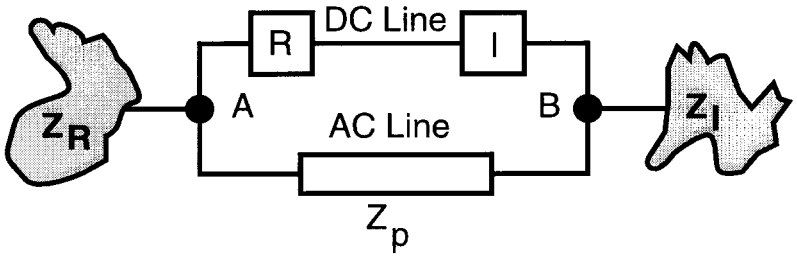


**Figure 2-9—Ac and dc operating in parallel**

### 2.2.9.1 Power transfer limits

In Clause 3 it is stated that values of MAP can be calculated for point-to-point schemes initially for the receiving terminal under the assumption that the sending terminal will not impose a limitation, particularly as the rectifier station can be designed, if that is desirable, not to impose a power limitation. However, for the system shown in Figure 2-9, the following cases will indicate the position:

a) High SCR rectifier-end ac system (low $Z_R$) and high-impedance parallel ac path (high $Z_P$).
In this case, the rectifier loading will have negligible effect on the ac voltage at A, and the rectifier will not impose a limitation as for normal point-to-point transmission. Furthermore, the inverter-end ac system will benefit from the ac parallel line, and the impedance to calculate the SCR at B would be equal to $Z_I$ in parallel with $Z_P + Z_R$.

b) Low and very low SCR ac system at rectifier end (high $Z_R$) and low impedance parallel path (low $Z_P$).
In this case, the rectifier loading will influence the voltage at A, and due to the low $Z_P$, the voltage at B will be affected by both inverter and rectifier loading. Thus, the two convertors will behave in a manner approaching the case of being connected to the same ac busbars. The use of SCR is not recommended in this case and full representation is preferred.

c) Low and very low SCR ac system at rectifier end (high $Z_R$) and high impedance parallel ac path (high $Z_P$).
In this case, the rectifier loading may be limited by the low SCR sending-end system. The high $Z_P$ will tend to decouple the two ac systems, but again, the use of SCR is not recommended and full representation is preferred.

d) For the fourth combination of high SCR rectifier end system (low $Z_R$) and low impedance parallel ac path (low $Z_P$), the inverter end system is unlikely to have low or very low SCR.

### 2.2.9.2 Temporary overvoltages

Direct-current load rejection affects both the rectifier and the inverter, and therefore similar arguments apply as in 2.2.9.1.

### 2.2.9.3 Recovery from faults

The inverter recovers against a system impedance, and therefore it will always benefit from a reduced impedance.

### 2.2.9.4 Resonances

This case is similar to 2.2.9.3.


Copyright © 1997 IEEE. All rights reserved.
Copyright The Institute of Electrical and Electronics Engineers, Inc.
Provided by IHS under license with IEEE
No reproduction or networking permitted without license from IHS
Not for Resale

### 2.2.10 General comments

It has been pointed out that the use of SCRs for estimating scheme performance should be made with caution. This is true in particular if the system departs from the standard point-to-point scheme. The more complex the scheme, the greater the need for full representation of the system.

When studying or designing a scheme, the ac system representation has to be as accurate and comprehensive as required by a particular study. It must be stressed that it is often required to assume the possibility of a particular ac/dc interaction in order to set up the simulator correctly or use a digital program. For example, in a number of schemes no studies were carried out during planning or design stages that would have looked for second harmonic or subsynchronous interactions and instabilities or resonances, and yet these effects were experienced in service. One purpose of this guide is to draw attention to possible ac/dc interactions so that correct studies can be carried out at appropriate times.

The effects of dc operation and mal-operation at fundamental frequency with a balanced ac system can be simulated accurately using load flow, transient stability, and other digital programs. The operating conditions with distorted and/or unbalanced ac systems are studied by the use of dc simulators and electromagnetic transients program (EMTP)-type programs.

## 2.3 Inadequate and zero mechanical inertia

### 2.3.1 Inertia constants

Turbine generators in an ac system represent a large rotating mass. Their inertia ensures that an ac system does not collapse due to system faults. During a fault, a balance of power between load consumption and generation is not maintained. The mechanical inertia of a turbine generator set ensures that its speed, and therefore the frequency of the system (except for some oscillation), has not changed substantially.

A typical steam turbine generator set may have an inertia constant $H$ of 5 s based on the generator MVA rating. Assume that a generator operates at 0.9 power factor, so that the inertia constant $H_p$ based on its MW rating is

$$H_p = \frac{5}{0.9} = 5.55 \text{ s}$$

Assuming that 2/3 of the power of an ac system is supplied by dc, then the inertia of the system referred to dc power would correspond to

$$H_{\text{dc}} = \frac{5.55}{2} = 2.77 \text{ s, based on dc infeed}$$

As is shown in the next subclause, an $H_{\text{dc}}$ of 2.77 is usually adequate for satisfactory operation. It follows that the dc infeed must represent a very large proportion of the system power supply, before steps need to be taken to increase the inertia by addition of a synchronous compensator.

### 2.3.2 Infeed into a system without any generation

#### 2.3.2.1 Calculation of frequency change

If all the power is brought into a system by dc (i.e., if there is no local generator), then that system will have no mechanical inertia (apart from the inertia of motor loads, which can initially be neglected). The inverters presently used in dc are line-commutated; i.e., they rely for their operation on the ac system providing adequate

Copyright © 1997 IEEE. All rights reserved.

Copyright The Institute of Electrical and Electronics Engineers, Inc.
Provided by IHS under license with IEEE
No reproduction or networking permitted without license from IHS
Not for Resale

sinusoidal voltage to achieve the commutation process. Therefore, a dc inverter supplying an "island system" must be provided with a synchronous compensator having inertia adequate to maintain the frequency and voltage at an acceptable level during system faults.

The relationship between change of machine frequency (*df*), mechanical power input ($P_m$), and electrical power output ($P_e$) for small changes of frequency can be represented by

$$df = \frac{(P_m - P_c) \times f_o \times dt}{2H} \tag{4}$$

Where $f_o$ is the system nominal frequency and $H$ is the conventional inertia constant of the machine expressed in MW·s/MVA of machine capacity, and $P_m$ and $P_e$ are in per unit of machine MVA rating.

If the inertia constant is converted to the base of dc power, it gives an effective inertia constant, $H_{\mathrm{dc}}$.

$$H_{\mathrm{dc}} = H \cdot \frac{\mathrm{MVA\ rating\ of\ the\ machine}}{\mathrm{MW\ rating\ of\ the\ dc\ system}} \tag{5}$$

giving from Equation (4)

$$df = \frac{p \times dt \times f_{\mathrm{o}}}{2H_{dc}} \tag{6}$$

Where $p$ is the per unit machine accelerating power ($P_{\mathrm{m}} - P_{\mathrm{c}}$) to the base of rated dc power.

It can therefore be seen that $H_{\mathrm{dc}}$ gives a measure of the inertial weakness of the system by relating the change of machine speed to the temporary energy imbalance ($p \cdot dt$) imposed by any given disturbance.

Temporary reduction of the power infeed by dc may be caused by the following typical events:

a) A commutation failure lasting some 100 ms
b) A fault in the sending ac system or in the receiving system that may last up to some eight cycles, depending on the backup breaker setting
c) A dc line fault, which may be cleared by dc controls in 100–200 ms

From Equation (6)

$$H_{\mathrm{dc}} = \frac{p \times dt \times f_o}{2df} \tag{7}$$

For a loss of power for, say, 200 ms, to allow for the breaker clearance time and for the fact that the dc power would not instantly recover to its rated level, it can be calculated from Equation (7) that $H_{\mathrm{dc}}$ to limit the frequency reduction to be, for example, 5%, will be equal to 2 s. It should be stressed that these values give only an approximate indication of the requirements.

Zero-inertia systems are further discussed in Clause 9.

#### 2.3.2.2 Forced commutation

Feeding into a system without any generation of its own and without synchronous compensators is not possible with conventional, line-commutated inverters, but "forced commutation" is required and convertor circuits have been proposed. However, such schemes have not as yet been considered for actual projects.


Copyright © 1997 IEEE. All rights reserved.
Copyright The Institute of Electrical and Electronics Engineers, Inc.
Provided by IHS under license with IEEE
No reproduction or networking permitted without license from IHS
Not for Resale

#### 2.3.2.3 Gate turn-off thyristors (GTOs)

Inverters using gate turn-off thyristors (GTOs), or similar devices, supplying power into a "dead load" have been used in industrial applications. However, so far, the application of these devices to dc transmission has not proved economical, but the promise is there.

## 2.4 Numerical examples of CSCRs and $TOV_{fc}$ values

CSCRs and the fundamental component of the temporary overvoltage for an assumed impedance angle of $\phi = 80°$ have been calculated for six cases of inverter operation with different equipment characteristics. For cases A, B, C, and D, it is assumed that $Q_c = Q_d$. For cases E and F, shunt capacitors are sized to provide some net vars to the ac system at the rated condition.

| Case | Commutating reactance $X_c$ % | Commutation margin γ (minimum) | $Q_d$ | $Q_c$ |
|---|---|---|---|---|
| A | 12% | 18° | 0.5 P | 0.5 P |
| B | 15% | 18° | 0.54 P | 0.54 P |
| C | 20% | 18° | 0.6 P | 0.6 P |
| D | 20% | 20° | 0.63 P | 0.63 P |
| E | 12.6% | 17° | 0.5 P | 0.875 P |
| F | 20% | 18° | 0.6 P | 0.875 P |

| Case | CSCR | | CESCR* | | CQESCR† | $TOV_{fc}$‡ |
|---|---|---|---|---|---|---|
| A | 1.87 | –80° | 1.37 | –76.4° | 0.91 | 1.43 |
| B | 2.01 | –80° | 1.47 | –76.4° | 0.95 | 1.42 |
| C | 2.2 | –80° | 1.6 | –76.3° | 1.0 | 1.40 |
| D | 2.25 | –80° | 1.62 | –76.1° | 0.99 | 1.41 |
| E | 2.24 | –80° | 1.37 | –73.7° | 0.91 | 1.39 |
| F | 2.47 | –80° | 1.60 | –74.5° | 1.0 | 1.39 |

NOTE—For these examples, commutating reactance = convertor transformer leakage reactance.

* Calculated by the equations in 2.5.
† Calculated from CESCR by adding the corresponding value of $Q_c$ in pu of $P_d$.
‡ Calculated by Equation (27), which gives a theoretical value, as it does not include the transformer saturation effect.

The maximum difference between the cases are as follows (see also Figure 2-10):

| CSCR | CESCR | CQESCR | TOV |
|---|---|---|---|
| 32.0% | 17% | 10% | 1.8% |

It is clear that the value of MAP depends on the system impedance, shunt capacitor Mvar $Q_c$, and the reactive consumption of the inverter $Q_d$. For this reason, the variation in CSCR is the largest. CESCR takes into account the influence of $Q_c$ and the difference in CESCRs is greatly reduced. CQSCR takes into account the value of both $Q_c$ and $Q_d$. If QESCR is between 0.9 and 1.0, the operation is at or near MAP.

Copyright © 1997 IEEE. All rights reserved.

Copyright The Institute of Electrical and Electronics Engineers, Inc.
Provided by IHS under license with IEEE
No reproduction or networking permitted without license from IHS
Not for Resale

It is also interesting to note that the value calculated for TOV for all cases is around 1.4 pu. It can be shown that if the operation at MAP (i.e., at CSCR) is at unity power factor, then $TOV_{fc}$ (for complete load rejection) is $k \cdot 2^{1/2}$ of the terminal ac voltage at MAP. The factor $k$ has a value close to unity for typical ac system data (see also 3.1).

Even if the normal operation is at a γ larger than minimum, CSCR should be calculated for γ minimum, as that would represent the maximum obtainable power (MPC). However, TOV should be calculated using the normal (operating) γ, as the rated $Q_d$ (not the one corresponding to minimum γ) will be rejected by the convertor in case of a fault.

CSCR, CESCR, and CQESCR are plotted on Figure 2-10 against the commutating reactance $X_c$ for values of γ = 15° and 20°, Φ = 70° and 90° and for $Q_c/Q_d$ = 1.0 and 1.5.

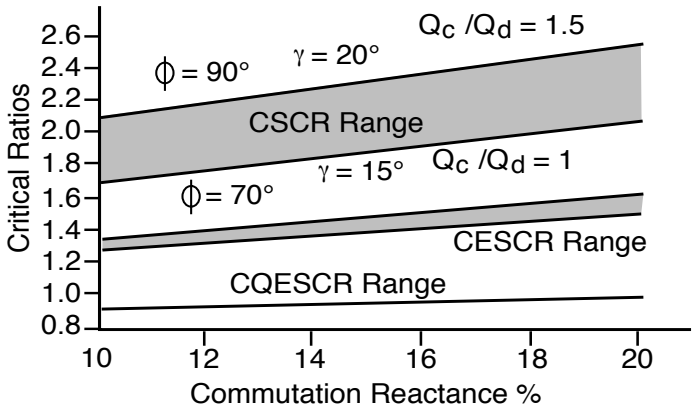


**Figure 2-10—Sensitivity of CSCRs**

## 2.5 Calculation of CSCRs

If the starting conditions ($P_d$ = 1.0, $U_L$ = 1.0, $I_d$ = 1.0) coincide with the MAP of MPC (e.g., Figure 2-3 for SCR = 2), the corresponding SCR is termed "critical."

For a simplified system representation (Figure 2-1), the critical ac system impedance can be calculated from the following equation:

$$\text{CESCR} = \frac{1}{U_L^2}\left[\sin\phi P_d \tan(\gamma + u) - Q_d + \sqrt{\left[\frac{P_d}{\cos(\gamma + u)}\right]^2 - \cos^2\phi(P_d \tan(\gamma + u) - Q_d)^2}\right] \quad (8)$$

It should be noted that shunt capacitors must be assumed to be connected.

The value of CESCR is little affected by the system damping in the range of 70°–90°, and if system damping is neglected ($\phi$ = 90° approximately), a good approximation is obtained by the following:

$$\text{CESCR} = \frac{1}{U^2}[-Q_d + P_d \text{cotan}\, 1/2(90° - \gamma - u)] \quad (9)$$

$U_L$ is convertor bus ac voltage per unit,

$Q_d$ is reactive power consumed by the inverter (per unit) [calculated from Equation (A.7), (A.11), or (A.13) in Annex A of Part I],


Copyright © 1997 IEEE. All rights reserved.
Copyright The Institute of Electrical and Electronics Engineers, Inc.
Provided by IHS under license with IEEE
No reproduction or networking permitted without license from IHS
Not for Resale

$P_d$ is active power supplied by the inverter to the ac system (per unit),
$\gamma$ is extinction angle of the inverter,
$u$ is overlap angle of the inverter [calculated from Equation (A.9) in Annex A of Part I],
$\phi$ is angle of ac system impedance.

CSCR can be calculated by adding $Q_c$ to Equation (9).

CESCR can also be calculated by considering the effect on the ac voltage of small var changes at the convertor ac busbars. The magnitude of this effect can be judged by the voltage stability factor.

The voltage stability factor (VSF) is defined as the incremental ac voltage variation, $dU_L$, due to a small reactive power ($dQ$) injected into the commutation busbar for a given power level, i.e.,

$$\text{VSF} = \frac{dU_L}{dQ} \tag{10}$$

This index can be used for calculating the critical ratios for large systems using digital computer programs. VSF is a more general factor than CSCR and CESCR, and is also used in the study of ac systems. VSF also permits an approximate evaluation of the system dynamic behavior under small perturbations from a voltage oscillation point of view. VSF is plotted against ESCR in Figure 2-11. This figure assumes operation in the constant $\gamma$ mode. A positive VSF indicates that the dc would operate, in constant $\gamma$ mode, at currents smaller than $I_{\text{MAP}}$. A negative VSF indicates that the system would operate, in constant $\gamma$ mode, at a dc current greater than $I_{\text{MAP.}}$ The transition point of VSF as dc current changes gives the same criterion as the MAP concept and Equation (1) applies identically to both. It should be noted that a negative VSF indicates that the constant power control mode with constant $\gamma$ would be unstable. However, in constant current control with constant $\gamma$, VSF has a positive value.

CSCRs can be calculated with adequate accuracy for planning considerations using the following simple equations derived from Equation (3):

$$\text{CESCR} = \text{CQESCR}(1 + Q_d) \tag{11}$$

and

$$\text{CSCR} = \text{CQESCR}((1 + Q_d) + Q_c) \tag{12}$$

where

$Q_d$ and $Q_c$ are in per unit of $P_d$.

From Figure 2-12, approximate values of CQESCR and $Q_d$ can be obtained, and $Q_c$ can be selected according to the desired reactive compensation.

*Example 1, for average value of the commutating reactance $X_c$ = 15%:* From Figure 2-12, CQESCR = 0.95; for $\gamma = 15°$, $Q_d = 0.54$; and for $Q_c = Q_d$, the following value for CSCR is obtained from Equation (3):

CSCR = 0.95 * (1 + 0.54) + 0.54 = 2.0

Using the correct Equation (1) for $X_c = 15\%$, $\gamma = 18°$, $Q_c = Q_d$, $\Phi = 80°$, CSCR = 2.0.
Using the correct Equation (1) for $X_c = 15\%$, $\gamma = 20°$, $Q_c = Q_d$, $\Phi = 70°$, CSCR = 2.04.

Using Equation (12) and Figure 2-12, we also get CSCR = 2.04.

Copyright © 1997 IEEE. All rights reserved.

Copyright The Institute of Electrical and Electronics Engineers, Inc.
Provided by IHS under license with IEEE
No reproduction or networking permitted without license from IHS
Not for Resale

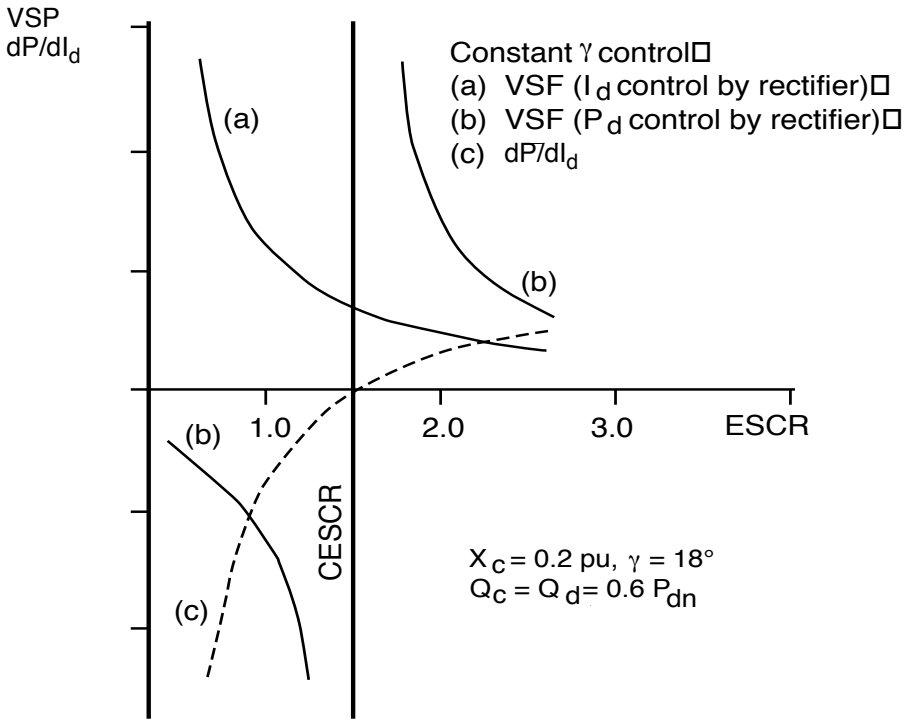


**Figure 2-11—VSF and $dP/dI_d$ as a function of the ESCR at nominal operating conditions and unity power factor**

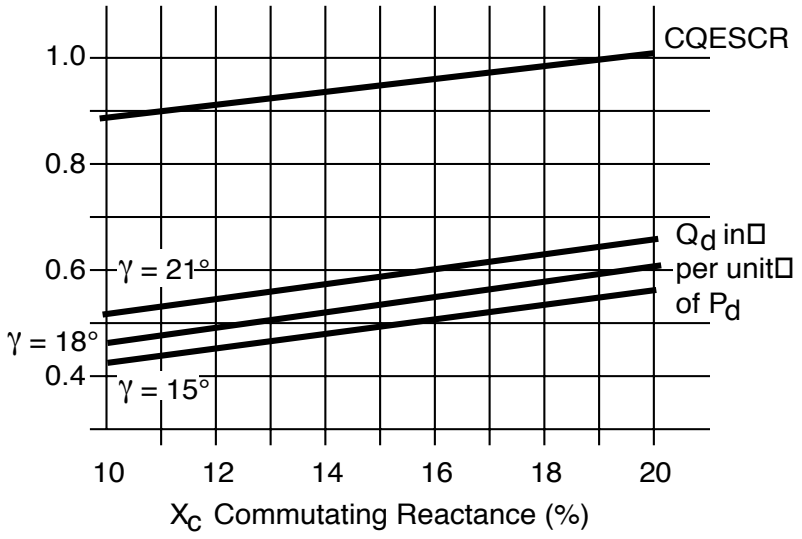


**Figure 2-12—CQESCR and $Q_d$ as a function of $X_c$**



Copyright © 1997 IEEE. All rights reserved.
Copyright The Institute of Electrical and Electronics Engineers, Inc.
Provided by IHS under license with IEEE
No reproduction or networking permitted without license from IHS
Not for Resale

*Example 2, for $X_c$ = 20%:* From Figure 2-12, CQSCR = 1.0; and for $\gamma = 20°$, $Q_d = 0.64$, for $Q_c = 1.5Q_d$:

CSCR = 1.0 * (1 + 0.64) + 0.96 = 2.6

Using the correct formula for $X_c = 20\%$, $\gamma = 20°$, $\Phi = 70°$, $Q_c = 1.5Q_d$, CSCR = 2.56.
Using the correct formula for $X_c = 20\%$, $\gamma = 15°$, $\Phi = 70°$, $Q_c = 1.5Q_d$, CSCR = 2.4.
Using Equation (12) and Figure 2-12, we also get CSCR = 2.04.

## 2.6 Numerical examples of power reduction due to ac system impedance increase and ac voltage reduction

As discussed in 2.2.4.5, power reduction due to a reduction of the terminal voltage is greater if the system impedance is increased at the same time.

Consider the case represented in Figure 2.6a and Figure 2-6b.

Initial conditions at SCR = 3.

| System emf | $I_d$ | $U_L$ | $U_d$ | $P_d$ | $\gamma$ | SCR |
|---|---|---|---|---|---|---|
| 0.998 | 1.0 | 1.0 | 1.0 | 1.0 | 18° | 3 |

a) Condition after the line trip, increases $Z_s$ by 1/3.

| **0.998** | **1.0** | **0.93** | **0.92** | **0.92** | **18°** | **2** |
|---|---|---|---|---|---|---|
| 0.998 | 1.1 | 0.84 | 0.81 | 0.90 | 18° | 2 |
| 0.998 | 0.96 | 0.97 | 0.96 | 0.93 (MAP) | 18° | 2 |

b) Condition after system emf reduces to give $U_L = 0.93$ at SCR = 3.

| **0.947** | **1.0** | **0.93** | **0.92** | **0.92** | **18°** | **3** |
|---|---|---|---|---|---|---|
| 0.947 | 1.1 | 0.89 | 0.87 | 0.96 | 18° | 3 |
| 0.947 | 1.25 | 0.82 | 0.78 | 0.98(MAP) | 18° | 3 |

It can be seen that conditions immediately after system change and before dc current changes (i.e., at $I_d = 1.0$) are identical for the two cases, but in case a), $I_{MAP}$ is at 0.96 pu, and in case b), it is at 1.25 pu of $I_d$. Operation at a current limit of, say 1.1 pu, would result in a power of 0.9 in case a) and 0.96 in case b).

A demand to maintain rated power (without, say, capacitor switching) at a specified minimum SCR for a sudden system change may not justify the increase in the extra cost of the convertor equipment and the extra cost of losses. This is especially true if the particular system change is an uncommon event.

Copyright © 1997 IEEE. All rights reserved.

Copyright The Institute of Electrical and Electronics Engineers, Inc.
Provided by IHS under license with IEEE
No reproduction or networking permitted without license from IHS
Not for Resale

## 2.7 AC/DC system strength—summary tables

### 2.7.1 Power transfer and TOV

| | **MAP[2]** | **$TOV_{fc}$ (theoretical)** |
|---|---|---|
| High SCR systems<br>SCR > 3, ESCR > 2.5 | $P_{MAP} > 1.1$ | $1.25 < TOV_{fc}$ |
| Low SCR systems<br>3 > SCR > 2, 2.5 > ESCR > 1.5 | $P_{MAP} > 1.1$ | $1.25 < TOV_{fc} < 1.4$ |
| Very low SCR systems<br>2 > SCR, 1.5 > ESCR | [3] | $TOV_{fc} > 1.4$ |

### 2.7.2 CSCRs

CSCR = 2

CESCR = 1.47

CQESCR = 0.95

NOTES to 2.7.1 and 2.7.2:

1—The figures in 2.7.1 and 2.7.2 are based on assumed typical values of $X_c$ (15%), $\gamma_{min}$ (18°), and $Q_d = Q_c = 0.54 \cdot P_{dN}$.

If $X_c$ and $\gamma_{min}$ have higher values resulting in larger $Q_d$, then the theoretical division between high and low SCR systems would be at an SCR value higher than 3, and the division between low SCR and very low SCR systems would be at an SCR value higher than 2.

Similarly, values of ESCR, CSCR, or CESCR would have correspondingly higher values.

CQESCR would still have a value near unity; see Figure 2-10.

2—$P_{MAP}$ represents the maximum power immediately available starting from nominal (rated) conditions ($P_d$, $U_L$, and $I_d$ are all at one per unit, and $\gamma_{min}$ = const), without the use of fast ac voltage control.

3—The additional power available immediately, starting from nominal rated conditions, depends on the equipment design; i.e., the value of γ, or on the available range of TCR and SR.

### 2.7.3 Inadequate inertia systems

To avoid frequency reduction by more than 5% (i.e., 2.5 Hz for 50 Hz systems or 3 Hz for 60 Hz systems) due to a system fault, the effective dc inertia constant, $H_{DC}$, should be greater than 2 s.

# 3. DC power transfer limits

## 3.1 Description of phenomena

Considering the fundamental components of ac currents and voltages, a power system may exhibit two major types of instabilities:

a) Phase angle instability and
b) Voltage instability


Copyright © 1997 IEEE. All rights reserved.
Copyright The Institute of Electrical and Electronics Engineers, Inc.
Provided by IHS under license with IEEE
No reproduction or networking permitted without license from IHS
Not for Resale

The first of these is characterized by the fact that, after a disturbance, a generator or a group of generators loses synchronism with the rest of the system and line trips are executed by out-of-step relays or some other protection. The reason for the system to separate could either be that no new operating point exists (steady-state instability), or that the system cannot settle down to the new equilibrium point due to the kinetic energy injected into the rotors of the generators as a consequence of the fault (transient instability). The system could also become unstable due to inadequate damping. The time scale for this instability is typically in the region of a few to ten seconds. These matters are discussed further in Clause 7.

The voltage instability is characterized by the fact that the voltage at a certain bus or in a certain region of the network progressively decreases. (Usually it collapses, and this type of instability is often called voltage collapse.) The generator pole angles do not necessarily change significantly. (This is at least true during the initial stages of the breakdown. The voltage instability may cause protection to act, which could cause the system to become phase-angle unstable). The time scale for this instability may vary substantially, depending on different characteristics of the system. If tap-changers are involved, the process can extend over several minutes. The instability could develop much faster if, for example, tripping of a line or of a shunt capacitor bank results in sudden lack of voltage support, or some fast controllable devices play decisive roles in the dynamics of the system.

Extensive work is going on at present concerning the voltage collapse phenomenon as a consequence of a number of large breakdowns and disturbances that occurred in recent years and are believed to have been caused by voltage instabilities. No generally accepted method of analysis or description of the phenomenon exists for a generic system, but some general characteristics could be described by the following simple model.

Consider a load supplied by a strong network via a transmission line, as in Figure 3-1. For a given load, there exist in steady state two possible modes of operation: one with “high” voltage and “low” current, and one with “low” voltage and “high” current. Normally, the first of these two solutions is the desired one, since it gives lower losses and exhibits other properties that are attractive. If the voltage at the sending end is kept constant, curves as shown in Figure 3-2a are obtained for different power factors of the load. From these curves the following important observations can be made:

— There is a maximum possible load that can be supplied at a given power factor.
— For a given load smaller than the maximum, two different operating points exist corresponding to different voltage levels.

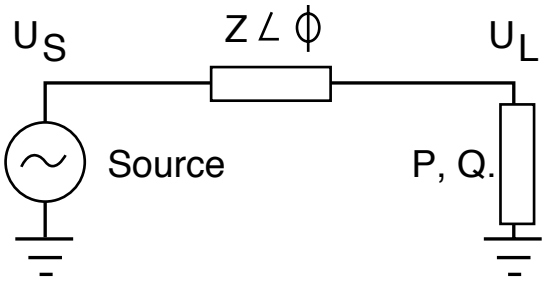


**Figure 3-1—Simplified ac system representation**

Furthermore, a simple analysis shows that

— For operating points on the upper branch of the curve, $dU/dQ > 0$; and on the lower branch, $dU/dQ < 0$.
— If $U_s$ is the voltage at the sending end it can be shown that $dU/dU_s > 0$ for points on the upper branch, whereas $dU/dU_s < 0$ on the lower branch.

Copyright © 1997 IEEE. All rights reserved.

Copyright The Institute of Electrical and Electronics Engineers, Inc.
Provided by IHS under license with IEEE
No reproduction or networking permitted without license from IHS
Not for Resale

The last two observations, together with the standard ways of controlling voltage in ac systems, lead to the fact that points on the upper branch are called stable and those on the lower branch are called unstable. The point corresponding to the maximum load is mathematically called a static bifurcation point. If a power larger than this maximum is demanded by a load device, the system cannot converge to any of the solutions that are given in Figure 3-2a. To predict the behavior of the system for such a case, the dynamic properties of the system are needed, such as load characteristics, tap-changer control, and generator/motor dynamics.

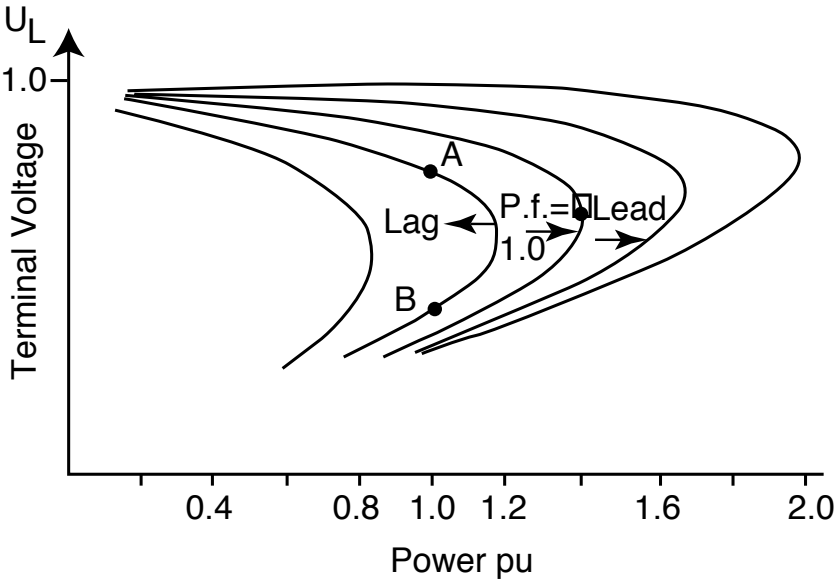


**Figure 3-2a—Terminal voltage versus power for different load power factors**

Consider the curve for unity power factor of Figure 3-2b for the case in which the small resistance of the ac line is neglected. It can be shown that for such a case, the terminal voltage, $U_L$, corresponding to the MAP, is related to the sending end voltage by the following equation:

$$U_L = \frac{U_s}{\sqrt{2}} \tag{13}$$

In the curves in Clause 2, dc power and ac terminal voltages are plotted as a function of dc current. From these curves it is seen that the ac terminal voltage is a monotonic decreasing function of dc current, and consequently there is a unique relationship between the dc current and the ac terminal voltage. Therefore, it is possible to plot the dc power as a function of the ac terminal voltage. Furthermore, if in such a plot the ac terminal voltage is on the y-axis and the dc power on the x-axis, the well-known ac voltage/power curve used in ac system analysis is obtained. Some of the curves shown as dc power versus dc current will be discussed below as ac voltage versus dc power.

The ac system impedance for Figure 3-2b was chosen to be equivalent to the system impedance of the inverter operation curve for SCR = 2 (ESCR = 1.46) of Figure 2-3. The ac voltage/power curve corresponding to Figure 2-3 for SCR = 2 is almost identical to that of Figure 3-2b. The reason for this is that in Figure 2-3, the power factor at $P_{d\mathrm{N}}$ = 1.0 pu is unity.

AC voltage and power from Figure 3-3 for SCR = 4.5 and from Figure 3-4 for SCR = 3 are plotted in Figure 3-2c. The main difference between the curves of Figure 3-2c and Figure 3-2a is that the former are calculated to give one per unit ac voltage at one per unit dc power, and those of the latter are calculated to


Copyright © 1997 IEEE. All rights reserved.
Copyright The Institute of Electrical and Electronics Engineers, Inc.
Provided by IHS under license with IEEE
No reproduction or networking permitted without license from IHS
Not for Resale

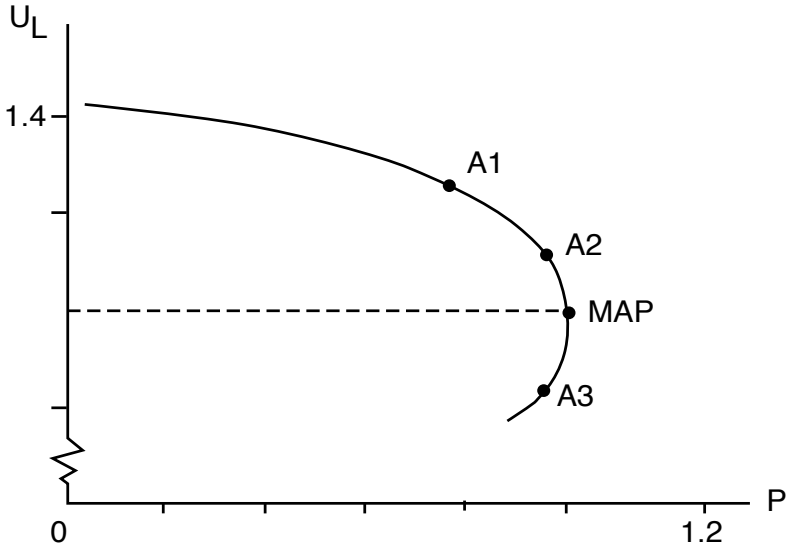


**Figure 3-2b—AC voltage/power curve (unity load power factor)**

give one per unit ac voltage at zero power; also, there are differences in system impedances in the former curves. However, curves corresponding to the operation of a dc convertor are the same as those of an ac load having the same *P* and *Q* characteristics.

The third curve in Figure 3-2c corresponds to the curve for SCR = 2 of Figure 3-4. This curve is obtained by tripping one of the two parallel ac lines to which the inverter was connected (Figure 2-4) when operating at the point A of the curve for SCR = 3, as discussed in 2.2.4.2 and 3.2.2. It can be seen that the maximum power (MAP) of the curve, corresponding to the new condition, is lower than the power before the disturbance at point A. The attempt of the convertor load to draw an increasing current, in order to maintain the original power, would result in voltage collapse, as already discussed.

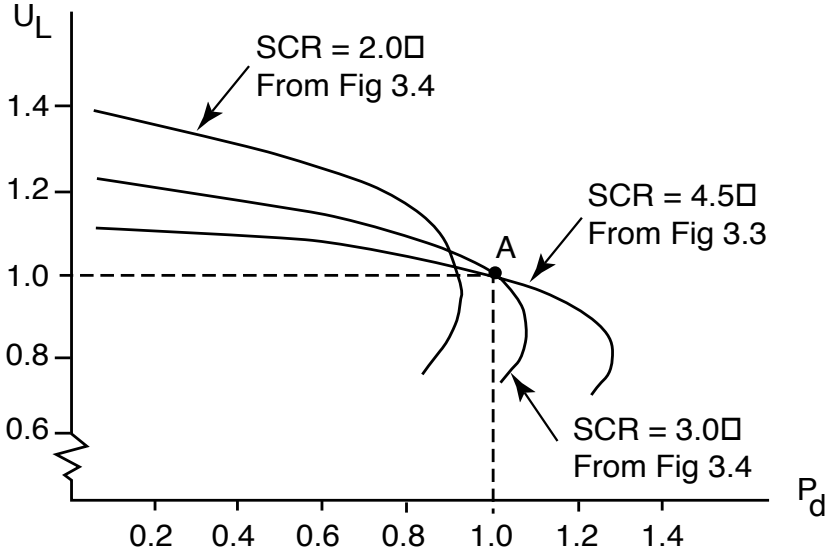


**Figure 3-2c—AC voltage—dc power curves**

Copyright © 1997 IEEE. All rights reserved.

Copyright The Institute of Electrical and Electronics Engineers, Inc.
Provided by IHS under license with IEEE
No reproduction or networking permitted without license from IHS
Not for Resale

An important factor, which differs in the dc case as compared with the pure ac configuration, is the controllability of the dc convertor. As will be shown in this clause, unlike the general ac case, the convertors can be controlled in such a way that voltage instability does not occur and that, moreover, the dc controls can further enhance the performance of the ac system. For these reasons, it is convenient to plot power against dc current, the controlled quantity, rather than against the voltage, but the phenomena are considered the same.

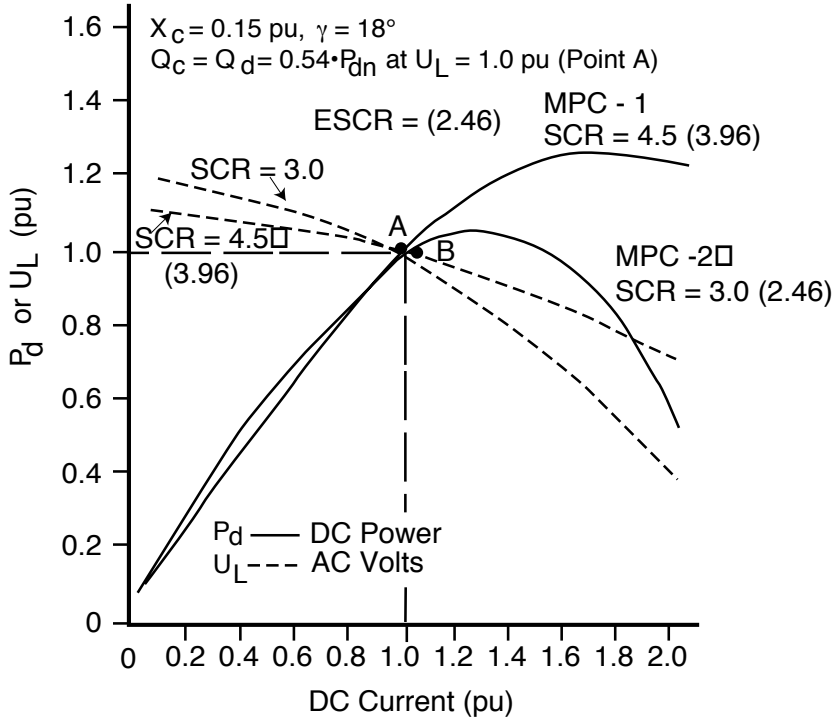


**Figure 3-3—AC/DC system—high SCR, sudden change of SCR from 4.5 to 3.0**

## 3.2 Power limits of an inverter

### 3.2.1 Power limits of an inverter connected to a high SCR ac system—with γ constant

The operating point of an inverter connected to an ac system having a high SCR, will be well below MAP; in Figure 3-3 an SCR = 4.5 has been assumed. In such cases, it is most economic to design the system so that the operating point is on the MPC for γ minimum. The operation at MPC is achieved while operating the inverter at a constant commutation margin having minimum γ value of, say, 15° (50 Hz), 18° (60 Hz). The dc voltage is maintained close to its rated value by the inverter transformer tap-changer

Operation at MPC (minimum γ) gives minimum cost due to the following factors:

— Minimum reactive power consumption
— Minimum ratings of valves, transformers, and shunt capacitors
— Minimum generation of harmonic currents
— Minimum losses

MPC can be suddenly reduced by a combination of the increase of the ac system impedance and of the reduction of terminal ac bus voltage, possibly due to a line trip in the ac system. Such a reduction of MPC is shown in Figure 3-3.


Copyright © 1997 IEEE. All rights reserved.
Copyright The Institute of Electrical and Electronics Engineers, Inc.
Provided by IHS under license with IEEE
No reproduction or networking permitted without license from IHS
Not for Resale

The pre-disturbance operation is with a system having SCR = 4.5. The operating point A corresponds to $P_d$, $U_L$, $U_d$, and $I_d$ having the rated values of 1.0 pu. The commutating reactance is 15%, the inverter reactive consumption $Q_{d\mathrm{N}} = 0.54 \cdot P_{d\mathrm{N}}$. The nominal rating of shunt capacitors (including filters), $Q_{c\mathrm{N}}$, is fixed and, at $U_L = 1$ pu, is equal to $Q_{d\mathrm{N}}$. Operation is at minimum constant γ.

If, following an ac line trip, as discussed in 2.2.4.1, while operating at point A, the system impedance is increased by one-third corresponding to the sudden reduction of SCR from 4.5 to 3, the operation will be according to MPC-2 of Figure 3-3.

MPC-2 is also a quasi-steady-state curve, but for the new ac system conditions.

Assuming constant-γ control at the inverter, a decrease in the inverter ac voltage causes an immediate decrease in dc voltage. Assuming for the present that the HVDC master control at the rectifier is for constant power (which is not always the case), then it will increase dc current to maintain power at the set value, unless the current-limit setting in the rectifier is reached. It is still assumed that AVRs, circuit breakers controlling shunt capacitors, etc., and on load tap-changes (OLTCs) have not operated, as they are slow compared to dc current controls. MAP-2 in this case is higher than the rated power $P_{d\mathrm{N}}$ and the power has been maintained at its predisturbance level, at the new operating point B.

For details of numerical values see 3.9.

### 3.2.2 Power limits of an inverter connected to a low SCR ac system with γ constant

There are a number of schemes in service with SCR having an approximate value of three or lower, but higher than SCR equal to two, with normal operating point at MPC with constant γ at rated currents smaller than $I_{\mathrm{MAP}}$ (see 3.6.2). However, the operation is sufficiently near MAP-1 that a sudden, but relatively moderate, change in the ac system voltage may result in a MAP-2 being lower than the rated power. This event is illustrated in Figure 3-4. A similar event, as shown in Figure 3-3, has been assumed, except that the system impedance prior to the line trip corresponds to SCR = 3, and after the line trip to SCR = 2. The required power cannot be maintained, but the current limit imposed by the rectifier prevents the collapse of the system, despite the demand for higher power from the master controller.

The operating point B on MPC-2 will be in the region where $dP_d/dI_d$ is negative and stable operation would not be achieved in power control mode, but stable operation continues in constant current control mode.

If the dc system is used to control ac frequency or to provide system damping, operation in the constant-current mode would not be acceptable except for a very brief period of time; e.g., while the fault is being cleared. Also, for these changes in ac system conditions, the power level may drop quickly to a lower value (determined by current limit) and also jump back to the original value if ac system conditions are suddenly restored. For possible steps to be taken to enhance performance in such cases, see 3.6.

For details of numerical values, see 3.9.

### 3.2.3 Power limit of an inverter connected to a very low SCR ac system with variable γ control

The operation at currents higher than $I_{\mathrm{MAP}}$ corresponds to operation at a point on the lower branch of a curve shown in Figure 3-2, which in ac transmission is considered the unstable part of the characteristics. In principle, it can be argued that it is the nature of the load that determines the stability. Assume that the load in Figure 3-1 is a static impedance load. If the impedance of the ac supply line is high, and if the inductive component of the load is high, the maximum power in Figure 3-2 would be relatively low and the operating point may be at the lower “unstable” part of the curve. An inverter connected to a high-impedance ac line operating at constant γ in the region where $dP_d/dI_d$ is negative will be unstable if its controls demand an increasing current to keep the power constant. But if the controls are arranged to keep the current constant, stability can be achieved. However, any variation of ac voltage would directly cause variation of power that would not be acceptable for most applications.

Copyright © 1997 IEEE. All rights reserved.

Copyright The Institute of Electrical and Electronics Engineers, Inc.
Provided by IHS under license with IEEE
No reproduction or networking permitted without license from IHS
Not for Resale

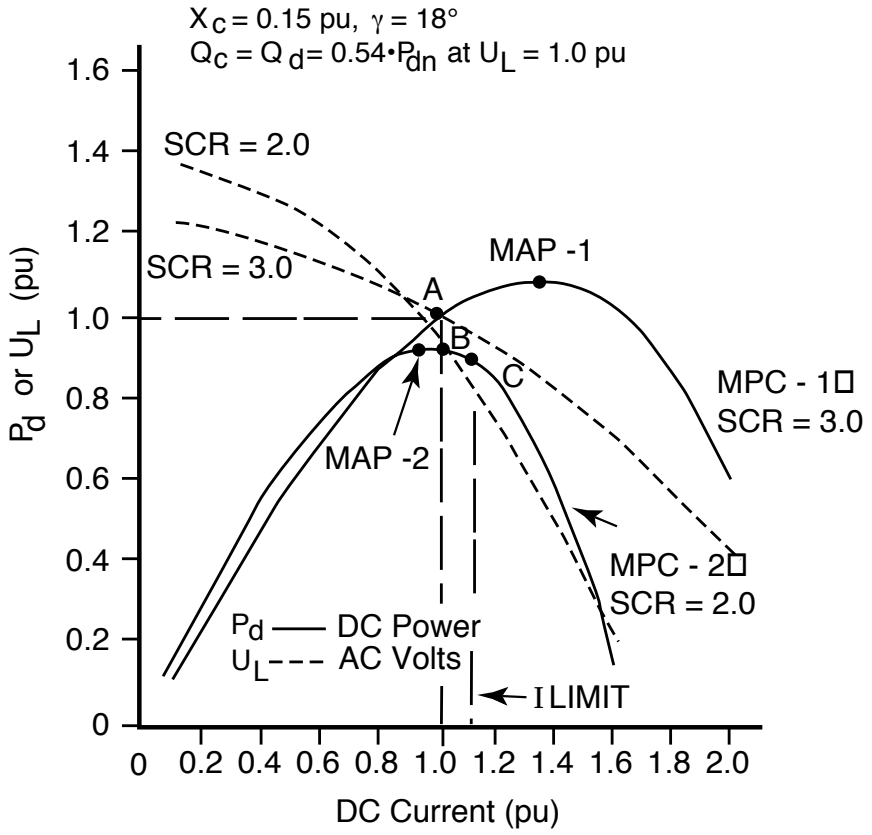


**Figure 3-4—AC/DC system—low SCR power and ac voltage curves, sudden change of SCR from 3.0 to 2.0**

An alternative control strategy, used in a number of schemes, is to control the dc voltage through inverter action by varying γ. The rectifier performs the same duty as in the previous case of controlling the dc current in order to achieve the desired power. An increase of γ increases var consumption and a decrease of γ reduces the var consumption. Therefore, in order to be able to increase ac voltage, as well as to reduce it, the inverter must be normally operating at a higher γ than the minimum.

Consider the four power curves in Figure 3-5. Normal operation is at point A with γ = 25°, curve MPC-1. Commutating reactance $X_c$ is 15%, as in the previous cases. The value of shunt capacitors is made equal to $Q_d$ at γ = 25° at $U_L$ = 1.0 pu. It should be noted that normal operation at currents smaller than 1.0 are not practical due to the high voltage as explained in 2.2.3 and by Figure 2-3. For example, MAP-1 occurs at $I_{MAP}$ = 0.75 pu, $U_L$ = 1.4 pu, and $U_d$ = 1.5 pu. Therefore, for normal operation with ac systems having very low SCR at dc currents higher than $I_{MAP}$, the power transfer limit is lower than the power corresponding to MAP. In the example in Figure 3-5, the maximum transmittable power, before ac system conditions are changed, is obtained by reducing γ to its minimum value. In this example, at the minimum γ = 18°, the point B is reached on MPC-2, which represents the maximum power that can be achieved from normal operating conditions by increasing current. The straight line O-A-B is the line of constant dc voltage. It should be noted that control of dc voltage, for operation with ac systems having very low SCRs, is not necessarily the only control strategy for operation at $I_d > I_{MAP}$. Controlling other quantities, such as ac voltage, reactive components of the inverter current, etc., could also be considered.


Copyright © 1997 IEEE. All rights reserved.
Copyright The Institute of Electrical and Electronics Engineers, Inc.
Provided by IHS under license with IEEE
No reproduction or networking permitted without license from IHS
Not for Resale

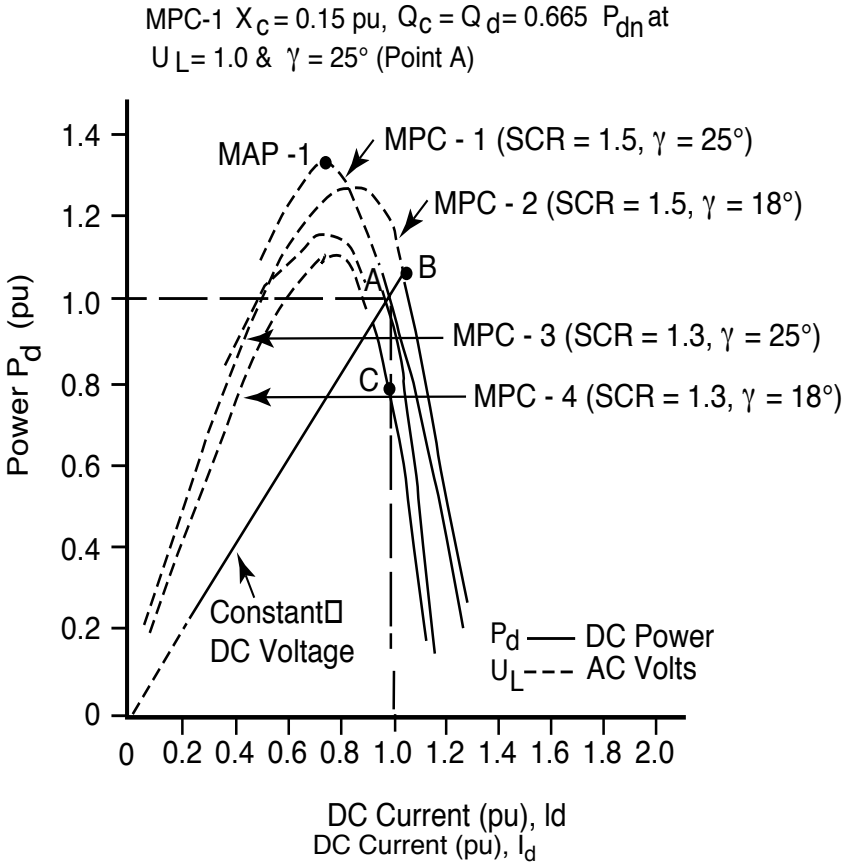


**Figure 3-5—AC/DC system—very low SCR, sudden change of SCR from 1.5 to 1.3**

Curve MPC-3 is obtained by assuming that an ac line has tripped, causing an increase in the system impedance by 13%. At $I_d$ = 1.0, before a change of γ value, this would result in reductions of $U_L$ to 0.81 pu, $U_d$ to 0.8 pu, and $P_d$ to 0.8 pu, point C on MPC-3. However, γ would instantly respond by reducing its value. In this example, this would result in restoring the power to 1 pu, with $U_L$ = 0.95, $\gamma_d$ = 1.0, and $I_d$ = 1.0, at minimum γ = 18°; i.e., point A on MPC-4.

The variable γ is maintained at its normal value, in the example considered at 25° by the inverter tap-changer and by shunt capacitor switching. For example, if the condition of MPC-4 persisted, additional shunt capacitors would be switched in order to increase the ac voltage and allow γ to return to a value near 25°. It must be stressed that, as in the previous cases, the controls must be stable during the period before capacitor switching in, for operation at γ minimum in the current control mode (at $dP_d/dQ < 0$).

The cost of the inverter designed for continuous operation at larger values of γ will be higher compared to the inverter designed for operation at minimum γ for the following reasons:

a) Reactive power consumption will be greater.
b) Valves, transformers, and shunt capacitors will have higher ratings.
c) Generation of ac and dc harmonics will be higher.
d) Convertor terminal losses will be higher.

Copyright © 1997 IEEE. All rights reserved.

Copyright The Institute of Electrical and Electronics Engineers, Inc.
Provided by IHS under license with IEEE
No reproduction or networking permitted without license from IHS
Not for Resale

The benefit of operating with variable γ is the ability to operate stably in the power control mode, for the design range of ac system variations, at dc currents larger than $I_{MAP}$, with ac systems having very low SCRs.

A further benefit is that, due to normal operation at γ larger than minimum, the probability of commutation failures would be reduced.

For details of numerical values, see 3.9.

### 3.2.4 Results from a transient stability program

As discussed in the previous subclauses, to determine the power limits of an inverter (or of a rectifier) "quasi-steady-state" power curves are used; i.e., each subsequent point is calculated by steady-state equations. These calculations are conveniently done by hand or, as in most cases of curves in this guide, by digital load-flow programs having adequate dc link representation. The statement that these quasi-steady-state curves give a good indication of dynamic performances was verified by using a transient stability program. The conditions of an inverter having data as used in the case of the power curve in Figure 3-4 for SCR = 3 has been used. The SCR of the rectifier was set to a very high value in order not to represent a limitation to the inverter performance. Results are shown in Figure 3-6. It should be noted that the particular controls used with this program allowed normal γ to reduce from 18° to an absolute minimum of 15°. Temporary reduction of γ allows a higher (short time) overload or maintenance of required power for a slightly greater voltage depression, at a risk of higher commutation failure probability. The power order was increased by 10% at time = 0.04 s. The current limit was set to a value of just over 1.3 pu in order to show the power increase to MAP and its subsequent reduction, despite the current increase. Soon after 0.1 s the current is reduced in response to ac voltage reduction, and so reduces the inverter var consumption. This is one of the methods used in practice to avoid ac voltage collapse. The analysis of the values of $I_d$, $U_d$, $P_d$, and γ indicates that these quantities are consistent with values achieved for Figure 3-4 for SCR = 3.

## 3.3 Power limits of a dc link

### 3.3.1 Introduction

In the preceding subclauses, the limits that an inverter may impose on the value of power transmitted were considered under the assumption that the rectifier operation will not be responsible for a lower limit. However, the rectifier is subject to the same limitations as the inverter; at increasing dc current the voltage will be reducing and the amount of control in hand depends on the value of α in normal operation. In this subclause, an example is given that takes into account both ends of the dc link. It has been assumed that the scheme is bidirectional and that the two ac systems have different values of SCRs. Either end may function as an inverter, but with differing operating strategies. Normal operation at γ = 19° (with absolute limit at γ = 15°) was assumed for the ac system having a low SCR value (system X) and a variable γ strategy was assumed to control dc voltage for the other end, which has a very low SCR value (system Y). The effect of a 5% ac voltage reduction on power transfer was calculated.

### 3.3.2 Example data

| | System X | System Y |
|---|---|---|
| ESCR | 2.75 | 1.0 |
| $X_c$ | 15% | 14% |

($\phi$ was assumed to be 90°, as the resistive component has only a small effect on power calculation.)

Table 3-1 gives initial conditions. Power is assumed positive for the system X to system Y direction and it is assumed negative (marked with a minus sign), for the opposite direction.


Copyright © 1997 IEEE. All rights reserved.
Copyright The Institute of Electrical and Electronics Engineers, Inc.
Provided by IHS under license with IEEE
No reproduction or networking permitted without license from IHS
Not for Resale

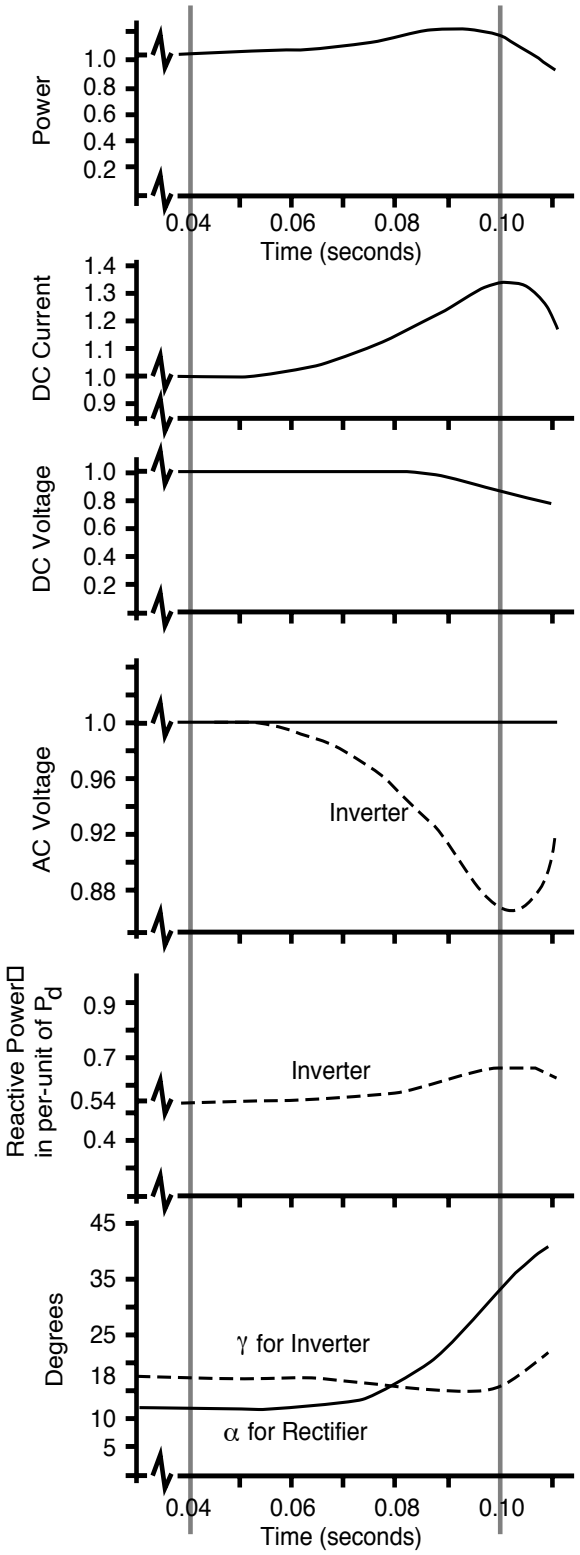


**Figure 3-6—Results of transient stability program for a 10% increase of power order, applies at 0.04 s, X = 0.15%, $Q_c = Q_d = 0.54P_d$, $\gamma = 18°$ at $U_L = 1.0$**

Copyright © 1997 IEEE. All rights reserved.

Copyright The Institute of Electrical and Electronics Engineers, Inc.
Provided by IHS under license with IEEE
No reproduction or networking permitted without license from IHS
Not for Resale

**Table 3-1—Initial conditions**

| DC system data | | | | | System emf | |
|---|---|---|---|---|---|---|
| **Case** | **$U_{dc}$ pu** | **$I_d$ pu** | **α (rectifier)** | **γ (inverter)** | **X** | **Y** |
| A | 1 | 1 | 12° | 25° | 1.047 | 1.169 |
| *B | –1 | 1 | 12° | 19° | 1.047 | 1.101 |

*Power from *Y* to *X*.

### 3.3.3 Application of the disturbance

Voltage changes are specified as "changes of 5% of the nominal bus voltage." It is therefore assumed here that the observed voltage change at the disturbed busbar is 5%, whatever the prime cause (e.g., a remote fault or loss of a line with negligible change in the value of the system impedance).

Table 3-2 summarizes the cases studied.

**Table 3-2—Summary of cases studied**

| Case ref. | Power flow | System voltage depressed 5% at |
|---|---|---|
| $A_1$ | X–Y | X |
| $A_2$ | X–Y | Y |
| $B_1$ | Y–X | X |
| $B_2$ | Y–X | Y |

### 3.3.4 Calculated solutions

Table 3-3 gives the calculated solutions. These are for the conditions after the convertor controls have settled (i.e., after about 100 ms) but before tap-changers or capacitors have switched. The "remote busbar" is the convertor busbar not subjected to the initial voltage depression.

**Table 3-3—Calculated solutions after voltage depression**

| Case | Power pu | AC voltage on the remote busbar | $U_{dc}$ pu | $I_d$ pu | α (rectifier) | γ (inverter) |
|---|---|---|---|---|---|---|
| $A_1$ | 0.970 | 0.990 | 0.970 | 1 | 3° | 26.7° |
| $A_2$ | 1 | 1 | 1 | 1 | 12° | 18.4° |
| *$B_1$ | 0.969 | 0.969 | –0.962 | 1.039 | 10.5° | 15° |
| *$B_2$ | 0.972 | 0.997 | –0.972 | 1 | 3° | 21.9° |

*Power from *Y* to *X*.



Copyright © 1997 IEEE. All rights reserved.
Copyright The Institute of Electrical and Electronics Engineers, Inc.
Provided by IHS under license with IEEE
No reproduction or networking permitted without license from IHS
Not for Resale

### 3.3.5 Comments on individual cases

For cases $A_1$ and $B_2$, the rectifier $\alpha$ reaches its minimum of 3° and the inverter takes over control of current (and power) by increasing its $\gamma$, which increases its reactive power consumption—hence reducing its ac bus-bar voltage.

For case $B_1$, a combination of the reduction of $\gamma$ to 15° and the increase of dc current to 1.039 pu successfully restores power to 1.0 pu.

Power is reduced by up to 3% for cases $A_1$ and $B_2$; otherwise, power control is maintained (except for a brief dip until the master control takes effect). This is because the master power control output (current order) reaches the sliding current limit (refer to 3.6.2.1), which, for a power order of 1 pu, limits dc current to 1.05 pu if the rectifier is still in control or to 1 pu if the inverter is in control.

The ac voltage on the "remote" busbar is only slightly depressed in all cases, with a maximum of 3.1% (case $B_1$).

The results in Table 3-3 are to some extent a compromise, because they depend on the values used for the current limits (1.05 and 1.0 as described above). For example, an increase in current limit by .05 pu for case $A_1$ would cause the power to be maintained at 1 pu (instead of 0.97 pu) but with a larger reduction of remote ac voltage—by 3.2% instead of 1%. In other cases, an increase in current limit would actually reduce power, with a further voltage depression, and would therefore be pointless.

In practice, the capacitor switching and tap-changer control would restore the desired conditions.

### 3.3.6 Rectifier connected to a very low SCR ac system

The main consideration in this guide is given to the conditions at the inverter of a dc link terminating at locations having low short-circuit capacity. However, particular attention must be given to the case in which the rectifier ac/dc system has a very low SCR.

In ac/dc systems having a very low SCR, it is essential to have fast control of the voltage. If the dc link itself is used to provide this fast control, the inverter is the voltage-controlling convertor. One common method is to control for constant dc voltage, which indirectly exerts a control on the ac voltage. In back-to-back systems, if the ac voltage at either end rises to a predetermined value, an ac voltage loop takes over to control ac voltage directly, operating through the inverter control system.

If there is a dc line between the rectifier and the inverter and the rectifier ac/dc system has a high SCR value and the inverter has a low or very low SCR value, the system will operate well, as the inverter controls dc and ac voltages local to the very low ac/dc system. However, if the rectifier ac/dc system has a very low SCR value, the inverter will not be very effective in quickly controlling the dc voltage at the rectifier end, and therefore its ac voltage (due to the inductance and the capacitance of the dc line), even if the telecommunication were to be very fast. There are examples of back-to-back schemes where both ac systems have low or very low SCRs. On the other hand, it is difficult to visualize a practical case where power would be supplied from a very low SCR ac/dc system over a transmission line. However, the application of a fast compensator at the rectifier ac system would enable operation even in such a case. Of course, there is always the option of strengthening the ac system (2.2.6).

Using only the inverter to provide fast voltage control in back-to-back schemes where both ac/dc systems have very low SCR values may have some limitations. If both ac systems exhibit frequent and fast ac voltage variations, inverter voltage control, coupled with automatic capacitor and inductor switching at the two ac bus-bars, may not always provide acceptable performance. In such cases, consideration should be given to improving the conditions of one of the two ac systems. This can be done by providing fast ac voltage control by an independent compensator (2.2.7.1) or by strengthening one of the ac systems (2.2.6).

Copyright © 1997 IEEE. All rights reserved.

Copyright The Institute of Electrical and Electronics Engineers, Inc.
Provided by IHS under license with IEEE
No reproduction or networking permitted without license from IHS
Not for Resale

## 3.4 Principal parameters

For ac/dc systems having low and very low SCRs, the ac voltage stability at the terminals of the convertor station has to be fully analyzed and studied. Such a phenomenon can be responsible for the ac voltage excursions during steady-state as well as dynamic operation of the dc scheme. Fault recovery performance, temporary overvoltages, and overall ac/dc system transients and dynamic stabilities are also closely tied to the ac voltage stability phenomenon.

The solution(s) adopted to alleviate such a problem stem from the following parameters, which directly influence the severity of such a phenomenon:

a) AC system impedance (fundamental frequency)
b) Rated dc power
c) Rated reactive power (which depends on commutating reactance and on $\alpha$ and $\gamma$)
d) Range of acceptable ac voltage regulation
e) Level of var compensation
f) DC control strategy

For a given system impedance and other system parameters shown in Figure 2-1, there will be a unique $P_d/I_d$ characteristic for operation at $\gamma$ minimum (constant), which will represent the maximum power curve.

## 3.5 Trends and sensitivities of system parameters

### 3.5.1 AC system impedance

The closer that the system impedance approaches that corresponding to the CSCR, the greater the probability that the operation may take place at currents larger than the $I_{MAP}$.

The curves of constant MAP have been drawn in Figure 3-7 [see B11[4]] for different values of system admittances and for three different values of ac terminal voltage. For a system impedance having the angle $\phi = 90°$, ESCR has the numerical value of the susceptance B, and for a system impedance having the angle $\phi = 0°$, ESCR has the numerical value of the conductance G. It can be seen that the value of MAP, and therefore of CSCR, does not vary much for system impedance angles in the practical range of, say, $\phi = 70°$ to $\phi = 85°$, which means that the simpler Equation (9) given in 2.5 can be normally used.

The variation of the terminal ac voltage was achieved by varying the emf behind the ac system impedance without varying the value of impedance, in order to indicate the effect of ac voltage on MAP. In practice, a disturbance, such as an ac line trip, would result in a change of both impedance and terminal voltage values.

### 3.5.2 Convertor reactive power consumption

It was shown in Clause 2 that QESCR gives a better indication of ac/dc system operation, because it takes into account the convertor reactive power consumption ($Q_d$). The values of CSCR and CESCR will be higher for higher values of $Q_d$. This means that the higher the $Q_d$, the lower the value of MAP, and hence of power transfer for the same values of SCR and ESCR. A value of QESCR equal to about 0.95 indicates that the operation is near MAP (see 2.4).

[4]The numbers in brackets correspond to those of the bibliography in Annex B of Part I.


Copyright © 1997 IEEE. All rights reserved.
Copyright The Institute of Electrical and Electronics Engineers, Inc.
Provided by IHS under license with IEEE
No reproduction or networking permitted without license from IHS
Not for Resale

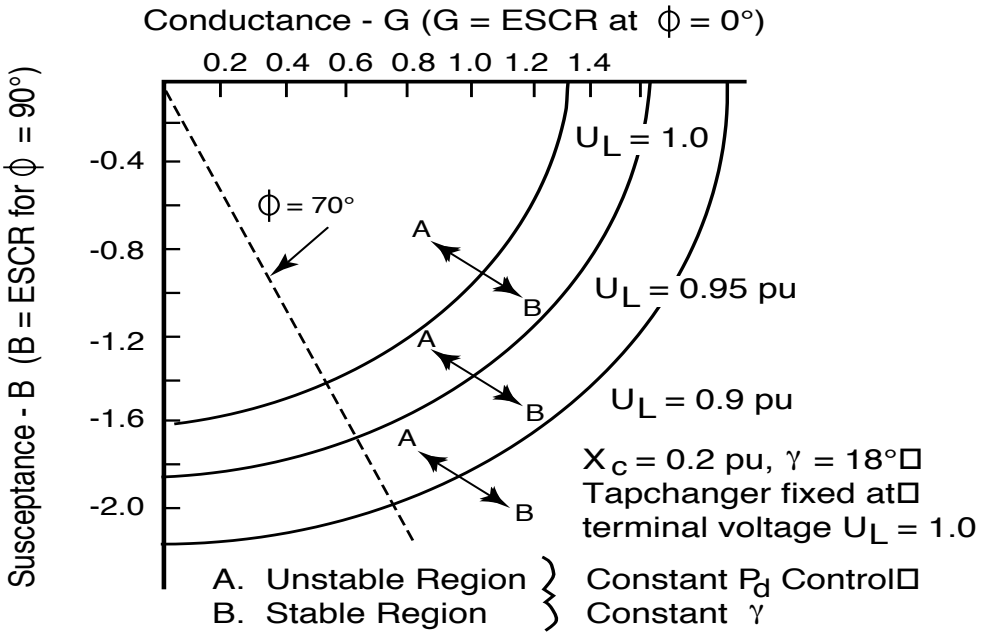


**Figure 3-7—Curves for constant MAP for different ac systems admittance: G (effective conductance) and B (effective susceptance) in per unit of $P_d$**

## 3.6 Possible improvements

### 3.6.1 Reducing the ac system impedance

The desired performance can always be achieved by increasing SCR; i.e., by reducing the ac system impedance. This can be done by finding a more suitable connecting point in the receiving ac system or by adding an ac line. The former may not be possible to achieve and the latter may be uneconomical.

Another method employed in practice has been to use a synchronous compensator at the inverter station as discussed in 2.2.6.

### 3.6.2 Control improvements for normal operation with $I_d < I_{MAP}$

In 2.2.4.2 and 3.2.2 it was pointed out that, due to ac system changes like line outages, the resultant MAP value may be smaller than the required power, and stable operation can continue only in a constant-current control mode at reduced power levels.

The following control action can be taken to minimize these disadvantages.

#### 3.6.2.1 Sliding current limit

The use of a sliding current limit set at say 0.05 pu above the per unit power order prevents large uncontrolled changes in power due to sudden ac voltage changes, as could be found in the case of a fixed 1.1 pu current limit used in many schemes. The use of a sliding current limit is of particular importance for operation at lower values of power. In Figure 3-8, it is assumed that the operation is at 0.5 pu of power at $I_d = 0.5$ pu at an increased ac system impedance, but having a value of SCR (i.e., OSCR), equivalent to the SCR = 3 of Figure 3-4. In this case, a sudden increase of system impedance, due for example to a line trip, would result in a reduction of MAP below the required 0.5 pu. A current limit of 1.1 pu or 1.05 pu could cause the collapse of the voltage

Copyright © 1997 IEEE. All rights reserved.

Copyright The Institute of Electrical and Electronics Engineers, Inc.
Provided by IHS under license with IEEE
No reproduction or networking permitted without license from IHS
Not for Resale

and hence power transmission. However, a sliding current limit set at 0.05 pu of power order, in the example of Figure 3-8, $I_{Limit} = 0.55$ pu, would allow transmission to continue at only a slightly lower power level until ac voltage is corrected by, for example, capacitor switching.

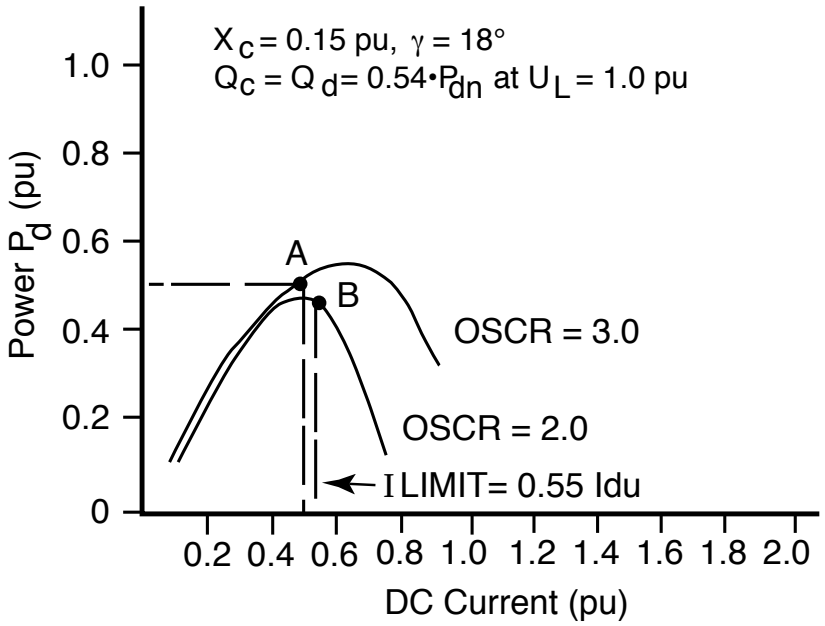


**Figure 3-8—Operation at reduced load sliding current limit**

### 3.6.2.2 Temporary reduction of power order

The power order can be automatically reduced for ac voltage reductions below a preset limit, so that the actual power is always some percentage smaller than MAP. In that way, the power will continue to be controlled in coordination with ordered current changes.

The time during which the power level is lower than required can be minimized by having available shunt capacitor banks that can be automatically switched to restore the ac voltage. This will be effective, as the voltage stability factor (VSF) is positive in current control.

There are a number of schemes where the operating point is sufficiently near the MAP, so that a relatively moderate, sudden ac voltage reduction may result in MAP-2 being lower than the power being transmitted.

The Itaipu scheme is designed to operate at CESCR of approximately 1.5; so far, the minimum OESCR in service was 1.8 (the worst case studied was for ESCR = 1.55, $X_c = 18\%$, $\gamma = 17°$, and $Q_c = 0.6P$). The power control system has a slow voltage feedback. The time constant is chosen to match the speed of response of the synchronous compensator voltage control systems (500 ms). For large voltage decreases, a changeover to constant current control for a preset time takes place. A moderate voltage reduction in the inverter ac network may lead to a commutation failure that will activate the constant current mode. The recovery will, as in most other schemes, take place in constant current control mode.

In the Nelson River scheme (minimum ESCR = 2.51, $\phi = -75°$, $\gamma = 18°$, $X_c = 20\%$, $Q_c = 0.6P$) for reduced ac voltage to 0.95 pu, operation is changed from purely constant power by replacing measured voltage, in the master control circuit, by a fixed dc voltage in order to prevent increasing current order with reduced voltage. It is released at 1.0 pu ac voltage. A damping capability, required by the ac system from the dc, is maintained, as is the important function of dc power reduction for tie-line trips.


Copyright © 1997 IEEE. All rights reserved.
Copyright The Institute of Electrical and Electronics Engineers, Inc.
Provided by IHS under license with IEEE
No reproduction or networking permitted without license from IHS
Not for Resale

#### 3.6.2.3 Operation with an increased γ

If the normal operation is very near MAP, so that excursions beyond MAP may be unacceptably frequent, it may be economical to design the inverter for normal operation at a γ slightly larger than the minimum, in order to provide some margin to deal with frequent ac voltage changes.

### 3.6.3 Normal operation with $I_{DC} > I_{MAP}$—application of TCR or SR with constant γ

If sufficiently fast control of the inverter ac busbar voltage is provided by a SR or TCR, the power control mode of operation required for system stabilization and frequency control would be stable, because ac voltage could be controlled faster than the voltage feedback that determines $I_{order}$. Static compensators are already used in service at the inverter terminals to control overvoltages (e.g., Cross Channel, Chateauguay).

Additional shunt capacitors would be required to compensate for SVC reactive consumption in normal operation and there would be a requirement for switching additional capacitor banks to keep the SVC in range.

The application of an SVC in this way should be considered for existing schemes where, due to ac system changes, the operation at $I_d > I_{MAP}$ may result and the existing dc equipment is not rated for operation at larger γ. For new schemes, it is likely to be more economical to design the equipment for operation at variable γ.

A synchronous compensator could be used in the same way as described above for SVC, provided the control of ac busbar voltage is faster than the required power control speed; i.e., the voltage feedback that determines $I_{order}$. However, it should be noted that in all schemes that are in service where a synchronous compensator is used, the ac system was sufficiently strengthened that the normal operating point is on the left side of MAP ($I_d < I_{MAP}$).

## 3.7 Influence of dc controls

As indicated previously, the control mode employed is very important. The importance of the quality of the controls cannot be overstated. Controls are discussed in Clause 4.

## 3.8 Methods of study

### 3.8.1 Hand calculation

For preliminary consideration CSCR, MAP, power reduction due to ac voltage reductions, etc., can be calculated by hand (or using simple digital programs) using steady-state equations. This can be done initially by taking just the inverter into consideration. Similar calculations can be carried out by taking into consideration the combined operation of the rectifier and the inverter.

### 3.8.2 Digital system programs

Good load flow and transient stability programs will provide correct results.

### 3.8.3 DC simulator

A dc simulator is normally used for more detailed studies required for design and stability criteria of control circuits. Additional information is provided in Clause 7 and also in Part II, Clause 5.

Copyright © 1997 IEEE. All rights reserved.

Copyright The Institute of Electrical and Electronics Engineers, Inc.
Provided by IHS under license with IEEE
No reproduction or networking permitted without license from IHS
Not for Resale

## 3.9 Discussion of power curves

### 3.9.1 AC/DC system having high SCR—Figure 3-3

See Figure 3-3 for an ac/dc system having a high SCR.

| | $I_d$ | $U_L$ | $U_d$ | $P_d$ | $X_c$ | γ | SCR |
|---|---|---|---|---|---|---|---|
| Initial conditions point A on MPC-1 | 1.0 | 1.0 | 1.0 | 1.0 | 15% | 18° | 4.5 |
| Possible immediate overload at MAP-1 | 1.74 | 0.83 | 0.73 | 1.28 | 15% | 18° | 4.5 |
| Conditions following a line trip before current increase—new initial conditions, point B on MPC-2 | 1.0 | 0.984 | 0.983 | 0.983 | 15% | 18° | 3.0 |
| Restored conditions | 1.04 | 0.98 | 0.929 | 1.0 | 15% | 18° | 3.0 |
| Possible immediate overload at MAP-2 | 1.3 | 0.85 | 0.814 | 1.06 | 15% | 18° | 3.0 |

Higher power values ($P_d$) than those indicated above could be obtained only if the ac voltage applied to the inverter is increased.

### 3.9.2 AC/DC system having low SCR—Figure 3-4

The conditions in Figure 3-4 are as follows:

Initial conditions, point A at MPC-1

| $I_d$ | $U_L$ | $U_d$ | $P_d$ | γ | $X_c$ | SCR |
|---|---|---|---|---|---|---|
| 1.0 | 1.0 | 1.0 | 1.0 | 18° | 15% | 3 |

Possible immediate overload to MAP-1

| $I_d$ | $U_L$ | $U_d$ | $P_d$ | γ | $X_c$ | SCR |
|---|---|---|---|---|---|---|
| 1.32 | 0.87 | 0.83 | 1.08 | 18° | 15% | 3 |

Conditions following a line trip before current increase—new initial conditions, point B on MPC-2

| $I_d$ | $U_L$ | $U_d$ | $P_d$ | γ | $X_c$ | SCR |
|---|---|---|---|---|---|---|
| 1.0 | 0.93 | 0.92 | 0.92 | 18° | 15% | 2 |

However, the current would immediately increase up to the current limit, point C on MPC-2

| $I_d$ | $U_L$ | $U_d$ | $P_d$ | γ | $X_c$ | SCR |
|---|---|---|---|---|---|---|
| 1.1 | 0.84 | 0.81 | 0.9 | 18° | 15% | 2 |

Conditions at MAP-2

| $I_d$ | $U_L$ | $U_d$ | $P_d$ | γ | $X_c$ | SCR |
|---|---|---|---|---|---|---|
| 0.96 | 0.96 | 0.96 | 0.93 | 18° | 15% | 2 |


Copyright © 1997 IEEE. All rights reserved.
Copyright The Institute of Electrical and Electronics Engineers, Inc.
Provided by IHS under license with IEEE
No reproduction or networking permitted without license from IHS
Not for Resale

Higher power values can be obtained only if the ac voltage applied to the inverter is increased.

### 3.9.3 AC/DC system having very low SCR—Figure 3-5

See Figure 3-5 for the ac/dc system having a very low SCR.

Initial conditions, point A at MPC-1

| $I_d$ | $U_L$ | $U_d$ | $P_d$ | γ | $X_c$ | SCR |
|---|---|---|---|---|---|---|
| 1.0 | 1.0 | 1.0 | 1.0 | 25° | 15% | 1.5 |

Possible immediate overload, point B on MAP-2

| $I_d$ | $U_L$ | $U_d$ | $P_d$ | γ | $X_c$ | SCR |
|---|---|---|---|---|---|---|
| 1.07 | 0.96 | 1.0 | 1.07 | 18° | 15% | 1.5 |

Conditions following a line trip before reduction of γ, point C on MPC-3

| $I_d$ | $U_L$ | $U_d$ | $P_d$ | γ | $X_c$ | SCR |
|---|---|---|---|---|---|---|
| 1.0 | 0.81 | 0.8 | 0.8 | 25° | 15% | 1.3 |

However, γ would immediately reduce to its minimum, point A on MPC-4

| $I_d$ | $U_L$ | $U_d$ | $P_d$ | γ | $X_c$ | SCR |
|---|---|---|---|---|---|---|
| 1.0 | 0.95 | 1.0 | 1.0 | 18° | 15% | 1.3 |

Higher values can be obtained only if the ac voltage applied to the inverter is increased.

### 3.9.4 Discussion of results

It should be noted that the above results are obtained for the specified inverter and ac system data and apply just to this example. Also, it should be remembered that only the inverter characteristics were considered; i.e., any restrictions that a practical rectifier may impose on power transmitted were ignored. However, the examples do serve to indicate the possible performance with ac/dc systems of different SCR values.

High and low SCR systems will allow an immediate overload up to the value of MAP; i.e., even without ac voltage control, provided that there are no other limitations, such as inadequate output from the rectifier or by equipment rating. The higher the SCR of the system, the higher the value of the immediate overload. The low SCR system cannot maintain the power at the level being transmitted, following the assumed ac system disturbance; a current limit would allow the transmission to continue at a reduced power level.

The amount of immediate overload when operating with very low SCR systems depends on the design rating corresponding to the nominal value of γ. In the particular example of Figure 3-5, the normal operation at $\gamma = 25°$ allows an immediate overload of 1.07 pu and just permits a system disturbance that increases the ac system impedance by 15% without loss of power.

Satisfactory operation with very low SCR systems depends on good ac voltage control to maintain γ near its nominal value and to keep ac voltage within prescribed limits despite steep voltage changes, due to dc current variation.

It should be also noted that the large sudden system changes assumed in these examples may cause, in practice, a commutation failure, which is discussed in Clause 10.

Copyright © 1997 IEEE. All rights reserved.

Copyright The Institute of Electrical and Electronics Engineers, Inc.
Provided by IHS under license with IEEE
No reproduction or networking permitted without license from IHS
Not for Resale

# 4. Control and protection for dc transmission

## 4.1 Introduction

Controls are involved to a greater or lesser extent in most phenomena of interactions between ac and dc systems. The control system is of immediate importance for stability and performance during disturbances. Special control functions can be added to improve, in many cases, the behavior of the total transmission system.

If the convertor stations are connected to a high SCR system (i.e., has low impedance), the control system design is straightforward and a high speed of response can be achieved in most cases. The exception to this would be the schemes having long dc cables or very long transmission lines. With low and very low SCR ac systems, on the other hand, stabilization of the dc controls requires more care and it may be necessary to accept that recoveries from ac system faults are slower than if the ac network were strong.

## 4.2 Hierarchical division of the dc control system

### 4.2.1 Introduction

Several control levels can be found in a dc scheme since an ac/dc system itself can be considered as divided into different hierarchical levels. Power dispatch, system frequency, ac voltage, machine signals, etc., constitute the constraints of the ac "world" that should be correctly treated in a coordinated manner by the relevant control levels, in order to provide a stable ac/dc interconnection.

The magnitude of time constants is different for each control level. The shortest time constant is related to valve electronics. Time constants increase in value (and frequencies of concern become lower) as the controls move closer to the ac system. Figure 4-1 indicates the various levels and typical time constants associated with each control level.

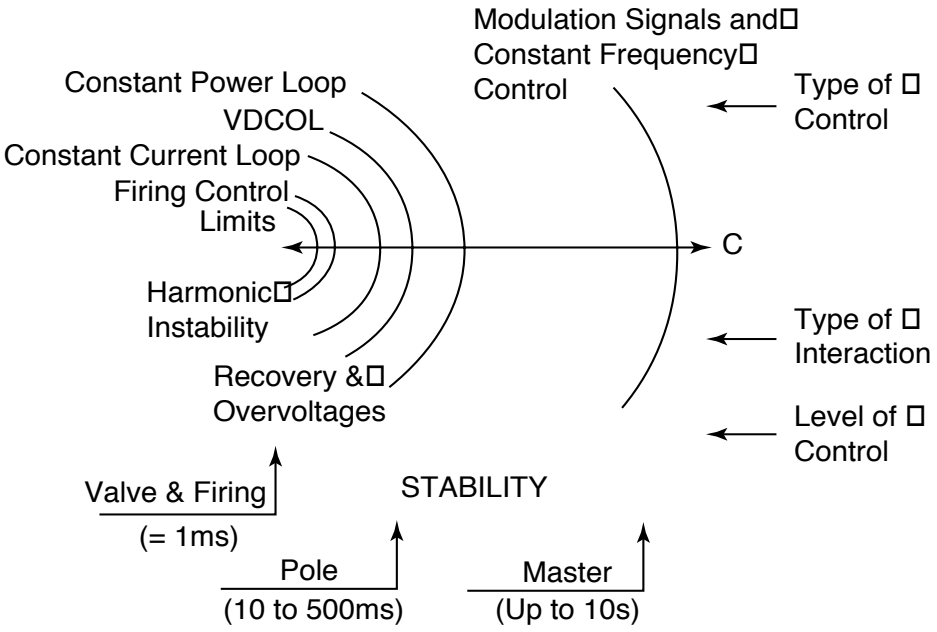


**Figure 4-1—Hierarchical levels of HVDC controls with typical time constant**


Copyright © 1997 IEEE. All rights reserved.
Copyright The Institute of Electrical and Electronics Engineers, Inc.
Provided by IHS under license with IEEE
No reproduction or networking permitted without license from IHS
Not for Resale

### 4.2.2 Thyristor and valve control level

The lowest hierarchical level in the control system is the valve and thyristor control equipment. This covers the electronic equipment used for transmission of control pulses to the valve for the firing of the individual thyristors, and for supervision and monitoring of valve status. A simplified block diagram is given in Figure 4-2. The thyristor control units (TCUs) communicate with the valve control system and convert received firing pulses, normally light pulses transmitted by fiber-optic light guides, into current pulses applied to the thyristor gates. Return channels from the TCUs to the valve control system are often used for thyristor supervision.

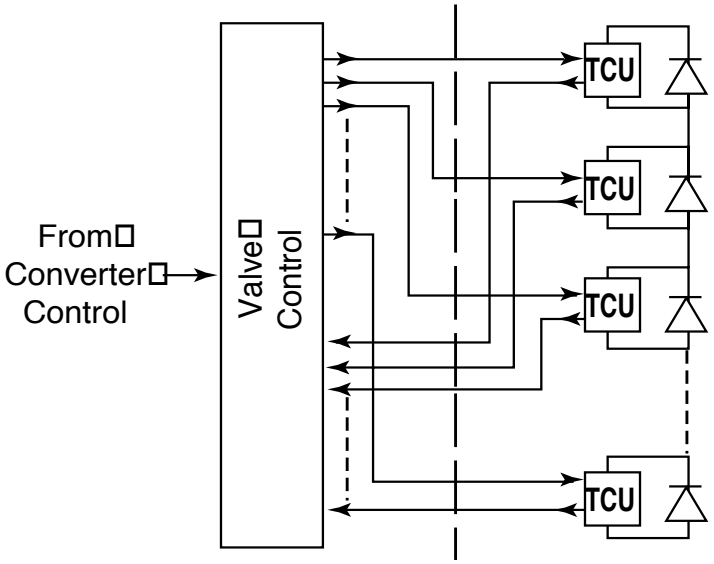


**Figure 4-2—The thyristor and valve control levels in the control hierarchy**

### 4.2.3 Convertor and basic control level

The convertor control level consists of the convertor firing control. This subsystem determines the firing instants for all valves of the convertor. The firing control system can operate in one of several modes. The principal modes are as follows:

a) Minimum alpha control and minimum commutation margin control, which define limits of convertor control and must always be able to override other modes of control
b) Direct current control
c) Direct voltage control

Direct current and direct voltage modes of control are used to execute the requirements of higher level control loops that control system quantities such as transmission power and reactive power consumption.

In current control, which is the normal rectifier mode of operation, the delay angle alpha is determined by a control signal from a current controller that is used to control the current in the dc circuit.

### 4.2.4 Pole control level

The current control amplifier (CCA) is found in the pole control level, which is next in the hierarchy. When two or more convertor groups are connected in series in the same pole they must carry the same direct current, and therefore must be served by a common control amplifier. Most dc systems operate under the current margin method, which will be discussed later. One of the principles involved in this method is that both rectifier

Copyright © 1997 IEEE. All rights reserved.

Copyright The Institute of Electrical and Electronics Engineers, Inc.
Provided by IHS under license with IEEE
No reproduction or networking permitted without license from IHS
Not for Resale

and inverter are provided with a current controller, but the controller in only one of the stations is active. The controller in the inverter station is normally made "inactive" by making its current order smaller than the order in the rectifier station. However, the status of the two controllers can be dynamically changed during and after disturbances. The convertor and the basic pole control levels are illustrated in Figure 4-3, in which CFC1 and CFC2 indicate convertor firing control systems for two 12-pulse convertors in the pole. CCA is the current control amplifier and COL is the current order limiter (see 4.6).

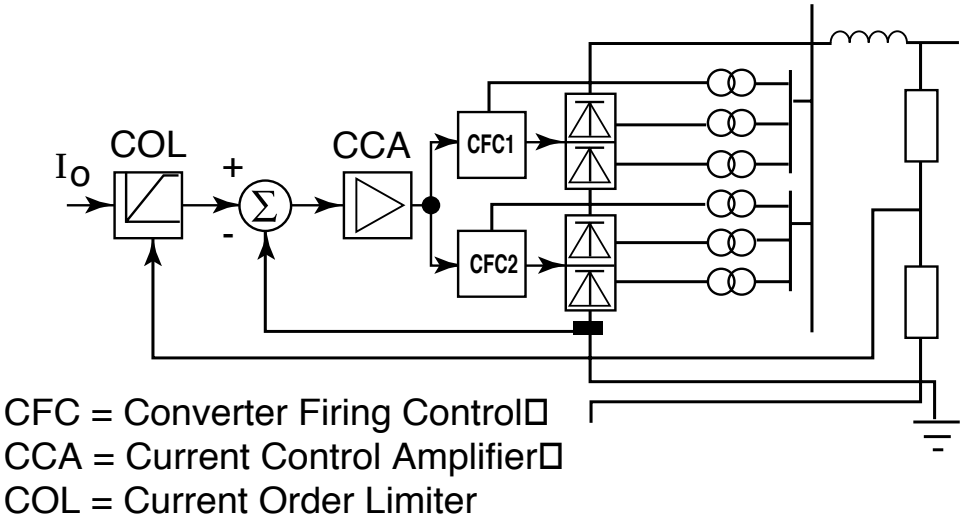


**Figure 4-3—Convertor and basic control levels in the control hierarchy**

The control functions considered so far represent the basic control system needed to operate a dc system. This part of the control system is normally not designed for a specific project, but parameter values and some special functions are changed to suit a particular system.

### 4.2.5 Pole master control level

The next level in the hierarchy is the pole master control level shown in Figure 4-4. Master control functions can also be found on the bipole level, but it is often considered sound design philosophy to refer as many of the master control functions to the pole level as possible, which is advantageous from the availability point of view. The pole master control (PMC) equipment normally includes such functions as power control (which determines the current order), current order transmission between stations, and current order limitation for overload control. Also, power order ramping and power modulation for ac network stabilization may be performed by the pole master controller.

### 4.2.6 Bipole control level

Control functions on the bipole level should be avoided as far as possible. However, some functions related to total transmission power must be situated in the bipole level control. The integrating frequency controller intended for constant frequency control of a receiving island network is usually common to the two poles of a bipolar transmission scheme. Also, a reactive power controller, which switches shunt banks and filters and which generates orders to change control angles, is preferably a bipolar control function.

In addition to control functions, as discussed above, protective and sequence control functions are also found on each of the hierarchical levels with segregation to lowest possible level. For example, protection on the bipole level (e.g., protection that can trip the whole bipole) should be avoided for availability reasons.


Copyright © 1997 IEEE. All rights reserved.
Copyright The Institute of Electrical and Electronics Engineers, Inc.
Provided by IHS under license with IEEE
No reproduction or networking permitted without license from IHS
Not for Resale

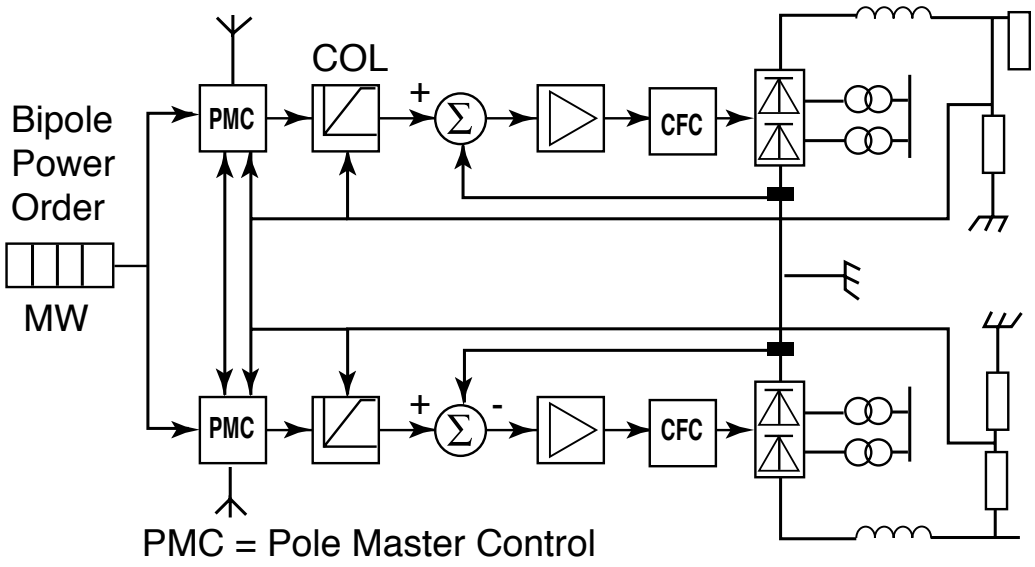


**Figure 4-4—Pole master control in a bipolar transmission**

## 4.3 Types of interaction between controls and the ac system

### 4.3.1 Introduction

The control systems for a dc transmission must be stable with adequate stability margins in the whole range of operation.

It is easier to achieve control system stability and fast response when the ac network has a large SCR value than when it has a low or very low SCR. For instance, it may be impossible to achieve a fast power control system if the receiving ac network has a very low SCR. This problem can sometimes be solved by slowing down the direct voltage signal fed back to the power controller to allow the ac system voltage control to act before the current order is significantly changed. This can reduce the influence of the ac voltage variations.

With line-commutated convertors, which are used for dc systems, the commutation process depends on the ac voltage waveform, and therefore the commutating voltage is the main interface parameter between ac and dc systems.

### 4.3.2 Firing of thyristors

#### 4.3.2.1 Thyristor firing voltage and the availability of gating pulses

Two conditions are required simultaneously for the thyristor to start conducting: A positive voltage applied across the thyristor must be larger than a given minimum and a positive current must be injected to the thyristor gate. Sufficient voltage is made available by limiting the minimum alpha to a value of, say, 2° to 5°. The firing signal transmitted from ground potential is used to release the current pulse, which is generated at the individual thyristor level.

The energy for the firing pulse derives from capacitors at the thyristor levels, charged by the ac voltage applied across the valve. It is important to be able to adequately charge these capacitors, even if ac voltage has a low value for a prolonged period of time. It is particularly important for systems where dc represents a large proportion of power infeed to be able to recover quickly from an ac or dc system fault, in order to prevent the collapse of the ac system. It is also important to transmit as much power as possible during system

Copyright © 1997 IEEE. All rights reserved.

Copyright The Institute of Electrical and Electronics Engineers, Inc.
Provided by IHS under license with IEEE
No reproduction or networking permitted without license from IHS
Not for Resale

faults when ac voltage may be low. This can be done only if the ability to provide energy for the firing pulses is not lost during the disturbance. In practice, other factors may impose a minimum ac voltage for convertor operation.

#### 4.3.2.2 Thyristor refiring

A valve should be able to refire during the conduction interval defined by the firing control system, after a current extinction due to, for example, a brief ac voltage reduction to zero as a consequence of an ac system fault. This requirement is not as obvious as it may seem, because modern valve control systems are based on the principle of firing the valve by transmitting one or a small number of short pulses to the valve at the beginning of the conduction interval. Thus, the requirement of refiring at current extinction means that the valve control system must be designed to generate and transmit new firing pulses when the voltage builds up across the valve during the conduction interval, e.g., during the period that a valve would normally conduct. This matter can also be handled by the thyristor control unit if start and stop pulses are received from the valve control system.

If the valves are able to refire at current extinction, the dc system can operate with very low currents (below the limit for continuous current operation), and can be used to form a very low load to a generator station in radial operation with the dc link during the startup of the generators. This property of the dc system is also important when the transmission system is used for the infeed of power to an island network if the dc transmission is used for acceleration of the synchronous compensator from a low frequency to rated frequency as is the case in the Gotland transmission (see Clause 9).

### 4.3.3 Interactions with the firing controls

#### 4.3.3.1 Individual-phase firing control

The individual-phase control system applies a method of firing pulse generation directly synchronized to the ac voltage waveform. It also creates an unintentional feedback loop from this waveform via delay angle determination, phase current variation, ac voltage fluctuation, and thence back to the voltage waveform.

This is illustrated in Figure 4-5, in which the quantities involved in the feedback loop are denoted as superimposed disturbances; i.e., delta alpha (for variations in delay angle), delta $I_{ph}$ (phase current), delta $U_{AC}$ (phase voltage), and delta $U_{cf}$ (control function). Here $U_{cf}$ is a control function derived from the ac bus voltage and is used for direct determination of the phase position for firing; i.e., the delay angle. It should be noted that even if the direct current, $I_d$ in the figure, is ideally smoothed, a disturbance in alpha will cause disturbances in phase currents. The most important parameters for the loop gain are the equivalent network impedance $Z_n$ and the value of the direct current. A higher $Z_n$ (i.e., a weaker ac network) and a higher direct current result in a higher loop gain and a higher risk for instability.

#### 4.3.3.2 Equidistant, or phase-locked oscillator, firing control systems

The harmonic instability phenomenon was one of the main reasons for developing the equidistant firing control system or, using another name, the phase-locked oscillator control system, used in all modern dc schemes. It should be noted that an equidistant firing control system does not give equal distances between firings in all situations, not even in steady-state operation. Exact equidistant firing is obtained only in steady-state operation with completely balanced commutation voltages. The name “equidistant firing control” refers to the fact that each firing is fixed in time with reference to the previous firing and not to the previous zero crossing of the commutation voltage, which is the case in the individual-phase control system. The equidistant type of firing control system does not rely on a control function derived from the ac voltage but is only indirectly synchronized to the ac voltage by the current feedback, and accordingly the unintentional feedback loop discussed in 4.3.3.1 is broken.


Copyright © 1997 IEEE. All rights reserved.
Copyright The Institute of Electrical and Electronics Engineers, Inc.
Provided by IHS under license with IEEE
No reproduction or networking permitted without license from IHS
Not for Resale

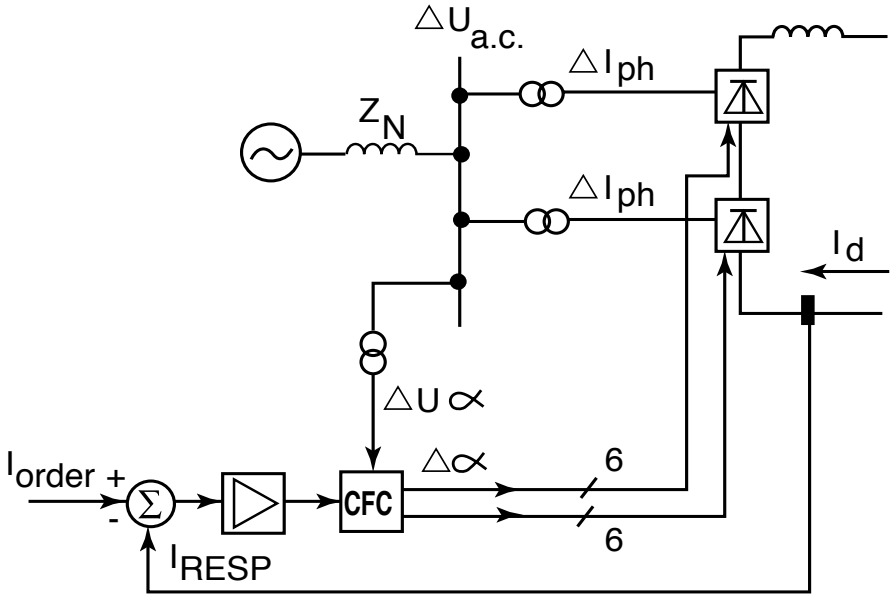


**Figure 4-5—Current control with individual-phase firing control system**

As shown in Figure 4-6, the basic element in an equidistant firing control system operating in current control mode is a voltage-controlled oscillator (VCO), the output pulse signal of which in steady state ($I_{order} = I_{resp}$) has a frequency equal to the pulse number for the convertor multiplied by the ac system frequency. The control pulse generator separates the pulse signal into one signal per valve. As soon as a deviation occurs between current order and current response, the frequency of the VCO will change temporarily. Steady-state operation will be restored, with a new or the predisturbance value at the delay angle $\alpha$, following a transient delay. Using this type of firing control allows stable operation with a weak rectifier ac network.

#### 4.3.3.3 Commutation margin angle control for inverters

The inverter must always be provided with a firing control function which, as far as possible, guarantees that firing does not take place later than at the instant which would result in a minimum commutation margin.

Two techniques have often been utilized for the inverter firing control: $\gamma$ predictive and $\gamma$ feedback. In the $\gamma$ predictive approach, the firing pulses are ordered according to a calculation of predicted voltage-time area for commutation and extinction. The other approach executes the firing pulses according to the difference between a $\gamma$ order and a measured value of $\gamma$. Predictive inverter firing is, by nature, individual per valve or phase, but can be provided with a balancing circuit to attain equidistant firing and stable operation when feeding a weak ac network.

## 4.4 Current control

The design of the direct current control system is determined by main circuit parameters; e.g., the inductance of the dc reactor, the characteristics of the dc line, and the impedances of the ac networks and of the convertor transformer. The impedance of the receiving ac system is the most important parameter. Thus, the characteristic of the inverter considered as a load to the rectifier is dependent on characteristics of the inverter ac network.

Copyright © 1997 IEEE. All rights reserved.

Copyright The Institute of Electrical and Electronics Engineers, Inc.
Provided by IHS under license with IEEE
No reproduction or networking permitted without license from IHS
Not for Resale

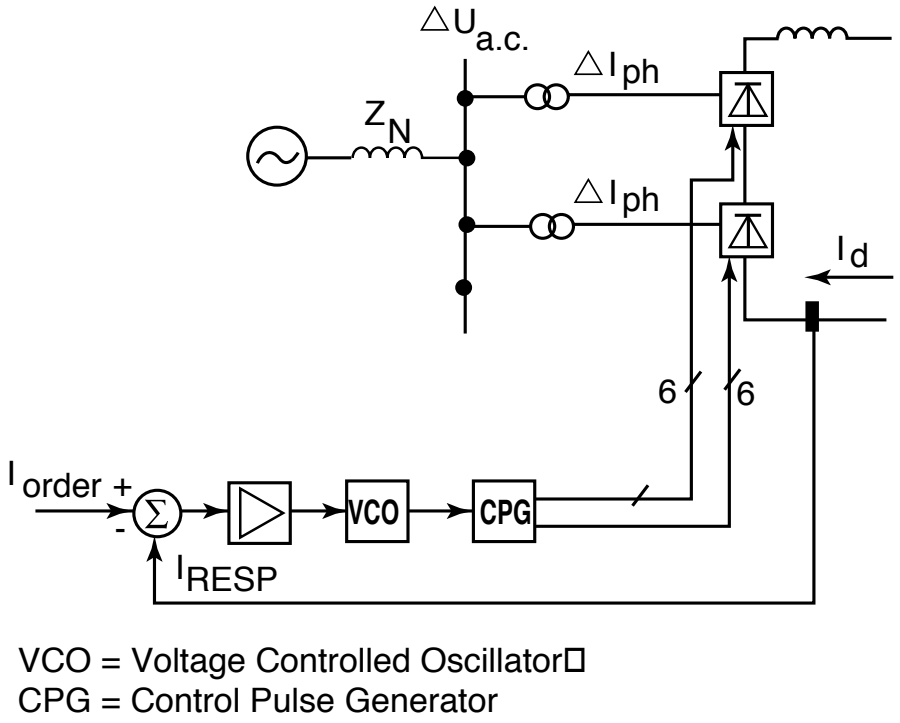


**Figure 4-6—Current control with equidistant firing control system**

Typical natural frequencies of the current controller for cable and long overhead line schemes are in the range of 5–30 Hz. Whether these frequencies would interact with the network (thermal machines, for instance) or not should be investigated for each application.

The normal way of illustrating the cooperation between a rectifier and an inverter is by reference to the well-known $U_d/I_d$ diagram. In the traditional way of controlling dc transmission, the rectifier controls the current and the inverter operates with constant margin of commutation, giving the point of operation indicated by A in Figure 4-7. As the inverter is given a current order lower than the rectifier by the value of current margin, it is forced into minimum commutation margin control. The strategy is called the constant current margin control, which gives the maximum dc voltage for a given ac voltage applied to the inverter.

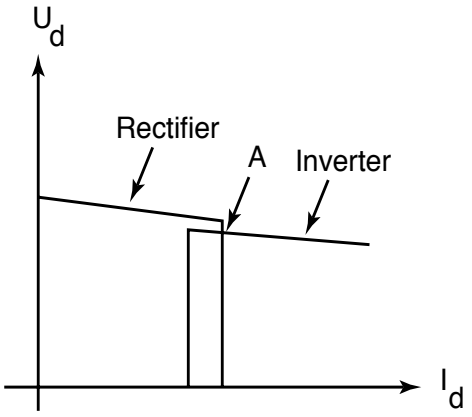


**Figure 4-7—$U_d/I_d$ characteristics for an HVDC transmission system, simple version ($U_{dio}$ constant)**


Copyright © 1997 IEEE. All rights reserved.
Copyright The Institute of Electrical and Electronics Engineers, Inc.
Provided by IHS under license with IEEE
No reproduction or networking permitted without license from IHS
Not for Resale

The slope of the nearly horizontal line of the inverter characteristic is such that an increase in current results in a decrease in voltage; i.e., the rectifier current control system experiences the inverter as a negative resistance load for small and low frequency current variations. This is easily handled by correct tuning of the current controller, as long as the magnitude of the negative resistance is moderate.

The slope of the nearby horizontal part of the invertor characteristic can be obtained from Equation (14) for the inverter direct voltage for constant γ operation neglecting resistive voltage drops (see Annex A of Part I).

$$U_d = U_{\text{dio}}\cos\gamma - d_x\frac{I_d}{I_{d\text{N}}}U_{\text{dioN}} \tag{14}$$

Normally, characteristics such as those shown in Figure 4-7 are drawn for steady state conditions, assuming constant applied ac voltage. According to Equation (1), for these conditions, the slope of the inverter characteristic is only determined by the convertor transformer impedance; i.e., $d_x$. However, $U_{\text{dio}}$ follows the ac bus voltage at dynamic variations; therefore, increased current means decreased $U_{\text{dio}}$, which is restored to its nominal value, at a longer timescale, by the convertor tap-changer and by the ac voltage control by, for example, capacitor switching.

Thus, in practice, for dynamic current variations, the negative resistance of the inverter as seen from the rectifier is also highly dependent on the network impedance. It is normally possible to attain stable operation by adjusting the control parameters in both rectifier and inverter basic control systems. If the dynamic slope of the inverter characteristic is large, as shown in Figure 4-8, instability may result.

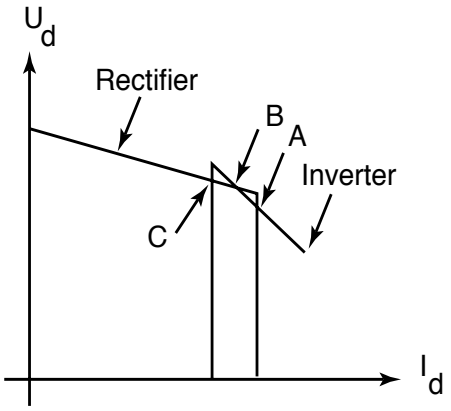


**Figure 4-8—$U_d/I_d$ characteristics for weak inverter ac system ($U_{dio}$ not kept constant)**

The modification shown in Figure 4-9 is obtained by increasing the margin of commutation by increasing γ in proportion to the decrease in current below a set reference value. The result of this measure is that the negative slope is replaced by a positive slope in the region of decreasing current. With a current oscillation superimposed on the average current value, the average resistance will then be less negative or even positive. This simplifies the conditions for the rectifier current control system considerably. It should be noted that the operating point A should move only vertically and not in a horizontal direction for inverter ac network voltage variations. The characteristic of Figure 4-9 is also useful for avoiding the so-called three-point crossover instability indicated in Figure 4-8.

The operating point A of Figure 4-9 corresponds to operation at minimum commutation margin as normally implemented to minimize the cost of the convertor station.

An alternative solution is presented in Figure 4-10a, in which the characteristics are so arranged that the normal point of operation is moved down along the part of the characteristic with positive slope. Now the inverter is able to increase the voltage at increased direct current and accordingly counteract a further

Copyright © 1997 IEEE. All rights reserved.

Copyright The Institute of Electrical and Electronics Engineers, Inc.
Provided by IHS under license with IEEE
No reproduction or networking permitted without license from IHS
Not for Resale

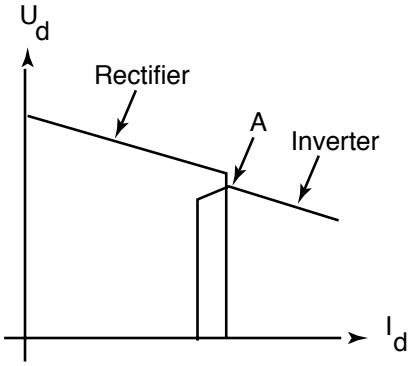


**Figure 4-9—Modified inverter $U_d/I_d$ characteristic**

increase. This method has been found to be very effective when the inverter is connected to a weak ac network. The normal operating point A corresponds to a value of γ larger than the minimum.

Another modification, shown in Figure 4-10b, is similar to Figure 4-10a, but with a horizontal characteristic near A; i.e., with constant dc voltage control. This characteristic is often used to achieve stability in the "constant power" control mode when operating with weak ac systems. Also in this case, the normal value of γ is larger than the minimum (see also 3.6.2.3).

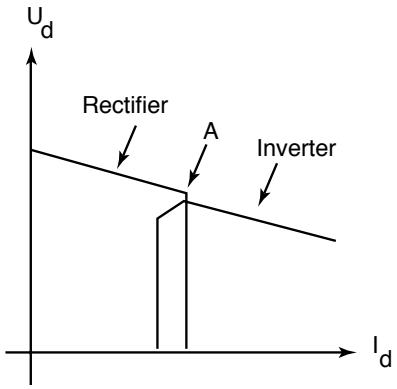


**Figure 4-10a—Modified inverter characteristic with normal operation with γ higher than minimum**

Constant power factor control has been used in some cases for securing stable operation of an inverter. Basically, this control system employs constant dc voltage control with a minimum γ limit as shown in Figure 4-10c, combined with the convertor transformer tap control to keep the voltage of the transformer valve winding constant. The margin angle is kept minimum in full-load operation and is effectively increased in partial-load operation.

Current control stability with a weak inverter ac network can also be improved by designing the system for current control in the inverter as shown in Figures 4-11. This alternative suffers, however, from increased station cost in the same way as the solution presented in Figure 4-10a and 4-10b. Normal operation with γ higher than the minimum value for a given dc line voltage, implies that the valves must be designed for higher damping circuit losses and higher ac voltage, and the resultant higher reactive power consumption of the inverter must be compensated. However, it may be justified to operate with a high steady-state γ as an alternative to the use of fast static var compensators for ac voltage stabilization.


Copyright © 1997 IEEE. All rights reserved.
Copyright The Institute of Electrical and Electronics Engineers, Inc.
Provided by IHS under license with IEEE
No reproduction or networking permitted without license from IHS
Not for Resale

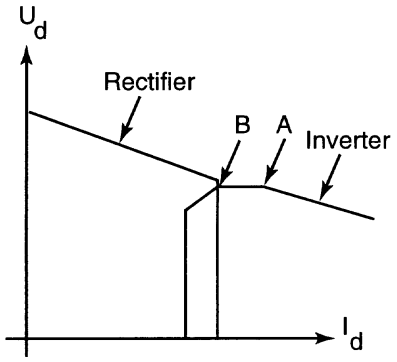


**Figure 4-10b—Alternative inverter characteristic with normal operation with γ higher than minimum**

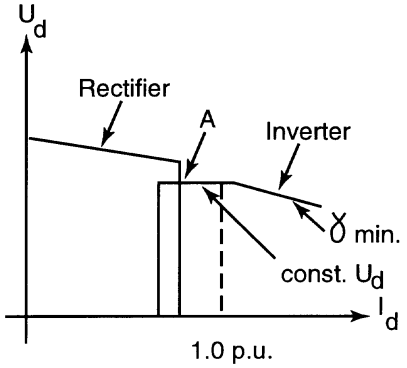


**Figure 4-10c—Inverter characteristic for constant power factor control with normal operation with γ higher than minimum**

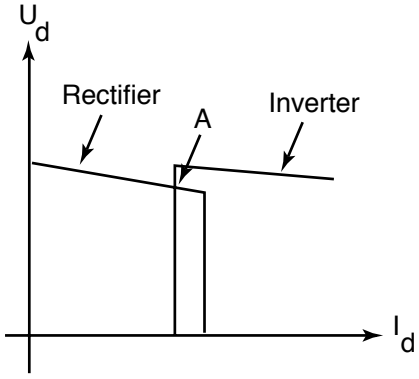


**Figure 4-11—$U_d/I_d$ characteristics for current control performed by the inverter**

Copyright © 1997 IEEE. All rights reserved.

Copyright The Institute of Electrical and Electronics Engineers, Inc.
Provided by IHS under license with IEEE
No reproduction or networking permitted without license from IHS
Not for Resale

## 4.5 Power control

From a steady-state point of view, power control of the rectifier with constant γ control of the inverter is not in itself stable if the strength of the inverter ac network is below a certain value (operation to the right of the MAP point in Figure 4-12, with γ constant). If the power order is increased, the increase in direct current will cause a decrease of the voltage by such a magnitude that the net effect would be a decrease in power infeed to the ac network. The voltage decrease will generate a still higher current and the power will further reduce until the current limit is reached. For operation with a low SCR ac system, three methods were used in practice to improve the operating conditions as discussed in 3.6.2.

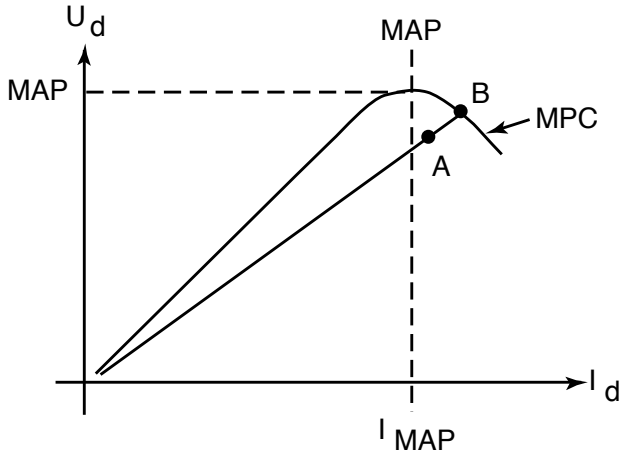


**Figure 4-12—Characteristics of HVDC transmission in power control with inverter operating at an increased γ**

However, for operation with low or very low SCR ac systems, when the operating point may normally correspond to dc currents higher than $I_{MAP}$, one possibility is to establish a sufficiently fast control of the ac voltage to avoid normal operation with a value of $dP/dI$ being negative. For example, this can be done by very fast static var compensators as discussed in 3.6.3 or by varying the value of γ to control voltage; i.e., by arranging for the inverter to behave as a static compensator. In this case the normal operating point will be at point A of Figure 4-12. The range of this type of behavior is determined by the allowed range of variation of γ (distance between points A and B), and sooner or later minimum γ will be reached at point B. When minimum γ is reached, the inverter will operate in constant γ control, and operation will try to jump to the current limit as before. The effect of this can sometimes be much improved by sliding limits; i.e., current limits tied to a power order that limits current to just above the normal value for the power order (see also 3.6.2.1).

## 4.6 Reduction of the direct current at low voltage

To avoid feeding a high current into a disturbed ac network, and to get a controlled recovery from the disturbance, it is normal to reduce the current order when the direct voltage is reduced. The break points D and E in Figure 4-13 are typically between 70% and 30% of dc voltage, and in special cases, even higher, depending on ac system requirements. The higher voltage is applied when the receiving ac network is sensitive to disturbances that could cause large voltage fluctuations as in the Itaipu scheme.

The main difference in the alternative arrangement of Figure 4-14 is that the part E-F of the rectifier characteristic is kept horizontal.

The terms VDCOL (voltage-dependent current order limit) and LVCL (low-voltage current limit) have been used for the function that reduces the current when the voltage decreases.


Copyright © 1997 IEEE. All rights reserved.
Copyright The Institute of Electrical and Electronics Engineers, Inc.
Provided by IHS under license with IEEE
No reproduction or networking permitted without license from IHS
Not for Resale

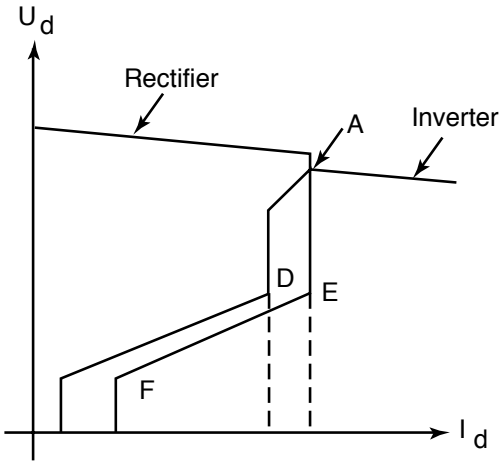


**Figure 4-13—$U_d/I_d$ characteristics with current order reduction at low voltage, alternative 1**

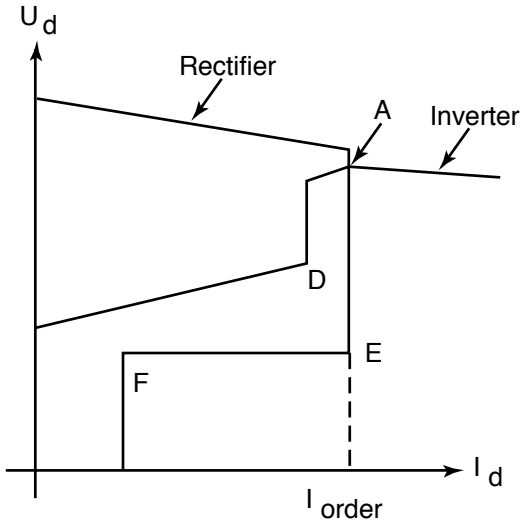


**Figure 4-14—$U_d/I_d$ characteristics with current order reduction at low voltage, alternative 2**

## 4.7 AC system instabilities

The following instabilities are examples of where the convertors can help the ac system:

a) Low-frequency instability, at frequencies from about 0.1–2 Hz. This is the region of inter-machine and inter-area electromechanical oscillations. The dc link can contribute to the damping at these frequencies by the addition of special control loops from a measured ac quantity, such as frequency or phase angle of the ac system. The feedback signal is generally "ac-coupled," so that steady-state operation is not affected.

b) Very-low-frequency instability, below about 0.1 Hz. This is the system frequency control region, relevant to machine speed control by turbine governors. Comments are as for item a). In addition, control of absolute frequency is sometimes used, either with an integral (flat) power/frequency characteristic or with a power/frequency droop, as for generators.

c) The ability of a dc link to change power relatively quickly (power run-back) can be useful as an override feature. For example, if a substantial reduction of ac voltage occurs (perhaps for a reason

Copyright © 1997 IEEE. All rights reserved.

Copyright The Institute of Electrical and Electronics Engineers, Inc.
Provided by IHS under license with IEEE
No reproduction or networking permitted without license from IHS
Not for Resale

not connected with the presence of a dc link), the dc link can be ordered to reduce power quickly, and hence the reactive power consumption, so as to restore ac voltage sufficiently to prevent ac system collapse. Another example of run-back application is the case in which an ac line connecting the convertor station to the ac network is lost.

As mentioned above, dc schemes can be used to counteract inter-machine or inter-area power oscillations by the utilization of external-area signals, such as frequency or voltage deviations, phase angle changes, or power changes in an ac parallel line.

Originally, the dc controls were designed to improve damping to real power oscillations by modulating the dc power $P_d$. No concern was taken to the reactive power changes delta $Q_d$ resulting from the modulation $P_d$. However, as the ac network becomes weaker, variations in reactive power will cause voltage variations, which can be detrimental to overall system stability. More recently, several techniques of modulation have been proposed with good results:

— Modulation of γ as a function of ac voltage variations
— Direct voltage control by inverter γ
— A coordinated modulation of transmitted active power and reactive power consumed by one of the convertor stations

## 4.8 Influence on the control of resonances in the ac network

Clause 5 discusses harmonic and resonance influences on control design.

## 4.9 Summary of convertor control instability phenomena

In principle, a combination of one or more dc links, including their filters, dc lines, and the ac systems with their machines, lines, and loads, is mathematically a single entity. It is usually convenient to subdivide instabilities into several types, distinguished by their frequency referred to the dc side, as follows:

a) Super-synchronous instability, at frequencies above fundamental. This is sometimes loosely called “harmonic instability,” though in general it is at a non-integer frequency.

   As mentioned earlier, harmonic instability was a problem in some earlier dc systems, but modern control principles should eliminate this problem.

b) Core-saturation instability, at fundamental frequency referred to the dc side (second harmonic plus dc referred to the ac side) with convertor transformer cores saturated.

   This can occur with a low or very low SCR ac system with certain resonance conditions, as discussed in Clause 5. It is cured by the proper choice of control constants or by the addition of special control loops.

c) Subsynchronous instability, at frequencies from about 5Hz to 40 Hz. This can occur either at a frequency unrelated to any natural frequency of the ac system, or in conjunction with machine torsional mechanical resonances. This is cured by the use of suitable control types and control constants, sometimes with extra control loops (see Clause 6).

d) Power control instability. With ac systems represented by fixed Thevenin equivalents, this is a “runaway” condition (in practice prevented by current limit), mathematically at zero frequency, which occurs in restricted conditions with an ac system having a very low SCR. This is discussed in Clause 3 and 4.5.


Copyright © 1997 IEEE. All rights reserved.
Copyright The Institute of Electrical and Electronics Engineers, Inc.
Provided by IHS under license with IEEE
No reproduction or networking permitted without license from IHS
Not for Resale

It should be stressed that the controls must be stable for operation in current control mode with the inverter operating at constant γ. In all control modes (constant power at constant γ, variable γ, or constant γ with static var compensators), during a temporary low ac voltage, operation will take place in current mode with the inverter at constant γ.

## 4.10 System parameters of principal interest to the controls

The response time of the dc controls is short compared to other time constants of the network. The speed that can be applied to the dc controls will be dependent on the capacity of the network to support variations of the real and reactive power of the convertors. For instance, it should be noted that a very rapid recovery after an ac system disturbance may lead to a commutation failure if the inverter ac network has a high impedance.

In designing the controls for a given power scheme, one should consider the following aspects:

a) The network impedance as a function of frequency should be known (preferably to above the third harmonic), in magnitude and phase. This parameter is important for identifying possibilities of parallel resonance in the ac network or ac/dc/ac coupling via dc line harmonic magnification; these should be damped by the controls.
b) The speed of the dc link recovery after faults should be such that it satisfies the conditions of both networks, at the rectifier and at the inverter side, if they are isolated. If there are other interconnections or a parallel ac line, the problem of adjusting the controls is quite different, because the performance of one station can greatly influence the other station. Studies should be carried out to identify the receiving and sending end ac network needs, in terms of stability, overvoltage levels, etc., and the controls should be designed accordingly.
c) The presence of other fast voltage control devices, such as static compensators in the vicinity of the convertor station, may influence the dc controls design.

## 4.11 AC voltage variations

### 4.11.1 Load rejection overvoltages

If the ac networks have high system impedance (low and very low SCR ac systems), high ac overvoltages will occur at the loss of transmitted power. The reason is that the reactive power consumption is reduced or eliminated when transmitted active power is lost while the compensation equipment, filters, and shunt banks are still connected (see Clause 8).

Loss of full load is of course the worst case and can be the consequence of a permanent fault in the dc system or a loss of commutation voltage in one of the ac networks.

A dc scheme should be so designed as to make the tripping of a bipole an extremely rare event. In the case of monopolar transmission, the loss of the whole transmission is, of course, more probable.

The overvoltage problem can be minimized by combining the convertor blocking controls with an interstation control sequence that trips filters and shunt banks as required.

Some form of backup to the interstation sequence control system must be available for the case in which the telecommunication system is out of order. Such a backup can be obtained by including protection that trips filters and shunt banks at high ac overvoltage. The action from this protection must be delayed and coordinated with ac network line protection in order not to trip the reactive elements at load rejections caused by temporary ground faults in one of the ac networks.

For a fault in the inverter ac network, the rectifier continues to feed current into the dc circuit with large delay angle alpha. This means that the convertor consumes a sufficient amount of reactive power to limit ac

Copyright © 1997 IEEE. All rights reserved.

Copyright The Institute of Electrical and Electronics Engineers, Inc.
Provided by IHS under license with IEEE
No reproduction or networking permitted without license from IHS
Not for Resale

voltage rise. If the same type of fault occurs in the rectifier ac network, it would be theoretically possible to let the inverter feed current into the dc line at a large control angle. However, an inverter must be prevented from feeding a current through a ground fault on the dc line, and for this reason it is normally provided with an alpha minimum limitation at, say, 100°. It is possible to discriminate between ac and dc faults by transmitting an indication from the rectifier to the inverter informing the latter that the fault is in the ac network (i.e., not on the dc line). However, point-to-point dc schemes should also operate without the telecommunication system. Overvoltages in the absence of telecommunications must be taken into account when considering the insulation coordination.

### 4.11.2 Temporary overvoltage at recovery after an ac system fault

When the ac voltage recovers following an earth fault, the convertor transformers are energized and harmonic inrush current is generated. Recovery after a close three-phase fault is the most critical case. If the ac side impedance—the parallel combination of the ac network and the filter and shunt banks—is high for the inrush current harmonics, the temporary overvoltage on the ac bus may be high until the current starts to flow in the dc circuit.

To minimize these overvoltages, it is important to ensure that dc current starts to flow at low dc voltage as ac voltage recovers. Some control systems are designed to allow dc current to flow at a reduced value during the fault so as to avoid the delay on ac voltage recovery.

### 4.11.3 Reduction of ac network voltage variations by dc controls

#### 4.11.3.1 Voltage change on reactive switching

When a shunt reactive bank is switched at a dc terminal, the system voltage changes in the vicinity of the terminal. At buses that directly serve consumers, the voltage change could cause the consumers' lights to blink. If the voltage change were to occur frequently, the result might be annoying flickering of lights.

Generally, weak systems exhibit a high sensitivity of voltage change on reactive switchings. Consequently, the required limit on voltage change for reactive switching would often establish the size of reactive banks; i.e., filters, capacitors, and reactors. Parameters, besides the bank size, that influence the voltage change on reactive switching are as follows:

- The ac system impedance
- The amount of shunt compensation already connected to the bus
- The amount of power being transferred by the dc convertor
- The natural action of the dc convertor and its controls following the switching event

These key parameters must be considered in establishing an appropriate voltage change criterion for a convertor terminal and in determining the appropriate size of capacitor, filter, and reactor banks for the purpose of limiting flicker.

The appropriate criterion for limiting the voltage change caused by reactive switching must also be based on the following considerations:

- The degree of consumer dissatisfaction caused by flicker resulting from the voltage change
- The relative frequency of switching events that cause the voltage change
- The relationship of voltage change at the convertor commutation bus to the voltage change at lower voltage buses serving consumers (the higher the impedance between the convertor commutation bus and low voltage buses to which consumers are connected, the lower the voltage change on the lower voltage system)


Copyright © 1997 IEEE. All rights reserved.
Copyright The Institute of Electrical and Electronics Engineers, Inc.
Provided by IHS under license with IEEE
No reproduction or networking permitted without license from IHS
Not for Resale

The permissible flicker limits in the *Electrical Transmission and Distribution Reference Book* [B26], Ellert et al. 1978 [B27], and in *The Visual Perception and Tolerance of Flicker* [B83] provide some guidance in this area. Considering a typical frequency of reactive switchings in dc installations (about 2/h to 2/min), it appears that 2–3% is a reasonable upper limit on voltage change to avoid customer dissatisfaction due to voltage flicker.

Moreover, a suitable criterion for voltage change on reactive switching should permit a slightly higher limit on voltage change at low power transfer levels than it would at rated power transfer levels, because dc systems will seldom operate near minimum power transfer levels and because shunt banks are not frequently switched in such situations.

#### 4.11.3.2 Application of dc controls

The consumption of reactive power in a dc convertor is, among other parameters, dependent on the control angles $\alpha$ or $\gamma$. A control function can be used to limit variations of ac voltage by varying the control angle of the convertor. This type of control is suitably applied in the convertor station that determines the direct voltage. However, it should be noted that varying the angle, and by this, the consumption of reactive power in one convertor station, also results in a corresponding variation in control angle and reactive consumption in the other station. It must be determined that this is acceptable before a decision is made to use this type of control.

To limit ac voltage variations in both directions, the inverter must operate in steady state with a $\gamma$ higher than the minimum value. This means higher equipment costs for valves, convertors, transformers, and reactive compensation equipment, and also higher losses, but this may still be the cheapest solution.

In cases where it is sufficient to limit only the overvoltages, normal operation can be at $\gamma$ minimum, avoiding the extra cost of the equipment.

To reduce the variations in ac voltage caused by shunt bank switching, a step change of suitable magnitude in $\gamma$ can be coordinated with the bank switching. When switching in a capacitor bank, $\gamma$ is increased as simultaneously as possible. To switch off a bank, $\gamma$ is first slowly increased; and when the bank is switched off, $\gamma$ is simultaneously decreased in a step back to the normal value.

### 4.11.4 Tap-changer control

The convertor transformers are normally provided with tap-changers that are integrated into the control system to influence given dc quantities.

With an inverter in constant commutation margin control the tap-changer is often used to keep the direct voltage in steady-state close to a rated value. In a current-controlling rectifier, it is normally used to control alpha to a value around a rated value. Other variations are sometimes used, such as to control $\gamma$ in an inverter operating in closed loop $I_d$ or $U_d$ control.

In all cases, the objective is to increase or decrease the voltage on the valve side of the convertor transformer by increasing or decreasing the turns ratio. However, this change in transformer turns ratio also changes the reactive consumption of the convertor, and this may counteract the tap-changer stepping. Thus, a decrease in the turns ratio, with the intent of increasing the valve side voltage, may increase the reactive consumption of the convertor to such a degree that with a low or very low SCR ac network, the effective change in the valve-side voltage will be very low. In such a situation, many tap-changer steps must be taken to attain the necessary variation in valve-side voltage, with the consequence that the effective tap-changer range will be low, and the tap-changer will operate very frequently.

With a low or very low SCR ac network (SCR below about 2.0 and depending on the impedance angle) the net effect in voltage variation when stepping the tap-changer may be even negative; i.e., the valve-side voltage will decrease when the transformer network-side turns ratio is decreased, and vice versa. This phenomenon is discussed in Piwko et al. 1986 [B67].

Copyright © 1997 IEEE. All rights reserved.

Copyright The Institute of Electrical and Electronics Engineers, Inc.
Provided by IHS under license with IEEE
No reproduction or networking permitted without license from IHS
Not for Resale

## 4.12 AC network frequency and stabilization control

### 4.12.1 Introduction

The inherent controllability of the power transmitted by a dc system is unique in electrical power transmission; i.e., the power transmitted by the dc line is easily controlled with a high speed of response. Furthermore, the interconnection of two or more ac systems or of two or more buses in one ac system by a dc link is asynchronous, and the transmission stability is not affected by a phase angle difference.

Thus, the dc transmission can be used for stabilization of an ac system by modulating the power transmitted in accordance with the variations in some ac system quantity, such as frequency or phase change. The link can also be used to directly control the frequency of an ac network connected to one of the substations.

These applications will be discussed below with reference to some typical cases.

### 4.12.2 Constant frequency control

A dc system can be used for transmitting power to an isolated area network without local generation, and with a synchronous compensator as the dominating rotating inertia. The frequency of this network must be controlled by varying the power transmitted on the dc line to attain balance between the load in the network and the infeed of power. To do this, the deviation from nominal frequency in the island network is measured by a frequency discriminator and fed to a control amplifier. The output from the latter is used as a current order or forms a contribution for an operator-set current or power order on the master control hierarchical level.

By incorporating such a control system, the frequency can be kept very close to the nominal value as long as the dc transmission is in operation. The largest frequency deviation is, however, obtained during serious faults in the ac network to which the rectifier is connected, and this deviation is in the worst case determined only by the load, the inertia of the synchronous compensator, the duration of fault, and the speed of recovery of the dc link. This may be a guideline for the decision about the size of the synchronous compensator to be installed (see also Clause 2 and Clause 9).

Figure 4-15 illustrates constant frequency control.

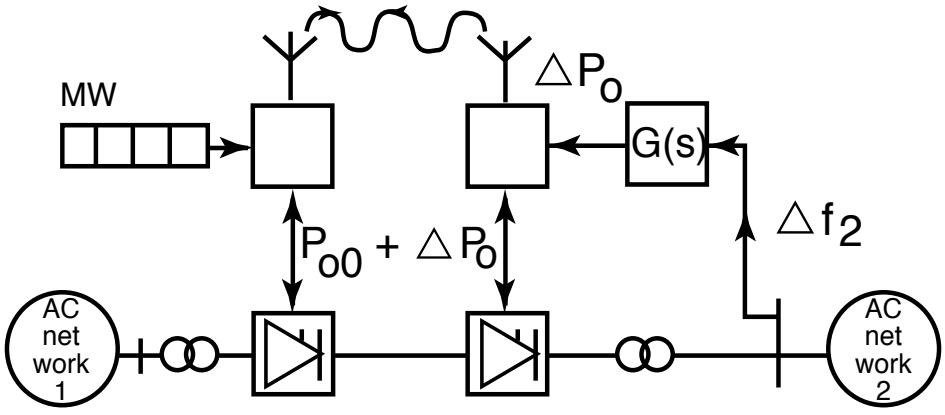


**Figure 4-15—Constant frequency control of an island ac network**

### 4.12.3 Power/frequency control

DC transmission can be used to assist the existing power generation station in controlling the frequency of the network by modulating the transmitted power in proportion to the frequency deviation. It is often stated


Copyright © 1997 IEEE. All rights reserved.
Copyright The Institute of Electrical and Electronics Engineers, Inc.
Provided by IHS under license with IEEE
No reproduction or networking permitted without license from IHS
Not for Resale

in such cases that a dead-band for the frequency deviation shall exist. The gain of the regulator as well as the gain of the dead-band are normally variable.

Figure 4-16 shows an example of a controller arrangement in which the power/frequency control unit generates an additional power order $\Delta P$ to a manually set order $P_o$.

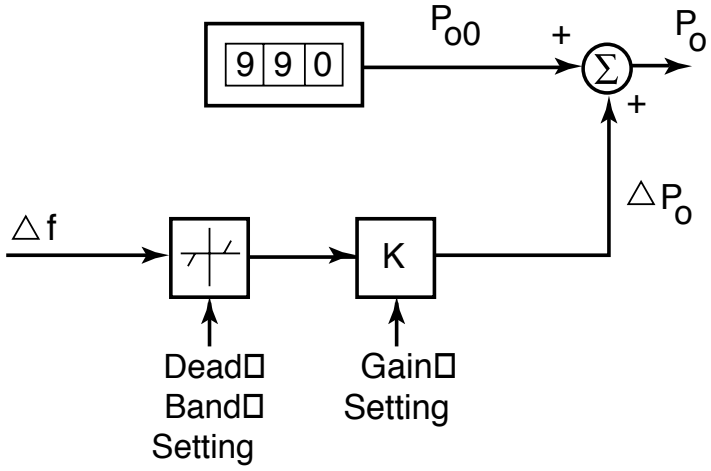


**Figure 4-16—Power/frequency controller**

If required, the regulator can be so designed that its characteristic is similar to a turbine governor as illustrated in Figure 4-17.The control function has a variable static feedback (speed droop) giving a resulting transfer function:

$$\frac{\Delta P(S)}{\Delta f(S)} = \frac{1}{b_p} \times \frac{1}{1 + s\left(\frac{T_y}{b_p}\right)} \tag{15}$$

with

$T_y$ = response time of the pilot servomotor
$b_p$ = permanent feedback (speed droop)

When $b_p$ is set to zero,

$$\frac{\Delta P(S)}{\Delta f(S)} = \frac{1}{sT_y} \tag{16}$$

i.e., we have obtained constant frequency control according to the preceding paragraph.

### 4.12.4 Stabilization of an ac interconnection by a parallel dc link

When two ac systems are interconnected by parallel ac and dc links, the latter can be used to stabilize the interconnection to a degree that is not possible with ac systems alone.

In Figure 4-18, two ac networks are interconnected by two ac lines and one parallel dc line.

Copyright © 1997 IEEE. All rights reserved.

Copyright The Institute of Electrical and Electronics Engineers, Inc.
Provided by IHS under license with IEEE
No reproduction or networking permitted without license from IHS
Not for Resale

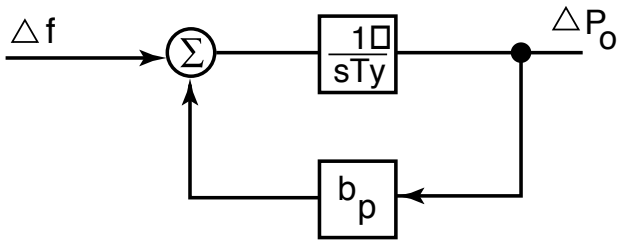


**Figure 4-17—Turbine governor power/frequency control**

Here it is important that the phase angle difference

$$\Delta\delta = \delta_1 - \delta_2 \tag{17}$$

between the two ac networks does not exceed a critical limit for the interconnection to be stable. The critical limit may be reached when the load in one of the networks is suddenly changed or when one of the two ac links is lost. If $\Delta P_L$ corresponds to a load increase in the receiving ac network [Equation (15)], this network decelerates. If one ac link is lost, ac network 1 accelerates and ac network 2 decelerates.

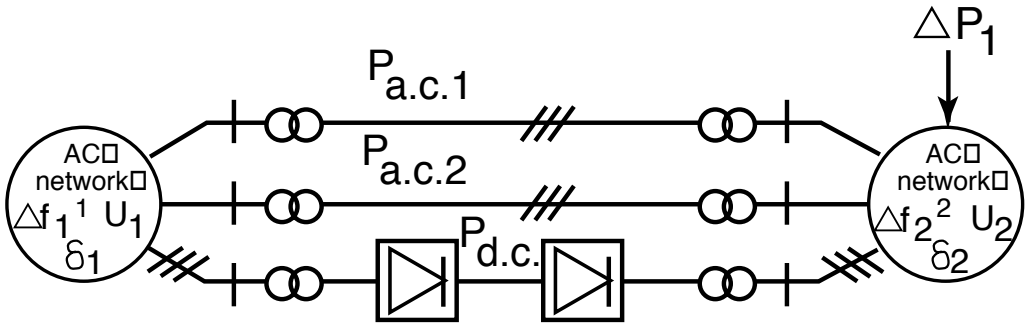


**Figure 4-18—Stabilization of an ac link by a parallel dc line**

If, in this case, the power order for the dc line is partly determined by a regulator that derives a power order from suitable ac system quantities in the two ac networks or the two ac lines via a control amplifier with suitable dynamic properties, the interconnection may be stabilized.

The most probable quantities to be measured are the frequency deviations $\Delta f_1$ and $\Delta f_2$. The regulator derives the power order from the difference between these two frequency deviation signals; i.e.,

$$P_o = G(s) \cdot \Delta F(s) = G(s) \cdot [f_1(s) - f_2(s)] \tag{18}$$

where $G(s)$ is the transfer function of the regulator.

A possible alternative to the frequency may be the measurement of the power transmitted on the ac line as this power is determined by the phase angle difference between the interconnected networks according to

$$P = \frac{U_1 U_2}{X} \sin(\delta_1 - \delta_2) \tag{19}$$


Copyright © 1997 IEEE. All rights reserved.
Copyright The Institute of Electrical and Electronics Engineers, Inc.
Provided by IHS under license with IEEE
No reproduction or networking permitted without license from IHS
Not for Resale

In special cases, one of the two networks may be so large that its frequency is not affected by variations in the power transmitted on the dc line. The situation is accordingly simplified and the power on the dc line can be modulated with regard only to the frequency of the smaller network.

The stabilization regulator is normally active only during transients; i.e., the static gain of the regulator is zero. Further, to optimize the stabilization ability of the dc link, the gain of the regulator is made as high as possible for the important frequency region in which the oscillation frequencies are found. Digital computer simulations, using power system stability programs, are normally performed for the determination of an appropriate transfer function.

This technique for stabilizing a parallel ac line by dc has been applied in the Pacific DC Intertie. Here oscillations in the parallel ac intertie are detected by measuring the power transmitted in the ac line and are, after some filtering, used to modulate the dc power. The latter is obtained by modulating the current order in the rectifier only with a maximum amplitude of 3% of rated current, which guarantees that there will be enough current margin, even at a reduction of the current.

### 4.12.5 Stabilization of isolated ac system by a dc link supplied from an isolated system

Where the dc link is supplied from an isolated ac system (e.g., a generating station) and feeds a complex ac receiving system, the dc link can be used to provide damping widely over much of the receiving system. For example, if the local receiving system has weak ac tie lines to a neighboring system, the two systems can exhibit relative swings due to transients at a frequency often well below 1 Hz, at which machine damper windings give poor damping. (See Figure 4-19.)

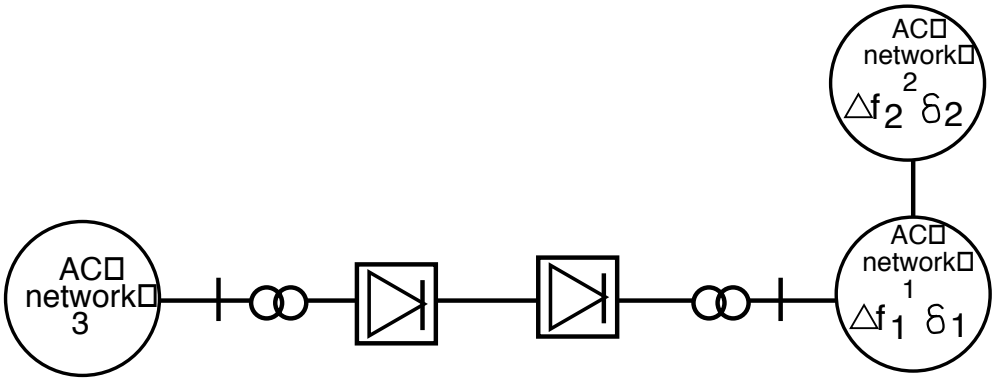


**Figure 4-19—Stabilization of a weak interconnection within one of the ac networks**

This is the case in the Manitoba system in Canada, where the natural swing frequency relative to Saskatchewan is about 0.3 Hz, and the systems can actually exhibit negative damping (continuous oscillation) in some conditions without the Nelson River dc link. This was substantially improved by modulation of the latter to provide strong damping. The method is based on a measurement of the change of absolute phase of local busbar voltage. This has the advantage of requiring no telecommunication for its derivation and yet can detect and damp prospective swings in many parts of the ac system.

In a more general case, there might be complex ac systems at both ends of a dc link; damping can be provided to both if damping signals are taken from each ac busbar. Of course, it must be accepted that any dc modulation will affect the power in ac systems at each end of the dc link; however, the effect is usually small, and usually control constants can be chosen so that both systems are well damped.

Copyright © 1997 IEEE. All rights reserved.

Copyright The Institute of Electrical and Electronics Engineers, Inc.
Provided by IHS under license with IEEE
No reproduction or networking permitted without license from IHS
Not for Resale

### 4.12.6 Telecommunication requirements

For higher-level control, the capacity and speed of response of the telecommunication link are of importance.

Both of these properties depend on the bandwidth of the telecommunication link and the terminal interface equipment. As an indication of the requirements, assume that the current order is to be transmitted alone on one telecommunication channel. Modern remote control terminal equipment together with a 2400 Bd channel can handle a message with 11 information-carrying bits and a reasonable number of administration bits, with a delay of about 20 ms. The delay in this case is highly dependent on the number of security bits included. Eleven bits can be used to represent a current order with a resolution of 0.05%. Such a telecommunication link normally represents enough capacity for damping control, as the expected oscillation frequency for a disturbed ac network is normally below 2 Hz. Sometimes, different types of information are combined in one message, with the consequence that the telecommunication delay is increased.

For constant frequency control and power/frequency control, the capacity requirement on the telecommunication system is more moderate; as such, control can be made rather slow.

To avoid unnecessary telecommunication delay, the leading master control equipment—i.e., that part of the master control system where the current order is calculated—should be located in the dc substation nearest to the controlled quantity. Or, if quantities in the two ac networks are controlled, the leading master control equipment should be nearer to the more sensitive ac network.

### 4.12.7 Power system damping and frequency control without telecommunication

Temporary breaks of telecommunication must not be allowed to impair modulation-control functions. One solution is to force the station in which the controlled quantity is measured to take over current control when the telecommunication system fails, unless it is already in control. This situation occurs if the ac network connected to the inverter is to be stabilized by damping control and the direct current is controlled by the rectifier. In this case, the inverter is forced to take over current control and dc power is then determined by the station connected to the ac network that has to be stabilized by frequency control. The current order in the other station is determined by the measured current response and a margin that is added with suitable sign. Figure 4-20 illustrates this case.

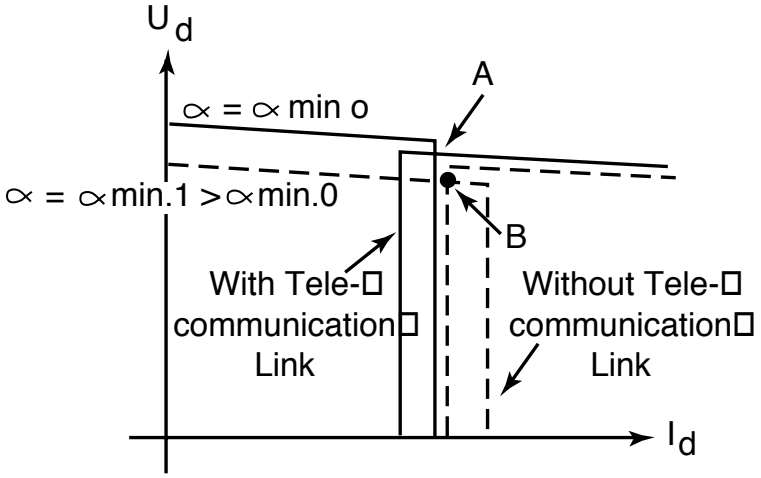


**Figure 4-20—Backup control without telecommunication**

A simpler method, which does not rely on the derivation of the current order from the current response, is to lock the control orders from the master control system in both substations when the telecommunication link


Copyright © 1997 IEEE. All rights reserved.
Copyright The Institute of Electrical and Electronics Engineers, Inc.
Provided by IHS under license with IEEE
No reproduction or networking permitted without license from IHS
Not for Resale

fails, and then add the additional modulating order only in that station in which the controlled quantity is measured. The order in the other station is continuously kept locked. In this case, the modulating order contribution must be limited to, say, 0.5 of the current margin. The current margin can be increased to provide larger modulation signals.

### 4.12.8 Emergency power control

This is the name used for a type of stabilization control applied with success in a number of dc schemes, including the Konti-Skan, Skagerrak, and Fenno-Skan transmission systems. The idea is that the transmitted power is changed by a preset amount of megawatts with a preset rate of change as a result of a significant change in an ac system quantity, usually the system frequency. Such a significant change is interpreted as an indication that a large disturbance has occurred in the power system.

Several reference levels for the change in the system quantity can be used—in Skagerrak there are six levels—and the action from the emergency controller can increase or decrease the transmitted power, and also the power flow direction can be changed.

### 4.12.9 Influence on both ac networks of dc power modulation

It should be noted that modulation of the dc link power, in order to control an ac system quantity, affects both the sending and receiving ac networks. This means, for example, that when oscillations in one ac network are damped by the dc link, the other network must accept the same degree of power modulation.

## 4.13 Control and protection considerations for back-to-back schemes

With only a few exceptions, all the principles of control and protection for point-to-point transmissions also apply to back-to-back schemes.

With no dc line there is no requirement for dc side filters. Communication requirements for interstation convertor control are greatly simplified with back-to-back schemes. There is no need for an interstation telecommunication system and associated backup when all convertor controls are located in the same building, as in the case of the back-to-back schemes.

Load rejection overvoltages in the undisturbed ac network following a serious fault in the other ac network can be more readily controlled in a back-to-back scheme, as there is no dc transmission line, and accordingly no need for a minimum limitation of alpha to 100° as discussed in 4.11.1. In the back-to-back configuration, the convertor connected to the faulted ac (rectifier or inverter) system, upon sensing a severe ac voltage drop, can automatically block during the ac fault, form a bypass valve pair, and carry current fed from the unfaulted side convertor. The convertor on the other side connected to the “healthy” ac system can automatically be operated as a rectifier with valve commutation in the normal manner with a firing angle alpha close to 90° (in a TCR mode). With limited direct current (less than 0.5 pu), it can absorb a relatively high amount of reactive power. By absorbing reactive power from the ac system, the convertor limits the ac overvoltage during the fault. Point-to-point dc configurations would require quick telecommunications to limit overvoltages in the preceding manner if the fault occurs in the rectifier ac network. This could theoretically be done, but it is not advisable to rely on telecommunication for limiting ac overvoltages to a safe level.

Overvoltages can also appear on the ac systems when there is not an ac system fault, for example, due to a sudden power reduction by the dc link, or due to changes within the ac system. Such overvoltages can be limited rapidly by a TCR mode control loop that overrides normal controls; this must act on the inverter irrespective of which ac system has the overvoltage, with the rectifier continuing to control dc current.

The overvoltage, due to load rejection, can be controlled more reliably than with geographically separated stations, by immediately tripping the ac filters connected to both ac networks.

Copyright © 1997 IEEE. All rights reserved.

Copyright The Institute of Electrical and Electronics Engineers, Inc.
Provided by IHS under license with IEEE
No reproduction or networking permitted without license from IHS
Not for Resale

In summary, it can be stated that most of the control functions are easier to realize for a back-to-back scheme than for point-to-point transmission. This can result in better performance if the basic conditions are equal in other aspects.

## 4.14 Control and protection considerations for multiterminal schemes

That the conventional current margin control principle can be applied to systems with more than two terminals connected in parallel was demonstrated in 1963, by Lamm, Uhlmann, and Danfors [B57]. The main difference between the control systems for two terminal and multiterminal schemes is mainly found at the master control level ([see [B57]). Control principles for multiterminal applications with other control characteristics have also been proposed.

The load flow in a multiterminal system is not as simple as in the two-terminal system, and consequently a number of control functions must be included in the master control, either for automatic action or for assistance to the operator. Examples of additional tasks in the master control of a multiterminal system are as follows:

— Balancing of the power orders for the different convertor stations
— Coordination of power order ramping
— Balancing and distribution of current orders to the convertor stations
— Coordination of power modulation
— Controlling the direct voltage at one of the stations
— Determining temporary load flow for fast recovery after contingencies
— Assisting the operator in determining the load flow and dc system configuration after a loss of components.

Specific requirements of individual schemes may call for other control functions to be implemented.

The protections that are concerned with individual main circuit components are basically the same for multiterminal and for two-terminal systems. Care must be taken for protections that involve actions that influence the whole system. An example of such protection is the dc line protection that must be designed to operate satisfactorily, even when no telecommunication is available.

In some cases, especially for meshed dc network schemes, it may be necessary to include in the protection system a function that, by current change measurement in the dc system nodes, can identify a faulty dc line section for fast disconnection. As mentioned, this is of special interest for meshed network schemes, because in this case the power can reach all stations even if a line section is lost, and fast automatic line section tripping can be applied by using dc breakers.

The discussion above refers mainly to multiterminal systems with convertors connected in parallel to the dc line. In the special case in which tapping stations have a very low rating compared to the main transmission, probably less than 5% of the main transmission rating, it may be useful to connect them in series with the main station. In this case, the direct current is the same through all convertors and the tapped power must be controlled by a basic voltage control system that controls the voltage across the convertor bridge. The amount of power that can be taken from such a tapping convertor is dependent on the current in the transmission and is low when the current is low.

## 4.15 Higher-level controller characteristics for dc schemes in operation

In this subclause, some examples of structures of regulators for higher-level control functions are presented. Most dc transmission systems are provided with such control functions used for ac system stabilization by modulation of the transmitted active power or the reactive power consumed by the convertor or for steady-state or transient control of ac system frequency by varying the transmitted power.


Copyright © 1997 IEEE. All rights reserved.
Copyright The Institute of Electrical and Electronics Engineers, Inc.
Provided by IHS under license with IEEE
No reproduction or networking permitted without license from IHS
Not for Resale

### 4.15.1 The CU Project

In the CU dc system, a bipolar transmission with a rating of 2 × 500 MW, power is transmitted from a coal-fired turbine generator station in Coal Creek, North Dakota to Dickinson, close to Minneapolis, Minnesota. The two convertor stations are interconnected by a meshed ac network.

The dc link is used to stabilize the ac network and the modulation power order is derived from frequency deviation measured at both rectifier and inverter commutation buses.

The modulating power order is

$$\Delta P_m = \Delta P_{m\mathrm{R}} - \Delta P_{m\mathrm{I}} = H_{\mathrm{R}}(S) \times \Delta f_{\mathrm{R}} - H_{\mathrm{I}}(S) \times \Delta f_{\mathrm{I}} \tag{20}$$

where subscript R and I refer to rectifier and inverter, respectively. Here,

$$H_{\mathrm{R}}(S) = \frac{5000s}{(1 + 1.59s)(1 + 0.159s)} \tag{21}$$

$$H_{\mathrm{I}}(S) = \frac{9000s}{(1 + 0.531s)(1 + 0.531s)} \tag{22}$$

$\Delta P_{m\mathrm{I}}$ is sent by telecommunication from the inverter to the rectifier.

The power modulation control for the CU project was originally based on the frequency in the sending end network, but it was later found that consideration must also be given to the receiving network frequency as discussed here.

### 4.15.2 Itaipu

The Itaipu dc transmission project consists of two bipoles with two 12-pulse convertors connected in series in each pole and with a pole voltage of 600 kV. It transmits 6300 MW from nine 700 MW, 50 Hz generators in the Itaipu hydroelectric plant to the 60 Hz Brazilian ac network with the inverters located in the Sao Paulo area. Paraguay, with its 50 Hz network, presents a small local load in the Itaipu end of the transmission.

The Itaipu project is provided with three types of modulating controls. A control for reactive modulation of the inverter acts on the γ reference. It has a transfer function from ac network voltage to γ modulation equal to

$$H(S) = \frac{49.3s^2}{(1 + 0.482s)(1 + 0.318s)(1 + 0.08s)(1 + 0.053s)} \text{degree/pu voltage}$$

This controller is not always in operation because it is not always needed. In fact, it was found in practice that the network did not need voltage stabilization and the γ modulation regulator has been disconnected.

The active power is modulated by frequency controllers for both sending and receiving ac networks.

The dc bipoles are the only loads of importance for the 50 Hz Itaipu generators, and the transmission links must assist in controlling their frequency.

Copyright © 1997 IEEE. All rights reserved.

Copyright The Institute of Electrical and Electronics Engineers, Inc.
Provided by IHS under license with IEEE
No reproduction or networking permitted without license from IHS
Not for Resale

For the receiving 60 Hz system, the dc transmission is provided with a power/frequency control function with adjustable gain (similar to droop setting in a generator station). At a significant control action from the sending-end 50 Hz controller, the 60 Hz regulator is put in hold position.

The structures of these controllers are presented in Figure 4-21. The block diagram refers to one bipole (1 pu = 3150 MW).

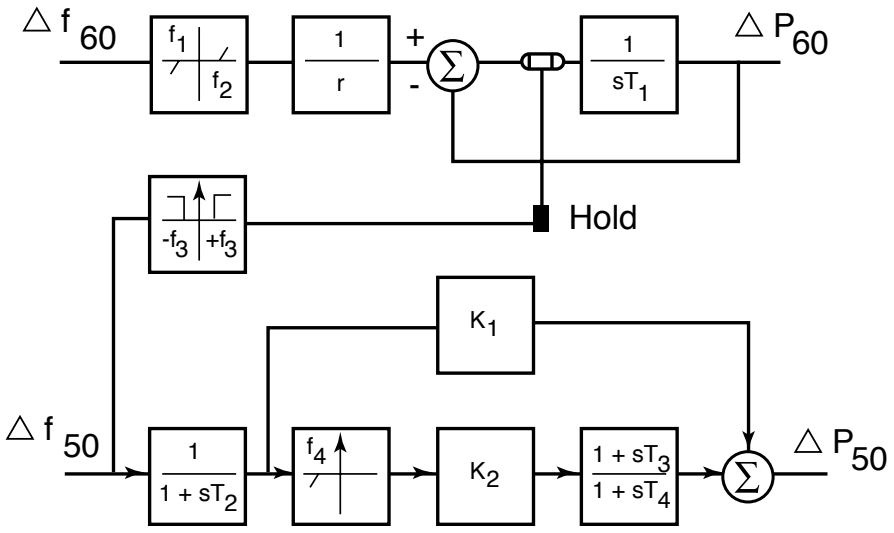


$f_1 = -f_2 = 0.05$ Hz  $r = 5\%$  $T_1 = 1.5$ s
$f_3 = 0.2$ Hz  $K_1 = 0.01$ p.u./ Hz  $T_2 = 0.1$ s
$f_4 = 0.4$ Hz  $K_2 = 0.86$ p.u./ Hz  $T_3 = 1.0$ s
$T_4 = 5.0$ s

**Figure 4-21—Itaipu frequency controllers for 50 Hz and 60 Hz networks**

### 4.15.3 The intermountain power project (IPP)

The IPP dc system transmits power from a generating station in Utah to the Los Angeles area in the United States. The dc link, which is rated 800 MW per pole (500 kV and 1600 A), can be in a radial configuration with the generators, but an ac load in the form of outgoing lines can also be connected. Thus, a frequency control function is used in the sending-end side.

The frequency controller configuration is different for radial operation and operation with an ac system connected. Figure 4-22a is the one used in radial operation with an integral part included. As indicated, the integral part is located on the bipole hierarchical control level with a proportional part in each pole.

When the ac network is connected, a proportional controller with dead-band according to Figure 4-22b per pole is used.

### 4.15.4 The Gotland transmission

The Gotland transmission system was extended during 1987 to a bipolar transmission with a total rated capacity of 260 MW feeding the island of Gotland. The maximum service power at present is limited to 165 MW. The island normally has no power generation of its own but synchronous compensators with a total capacity


Copyright © 1997 IEEE. All rights reserved.
Copyright The Institute of Electrical and Electronics Engineers, Inc.
Provided by IHS under license with IEEE
No reproduction or networking permitted without license from IHS
Not for Resale

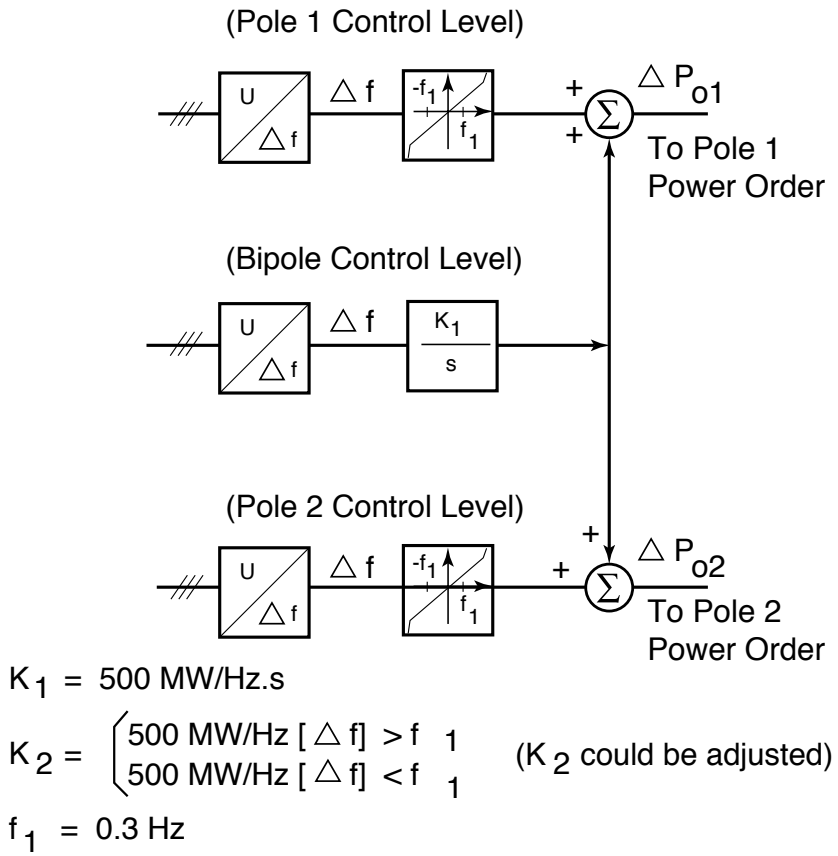


$K_1$ = 500 MW/Hz.s

$K_2$ = { 500 MW/Hz [△f] > $f_1$ ; 500 MW/Hz [△f] < $f_1$ } ($K_2$ could be adjusted)

$f_1$ = 0.3 Hz

**Figure 4-22a—IPP frequency controllers for sending end ac network—sending end generators in radial connection**

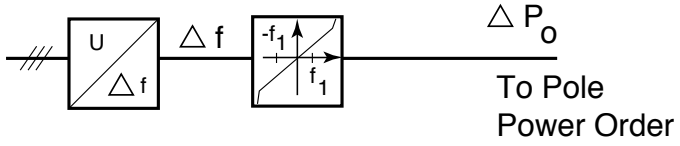


$K_2$ = 500 MW/Hz

$f_1$ = 0.3 Hz

**Figure 4-22b—IPP frequency controllers for sending end ac network—ac network connected**

of 196 MVA are connected close to the convertor. The *H* factors for those compensators are 1.7 (70 MVA), 2.5 (77 MVA), 1.7 (30 MVA), and 0.8 (19 MVA), which, according to 2.3, gives $H_{dc}$ = 2.3 (see Clauses 2 and 9).

A frequency controller of PID type is included in the dc control system. It has the following transfer function:

$$G(s) = \frac{\Delta P}{\Delta f} = K_1 + \frac{K_2}{S} + K_3 S$$

Copyright © 1997 IEEE. All rights reserved.

Copyright The Institute of Electrical and Electronics Engineers, Inc.
Provided by IHS under license with IEEE
No reproduction or networking permitted without license from IHS
Not for Resale

where

$K_1$ = 30 MW/Hz
$K_2$ = 27 MW/(Hz · s)
$K_3$ = 20 (MW · s)/Hz

At the start of the transmission with the de-energized ac network, a diesel engine accelerates the 30 MVA synchronous compensator, disconnected from the ac network and the other compensators, up to 30 Hz. Then the dc link is deblocked and takes over and increases the speed up to 50 Hz. During this interval, only the proportional part of the frequency regulator is in operation. However, the transmitted power is limited to around 3 MW during acceleration, and the link acts as a constant power source until the frequency is close to 50 Hz. The other compensators are electrically started after 50 Hz has been reached and some load has been connected.

### 4.15.5 Other projects

In Grund 1981 [B41], the control systems for the following North American projects are presented:

a) David A. Hamil DC Tie (the Stegal back-to-back tie)
b) Pacific DC Intertie
c) Square Butte DC System
d) Nelson River Bipoles 1 and 2
e) Vancouver Island DC System
f) Eel River Back-to-Back DC System
g) CU DC System (original version)

The Cabora Bassa dc transmission between Mozambique and South Africa is discussed in Goosen and Becker 1975 [B40].

## 4.16 Protection

There are only a few protection aspects of interest with reference to ac/dc interaction. For instance, for the setting of parameters such as delay times, operation times, and detection levels for the dc protection, there is often a need for coordination with the ac side protection. For the case of the detection (delay) time for a persistent commutation failure, the convertor tripping must be set with consideration of the settings of ac side line protection. A serious ac system fault must not be interpreted as a permanent valve fault that produces commutation failures. Thus, the delay time to convertor blocking from such a protection must be longer than the time during which a fault in the ac system can exist until the faulty part is disconnected by ac protection. The same applies to a possible simple dc side undervoltage protection that is designed as a backup for the dc line protection to detect a ground fault on the dc side. The delay time to blocking from this type of protection must also overlap the delay time of ac line protection, as serious faults in the ac system also cause low voltage on the dc side of the dc convertor.

In a few cases, the ac network impedance has some importance for the functioning of dc protection. One such case is the commutation failure protection and its need to make a fast detection of a faulty valve. A permanent valve fault is a very rare event and can, from the practical point of view, only affect one six-pulse bridge at a time. If the ac network to which the convertor is connected has a high SCR, disturbances generated by the faulty bridge will not cause a commutation failure in other bridges. A fast identification of the faulty bridge by the commutation failure protection is possible. On the other hand, if the ac network has a low SCR, the original valve fault may cause commutation failures in the other bridges. Accordingly, the commutation failure protection delay time must be long enough to let the ac side protection to disconnect a supposedly faulty ac branch, and a permanent valve fault cannot be identified until this possible fault in the ac network has been disconnected.


Copyright © 1997 IEEE. All rights reserved.
Copyright The Institute of Electrical and Electronics Engineers, Inc.
Provided by IHS under license with IEEE
No reproduction or networking permitted without license from IHS
Not for Resale

Another aspect to consider here is the influence of the ac transmission on ac line protection close to the dc convertor station. This protection is designed to measure sinusoidal voltage waveforms and can be disturbed by a high content of harmonics. As long as the ac network has a high SCR, the amount of harmonics in the voltage waveform is normally not critical for the ac line protection.

However, when the network impedance is high, the harmonic current generated by the convertor at asymmetrical ac system faults will disturb the ac voltage considerably. This may cause incorrect operation of the ac line protection. The short-circuit level and fault current distribution of the ac network, possible harmonic resonance, etc., are important factors in this case. The choice of the type of protection to be used should be considered, and sometimes additional filtering of the input signals should be applied.

# 5. Resonances, instabilities, and harmonic transfer

## 5.1 Introduction

All practical electrical circuits and networks have natural frequencies of oscillation or resonances, and dc schemes are no exception. It is also true that in active circuits involving control systems, these resonances may contribute to potential instabilities in any system.

Another feature of many electrical devices (for example, synchronous machines), is that a certain frequency appearing at the terminals of a device will be transferred through the device and may appear as side-bands or transferred harmonics in some other part of the system. In machines, this feature contributes to subsynchronous torsional interactions. This feature of harmonic transfer also occurs on dc schemes, with the convertors acting as modulators. Frequencies that are present on the ac side of a convertor will be transferred through as side-bands to the dc side, and vice-versa.

It is clear, therefore, that what might appear to be separate phenomena of resonance, instability, and harmonic transfer are in fact interdependent, and have thus been included in Clause 5.

## 5.2 Basic concepts

In an examination of resonances and related problems, there are several basic concepts that must be defined and explained. This is particularly so when control loops are involved in the phenomena. A brief explanation of these concepts is, therefore, given here. A more detailed understanding will be found in Ekstrom 1986 [B25], Jotten et al. 1978 [B50], Knaak and Venne 1987 [B54], Yacamini and DeOliveria 1980 [B87], and Yacamini and DeOliveria 1986 [B88].

### 5.2.1 Loop instability

This type of instability is the classical type of instability that is described in standard control texts. This will in general “grow from nothing” and can occur at any frequency, either integer or non-integer, both on the ac and dc sides (non-integer will, of course, be more common). This can happen even in a perfectly balanced system with no extraneous injection.

In dc schemes that are connected to ac power supplies of a fixed frequency, it is useful to consider instabilities at frequencies both higher and lower than the ac system fundamental frequency, the so-called subsynchronous and supersynchronous frequencies.

Copyright © 1997 IEEE. All rights reserved.

Copyright The Institute of Electrical and Electronics Engineers, Inc.
Provided by IHS under license with IEEE
No reproduction or networking permitted without license from IHS
Not for Resale

At subsynchronous frequencies, typically in the range from 5–40 Hz, one may encounter a conventional control instability that can be cured by suitable choice of control loop gain and other parameters. The behavior in this frequency region also influences mutual effects, including possible instabilities, with shaft torsional resonances in nearby machines.

An instability that occurs at a supersynchronous frequency has been loosely described as a "harmonic instability." In general, it starts from a non-integer frequency, nearly always close to a resonance; however, it can lock into the nearest harmonic frequency as instability amplitude grows. This has been generally cured by use of the phase-locked oscillator (equidistant-firing) type of control system.

### 5.2.2 Harmonic magnification

It can be shown that, viewed from the ac terminals, a dc convertor appears substantially as a source of harmonic current. This is true for both characteristic harmonics; i.e., those of order $n = kp \pm 1$ where $k$ is an integer and $p$ the pulse number, and also for noncharacteristic harmonics. The effective impedance in which this current flows is that of the complete system comprising the ac system, capacitors, cables, filters, machines, loads, reactive compensators, etc. Because the system is current-fed, the worst case will be when the impedance is a maximum. This will be characterized by a maximum in the impedance versus frequency curve.

For ac systems with SCR lower than three, the principal (i.e., lowest) resonance frequency approaches the second harmonic. For SCR equal to two, the resonance may even be below the second harmonic.

The exact resonant frequency will of course be a function predominately of the ac system Thevenin equivalent impedance (inductive) and the ac filters that are capacitive at all frequencies below their lowest resonant frequency.

It should be noted that not only the magnitude but also the phase angle of the impedance will be significant at any given frequency.

All long-distance dc transmission schemes have dc lines or cables that, with dc reactors, exhibit various resonances. Because a convertor can be considered (approximately) as a voltage source at its dc terminals, it is the minimum impedance on the impedance versus frequency curve for the dc system that is significant, as this will lead to a high harmonic current. Again, any calculations must consider both characteristic and noncharacteristic harmonics; in this case, the characteristic voltage harmonics are of order $n = pk$. The impedance phase angle should again be considered in any calculations at a given frequency. The existence of the "remote" dc station will have little effect at twelfth harmonic and upwards for a long line or cable scheme, but for lower frequencies (e.g., fundamental or second harmonic), it can have a strong effect. The concept of "resonance" for the dc system in isolation is therefore not valid, and studies must always include both dc stations.

In addition to the generation of characteristic harmonics convertors may, under some circumstances, generate all other harmonics. Among the reasons for this are the following:

a) Unbalanced firing pulses due to control system errors
b) Unbalanced impedances; e.g., ac system, filters, transformers, and untransposed lines
c) Harmonics from other sources both on the ac and the dc sides, such as other convertors, machines, static compensators, and loads
d) Saturation of convertor transformers or other nearby transformers

Since harmonic resonances can exist on either side of the convertor, it follows that each of the prime sources as above may be subject to magnification on either the ac or dc side of the convertor.

The distinction from instability, in this case, is that effect is proportional to the cause, and if the cause (e.g., an extraneous EMF in an ac system) vanishes, then so does the effect.


Copyright © 1997 IEEE. All rights reserved.
Copyright The Institute of Electrical and Electronics Engineers, Inc.
Provided by IHS under license with IEEE
No reproduction or networking permitted without license from IHS
Not for Resale

### 5.2.3 Harmonic transfer through convertors

A dc convertor acts as a modulator to harmonics. If a harmonic exists on the ac side of a convertor, it will transfer this harmonic through the convertor, giving side-band harmonics on the dc side. For example, a second harmonic voltage on the ac side will give fundamental and third harmonic currents on the dc side. Similarly, a dc side harmonic will transfer through to the ac side as side-bands. For example, fundamental frequency on the dc side will give dc and a second harmonic on the ac side (valve windings). This modulation is also true for non-integer harmonics in both directions.

It follows, therefore, that the ac and dc systems are effectively coupled at both integer and non-integer frequencies; this coupling must be accounted for in all calculations. The substantial coupling that can occur through the dc system, as in back-to-back schemes, or in long line schemes at low frequencies (below third harmonic), effectively extends all the way from one ac system to the other, via the dc link.

## 5.3 Harmonic resonance-related instabilities and solutions

In the introduction it was suggested that any problem associated with resonances and instabilities might be influenced by several factors. These can include ac or dc side resonances, harmonic amplification, transfer of harmonics through--convertors, the generation of harmonics by other plants, and non-theoretical harmonic generation. In addition, any problems encountered may also be affected by such parameters as control loop transfer functions and the saturation of convertor transformers or other local transformers. It is, therefore, often difficult to define exactly which parameters are dominating the effects seen in practice; this makes groupings and classifications difficult.

The following groupings are made with this in mind. The changes that were made to controls and plant to alleviate these problems are also described.

### 5.3.1 Core saturation instability

Chronologically, the first harmonic instability to be described that was not a simple loop instability was the so called “core saturation instability.” This particular problem involved the mild saturation of the convertor transformers by a small amount of direct current on their secondary sides. Problems have since been experienced on other schemes that have also involved the saturation of the convertor transformer. The mechanism of the instability is different in each case, but they are grouped together here because of the common element of core saturation. To date, this type of problem has been experienced on four systems; namely, the Kingsnorth, Nelson River, New England, and Chateauguay schemes. A more detailed explanation of each problem is given below with the attempted solutions. Another feature of this type of instability is that there may be “complementary resonances” on the ac and dc side of the convertors. In some schemes this has proved to be the major driving force. These schemes have, therefore, been grouped together under the next grouping of complementary resonances also.

If a dc system is resonant at an integer harmonic frequency then it may possibly be susceptible to core saturation instability. The system does not in fact have to be exactly on resonance at an integer harmonic. Depending upon the $Q$ factor of the system, a “near resonance” will also give the type of problems discussed here. In this type of phenomena, which can occur with a single-sided resonance or with complementary resonances (the latter being potentially more vulnerable), the source of the harmonic excitation is a saturated convertor transformer that supplies all integer harmonics to the system.

There are two ways in which this type of instability can be excited. The first, which is a true instability in that it will start from an infinitesimally small excitation, occurs when a dc scheme that has a second harmonic ac resonance is excited by a second harmonic of very small amplitude. One of the possible results of such a magnification, as described previously, is that the ac fundamental will exist on the dc side of the convertor. This fundamental on the dc side will in turn produce dc and the second harmonic on the valve winding side of the

Copyright © 1997 IEEE. All rights reserved.

Copyright The Institute of Electrical and Electronics Engineers, Inc.
Provided by IHS under license with IEEE
No reproduction or networking permitted without license from IHS
Not for Resale

convertor transformer. The dc component will saturate the transformer, producing (among other frequencies) the second harmonic, which will further contribute to magnification, and thus force the system into instability. The original small excitation then becomes irrelevant and the instability is now driven by the new source of excitation, namely the saturated transformer. This type of instability is characterized by a slow build-up of harmonics taking perhaps seconds or even minutes. The slow build-up is a function of the manner in which dc builds up in the transformer secondary winding and the ac system. Examples of this type of instability have been reported on at least four schemes to date.

The second type of core saturation instability is similar but cannot start spontaneously; i.e., it is stable in the steady state until the transformers are suddenly excited by a transient. The system will then jump relatively suddenly to the steady unstable mode. This requires a large transient in the ac system such that the convertor transformers can become saturated. Three examples of this type of excitation are (1) energization of the convertor transformer producing inrush current, (2) blocking of part of a multipolar scheme producing an overvoltage and hence transformer saturation, and (3) commutation failure producing transformer saturation. When the transformer is saturated in this way there is always the danger of harmonic resonances causing harmonic amplification of temporary overvoltages (this is discussed in Clause 4). A second consequence might be the induction of core saturation instability as described. The saturated transformer can excite resonances with the ac and dc systems leading to a build-up of harmonics on both sides of the convertors. This type of instability has been reported on at least two schemes.

In principle, core saturation instability can be cured by a suitable choice of a control system and its associated frequency response. However, this can lead to control parameters that are unsuitable at other frequencies; e.g., subsynchronous. Hence, for minimizing core saturation instability while avoiding subsynchronous difficulties, an auxiliary loop can be placed in parallel with the main control.

Two versions of auxiliary control have been used. The first was used in the Kingsnorth and Nelson River schemes. These schemes both exhibited fundamental frequency resonance on the dc side. In these schemes, second harmonic components of primary magnetizing current are measured, demodulated to dc, passed via control integrators, and then remodulated to ac by multiplying variable fundamental frequency waveforms (from valve winding currents) to inject back into the main control.

The second method was used in the 2 × 500 MW back-to-back link between the Hydro-Quebec and New York Power Authority systems at Chateauguay, which has a second harmonic resonance on the New York ac side. The solution adopted was to process the measured fundamental component on the dc side to obtain a modulation signal that, when applied to the rectifier controls, counteracted the dc fundamental component. This sufficiently reduced the dc component in the inverter transformer secondaries to eliminate second harmonic build-up in the inverter ac system. The inverter control was left running on equidistance pulse spacing.

### 5.3.2 Complementary resonances

If a resonance exists or the impedance is high on the ac side at, say, the second harmonic and, at the same time, a resonance (or low impedance) exists on the dc side at fundamental frequency, there is the possibility that this could lead to a harmonic problem.

Suppose that a small amount of second harmonic exists on the ac side. This will transfer through as fundamental and the third harmonic on the dc side. The fundamental dc side voltage feeds the low dc side impedance, giving a current on the dc side that includes a fundamental frequency component. This fundamental component will, in turn, cause a second harmonic and a dc component to be generated on the ac side. This now sees a high impedance because of the ac side resonance, giving a higher component of second harmonic on the ac side. This will add to the second harmonic that was already there—this is the classical feature for a harmonic build-up. In a more general form, if the dc resonance is of low impedance near a frequency $f$, and an ac system high-impedance resonance is near ($\pm f \pm f_o$) where $f_o$ is ac system frequency, then the resonances are complimentary. This type of build-up has been reported on at least three schemes.


Copyright © 1997 IEEE. All rights reserved.
Copyright The Institute of Electrical and Electronics Engineers, Inc.
Provided by IHS under license with IEEE
No reproduction or networking permitted without license from IHS
Not for Resale

To date, two schemes have been reported as having experienced complementary resonances that were of an integer nature.

One case of non-integer complementary resonance has been reported from the Nelson River scheme, where the ac system natural frequency was 153 Hz. Following deblocking, a sustained 93 Hz oscillation was measured on the dc side. This was studied and found to be associated with a ground mode resonance on the dc side of 93 Hz. This was solved by a simple control that introduced damping at the appropriate frequency.

### 5.3.3 Harmonic coupling between ac systems joined by dc links

In general, dc schemes are asynchronous ties, either joining systems of the same nominal frequency or systems of different frequencies (the exception being systems with parallel ac lines). The dc interconnection is either a long overhead line, or a dc cable, or of zero length (a back-to-back scheme). On the dc side of the convertor, a range of harmonic voltages are generated in addition to the desired dc voltage; the principal components are generated in addition to the desired dc voltage; the principle components are of order $12k$, where $k = 1, 2, 3...$ for a normal 12 pulse dc scheme. These voltages will cause currents of a low amplitude to flow on the dc side and hence to the convertor at the other end. This convertor will transfer the harmonics through as side-band frequencies. These side-band frequencies are non-integer if the two systems are asynchronous. The resulting currents thus injected into the ac systems are of very low value and will, in the majority of cases, be insignificant and virtually undetectable.

In order to give guidance on the problem, typical figures have been extracted from Jotten. Let the two system frequencies be $f_1$ and $f_2$. Then, assuming 12 pulse convertors, the frequencies of cross-modulation torques in each system are at frequencies of $12k\ (f_1 - f_2)$ where $k = 1, 2, 3, \ldots$

Consider a typical example. If a dc link connects two systems that are at the same nominal frequency and if the system frequencies differ by up to 0.75 Hz, then torsional oscillations will be generated on the shaft of both connected ac systems at frequencies of 9 Hz, 18 Hz, 27 Hz, etc. These are in the frequency range where turbo alternator shafts could be put at risk.

Back-to-back schemes are probably most at risk from this problem because of the close intercoupling of the terminals. With long dc transmission lines and cable systems, the cross-modulation should be reduced by the line capacitances and inductances.

The two exceptions to this conclusion are where there are resonances with a high $Q$ factor in the ac system. These could take two forms, either electrical or mechanical. If an electrical resonance exists at one of the corresponding real frequencies, a harmonic magnification will take place. The $Q$ factor of an electrical resonance is unlikely to be very high, hence this effect will not usually be important.

The second form of resonance, a mechanical resonance, may be more significant. Such a resonance with a very high $Q$ factor exists in alternators in thermal sets and to a lesser extent in hydrogenerators. This is the torsional shaft resonance caused by the large masses on a turbo-alternator shaft and the extremely low associated damping.

A modulation frequency generated by dc cross-modulation could coincide with one of the shaft torsional natural frequencies when transferred through the electrical generator, (again as modulation side-bands). Then a build-up of torsional oscillations could occur in the turbo-alternator shaft, perhaps leading to shaft fatigue problems and damage. This phenomena is similar to the torsional oscillation described in Clause 6. The mechanism of build-up is, however, different. To date, no reports have been received of cross-modulation causing shaft damage. The implications of such a problem, however, are large, and it is recommended that turbo-alternators that may be at risk should be monitored.

In considering this problem it should be emphasized that the amplitudes of injection harmonics are very low. However, it has been reported (Fick 1982 [B31]) that an excitation of only 350 kW at a low frequency

Copyright © 1997 IEEE. All rights reserved.

Copyright The Institute of Electrical and Electronics Engineers, Inc.
Provided by IHS under license with IEEE
No reproduction or networking permitted without license from IHS
Not for Resale

caused a 720 MW alternator to be put at risk in one scheme involving a slip energy recovery system in a power station. A slip energy recovery system under these conditions is electrically identical to an asynchronous dc scheme.

It has been suggested by *The Electrical Transmission and Distribution Reference Book* [B26] and Woodford et al. 1983 [B84] that a level of 0.1% of cross-modulated injection might be possible, which is about twice that of the example previously given.

### 5.3.4 Harmonics and static var compensators

SVCs both of the SR type and the TCR type can be considered as sources of harmonics on an ac system.

All of the previous arguments about the excitation of harmonic resonances and the production of noncharacteristic harmonics under unbalanced systems will apply. Any harmonic studies that are carried out on a simulator or computer program should include the effect of SVCs.

On the Chateauguay scheme, when the problem on the dc system had been controlled by modulating the rectifier, it was found that operating restrictions could not be removed completely because a similar problem occurred with the controls of the static var compensator located on the same inverter bus.

The manufacturer of the SVC will also be implementing a control solution to the problem.

In the meantime, Hydro-Quebec wanted to increase its export capacity to the full capacity of the single 765 kV line to New York. Load-flow studies of the New York system indicated that in order to achieve this, an additional 270 Mvar of reactive power compensation would be required at Chateauguay. It was decided to install this in the form of two 135 Mvar damped second harmonic filters.

Although not strictly required to resolve the control problems, these filters were seen to have the advantage of essentially eliminating second harmonic transient overvoltages and therefore reducing arrester stresses. At the same time, these second harmonic filters will permit the existing operating restrictions to be removed for the critical peak load period in the winter of 1988/1989. When the SVC control solution is implemented, tested, and accepted it is expected that there would be no need for the existing operating restrictions, even without the second harmonic filters.

### 5.3.5 Parallel ac/dc transmission lines

If a dc line runs in parallel with an ac line in the same right-of-way or if an existing ac line is converted to dc, then fundamental voltage will be induced on the dc side.

It might be thought that control action could also be used to eliminate the problem. This is not necessarily the case. The fundamental frequency EMF induced on the dc line will cause a fundamental frequency component in the dc line, if control actions are disregarded. This will produce transferred harmonics on the ac side that will include dc and the second harmonic. This dc component will saturate the convertor transformer and reinforce the already-generated second harmonic. To complete the steady-state higher harmonics, the sidebands of the theoretical harmonics will also be present.

It is possible, by control means, to reduce or eliminate the fundamental frequency component on the dc side by modulating the convertor firing angle using the type of feedback circuits used on Chateauguay to cure core saturation instability.

However, in practice, this is not an ideal solution, because the modulation of alpha in a fundamental frequency pattern gives both dc saturation of the convertor transformers and high amounts of harmonics on the ac side. Thus, nothing is gained by using controls in this particular case, and measures such as the provision of filters on the main circuit must be taken.


Copyright © 1997 IEEE. All rights reserved.
Copyright The Institute of Electrical and Electronics Engineers, Inc.
Provided by IHS under license with IEEE
No reproduction or networking permitted without license from IHS
Not for Resale

## 5.4 Factors influencing harmonic problems

The factors that will affect the harmonic magnification and harmonic instabilities described previously include the following:

a) High impedance resonances on the ac side
b) Low impedance resonances on the dc side
c) Complementary resonances
d) AC system voltage unbalance (negative sequence)
e) AC system impedance unbalance
f) Extraneous frequencies from the ac system
g) Extraneous frequencies from the dc system (normally originating in the remote ac system)
h) Coupling from an ac line to a dc line
i) Convertor control system unbalance errors
j) Transformer saturation
k) Control feedback

## 5.5 Trends and sensitivities of system parameters

The parameters that will have the biggest influence on harmonic resonances on the ac side are the strength (impedance) of the ac system, its impedance angle, and the size of the harmonic filter. On the dc side, the size of the dc reactor, the presence of dc filters, and the inductance and capacitance of the line will dominate.

As a guide, the lowest parallel resonance frequency on the ac side can be found approximately from:

$$f_{(\text{res})} = f_1\sqrt{S/Q_c} \tag{23}$$

where

$f_1$ is the fundamental frequency
$S$ is the short-circuit capacity of the ac system in MVA
$Q_c$ is the size of the filter and shunt capacitor bank in Mvar

provided the resulting value of $f_{(\text{res})}$ is well below the lowest tuned filter frequency.

In a typical dc scheme, $Q_c$ is normally dimensioned to compensate fully for convertor var consumption $Q_{\text{d}}$. $Q_d$ normally has a value between 0.5 and 0.6 of dc power, $P_d$. For $Q_c = Q_d = 0.5P_d$, the above equation can be expressed in terms of SCR as follows:

$$f_{(\text{res})} = f_1\sqrt{S/0.5P_d} = f_1\sqrt{2 \cdot \text{SCR}} \tag{24}$$

For the conditions assume the resonant frequency will be equal to the second harmonic for SCR = 2.

Once the system impedances have been decided, the trends and sensitivities will be dominated by the controller as described previously.

## 5.6 Methods of study

There are at present basically three methods of carrying out the type of study needed to solve the problems described.

--`,,`-`-`,,`,,`,`,,`---
Copyright © 1997 IEEE. All rights reserved.

Copyright The Institute of Electrical and Electronics Engineers, Inc.
Provided by IHS under license with IEEE
No reproduction or networking permitted without license from IHS
Not for Resale

The first method uses the HVDC simulators (physical models). These are suitable for the study of large-amplitude disturbances.

The second method consists of time domain studies by computer. Computer packages, such as the electromagnetic transient programs, have been specially designed for this use.[5]

The third method of analysis uses frequency domain methods.

The type of study carried out will vary depending partly on the problem to be solved and partly on the availability of study tools.

## 5.7 Different types of schemes and harmonic problems

For types of schemes other than point-to-point transmissions, the underlying mechanisms and physics are the same. In the following subclauses, only those aspects that are specific or of special importance for the other types of schemes are discussed.

### 5.7.1 Back-to-back schemes

These have a relatively restricted dc system, usually comprising only a dc reactor. The effective dc system loop impedance is that of the dc reactor plus summed commutation reactances plus transferred ac system impedance effects. In some cases, no dc reactor is used; the remaining effects ensure that effective loop impedance is still substantial.

At subsynchronous frequencies the effective ac loop impedance is low, which is a substantial advantage for stability at such frequencies. For avoidance of core-saturation instability, the absence of fundamental frequency resonance on the dc side is an advantage, though back-to-back schemes have still exhibited core-saturation instability due to near-second-harmonic resonance on the ac side. At low-order harmonics, the usual harmonic effects are generally not much different from long-line schemes. However, there is a substantially greater harmonic transfer effect from one ac system to the other, so that, for example, a negative-sequence fundamental component in one ac system goes through a double transformation to contribute a small amount of negative sequence fundamental and third harmonic to the other ac system.

### 5.7.2 Multi-infeed schemes

For multi-infeed schemes, the harmonic interaction not only takes place through the convertors, but also through the ac network. The complexity of the situation is thus enhanced. In order to analyze the risks for adverse interaction, all dc schemes that are electrically close must be considered. It is possible that the performance when each scheme alone is in operation is acceptable; however, operation with two or more dc systems gives unacceptable performance if no corrective measures, in the control or by equipment, are taken.

### 5.7.3 Multi-terminal schemes

The considerations concerning harmonic resonances for multi-terminal schemes are basically the same as for point-to-point transmission and multi-infeed schemes if ac coupling exists between the terminals. But, due to the complexity of the dc side system in multi-terminal schemes, there may be more harmonic resonances on the dc side. A careful design of dc filters is necessary also with regard to the choice of their location and the smoothing reactor values so as to meet filter performance requirements.

It is also obvious that a number of operating configurations exist, and a careful analysis of all these are necessary.

---

[5]Examples of widely available proprietary software of this kind are EMTP, EMTDC, NETOMAC, SPICE, and SILVER LISCO.


Copyright © 1997 IEEE. All rights reserved.
Copyright The Institute of Electrical and Electronics Engineers, Inc.
Provided by IHS under license with IEEE
No reproduction or networking permitted without license from IHS
Not for Resale

### 5.7.4 Low- and zero-inertia systems

For a dc infeed into a low- or zero-inertia ac system, a synchronous compensator is used on the inverter side. Besides providing the necessary commutation voltage or enhancement of the existing ac system strength, the synchronous compensator partly compensates for the reactive power consumed by the dc convertor. This is generally similar to more conventional schemes, except that the ac system impedance viewed from the convertor is dominated by the synchronous compensator and may be relatively high.

## 5.8 Comments

In several of the schemes built to date there have been harmonic problems at some stage of development. In most cases, these problems have been overcome by additions to the controllers. The additional control circuits are relatively inexpensive, especially if considered early in the design stage of a project. Thus, careful consideration should be given to the possible need for such circuits.

# 6. Subsynchronous torsional interactions between dc convertors and nearby turbine-generators

## 6.1 Introduction and summary

The potential for subsynchronous torsional interactions between a dc transmission system and nearby turbine-generators was first experienced during field tests at the Square Butte DC System in North Dakota. This dc system employs a supplementary frequency-sensitive power controller (FSPC) to damp out low frequency electromechanical oscillations between the sending end and the receiving end systems. Prior to the test, it was suspected that the FSPC had enough residual gain to stimulate torsional oscillations in one of the generators at the sending end.

The test confirmed that the FSPC did interact and destabilize the first torsional mode of one of the units (11.5 Hz). To the surprise of everyone, however, it was also found that the dc current control acting without the FSPC was enough to destabilize the first torsional mode upon loss of one of the ac transmission lines. Thus, it was observed that dc control systems can interact with a turbine-generator rotor and exert a destabilizing influence on a torsional mode of oscillation, even in the normal mode of control without supplementary damping signals.

Field modifications were initially made that allowed stable operation under limited conditions. These were immediately followed by an analysis of the interaction that led to control system modifications that allowed stable operation under all but extreme system contingencies.

Following this development, the Electric Power Research Institute (EPRI) initiated a research project to investigate this phenomenon and to develop generic solutions (EPRI EL-2708 [B28]). In the project, it was found that negative damping to turbine-generator torsional modes of oscillation is inherent to the objective of controlling current in a dc transmission system. Some degree of negative damping will exist within the bandwidth of this current control, and torsional vibrations at frequencies higher than the bandwidth of the current control will experience positive damping. This was the case with the CU dc system in North Dakota, which was extensively tested in the summer of 1979. The CU dc system is located adjacent to a power plant, for which the turbine-generator units have a first torsional mode frequency of 19 Hz, considerably higher than the 11.5 Hz of the unit near Square Butte. This 19 Hz frequency was just beyond the range of negative damping caused by the current control.

The outcome of the EPRI research project has also shown that the interaction is sensitive to many system parameters, most significantly, ac system strength, dc power, and the control mode of the dc system. Maximum

Copyright © 1997 IEEE. All rights reserved.

Copyright The Institute of Electrical and Electronics Engineers, Inc.
Provided by IHS under license with IEEE
No reproduction or networking permitted without license from IHS
Not for Resale

interaction occurs with the weakest ac transmission system, especially in the limiting case of an isolated turbine-generator whose only load is a dc convertor. It has also been shown that special dc power modulation control for damping electromechanical modes of system oscillation can cause significant subsynchronous torsional interaction and may require appropriate control filtering to limit the interaction at critical torsional frequencies.

One method to mitigate the torsional interaction is by varying the frequency range and magnitude of the negative damping associated with the rectifier current control loop. This can be achieved, within a fairly limited range, by modifying the characteristics of the current control loop. Otherwise, a supplementary damping control device may be required to assure torsional stability of all units in the area.

The methodology for designing a supplementary subsynchronous damping control (SSDC) was developed under the EPRI project, and its performance and robustness have been demonstrated by both digital computer programs and dc simulators. Such a controller would ensure net positive damping contributions to torsional modes of oscillations for all turbine-generators in the vicinity of the dc system. The project also developed practical guidelines in determining the need for an SSDC in dc systems.

In this subclause, the considerations involved in deciding whether to add subsynchronous damping control are discussed, along with considerations for turbine-generator protection against torsional vibrations. Inasmuch as the solution to the torsional interaction consists of a control modification, adopting such a solution has only a minor impact on overall system costs and should have no influence on decisions with respect to location and ratings of major equipment.

## 6.2 Description of the phenomenon

Turbine-generator rotor motion causes variations in both magnitude and phase angle of the ac voltage supplying the convertor. The effect on convertor firing angle caused by an angular shift in the voltage waveform is illustrated in Figure 6-1. For the equidistant firing angle control, utilized in modern dc systems, a shift in voltage phase, $\phi$, causes an equal shift in the apparent firing angle, $a$, away from the steady-state pre-shift firing angle, $a'$. The apparent change in firing angle, as well as variations in the voltage magnitude, will result in changes in direct voltage and current, and thereby dc power transfer. Meanwhile at the terminal, a closed loop control on direct current, direct voltage, or firing angle would respond to correct for these changes, thereby impacting the magnitude and phase of variations in dc power transfer. The ultimate effect of the change in dc power is a change in the generator electrical torque. If the accumulated phase lags between the change in the generator shaft speed and the ultimate resulting change in electrical torque on the generator rotor exceed 90°, the torsional oscillations may become unstable.

## 6.3 Principal parameters

The ability of a dc system to impact torsional oscillations of a nearby generator unit is, of course, dependent upon the relative size of the dc system compared to the unit, as well as the electrical distance from the convertor to the unit. dc transmission from a remote, somewhat isolated power plant would likely interact with the generator torsional modes, while a dc interconnection of relatively large networks may not be prone to this condition.

Based on the results of the EPRI research project, the influence of dc control on torsional damping of a particular generator can be quantified by unit interaction factor (UIF) as the following:

$$\mathrm{UIF}_g = \frac{\mathrm{MW}_{\mathrm{dc}}}{\mathrm{MVA}_g} = \left[1 - \frac{\mathrm{SC}_g}{\mathrm{SC}_{\mathrm{tot}}}\right]^2 \tag{25}$$


Copyright © 1997 IEEE. All rights reserved.
Copyright The Institute of Electrical and Electronics Engineers, Inc.
Provided by IHS under license with IEEE
No reproduction or networking permitted without license from IHS
Not for Resale

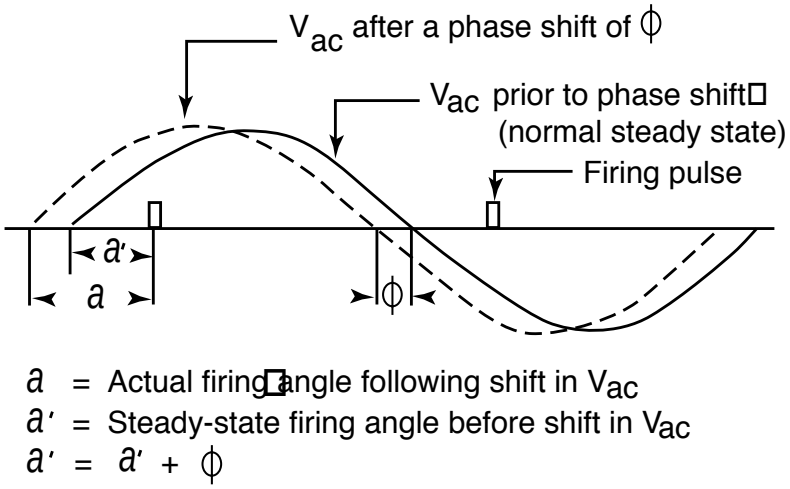


**Figure 6-1—Effect of alternating voltage phase shift on firing angle with equidistant firing control**

where:

$UIF_g$ is the unit interaction factor of the generator

$MW_{dc}$ is the rating of the dc system

$MVA_g$ is the rating of the generator

$SC_{tot}$ is the short-circuit capacity at the dc commutating bus *including* the generator

$SC_g$ is the short-circuit capacity at the dc commutating bus *excluding* the generator

For unit interaction factors less than about 0.1, there is very little interaction between the dc controls and the turbine-generator torsional oscillations. Hence, an SSDC would not be required to solve a potential destabilization problem, nor would an SSDC significantly enhance the torsional fatigue loss-of-life of the generator.

It is noteworthy that the subsynchronous torsional interaction phenomenon is particular to steam turbine-generators. Hydraulic turbine-generators do not experience the same kind of problem. It has also been found that only units near a rectifier terminal are vulnerable to torsional interactions. The units near an inverter terminal do not experience much destabilization. This is due to the fact that rectifiers and inverters react differently to phase angle variations. In addition, it would be unlikely to have network situations with units weakly connected to the ac system at the inverter end of a dc transmission link. If there were turbine-generators near the inverter terminal, one would normally expect that there would be load in the area sufficient to provide damping for subsynchronous oscillations.

It should also be noted that another possibility for adverse torsional oscillations in nearby units has been mentioned in the literature (see Stemmler 1987 [B74]). This possibility has been surmised from a design consideration in the field of variable speed drive systems, in which care must be taken to avoid excitation of various oscillatory modes in associated mechanical systems by harmonics generated by the electrical conversion systems. In dc system applications, the transfer of harmonics from one end of the dc link to the other may possibly result in steady-state oscillations that could excite torsional modes of nearby turbine-generators. Such a phenomenon has not been observed to date; nevertheless, its possibility is fully discussed in 5.3.3 of this guide.

Copyright © 1997 IEEE. All rights reserved.

Copyright The Institute of Electrical and Electronics Engineers, Inc.
Provided by IHS under license with IEEE
No reproduction or networking permitted without license from IHS
Not for Resale

## 6.4 Trends and sensitivities of system parameters

During the field tests at the Square Butte facility, it was found that the instability of the torsional mode of oscillation depended on the power level of the dc line and upon the number of ac transmission lines in service. Either reducing the dc power level or closing in another transmission line was found to eliminate the instability. This was confirmed by analytical results that matched measured test conditions. Figure 6-2 and Figure 6-3 show families of curves where ac system strength and dc power level, respectively, are varied for the simple parallel ac/dc system of Figure 6-4.

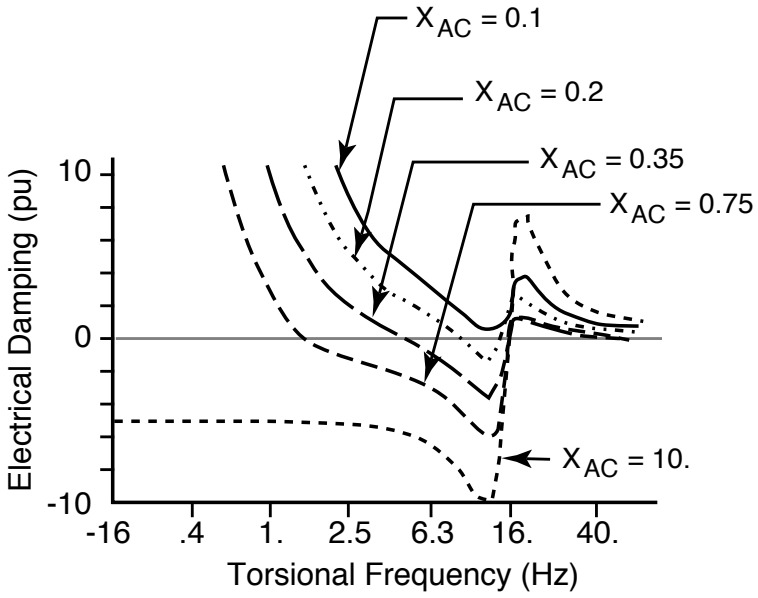


**Figure 6-2—Plot of electrical damping versus torsional frequency for several levels of ac system strength, $X_{AC} \cdot P_{DC} = 1.0$ pu**

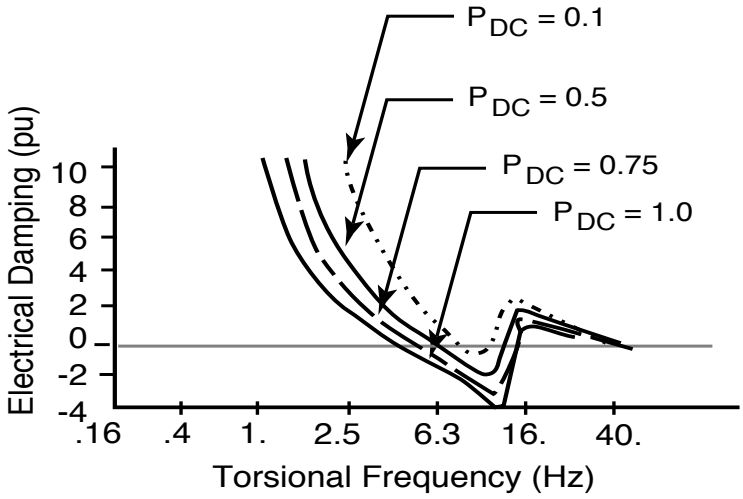


**Figure 6-3—Plot of electrical damping versus torsional frequency for several levels of ac system strength, $X_{AC} \cdot P_{DC} = 1.0$ pu**


Copyright © 1997 IEEE. All rights reserved.
Copyright The Institute of Electrical and Electronics Engineers, Inc.
Provided by IHS under license with IEEE
No reproduction or networking permitted without license from IHS
Not for Resale

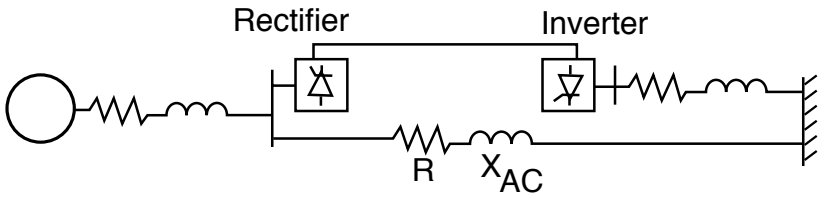


**Figure 6-4—Simplified system representation for sensitivity studies, $X_{AC}/R = 7$**

The destabilizing effect of the dc system increases as the parallel ac system weakens, since as the ac system becomes weaker, the inherent positive damping of the ac system diminishes and the coupling between the dc line and the turbine-generator increases. Hence, the worst case in terms of torsional interaction with dc systems is the maximum dc power with the weakest conceivable ac system. As a point of reference, the turbine-generator located near the Square Butte terminal became torsionally unstable when the negative damping contribution exceeded 2 pu at the torsional frequency of 11.5 Hz. It can be seen from Figure 6-2 that for rated dc power transfer in a nearby radial configuration ($X_{AC}$ = 10 pu), the negative damping contribution is in the neighborhood of 10 pu at 11.5 Hz, thereby creating an unstable condition.

The nominal firing angle at which the rectifier operates also has a substantial influence on the damping effect of the convertor. Operation at relatively large nominal firing angles would tend to increase the destabilizing impact of the convertor. This is an important consideration for dc links that are required to operate at a reduced direct voltage where both the rectifier firing angle and the inverter extinction angle are increased above their nominal steady-state values. Such operating modes may thus drastically increase the negative damping effect of the convertors at torsional frequencies.

Other factors impacting the torsional interaction are the gain and time constant of the exciter and the power system stabilizer, if any, on nearby generators. It has been observed on the Cross-Channel Link that a very small time constant of generator speed measurement would result in a reduced electrical damping at critical torsional frequencies. Increasing the measurement time constant to effectively reduce the speed loop gain at torsional frequencies would solve the reduced electrical damping problem.

## 6.5 Influence of dc controls

The interaction observed at the Square Butte project occurred through two different control paths: FSPC and the current control. In the case of FSPC, the interaction was due to high gain and large phase lag in the lower range of the subsynchronous torsional frequency region. Only one of the units near the rectifier terminal had a torsional frequency low enough to interact with the FSPC. The first torsional mode frequency of the other unit was high enough so that a negative damping interaction did not occur. Thus, for this situation, notch filtering of FSPC at 11.5 Hz was an effective and appropriate method of eliminating interaction through that control path. A double notch filter with frequencies staggered about the torsional frequency of 11.5 Hz was installed. Tests showed safe operation of FSPC for all system conditions.

Solution of the torsional instability through the current control path was not quite as easy. In fact, analysis showed that negative electrical damping to turbine-generators near rectifier terminals was inherent to the objective of controlling dc current, resulting in a degree of negative electrical damping over some frequency range. The analysis also showed that torsional oscillations at frequencies higher than the bandwidth of the current control will experience positive damping. This was the case with the CU dc system for which the nearby turbine-generator units have a first torsional mode frequency of 19 Hz, considerably higher than the 11.5 Hz of the unit near the Square Butte dc tie.

Although it may not be possible to totally eliminate the negative electrical damping, it is possible to minimize the magnitude of the interaction at the frequencies at which the negative damping occurs. This

Copyright © 1997 IEEE. All rights reserved.

Copyright The Institute of Electrical and Electronics Engineers, Inc.
Provided by IHS under license with IEEE
No reproduction or networking permitted without license from IHS
Not for Resale

approach was taken at Square Butte, for which analysis showed that the dc current regulator could be adjusted to maintain torsional stability for all anticipated system operating conditions without degrading the response of the dc system. The control system was modified accordingly, and subsequent field tests showed that the changes resulted in stable operation.

### 6.5.1 Subsynchronous damping control (SSDC)

The SSDC concept developed in EPRI EL-2708 [B28] consists of a wide bandwidth controller sensitive to generator speed if available, or to the frequency of an ac signal synthesized from voltage and current measured at the dc convertor terminal. With such a design, the SSDC can be made to provide a positive damping contribution over the entire range of subsynchronous torsional frequencies, as indicated in Figure 6-5. This figure represents the damping influence of an isolated turbine-generator whose only load is a dc convertor. For this particular system, negative damping exists up through 30 Hz without an SDCC, but with the SSDC, the damping characteristic changed to positive damping for frequencies above 5 Hz.

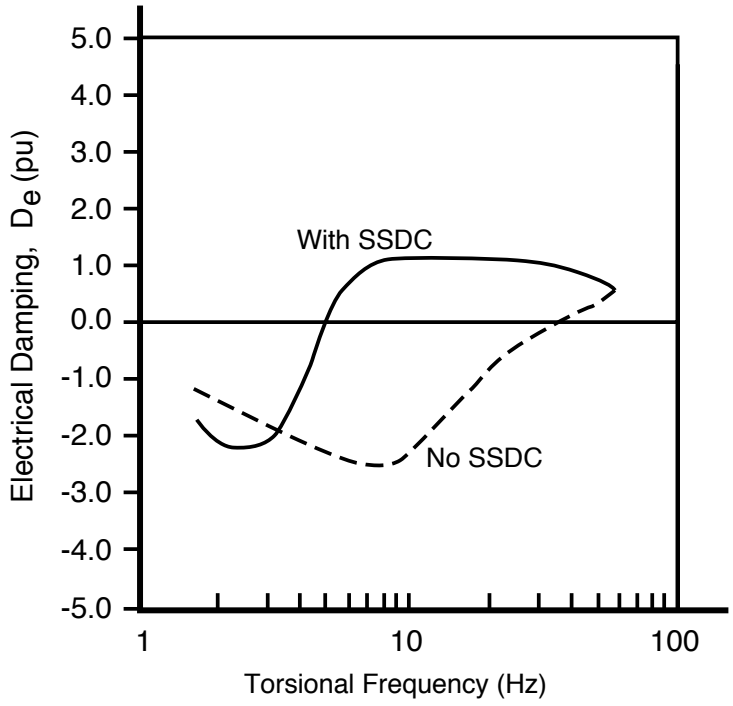


**Figure 6-5—Impact of practical SSDC on electrical damping**

Such a control was tested on a dc simulator. The configuration consisted of a turbine-generator unit connected solely to a dc transmission system. The turbine-generator unit had two torsional modes at 13.5 and 22 Hz. Significant test results demonstrated that an SSDC can be built to provide positive damping to torsional vibrations over a wide frequency range. Very little modulation of the system is required.

Another method of damping torsional oscillations is to modulate the firing instant with a suitable phase and amplitude with regard to the generator oscillations. The input signal for this modulation can be derived either from the speed of the generator or from the bus frequency. In the case of using the generator speed as the input signal, the only required signal processing is to pass the signal through a bandpass filter to eliminate the low intermachine oscillation frequencies and the high-frequency noise. Considerable positive damping contributions may be achieved in the subsynchronous torsional frequency range with such a damping method. However, in some applications, it may not be possible to use such a wide bandwidth damping controller. In these situations, it might be possible to focus on one torsional mode at a time by using bandpass


Copyright © 1997 IEEE. All rights reserved.
Copyright The Institute of Electrical and Electronics Engineers, Inc.
Provided by IHS under license with IEEE
No reproduction or networking permitted without license from IHS
Not for Resale

filtering techniques. Bibliography entry no. 13 indicates that in case of the bus frequency as input, in order to overcome the inherent delay associated with the frequency measurement, the signal is passed through a narrow bandpass filter tuned to one torsional frequency. Therefore, positive damping may only be provided for that particular torsional frequency.

The first consideration in applying an SSDC is whether it is needed to solve a potential problem associated with dc destabilization or whether it can significantly reduce fatigue damage per event on adjacent turbine-generator units. The research results have indicated that units near an inverter terminal are not likely to suffer destabilization; indeed, for some combinations of torsional frequencies and dc control characteristics, the inverter control action actually improves the damping somewhat as compared to a pure ac transmission system. Thus, only units near a rectifier station need to be considered.

### 6.5.2 Impact on planning for systems with dc transmission

Planning for the location and size of major transmission and generation facilities should not be influenced by concerns over the existence of the dc torsional interaction phenomenon. Major equipment items can be chosen and cited for optimum economics while considering advantages of dc power control in steady-state and transient stability characteristics of the transmission system. The only influence of torsional interaction control is a potential side benefit by reducing fatigue duty on the turbine-generator shaft. This is a contrast to the problems associated with series-compensated ac transmission systems, where the SSR interaction can limit the amount of power transfer through an ac line or require additional pieces of major equipment to allow higher levels of compensation. The torsional interaction with dc systems can be mitigated relatively simply by including appropriate controls with a negligible impact on the overall cost of the system.

After the major equipment has been chosen, studies should be initiated to determine the need for an SSDC. Preliminary screening studies involving UIF calculations should be conducted for all conceivable system contingencies. Results of this screening study are often sufficient to determine whether an SSDC should be included in the equipment specification. Since the interaction is dependent upon the exact characteristics of the controls, detailed studies should await vendor selection.

### 6.5.3 Turbine-generator protection

Protective relays are available to protect against turbine generator instabilities caused by the transmission network. For example, relays have been applied to each of the Coal Creek turbine generators, near the CU HVDC system, as a backup in case of control system failure, which could cause torsional instability. These relays use generator speed as an input to detect torsional oscillations and trip the associated unit when oscillations become excessive.

It should be noted that SSDC is not a protection device. It is simply a control device that allows stable operation in situations where, because of torsional interactions, it was not possible to operate. Thus, it is prudent to provide protective torsional relays to any nearby unit that may adversely interact with the convertor.

## 6.6 Methods of study

The combined ac/dc system can be visualized in block diagram form as shown in Figure 6-6. It is instructive to open the loop shown in the figure at the electrical torque feedback point and to calculate the transfer function from generator rotor speed, $\Delta w_G$, to electrical torque, $\Delta T_e$, which consists of effective damping and synchronizing coefficients as

$$\frac{\Delta T_e}{\Delta w_G}(jw) = D_e(w) - j\frac{w_b}{w}K_e(w) \tag{26}$$

Copyright © 1997 IEEE. All rights reserved.

Copyright The Institute of Electrical and Electronics Engineers, Inc.
Provided by IHS under license with IEEE
No reproduction or networking permitted without license from IHS
Not for Resale

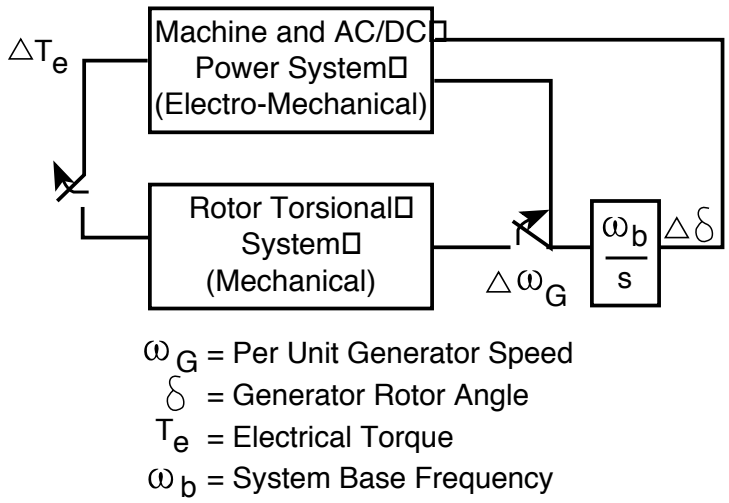


**Figure 6-6—Conceptual system diagram**

where

$D_e$ is the effective damping factor due to electrical system
$K_e$ is the effective synchronizing factor due to electrical system
$w$ is the frequency of oscillations
$w_b$ is the system base frequency

The electrical system will be producing positive damping if the real part of the above transfer function, $D_e$, is positive. In other words, the electrical damping will be positive if, for a positive (or negative) change in the generator shaft speed, the resulting change in the generator electrical torque will also be positive (or negative), so that it will oppose the change in the shaft speed.

It should be noted that without the electrical damping contribution, a torsional system has inherent positive damping due to steam flow, friction, windage, and losses due to shaft twisting, which can be lumped together and termed mechanical damping. A torsional mode will become unstable when the electrical damping contribution is negative and exceeds the mechanical damping contribution. Therefore, comparison of the $D_e$ versus frequency curve, for a specific machine, with estimated values of mechanical damping, is an indication of relative stability of torsional oscillation modes. An example is shown in Figure 6-7. Such a $D_e$ versus frequency plotting approach is very informative when utilized in sensitivity studies, since it readily provides an indication of damping on other modes of oscillation that may exist in the system. Furthermore, the results can be related to modifications in the frequency response characteristics of the control systems.

Another method for investigating the damping effect from the convertor on the nearby generators is to incorporate an electronic model of the turbine-generators in the dc simulator setup of the system. It would then be possible to modulate the shaft speed of the machine and measure the momentary amplitude and phase of the dc power; i.e., the electrical power on the rotor when the convertor is the only load for the generator (isolated operation). Comparison of the dc power with the momentary speed of the rotor would yield the complex transfer function from rotor motion to dc power. The real part of the transfer function, for each frequency, would then be a measure of the damping contribution from the convertor on a torsional oscillation at that frequency.

There is yet another method suggested in the literature for interaction analysts. This method is based on modelling the convertor and its control as an equivalent admittance, valid for a particular combination of network configuration, torsional frequency, and level of series compensation. The convertor equivalent admittance is then combined with those of other system elements to arrive at the net impedance of the system viewed from a given generator, which subsequently can be used for torsional interaction analysis.


Copyright © 1997 IEEE. All rights reserved.
Copyright The Institute of Electrical and Electronics Engineers, Inc.
Provided by IHS under license with IEEE
No reproduction or networking permitted without license from IHS
Not for Resale

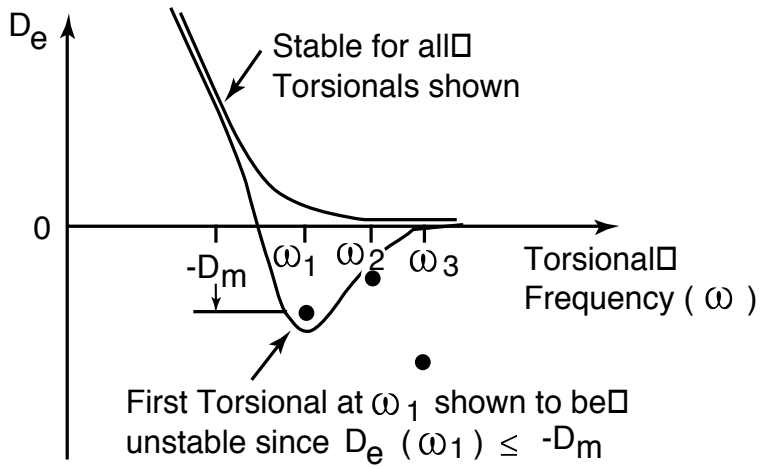


**Figure 6-7—Curves of electrical damping, $D_e$, versus torsional frequency, $\omega$, showing stable and unstable modes of oscillation**

# 7. Transient, steady-state, low-frequency, and power-frequency stabilities

## 7.1 Introduction

A number of phenomena occurring in ac systems fall under the general classification of stability. The particular areas that will be considered hereunder include power system steady-state and low frequency stability, power system transient stability, and power frequency stability. There are other types of instabilities that are particularly connected with dc convertors, such as harmonic instability and core saturation instability. Subsynchronous instability and voltage instability can also occur in ac and dc systems. These types of instabilities are discussed in other clauses of this guide.

## 7.2 Descriptions of stability types

The following descriptions of stability types [B50] apply to electrical systems in general and are applicable to systems that include dc links.

a) *Transient stability of a power system*. A power system is transiently stable for an aperiodic steady-state operating condition and for a particular disturbance, if, following that disturbance, it reaches an acceptable steady-state operating condition. This is generally taken to mean that, for example, for loss of a line, no generator or load has to be disconnected.
b) *Steady-state stability of a power system*. A power system is steady-state stable for a particular steady-state operating condition if, following small disturbances, it reaches a steady-state operating condition that is identical or close to the pre-disturbance operating condition. This is also known as *small disturbance stability of a power system*.

Transient stability is a characteristic of an ac system and is concerned with the electromechanical stability of machines subsequent to a disturbance.

For transient stability there are indirect effects caused by the interaction between a dc link and machine behavior. An ac fault near a dc inverter will cause a collapse of inverter operation during the fault, hence loss of power infeed for this time. The machine will swing as in any ac system, but the “megawatt second” shock

Copyright © 1997 IEEE. All rights reserved.

Copyright The Institute of Electrical and Electronics Engineers, Inc.
Provided by IHS under license with IEEE
No reproduction or networking permitted without license from IHS
Not for Resale

can exacerbate machine behavior. After the fault is removed, the dc power will not recover instantly; the recovery time depends on the dc line, the characteristics of the ac networks, and the control system design. It is usually essential to minimize convertor recovery time to prevent the undue increase of the megawatt second shock, and hence possible transient instability between ac system machines. Recovery time is usually longer when the ac system has a low or very low SCR relative to convertor rating.

Steady-state stability is the response to small disturbances. With constant demand and generation, a system could be said to be in a "steady state," but in practice, the system is continually subjected to small disturbances arising from changing demand, generation output, and voltage conditions. These small disturbances require the system to move continually from one steady-state condition to another. As in all dynamic systems, the movement from one steady-state condition to another involves some oscillation prior to settling to the new condition. In an ac system, these oscillations are damped by machine damper windings and loads. Damping of such oscillations can be improved by using power stabilizer signals on machine voltage regulators, and by the use of supplementary damping controls on dc links.

However, inter-area swings involving weak tie-lines may be at such low frequencies (as, for example, 0.15 Hz) that damper windings have little effect. Negative damping from various causes has been known to produce continuous oscillations (low frequency or dynamic instability). As in the case of transient stability, a dc link with basic controls does not directly affect this type of instability, due to its much higher natural frequency, but with proper action by supplementary controls, system damping and stabilization can be achieved.

When studying the different types of instabilities of an ac/dc system, it is very important to first consider the stability of the convertor with basic controls (refer also to Clause 4); this is particularly relevant in the case of very low SCR systems.

Power frequency stability refers to the frequency conditions of the ac system as a whole. Power frequency stability can be described in terms of steady-state and transient stability, but, in this case, it is applicable to generator groups within a system. A steady-state or oscillatory instability can occur, leading to variations in system frequency in the case of governor hunting. This is relevant, for example, where an isolated generating station feeds only a dc link. To assist speed control of the generator, the dc control would require a characteristic responsive to system frequency such that the dc system load on the generator has a response like that of an ac system. Some form of frequency feedback should be employed to achieve this characteristic.

The transient form of power frequency instability can occur when a receiving system relies relatively heavily on infeed via dc. If system frequency and voltage fall too low, for example, during a transient disturbance, then the system may collapse if the dc input power cannot supply the load power under relevant conditions.

Generator governors will operate to control overspeed, but fast dc link control action in the form of dc power increase or generator tripping may also be required if the overspeed presents a problem.

## 7.3 Main parameters and effects

The main parameters influencing the stability of interconnected systems and their effects are as follows:

### 7.3.1 Transient stability

a) Type and location of fault, method and time of fault clearance, and change in system configuration due to fault clearance all affect the angle to which synchronous machines swing during the fault, and consequently the synchronizing power required to restore synchronism.
b) Pre-fault power flow in ac lines.
c) System inertia also affects the angle to which synchronous machines swing.


Copyright © 1997 IEEE. All rights reserved.
Copyright The Institute of Electrical and Electronics Engineers, Inc.
Provided by IHS under license with IEEE
No reproduction or networking permitted without license from IHS
Not for Resale

d) SCR affects the ability of the dc link to recover after fault clearance. There is no direct relationship between SCR and machine swing, as a low SCR system may have a high inertia, and vice versa. ac machine recovery is a function of fault infeed from the machine terminals. Recovery is thus a function of the ac system impedance rather than ac/dc interaction.
e) Machine angle swings that occur subsequent to fault clearance are consequent voltage swings (to a relatively low magnitude) that may cause inverter commutation failures several cycles after an apparent successful recovery. This condition is accentuated in cases of low SCR.
f) In a var compensation system, both synchronous and static compensation affect system voltage and recovery subsequent to faults.
g) The rate of power recovery affects stability, because after relatively long ac system faults, fast recovery may cause voltage instability at the inverter bus of a low or very low SCR system due to the temporarily depressed ac system voltage seen by the inverter. In this case, a slower rate of recovery may be desirable.
h) DC recovery from faults is dependent on a number of additional factors including protection and control sequences, such as voltage-dependent current order-limits (VDCOL), temporary blocking, ac voltage waveform distortion due to transformer saturation (magnetizing inrush current) harmonic impedance, and settings of dc current recovery ramp rates.

### 7.3.2 Steady-state and Low-frequency stability

a) Network and generation configuration can cause instability because the problem of poor damping will normally occur between plant/demand groups that are electrically far apart, particularly when there is a heavy exchange of power between the two groups.
b) SCR affects the stability of the ac voltage during normal operation. Stability is improved by higher values of SCR.
c) Amount and type of reactive compensation can result in instability, as both synchronous and static compensation may interact with link controls. Link and associated equipment (e.g., SVC) controls that in themselves are stable, may in combination provide unstable or oscillatory operating modes. Also, constant power control contributes to poor damping where the dc link represents a large part of the ac load. This may lead to machine governor hunting unless an extra frequency damping control loop is added.
d) Type of load can affect stability, as loads generally exhibit variations of real and reactive power as a function of voltage and frequency. These characteristics can affect system damping modes.

### 7.3.3 Power frequency stability

The same factors that influence transient and steady-state stability also influence frequency stability. An additional factor is the output of machines lost after a fault as a proportion of total system demand. The higher the proportion, the more likely the occurrence of power frequency instability.

## 7.4 Trends and sensitivities of system parameters

The most important parameters that influence both steady-state and transient stability of synchronous machines are generally applicable to ac systems and not confined to dc links. These include system inertia, fault clearance times, and automatic voltage regulator and governor controls, and are therefore not discussed here.

System fault level affects machine stability and link recovery. In particular, low SCR systems will require longer recovery times to ensure that ac voltages are maintained at satisfactory levels.

A SC(s) increases the inertia of the system and its SCR, thereby assisting in system voltage control. If the link terminal is electrically remote from the rest of the ac system, it can in principle have transient instability problems of its own. Under disturbed conditions a SC can introduce new oscillation modes. This has to be

Copyright © 1997 IEEE. All rights reserved.

Copyright The Institute of Electrical and Electronics Engineers, Inc.
Provided by IHS under license with IEEE
No reproduction or networking permitted without license from IHS Not for Resale

considered when studying low-frequency stability but is of course no different from that of adding a new generator in a purely ac system. Consideration also has to be given to the modulation of the ac voltage resulting from these oscillations. Where a dc link supplies an isolated load without local generation, but supported by a SC, its inertia and ratio of compensator rating to link rating are important to its stability (see Clause 9). The SC should be appropriately sized (reactances and time constants) to mitigate the voltage modulation problem when it is used to support a weak ac system.

In cases assessing the effect of machine swinging on the modulation of ac busbar voltage, the SC can oscillate with combined dominant and hunting modes that are a function of the inertias and impedances.

Static compensation does not increase the ESCR but assists in voltage control subsequent to fault clearance by controlling the overvoltages.

DC control strategy affects system recovery. One strategy is to try to recover power as fast as possible. However, the corresponding reactive consumption tends to reduce the ac voltage. Recovery may not be achieved for a system having a very low SCR unless some temporary limitation is put in the dc current magnitude by the control strategy. Another strategy involves temporary blocking of the inverter if the fault voltage falls below a certain level. After fault clearing, the convertors are deblocked and the current ramped up according to a set rate. This strategy generally may enable smooth restoration but will extend the recovery time.

For a low SCR system, the utilization of modulation of real and/or reactive power can be a valuable asset for enhancing system performance. The criterion for aiding system performance in some configurations may consist of the transfer of real power of the proper magnitude and timing, while, in other cases, reactive power control is more critical to overall performance. The tailoring of the dc system behavior to achieve the most favorable overall ac/dc performance is an attainable system design objective.

## 7.5 AC and dc parallel operation

In the context of weak systems, addition of an ac line increases the strength of the ac system but the dc link may improve performance of interconnected system through modulation.

## 7.6 Influence of dc control

### 7.6.1 Transient stability

Where system contingencies, such as faults, result in the reduction of transmission capability, a generation source will usually accelerate. Remote sources may decelerate as load exceeds generation as a result of the fault that decreases power into that area. Upon clearing the fault, the generation and the remaining transmission experience a transient swing and may approach instability. Very long fault clearance times can cause a loss of synchronism prior to clearance.

If this loss of synchronism does not occur, in an ac/dc system where a dc link is connected to the generation and a system load point, it has been found advantageous to increase the sending end dc link power in the post-fault period in response to the increase of generator speed. This action will remove energy from the generator, reduce its speed, and thus reduce the angular displacement between the generator and the ac receiving system. The magnitude of the modulation applied for this purpose has been in the range of 20–40% of the dc link rating. Systems have been designed with temporary overload limits as high as 65%; in other cases, higher limits have been utilized for modulation consistent with the following provisions. The level of modulation is a function of ac system power transfer need, ac voltage support (var) capability, and dc system design. Similarly, for receiving-end phase angle or speed changes, dc link power can be controlled to correct this condition within the limits imposed by the controllability of the receiving-end phase angle, the dc link capability, and the energy that may be taken from the generation source.


Copyright © 1997 IEEE. All rights reserved.
Copyright The Institute of Electrical and Electronics Engineers, Inc.
Provided by IHS under license with IEEE
No reproduction or networking permitted without license from IHS
Not for Resale

### 7.6.2 Steady-state stability

Conditions have existed wherein heavily loaded ac systems oscillate at a period of seconds and with insufficient damping to prevent buildup of the oscillations. If an existing dc link is connected to one or both buses of the system experiencing a substantial angular swing, suitable control of the dc link can modulate the dc power flow in such a manner that damping is introduced to cause a decay in the system oscillations. The magnitude of the modulation to achieve sufficient damping has been found to be of the order of a few percent of the dc link rating and is considered a small-signal modulation.

### 7.6.3 Power frequency stability

A generator or group of generators representing a small proportion of the total system capacity connected to an ac system has its frequency controlled by the system. Where generation is not connected to the system by ac lines, as in the case of generation connected through dc links only, or in cases of system breakup where generation and load exist in islands, the governors are too slow and hence not effective in controlling system frequency. By suitable control, the dc link response can hold the generation frequency within close limits without reliance on the governors for this purpose.

## 7.7 Methods and tools for study

The complexity of calculations required makes it necessary to use computer programs. The method is to include an appropriate dc link model within a standard ac transient stability or small-signal stability program.

### 7.7.1 Transient stability

a) In the standard ac transient stability program, representation of real and reactive powers at the high-voltage busbar is a function of busbar voltage. This can represent normal and abnormal operation (i.e., commutation failure), and the effect of changes in real and reactive power demand/infeed on ac system machines can be addressed in the transient stability program. The dc is represented by a quasi-steady-state model. This represents the convertors by steady-state equations allowing dc quantities to vary with time. These equations relate the rms ac quantities on one side with the average dc quantities on the other. The control schemes can be represented by a $V_d/I_d$ characteristic or a series of transfer functions.

b) For time domain analysis, the solution is achieved by comparing instantaneous ac and dc values on a three-phase basis using EMTP-type programs. The ac and dc network solutions are carried out separately and compared periodically to ensure agreement on interface quantities. The time steps required for the dc solution are far shorter than those that would be used for the normal transient stability solution, and therefore, during this calculation, a Thevenin equivalent ac network is used. The interface point should be chosen such that ideally the ac quantities are sinusoidal.

c) Simulators can be used, but the accuracy of results is very dependent on the complexity and number of machine models used.

### 7.7.2 Small-signal stability

a) An analysis of steady-state oscillations can be made assuming that the response of the system is linear for small disturbances around a particular operating condition. This assumption enables a simplified linear mathematical representation and provides an understanding of the capability of the system to dampen such steady-state oscillations. The calculation of eigenvalues provides the oscillation frequency and degree of damping for each instability mode.

b) Simulators can be a powerful tool in assessing control and ac system interactions—particularly the fast varieties.

Copyright © 1997 IEEE. All rights reserved.

Copyright The Institute of Electrical and Electronics Engineers, Inc.
Provided by IHS under license with IEEE
No reproduction or networking permitted without license from IHS
Not for Resale

## 7.8 Different types of schemes

The previous discussion of transient stability was concerned with point-to-point dc transmission. Aspects of transient stability relevant to back-to-back and multi-terminal dc schemes are discussed here.

A dc terminal interacts with the transient stability response of the ac system through:

a) Its ability to recover from disturbances (e.g., an ac fault) and to permit the ac system to re-establish synchronizing power.
b) Fast changes of power followed by power modulation to improve ac system transient stability and damping. Modulation of reactive power can be coordinated with the real power or the special requirements of the system.

In general terms, the same considerations apply to back-to-back schemes and multi-terminal schemes. The following are more specific considerations.

### 7.8.1 Back-to-back schemes

Changes in power order do not require communication between terminals. A fast change in power to assist the ac system can be implemented in minimal time, irrespective of which side of the station is controlling current (or power). Also, small and large signal modulation can be applied without communication with full local knowledge of both ac systems. Any coordinated modulation of real and reactive power is performed with locally derived data from each ac system. The extent to which the faster response will be of benefit depends on the ac stability margins. Should one of the ac systems have both low inertia (a faster transient swing) and high impedance, a shorter time will be available for the dc system to provide effective assistance. Fast dc power order changes can only be implemented once the convertors have recovered their operating capability.

### 7.8.2 Multi-terminal schemes

Two factors will make greater demands on the multi-terminal performance.

a) The recovery of a terminal from ac disturbances can be expected to be more complicated because of the possibility of transiently diverted dc current from unfaulted terminals. Interaction with the ac system parameters together with the control response capabilities will determine whether a multi-terminal case for transient ac swings will be more onerous than for an equivalent terminal rating in a back-to-back scheme.
b) Power modulation and changes in power order, unless within overall margins, are implemented through coordination of all terminals (different operating control characteristics leave room for this problem to be minimized).

Should two or more of the multi-terminal stations terminate in the same system, power changes, modulation and ac transient swings will be coupled by the common ac system. Thus, interaction with the ac system is extended to ac interaction between terminals. This gives rise to common-mode disturbances for which the recovery of more than one terminal is a consideration. Power order changes and modulation can be proportionally assigned to the terminals to provide the best performance.

A disturbance that causes a power interruption by dc voltage collapse in one inverter station when other stations are connected to isolated ac systems will also interrupt power flow elsewhere. The nature of the local interaction will determine the recovery performance after the disturbance is cleared at the remote station. In this situation, the common mode coupling is via the dc system.



Copyright © 1997 IEEE. All rights reserved.
Copyright The Institute of Electrical and Electronics Engineers, Inc.
Provided by IHS under license with IEEE
No reproduction or networking permitted without license from IHS
Not for Resale

# 8. Temporary overvoltages (TOVs)

## 8.1 Description of phenomena

Changes in the reactive power balance of the ac network initiated by switching, faults, or power flow variation (in either ac or dc networks) produce changes in the operating voltage. Surplus reactive power can also lead to voltage increases. Larger disturbances result in temporary overvoltages (TOVs). The term "temporary overvoltage" refers to the complete waveform that consists of the fundamental component and the possible superimposed oscillatory component.

On the busbars with close generator infeed, TOVs are reduced within a time constant that is in the range of 200–600 ms by the generator excitation system. In such networks, the possibility of self-excitation of generators after load rejection must be taken into account.

If generators are electrically distant from the convertor terminal, TOVs can be sustained for seconds; they can only be reduced by switching network elements, use of (VCs, or special metal oxide (MO) arresters.

The dc station always consumes reactive power in the range of 0.5–0.6 pu of transmitted power. The amount consumed depends on the commutation reactance and operating $\alpha$ and $\gamma$, but is influenced only marginally by the power flow direction (rectifier or inverter). If the short-circuit capacity of the ac network is low relative to the dc power, a sudden change in the active power, and therefore also in the reactive power, or the blocking of the dc due to a fault, may lead to high TOVs. These overvoltages influence the design and the costs of dc stations.

For equivalent ac network strengths, TOVs in the rectifier mode are normally more severe than in inverter mode, as the voltage drop of the active power on the ac network impedance produces an additional increase of overvoltage.

Usually the loss of convertor real and reactive power occurs almost simultaneously in both dc terminals, and TOVs occur in both stations. Only in the case where the temporary bypass operation mode is used by the convertor control can the overvoltage be avoided in the non-faulted ac network.

TOVs can lead to saturation of the convertor transformer or transformers near the dc station. Normally, the saturation effect reduces the amplitude of the fundamental frequency component of the overvoltage. However, if resonance conditions in the ac network are close to one of the lower-order harmonics, the overvoltage can be amplified. This is often the case when dc power is large compared to the short-circuit capacity of the ac network, as the resonance frequency of such networks is low. Shunt capacitors connected to the convertor bus for ac filtering and reactive power compensation make conditions worse by further reducing the resonance frequency.

In the case of a fault in the ac network and subsequent blocking of the convertors, even higher overvoltages can occur than at load rejection. At the recovery of the system, the voltage component, according to the resonance frequency of the network, is superimposed on the load rejection overvoltage.

When switching transformers, high inrush current can occur. If the harmonic components of this current meet resonance conditions in the network, high harmonic voltages are superimposed on the operating voltage. This leads to TOVs that can last for several seconds.

Figure 8-1 shows an example of TOV at load rejection initiated by blocking the dc convertor. Figure 8-2 shows a TOV at fault clearing in the ac network when the dc remains blocked. The ESCR of the studied system was 1.8 pu. A TOV caused by transformer energization is shown in Figure 8-3.

Copyright © 1997 IEEE. All rights reserved.

Copyright The Institute of Electrical and Electronics Engineers, Inc.
Provided by IHS under license with IEEE
No reproduction or networking permitted without license from IHS
Not for Resale

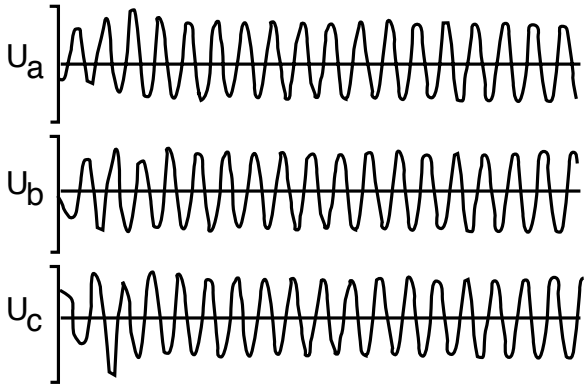


**Figure 8-1—TOV at blocking of dc transmission (SCR = 2.4)**

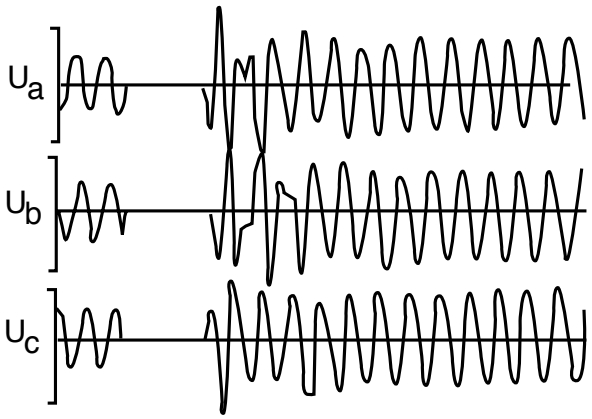


**Figure 8-2—Temporary overvoltage at fault clearing without restart of dc transmission (SCR = 2.4)**

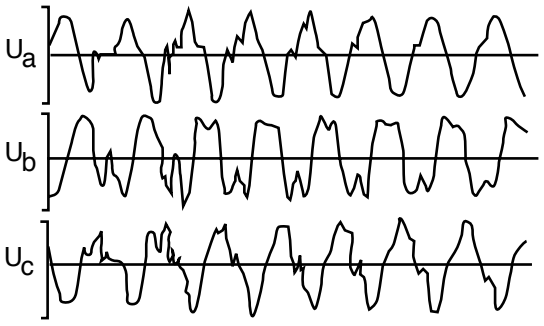


**Figure 8-3—TOV at convertor transformer energization (SCR = 2.4)**


Copyright © 1997 IEEE. All rights reserved.
Copyright The Institute of Electrical and Electronics Engineers, Inc.
Provided by IHS under license with IEEE
No reproduction or networking permitted without license from IHS
Not for Resale

TOVs on the ac side primarily influence the design of arresters on the busbar, and breakers, and through that, the insulation level on the ac side of the dc substation. The stress on the valve side arresters in the station is relatively low, as the voltage across the valves is reduced by factor of approximately $\sqrt{3}$ when the convertors are blocked.

However, if the temporary bypass mode is used for faults in the ac network close to the convertor station, the valve arresters can be stressed by the full value of the TOV after fault clearing.

At partial load rejection, such as load rejection in one pole of a bipolar dc transmission, TOVs are lower than at full load rejection. But it should be noted that in this case the valves remaining in operation are stressed by the full overvoltage, unlike the blocked valves. This type of overvoltage may be critical for an economic valve design. However, overvoltages can be reduced via control action increasing active and reactive power of the sound pole.

## 8.2 Main parameters affecting the phenomena

The main parameters influencing the TOVs are as follows:

a) Strength of the ac network (system impedance) related to the rating of the dc scheme. In addition to the network impedance at the fundamental frequency, the knowledge of the impedance and angle at lower harmonic frequencies for positive and zero sequence system is of importance. However, the value and angle of the ac system equivalent impedance at the fundamental frequency can be used for rough estimation of TOVs.
b) Reactive power consumption of the network, depending on the active power infeed into the network as shown in Figure 8-4. This parameter influences the overvoltage component produced by the change in active power.
c) Reactive power of the dc station defined by the commutating reactance, firing angles, and the operating conditions.
d) Saturation characteristic of the convertor transformer and the network transformers close to the dc station (to calculate harmonic currents at saturation).
e) Reactive power compensation equipment connected to the busbar of the dc station at the given operating conditions. Information is needed on size and conditions for switching compensation units.
f) Configuration of the dc scheme and of the ac network in order to analyze the possible faults and switching operations leading to TOVs and to determine the most severe realistic case.
g) In the case where the generators are electrically close to the dc station, the data of turbo-generators are important (primarily those related to the excitation and speed control systems).
h) Information on the use of additional measures for reducing TOVs; e.g., static var compensators, fast switching of capacitor banks and ac filters, and MO arresters.

## 8.3 Trends and sensitivities of the system parameters

The most important parameter is the value and phase angle of the impedance of the ac network related to the rating of the dc transmission. Regarding the TOVs, the network can be assumed to be weak if the fundamental frequency component of overvoltage at full blocking of convertor station exceeds value 1.3–1.4 pu. This is the case at SCR = 2.5 to 3.0. At higher overvoltages (with weaker networks), additional measures for reduction should be considered to keep costs of the dc stations within limits and to not endanger the voltage-sensitive equipment in the ac network.

A further important parameter is the resonance frequency of the ac network seen from the ac busbar of the dc station. If the resonance is close to the 2nd or 3rd harmonic, the overvoltage can be amplified by the saturation phenomena.

Copyright © 1997 IEEE. All rights reserved.

Copyright The Institute of Electrical and Electronics Engineers, Inc.
Provided by IHS under license with IEEE
No reproduction or networking permitted without license from IHS
Not for Resale

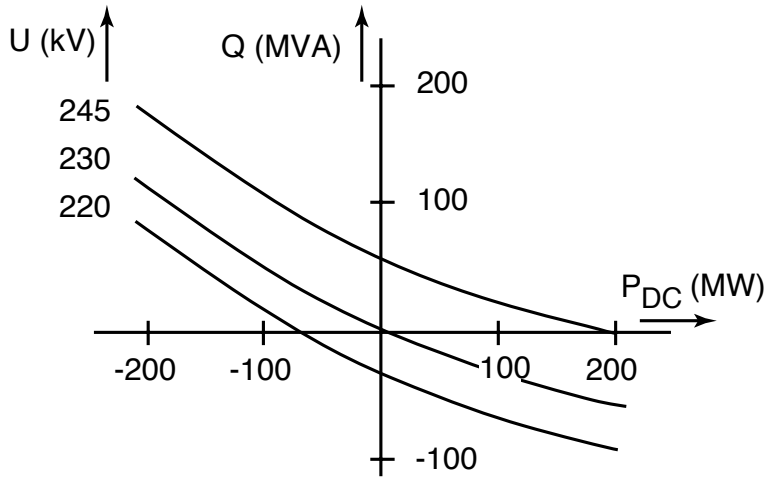


**Figure 8-4—Reactive power requirements of low and very low SCR system depending on the active power loading (example)**

The damping in the network plays an important role as it influences the amplitude of overvoltages and length of their duration. The amplitude of the fundamental frequency component of TOV at an impedance angle of 90° is the same for the rectifier and the inverter. For lower angles in the range of expected values for the ac network, the overvoltages reduce at the inverter and increase at the rectifier because of a more pronounced voltage drop produced by the real power on the ac network impedance.

A reduction of the amplitude of TOVs produced by saturation can also be obtained by the use of ac filters that provide damping at low frequencies of the order of second to fifth harmonics. In this case, filters bypass the harmonics produced by saturation that would flow into the network and produce overvoltages.

## 8.4 Influence of dc control

The reactive power of a dc convertor station can be controlled by increasing the firing angle and influencing the consumption of reactive power. However, in this case the dc station must be designed for reactive power and voltage control.

After a fault occurs in the ac network, with the resultant temporary blocking of the dc transmission, overvoltages can be limited if the dc restarts immediately. An increasing reactive power demand of the convertor at restarting reduces the overvoltage. Nevertheless, for the design of equipment the most severe case must be taken into account; i.e., when the dc fails to deblock, and the full overvoltage occurs.

The use of the temporary bypass operation mode for an ac system fault enables operation at reduced current and increased firing angle in the station connected to the unfaulted ac network. The reactive power demand of this station remains nearly unchanged, and overvoltages can be avoided.

If a fault occurs in only one dc pole of a bipolar dc scheme, control can be arranged to increase active and reactive power of the unfaulted dc pole to counteract the overvoltage.

## 8.5 Methods and tools for study

The estimation of the fundamental frequency component of TOV at blocking and also at fault clearing without dc restart can be done by means of a simplified calculation. It can be conducted separately for each station as the influence of one terminal on the other can be neglected.


Copyright © 1997 IEEE. All rights reserved.
Copyright The Institute of Electrical and Electronics Engineers, Inc.
Provided by IHS under license with IEEE
No reproduction or networking permitted without license from IHS
Not for Resale

Assuming the total ac system seen by the convertor is represented by a Thevenin equivalent and fixed voltage infeed behind the impedance $Z\angle\phi_E$, the overvoltage factor of the fundamental component of TOV $k_{TOV}$ based on the initial steady-state voltage on the convertor bus is:

$$k_{TOV} = [1 + 2Z(P\cos\phi_E + Q\sin\phi_E) + Z^2(P^2 + Q^2)]^{1/2} \quad (27)$$

where

$Z\angle\phi_E$ is the total effective ac impedance, usually defined by ESCR = $(1/Z)\angle-\phi_E$

$P$ & $Q$ is the real and reactive power drawn by the convertor

$P$ is the positive for rectifier, negative for inverter

$Q$ is the positive for rectifier or inverter

Quantities ($P$, $Q$, ac impedance) are per unit values; the base is usually the rated ac voltage and rated convertor real power.

Equation (27) applies exactly only if the solution is less than the saturation voltage of transformers on the busbar, typically about 1.2 per unit of rated voltage. For higher values, the actual fundamental frequency voltage component of TOV will be lower than given by the equation, accompanied, however, by harmonic distortion components.

The reciprocal value of $Z\angle\phi_E$, given in pu, represents ESCR and includes filters and capacitor banks on the busbar. To find this value from the system impedance $Z_s\angle\phi_s$ with its reciprocal value representing SCR, the following equation is valid:

$$\frac{1}{Z\angle\phi_E} = \frac{1}{Z_s\angle\phi_s} + jQ_F \quad (28)$$

where

$\frac{1}{Z_s\angle\phi_s}$ is the admittance of ac system alone, excluding filters and capacitors

$Q_F$ is the total capacitive admittance of filters and capacitors

For the calculation, the fundamental frequency network impedance and angle and the reactive power compensation at the busbar of the dc station are used. The active and reactive power loading of the dc is dropped to zero, and the corresponding overvoltage is calculated assuming the constant voltage behind the network impedance. Figure 8-5 shows the system configuration for the calculation and the results of overvoltage factors for rectifier and inverter operation plotted against SCR, with the impedance angle of the network as a parameter. The calculation gives the fundamental frequency overvoltage component only. The estimation can, however, be used in the planning stages of dc projects.

It is possible to more accurately calculate the fundamental frequency component of the TOV following fault clearing without restarting the dc system. The ac network must be simulated in detail, at least in the neighborhood of the dc station. The calculation can be done using a transient stability program, representing a positive sequence system. The dc infeed can be represented by the active and reactive power loading that can be removed when calculating an overvoltage at load rejection or at fault clearing. An example of such a study where the network was simulated in detail and the generators were represented, including their complete excitation systems, is given in Figure 8-6.

Copyright © 1997 IEEE. All rights reserved.

Copyright The Institute of Electrical and Electronics Engineers, Inc.
Provided by IHS under license with IEEE
No reproduction or networking permitted without license from IHS
Not for Resale

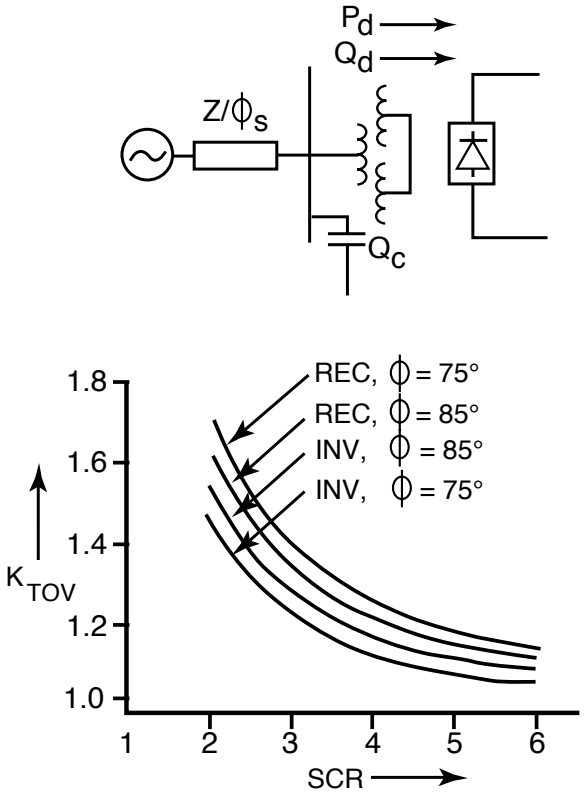


**Figure 8-5—System configuration and results of simplified calculation for overvoltage factor $K_{TOV}$ at blocking of dc over SCR assumptions: $P_d$ = ±1 pu, $Q_d$ = 0.6 pu, $Q_c$ = 0.6 pu, $U_{LO}$ = 1.0 pu**

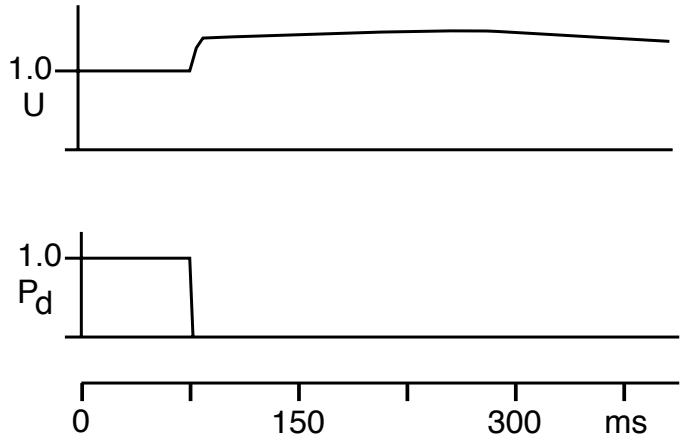


**Figure 8-6—Overvoltage following dc load rejection calculated by stability program (the ac network was represented in detail including excitation systems of generators) (SCR = 4)**

However, this calculation doesn't take into account the transient component of the phenomena and the possible resonance conditions due to saturation. The results of such a study can be used for the design of most equipment if critical resonance conditions are not expected in the ac network. They are, however, not suitable for the detailed study of the arrester stresses for insulation coordination or the determination of transient voltage required for design of other equipment.


Copyright © 1997 IEEE. All rights reserved.
Copyright The Institute of Electrical and Electronics Engineers, Inc.
Provided by IHS under license with IEEE
No reproduction or networking permitted without license from IHS
Not for Resale

For a detailed study, as necessary for the design of surge arresters, a three-phase representation of the ac network, using the corresponding network impedance at least up to the 4th harmonic, is needed. Depending on the use of a control function for limiting TOVs, the dc should be simulated by either simplified or by detailed control representation. The saturation of the transformers should also be properly simulated in this case. The study can be done by digital computers or by using an analog simulator. An example of such a detailed study made on simulator is given in Figure 8-7. The dc is blocked at the fault on the ac busbar of the convertor station and remains blocked after fault clearing. The bus voltages, arrester currents in phases a and b, and the dc power are shown in Figure 8-7.

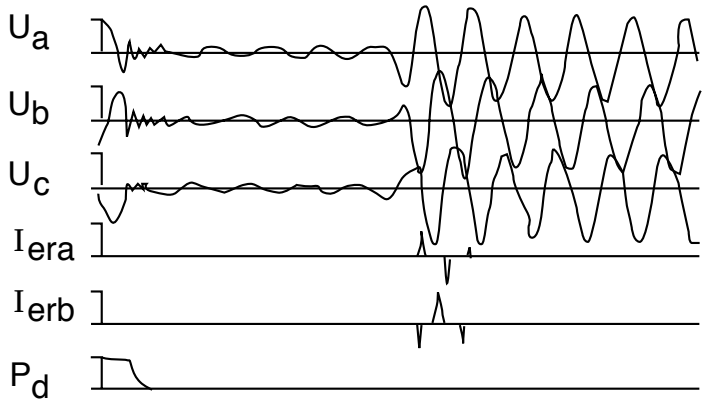


**Figure 8-7—Fault clearing with dc remaining blocked; study of energy stress in the ac bus arrester (SCR = 2.2)**

This detailed network representation must also be used when studying overvoltages and arrester stresses at transformer energization. The example in Figure 8-3 shows the result of such a study.

## 8.6 Measures for the limitation of TOVs

In weak networks, TOVs caused by load rejection in dc systems can reach very high values. This has an impact on the design and costs of the dc equipment and can also endanger other equipment in the network. TOVs can be reduced, apart from convertor control, by such different means as the use of synchronous compensators (SCs), static var compensators (SVCs), metal oxide arresters, and the switching of shunt capacitors and ac filters connected to the busbar of the dc station.

### 8.6.1 Synchronous compensators (SCs)

Synchronous compensators (SCs) connected to the busbar of the dc station increase the SCR of the network. The increase depends on the rating of the SCs and the sum of the subtransient reactance of the machine and the reactance of the step-up transformer.

The TOVs are then reduced according to the increased SCR of the network.

The use of SCs solely for the limitation of TOVs would, however, be a very expensive solution owing to high investment costs and high operating losses. Because of longer maintenance times and the higher outage probability of SCs, one unit should be assumed to be out of operation when calculating the maximum TOV.

SCs should therefore be used only where reinforcement of the network is also needed, because insufficient short-circuit capacity produces problems with other interactions and in low inertia systems.

Copyright © 1997 IEEE. All rights reserved.

Copyright The Institute of Electrical and Electronics Engineers, Inc.
Provided by IHS under license with IEEE
No reproduction or networking permitted without license from IHS
Not for Resale

Sometimes SCs are connected to the tertiary of convertor transformers. However, in such a case, the possible configurations for load rejection must be studied. If, for example, the entire dc station is disconnected due to a fault, the ac network experiences TOVs without the SCs becoming effective.

### 8.6.2 Static var compensators (SVCs)

The static var compensator (SVC) connected to the busbar of the dc station can contribute to the limitation of TOVs by shifting the operating point by fast control into the inductive range. The inductive impedance of the compensator connected parallel to the network impedance reduces the total effective impedance of the network and, through that, limits TOVs.

Because of the time constant of the SVC control, the reduction of the TOV is effective about two cycles after the occurrence of the TOV.

The SVC, as a measure solely for the reduction of TOV, is an expensive item. However, if the SVC is needed for ac voltage control during normal operation, it can be a competitive solution. The solution is especially suitable if voltage control of the ac network and TOV limitation are also needed when the dc system is out of operation and overvoltages can be limited by control action.

To reduce investment costs and losses when the SVC is used for TOV limitation, it can be built for low-rated power during normal operation, but with a high overload capability for the short time of TOV.

The other possibility for limiting TOV by an SVC is by employing a saturable reactor connected to the busbar of the dc station. The advantages of this solution are a large short-time overload capability of the equipment and a response corresponding directly to the voltage increase. However, in many cases additional elements must be provided in this type of SVC to adjust the saturable reactor to the operating voltage and to flatten the slope of the impedance in the saturation area. Problems may also arise from the additional production of harmonics, especially during asymmetrical fault conditions.

### 8.6.3 Metal-oxide (MO) arresters

The metal-oxide (MO) arrester offers an alternative solution to limit TOVs and can act alone or in conjunction with convertor control and the switching of shunt capacitors and ac filters.

The basic idea behind the use of MO arresters to limit TOVs at the convertor station is to exploit the high energy-absorption capability offered by the MO equipment. Various solutions are possible. Two basic approaches adopted in recent dc projects are discussed below:

a) MO arresters with an extremely low protective level are used to limit the TOV to values of typically 1.4 pu and permanently connected to the ac busbar. To achieve this low protective level and because of the given MO material characteristic, significant currents flow through the arrester at normal operating voltages. The arrester, therefore, needs special cooling to avoid overheating during continuous operation.

   The use of such permanently connected MO arresters is recommended where the initial two or three peaks of the TOV are higher than the acceptable value and cannot be limited by other arresters installed in the station.

b) Special MO arresters that are switched in by circuit breakers in the case of high TOVs. When the TOV has been reduced either by restarting the dc system or by switching out the shunt capacitors and ac filters, the arrester is disconnected from the network to prevent overloading caused by normal operating voltage. This arrester can limit the TOV to values as low as 1.25 pu. However, the closing time of the breaker must be considered with the result that the overvoltage is not limited until a few cycles after its occurrence.


Copyright © 1997 IEEE. All rights reserved.
Copyright The Institute of Electrical and Electronics Engineers, Inc.
Provided by IHS under license with IEEE
No reproduction or networking permitted without license from IHS
Not for Resale

In both solutions the possible fault contingencies must be studied carefully to determine the maximum energy stress of the arrester. Lower protective levels require higher energy capability of the MO equipment and consequently lead to higher costs. Experience shows that the optimum overall design could be in the range of 1.25–1.4 pu.

### 8.6.4 Switching of shunt capacitors and ac filters

Shunt capacitors and ac filters used for reactive power compensation in the dc stations decrease the SCR on the busbar, which is the main parameter influencing the amplitude of TOVs following load rejection. This TOV can therefore be reduced if capacitor banks and ac filters are disconnected. However, in this case, the circuit breakers for this equipment must be designed to switch off at maximum TOV. This means that breakers are usually one voltage level higher than in normal cases. When applying this measure for the limitation of TOV, the corresponding opening time of breaker and a suitable strategy for back-up protection (e.g., a second breaker to disconnect the whole station) must be taken into account.

This solution leads to considerably higher costs for the ac switchyard. However, the switching of capacitor banks and ac filters can provide other measures for the limitation of TOV and, in case of MO arresters, is an essential part of the operating strategy.

## 8.7 Different types of schemes

The fundamental and general characteristics concerning TOVs are covered in the subclauses above. In this subclause, only the aspects that are specific or of special importance for other types of schemes, other than point-to-point transmission, are discussed.

### 8.7.1 Back-to-back schemes

The fact that the rectifier and the inverter are in the same station is of importance. A properly designed control and protection system can, in principle, eliminate TOVs on the dc side, regarding both magnitude and duration. The formation of by-pass pairs on the faulty side enables dc current to circulate, and the consumption of reactive power on the undisturbed side is maintained, resulting in voltage control.

In a back-to-back scheme, the two ac systems are more closely coupled to each other, especially concerning harmonics, than in a line or cable transmission. The total impedance in the dc circuit is just the sum of the leakage reactances of the convertor transformers and the smoothing reactor. As a consequence, harmonics in the ac voltage appearing on one ac side can more easily be transferred to harmonic currents on the other ac side via the convertors. Large negative sequence voltages that occur (e.g., as a consequence of single line to ground faults), will give rise to third harmonic currents appearing on the other side. If no low harmonic filters are provided, the transferred harmonic currents might cause high TOVs of that frequency if the system is of high impedance.

If low-order harmonic filters are installed, the third harmonic current can lead to high stresses in these filters. The possibility of transferring harmonics from one ac system to the other must therefore be considered when designing the smoothing reactor and when rating the components in the filters.

### 8.7.2 Multi-infeed schemes

For a single-infeed scheme in a low or very low SCR system, the highest TOVs are most often caused by a disturbance in the dc system. These can include the convertor ac buses, as well as dc line faults and ac faults in the rectifier or inverter. As soon as the convertors resume normal operation, the overvoltages are damped to values that will not impose any stresses on the equipment. However, if multiple dc schemes are connected electrically close to each other, the situation is more complex. Disturbances in one of the systems, such as a load rejection, will cause high TOVs, even though the other scheme(s) is (are) running properly. This must

Copyright © 1997 IEEE. All rights reserved.

Copyright The Institute of Electrical and Electronics Engineers, Inc.
Provided by IHS under license with IEEE
No reproduction or networking permitted without license from IHS
Not for Resale

be considered when designing the equipment. Particularly, the valves must be designed to commutate during the TOVs that might occur due to disturbances in other schemes. Different control actions, such as increased firing angles and filter tripping, can be used to limit these TOVs, as discussed in 8.6.

Not only are the equipment stresses of importance when discussing TOVs in multi-infeed systems. The distortion of the commutating voltage as a consequence of a disturbance in one dc system might give rise to a malfunction in another dc system. As an example, a commutation failure in system 1 distorts the waveform of the voltage so badly that system 2 also suffers a commutation failure, and so on. This process can, for unfavorable network configurations, jeopardize both the performance of the different dc transmissions, and the equipment might also be overstressed.

### 8.7.3 Multi-terminal schemes

Multi-terminal schemes that include dc lines or cables have basically the same TOV characteristics as point-to-point transmission and multi-infeed systems, depending on the coupling via the ac system between the terminals. A few points might be added, more as remarks rather than as specific characteristics for these systems.

The dc side system is usually more complex than for a point-to-point transmission. Also, the number of conceivable operating configurations is often very large. These facts make a study of TOVs on different locations on the dc side very comprehensive. The probability that a fundamental frequency or second harmonic resonance will occur is increased in some of these operating configurations. The existence of this resonance is of great significance for the magnitude of TOVs in the system.

It is easier to locally determine a proper action to limit the magnitude or duration of a TOV in point-to-point schemes than it is in a multi-terminal system. For a multi-terminal system, one has to consider the impact on the other station for a specific action. Such an evaluation takes time and increases the duration of the TOVs. This fact has to be considered when designing the equipment.

### 8.7.4 Low- and zero-inertia schemes

In a zero-inertia system and, very often also, low-inertia system, a SC has to be installed in order to achieve acceptable system performance. The SC might then be installed at the inverter bus, and this system configuration can, for certain contingencies, give rise to very high TOVs.

The most severe case occurs if the last outgoing line from the inverter ac bus is tripped. The active power from the dc convertor will then very rapidly accelerate the SC. Furthermore, there is a very high risk that the SC will be self-excited because of the capacitive load of the connected ac filters. In unfavorable cases, the voltage will rise to high values in just a few cycles, and might jeopardize the equipment.

This fault scenario must be analyzed in detail for the pertinent schemes, and protections that prevent self-excitation of the SC must be installed.

# 9. Zero- and low-inertia systems

## 9.1 Introduction

A feature of an island electrical system that is not connected to other networks by ac transmission lines is that its mechanical inertia is due solely to the local rotational plant. The effect on frequency due to the permanent loss of one generator unit will depend on the size of that unit relative to the total load and on the amount of spinning reserve in service. In cases where there is no local generation, the system inertia has to be provided by SCs as discussed in Clause 2.


Copyright © 1997 IEEE. All rights reserved.
Copyright The Institute of Electrical and Electronics Engineers, Inc.
Provided by IHS under license with IEEE
No reproduction or networking permitted without license from IHS
Not for Resale

The network of Gotland Island can be described as a zero inertia system because it operates without any local generation. The frequency is maintained in steady and transient states by the dc link and the SCs. For normal system conditions the Gotland network can be considered as a high short-circuit ratio system, SCR = 4.7 (based on $X''_d$, and OSCR = 3 based on $X'_d$. With the largest SC out of service, OSCR is just under 3. Both values of SCR are referred to 160 MW, which is normally the maximum operating power, although the installed dc equipment is rated for 260 MW.

Most of the power in the Corsican system is supplied by local diesel generator units. As Corsica is an isolated system, it depends for its inertia entirely on local diesel sets. At a system load of 60 MW, a permanent loss of a 20 MW diesel unit could cause a considerable frequency drop. In these circumstances, the Corsican system can be considered as having inadequate inertia. The dc station at Lucciana, tapped from the 200/300 MW Sardinia-Italian Mainland DC Link, is rated for 50 MW. It can import or export power, but in all circumstances, it provides a 20 MW "spinning reserve" for the Corsican system. The dc power is modulated in order to control the island frequency.

The Corsican system falls between high and low SCR systems if operated at maximum power. For nominal system conditions, SCR = 3 for 50 MW of dc power; normally, operation is lower than 50 MW at dc power. For exceptional system conditions corresponding to a short-circuit level of 120 MVA, OSCR = 4 because the dc power would be limited to 30 MW.

## 9.2 Zero-inertia systems—Island of Gotland

### 9.2.1 Description of the system

The electrical load on the island of Gotland is normally supplied by bipolar dc cable transmission from the mainland of Sweden, as there is no local generation. The present island peak load is 160 MW; the rating of each dc convertor is 130 MW, with a continuous overload capability of 30 MW per pole. Four SCs provide the voltage and frequency on the island. Their total rating is 196 MVA, and their resulting inertia constant is 1.9 s. [$H = (1.7 \times 70 + 2.5 \times 77 + 1.7 \times 30 + 0.8 \times 19)/196 = 1.92$ and $H_{dc} = 2.3$]. They provide a short-circuit capacity of about 750 MVA. The frequency on the island is controlled by modulating the power of the dc link by means of a regulator, which provides the current order to the dc convertors. The ac voltage is controlled by automatic voltage regulators of the SCs. The reactive power is supplied mainly by shunt capacitors on the feeders and the ac filters: 52 Mvar at the dc inverter (busbars). The SCs are lightly loaded, in order to provide sufficient margins at disturbances.

Problems related to low short-circuit capacity have not been experienced; e.g., large TOVs or voltage instability. Therefore, problems related to low inertia are discussed below.

### 9.2.2 Frequency deviation

#### 9.2.2.1 Faults on the mainland

Because of the small inertia constants of the SCs, the frequency deviations at load rejections can be relatively large. The principal relationship between the power from the SC, the inertia constant, and the duration of the load rejection is given by Equation (1) in Clause 2. The event that causes the largest frequency deviation is a solid three-phase fault at the rectifier on the Swedish mainland. This affects both dc poles, as their ac buses are connected for operational reasons. The power to the island becomes zero and the load is supplied by the kinetic energy of the SCs. The duration of the power interruption is determined by the fault detection and clearing time, which is five cycles, and by the charging time of the cable, which is about two cycles. Hence, the cable charging time adds significantly to the load rejection time. The frequency deviation is also affected by the power response of the dc link after fault clearing, as determined by the dc control and the frequency regulator. The full power is restored over some 150 ms, which is equivalent to a total power loss for a further 75 ms. Therefore, the power is lost for a total equivalent time of some 0.215 s (0.1 + 0.04 + 0.075). From

Copyright © 1997 IEEE. All rights reserved.

Copyright The Institute of Electrical and Electronics Engineers, Inc.
Provided by IHS under license with IEEE
No reproduction or networking permitted without license from IHS
Not for Resale

Equation (6) in 2.3.2.1, the drop in frequency is calculated to be 2.3 Hz. This compares to 2.2 Hz obtained by full modelling of the system. No load shedding will be performed.

With the largest SC out of operation, the frequency deviation becomes about 4 Hz. In this case, parts of the load will be shed to ensure that the SCs stay in operation.

#### 9.2.2.2 Faults on the island

The inverters supply the power to a 70 kV ac network to which 10 kV distribution networks are connected through 70/10 kV transformers. The load reactive power is supplied mainly by shunt capacitors in the distribution networks. The reactive power of the inverters is supplied mainly by the harmonic filters and partly by the SCs, with ample regulating margins for disturbances. The ac-busbars of the dc-convertors of both poles are interconnected. Therefore, events in the ac-network of the island affect both poles of the convertors. Reduced ac voltage will reduce the load as well. In addition, the inverters will experience commutation failures for faults in the 10 kV distribution networks. The commutation failures will temporarily interrupt the supply of power and the consumption of reactive power by the inverters and will discharge the dc cable to a negative voltage. Because of the charging time of the cable, it takes a longer time than normal for the inverters to regain commutation. Hence, a commutation failure represents a somewhat more serious event than what is normally the case for dc transmission by overhead line. Even so, the frequency deviations are smaller than for faults on the mainland. No load shedding will be performed. An actual commutation failure event is described in 9.2.3.

#### 9.2.2.3 DC link equipment faults

Most faults of the dc link are limited to one pole. For the outage of one pole the power is increased on the remaining pole employing a 25% overload capability, which limits the frequency deviations to values that will normally not result in any load shedding. Bipolar faults seldom occur, as the two poles are completely separated, to the degree of the overhead line sections being installed on separate towers. Temporary bipolar faults are comparable in their severity to faults on the mainland. For permanent bipolar faults, a black-out on the island cannot be avoided.

### 9.2.3 Commutation failure

#### 9.2.3.1 Description of the event

A three-phase short circuit in a distribution network close to the dc station on Gotland causes a commutation failure. An oscillogram from the fault recorder in one pole is shown in Figure 9-2. Starting from the top, it shows the ac voltages, the ac currents of the two six-pulse groups, the dc voltage, the dc current, and the extinction angle of the dc pole. Before the disturbance, the power was 108 MW, about 43% of the rated power, the dc voltage was 150 kV, and the commutation margin, $\gamma$, was 19° degrees. (Initially the value of $\gamma$ was set to 17°, and relatively numerous commutation failures were experienced, caused by faults in the distribution network.)

After the short circuit ($t = 0$), the commutation voltage of the inverters decreased 10 to 20% and became somewhat distorted. It was obviously sufficient to create a commutation failure in one six-pulse group 21 ms after the short circuit. It can clearly be seen on the ac phase currents, traces 3 and 4, just prior to $t = 21$ ms, that a normal commutation started and that the dc current commutated back again. Then two valves connected to the same phase conducted the dc current, thus short-circuiting the dc side of the six-pulse group. As a consequence, a fast increase of the current was obtained, trace 7. The ac voltage became more distorted and a commutation failure was created in the other group seven milliseconds later. Then the dc side of the pole became short circuited. Similar events took place in the other dc pole. Hence, the three-phase short circuit in the distribution network created commutation failures in all four six-pulse groups of the dc inverter.


Copyright © 1997 IEEE. All rights reserved.
Copyright The Institute of Electrical and Electronics Engineers, Inc.
Provided by IHS under license with IEEE
No reproduction or networking permitted without license from IHS
Not for Resale

#### 9.2.3.2 System performance

The bypass of the inverter started an oscillation between the inductance of the dc reactor and the capacitance of the dc cable, which discharged the cable to a negative voltage and forced the dc current in the inverter to zero at $t$ = 48 ms. The cable was then charged by the rectifier; the transient state was determined mainly by the current controller and the capacitance of the cable. At $t$ = 80 ms the dc voltage approached the "back EMF" voltage of the inverter; transmission could be resumed at 60 to 70% dc voltage. The fault was cleared and the ac voltage was restored at $t$ = 170 ms. The sudden increase of the voltage of the inverter forced the current to zero, after which the dc transmission resumed and the prefault power was achieved.

The principal consequence for the system was an interruption of power transmission with a duration of about three cycles of the power frequency, but the dc link restarted and transmitted a reduced power during the fault. The unbalance between the load and the power from the dc link was supplied from the kinetic energy of the SCs. It did not cause any load shedding, and the frequency was controlled to its normal value by means of the frequency controller of the dc transmission.

#### 9.2.3.3 Conclusions

a) Relatively minor disturbances of the commutation voltage of a dc inverter, even operating with an extinction angle of 19°, which is higher than normally used, can create commutation failures in all of the six-pulse groups of the dc station.
b) An interruption of power transmission of short duration is caused by commutation failures.
c) For cable transmission, the duration of the power interruption is increased due to its capacitance, (compared with overhead line transmission); the cable is discharged to a negative voltage and the charging time is increased.
d) The short interruption of power transmission had no serious effect on the supply of the loads of the Gotland network.

### 9.3 Low-inertia system—Island of Corsica

#### 9.3.1 Short-circuit ratios

The 50-MW Lucciana convertor station is connected to the Corsican 90 kV ac system at a point where the minimum short-circuit level specified for operation at full load is 180 MVA. In this case the system load is about 60 MW and OSCR = 3.6. Given the large amount of capacitor banks installed at the convertor bus (5 × 10 Mvar), the minimum OESCR is 2.6. In exceptional conditions the short-circuit level can be 120 MVA, but in that case the maximum power available from the convertors is limited at 30 MW, OSCR = 4. In this case, the OESCR is (120-30)/30 = 3.

#### 9.3.2 Frequency deviation

As the Corsican System is an isolated network with no ac interconnection with other systems, the frequency is very sensitive to the loss of a local generator (their maximum size is 20 MW for a total installation of 330 MW). When in the "spinning reserve control mode," the convertor station power level is limited to 30 MW so that in the event of the loss of a generation unit, the convertors can inject up to 20 MW more into the ac system to compensate for this loss.

Then the "frequency control mode," which is the basic control mode of the convertor station, adjusts the power level of the inverter to maintain the system frequency at its specified value (50 Hz).

The operator of the convertor station can select in advance two steps of power (12 or 20 MW) for the "spinning reserve control mode," according to the type of generators in operation on the system.

Copyright © 1997 IEEE. All rights reserved.

Copyright The Institute of Electrical and Electronics Engineers, Inc.
Provided by IHS under license with IEEE
No reproduction or networking permitted without license from IHS Not for Resale

During the commissioning of the convertor station, a maximum variation of 4 Hz was recorded after the voluntary trip of a 20 MW diesel unit, thus confirming simulator results. As shown in Figure 9-1, the convertor was exporting 5 MW from the island when the generator was tripped. The power direction was automatically reversed and the dc link settled to import 15 MW, and hence to restore the balance of power.

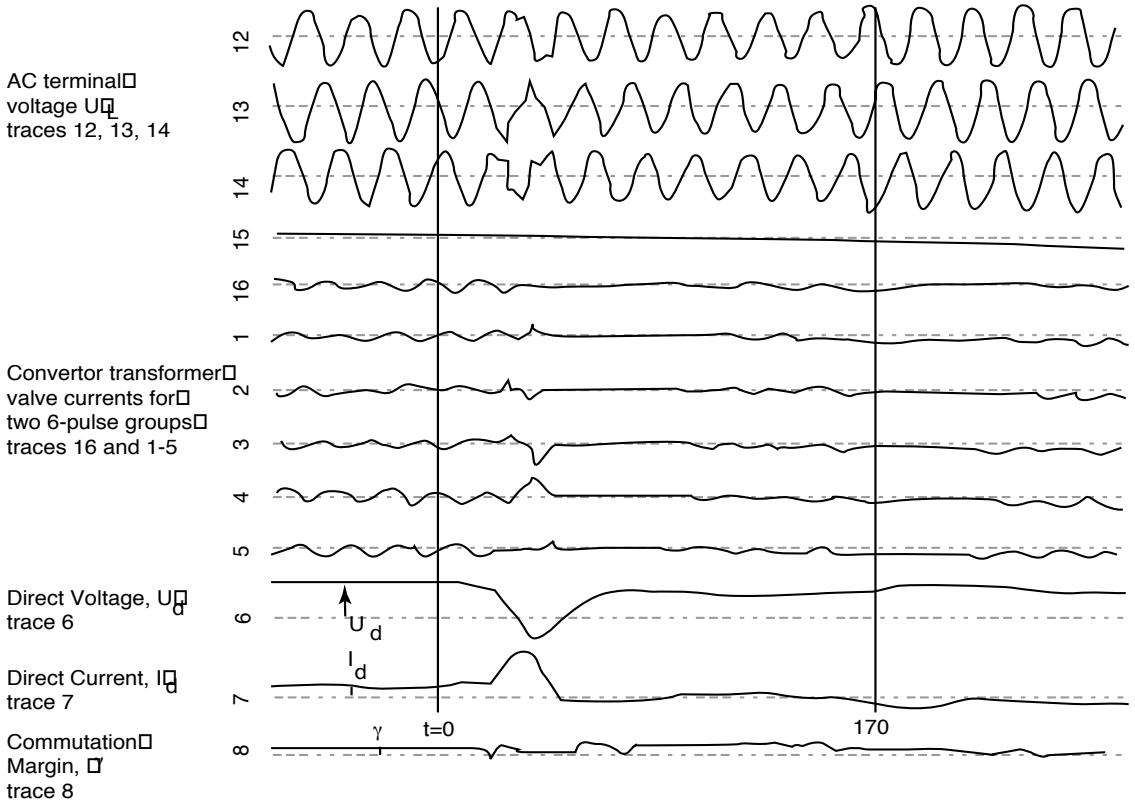


**Figure 9-1—Gotland inventer—commutation failure and recovery**

### 9.3.3 Commutation failures

Because of local climatic and geographic conditions, ac system faults are frequent. After a survey it was established that 80% of the system faults affecting the future convertor bus caused voltage reductions of less than 20% at that bus. The convertor was designed to operate at $\gamma = 40°$ at rated ac voltage while in current control. This choice of $\gamma$ has resulted from extensive ac system fault simulations and probability calculations.

The Corsican dc convertor station is a parallel tap on the SCR dc link interconnecting the island of Sardinia and the Italian mainland. This means that a commutation failure in Corsica will also temporarily affect power transmission in Sardinia and Italy. A probability of one commutation failure in Corsica for a period of five days was found acceptable by both Italian and French utilities. Voltage reductions by less than 20% have proved to cause no commutation failures, regardless of the operating conditions.

### 9.3.4 DC controls

The convertors operate in dc current control with constant power factor (tan = 1).

The station has two loops to regulate the system frequency: The fast loop modulates the power, as for a rotating machine, with a transfer function between modulated power and frequency variation in per unit of


Copyright © 1997 IEEE. All rights reserved.
Copyright The Institute of Electrical and Electronics Engineers, Inc.
Provided by IHS under license with IEEE
No reproduction or networking permitted without license from IHS
Not for Resale

$H_f(s) = 1/(0.02 + 0.045s)$; the slow loop modulates the power order in a pure integral way with a transfer function between modulated power and frequency modulation

$H_s(s) = (k_i/s)*1/f_n$ with $k_i = 100$ MW/s and $f_n = 50$ Hz

Both loops have their output signals limited in amplitude.

# 10. Recovery of dc systems from ac and dc system faults

## 10.1 Introduction

### 10.1.1 AC system faults

AC system faults in the electrical proximity of the inverter station causing inverter ac busbar voltage reductions in any or all phases may cause commutation failures in some or all of the connected valve groups. During the period of commutation failures, usually the fault duration, the associated valve groups cannot deliver any power into the ac network.

The energy loss to the ac system during the fault is unavoidable. After fault clearing, the dc would normally be required to recover as quickly as possible to minimize the energy loss and prevent transient instability of the synchronous machines in the ac system. The importance of commutation failures during system faults, and therefore also the importance of commutation failure probability for remote faults in low and very low SCR systems, depends on the sensitivity of the receiving ac system to the energy deficit during the failure and the convertor behavior during the subsequent recovery period. If the recovery period is not smoothly controlled, the effects on the ac system can be aggravated.

### 10.1.2 DC system faults

Notwithstanding the potential for large power and energy loss to the ac system, from the point of view of the behavior and response of the actual convertors, the operation resulting from dc side faults is generally not so complex or parametrically sensitive as for ac side faults.

DC side faults within the station result in the blocking of the affected valve groups or poles and a corresponding permanent loss of the groups or poles, and thus a permanent loss of the associated dc transmission capacity. DC side faults will be either station ground faults, station equipment faults or insulation breakdown, dc line or cable faults, or ground electrode line faults. With the exception of a temporary dc line fault, these dc-side faults result in a shutdown of the faulted zone, which could be a convertor group, pole, or bipole.

Bipole shutdowns should be very rare. They can be caused by multiple contingencies or sequential events, an overall bipole control failure, a line tower failure, or auxiliary service failure common to both poles. A permanent fault on the electrode line or the common neutral connection of the poles can also cause or require a bipole shutdown. If the neutral fault is a ground short circuit it may not always be necessary to immediately and automatically block the bipole, since this can be done by operator action. These ground faults may be difficult to detect. However, a fault resulting in an electrode line or neutral open circuit can result in high dc voltages on the low voltage side of the pole station equipment, if the bipole is not blocked immediately.

DC station faults, either in the valve group or pole zones, lead to group blocking and, usually, shutdown of the pole. Restoration of the pole is normally done by operator action following fault investigation and correction. Alternatively, if the fault is a permanent fault in a valve group zone, in some schemes the group can be isolated and bypassed by switches or breakers, and the remaining healthy groups in the pole can be restored to full power. In this case, it is possible to employ an automatic sequence that detects the fault zone,

Copyright © 1997 IEEE. All rights reserved.

Copyright The Institute of Electrical and Electronics Engineers, Inc.
Provided by IHS under license with IEEE
No reproduction or networking permitted without license from IHS
Not for Resale

blocks, bypasses, and isolates the faulty group and automatically restores power in the remaining healthy groups in the pole. For most dc applications in low and very low SCR ac systems, however, these sequence times are likely to be long enough, and the energy loss large enough, that they are not likely to meet the required constraints for transient stability. As a result, most present schemes employ only manual pole restoration.

It follows from the above that, in the context of dc recovery within a low and very low SCR ac system, only temporary dc line faults are relevant, and therefore only these will be discussed further in this clause as a category of dc side faults.

## 10.2 Parametric behavior of the phenomena

### 10.2.1 Effect of commutation margin angle γ

Where inverters are operated at γ of 18° (on 60 Hz) it is likely that an ac voltage reduction to less than about 85–90% at the inverter may frequently cause commutation failures. However, with γ about 20° or larger, it is not likely that commutation failures would occur for such or even greater voltage reduction. The effect of various γs is also discussed further in 10.4, using actual system examples.

In dealing with the fundamental principle of the margin angle, special mention should be made of the effect of single phase-to-ground faults in the ac network. The commutation voltages on the convertor valves correspond to the phase-to-phase voltages on the ac side of the system. It can easily be demonstrated vectorially that a single phase fault results not only in a voltage drop in the phase-to-phase voltages but also in a phase shift, and where the relative shift of one voltage is leading and the other lagging. The phase shift in the leading direction effectively infringes on the commutation margin angle and, combined with the voltage drop, increases the probability of commutation failure.

If single-phase tripping and reclosing are applied in the vicinity of the inverter station, special actions must usually be taken. If the system is weak and the single-phase tripping and reclosing occur on a line that has large significance for the operation, the dc power has to be reduced during the time between tripping and reclosing to avoid disturbances in the ac system. Such a scheme has been implemented for the Highgate convertor station [B12].

For remote faults the voltage drop and phase shift may be small, but the phase shift can reach a value of 30° for a fault close to the busbar of the convertor station. These phase shifts can only be recognized by the dc controls if firing synchronizing voltages are developed out of the ac phase-to-phase voltages. An appropriate strategy could then theoretically reduce the probability of commutation failures.

γ controllers often utilize the minimum γ history occurring over the last power frequency cycle (out of 12 commutations for a 12-pulse group) to possibly avoid successive commutation failures with a distorted waveform.

### 10.2.2 Effect of ac system strength on commutation failures

Generally, it can be expected that the weaker the ac system at the inverter, the more likely an ac fault remote from the inverter will cause commutation failures, since it is more likely to result in a larger voltage reduction (or be manifested as a voltage phase shift for single phase faults) at the inverter.

An apparent anomaly can arise in some situations where the system strength is seemingly increased but the inverter's exposure to system faults and hence incidence of commutation failures is also increased. This does not imply that the inverter's performance is worse with the stronger system. One has to be careful in evaluating the relative causes and effects. An extreme example of this would be if an entirely separate system was connected to an inverter or it was already connected to an ac system by a new tie line. This new system


Copyright © 1997 IEEE. All rights reserved.
Copyright The Institute of Electrical and Electronics Engineers, Inc.
Provided by IHS under license with IEEE
No reproduction or networking permitted without license from IHS
Not for Resale

would effectively increase the total system strength and actually improve the inverter performance for remote faults in the previously connected system. However, the inverter is now exposed to all the faults in the new system, and this has to be considered as well. A less obvious example could be a new line added to an existing system. The new line may increase the equivalent system strength and generally improve inverter performance, but it may also increase the inverter's effective exposure to faults in a network at the end of that line or, of course, on the line itself.

Another scenario could be postulated where a new system addition may increase the system strength but move the system, as seen at the inverter, closer to a harmonic resonance. Under certain faults or switching actions, this could inadvertently increase voltage distortions, increase incidence of commutation failures, and deteriorate the inverter performance.

### 10.2.3 Quality of recovery from commutation failures

Recovery after faults is usually easier with a high SCR system and takes longer with a low and very low SCR system. Normally, however, it is the weak inverter ac system that is more in need of fast recovery to preserve stability. On the other hand, post-fault system swings and voltage instability at the inverter bus of certain weak systems may cause subsequent commutation failures. In these cases, slower rates of dc recovery may be desirable and must be optimized.

Very low SCR ac systems may have difficulty providing sufficient reactive power at the rate required for fast dc system recovery. Also, such systems may exhibit high TOVs with severe ac voltage distortion due to harmonic current injection caused by magnetizing inrush currents at re-energization of the convertor transformers upon fault clearing. DC convertor controls have difficulty in operating correctly against such highly distorted ac voltages. This can result in commutation failures and delayed recovery of the dc system.

Commutation failures from unbalanced ac system faults can excite dc side low-order harmonic resonances that may then interact with harmonic resonances on the ac side leading to failure to recover, or at best, delayed recovery.

For low and very low SCR ac systems with high mechanical inertia where fast injection of real power to maintain frequency is not necessary and fast dc power response could result in unsuccessful recovery, it may be prudent to extend (or delay) the dc recovery time. Control strategies to accomplish this are discussed in 10.2.4.

The strength of the ac system is of course relative to the dc power or power rating of the connected dc convertors. For a particular ac system, recovery from faults becomes more critical and difficult with increasing dc power injection. This is just another way of expressing that it is the SCR that is relevant. It is especially important to note here the special case of multi-infeed dc; that is, the case in which more than one dc link or group of convertors are connected to a system. Even if they are not connected to the same point in the system but are within electrical proximity, it is the total dc power of all convertors that is relevant to the recovery phenomena. It may be particularly onerous if all convertors are required to recover at the same rate and in the same fashion. In some cases of low and very low SCR systems, therefore, it may be advantageous to have a staggered recovery of convertors for multi-infeed situations. This has the same effect as artificially increasing the SCR for this situation.

In general, the time for a dc system to recover to 90% of its pre-fault power following ac fault clearing is typically in the range of 100–300 ms. In some cases where delayed or ramped recovery is adopted, which may be necessary with low and very low SCR ac systems, the recovery time may be longer—say, 500 ms. The recovery time depends on the characteristics of the dc and ac systems and the control strategy used.

Copyright © 1997 IEEE. All rights reserved.

Copyright The Institute of Electrical and Electronics Engineers, Inc.
Provided by IHS under license with IEEE
No reproduction or networking permitted without license from IHS
Not for Resale

### 10.2.4 Effect of ac and dc system characteristics and dc controls on recovery from ac faults

The important characteristics of the dc system that influence the recovery time include dc line inductance, dc line capacitance (particularly if it is a cable system), dc line reactor inductance, resonances of the dc main circuit at harmonic frequencies, convertor transformer reactance, saturation characteristics and magnetizing inrush current characteristics, types of ac harmonic filters provided (particularly their damping effect at low harmonic frequencies), and type of reactive power compensation provided. The important ac system characteristics include its equivalent impedance at the fundamental frequency, its impedance at low-order harmonics (second to fourth), the damping effect of nearby loads, system mechanical inertia, ac fault clearing times, and the method of control of voltage at the interface bus.

The ac system impedance is of importance in two frequency regions. One is at the two sideband frequencies of $f_o \pm f_m$, where $f_o$ is the system frequency and $f_m$ is the modulation frequency in the range of 10–30 Hz. This frequency region is relevant to convertor stability and machine shaft resonances and, in transient form, covers the main part of convertor recovery after faults. Usually, the ac system impedance (or the SCR) is sufficiently defined at the mean of the sideband frequencies; that is, at $f_o$.

The second important region is at the harmonic frequencies from about the second to fourth harmonics. This fact is relevant because, with a low and very low SCR ac system, the resonant frequency of the ac system impedance with capacitor and filter banks will be in this region. These low-order current harmonics are excited by both the shock of restoring ac voltage and by magnetizing inrush current after a fault, and cause ac voltage distortion. Above about the fourth or fifth harmonic, ac system impedance is of little importance for convertor stability and recovery, because ac filters act as a barrier to such frequencies. For simulator studies this gives the useful result that the representation of ac lines can be by relatively long lumped sections. It should be noted that harmonic impedances are of less importance where damping exists due to nearby loads, or where damping is provided by low-order damped ac filters.

Satisfactory recovery of a dc system from ac system faults is possible only when the desired operating point in the steady-state is stable. Stable operation here refers to the dc system response to small or medium perturbations of the ac system reference conditions, such as the commutation voltage. For small perturbations (e.g., oscillations with frequencies of the order of 3–10 Hz), the dc system response is determined by the parameters of the main circuit (such as was mentioned earlier), the convertor control system (i.e., type, gain, phase advance settings, etc.), possible static compensator controls, and possibly the master controls and telecommunications. Below 3 Hz, stability depends also on damping controls, and on ac system machines and their controls.

For medium perturbations, such as slow changes of ac voltages within ± 10%, the dc system response is governed by the convertor current-voltage characteristics and can manifest itself as “crossover instability” with weak ac systems. A possible remedy in such cases is to modify the voltage-current characteristics of the convertor in the so-called “current margin error region” to obtain stable operating points in the whole range (see 4.4).

Most present-day dc control systems are capable of resynchronizing and commencing correct operation of the dc system within two cycles of clearing a severe ac fault, such as a three-phase to ground fault. Also the gains and time constraints of the control systems are such that they do not limit or increase the recovery time set by the main system characteristics, and there is no significant delay in changeover between different control modes at the same convertor; for instance from constant γ to constant-current.

With modern thyristor valves there need not be any delay in the recovery due to waiting for recharging of the valve-firing supply following ac fault clearing for fault durations (up to a specified maximum). Control strategies, designed to obtain the desired optimum response of an integrated ac/dc system, may not always require fast recovery of the dc system from ac faults.


Copyright © 1997 IEEE. All rights reserved.
Copyright The Institute of Electrical and Electronics Engineers, Inc.
Provided by IHS under license with IEEE
No reproduction or networking permitted without license from IHS
Not for Resale

To obtain good dc system recovery (that is, no postclearing commutation failures), control strategy alternatives can include delay or slow ramp recovery, reduced current level, and reduced power level at recovery (especially when part of the receiving or sending end system is disconnected due to some fault). Another method that has been found to be helpful in improving recovery is to switch the dc system control mode (master control level) from constant power control to constant current control. There are several ways of doing this—some explicit, some implicit:

a) Action taken by the master control to revert to current control on detection of ac voltage depression (explicit).
b) Placing an upper limit on the current order (at a reduced level or at the prefault level) by the master control. This explicitly states that whenever the power control function orders a current order higher than this fixed limit, the control mode will revert to current control.
c) The implicit methods involve filtering, limiting, or clamping the dc voltage feedback signal.
d) Sometimes the time response of the power control function is made very long such that the purpose of power control is to ensure that the operator requested power order is delivered on average (in the steady state), but that for all practical purposes, during transients the control mode can be considered to be constant current. For this purpose, the power controller function has a response time of several seconds.

A voltage-dependent current order limit (VDCOL) function is normally provided in dc control systems (see 4.6). This function can have an important role in determining the dc system recovery from faults, particularly from faults in a weak receiving-end ac system. The action of this function is to limit the current order as a function of the reduction in dc line voltage. There are many variations of the implementation of this function, including the following:

— Differing delays on imposing limits
— Ramped or exponential limit application
— Stepped or proportional current order reduction
— Hysteresis between decreasing and increasing voltage thresholds
— Different delays and ramps for release of limits
— Different characteristics at different terminals.

The voltage feedback signal used is sometimes actually derived from the rectifier and inverter ac system voltages, rather than from the dc line voltage. This is particularly true for back-to-back dc systems.

If the VDCOL function is activated during an inverter ac system fault, the result will be to decrease the dc current and hence the inverter reactive power consumption, thus helping to support the ac system voltage. In the case of severe single line to ground faults, the VDCOL may also help to recover normal commutation and thus some power transfer can resume during the fault. Following fault clearing, the removal of the VDCOL function current limit may be delayed and ramped so as to maximize the recovery rate while avoiding subsequent commutation failures.

One variation is to have VDCOL action at only the rectifier with a high minimum $\alpha$ at the inverter (e.g., 115°). Approximately 40% (cos 115°) line voltage must be established by the rectifier before current flows, thus minimizing reactive power consumption. Therefore, the minimum $\alpha$ inverter characteristic relative to the VDCOL characteristic is important. The VDCOL here is applied and released with different time constants.

If single-phase tripping and reclosing are applied in the vicinity of the inverter station, special actions must usually be taken. If the system has a low and very low SCR and the single-phase tripping and reclosing occur on a line that has a large significance for system operation, the dc power has to be reduced during the time between tripping and reclosing to avoid communication failures and other disturbances in the ac system. Such a remedial scheme has been implemented for the Highgate convertor station. For ac lines not in the immediate electrical vicinity of the inverter, single-phase tripping and reclosing would enable a continued dc power transfer [B11].

Copyright © 1997 IEEE. All rights reserved.

Copyright The Institute of Electrical and Electronics Engineers, Inc.
Provided by IHS under license with IEEE
No reproduction or networking permitted without license from IHS
Not for Resale

It should also be noted that following a commutation failure due to an ac fault, the inverter current may not need to be reduced by VDCOL action even for schemes with low SCR. If the disturbance is of short duration (100–200 ms), rated current may be held in the dc circuit during the fault, which could subsequently speed up the normal restoration of prefault conditions since no ramping-up process would be necessary. Each scheme would have to be studied in detail to determine the possible advantages of this strategy.

### 10.2.5 Parameters affecting recovery from dc line faults

It was previously established that for faults on the dc side, only temporary dc line faults are relevant for dc recovery within a weak ac system.

DC line faults can be caused by flashovers due to lightning overvoltages, insulator contamination flash-overs, flashovers due to overvoltages arising from faults or control malfunctions, insulation flashover caused by air-borne pollutants, and ionization from such things as forest fires, conductor-tree contact, and tower failures.

Most faults caused by insulation flashovers are temporary in that they can usually be cleared by a short-duration controlled de-energization of the affected pole.

In contrast to ac system faults, where the ac voltage and system behavior are interactive with the dc behavior, dc line faults are mainly a matter of the total energy loss for the receiving ac system. However, it is possible to draw down the rectifier ac voltage during controlled de-energization if the rectifier system is weak. This results from the sudden and large reactive demand during large convertor firing angle changes. This is not likely to be of much significance unless the voltage reduction is very severe and if special problems exist in the rectifier system.

The most common causes of line faults usually result in a single-pole fault with the other healthy pole remaining unaffected in terms of power. In some cases, where the dc is operating below full load, the healthy pole can quickly increase its power to help compensate for the temporary interruption of power flow on the faulted pole.

Single-pole faults in a bipolar system can cause two side effects with respect to electrical operation on the dc side. There will be a surge of neutral or electrode current, equal in magnitude to the healthy pole current, until the faulted pole recovers. Also, the healthy pole can experience a transient overvoltage in the order of 1.7 pu as a result of induction from the sudden voltage collapse on the faulted pole.

In some cases, where faults are caused by insulator failures or pollution, recovery to full voltage may not be successful and the fault may simply re-establish itself. Following an unsuccessful recovery attempt, some schemes employ a recovery attempt at reduced voltage in order to recover as much energy as soon as possible. Reduced voltage operation requires the use of higher firing angles, valve group blocking, or a combination of both.

The energy lost to the ac system is ultimately dependent on the total control sequence used to clear the fault. This sequence is basically composed of the fault detection, de-energization control action (rectifier firing angle force-retard), a waiting period or deionization time, and a restart control where the voltage recovers at some predefined set rate.

Faults can be detected by rate of change of voltage sensing at the line ends, by voltage level sensing, by line end current differential, or by some combination of these. The subsequent control action normally retards the rectifier firing angle even into the inverter operating region to quickly absorb all energy from the dc line and deionize the fault.

Since the detection and control action is relatively very fast, the most significant factors affecting the energy loss are the deionization time, the number of restart attempts that may be required to clear a particular fault, and the recovery rate.


Copyright © 1997 IEEE. All rights reserved.
Copyright The Institute of Electrical and Electronics Engineers, Inc.
Provided by IHS under license with IEEE
No reproduction or networking permitted without license from IHS
Not for Resale

Typically, all actions including detection, force retard, and controlled restart to 90% power, but excluding the deionization time, can require less than 50 ms. Depending on many factors including flashover mechanism and air conditions, the deionization time required may be of the order of from 100–500 ms to ensure a high restart success rate.

### 10.2.6 Effect of compensation type on recovery from faults

During a fault, SCs reduce the net effective impedance by the shunting effect of their transient reactance. Their effect on stability and recovery from faults depends on speed and optimization of their excitation system.

Static compensators act differently than SCs in that they neither increase the inertia or necessarily reduce the effective impedance of the ac system. Their effect on the impedance depends on the compensator type and their mode of operation at any particular time. Certain compensator types, if so designed, can react quickly to limit undervoltages and overvoltages during and following faults and also stabilize the voltage. Static compensators cannot directly influence the sensitivity of ac system frequency to fluctuations in power caused by a fault. However, they can be applied to reduce power fluctuations by improving recovery times and stability.

## 10.3 Different types of schemes

Discussion and consideration of recovery from faults for other transmission schemes are generally similar to those described for normal point-to-point transmission. Fundamental differences for various types of schemes that may have to be considered are discussed below.

### 10.3.1 Back-to-back schemes

The fact that a back-to-back transmission system has no dc line and that both the rectifier and the inverter are located in the same building results in some differences, as compared to point-to-point transmission, in the precondition for recovery performance.

The control equipment for the rectifier and the inverter are normally so close to each other that it is as easy to interconnect them as to interconnect control subsystems in one convertor station. Thus, control actions can be taken at the same time in both the rectifier and the inverter for ac and dc system faults. This can be used to improve the recovery performance as the rectifier and the inverter can be easily coordinated at recovery.

A consequence of this is the better possibility, when compared to line transmission, of avoiding commutation failures in the inverter connected to a weak ac network, after ac system faults. Another consequence is that the recovery after a fault can be more easily controlled, this being especially important when the receiving ac network has a low or very low SCR. In this case, a smooth recovery may be required to prevent the voltage in the network from being so disturbed that subsequent commutation failures occur. For these reasons, it is likely that a back-to-back transmission system can be operated with a weaker inverter ac network than is possible for point-to-point transmission.

The delay in recovery after an ac system fault caused by the necessary charging of the line in a point-to-point transmission is, of course, of no consequence in a back-to-back scheme.

A back-to-back transmission link is more easily subjected to harmonic disturbance interactions between the two connected ac networks than a dc system with a long overhead line or cable. Harmonic disturbances in the rectifier ac network may, for that reason, cause distortions in the inverter if the ac network connected to this station has a very low SCR value. A case which must be considered is the recovery after a zero impedance three-phase fault in the rectifier, especially if the rectifier ac network has a low or very low SCR. When the ac voltage recovers, the inrush current to the convertor transformers causes distortion in the rectifier commutation voltage and the corresponding harmonics are transferred to the inverter ac network via the dc

Copyright © 1997 IEEE. All rights reserved.

Copyright The Institute of Electrical and Electronics Engineers, Inc.
Provided by IHS under license with IEEE
No reproduction or networking permitted without license from IHS
Not for Resale

circuit. If the ac system with ac filters and shunt banks, located at the rectifier, is in parallel resonance at, or close to, the second harmonic, the distortion will be considerable. This phenomenon must be studied, for instance on a dc simulator, for a specific back-to-back project with weak ac networks to investigate the risk of commutation failures.

### 10.3.2 Multi-terminal schemes

In a multi-terminal dc system with a moderate number of nearly equal-rated convertor stations, with none of the connected ac networks having a very low SCR, a recovery performance similar to that for point-to-point transmission can be obtained for ac system faults.

However, if there is a station in the dc system with a significantly lower rating than the average, and especially if its connected ac network has a very low SCR, special precautions may be needed to attain optimal recovery performance for the whole dc system. To judge the significance of the ac network in this case, its SCR should be related not only to its own convertor capacity but also to the total transmission capacity of the dc system.

This situation may require some precautions for the recovery after a ground fault in any of the connected ac networks. The small convertor, when in inverter operation with its low or very low SCR ac system, may not be able to manage a fast recovery without the risk of an ac voltage collapse that affects the recovery of the whole dc system. On the other hand, fast recovery may be required for the other larger stations. This contradiction may be solved by letting the small convertor recover its dc voltage as quickly as possible in conjunction with all connected convertors but delaying the increase of current through it, enabling the other convertors to have a fast power recovery. In some cases, it may be necessary to block the small convertor to allow other convertors to recover.

A multi-terminal dc scheme can exist in a variety of configurations, especially if it includes four or more convertors. Optimal recovery performance for each configuration requires various recovery control parameters and strategies.

For faults on the dc side in multi-terminal schemes, special considerations can exist for the various configurations. All dc-side faults will, at least temporarily, affect all convertors connected to the faulty pole in all the separate stations of the scheme. In some cases, a permanent fault may involve action sequences to switch and isolate a dc line and/or a convertor. These may involve parallel or radial dc lines and parallel or series convertors. If the isolating switches are full dc breakers, they would be capable of interrupting dc current and withstanding the recovery voltages, and also could provide load-breaking capability. Without dc breakers, the action sequence must ensure that the dc currents are reduced to zero and this may require significant station-to-station control coordination, signalling, and delay times. In some configurations, switches may only require a capability to commutate dc current to a parallel path that would be much less duty than full load breaking. Example applications of this would be switches on parallel dc lines or a metallic-return transfer breaker, where dc current is diverted from a ground return to a line conductor current return in a pole.

### 10.3.3 Multi-infeed dc schemes

A special case may be made for situations where more than one dc transmission scheme is feeding into the same ac system; that is, multi-infeed dc. Mention was already made in 10.2.3 of the potential advantage of having staggered recovery of convertors from ac system faults for this situation.

A SCR defined as the quotient between the network short-circuit capacity and the totally installed dc power may be very low in this type of configuration. For that reason, a fast recovery of all dc transmission at the same time after an inverter ac network fault may not be possible. Thus, either such a joint recovery must be made slowly or other measures must be taken to avoid causing a collapse of the ac network voltage at recovery.


Copyright © 1997 IEEE. All rights reserved.
Copyright The Institute of Electrical and Electronics Engineers, Inc.
Provided by IHS under license with IEEE
No reproduction or networking permitted without license from IHS
Not for Resale

For example, two separate inverters may be connected to the same ac bus, or inverters may be connected to different buses in the system. If both inverters have, in principle, identical recovery strategies, then an ac fault may require that the ac system must support the recovery of both inverters or the recovery of total dc power. Alternatively, it may sometimes be possible to help a particularly weak system by delaying the recovery of one inverter until the first inverter has recovered to normal. It may also have to be determined whether a commutation failure in one inverter could cause sympathetic commutation failures in other inverters by means of ac transferred distortions. Thus, it is important that commutation failures do not also occur in the inverter following recovery after a fault in the rectifier ac network. A rectifier can drive current so fast that inverter $\gamma$ is reduced to the commutation failure point. A weak inverter ac system can aggravate this effect through a collapsing ac voltage inducing a faster and higher dc line current rise.

### 10.3.4 Low-inertia systems

The case of infeed of dc power to an isolated network with low inertia is a special case of the more general one with infeed to a weak network.

An interruption of power transmission in this case causes a decrease in frequency, and the control system for the inverter must be designed for operation with a low network frequency. The frequency decrease following a temporary interruption depends on the duration of the fault, the load in the island network during the fault, the speed of recovery of the dc link, and the inertia of any SCs that may be installed to make inverter operation possible.

From an economic point of view, it is normally desirable to choose a SC that is as small as possible. However, a small machine means both a low inertia, which gives large frequency fluctuations at disturbances, and a low short-circuit power, which gives associated large voltage fluctuations. Studies need to be performed to investigate the necessary size of the SC(s).

Since the losses in the network are of great importance for the dynamic performance of dc transmission connected to a low or very low SCR ac network, the loads in the island network should be taken into consideration. An isolated ac network with low inertia is often of small geographic extent and the loads are found electrically close to the inverter bus. This is important for the behavior of the dc system.

## 10.4 System experience and examples

### 10.4.1 AC system faults

The following are some examples of control strategies used to obtain good dc system recoveries and some examples of fault responses from actual systems.

For the Itaipu dc system, a 320 ms restart time was found to be better than a 160 ms restart time for a three-phase fault at the inverter. The dc voltage measurement time constant was increased from 50 ms to 500 ms. A current control mode of operation with a prefault value of current order was adopted at the inverter for ac system faults at both Itaipu and Highgate.

Both at Miles City and at Sidney, for a five-cycle, three-phase fault at the inverter, the restart delay after fault clearing is two cycles, the recovery current is 0.3 pu. For Miles City (SCR = 2.0), the recovery rate is 2 pu/s, giving a recovery time of 450 ms. At Sidney, where the SCR is about 3.5–6.0, the recovery rate is 10 pu/s, giving a recovery time of 90 ms. For loss of the Sidney-Stegall line, the east to west power flow is limited to 125 MW, and from west to east, it is in the range of 75–100 MW. This type of power reduction for loss of a critical line is implemented for Highgate also. In the Cross Channel scheme (minimum ESCR 2.5) the recovery to 80% of the power varies from 100–150 ms, depending on the fault.

Copyright © 1997 IEEE. All rights reserved.

Copyright The Institute of Electrical and Electronics Engineers, Inc.
Provided by IHS under license with IEEE
No reproduction or networking permitted without license from IHS
Not for Resale

On the Des Cantons-Comerford DC Link between Hydro-Quebec and New England, maximum power order limits are imposed for the loss of certain key ac lines. At Des Cantons, a power order limit is imposed to avoid ac system voltage instability whenever the single 735 kV ac line feeding the substation is disconnected. The limit imposed is a function of both the local load level on the 230 kV network as well as the direction of power exchange over the dc link. The power reduction limits imposed at Comerford are to avoid serious overloads of ac transmission lines or ac voltage stability problems. The limits depend on which ac line is lost and on the direction of power transfer. The limit is imposed instantaneously when the problem associated with a particular outage is related to ac voltage stability. When the problem is related to thermal overload, the power order is ramped to its limit over a period of a minute or more.

On the Nelson River system, bipole 1 maintains valve firing during the fault and advances $\gamma$ in an attempt to recover commutation. This strategy attempts to recover power as fast as possible. However, the corresponding reactive consumption tends to reduce the ac voltage further and recovery may be critical for certain weak system situations. On bipole 2, a protection sequence is used if the commutating voltage falls below 0.5 pu. The rectifier is then force-retarded by an $\alpha$-ramp to a 120° limit, and the inverter is put into bypass pair operation followed by pulse blocking. When the ac voltage recovers to above 0.85 pu, the pulses are deblocked and the current is allowed to recover. Bipole 2 recovers within about 170 ms after fault clearing. The different mechanism and rate of recovery between bipoles 1 and 2 is deemed in some cases to be beneficial for total dc recovery against the weak inverter ac system (minimum ESCR = 2.5).

Figures 10-1 and 10-2 show typical commutation failures and responses of Nelson River bipoles 1 and 2, respectively, for ac faults remote from the inverters.

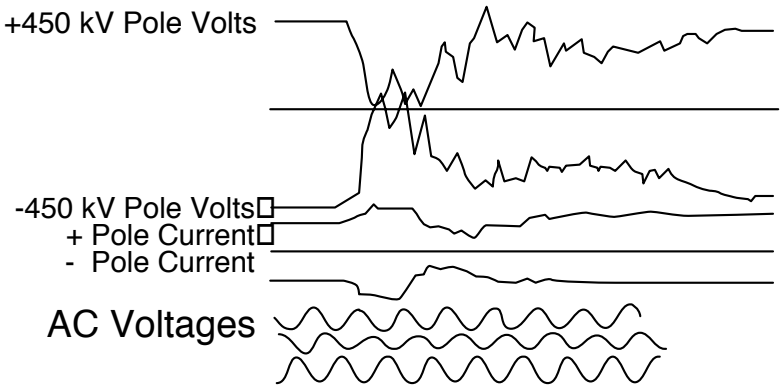


**Figure 10-1—Nelson River bipole 1 response for ac system fault**

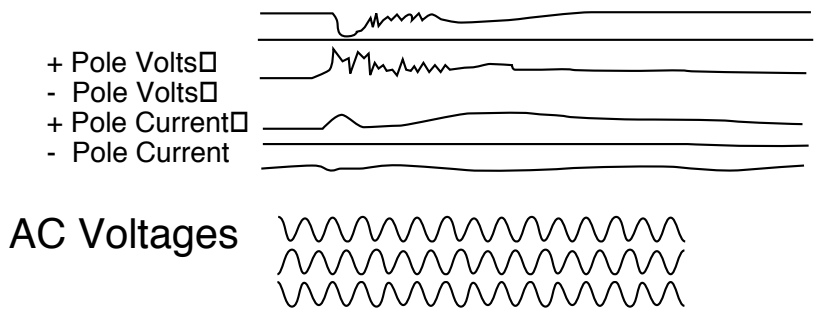


**Figure 10-2—Nelson River bipole 2 response for ac system fault**


Copyright © 1997 IEEE. All rights reserved.
Copyright The Institute of Electrical and Electronics Engineers, Inc.
Provided by IHS under license with IEEE
No reproduction or networking permitted without license from IHS
Not for Resale

Figure 10-3 shows a typical commutation failure at Sellindge terminal of the 2000 MW Cross Channel DC Link where 60 MW·s was lost during the commutation failure with about another 50 MW·s being lost during the recovery. In the case of a system having a high SCR value, this would not normally be noticed, but in this case a commutation failure occurred. It was almost certainly due to a phase shift on the 400 kV system that triggered an acceleration-sensitive device on a large generator, which consequently unloaded. The value of γ at Sellindge is 15° on 50 Hz, and the fault level is generally in excess of 12 GVA.

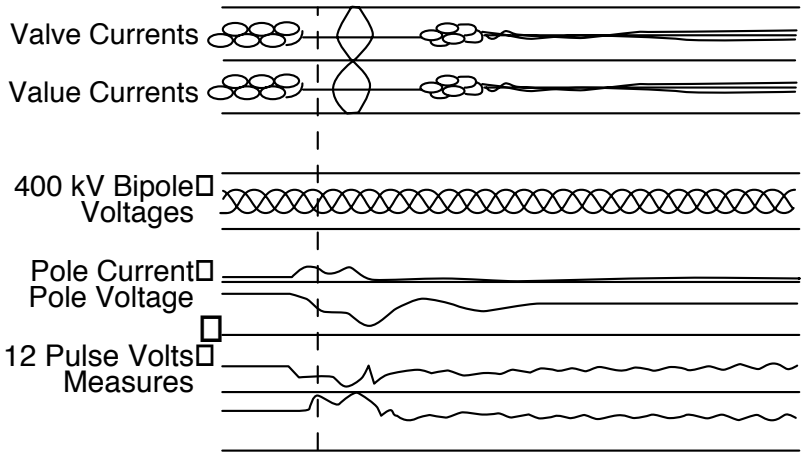


**Figure 10-3—Sellindge (Cross Channel) commutation failure due to lightning strike on remote circuit**

Figure 10-4 illustrates a more unusual event and gives a rather better illustration of the capabilities of a modern convertor. Following severe storms in October 1987 in southern England and northern France, there was significant insulation pollution, which resulted in many ac system faults in both countries. One event in particular led to a persistent high impedance line fault that reduced the voltage on one phase of the CEGB 400 kV system to 0.8 pu for about 0.5 s. As Figure 10-4 illustrates, the initial voltage reduction resulted in a commutation failure of the UK inverter, but the dc link was able to resume operation within a few cycles of the beginning of the incident, continuing to transmit almost the ordered power throughout the 0.5 s voltage reduction. The conditions during this event were remarkably stable in that the direct voltage, although somewhat reduced, was well smoothed by the comparatively large cable capacitance, and the inverter proved capable of continuing to operate with no further commutation failure in the face of severely unbalanced ac network voltages. There has been some occasional discussion on the efficacy of commutation failure prediction circuits. Opinion is divided on whether their advantages outweigh their disadvantages. It is interesting to note that this performance was obtained from a convertor whose normal steady state γ is 15° (on 50° Hz), incorporating no commutation failure prediction circuits.

### 10.4.2 DC system faults

On the Nelson River system, line fault tests have been conducted in an attempt to determine an acceptable minimum deionization time required to clear a temporary pole to ground fault and allow successful restarts. These tests indicated that 100 ms should be sufficient, and this has been implemented. However, there has not been long-term experience with natural line faults using this deionization time because, until recently, automatic restarts were not allowed, due to power surge constraints imposed by the receiving-end ac system.

Figure 10-5 shows the dc response and recovery from a dc line fault. This particular restart used a 200 ms deionization time. These traces also show the fault side effects of induction into the healthy pole, and the healthy pole voltage reduction due to rectifier ac voltage depression with increased reactive consumption during firing angle force-retard.

Copyright © 1997 IEEE. All rights reserved.

Copyright The Institute of Electrical and Electronics Engineers, Inc.
Provided by IHS under license with IEEE
No reproduction or networking permitted without license from IHS
Not for Resale

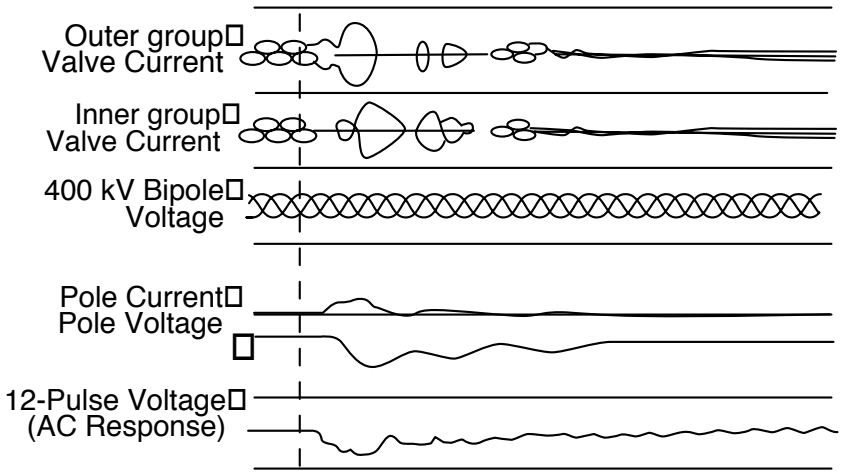


**Figure 10-4—Sellindge (Cross Channel) commutation recovery following prolonged ac line—ground fault**

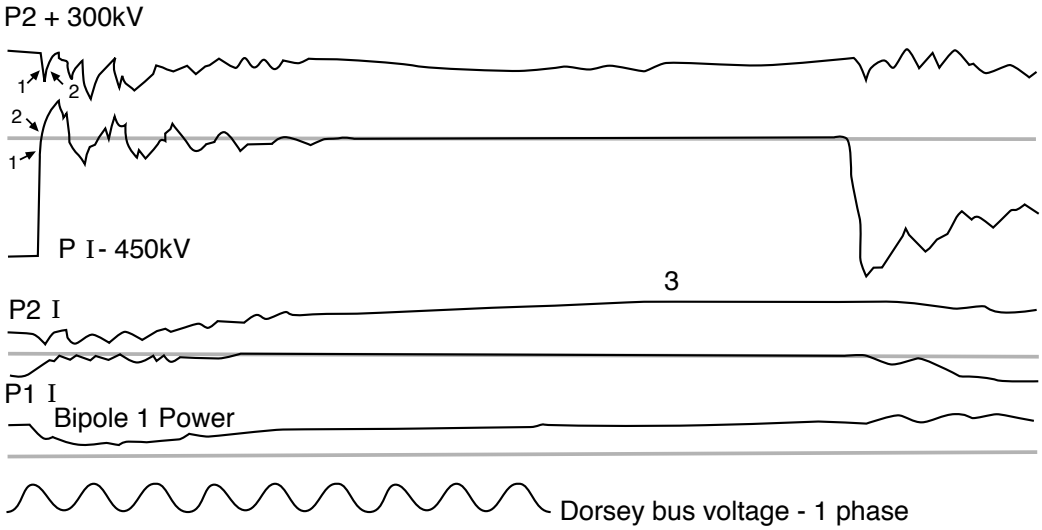


(1) + ve sequence (metallic mode ) wave - opposite polarity induction in healthy pole.
(2) - ve sequence (ground mode) wave - same polarity induction in healthy pole.
(3) The current in Pole 2 increases to compensate for voltage reduction.
Healthy pole voltage reduction is due to rectifier and ac voltage depression, which in turn is due to increased var consumption when forced retard is applied.
Line Travel Time = 3.2 msec

**Figure 10-5—DC line fault on Nelson River bipole 1 near rectifier with successful restart (inverter traces)**


Copyright © 1997 IEEE. All rights reserved.
Copyright The Institute of Electrical and Electronics Engineers, Inc.
Provided by IHS under license with IEEE
No reproduction or networking permitted without license from IHS
Not for Resale

## 10.5 Methods and tools for studies

Various study tools, ranging from standard load flow and stability programs to full dc simulators, can be used to study important aspects of dc recovery from faults.

To study the performance and optimization of the dc side, considerable modeling detail of the dc system and controls is required as well as a three-phase representation of the ac network, effect of harmonics, unbalances and non-linearities, etc. For recovery from normal faults up to about 300 ms, however, an ac system can be represented relatively simply as a Thevenin equivalent of fixed EMF behind a linear impedance. Machine controls do not have time to change appreciably in this time, and any phase change due to finite inertia is irrelevant to convertors.

DC side studies therefore require the use of dc simulators or their near equivalent digital programs, such as electromagnetic transient programs. Studies can include the sensitivity of dc recovery to such things as voltage distortions due to saturation nonlinearities, control constants and strategies, and dc current ramp rates.

At an early stage of the dc system design, the dc side studies indicated above may be used to determine the approximate dc response and power transfer for various faults and the possible dc recovery times. This information can then be used to study the corresponding effect of faults on the ac system. An interactive optimization must then take place.

For the fully integrated ac/dc studies, the system stability performance generally depends on the dc power recovery, which in turn depends not only on the dc current recovery rate but also on the ac voltage recovery. In addition, the dynamic stability following faults can be positively influenced by proper dc modulation control to provide damping.

Proper stability studies therefore require some detailed dc system modeling to at least give equivalent responses. The representation should include correct functional simulation of the effects of dc current and $\gamma$ controllers, master power controls, modulation or damping controls, telecommunication time delays, and special dc logic or protection sequences, including group blocking, current or voltage ramps, and VDCOL.

In general, the models must not be overdetailed in order for events to take place that are consistent with the dc solution time step. For stability purposes, approximations are useful as long as the overall real and reactive power responses are reasonably correct.

--`,,`,-`-`,,`,,`,`,,`---
Copyright © 1997 IEEE. All rights reserved.

Copyright The Institute of Electrical and Electronics Engineers, Inc.
Provided by IHS under license with IEEE
No reproduction or networking permitted without license from IHS
Not for Resale

# Annex A

(informative)

# The dc conversion process

## A.1 The dc conversion process: steady-state operation

### A.1.1 The basic dc convertor

The basic dc convertor is a valve group consisting of six unidirectional valves acting as switches in six-pulse operation, as shown in Figure A.1. The ac voltage is fed to the convertor through a convertor transformer. In modern convertors the active elements in the valves consist of thyristors, and they are timed to switch in such a way that the voltage between the dc terminals is fixed to the desired value. This is done by the control system, which from different input signals determines when each individual valve should be fired to obtain the appropriate performance. The simplest dc-system consists of two six-pulse bridges connected together by a dc line that carries the direct current. Figure A.2 shows such a simple system and how the current flows in the system at a certain instant. Active power is injected into the dc line by a convertor operating as rectifier, and is injected into the ac system connected to the other convertor, which is operating as inverter. Usually in practical applications, two six-pulse bridges are connected in series to obtain twelve-pulse operation, which will be explained in the following subclauses.

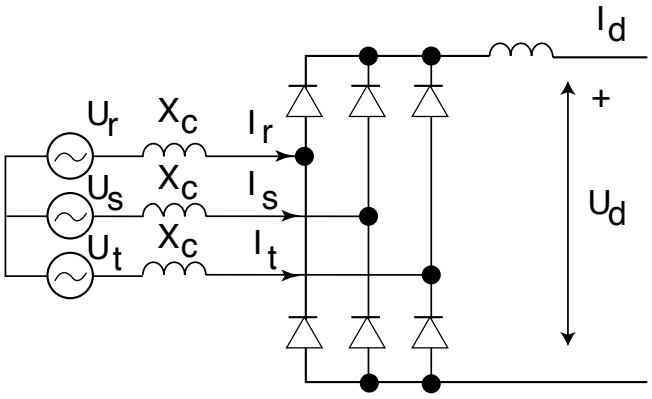


**Figure A.1—The basic six-pulse convertor bridge**

### A.1.2 Operation of the basic six-pulse convertor

To explain the operation of a six-pulse convertor, it is assumed that a constant, smooth, direct current $I_d$ flows through the convertor (see Figure A.3). With the convertor transformer reactance reflected to the dc side, the dc reactors and reactance of the dc line will smooth the current, which justifies this assumption. The voltage between the dc terminals of the convertor consists of the different parts of the phase-to-phase voltages at the dc side of the convertor transformer determined by the switching of the valves. In steady state, the firing of the valves is done in such a way that each valve is fired with a fixed delay with reference to the zero-crossing of the voltage across that valve. This delay, denoted $\alpha$, is measured in electrical degrees and is called delay angle or firing angle. Because of the reactance of the convertor transformers, the direct current cannot commutate from one phase to another instantaneously and the dc current is consequently shared between the two phases during the commutation process. A detailed analysis of this process is out of the scope of this annex; the reader is referred to bibliography entries [B53] and [B82] in Annex B for a comprehensive treatment.

Copyright © 1997 IEEE. All rights reserved.

Copyright The Institute of Electrical and Electronics Engineers, Inc.
Provided by IHS under license with IEEE
No reproduction or networking permitted without license from IHS
Not for Resale

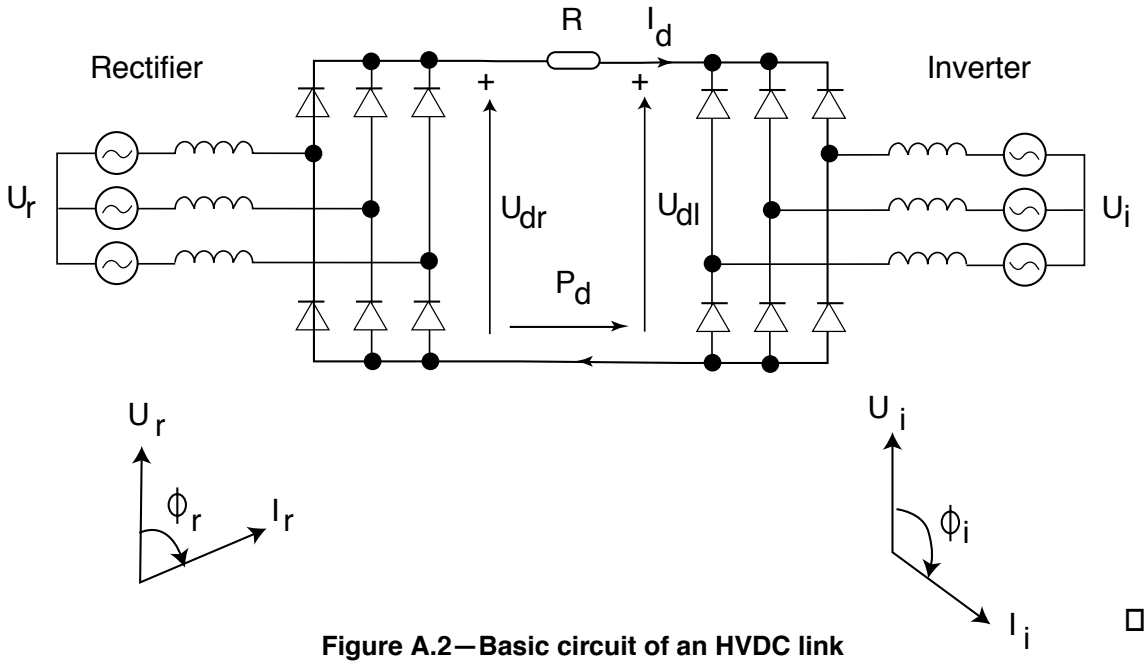


**Figure A.2—Basic circuit of an HVDC link**

### A.1.3 Direct voltage of six-pulse convertor

The resulting voltage shape of a six-pulse convertor is shown in Figure A.3 for a convertor operating with $\alpha = 15°$ (rectifier operation). In this figure, the phase current and the valve voltage are also shown. The phasors of the ac voltage and the fundamental component of the phase current are depicted in Figure A.2. It can be shown that the value of the dc content of the voltage between the convertor terminals is given by the following (neglecting resistive losses in the convertor and assuming overlap angle μ less than 60°; i.e., no double commutation):

$$U_d = \frac{3\sqrt{2}}{\pi}\cos\alpha U_{\text{vo}} - \frac{3}{\pi}X_c I_d(\text{rectifier}) \tag{A.1}$$

where

$U_{\text{vo}}$ is the phase-to-phase rms of the ac voltage at the dc side of the convertor transformer
$X_c$ is the commutation reactance referred to the valve side of the convertor transformer per phase in Ω
$\alpha$ is the firing angle

The commutation reactance should include the leakage reactance of the convertor transformer and other reactances in the commutation circuit that may influence the commutation process. By defining the quantities $U_{\text{dio}}$ and $d_x$ through

$$U_{\text{dio}} = \frac{3\sqrt{2}}{\pi}U_{\text{vo}} \tag{A.2}$$

and

$$d_x = \frac{3}{\pi}X_c\frac{I_{\text{dN}}}{U_{\text{dio}N}} \tag{A.3}$$


Copyright © 1997 IEEE. All rights reserved.
Copyright The Institute of Electrical and Electronics Engineers, Inc.
Provided by IHS under license with IEEE
No reproduction or networking permitted without license from IHS
Not for Resale

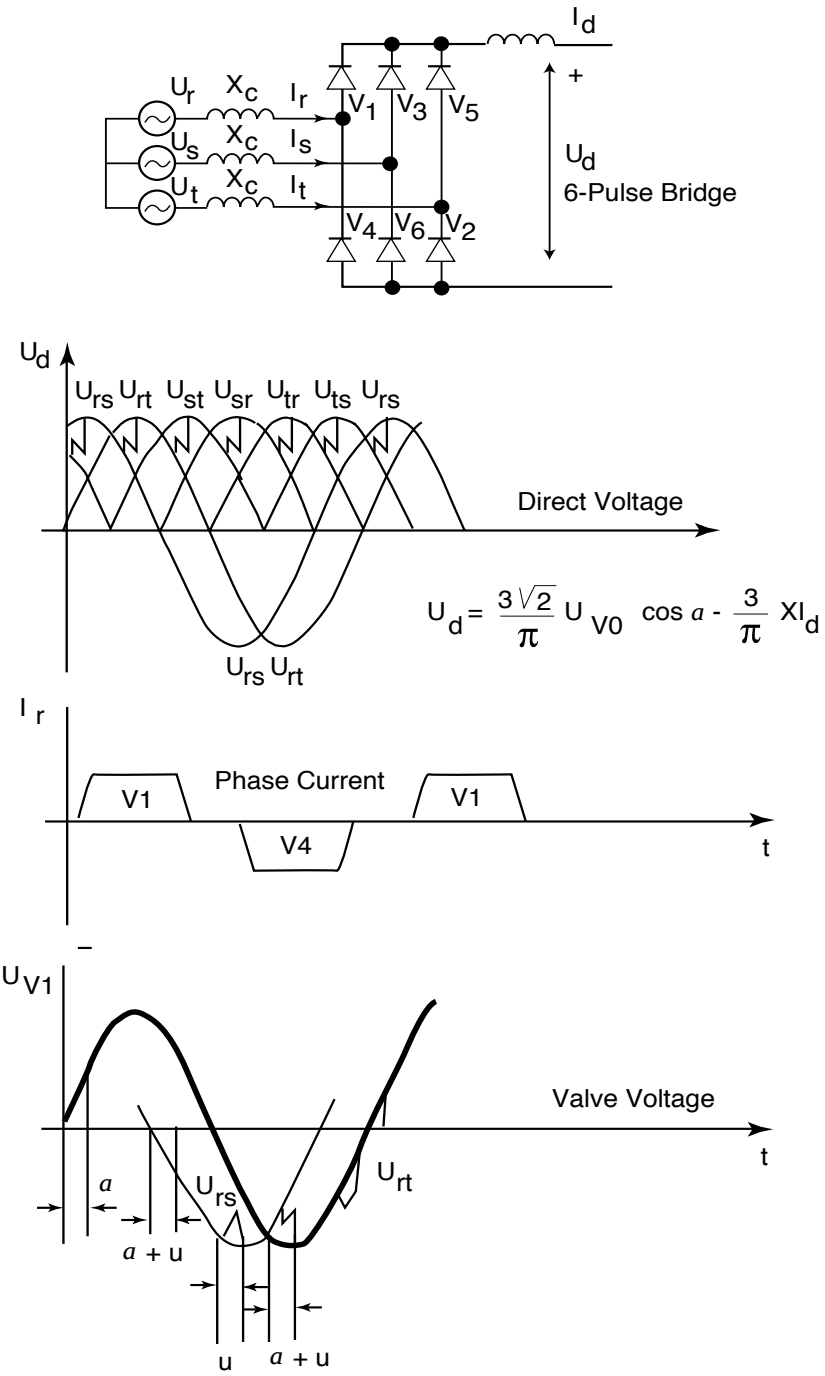


**Figure A.3—Direct voltage, phase currents, and valve voltages of a six-pulse converter bridge in rectifier operation**

Copyright © 1997 IEEE. All rights reserved.

Copyright The Institute of Electrical and Electronics Engineers, Inc.
Provided by IHS under license with IEEE
No reproduction or networking permitted without license from IHS
Not for Resale

Equation (A.1) can be written as

$$U_d = U_{\text{dio}}\cos\alpha - d_x\frac{I_d}{I_{d\text{N}}}U_{\text{dioN}} \tag{A.4}$$

(An index *N* indicates the nominal value of the quantity which usually equals the rated value.) Equations (A.1) and (A.4) are, of course, equivalent and both notations are used in the literature. If the commutation reactance is expressed in pu based on the convertor transformer ac quantities and with the transformer rating equal to

$$U_{\text{dioN}} \times I_{\text{dN}} \times \frac{\pi}{3}$$

the quantities $d_x$ and $X_c$ (pu) are related through

$$d_x = \frac{1}{2}X_c(\text{pu}) \tag{A.5}$$

For small values of $\alpha$, the voltage $U_d$ is positive and the convertor feeds power into the dc system given by $U_d/I_d$. If $\alpha$ increases, $U_d$ decreases; and for an $\alpha$ value approximately equal to 90°, $U_d$ vanishes. For still greater values, the dc voltage becomes negative, which means that power is fed into the convertor from the dc-side inverter operation.

Instead of using the delay angle for specifying the inverter operation, the angle between the current extinction of the valve and the positive going zero crossing of the valve voltage is normally used. This angle is called the extinction angle and is denoted by $\gamma$. The voltage across the convertor bridge is given by

$$U_d = \frac{3\sqrt{2}}{\pi}U_{\text{vo}}\cos\gamma - \frac{3}{\pi}X_c I_d(\text{inverter}) \tag{A.6}$$

or

$$U_d = U_{\text{dio}}\cos\gamma - d_x\frac{I_d}{I_{\text{dN}}}U_{\text{dioN}} \tag{A.6-1}$$

with $U_d$ defined as positive in opposite direction from $I_d$ as shown in Figure A.2 for the inventer. Figure A.4 illustrates the dc voltage and phase currents for an inverter. Additional diagrams as for the rectifier are also given in this figure.

### A.1.4 Reactive power consumption

An important observation from Figure A.2, Figure A.3, and Figure A.4 is that the phase currents lag the phase voltages both for a rectifier and for an inverter. This means that a convertor always consumes reactive power, whether it operates as a rectifier or as an inverter. This is a generic characteristic of a line-commutated convertor. It can be shown that the reactive power consumption of a convertor is given by

$$Q_d = \frac{3\sqrt{2}}{\pi}K_q I_d U_{\text{vo}} \tag{A.7}$$


Copyright © 1997 IEEE. All rights reserved.
Copyright The Institute of Electrical and Electronics Engineers, Inc.
Provided by IHS under license with IEEE
No reproduction or networking permitted without license from IHS
Not for Resale

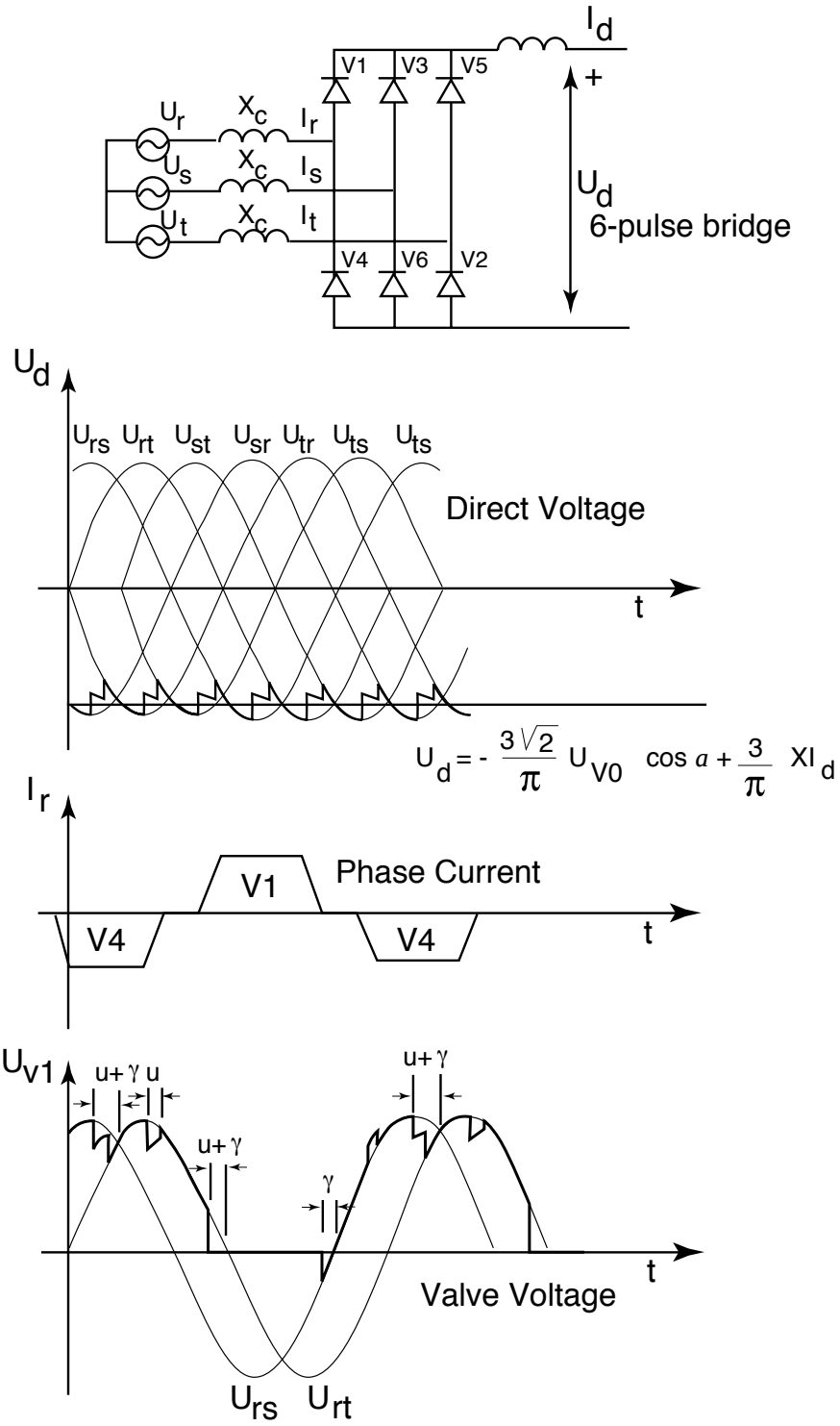


**Figure A.4—Direct voltage, phase current, and valve voltages of a six-pulse converter bridge in inverter operation**

Copyright © 1997 IEEE. All rights reserved.

Copyright The Institute of Electrical and Electronics Engineers, Inc.
Provided by IHS under license with IEEE
No reproduction or networking permitted without license from IHS
Not for Resale

or, equivalently,

$$Q_d = K_q I_d U_{\text{dio}} \tag{A.7-1}$$

with

$$K_q = \frac{1}{4} \times \frac{2\mu + \sin 2\alpha - \sin(2\alpha + 2\mu)}{\cos\alpha - \cos(\alpha + \mu)} \tag{A.8}$$

and $\mu$ is the overlap angle (radians) determined from

$$\cos\alpha - \cos(\alpha - \mu) = \sqrt{2} X_c \frac{I_d}{U_{\text{vo}}} \tag{A.9}$$

or

$$\cos\alpha - \cos(\alpha + \mu) = 2 d_x \frac{I_d}{I_{\text{dN}}} \frac{U_{\text{dio}N}}{U_{\text{dio}}} \tag{A.9-1}$$

The relationship between the angles $\alpha$, $\mu$, and $\gamma$ is

$$\alpha + \mu + \gamma = 180° \ (\pi \text{ radians}) \tag{A.10}$$

An alternative formula for the reactive power is given by

$$Q_d = U_d I_d \tan \Phi = P_d \tan \Phi \tag{A.11}$$

with

$$\tan\Phi = \frac{2\mu + \sin 2\alpha - \sin(2\alpha + 2\mu)}{\cos 2\alpha - \cos(2\alpha + 2\mu)} \tag{A.12}$$

with $\mu$ in radians; or approximately

$$\cos\Phi = \frac{1}{2}[\cos\alpha + \cos(\alpha + \mu)]$$

The angle $\Phi$ can thus be regarded as an equivalent load angle for the convertor.

Equations (A.7) through (A.12) apply to both rectifier and inverter operations. However, for inverter operation, due consideration must be taken to the signs of $P_d$ and $I_d$. For inverter operation, Equations (A7) through (A12) can also be used if $\alpha$ is replaced by $\gamma$, which is the normal way of expressing reactive power consumption for an inverter.

Figures A.5a and A.5b show the relation between $Q_d$ and $P_d$ for some different typical values of $d_x$, $x_c$, and $\alpha(\gamma)$. The dc voltage is assumed to be held at the nominal value.


Copyright © 1997 IEEE. All rights reserved.
Copyright The Institute of Electrical and Electronics Engineers, Inc.
Provided by IHS under license with IEEE
No reproduction or networking permitted without license from IHS
Not for Resale

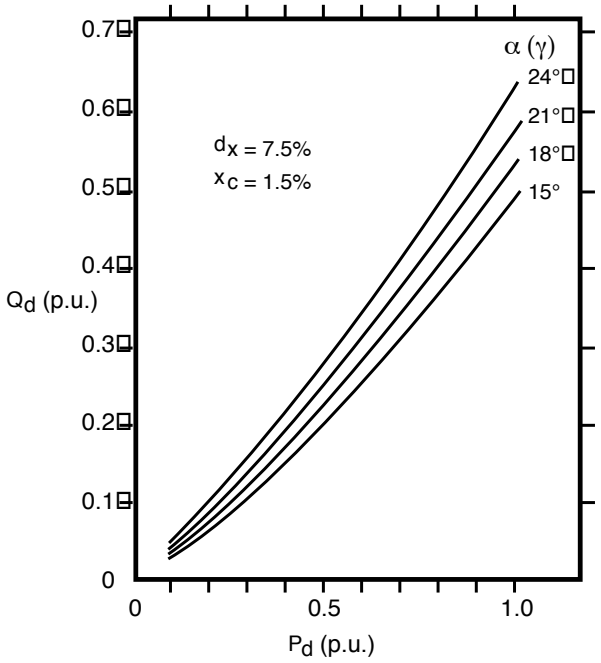


**Figure A.5a—Reactive power consumption of an HVDC convertor as a function of the active power for different values of the delay angle (α or γ)**

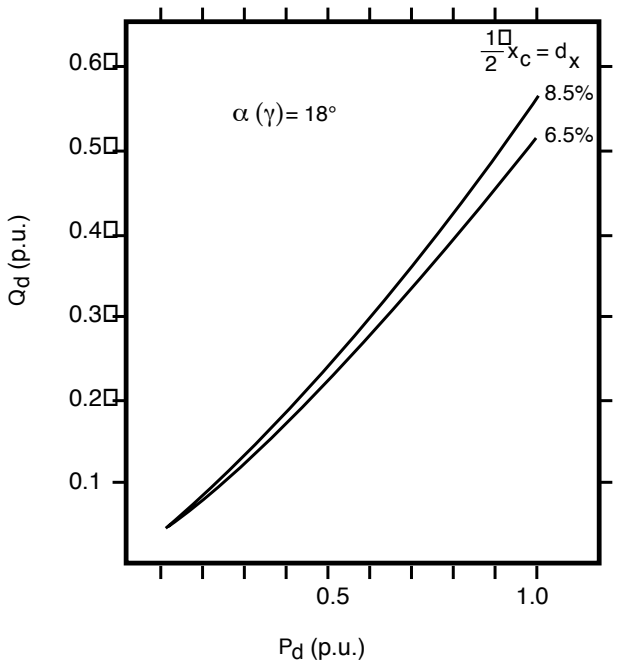


**Figure A.5b—Reactive power consumption of an HVDC convertor as a function of the active power for different values of the commutating reactance**

Copyright © 1997 IEEE. All rights reserved.

Copyright The Institute of Electrical and Electronics Engineers, Inc.
Provided by IHS under license with IEEE
No reproduction or networking permitted without license from IHS
Not for Resale

The above exact formula can be cumbersome to use for hand calculations. For most applications, the following approximate formulae give satisfactory results:

$$Q_d \approx P_d\left[\left(\frac{3\sqrt{2}}{\pi}\frac{U_{vo}}{U_d}\right)^2 - 1\right]^{1/2} \quad \text{(A.13)}$$

or

$$Q_d = \tan\left[\cos^{-1}(\cos\alpha - Kd_x)\right] \quad \text{(A.13-1)}$$

where $K = I_d/I_{dN}$

$$Q_d \approx P_d\left[\left(\frac{U_{dio}}{U_d}\right)^2 - 1\right]^{1/2} \quad \text{(A.13-2)}$$

(These formulae yield a value of the reactive power that is too high, but the error is, at maximum, a few percent for typical system parameters.)

The reactive power consumption of the convertors is of significance for the discussion in Clauses 2 and 3, and therefore the formulae above will be discussed and illustrated here. It is obvious that an increase in active power causes increased reactive power consumption if the firing angles are kept constant. A simple analysis shows also that an increase in $d_x$, $x_c$, or firing angle (extinction angle) also causes a larger reactive power consumption. A convertor with $d_x = 7.5\%$ ($x_c = 15\%$) and $\alpha(\gamma) = 18°$ consumes 0.54 pu reactive power at 1 pu active power. If the nominal $\alpha(\gamma)$ is increased to 19° the reactive power goes up to 0.56 pu. By increasing $d_x$ to 8.5% ($x_c$ to 17%), and keeping $\alpha(\gamma)$ at 18°, the reactive power rated load increases to 0.57 pu. These figures apply to steady state at rated conditions. If any variable varies [e.g., $I_d$ or $\alpha(\gamma)$], the effect on the reactive power depends on the control mode of the convertor, which is discussed in Clauses 2 and 3.

### A.1.5 Harmonic generation

As seen from Figure A.3 and Figure A.4, the phase currents and dc voltages contain harmonics, and a Fourier expansion of these shows that the current on the ac side contains harmonics of order

$$n_I = 6k \pm 1,\ k = 1, 2, \ldots \quad \text{(A.14)}$$

and the dc voltage contains harmonics of order

$$n_u = 6k,\ k = 1, 2, \ldots \quad \text{(A.15)}$$

The amplitudes of the harmonic currents and voltages are approximately proportional to the inverse of the order of the harmonic.

### A.1.6 Twelve-pulse operation

Normally, two six-pulse convertors are connected in series to obtain twelve-pulse operation. This is obtained by introducing a 30° phase shift between the convertor transformers of the two six-pulse convertors; e.g., by using one Y/Y and one Y/Δ connected transformer. By doing this, a smoother dc voltage is obtained and the total phase current becomes more sinusoidal (see Figure A.6). Ideally, harmonics of order

$$n_u = 12k,\ k = 1, 2, \ldots \quad \text{(A.16)}$$


Copyright © 1997 IEEE. All rights reserved.
Copyright The Institute of Electrical and Electronics Engineers, Inc.
Provided by IHS under license with IEEE
No reproduction or networking permitted without license from IHS
Not for Resale

are present in the dc voltage, and harmonics of order

$$n_I = 12k \pm 1,\ k = 1, 2, \ldots \quad \text{(A.17)}$$

are present in the phase currents. Harmonics of the orders given by Equations (A.14) and (A.15) and by Equations (A.16) and (A.17) are called characteristic six-pulse and twelve-pulse harmonics, respectively. Due to imperfections and unbalances in the system, harmonics of other orders occur. Also, a more detailed modeling of the components in the dc-system would show that harmonics other than the characteristic ones are created. The characteristic harmonics are usually dominating, but consideration must be taken to the non-characteristic harmonics. Filters are normally installed to filter the principal harmonics.

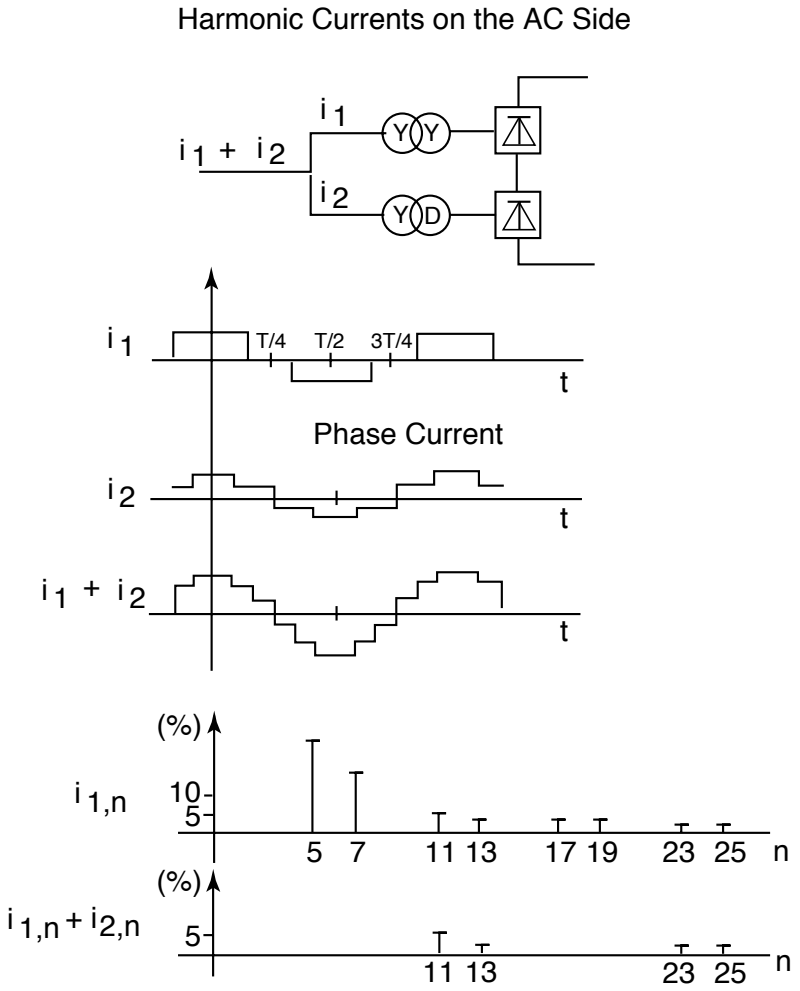


**Figure A.6—Phase currents and harmonic content of phase currents of six-pulse and twelve=pulse convertors**

## A.1.7 DC system operation

A very brief description of how a dc system, including its control system, is normally operated will be given below. A two-terminal system consists basically of a rectifier, a dc line, an inverter and a control system (see Figure A.7).

Copyright © 1997 IEEE. All rights reserved.

Copyright The Institute of Electrical and Electronics Engineers, Inc.
Provided by IHS under license with IEEE
No reproduction or networking permitted without license from IHS
Not for Resale

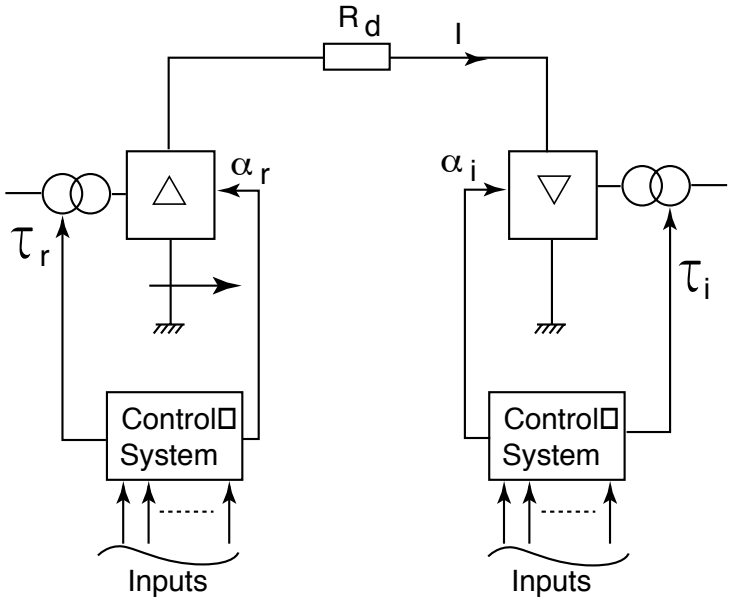


**Figure A.7—Schematic and simplified description of an HVDC system**

The dc current $I_d$ is determined by the voltage difference between the rectifier and the dc line resistance

$$I_d = \frac{U_{d\mathrm{R}} - U_{d\mathrm{I}}}{R_d} \tag{A.18}$$

The voltages $U_{d\mathrm{R}}$ and $U_{d\mathrm{I}}$ are given by Equations (A.1) and (A.6), respectively, and can consequently be controlled by the firing angles of the convertors. Normally, the inverter is operated in such a way that γ is at the minimum permissible value, $\gamma_{\min}$ (see A1.4), which is in the range 15°–18°. In real time (i.e., microseconds), a minimum extinction angle, $\gamma_{\min}$, of 15° for a 50 Hz system is equivalent to 18° for a 60 Hz system (833 μs). By doing this, the reactive power consumption of the inverter is minimized and the cost of the valves is minimized. The desired value of the dc current is now obtained by adjusting the firing angle in the rectifier. To minimize the losses of the dc line, the dc voltage should be as high as possible. Since γ is at the minimum value, the voltage is controlled by changing the turns ratio of the inverter convertor transformers by the tap changers. The tap changers are also used in the rectifier in such a way that the firing angle is typically around 15°, so that for small ac voltage variations the rectifier can maintain the required current without waiting for tap changer action.

The current order to the current controller is either obtained directly as an input; e.g., from the dispatcher, or from a power controller. The power controller determines the current order through

$$I_{\mathrm{do}} = \frac{P_{\mathrm{do}}}{U_d\mathrm{meas}} \tag{A.19}$$

with obvious notation. Usually some filtering is included in the measurement of $U_d$ to avoid action due to fast transients.


Copyright © 1997 IEEE. All rights reserved.
Copyright The Institute of Electrical and Electronics Engineers, Inc.
Provided by IHS under license with IEEE
No reproduction or networking permitted without license from IHS
Not for Resale

## A.2 Commutation failures

From the ac system point of view, it is important that the behavior of the dc system during transients and disturbances in the system is such that the stability and performance of the overall system is maintained. To avoid this, special consideration must be taken. A phenomenon that plays an important role in this context is the commutation failure that is briefly discussed here.

To establish a forward blocking capability of a valve, the stored charges in the thyristors established during the conduction interval must be removed. Therefore, the valve requires a certain negative voltage-time area, before it can exhibit a forward blocking capability. This imposes no problem for a rectifier, but could cause difficulties during inverter operation. As discussed above, it is desirable to keep $\gamma$ as small as possible, and if for some reason (e.g., a sudden reduction of the ac voltage in the inverter) the forward blocking capability is not established before the zero-crossing of the valve voltage, a commutation failure will occur as explained below.

Consider a commutation from valve V1 to valve V3 in Figure A.8. Assume that after the firing of valve V3 some disturbance in the voltage occurs that reduces the remaining voltage-time area for valve V1 in such a way that no forward blocking capability is obtained for valve V1. Consequently, the current through valve V1 starts to increase while the current through valve V3 reduces to zero again. The next commutation that will take place is from valve V2 to valve V4. If this commutation is successful, this indicates that both valves V1 and V4 are conducting current at the same time and that the six-pulse bridge is short-circuited on the dc side.

The dc current will now increase and the dc line will be discharged through the by-pass pair. The dc voltage across the six-pulse group will remain zero until the current is commutated from valve V4 to V6. At this time the dc voltage starts to increase, following commutations take place in a normal way, and normal operation is resumed. Since the dc voltage is zero during a period of time following the commutation failure, no active power will be transmitted during this time. This might impose a substantial disturbance on the ac system. If the system is weak, this loss of power could cause such severe disturbances on the ac system that it results in consequential commutation failures. It is therefore of great importance that the system is designed in such a way that commutation failures are avoided for frequent disturbances in the ac system.

The minimum permissible commutation margin, $\gamma_{min}$, is determined from the negative voltage-time area required for thyristors to exhibit forward blocking capacity. When determining $\gamma_{min}$ consideration must be given to the asymmetries in the voltage distribution of series-connected thyristors, security margins, variation in component values, etc.

Copyright © 1997 IEEE. All rights reserved.

Copyright The Institute of Electrical and Electronics Engineers, Inc.
Provided by IHS under license with IEEE
No reproduction or networking permitted without license from IHS
Not for Resale

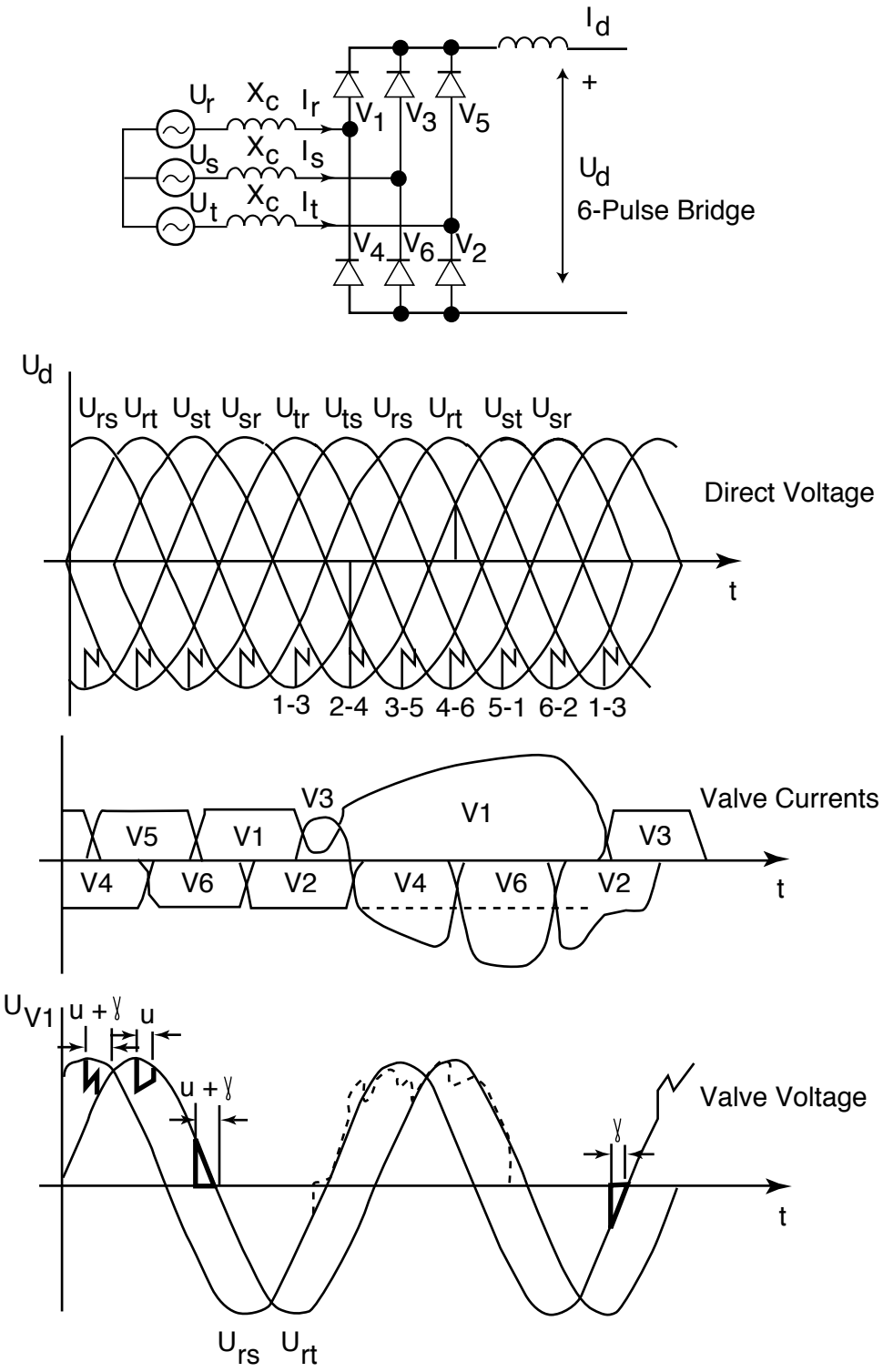


**Figure A.8—Direct voltage, valve currents, and valve voltages during a commutation failure in a convertor bridge**


Copyright © 1997 IEEE. All rights reserved.
Copyright The Institute of Electrical and Electronics Engineers, Inc.
Provided by IHS under license with IEEE
No reproduction or networking permitted without license from IHS
Not for Resale

# Annex B

(informative)

# Bibliography

[B1] Adapa, R., and Reeve, J., "Diagnosis of the response of a dc system to symmetrical and non-symmetrical ac faults," *Proceedings of the IEEE MONTECH '86 Conference on HVDC Power Transmission,* Montreal, pp. 35–38, Sept. 1986.

[B2] Ainsworth, J. D., "Core-saturation instability in the Kingsnorth HVDC link," *CIGRÉ SC 14,* June 1977.

[B3] Ainsworth, J. D., "Developments in the phase-locked oscillator control system from HVDC and other large convertors," IEE Conference Publication, no. 255, pp. 98–103, Sept. 1985.

[B4] Ainsworth, J. D., "Harmonic instabilities," *International Conference on Harmonics in Power Systems,* Manchester, pp. 76–85, 1981.

[B5] Ainsworth, J. D., "Harmonic instability between controlled static convertors and AC networks," *Proceedings of the IEE,* vol. 114, no. 7, pp. 949–957, July 1967.

[B6] Ainsworth, J. D., "The phase locked oscillator—a new control system for controlled static rectifiers," *IEEE Transactions on Power Apparatus and Systems,* vol. PAS-87, pp. 859–864, 1968.

[B7] Ainsworth, J. D., "Power Limit Instability (voltage instability) in a DC link connected to a weak AC system." *CIGRÉ SC14 Colloquium,* England, 1985.

[B8] Ainsworth, J. D., "The recovery of HVDC convertors after faults," *CIGRÉ SC14 Colloquium,* England, 1985.

[B9] Ainsworth, J. D., Gavrilovic, A., and Thanawala, H. L., *Static and synchronous compensators for DC transmission convertors connected to weak AC systems,* 31.01, CIGRÉ 1980.

[B10] Ainsworth, J. D., and Martin, C. J. B., "The influence of HVDC links on power systems," *GEC Journal of Science and Technology,* vol. 44, no. 1, 1977.

[B11] Andersson, G., *Proceedings of CIGRÉ Session 1986,* Group 14 Discussion, Preferential Subject 1, Question 1.7, Discussion by G. Andersson.

[B12] Arrillaga, J., Al-Khashali, H. J., and Compas-Barros, J. G., "General formulation for dynamic studies in power systems including static convertors," *Proceedings of the IEE,* 124, no. 11, pp. 1047–1052, 1977.

[B13] Bahrman, M. P., Larsen, E. V., Piwko, R. J., and Patel, H. S., "Experience with DC-turbine-generator torsional interaction at Square Butte," *IEEE Transactions on Power Apparatus and Systems,* vol. PAS-99, pp. 966-975, May–June 1980.

[B14] Bahrman, M. P., Larsen, E. V., Piwko, R. J., Patel, H. S., Hauth, R. L., and Breuer, G. D., "DC-turbine-generator torsional interactions—a new design consideration," *CIGRÉ Report 14-04,* 1980.

[B15] Billon, V. C., Taisne, J. P., Arcidiacono, V., and Mazzoldi, F., "The Corsican tapping: From design to commissioning tests of the third terminal of the Sardina-Corsica-Italy HVDC link," *IEEE 1988 Summer Meeting*.

Copyright © 1997 IEEE. All rights reserved.

Copyright The Institute of Electrical and Electronics Engineers, Inc.
Provided by IHS under license with IEEE
No reproduction or networking permitted without license from IHS
Not for Resale

[B16] Billon, V. C., Taisne, J. P. Charles, P., and Gruson, J. P., "Liaison multiterminale SACOI: Essais de mise en service de la station de conversion de Lucciana," *CIGRÉ Report 14-12,* 1988.

[B17] Bornard, P., Souque, D., and Vielpeau, D., "Torsional interactions between the gravelines units and the 2000 MW Cross-Channel dc link: Protection of the turbine-generator units," CIGRÉ paper, 1988.

[B18] Bowler, C. E. J., Demcko, J. A., Mankoff, L., Kotheimer, W. C., and Cordray, D., "The Navajo SMF type subsynchronous resonance relay," *IEEE Transactions on Power Apparatus and Systems,* vol. PAS-97, pp. 1489–1495, Sept./Oct. 1978.

[B19] Brewer, G.L., and Rowe, B.A., "AC/DC interactions on the 2000 MW UK–France (Cross Channel) HVDC link," *CIGRÉ Symposium,* Boston, 28–30 Sept. 1987.

[B20] Chapman, D. G., "Model verification," Panel Session on HVDC Modelling For Power System Stability," *IEEE 1987 Winter Meeting,* New Orleans.

[B21] CIGRÉ WG 33.05, "Application guide for insulation coordination and arrester protection of dc convertor stations," *Electra No. 96*.

[B22] *Compendium on HVDC Schemes Throughout the World,* CIGRÉ Technical Brochure No. 3, Edited by SC 14 WG 04, 1987.

[B23] Cresap, R. L., and Mittelstadt, W. A., "Small-signal modulation of the Pacific HVDC Intertie," *IEEE Transaction on Power Apparatus and Systems,* vol. PAS-95, no. 2, Mar./ Apr. 1976.

[B24] Cresap, R. L., Mittlestadt, W. A., Scott, D. N., and Taylor, C. W., "Damping of the Pacific AC Intertie oscillations via modulation of the parallel Pacific HVDC Intertie," *CIGRÉ Report 14-05,* Paris, 1978.

[B25] Ekstrom, A., "Transferred harmonics," *CIGRÉ SC 14,* 1986.

[B26] *Electrical Transmission and Distribution Reference Book,* Westinghouse Electric Corporation, Chapter 22, 1964.

[B27] Ellert, F. J., Grund, C. E., Homer, D. L., Patel, H. S., and Schener, S. D., "Stabilization of dc systems by modulating HVDC system power flow," presented at the *All-India Symposium of HVDC,* Bombay 1978.

[B28] EPRI EL-2708, "HVDC system control for damping of subsynchronous oscillations," Project 1425-1, Final Report, Oct. 1982.

[B29] Erche, M., et al., "Reactive power control in ac/dc systems by dc convertor station." *CIGRÉ SC 14/38 Symposium,* Boston, Sept. 28–30, 1987.

[B30] Fehrle, K. G., and Lasseter, R. H., "Simulation of control systems and applications to HVDC convertors," *IEEE Tutorial Course,* IEEE Publication No. 81, EHO 173-5-PWR.

[B31] Fick H., "Excitation of subsynchronous torsional oscillations in turbine generator sets by a current source inverter," *Siemens Power Eng.,* 4, pp. 83–86, 1982.

[B32] Figueiredo, A. G., Praca, A. A. S., and Shore, N. L., "Master control of the Itaipu HVDC transmission system," Paper presented at the *International Symposium on HVDC Technology: "Sharing the Brazilian Experience,"* Rio de Janeiro, Brazil, 20–25 Mar., 1983.

[B33] Fink, J. L., Pohl, R. V., Ryder, F. H., and Stairs, C. M., "System design considerations of the Eel River HVDC convertor stations," *CIGRÉ Report 14-05,* Paris, 1982.



Copyright © 1997 IEEE. All rights reserved.
Copyright The Institute of Electrical and Electronics Engineers, Inc.
Provided by IHS under license with IEEE
No reproduction or networking permitted without license from IHS
Not for Resale

[B34] Forest, R., Heyner, G., Kanngiesser, K. W., and Waldmann, H., "Some aspects of controlling multi-terminal HVDC transmission systems," *CIGRÉ SC 10,* Apr. 1967.

[B35] Franken, B., and Anderson, G., "Analysis of dc convertors connected to weak ac systems," *IEEE Transactions of Power Systems,* vol. PAS-5, no. 1, 1990.

[B36] Gavrilovic, A., "Interaction between ac and dc systems," *CIGRÉ Report 14.09,* 1986.

[B37] Gavrilovic, A., et al., "Interaction between dc and ac systems," *CIGRÉ SC 14/38 Symposium,* Boston, Sept. 28–30, 1987.

[B38] Gavrilovic, A., et al., "Some aspects of AC/DC system interaction." *Proceedings of the IEEE MONTECH '86 Conference on HVDC Power Transmission,* Montreal, Sept. 1986.

[B39] Gels, H. B., Kanngiesser, K. W., Ring, H., and Wess, T., "Transient behavior of a series-connected HVDC tapping substation," *CIGRÉ Study Committee Meeting,* Vienna/Austria, 1983.

[B40] Goosen, P. V., and Becker, W., "Report on the equipment of the Cabora Bassa scheme—control and protection system," *CIGRÉ SC14 Meeting,* Johannesburg, Oct. 1975.

[B41] Grund, C. E., "Dynamic performance characteristics of North American HVDC systems for transient and dynamic stability evaluation," IEEE Committee Report, *IEEE Transaction on Power Apparatus and Systems,* vol. PAS-100, no. 7, July 1981.

[B42] *Guidelines for the Application of Metal Oxide Arresters Without Gaps for HVDC Converter Stations,* CIGRÉ Technical Brochure No. 34, Edited by SC 33/14 WG 05, 1987.

[B43] Hammad, A., "A new approach for the analysis and solutions of ac voltage stability problems at dc terminals," *Proceedings of the IEEE MONTECH '84 Conference on HVDC Power Transmission,* Montreal, Sept. 1984.

[B44] Hammad, A., Szechtman, M., "AC voltage stability at dc terminals connected to weak ac systems," *CIGRÉ SC 14 Colloquium,* England, 1985.

[B45] Haywood, R. W., and Chand, J., "Response of the Nelson River HVDC system to disturbances on the receiving end ac network," *CIGRÉ Report 14-04,* 1984.

[B46] Hedin, R., and Stump, K., "Effect of series capacitors on dc control system torsional interaction," *Proceedings of International Conference on DC Power Transmission,* pp. 98–104, Montreal, Canada, June 1984.

[B47] Hegi, J., Bahrman, M., Scott, G., and Liss, G., "Control at the Quebec-New England multi-terminal HVDC system," CIGRÉ Report 14-04, Paris, 1988.

[B48] Hingorani, N. G., Nilsson, S., Bahrman, M. P., Reeve, J., Larsen, E. V., and Piwko, R. J., "Analysis of subsynchronous frequency interactions involving dc transmission systems," IEEE Publication No. 80 CH 1624-6, presented at the *International Conference on Overvoltages and Compensation on Integrated AC–DC Systems,* Winnipeg, Manitoba, July 1980.

[B49] Hingorani, N. G., Nilsson, S., Bahrman, M. P., Reeve, J., Larsen, E. V., and Piwko, R. J., "Subsynchronous frequency stability studies of energy systems which include dc transmission," *U.S. Department of Energy Symposium on Incorporating DC Power Transmission Into System Planning,* Phoenix, Arizona, Mar. 1980.

Copyright © 1997 IEEE. All rights reserved.

Copyright The Institute of Electrical and Electronics Engineers, Inc.
Provided by IHS under license with IEEE
No reproduction or networking permitted without license from IHS Not for Resale

[B50] Jotten, R., Bowles, J. P., Liss, G., Martin, C. J. B., and Rumpf, E. "Control in HVDC systems, Part I," *CIGRÉ SC 14-10*, 1978.

[B51] Kaufhold, W., et al., "Control of temporary overvoltages in ac/dc systems by metal-oxide limiter," Paper 200-12, *CIGRÉ Symposium,* Boston, 28–30 Sept. 1987.

[B52] Kimbark, E. W., *Direct Current Transmission*, New York: John Wiley & Sons, 1971.

[B53] Kitchin, R. H., "New method for digital computer evaluation of convertor harmonics in power systems using state variable analysis," *Proceedings of the IEE,* Pt. C, 128(4), pp. 196–207, 1981.

[B54] Knaak, H. J., and Venne, A., "Improving the stability of HVDC transmission to weak networks," Paper presented to the Canadian Electrical Association (CEA) Meeting in Vancouver, 23–26 Mar. 1987.

[B55] Koschik, V., et al. "Influence of various factors on recovery performance of a dc system feeding into a weak ac system," *Proceedings of the IEEE MONTECH '86 Conference on HVDC Power Transmission,* Montreal, Sept. 1986

[B56] Lambrecht, D., and Kulig, T., "Torsional performance of turbine generator shafts especially under resonance conditions," *IEEE Transactions on Power Apparatus and Systems,* PAS-101, pp. 3689–3697, 1982.

[B57] Lamm, U., Uhlmann, E., and Danfors, P., "Some aspects of tapping of HVDC transmission," *Direct Current,* vol. 8, no. 5, 1963.

[B58] Larsen, E. V., Baker, D. H., and McIver, J. C., "Low order harmonic interaction on ac/dc schemes," *IEEE Transactions on Power Delivery,* vol. 4, no. 1, pp. 493–501, Jan. 1989.

[B59] Le D, A. "The French experience in the multiterminal dc links," Report 87 JC-48, *IEEE/CSEE joint conference on high voltage transmission systems in China,* Beijing, 17–22 Oct.1987.

[B60] Liss, G., and Smedsfelt, S., "HVDC links for connection to isolated ac networks," Paper presented to the U.N. Economic Commission for Europe, *Seminar on High Voltage Direct Current (HVDC) Techniques,* Stockholm, Sweden, 6–9 May 1985.

[B61] Mortensen, K., Larsen, E. V., and Piwko, R. J., "Field tests and analysis of torsional interactions between the coal creek turbine-generators and the CU DC system," *IEEE Transactions on Power Apparatus and Systems,* vol. PAS-100, pp. 336–344, Jan. 1981.

[B62] Nyati, S., et al., "Comparison of voltage control devices at dc convertor stations connected to weak ac systems." *IEEE 1987 Winter Meeting,* New Orleans, Paper 87 WM, pp. 159–7.

[B63] Persson, E., "Calculation of transfer functions on grid- controlled convertor systems," *Proceedings of the IEE*, 117(5), pp. 989–997, 1970.

[B64] Pilotto, L. A. S., Szechtman, M., and Selado, E., "The problem of voltage collapse in ac/dc systems," Symposium of Specialists in Electric Operational Planning, Brazil 1987.

[B65] Piwko, R. J., and Larsen, E. V., "DC system control for damping of subsynchronous oscillations," *EPRI Report EL-2708,* Oct. 1982.

[B66] Piwko, R. J., and Larsen, E. V., "DC system control for damping of subsynchronous oscillations," *IEEE Transactions on Power Apparatus and Systems,* vol. PAS-101, pp. 2203–2211, July 1982.


Copyright © 1997 IEEE. All rights reserved.
Copyright The Institute of Electrical and Electronics Engineers, Inc.
Provided by IHS under license with IEEE
No reproduction or networking permitted without license from IHS
Not for Resale

[B67] Piwko, R. J., Nozari, F., Hauth, R. L., and Flarity, C. W., "Control Systems for Application in HVDC Terminals at AC System Locations Having Low Short Circuit Capacities," *Proceedings of the IEEE MONTECH '86 Conference on HVDC Power Transmission,* Montreal, 29 Sept.–1 Oct. 1986.

[B68] Porangaba, H. D., et al., "Itaipu HVDC Transmission System—Stability Studies for a Weak AC Receiving System," *Proceedings of the IEEE MONTECH '86 Conference on HVDC Power Transmission,* Montreal, 29 Sept–1 Oct. 1986.

[B69] Povh, D., and Schultz, W., "Analysis of overvoltages by transformer magnetizing inrush current," Paper F 77 717-2, *IEEE 1977 Summer Meeting,* Mexico City.

[B70] Presson, E., "Calculations of transfer functions in grid controlled convertor systems," *Proceedings of the IEEE,* vol. 117, no. 5, May 1970.

[B71] "Proposed terms and definitions for power systems stability," *IEEE Transactions on Power Apparatus Systems,* vol. PAS-101, no. 7, pp. 1894–1898, July 1982.

[B72] Reichert, K., Terens, L., Durr, J., and Pfyl, W., "Harmonic interaction between static VAR system and the network: problems analysis and solutions," International Symposium on controlled reactive compensation, Varennes, Canada, pp. 142–173, 19–21 Sept. 1979.

[B73] Rowe, B. A., and Brewer, G. L., "Response of the 2000 MW Cross Channel HVDC Link to Major Disturbances," *CIGRÉ Report 14-08*, Paris, 1988.

[B74] Stemmler, H., "HVDC back to back interties on weak ac system, second harmonic problems, analysis and solutions." Paper 300-08, CIGRÉ Conference on AC/DC Transmission Interactions and Comparisons, Boston, 28–30 Sept. 1987.

[B75] Svensson, S., and Mortensen, K., "Damping of subsynchronous oscillations by a dc link: A dc simulator study," *IEEE Transactions on Power Apparatus and Systems,* vol. PAS-100, pp. 1431–1439, Mar. 1981.

[B76] Szechtman, M., Ping, W. W., Salgado, E., and Bowles, J. P., "Unconventional HVDC control technique for stabilization of a weak power system," *IEEE Transactions on Power Apparatus and Systems,* vol. PAS-103, no. 8, Aug. 1984.

[B77] Taisne, J. P., "Sardinia-Corsica-Italy system tapping," Paper presented at the panel session on Practical Aspects of Multiterminal DC Systems, *IEEE PES Winter Meeting,* 1988.

[B78] Thio, C. V., "Cause of bipole 2, 90 Hz oscillation," Private communication to Joint Task Force (CIGRÉ Working Group 14.07, AC/DC System Interactions, and IEEE Working Group 15.05.05, Interaction with Low SCR AC Systems).

[B79] Thio, C. V., "Nelson River HVDC bipole—Two Part I—System aspects," *IEEE Transactions on Power Aparatus and Systems,* vol. PAS-98, no. 1, pp. 165–173, Jan./Feb. 1979.

[B80] Thio, C. V., et al., "HVDC and weak ac systems—utility view," *CIGRÉ SC14 Colloquium,* England, 1985.

[B81] Uhlmann, E., "Convertors connected to networks with limited short circuit capacity" (in German), *Archive fur Electrotechnik,* 1981.

[B82] Uhlmann, E., *Power Transmission by Direct Current*, Berlin, Heidelberg, New York: Springer-Verlag, 1975.

Copyright © 1997 IEEE. All rights reserved.

Copyright The Institute of Electrical and Electronics Engineers, Inc.
Provided by IHS under license with IEEE
No reproduction or networking permitted without license from IHS Not for Resale

[B83] *The Visual Perception and Tolerance of Flicker,* Utilities Coordinated Research, Inc., New York, 1937.

[B84] Woodford, D. A., Gole, A. M., and Menzies, R. W., "Digital simulation of DC links and AC machines," *IEEE Transactions on Power Apparatus and Systems,* vol. PAS-102, no. 6, pp. 1616–1623, June 1983.

[B85] Yacamini, R., "How dc schemes can excite torsional oscillations in turbo-alternator shafts," *Proceedings of the IEE,* Pt. C, 133(6), pp. 301–307, Sept. 1986.

[B86] Yacamini, R., "How HVDC schemes can excite torsional oscillations in turbo-alternator shafts," *Proceedings of the IEE,* Pt. C, 133(6), pp. 301–307, Sept. 1986.

[B87] Yacamini, R., and De Oliveria, J. C., "Comprehensive calculation of convertor harmonics with system impedance and control representation," *Proceedings of the IEE,* 133(2), pp. 95–102, 1986.

[B88] Yacamini, R., and De Oliveria, J. C., "Instability in HVDC schemes at low-order integer harmonics," *Proceedings of the IEE,* Pt. C, 127(3), 1980, pp. 179–180.

[B89] Yacamini, R., and Resendet, J. W., "Thyristor controlled reactors as harmonic sources in HVDC convertor stations and ac systems," *Proceedings of the IEE,* Pt. B, 133(4), pp. 263–169, July 1986.



Copyright © 1997 IEEE. All rights reserved.
Copyright The Institute of Electrical and Electronics Engineers, Inc.
Provided by IHS under license with IEEE
No reproduction or networking permitted without license from IHS
Not for Resale

# IEEE Guide for Planning DC Links Terminating at AC Locations Having Low Short-Circuit Capacities Part II: Planning Guidelines

## 1. Overview

### 1.1 Scope

Part I of the guide discusses the effects of various aspects of the ac/dc interactions on the design and performance of dc schemes where the ac system appears as a high impedance at the ac/dc interface bus; i.e., low and very low short-circuit (short-circuit ratio ([SCR]) conditions. AC systems having zero or inadequate mechanical rotational inertia, such as island schemes with no or with limited local generation, are also considered. Environmental, siting, and construction issues are not addressed. General issues, such as steady-state reactive compensation and ac and dc filter requirements, are not in the scope of this guide, but would be included in a complete study for a particular dc scheme design. In order to assist those not familiar with dc transmission and convertors, a brief description of basic rectifier and inverter operation is given in Annex A of Part I.

Part II of this guide, which is bound together with Part I, considers how the ac/dc interaction phenomena described in Part I should be taken into account in the planning and the preliminary design of ac/dc systems having low or very low SCR values.

### 1.2 Purpose

The purpose of Part II of this guide is to apply the factors addressed in Part I (those aspects to be considered in the design of a dc transmission scheme in the context of system interaction resulting from the dc link terminating at an ac location having one or both of low short-circuit capacities relative to dc power infeed or ac system inertia low enough to be a concern for satisfactory dc system operation). Specifically, Part II considers the special precautions and studies in the planning stage of a dc system and provides examples from existing schemes operating with what has been defined in Part I as *low and very low SCRs*.

### 1.3 General

Beyond the basic consideration of power transfer, the planning and design of a dc project takes into account several ways in which the dc and associated ac system interact at the converter stations. As the strength of the ac system reduces (characterized, for example, by the ac short-circuit level relative to the dc power), certain interactions tend to become more pronounced and consequently demand more attention. It is in this context that Part II is concerned with identifying the interactions and provides guidance on their successful accommodation.

It will be evident that there are many facets of ac/dc interaction and several that are emphasized by low and very low SCRs. For each facet, the dividing line between high SCRs and what can be considered as low is



Copyright The Institute of Electrical and Electronics Engineers, Inc.
Provided by IHS under license with IEEE
No reproduction or networking permitted without license from IHS
Not for Resale

not clear cut, and the extent of concern is application-dependent. Also, some dc systems, which normally operate with a high SCR, operate with a low or very low SCR during contingency conditions. It is perhaps of some reassurance to note that the particularly low SCRs appertaining to some schemes, which have been put into service in the last few years, have not prevented successful operation. Furthermore, as will become evident in Clause 8, dc has been successful in some cases where the low SCR has precluded an ac link. It is hoped that this guide will assist in the successful realization of schemes that at first glance may appear to have severe short-circuit limitations.

There is common ground in planning and design studies of dc systems irrespective of the strength of the ac systems. It is inevitable that the users of Part II will rely on their own judgment in interpreting and weighing the relative importance of the various issues for the application at hand.

## 2. References

This standard shall be used in conjunction with the following publications. When the following standards are superseded by an approved revision, the revision shall apply:

IEC 60919-1 (1988-12), Performance of high-voltage d.c. (HVDC) systems—Part 1: Steady-state conditions.[1]

IEC 60919-2 (1990-10), Performance of high-voltage d.c. (HVDC) systems—Part 2: Faults and switching. (Equivalent to IEEE P1030.2/D4, Dec. 1990.[2])

IEC 60919-3... [3], Performance of high-voltage d.c. (HVDC) systems—Part 3: Dynamic conditions.

## 3. Performance criteria and evaluation

### 3.1 General considerations

Acceptable operation of a dc system, in broad terms, may be defined as smooth operation, without causing operational problems for the associated ac power system(s) and without resulting in a significant inconvenience for power system operators. Defining acceptable performance criteria is, therefore, an important first step in planning a dc system.

Inasmuch as the performance of a dc system greatly depends on inherent characteristics of both the dc and associated ac systems, it is necessary to conduct appropriate planning studies to determine the dc system performance criteria considering flexibility and limitations of dc systems, as well as the requirements of the ac systems in which they are embedded.

In evaluations of performance of low and very low SCR dc applications, it may be necessary to focus on cost versus performance criteria more than for high SCR applications (e.g. higher overvoltages and longer recovery times). In the final analysis, the selection of acceptable levels of performance involves a cost versus benefit assessment to ensure the correct balance between over- and under-building of the system.

---

[1]IEC publications are available from IEC Sales Department, Case Postale 131, 3, rue de Varembé, CH-1211, Genève 20, Switzerland/Suisse. IEC publications are also available in the United States from the Sales Department, American National Standards Institute, 11 West 42nd Street, 13th Floor, New York, NY 10036, USA.

[2]Numbers preceded by P are IEEE authorized standards projects that were not approved by the IEEE Standards Board at the time this publication went to press. For information about obtaining drafts, contact the IEEE.

[3]This IEC standard was not published at the time this IEEE standard went to press. Publication is expected in spring of 1998. For information about obtaining a draft, contact the IEC.


Copyright © 1997 IEEE. All rights reserved.
Copyright The Institute of Electrical and Electronics Engineers, Inc.
Provided by IHS under license with IEEE
No reproduction or networking permitted without license from IHS
Not for Resale

This clause is primarily concerned with performance criteria for low and very low SCR situations. There is concern about the effect on the ac system during normal operation (e.g., reactive supply, voltage control, voltage change during reactive switching) and as a result of contingencies (e.g., commutation failure, ac faults, temporary and permanent dc faults). There can also be effects that are applicable to dc applications in general. Details of the phenomena upon which the performance criteria are based are provided in Part I of this guide. Examples of specific systems with low or very low SCRs will be presented in Part II, Clause 8.

In the evaluation of each performance criterion, it is prudent to impose requirements judiciously in order to minimize problems, such as complaints from the general public or operating restrictions, while at the same time avoiding over-design and consequent unnecessary expense.

Following the resolution of the performance criteria to be utilized for an application, it is then necessary to undertake studies to ensure that decisions during the design process are consistent with meeting the performance criteria. Finally, when the completed system undergoes testing, it is necessary that all of the critical performance criteria be demonstrated by comprehensive system tests.

## 3.2 Power transfer limits and SCR

### 3.2.1 Voltage and phase angle stability

In Part I, 3.1 it was shown that consideration of ac voltage stability (also known as the voltage collapse phenomenon) also is relevant to operation of ac/dc systems, particularly at inverter stations. It was also shown that dc control can prevent voltage instability.

The asynchronous nature of a dc link is independent of phase differences between the ac terminations. Furthermore, converter control can benefit the phase angles between generators.

### 3.2.2 Maximum power curve (MPC) and maximum available power (MAP)

The MPC shown in Figure 3-1 defines the $P_d/I_d$ characteristic for dc converters (see Part I: 2.2.2 and 3.1), and is analogous to the P-V or Q-V curves used to illustrate ac voltage stability. For a given SCR, the MPC describes the relation between dc current and power for specified initial operating conditions and parameters of the converter station.

The MPC is derived as follows: for a selected initial operating point (usually with dc power, dc current, and ac voltage at the inverter ac bus set to 1.0 pu), the dc current is varied while maintaining constant the ac source voltages, the tap positions of the converter transformers, and the combined capacitance of shunt capacitors and ac filters at fundamental frequency, while the inverter extinction angle $\gamma$ remains set to its minimum value. As seen in Figure 3-1, this means that the ac converter bus voltage will change. Meanwhile, the rectifier is assumed to cater for dc current changes independent of the inverter performance.

The MPC thus corresponds to a situation where the dc current deviates from an initial nominal operating point and modifies the ac bus voltage within a time scale where generator voltage control, any variable shunt compensation or tap changers have not yet responded to further influence the ac bus voltage. Since it is assumed that the dc current control acts instantaneously, with the ac system being considered as Thévenin sources, the model can be regarded as quasi-steady-state and does not model fast controlled ac dynamics. (For a fuller explanation and appropriate ac system modeling, see Part I: 2.2.2 and 2.2.5.)

The peak of the MPC in Figure 3-1 has been defined in Part I as the MAP for which $dP_d/dI_d = 0$. The corresponding current is termed $I_{MAP}$. Should the dc current exceed $I_{MAP}$, the slope is negative, implying that the increase in reactive power consumption depresses the ac converter bus voltage sufficiently to decrease the inverter active power, i.e., $P_d$. Thus, for the selected converter parameters and reactive compensation, MAP depends on the ac system impedance. It also follows that power control would be unstable for the assumed conditions (including constant $\gamma$ control) if $I_d$ were to exceed $I_{MAP}$.

Copyright © 1997 IEEE. All rights reserved.

Copyright The Institute of Electrical and Electronics Engineers, Inc.
Provided by IHS under license with IEEE
No reproduction or networking permitted without license from IHS
Not for Resale

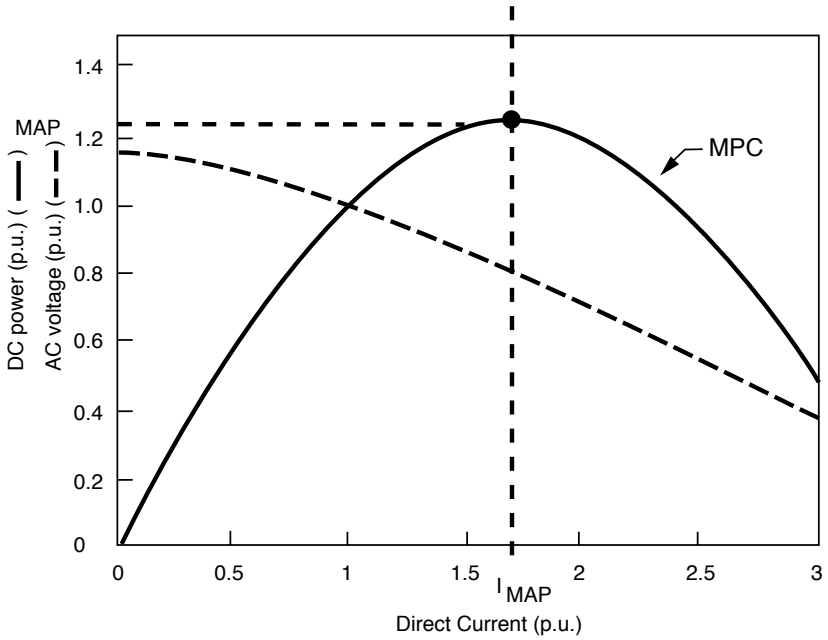


**Figure 3-1—Maximum power curve (MPC) and ac voltage**

### 3.2.2.1 Critical short-circuit ratio (CSCR)

For a given dc system, different effective short-circuit ratios (ESCR) (see Part I: 2.2.3) produce different MPCs and correspondingly different values of $I_{MAP}$. The borderline ESCR for stable constant power/constant γ control is termed the critical ESCR (CESCR), which corresponds to the specific MPC on which MAP coincides with the actual operating point; i.e., the starting point for constructing the MPC coincides with MAP at the per unit operating values of dc current and converter ac bus voltage (for example, 1.0 pu dc current and 1.0 pu ac voltage).

For the same dc parameters, the MPC curve for an ESCR above the CESCR would indicate operation at less than $I_{MAP}$ for the dc current corresponding to the operating point, the difference being an effective margin of stability for modulating current to achieve power control with constant γ. This is an important criterion in planning either for power modulation to damp power swings in the associated dc system, or to accommodate discrete increases of dc power above the nominal level.

The CSCR can be derived from the CESCR by adding the per-unit reactive shunt compensation. Since the CESCR and CSCR define the ac system that would produce them for nominal dc operation, they can be derived from the dc study parameters (see 4.2.1) without ac system data other than the assumption that the corresponding ac/dc load flow provides the desired ac converter bus voltage.

### 3.2.2.2 Operation with an SCR less than the critical value

The above criteria assume control to keep γ constant. Should the SCR unavoidably be less than the CSCR, so that the operating dc current is greater than $I_{MAP}$, the prospect of unstable operation may be avoided by one or more of the following:

a) Retaining power control but achieving it in conjunction with modified inverter control (variable γ above $\gamma_{min}$).


Copyright © 1997 IEEE. All rights reserved.
Copyright The Institute of Electrical and Electronics Engineers, Inc.
Provided by IHS under license with IEEE
No reproduction or networking permitted without license from IHS
Not for Resale

b) Fast control of the inverter ac voltage by an auxiliary device such as an static var compensator (SVC).
c) The installation of synchronous compensation at the inverter station sufficient to effectively increase the SCR and thereby increase $I_{MAP}$ to exceed the required dc operating current on the new MPC.

#### 3.2.2.3 MPC for a rectifier

Equivalent MPCs can be derived for a rectifier on the assumption of an initial rectifier ac voltage and rectifier control to maintain a constant minimum delay angle (while the inverter controls the current). This would be of relevance to an assessment of whether there would be any power limitation in this mode (e.g., as a result of a contingent mode shift).

In view of the above, it can be concluded that MPCs are useful visual indicators and analysis tools in revealing performance criteria relative to low and very low SCRs for preliminary planning.

## 3.3 Recovery from ac and dc faults

For acceptable performance, it is typically required that the dc system should recover successfully from an ac or dc fault without subsequent commutation failures. The appropriate recovery time for a dc system is generally determined through planning studies. It depends on the dc line parameters and other characteristics of the dc system as well as performance requirements of associated ac systems, when the transient and oscillatory stability criteria of the combined ac/dc system are taken into account.

As a general guide, recovery to 90% of prefault real power transfer level can be accomplished in 100–300 ms if the SCR is greater than 3.0. If the SCR is less than 3.0 after the fault clearing, then the effects of magnetizing in-rush currents will be larger and recovery will generally be initially to a somewhat lower power level, typically 80% in 100–300 ms, followed by a slower rise towards 100%. A slower recovery, particularly if the ac network has sufficient inertia to maintain adequate stability margins, is not usually significantly detrimental to overall network performance. Too rapid a recovery can sometimes lead to the dc system drawing excessive reactive power from the ac network, thereby hindering post-fault ac voltage recovery. It should be recognized that often the reactive (Mvar) requirements of the dc station are substantially supplied by shunt capacitors and the ac filters. The Mvar supplied by this equipment is proportional to the square of the ac bus voltage. This means, for example, that at 0.7 pu ac voltage that is only 49% of the nominal Mvar available at 1.0 pu voltage will be produced by the converter shunt capacitors and ac filters, with any remaining converter Mvar requirements, by necessity, coming from the ac network.

Generally, both the direct current and direct voltage are required to recover within a desired recovery timeframe. While strategies will differ, there is a common goal of ensuring that the rate and time of recovery assist the return to steady-state conditions and minimize system oscillations. In post-fault conditions, recovery to a different SCR may require additional shunt capacitance in order to maintain dc voltage and power. Otherwise, operation may be limited to a lower power.

## 3.4 Reactive compensation

Reactive compensation control is provided at a dc converter station to meet the requirements of ac system voltage, reactive power exchange with the ac system, or both. Specific performance criteria are based on steady-state voltage support, var generation, transient voltage control during recovery from contingencies, and alleviation of temporary overvoltages (TOVs) in general. Reactive compensation elements include harmonic filters, shunt capacitors, and shunt reactors, and, if required, synchronous compensator (SCs) or static var compensator (SVCs). With an appropriate control scheme, a converter may also be considered as a reactive compensation element that can adjust its reactive power absorption level to assist the ac system.

Copyright © 1997 IEEE. All rights reserved.

Copyright The Institute of Electrical and Electronics Engineers, Inc.
Provided by IHS under license with IEEE
No reproduction or networking permitted without license from IHS
Not for Resale

One of the dc control objectives could be to maintain the ac voltage within a desired steady-state range. This can be considered when a low SCR produces a marked ac sensitivity to dc variations. Otherwise, with a lower sensitivity due to a relatively higher SCR, an alternative could be to maintain a set reactive power.

When the converter is fed directly by a generating station, much of the converter reactive requirement is usually supplied and controlled by the generators.

## 3.5 Temporary overvoltages (TOVs)

As discussed in Part I, temporary ac system overvoltages can occur at a terminal of a dc system due to converter blocking, ac fault inception and clearing, dc faults, and other disturbances. These overvoltages can be particularly severe for low and very low SCR applications. Because of the potential for damaging utility and customer equipment, as well as the impact on dc converter station design and cost, it is essential that suitable TOV control measures are included in the design.

At dc converter stations, temporary ac overvoltage peaks can be created by superposition of fundamental-frequency and low-order harmonic voltage components. The fundamental-frequency component overvoltage is due to the mismatch between the converter station reactive power supply and the instantaneous reactive demand of the dc converter and the ac system. Fundamental-frequency voltage variations also may occur as a result of ac generator rotor-angle swings, which may be stimulated by ac faults or dc system power-flow disturbances.

Low-order harmonic voltage components, superimposed on the fundamental frequency voltage, often result in voltage peaks much higher than the fundamental component. The harmonic voltage components are created by interaction between noncharacteristic harmonic currents injected by the converters during disturbances, harmonic currents injected by saturated transformers, and the ac system harmonic impedance.

While it may also be an issue for third harmonic resonance at higher SCRs, the capacitive shunt compensation at the converter ac bus and the relatively high system inductance, for a low or very low SCR application, typically result in a parallel resonance near the second harmonic. Such a resonance can result in harmonic voltage components which are substantial relative to the magnitude of the fundamental during disturbances. The characteristic low-order harmonic resonance and high fundamental-frequency overvoltage levels at low or very low SCR terminals can combine to create potential overvoltages exceeding two per-unit without mitigation.

It is recommended that criteria be established for the performance of overvoltage control for each dc system. They determine the levels imposed on the ac system at load buses, affected substations and on lines. Also, the cost and design of converter station equipment, including valves in particular, are influenced by the overvoltages.

Performance criteria have traditionally been specified in terms of maximum fundamental frequency overvoltage values which can be accepted for given periods. However, from the point of view of insulation stress, or more particularly surge arrester energy, it is necessary to consider the time-varying waveform of TOVs which include the fundamental frequency component. It should also be noted that in low and very low SCR applications, instead of the inaccurate use of traditional techniques involving fundamental-frequency overvoltage calculations, it is preferable to use detailed commutation-by-commutation analytical techniques that faithfully represent low-order harmonic interaction. However, it may be difficult to obtain sufficient data for a detailed model at the project planning stage.

## 3.6 Operation under low ac voltage conditions

Operation under low voltage conditions assumes more significance due to the increasing sensitivity between reactive power and voltage as the SCR becomes lower. In order to maintain operating capability, as may be


Copyright © 1997 IEEE. All rights reserved.
Copyright The Institute of Electrical and Electronics Engineers, Inc.
Provided by IHS under license with IEEE
No reproduction or networking permitted without license from IHS
Not for Resale

determined from transient stability studies, it may be necessary to reduce dc power and reactive power absorption. Such a mitigating measure may also be appropriate to offset adverse reactive power interaction during severe ac system contingency conditions, should the SCR become very low.

Available dc technology permits valve firing for a phase-to-phase voltage at the converter ac bus down to 0.3 pu and possibly lower. An example, from a scheme in operation, is indicative of the criteria for defining low-voltage performance. The equipment at the Miles City and Virginia Smith DC Converter Stations can meet the following requirements for safe thyristor turn-on and can be considered as being representative:

a) Voltage reduction down to 0% of nominal for single phase-to-ground faults for a duration of at least 0.5 s.
b) Voltage reduction down to 30% of nominal for three phase-to-ground faults for a duration of at least 0.25 s.
c) During ac faults where the measured value of the average 3-phase voltage is greater than 0.40 pu at the ac converter bus, the dc converter is not allowed to block and must be able to continue to operate at a dc current up to a maximum value consistent with the thermal limitations of the thyristor valves. If the measured value of the average rectified 3-phase ac bus voltage is less than 0.40 pu and greater than or equal to 0.30 pu for a period not exceeding 0.25 s, the dc converter shall not block and shall be able to continue to operate at a current that may be reduced.

A control function that reduces the dc power in response to specific system events is termed *power runback control*. Such a strategy has been incorporated in several dc schemes. In a back-to-back installation it is also possible to continuously adjust the converter current order and, consequently, the converter direct current in response to either ac bus voltage variations or the magnitude of an assigned tie-line power flow. Properly implemented, such a control strategy would reduce the dc system power transfer to a value compatible with the ac system capability during low voltage conditions and would prevent cascade tripping of major transmission facilities. The strategy would resume the ordered dc power transfer as the ac system voltage recovers. A similar strategy in a point-to-point dc transmission scheme may or may not be feasible, depending on the required speed of response relative to communication time delays.

## 3.7 Power transfer during ac and dc faults

During balanced three-phase faults, the dc system direct voltage is limited by the prevailing ac bus voltage. The dc system power transfer capability would similarly be limited. During single-phase faults, however, the imbalanced ac system voltage produces significant noncharacteristic ac third harmonic currents and corresponding second harmonic dc voltages. The power transfer fluctuates, as a result, and may be discontinuous. The average power transfer during a rectifier single-phase fault can be about one third of the prefault power transfer. For an inverter single-phase fault, some power transfer may be possible but is influenced by possible commutation failures and the precise recovery performance. For both the rectifier and the inverter, such contingency power flow could be considered significant and important for overall system security.

In a monopolar dc system, a dc fault causes interruption of the entire dc system power transfer. In a bipolar dc system, no power transfer may be expected during a bipolar fault. However, during a monopolar fault in a bipolar dc system, pole power compensation action may be utilized if the dc system has a suitable temporary overload capability. Such a control action would temporarily increase the power transfer on the healthy pole to moderate the impact of the pole fault on the ac systems at both the sending and receiving ends. The power transfer on the compensating pole would be reduced in harmony with recovery of the faulted pole to minimize the disturbance to the ac systems.

The criteria regarding power transfer during fault conditions are determined by the performance of the overall system in maintaining satisfactory frequency and voltage levels during and following contingencies. The previous considerations may require controlled changes to dc power during the fault and enhanced recovery strategies.

Copyright © 1997 IEEE. All rights reserved.

Copyright The Institute of Electrical and Electronics Engineers, Inc.
Provided by IHS under license with IEEE
No reproduction or networking permitted without license from IHS
Not for Resale

## 3.8 Operation with and without ground return

Typically, bipolar dc systems have been designed with the capability to transfer power over one pole when the other pole is out of service. The return circuit for such monopolar operation has been the ground for a short period immediately after the loss of a pole, followed by the unused pole conductor for long-term monopolar operation when continuous operation with ground return is not allowed.

Generally, for dc operation with ground return, it is required to have appropriately designed ground electrodes at both rectifier and inverter terminals. In situations where ground return is not allowed, even for a short period, an insulated neutral circuit would be required. Another situation for which an insulated neutral circuit may be an attractive alternative is when the cost of the required ground electrodes is prohibitive compared to the cost of the neutral circuit. In either case, when an insulated neutral circuit is utilized, it is required to ground the neutral point of one of the converter stations, as the dc reference point. Moreover, it may be possible to use the station ground mat for this purpose.

It should be noted that the use of the station ground mat may pose a difficulty involving introduction of direct current into the associated ac system during a dc fault when ground fault current would flow through the station ground mat. Ground fault current would also flow through other paths consisting of the grounded neutrals of the converter transformers, the ac system, and the grounded neutrals of neighboring transformers. Such a current flow through the ac system may potentially result in transformer saturation and other forms of interaction with the ac system. For low SCR applications, such problems may be exacerbated, thereby requiring appropriate design considerations.

## 3.9 DC line re-energization

Upon detection of a dc line fault, the direct current on the faulted pole is rapidly reduced to zero. In effect both the rectifier and the inverter on the faulted pole are shut down. Following a sufficient delay for deionization of the fault arc (usually, within 100–500 ms), the dc system is restarted to the pre-fault power transfer conditions. If the restart attempt fails, additional shutdown and restart sequences with longer delays may be executed automatically. Furthermore, the last restart attempt can be made at a reduced direct voltage level. If the fault is persistent, the pole is permanently blocked.

It should be noted that during the above shutdown and restart sequences, the reactive compensation equipment associated with the faulted pole remains on line in anticipation of a successful recovery from the dc fault. A low or very low SCR creates, therefore, the potential for significant overvoltage conditions at the terminal ac buses during such shutdown periods. Consequently, coordination of the converter overvoltage requirements with the number of allowable shutdown and restart sequences is often necessary.

The characteristics of the restart attempts (number, voltage and timing) are usually determined by the dc line insulation and the stability requirements of the ac/dc system. In the determination of the restart criteria to be used, consideration should be given also to the possibility of mechanical shaft overstress in any synchronous machines adjacent to the converter station.

## 3.10 Overload considerations

The continuous overload capability of dc systems is primarily influenced by ambient temperature and cooling system capability. Generally, a system designed to carry the rated power when the ambient temperature is high, for example 40 °C, can carry significantly more power when the ambient temperature is lower, provided adequate reactive compensation is available. It should also be noted that, for low or very low SCR ac system connections, the added reactive compensation may result in a potentially higher TOV duty at the converter terminal, thereby becoming a factor in the equipment design.


Copyright © 1997 IEEE. All rights reserved.
Copyright The Institute of Electrical and Electronics Engineers, Inc.
Provided by IHS under license with IEEE
No reproduction or networking permitted without license from IHS
Not for Resale

It is often advantageous for a dc system to be capable of sustaining a short-time overload for pole power compensation and for power modulation purposes. During pole power compensation actions, the reactive compensation at both ends of the faulted pole generally provides sufficient voltage support for the ac systems to permit the overload capability of the healthy pole to be utilized.

On the other hand, for power modulation purposes, the ability of a dc system to utilize its overload capability depends on the ac system strength at both the sending and the receiving end. For low and very low SCR applications, coordination of power modulation control and reactive power control is essential. An example of the limiting situation is when ac system conditions at one end require sudden utilization of the short-term overload capability, while the other end has a low or very low SCR and cannot accommodate the sudden power transfer increase over the dc system.

The duration and magnitude of the short-time overload for pole power compensation, following a transient dc line fault on one pole, may be also defined by the requirement to control the overspeed of the synchronous machines radially feeding a dc system.

## 3.11 Operation without communication

It has become the generally adopted practice that dc systems are required to perform the basic power transfer function and all the required protection functions without relying on fast communication between the two ends. Furthermore, if a dc system performs a special control function that is essential for the overall security of associated ac systems, the control function must be operational when the communication between the two ends is out of service. Small signal modulation (within the current margin) should also be operational without communication.

To meet performance criteria at a low or very low SCR converter station, it is necessary for any mandatory reactive power control to be independent of communication between the two ends.

## 3.12 Commutation failures

With low or very low SCR operation, strategies can be considered to offset the potential for an increased rate of occurrence of commutation failures.

Generally, it is a requirement that the converter does not experience commutation failures for frequently occurring changes in its associated ac system. These include switching of reactive compensation elements as well as faults and line switching in nearby distribution networks. For infrequent switching events, like energizing the converter transformer or a nearby high-voltage autotransformer, a low probability (less than 10%) occurrence of commutation failures may be considered acceptable. The use of pre-insertion resistors or synchronized switching may be beneficial in avoiding commutation failures.

Should a commutation failure occur, it is necessary to take appropriate control actions to ensure successful recovery of the dc system and power transfer resumption, without subsequent commutation failures. Some events can be predicted and action taken simultaneously.

## 3.13 Voltage changes during reactive switching

The increased voltage sensitivity to changes in reactive power, as the SCR becomes lower, creates a potential for voltage changes at loads in the vicinity of the converting station when reactive banks are switched. Consequently, the required limit on voltage change to reactive switching may establish the incremental switching size of reactive banks, i.e., filters, capacitors, and reactors. Parameters, besides the bank size, that influence the voltage change on reactive switching are as follows:

— The ac system impedance as characterized by the SCR.
— The amount of shunt compensation already connected to the bus.

Copyright © 1997 IEEE. All rights reserved.

Copyright The Institute of Electrical and Electronics Engineers, Inc.
Provided by IHS under license with IEEE
No reproduction or networking permitted without license from IHS
Not for Resale

— The pre-switching ac bus voltage.
— The amount of power being transferred by the dc converter.
— The reaction of the dc system following the switching event, including the effect of control action.

The above key parameters can be considered in establishing appropriate voltage change criteria for a dc terminal and in determining the appropriate sizes of capacitor, filter, and reactor banks for the purpose of limiting flicker. Furthermore, the criterion for limiting the voltage change on reactive switching may also be based on the following considerations:

— The degree of customer dissatisfaction resulting from the voltage change.
— The relative frequency of switching events that cause the voltage change.
— The relation between voltage changes at the converter commutation bus and the corresponding voltage changes at distribution buses.

A higher voltage change may be permissible during less frequent operation at low power levels.

## 3.14 Availability (adequacy and security)

When the SCR is low or very low at the point of connection, the dc power may still be a significant proportion of the total power demand of the ac system. Therefore, the security of the dc system assumes a greater importance, and system studies and design measures are necessary to minimize the impact of contingency conditions in order to ensure the maximum degree of availability and compatibility with the ac system.

## 3.15 Economic and reliability criteria for comparison of different solutions to interaction problems

For the amelioration of any interaction problem, there will be a trade-off between performance benefits (including reliability) and costs. Since interaction in a low or very low SCR situation tends to be more pronounced, the criteria for establishing the trade-offs take on additional significance.

Consequently, compared to what could be considered as overdesign in converter stations at high SCR locations, the solutions to certain interaction problems, e.g., ac filter redundancy, and operation of an inverter at an increased extinction angle ($\gamma$) to reduce the incidence of commutation failures, may be justifiable for a low or very low SCR application.

The criteria for comparison of alternative solutions may include an assessment of the state-of-the-art, i.e., what has been achieved and what is considered as possible, as well as an evaluation of the benefits of modifying a conventional approach and the cost of attaining specific aspects of system performance.

## 3.16 Multiterminal considerations

The first two multiterminal dc systems have evolved from the expansion of two-terminal dc systems; hence, it is reasonable to assume that some of the existing, as well as presently planned, two-terminal dc systems may be expanded into multiterminal configurations. In some cases, the expansion will be anticipated and properly reflected in the original equipment design. In other cases, however, modifications to the two-terminal system will be required to accommodate multiterminal operation. Advanced planning is advantageous in minimizing required modifications and, thereby, in minimizing outage of the original link during the construction phase of the expansion.

In the context of this guide, whether for expansion or for original multiterminal planning, one or more of the inverters could be relatively small in power rating (e.g., less than 25% of the total inverter power rating), coincident with operation at a low or very low SCR. Since the interaction at such a terminal would be accentuated


Copyright © 1997 IEEE. All rights reserved.
Copyright The Institute of Electrical and Electronics Engineers, Inc.
Provided by IHS under license with IEEE
No reproduction or networking permitted without license from IHS
Not for Resale

by the diversion of current from other terminals during certain contingencies, it assumes an additional significance to the previously described performance criteria. Strengthening the ac system and designing the inverter to operate at a larger γ are among options in improving performance.

# 4. Planning considerations

## 4.1 General aspects

In evaluating the ac/dc interaction in planning, a low or very low SCR system cannot be characterized only as a "high impedance" system, but must be further identified as having adequate or inadequate inertia and high or low damping.

For a high-impedance system (low SCR) with high inertia and high damping (low impedance angle), it is feasible to rely on dc controls to meet performance criteria.

It may be possible to achieve the same performance criteria in systems with high impedance and high inertia but low damping, either entirely by appropriate dc control adjustments or with supplementary overvoltage control devices such as SVC and metal-oxide (MO) surge arresters.

When there is inadequate inertia (see Part I: 2.3), it is necessary to install SCs in order to maintain ac system voltage and frequency following faults which disrupt the dc power. Compared with a typical generator, SCs have low inertia; consequently, a higher frequency mode of oscillation may have to be taken into account.

The impact of a prospective dc facility on the overall network performance should be evaluated prior to project commitment and contract award. Although it is impractical to run detailed studies for development of the actual dc controls prior to contract award, it is valuable to identify the general overall functional requirements. A number of areas should be studied for all stations, regardless of SCR:

a) Power transmitted during transient undervoltage and, for a low or inadequate inertia system, underfrequency conditions.
b) Post-fault power recovery rate and quality of power recovery.
c) Percentage of power delivery relative to size of the receiving load, particularly for the post-fault line outage condition.
d) Desirability of supplemental dc controls such as fast ramping, small or large signal modulation, and controls to damp subsynchronous oscillations of generator-turbine shafts.

For installations with low or very low SCR levels (less than 3.0) study of (a), (b), and (c) takes on an increasing importance. Item (a) is primarily a function of the system inertia and voltage conditions; and (d) involves many factors not as directly related to SCR.

As has been pointed out previously, the SCR represents the admittance of the ac system as seen from the converter ac bus, and therefore, in high impedance applications, it is one of the factors influencing voltage regulation. It will greatly influence the size of TOV, the power recovery time of the dc station after ac or dc faults, the quality of this recovery, and the stability of the dc controls. However, these influences must be thoroughly understood for each project because the SCR is only an approximate indicator in the assessment of prospective ac/dc interaction.

In the planning studies for a low SCR dc installation (see 6.3.4 and Table 6-1), it is particularly important to have a detailed knowledge of the ac network and any existing dc systems within it or terminating in it. Based on the assumption that the dc response is fast in comparison with the dynamics of ac networks, power flow and transient stability programs are usually sufficient for the evaluation of the basic performance of the dc system to meet the overall ac/dc system requirements. Following that, unless the planning is confined to

--`,,`-`-`,,`,,`,`,,`---
Copyright © 1997 IEEE. All rights reserved.

Copyright The Institute of Electrical and Electronics Engineers, Inc.
Provided by IHS under license with IEEE
No reproduction or networking permitted without license from IHS
Not for Resale

achieving a functional description, further studies may be undertaken of a more detailed nature to arrive at a specification. The derivation of the specification of the various dc facilities, including the dc controls and the arresters in the dc substation, may involve real-time or computer simulation, in which the dc system and the three-phase ac network can be represented in sufficient detail. Circumstances may also justify the use of other specialized computer programs, e.g., eigenvalue analysis, harmonic propagation, and long-term dynamic simulation.

The following time scales of ac/dc interaction are relevant to planning studies:

a) Hundreds of milliseconds (TOV, voltage stability)
b) Seconds (electromechanical oscillations)
c) Steady-state (long-term voltage stability, subsynchronous interaction)

The magnitude of TOV and the speed of recovery of power transfer are of particular importance in low and very low SCR situations. They warrant careful investigation in the planning stage. Both aspects are affected by the damping (characterized by the phase angle of the ac impedance viewed from the converter ac bus; see 4.4.1) and the ac system inertia (see 4.3.2). A high-impedance angle is associated with low damping but is not always quoted with the SCR. Consequently, two systems with the same SCR but different impedance angles will require different solutions to meet the same overvoltage criteria.

Another important issue in the assessment of TOV is resonance at low-order harmonic frequencies.

Fundamental to all the above issues is the ability for the dc system to meet the scheduled power demands and any required deviations in power from the nominal operating level. Criteria for assessing the impact of low and very low SCRs on power transfer limits were explained in 3.2. In 4.2, the corresponding planning implications are further discussed.

## 4.2 Power transfer limits

### 4.2.1 Determination of CESCR and MAP

The critical effective SCR (CESCR) at the inverter station (see 3.2.2) can be calculated from Equations (8) or (9) of Part I, 2.5. Alternatively, an approximation, which is considered adequate for initial planning, is to use Equation (3) from Part I, 2.2.1.4 [repeated in Part 2 as Equation (1)] together with Figure 4-1. As before, the ac converter bus voltage is assumed to be 1.0 pu.

$$QESCR = (S - Q_c)/(P_d + Q_d) \quad (1)$$

where

$S$ is ac short-circuit level
$Q_c$ is reactive shunt compensation
$P_d$ is converter dc power
$Q_d$ is converter reactive power consumption

As for ESCR, the term QESCR can be considered as having an equivalent critical value (CQESCR). One advantage of using CQESCR is that it is quite insensitive to changes in extinction angle (see Part I, Figure 2-11). It serves as an intermediate step in deriving the approximation for CESCR. Figure 4-1 provides a pre-calculated chart of CQESCR and $Q_d$ as functions of the commutation reactance on ac bases. From the initial dc study data, the CQESCR and $Q_d$ are estimated from Figure 4-1 and entered into Equation (1) to calculate ($S$-$Q_c$). When divided by $P_d$, it provides CESCR.


Copyright © 1997 IEEE. All rights reserved.
Copyright The Institute of Electrical and Electronics Engineers, Inc.
Provided by IHS under license with IEEE
No reproduction or networking permitted without license from IHS
Not for Resale

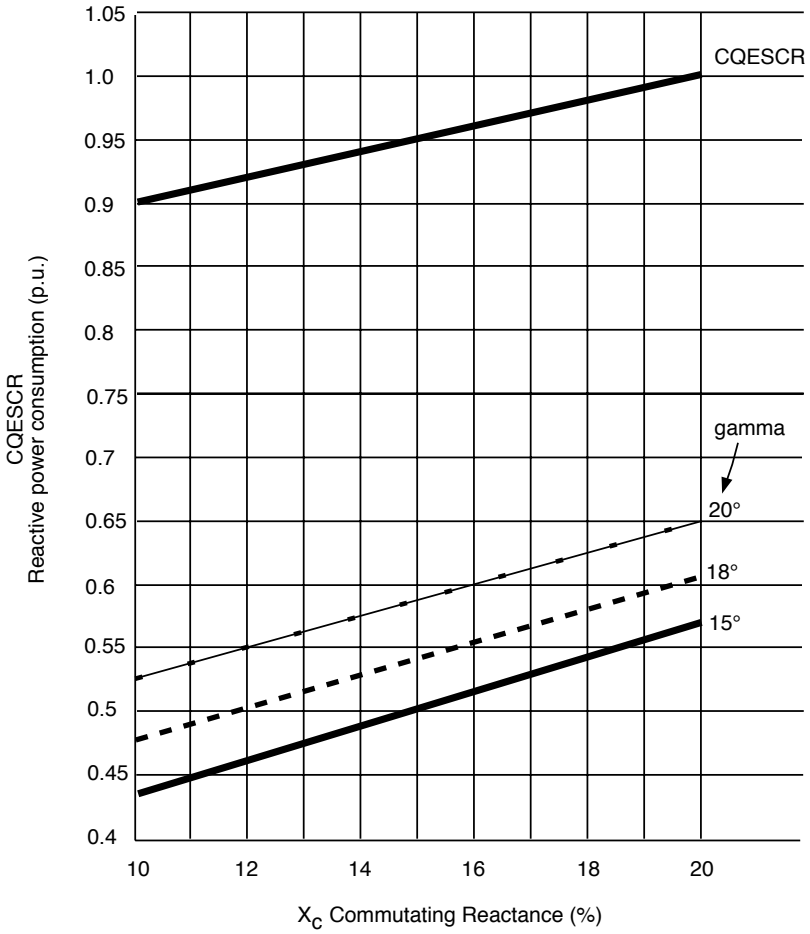


**Figure 4-1—CQESCR & $Q_d$ as a function of $X_c$**

If the reactive compensation is known, *S* and hence CSCR can be obtained, as illustrated in the following two examples:

— For converter data of $X_c$ = 15% and γ = 18°, Figure 4-1 provides CQESCR = 0.95 and $Q_d$ = 0.54 which, when entered into Equation (1) and assuming full reactive compensation ($Q_c/Q_d$ = 1), and $P_d$ = 1.0 pu by definition, give the criteria values of interest: CESCR = 1.46 and CSCR = 2.0. The latter equals the more exactly derived value.
— Similarly, for $X_c$ = 20%, γ = 21° and $Q_c/Q_d$ = 1.5, CQESCR = 1.0 and $Q_d$ = 0.65. Hence, CESCR = 1.65 and (since $Q_c$ = 0.98 pu) CSCR = 2.63. The exact value of CSCR is 2.58.

Such derived critical values can now be used for preliminary assessment of the required power transfer capability relative to the predicted SCR.

The MPC may be generated by a load flow program (with the caution that a given program may not necessarily provide suitable manipulation of the desired variables) or possibly a general purpose mathematical analysis program. For evaluation for ac/dc performance under a variety of conditions, it is important to include outage conditions, such as transmission line or compensation equipment outages, in addition to normal operation in deriving MPCs.

The use of a set of power flow solutions is valid from the assumption that the quasi-steady-state MPC does not account for fast dynamics, such as the response of generator AVRs, in the ac system representation. The

Copyright © 1997 IEEE. All rights reserved.

Copyright The Institute of Electrical and Electronics Engineers, Inc.
Provided by IHS under license with IEEE
No reproduction or networking permitted without license from IHS
Not for Resale

generators should be modeled as constant voltage sources behind their transient reactances (see Part I, 2.2.5.2). The essential steps are as follows:

— Run the ac/dc power flow for the normal operating point, i.e., with the selected $P_d$, $I_d$, reactive shunt compensation, and ac converter bus voltage. This solution also determines the generator voltages behind their reactances, and the tap positions on the converter transformers, to be kept constant for the other points on this MPC.
— Without adjusting the shunt compensation device (e.g., maintaining a constant value of shunt capacitance), run the power flow repetitively to calculate $P_d$ over a range of $I_d$ above and below the initial $I_{\mathrm{d}}$ to encompass the MAP point in deriving the MPC.

The resultant normal MPC may be designated MPC-1. For the contingent MPCs, step (2) is repeated, using the correspondingly modified power flow, but with retention of the reactive compensation, tap position and generator voltages from step (1).

An example of a set of derived MPCs is shown in Figure 4-2 (this figure is based on Figure 5 in Gavrilovic et al. [B18][4]) for an inverter system in normal operation (MPC-1) and three different ac line outage conditions (MPC-2, 3, and 4). MPC-1 is a normal high SCR condition with nominal operation well below MAP. With the MPC-2 outage, operation below MAP and with the original power can be attained by an increase of the dc current to $I_{d(2)}$. However, the original power cannot be restored in MPC-3 without additional dynamic voltage support. The maximum power attainable is a MAP of $P_{d(3)}$ when the current is increased to $I_{d(3)}$. Finally, for the severe MPC-4 outage, the original current exceeds the new MAP so that rectifier power control would immediately have to change to current control in order to maintain stability at a reduced dc power. Should the system voltages be unsatisfactory, additional measures would be needed in achieving acceptable performance.

In using MPCs for planning, it should be confirmed that the assumption of certain quantities being kept constant in MPC derivation, for normal and contingent conditions, is valid for the particular study. As seen in Figure 3-1, the converter ac bus voltage decreases as the direct current is increased. Some load flow programs are optimized on the assumption that the per-unit ac voltages do not deviate substantially from unity. Therefore, should the ac voltage be typically 0.7 pu or lower, such load flow programs may not converge to the correct solution. The maximum direct current for which a point on the MPC can be successfully obtained is consequently dependent on the numerical methods incorporated into the load flow program as well as the detail to which the dc converters are modeled. For most practical needs, it suffices to know the MPC for direct currents up to 20% above $I_{\mathrm{MAP}}$. Should it be of interest to calculate the MPC beyond the range of convergent solutions, assistance from load flow and dc modeling experts could be necessary.

### 4.2.2 Implications for planning

Following the derivation of CSCR, the MPCs and the MAP points, the implications for actual ac/dc system design can be assessed.

Depending on the operating point for full-load dc current relative to MAP on the MPC, consideration should be given to any implied limitations on dc operation, and requirements for dc controls and type and level of reactive compensation.

Operation at a current significantly below $I_{\mathrm{MAP}}$, even during contingencies, implies a high SCR, and it is unlikely that the control modes (in particular, the economically advantageous inverter control mode of minimum $\gamma$) would be restricted. Mechanical switching of filters and shunt capacitors would usually be adequate without the need for fast ac voltage control devices.

[4]The numbers in brackets correspond to those of the bibliography in Annex A of Part II.


Copyright © 1997 IEEE. All rights reserved.
Copyright The Institute of Electrical and Electronics Engineers, Inc.
Provided by IHS under license with IEEE
No reproduction or networking permitted without license from IHS
Not for Resale

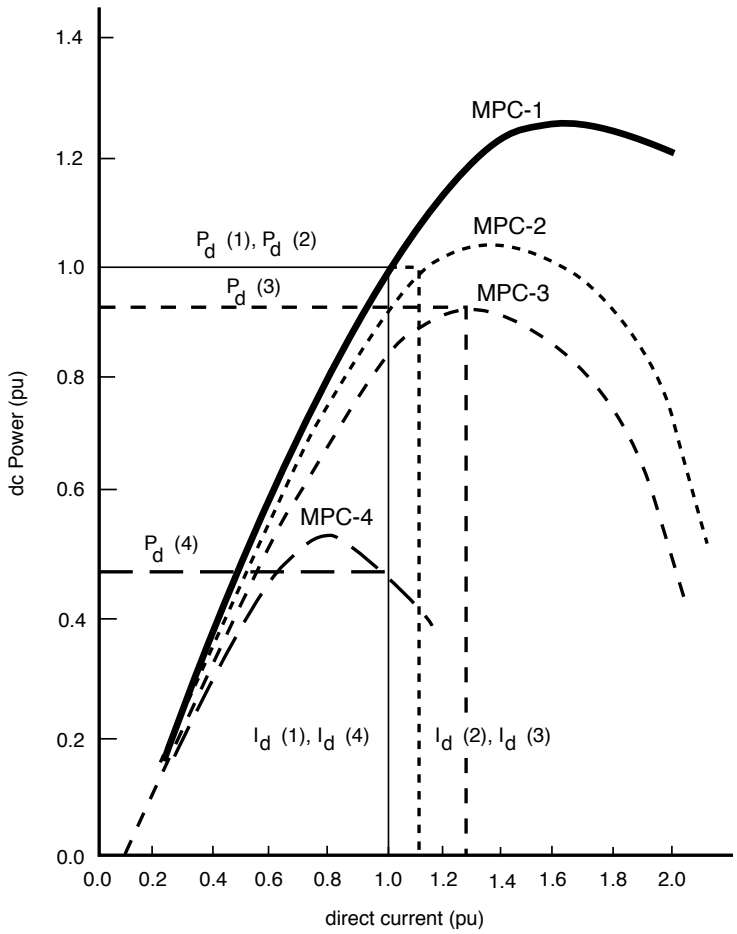


**Figure 4-2—Normal and outage MPCs**

On the same MPC, the excess of MAP above the operating power indicates a reserve of stable power transfer capability without additional ac voltage control. This margin can also be obtained from the type of curves shown in Figure 4-3, where MAP and $I_{MAP}$ are plotted as a function for SCR above the CSCR (2.0 in this case) corresponding to the specified converter data.

As was explained in 3.2.2. for MPC-3 in Figure 4-2, should a contingency shift stable operation in the power mode to a current exceeding $I_{MAP}$, and in the absence of fast ac voltage control, ac voltage collapse can be avoided by a mode switch to current control—triggered, for example, by ac or dc voltage falling below a certain level. Provided that operation at the lower power level with current control is acceptable, it may be adequate to accept the restoration of the ac voltage in due course by AVRs in the ac system for the duration for the contingency.

Alternatively, with the same contingency, power control could be maintained, but at a lower level below the contingent MAP until the system has been restored. Another variation would be to use a power controller with a response sufficiently slow that it would effectively provide current control until ac voltage controllers responded to raise the inverter ac voltage.

For a normal operating current above $I_{MAP}$, due to a very low SCR, stable operation in the power control mode can be achieved by either

a) An increase in SCR,
b) Inverter ac voltage stabilization by fast acting auxiliary equipment, or
c) AC voltage stabilization by converter control in a departure from minimum γ operation.

Copyright © 1997 IEEE. All rights reserved.

Copyright The Institute of Electrical and Electronics Engineers, Inc.
Provided by IHS under license with IEEE
No reproduction or networking permitted without license from IHS
Not for Resale

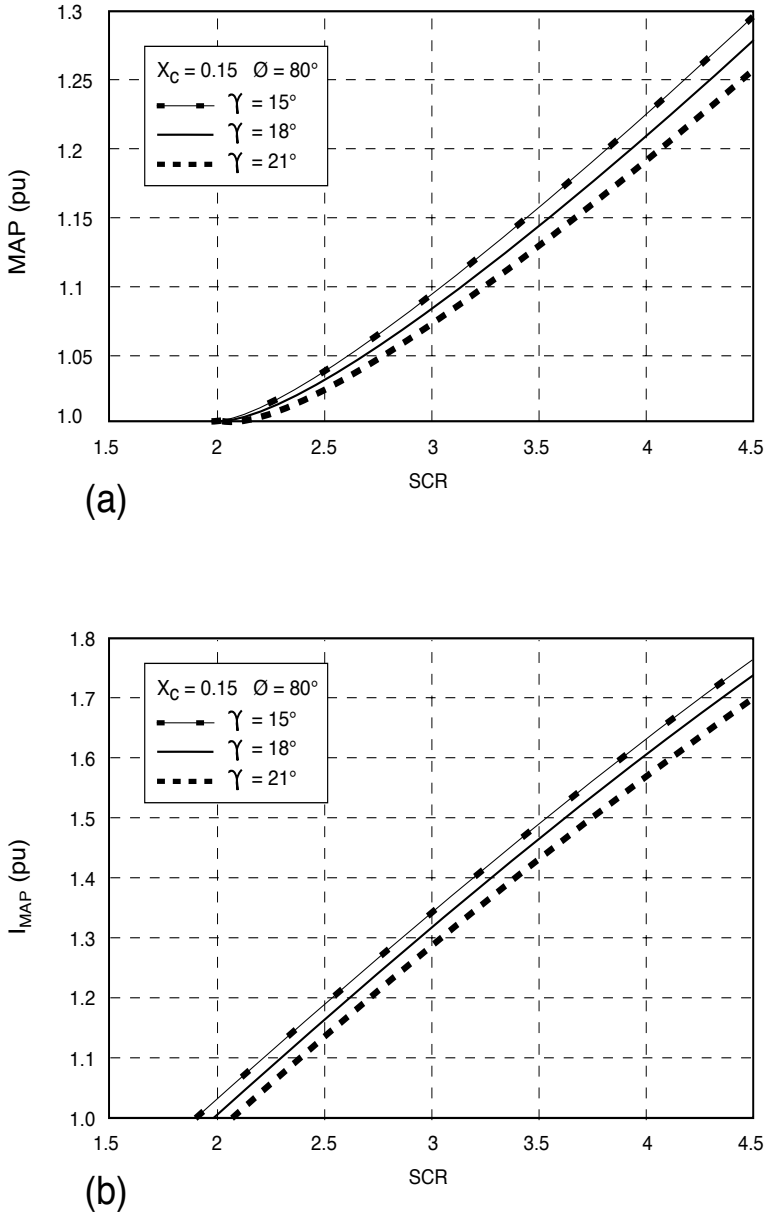


**Figure 4-3—Variation of MAP and $I_{MAP}$ with SCR**

Should normal stable operation just below $I_{MAP}$ frequently undergo excursions above $I_{MAP}$, the same strategies may need to be considered. Their implementation is as follows.

#### 4.2.2.1 Increase in SCR by synchronous compensators (SCs)

As an alternative to the construction of new ac transmission capability (or, of course, limiting the dc power to a lower level), the SCR can be increased by the installation of SC(s). By virtue of their active and controllable voltage capability behind reactance, they are the only compensation device to contribute continuously


Copyright © 1997 IEEE. All rights reserved.
Copyright The Institute of Electrical and Electronics Engineers, Inc.
Provided by IHS under license with IEEE
No reproduction or networking permitted without license from IHS
Not for Resale

to system strength. Thus, their installation leads to a new MPC which displays an increased MAP. The MAP and MPC concepts were factors in specifying new SCs for the Nelson River DC System (see 8.11.1).

Of the alternatives, such a measure is relatively costly. However supplementary benefits are the reduction of commutation failures for remote ac faults, improving the waveform of commutation voltage, and raising the frequency of parallel resonance between the ac system and ac filters—an issue important to distortion and overvoltages (see Part I, Clause 5).

#### 4.2.2.2 Operating point stabilization by an SVC

As a normally less costly alternative to 4.2.2, a TCR or SR component of an SVC has, in principle, the dynamic capability to stabilize power control at a current above $I_{MAP}$. As opposed to the previous assumptions in the derivation of maximum power curves, the SVC effectively modifies the MPC to give a positive $dP_d/dI_d$ slope for variations around the operating point within its dynamic range. Disturbances beyond the SVC range require one of the temporary alleviating strategies such as a reduction in dc current, as discussed previously.

#### 4.2.2.3 Operating point stabilization by converter control

The least costly solution, when planning a new scheme having a very low SCR is to use the capability of the inverter to control reactive power consumption and thereby the ac voltage, by, for example, control regulation to maintain a set ac voltage or regulation of the dc voltage. In order to provide a dynamic range to both increase and decrease reactive power, the steady-state $\gamma$ must be higher than the minimum $\gamma$ that was previously held constant. The range may be limited by valve stresses, need for additional reactive compensation to achieve the required steady-state power factor, and the reduced power utilization of the valves. As for 4.2.2.2, contingent operation beyond the range of the $\gamma$ control requires a remedial strategy.

Figure 4-4 shows the $P_d/I_d$ characteristic when the inverter control maintains constant dc voltage at a nominal $\gamma$ of 24°. It is superimposed on the corresponding MPC for $\gamma = 18°$. The linear and positive slope continues above the previous $I_{MAP}$ until the intercept at $\gamma = 18°$, beyond which operation reverts to the unstable region for power control on the MPC. An equivalent characteristic could be drawn for the SVC in 4.2.2.2.

### 4.3 Electromechanical stability

#### 4.3.1 Power transmitted during faults

In principle, the dc system should transmit as high a power as possible, during an ac fault in the system connected to one dc terminal, in order to

a) Minimize ac voltage deviations at other terminal(s).
b) Minimize frequency deviations due to a surplus or deficit of power in the system(s) connected to the other terminal(s).
c) Reduce the impact of loss of power transfer in the faulted system.

However, the specific circumstances of a project under study may dictate a different strategy. For example, it may be advantageous to deliberately reduce the dc power to a low level, or even zero, until the ac voltage adequately recovers, in order to reduce reactive power consumption, so as not to aggravate the low ac voltage situation.

The ability to control dc power is not independent of the ac disturbance. During the fault and recovery periods, the possible combination of low voltage, waveform distortion, and sudden phase shifts in the commutation voltage, depending on the severity, introduces the risk of inverter commutation failure. Consequently, in planning studies, it is prudent to take into account the possibility that a temporary power control strategy may be interrupted by commutation failure. Also, for a rectifier, a reduced ac voltage may limit the dc power.

Copyright © 1997 IEEE. All rights reserved.

Copyright The Institute of Electrical and Electronics Engineers, Inc.
Provided by IHS under license with IEEE
No reproduction or networking permitted without license from IHS
Not for Resale

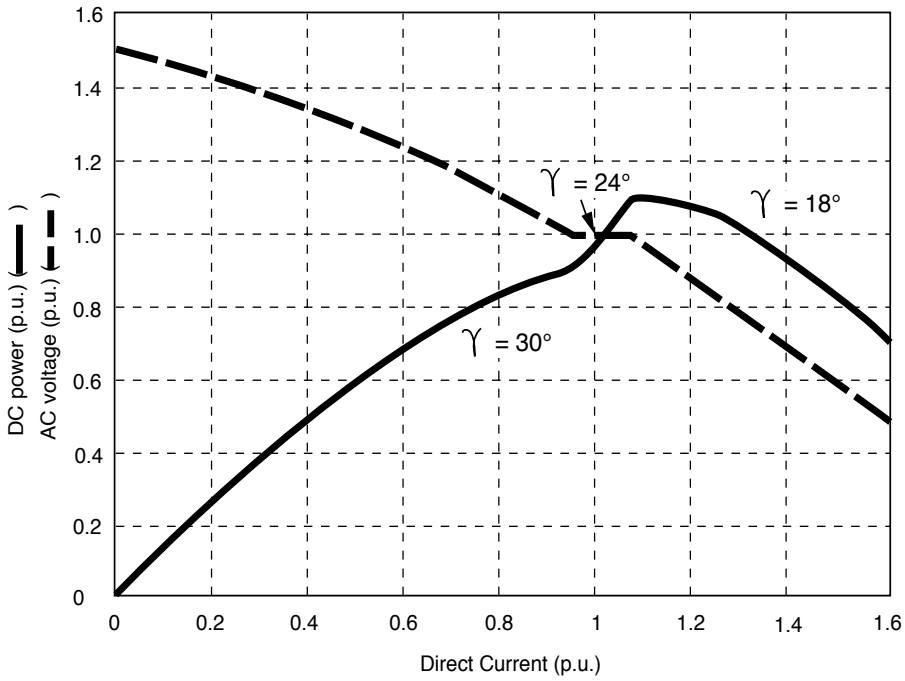


**Figure 4-4—Operation with γ-control**

### 4.3.2 Inertia of the ac systems

As noted in 4.1, the mechanical inertia has a significance in the consideration of the recovery of the dc system from a disturbance. The extent to which it is necessary to take measures to reduce the time to recover is closely related to the transient stability of the ac system. In certain situations, with a low or very low SCR but high inertia, the ac system is able to support a long recovery time (400–600 ms) and still have satisfactory performance in terms of electro-mechanical stability. For example, the Miles City back-to-back dc link (see 8.2) operates with a combination of low SCR and high inertia. It has a recovery time of 500 ms without impairment to transient stability.

The Itaipu system (see 8.12) is another example. In one operating situation in the development phase, the SCR was very low but the inertia was high. A recovery time up to 600 ms, from inverter or ac faults, was found to be acceptable.

When the inertia is inadequate to accommodate the basic dc recovery performance, such as when a dc link feeds most of the power to an isolated island load, SCs may be considered. Controlled reactive devices, such as SVCs to enhance ac voltage control, may be appropriate for low but not inadequate inertia.

### 4.3.3 Rate-of-rise (ramp) and quality of the power recovery

The detailed design of those aspects which influence the transient dc performance, and recovery from disturbances in particular (see Part I, Clause 10), are primarily the responsibility of the system designer. They include consideration of ac and dc resonances, converter transformer saturation, dc line parameters where appropriate, and dc smoothing inductance. Their simulation, whether in real time or by a computer program, requires 3-phase models of the main ac and dc circuit components together with detailed representation of the controls.


Copyright © 1997 IEEE. All rights reserved.
Copyright The Institute of Electrical and Electronics Engineers, Inc.
Provided by IHS under license with IEEE
No reproduction or networking permitted without license from IHS
Not for Resale

In the preparation of a specification, prior to the availability of detailed simulation, transient stability studies can be performed to determine the slowest and, if relevant, the fastest dc recovery characteristics that would be acceptable to the ac system. The dc response of real and reactive power is represented by predetermined functions that describe levels before and during the fault, the post-disturbance levels, and the ramp-rates between levels. Since the purpose is to establish the required dc performance, it is unnecessary to model either the dc components, the feed-back controls, or commutation failure. The worst cases of permanent ac faults and line loss are selected, followed by a ramp restoration of the dc system. The simulation is extended to about 10 s. Repeating the simulation with various ramp rates gives the utility engineer an indication of the minimum required dc performance and any benefits to be gained by further recovery enhancement.

### 4.3.4 DC power relative to ac generating capacity

With reference to Part I, Clause 7, frequency control, transient stability, and voltage stability are important considerations when the receiving system is strongly reliant on the dc power infeed. Evaluation of potential problems in this area can be accomplished through use of conventional power flow and stability programs.

A series of single-outage (N-1) stability cases can be helpful in determining the post disturbance capacity of the ac network to handle the dc power.

## 4.4 Planning considerations of HVDC controls

The dc controls play an important role in alleviating the following (not necessarily in order of importance):

a) TOV following ac fault clearing
b) The time taken for ac recovery
c) The effect of any low-order harmonics, whether arising from the dc or ac system, from interfering with dc or ac operation
d) Negative damping of subsynchronous torsional oscillations in nearby turbine-generators
e) The impact on the ac network of the loss of a dc pole
f) AC voltage excursions due to changes in dc power

On the well-founded assumption that modern dc controls are designed to operate in a stable manner in low and very low SCR situations, certain detailed aspects will be deferred to the design stage, at which time the relevant study parameters will be more clearly defined. In the meantime, planning studies can address all the items with the possible exception of item c) in anticipation of the final design.

### 4.4.1 Temporary overvoltages (TOVs)

Studies of low and very low SCR systems often lead to the conclusion that TOV problems can be redressed by an increase in the short-circuit capacity. However, it may be possible to economically alleviate a TOV problem by appropriate selection and optimization of the dc controls (see Part I: 4.13 and 8.4) except for sustained dc load rejection. The level of TOV is a function of both the magnitude of the ac system impedance and its angle. A lower impedance and higher damping (smaller impedance angle) tend to produce a lower TOV level.

Care should be taken to identify the proximity of customer loads to the converter station. Depending on their location, these loads may be exposed to high ac overvoltages lasting several cycles following converter blocking or partial load rejection. After ac fault clearance, the temporary condition of excess reactive power from any shunt capacitors and ac filters elevates the ac voltage until the recovery of dc operation.

The dc controls can be used to minimize the TOV resulting from ac faults by the following:

a) Rapidly restoring the dc power, commensurate with the capability of the post-fault ac system to receive it.
b) Temporarily boosting the reactive demand of the converters immediately after the fault clearance.

Copyright © 1997 IEEE. All rights reserved.

Copyright The Institute of Electrical and Electronics Engineers, Inc.
Provided by IHS under license with IEEE
No reproduction or networking permitted without license from IHS
Not for Resale

c) Establishing a temporary converter bypass mode during the ac fault. The aim would be to minimize TOV at the remote converter station, where, despite the disruption of dc power, continued operation at nominally zero power factor would maintain var consumption. While this strategy can be considered for general application, back-to-back stations are particularly amenable without the need to communicate between terminals.
d) Initiating the switching of shunt reactors, capacitor banks, and any (nonpermanently connected) TOV limiting devices such as special MO varistors.
e) A response coordinated with other voltage controlling devices such as SVC.

Following a dc line fault on one pole of a bipole, TOV can be controlled by adjustment of the reactive demand through control action on the remaining pole. For planning purposes, a preliminary estimate of the (fundamental component of) TOV factor $k_{TOV}$ for full dc load rejection can be obtained from Equation (2) [see Part I, Equation (27)]:

$$k_{TOV} = V_{LTOV}/V_{LO}$$

$$= \{1 + 2(Z/V_{LO}^2)(P\cos\phi + Q\sin\phi) + (Z^2/V_{LO}^4)(P^2 + Q^2)\}^{1/2} \quad (2)$$

where

$V_{LO}$ is initial per-unit steady-state ac voltage
$V_{LTOV}$ is per-unit fundamental frequency component of the TOV
$Z/\underline{\phi}$ is total effective ac impedance defined by ESCR = $1/(Z/\underline{\phi})$
$P$+j$Q$ is real and reactive power drawn by the converter, where $P$ is positive for a rectifier, negative for an inverter, and $Q$ is always positive.

$P$, $Q$, and $Z$ have per-unit bases of rated ac voltage and dc power.

Equation (2) is exact if the effects caused by transformer magnetizing current are neglected, as may be justified if $V_{LTOV}$ is less than 1.2 pu. The curves in Figure 4-5 (reproduced from Part I, Figure 8-5) show how the fundamental component of TOV varies with SCR and damping angle (ø).

Alternatively, the fundamental frequency TOV levels, without dc restart, can be derived from a transient stability program. The positive sequence network is represented in detail near the dc converters. A series of power flow cases are prepared with the dc station represented either as a $P$+j$Q$ load or, if desired, by a generic model. With $P$ at the rated real power and $Q$ at (for example) 0.5$P$, shunt capacitance is represented at the converter ac terminal sufficient to achieve 1.0 to 1.03 pu ac voltage in the power flow case. The stability case is then run simulating loss of the strongest ac line terminating at the converter due to a close-in three-phase fault.

The dc station is blocked (if modeled) or the dc "load" is tripped following the fault clearing, and the ac voltage is then observed. The simulation need only be run for 50–100 ms (3–6 cycles) after fault clearing. As noted in Part I, Clause 8, this approach will not identify effects of transformer saturation on the TOV level or possible resonances between the converter shunt reactive devices, ac filters and the ac network. At present there are no standards for acceptable TOV. However, planners should be alerted to potential concerns—for example, when the simulation indicates a TOV exceeding 1.15 pu. For very low SCR systems, the TOV level, without any mitigation, can exceed 1.4 pu, as was potentially the case for several recently installed dc projects.

A more detailed knowledge of TOV requires a form of detailed electromagnetic transients program.


Copyright © 1997 IEEE. All rights reserved.
Copyright The Institute of Electrical and Electronics Engineers, Inc.
Provided by IHS under license with IEEE
No reproduction or networking permitted without license from IHS
Not for Resale

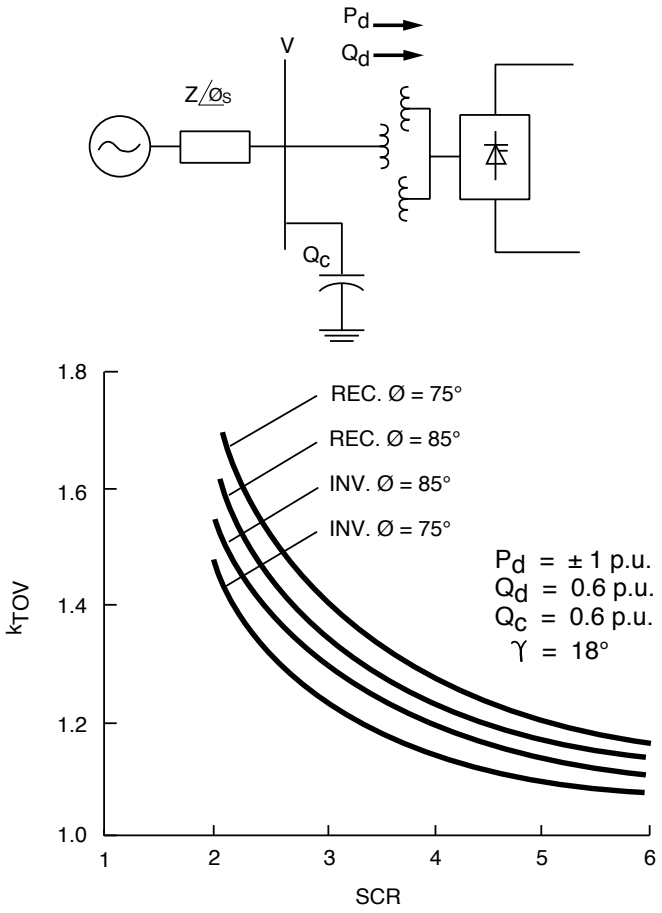


**Figure 4-5—System configuration and results of simplified calculation for overvoltage factor $k_{TOV}$ after blocking (initial positive sequence fundamental frequency ac voltage = 1 pu)**

### 4.4.2 AC recovery

It was noted in 4.3.3 that the maximum permitted dc recovery time from a disturbance, such as an ac fault, can be derived from transient stability studies. Strategies for power restoration are explained in Part I, Clause 10. With refinement as the control design evolves, studies can optimize the restoration performance in order to derive smooth recovery with maximum ac system benefits.

### 4.4.3 Effect of low-order harmonics on ac system operation (see Part I, Clause 5)

In the planning stage it is presumed that either additional filters can be installed at the dc station or the controller can be modified, and that both of these may be necessary to correct for any adverse ac/dc interaction arising from low-order harmonics.

### 4.4.4 DC converter causing negative damping of subsynchronous oscillations (SSOs)

As has been reported in EPRI EL-2708 [B12], 1977 field tests at the Square Butte Project in North Dakota revealed that a converter station can have a destabilizing influence on shaft torsional oscillations. The negative

Copyright © 1997 IEEE. All rights reserved.

Copyright The Institute of Electrical and Electronics Engineers, Inc.
Provided by IHS under license with IEEE
No reproduction or networking permitted without license from IHS
Not for Resale

damping was found to be a result of the constant current controls of the dc station. The destabilizing influence on rotor torsional oscillations can also appear in the constant power regulation mode.

It was found that an additional dc control loop, called a subsynchronous damping controller, can eliminate the adverse interaction. It is also known that

a) Negative interaction is highest with radial connection of the dc station to a machine or group of machines.
b) The interactions do not appear to be a problem above 20 Hz for a long dc line or cable scheme.
c) With proper control of the converter station, there are no adverse effects on the torsional stability of a machine connected to a series-compensated line.

Torsional interaction has been confined to thermal generator units. With regard to hydrogeneration, the large generator inertia compared with turbine inertia, for low- and medium-speed (low head) units, practically eliminates torsional interaction with either series compensated ac lines or dc transmission systems. However, since the respective inertia ratio for high-speed (high head) units may not be large, the potential for torsional interaction is increased.

A quantitative equation has been proposed as a criterion in identifying generating units and system contingencies requiring further detailed studies:

$$UIF_g = (MW_{dc}/MVA_g)(1 - SC_g/SC_{tot})^2 \quad (3)$$

where

$UIF_g$ is unit interaction factor of the $g$th generating unit
$MVA_g$ is rating of the $g$th generating unit
$SC_{tot}$ is short-circuit capability at the converter commutation bus including the $g$th generating unit
$SC_g$ is short-circuit capacity at the converter commutation bus excluding the $g$th generating unit
$MW_{dc}$ is rated dc power

Studies indicate that if the UIF is less than about 0.1, then the unit in question will not have significant interaction with the dc system. Since the magnitude of the interaction between an individual generator and the dc system depends on the value of the ac impedance between them, the interaction is related to the SCR. However, the phase of the interaction (response of the dc system in terms of electrical torque at a particular SSO frequency relative to the torsional oscillation) determines whether the interaction provides positive or negative damping. The phase is largely independent of ac impedance. Thus, if the dc controls are adjusted to provide positive damping relative to one unit, the phase relations will provide positive damping to other units over the same range of SSO frequencies. It follows that if the dc controls are designed for the most pessimistic case of a radial dc system, other configurations and ac network variations will be accommodated.

Naturally, if a proposed dc converter station had the prospect of being closely associated with the termination of series compensated ac lines, it would be prudent to consider operation with the system configuration least likely to produce negative SSO damping, irrespective of the application of supplementary dc damping control.

### 4.4.5 Loss of one pole of a bipole

In addition to providing ac voltage control after the loss of one pole of a bipole, the remaining pole can be controlled to compensate for the reduced dc power by an increase of its power. Care should be taken in the planning stage to specify such a requirement so that the terminal equipment will be appropriately dimensioned to


Copyright © 1997 IEEE. All rights reserved.
Copyright The Institute of Electrical and Electronics Engineers, Inc.
Provided by IHS under license with IEEE
No reproduction or networking permitted without license from IHS
Not for Resale

accommodate a short-term or extended overload. Modulation of the real or reactive power may also be superimposed to provide damping of transient electromechanical oscillations.

### 4.4.6 Transient ac voltage depression

The voltage-dependent current order limit (VDCOL), which is usually included in the converter controls, reduces the dc current when the dc voltage falls below a pre-set level (typically, 0.7–0.9 pu). It will respond to extended ac voltage depressions at the rectifier or inverter, and, depending on the selected VDCOL time-constants, to transient reductions. As a supplementary override feature, power run-back control (see Part I: 4.7) can be applied to rapidly reduce the dc power, in response to a measured ac indicator such as a low ac voltage level. Since the dc response can be predetermined, it is feasible to incorporate this feature, and the assessment of benefits, into planning studies, in anticipation of the control design. For example, the reduction of real and reactive power may assist in voltage restoration. Also, it can be coordinated with other reactive power control such as switching of shunt capacitors or reactors, with precautions for discharge of trapped charge before disconnected capacitors are re-inserted.

### 4.4.7 Low-order harmonic resonances and transfers (see Part I: 5.3.2)

Based on success in several applications, it can often be presumed, in the planning stage, that problems of harmonic resonances can be resolved by supplementary dc controls. However, if different possible system configurations can introduce correspondingly different low-order harmonic resonances, then it may be appropriate to make the control solution adaptive (Reeve and Sultan 1993 [B57]) or to install additional filters. Alternatively, it may be possible to re-tune conventional filters to accommodate low-order harmonics upon the detection of harmonic overvoltages. While the required information for detailed studies may be unavailable until the control design has progressed, the specification and design are assisted by the identification of the system parameters (including harmonic impedances) and operating conditions, both normal and outage situations, that have a bearing on the prospect of harmonic resonances and ac/dc interaction.

## 4.5 Planning of ac/dc performance enhancement

Performance enhancement can be summarized in two general categories. Category 1 includes those aspects requiring measures to minimize negative interaction between the dc system and the ac network. Category 2 contains the enhancements that can be considered supplemental in that they improve the performance of the ac network but are not necessarily required for acceptable performance of the ac/dc interconnection.

— Category 1: commutation failure and recovery; subsynchronous interaction; temporary and transient overvoltage; power/voltage instability; control of voltage changes; harmonic interaction
— Category 2: dc power modulation; power ramping; continuous ac voltage regulation; short-term overload

Category 1 aspects can usually be taken care of by supplemental dc controls and, while critical to maintaining proper ac/dc interaction, they should not be overriding in the evaluation of various transmission options. For low and very low ESCR configurations, the Category 1 concerns should be identified as early as possible, with any additional costs for controls or filters attached to the project capital cost estimates.

It is important to study possible resonance conditions for low-order harmonics on both the dc and ac sides of the dc converter station, and harmonic transfer between them, during normal and outage conditions. The evaluation of resonance is not independent of the means for reactive compensation. A SC effectively reduce the ac system impedance viewed from the converter ac bus and increases the natural resonant frequency. Shunt capacitors in an SVC increase the system impedance. In certain cases, it may be necessary to add low-order harmonic filters. By providing resource data for the design of the dc control at the outset, any additional control needs can be accommodated at relatively low cost and in anticipation of commissioning in the

Copyright © 1997 IEEE. All rights reserved.

Copyright The Institute of Electrical and Electronics Engineers, Inc.
Provided by IHS under license with IEEE
No reproduction or networking permitted without license from IHS
Not for Resale

field. Should there be a possibility of coupling between adjacent ac and dc lines (see Part I, 5.3.3 and 5.3.5), early consideration is recommended owing to the potential cost implications.

The items in Category 2 can be of more importance than Category 1 in assessing and comparing the planning alternatives. The performance enhancement relies on the inherent speed of control of the dc system relative to the ac networks. In this context, performance refers to voltage stability and regulation, and electromechanical stability of the area generation plants at fundamental frequency. The evaluation of benefits should take into account dc contingencies including commutation failures. For example, should an ac fault produce a commutation failure and, thereby, a transient dc power interruption, performance enhancement can commence upon dc recovery.

The improvement in ac network performance, such as in transient stability, may be substantial, although it may be difficult to express it in monetary terms.

### 4.6 Consideration of existing dc schemes in the same system (Reeve and Lane-Smith [B56])

Further to the previous considerations that apply to all projects where the SCR is low or very low, the presence of existing dc facilities calls for evaluation of the following items:

a) *Interaction between the proposed dc terminal and existing converting stations*. The higher the impedance between the two terminals, the more the individual operation can be independent. Conversely, a combination of a low or very low SCR and low impedance between terminals (for example) will extend the ac/dc interaction (as discussed extensively in this guide) into interaction between dc terminals.
b) *Special dc controls on the existing scheme*. Where supplementary controls are being considered for such features as power modulation, ac voltage control, power run-back and power ramping rates, they should be carefully coordinated in order to avoid mutually undesirable degradation of performance.
c) *AC filters and resonances*. Again, close coordination is required.
d) *Load rejection and common-mode ac disturbances*. It is necessary to give particular attention to ac disturbances, which may result in universal dc load rejection, and to coordinate the recovery.

## 5. System economics and reliability

### 5.1 General considerations

The costs of a dc transmission system usually increase if it feeds into or out of a low or very low SCR ac system. Extra costs accrue because of increased rating in equipment for voltage control and reactive power compensation. During the planning process, studies should lead to identification of major equipment ratings and the requirement for spares, based on transmission performance expectations for costing purposes. A reliability and economic assessment should include ac components in order to derive transmission at least cost and with acceptable reliability.

A proper economic assessment of a transmission system should consider such factors as the following:

a) Right-of-way acquisition and preparation
b) Site preparation costs
c) Capital costs of various components
d) Construction schedule and staging
e) Installation costs


Copyright © 1997 IEEE. All rights reserved.
Copyright The Institute of Electrical and Electronics Engineers, Inc.
Provided by IHS under license with IEEE
No reproduction or networking permitted without license from IHS
Not for Resale

f) Interest during construction
g) Cost of losses
h) Operating and maintenance costs

Reliability considerations can help establish the rating and configuration of the transmission system. Also, in indicating requirements for spare converter transformers, valve groups, and reactive compensation devices, there is a cost implication.

## 5.2 Aspects of alternative solutions to solve ac/dc interaction problems

Recognizing that a prospective dc system cannot be considered in isolation from the overall power system, the following is a closer look at economic and reliability aspects of both the equipment and the procedure to control ac/dc interaction.

### 5.2.1 AC voltage and reactive power control

Fundamental frequency voltage control and reactive power control at or near the ac/dc interface are concerns for ac systems with low or very low SCRs. Options in reactive power control for the ac/dc interface include the following:

a) Switched capacitors, reactors and filters
b) Reactive power or voltage control built into the dc controls
c) SCs
d) Thyristor-controlled reactor (TCR) and switched/fixed capacitors
e) Saturated reactor and switched/fixed capacitors
f) A combination of TCR and thyristor-switched capacitors (TSCs)

Station costs are significantly affected by the adopted ac voltage control strategy. Extensive system studies of each voltage control option will identify steady-state and short-time component ratings from which budget prices can be obtained from suppliers. Prime consideration must be given to ensuring that loads in the vicinity of the converter station are not subjected to damaging overvoltages. Overvoltage criteria selected for protection of local load and the existing ac equipment will be a key factor in selecting ac voltage and reactive power control. Effective planning studies will identify steady-state and short-time equipment overload ratings as well as the requirement for spare converters, voltage control, and compensation devices. Due to the uniqueness of each scheme under consideration, it is not possible to generalize comparative costs with any degree of confidence.

Compensation equipment with moving parts, such as a SC, is more prone to forced outages, and it is conceivable that spare units will need to be installed to maintain acceptable reliability. This can substantially increase costs. Costs also increase if the unit size of a SC is reduced, resulting in a larger number of units. The increased cost of smaller units can be offset by the overall Mvar rating requirement when spare capacity is taken into account. As part of the economic evaluation, the cost of losses should be taken into account for all compensation options.

A compensator with no moving parts—an SVC—has the potential for high reliability, if its controls, range, and protection are adequately defined and coordinated with ac system conditions.

One economic evaluation study (Nyati et al. 1988 [B44]) indicated that the capitalized costs of compensation devices over their depreciated lifetime in terms of a percentage of the station capital cost were as follows:

— Switched capacitors and filters (depending on the number of switches): 8–15%
— Synchronous compensation (depending on the number of spare units): 32–55%
— Static var systems: 21–33%

Copyright © 1997 IEEE. All rights reserved.

Copyright The Institute of Electrical and Electronics Engineers, Inc.
Provided by IHS under license with IEEE
No reproduction or networking permitted without license from IHS
Not for Resale

These are typical values based on North American conditions in 1985. It will be realized that the numbers will vary to reflect changes in equipment costs and capitalized losses.

MO varistors are typically less costly than static var systems or SCs for limiting TOVs but lack continuous voltage control.

Load flows and stability studies used deterministically will generate good understanding of how the ac/dc system should perform. With predetermined criteria, such as acceptable TOV and established system design contingencies, these compensation devices can be evaluated for acceptable system performance.

### 5.2.2 Probabilistic reliability analysis of compensation

A truly deterministic or probabilistic study of the reliability of a dc system should include the synchronous, static, or switched ac compensation equipment, which may consist of several blocks. To ensure that the loss, due to a forced outage, of one or more compensating elements does not inhibit the power transfer capability of that dc terminal, provisions for spare compensating capacity must be made in the system design. The extent of the analysis necessary to determine spare compensating capacity may range from simple rules of thumb, such as providing one spare compensating unit equal in capacity to the largest block at the station, to more complex probability analysis. At some dc terminals the number of blocks of compensation may exceed a dozen when filter banks, switched capacitors, and SCs are all part of the reactive power supply.

The application of probabilistic analysis for determining the amount of compensation at a dc converter station should allow for the following:

a) Frequency and duration of a forced outage of each compensating element.
b) The duration of reactive power demanded by both the terminal and ac system.
c) A means of costing the loss of revenue when the dc terminal is unable to deliver power because of a shortage of reactive power.
d) Capital cost of installing and operating compensation.

The probability analysis can allow the planner to reduce the possibility of failure to deliver an acceptable level of power. A more sophisticated approach is to optimize the capital cost of installing and operating spare compensation against the savings in delivering more reliable power as a result of having the extra compensation available.

### 5.2.3 Impact on existing power systems

Power system stability (including steady-state, transient, and voltage stability) can be an economic consideration in developing a new transmission line in an ac power system. One question that must be examined is whether the receiving ac system can accommodate the inflow of power from the dc terminal without degrading ac stability.

Studies should be undertaken to decide whether additional reactive power demanded under these conditions should be located entirely at the dc terminal, adding to the compensation required for the dc link, or dispersed within the ac system, where it may be more effective.

Another option to be considered in a stressed ac system is the addition of transmission circuits rather than support by shunt compensation. Series capacitors on ac transmission lines may also be considered, but care must be taken to avoid ferroresonance with converter transformers if the lines terminate at a converter station.

The rapid change of power, which is possible with a dc link, can be used to advantage in maximizing power system stability. This is a control function of relatively little capital cost that can permit the dc link to have as good or better stabilizing power for the ac system as an equivalently rated ac line. The extent to which dc power can be modulated transiently is a function of the ac system strength at the converter ac bus. Suitable


Copyright © 1997 IEEE. All rights reserved.
Copyright The Institute of Electrical and Electronics Engineers, Inc.
Provided by IHS under license with IEEE
No reproduction or networking permitted without license from IHS
Not for Resale

controllable compensation will increase the voltage support. If additional compensation is required to increase the stabilizing power of the dc link over that required for reactive power control, then this adds to the overall costs of the dc link.

### 5.2.4 Lower-order harmonics

A combination of a low or very low SCR and undamped ac parallel resonant impedances can create harmonic voltage distortion. Without amelioration, the distortion and consequential performance may be unacceptable following a disturbance such as a fault. In general, provided that the distortion can be contained, a dc link can operate with very low SCRs, limited only by the response time of the power controller and by the ability of the ac system and its voltage controllers to receive or deliver the ordered power.

To maintain good ac waveforms, the ac filter design is important. When ac system impedances exhibit parallel resonance at very high ohmic values with little damping and a narrow bandwidth, particularly below the fourth harmonic, there is the potential for inadequate performance of the dc system (see Part I, Clause 5, and Part II, Clause 4). Alleviation through additional expenditure on filtering to provide ac harmonic damping can be considered, further to normal (characteristic harmonic) ac filters.

Judicious control design can also be applied to damp supersynchronous oscillations emanating from narrow-bandwidth impedance resonances. Attention to the design of filters and controls can provide improved dc system performance: recovery from disturbances, reliability, and stability support to the ac system.

## 5.3 Reliability and economic aspects of different dc system configurations

### 5.3.1 General considerations

DC transmission, particularly when it is proposed with new or unique configurations of converters and lines, is a more recent technology with factors of risk that increase as the SCR reduces. In the past, the decision-makers needed assurance from their own expert staff, consultants, and equipment suppliers that the proposed dc system was tenable. Today, new technologies (high-power solid-state devices being a notable example) are being applied to power systems in general. The confidence established through dc transmission is supporting new developments for ac applications.

Economics and reliability play a significant role in the transmission planning process. The economic assessment of transmission systems is generally straightforward.

Reliability assessment of transmission is not as well understood or accepted. However, it can assist in arriving at the optimum ratings of a dc system. Also, for a low or very low SCR application, reliability is a factor in the selection, configuration, ratings and spares, of ac and dc equipment, such as converter transformers and var compensation.

### 5.3.2 Economic assessment with various dc configurations

A dc transmission system, no matter what its configuration, consists of basic components such as valve groups, converter transformers, smoothing reactors, and controls. The assembly of these components into any workable configuration will not change unduly the process of an economic analysis. The more dc converter terminals there are included in a dc system, the higher will be the capital cost compared with an optimized ac alternative.

### 5.3.3 Reliability assessments with various dc configurations

When complex configurations of dc converters and transmission lines are designed into a multiterminal system, a reliability assessment is not straightforward. Even deterministic analysis of the system availability is

Copyright © 1997 IEEE. All rights reserved.

Copyright The Institute of Electrical and Electronics Engineers, Inc.
Provided by IHS under license with IEEE
No reproduction or networking permitted without license from IHS
Not for Resale

limited by access to study tools that can accommodate multiterminal dc transmission. Nevertheless, such tools are available, including computer programs for a probability assessment of multiterminal dc transmission. The main factors affecting the reliability of any workable dc scheme, whether bipolar, back-to-back, or multiterminal are as follows:

a) Quality of system design
   The performance of a dc link is tied closely to the ac system, its relative strength, and the system design involving compensation, controls, and protection. A dc link outage, as a consequence of an ac or a dc fault, will be very much dependent on the quality of system design.
b) Quality of component design
   Frequent component failure as a result of poor design will degrade the overall dc system performance and reliability.
c) Spares for the major power system components
d) Spares and redundancy in the minor power system components such as controls and protection equipment
e) Replacement times for failed components
f) Operating redundancy versus switchable spares

A reliability assessment influences the economic assessment through its contribution to establishing the number of spares and determining the ratings of major system components. Spares for wound equipment, such as converter transformers and smoothing reactors, spare filters, and compensation, can be decided on by judicious analysis of dc link reliability.

As a result of incorporating the dc system into the total reliability assessment, and taking into account the low or very low SCR interface, acceptable reliability can be related to the number of spares. In addition, it reveals the reliability aspects of short-term and long-term overload ratings. By the inclusion of the incremental costs of achieving a rating, the optimum rating of a dc link can be selected.

Should the loss of revenue for forced outages not justify offsetting costs of either spares or an increased rating, a lower reliability may be judged to be acceptable.

## 5.4 Study methods, sources of data, and assumptions

Methods for studying reliability of ac and dc transmission systems have been proposed elsewhere (EPRI EL-4365 [B13]). Computer programs are being used that can assess the reliability of a power system, including generation and ac and dc transmission. Such programs can model large systems adequately and precisely, but the value of output is only as valid as the accuracy of the input data. Operator error and vandalism are significant sources of forced outage that cannot be precisely anticipated in reliability planning studies. It is usual to ensure that forced outage data used as input to any computer program include an estimate of the effect of operator error and vandalism—at least at a level that the utility is prepared to tolerate or expect, or to a level considered acceptable.

### 5.4.1 Study methods

The rule of thumb reliability approach is still in use by experienced engineers who make decisions on transformer spares, filter spares, spare capacity, and spare compensators using such guidelines as being able to withstand the loss of one element when another is out for service.

If dc link component reliability data are available and are trusted, a detailed computer reliability analysis can be undertaken. It is difficult, however, to fully anticipate all the consequential outages that may occur when the SCR is low. Unanticipated contingencies, such as a resonance, may lead to a full or partial dc outage due to the triggering of protection equipment. Their exposure requires precise simulation studies. Following the


Copyright © 1997 IEEE. All rights reserved.
Copyright The Institute of Electrical and Electronics Engineers, Inc.
Provided by IHS under license with IEEE
No reproduction or networking permitted without license from IHS
Not for Resale

consideration of various ac and dc disturbances, any unavoidable outage and derating should be represented in the reliability assessment.

Without supporting digital or physical simulation, computer-based reliability studies can offer a valuable contribution to the design of the dc link in terms of spares and ratings, if done with insight into the analytical process of reliability and an awareness of limitations.

### 5.4.2 Sources of data

There are much more data available on the reliability of ac system components than on dc components (Canadian Electrical Association Report [B16], Lauby et al. [B38]). Very little is published on the reliability of dc systems in a form useful to the transmission planning engineer. One forum, the CIGRÉ protocol for reporting dc transmission outages (CIGRÉ Working Group 14.04 Report [B54] is being revised in a form more suitable for planning purposes.

Reliability data for dc systems should contain forced and scheduled outage data for valve groups, poles, and bipoles at the very minimum. It is useful to have outage data for the components that are of most concern in consideration of spares such as converter transformers and dc reactors. The data should be separated into converter station and dc line data so that evaluation of stations can be separated from effects of line outages if needed. AC component outage data may be gleaned from published statistics of ac equipment reliability. Scheduled outage data is important and the computer program and its data should accommodate such outages accordingly.

Details of methods of reliability study for ac and dc transmission are available in the literature (EPRI EL-4365 [B13], Kuruganty and Woodford 1988 [B37], and Burtnyk [B5].

### 5.4.3 Assumptions

Usually, after all the outage data that is possible to obtain has been collected, some assumptions will need to be made in the interpretation of the data. First of all, a planning study usually includes equipment not yet in service. A basic assumption needs to be made regarding the validity of data based on past experiences being used for some future installation in a new and different configuration. Useful reliability studies can be undertaken using presumptions for outage data of components that are realistic, acceptable, and perhaps even pessimistic. In the most crucial situation, confidence in the plan, or a decision to re-evaluate with additional spares, will critically depend on the analysis of the total system reliability.

Often in reliability studies, losses are neglected. However, the shape of the load duration curve is particularly important. Conditions of load, generation, and transmission may vary so significantly between seasons that separate summer and winter analysis should be undertaken.

Some components, such as generators, may have substantial scheduled maintenance times and forced outages, and this should be reflected in the data. The same applies to any forced derating of components and different summer and winter ratings.

The question arises as to whether generation and ac transmission should be included in a reliability study of dc transmission. When examining the value of spares or increased dc link rating, the reliability of supply to the load will be most important. All sources of supply to the loads, including ac lines and generation, can be represented in reliability studies to obtain a better assessment of the global value of dc link spares and increased dc link rating. For example, there may be little value in maintaining a spare valve group at the dc link rating if there is already adequate strength and reliability in the ac system to feed the load under emergency conditions.

Certainly, should the concept be under consideration of feeding a dc link directly from either an ac generator without ac filters or a high voltage ac bus, then the generation should be included in the reliability study. If

Copyright © 1997 IEEE. All rights reserved.

Copyright The Institute of Electrical and Electronics Engineers, Inc.
Provided by IHS under license with IEEE
No reproduction or networking permitted without license from IHS
Not for Resale

total system reliability of supply to the load is the ultimate concern, then all major ac and dc components should be included in a reliability study of transmission expansion.

Normally, momentary outages are not included in adequacy studies. Only steady-state outages are usually included. Frequency as well as mean duration of outages are important. A dc link may be very reliable in terms of total down time due to forced outages but the frequency may be limiting or of greater concern. There is no simple evaluation of the impact of frequency of outage, but if each occurrence results in load shedding or extensive rescheduling of generation, the resulting inconvenience may be prohibitive. When the outage frequency is a key issue, as it may well be for bipolar outages, the acceptable level can be determined by including reliability studies in the specification, and making them part of the design of both the ac and dc systems.

Transmission reliability studies can provide a valuable tool to assist in decision-making. They join with the loss analysis, power flow study, power system stability study, and electromagnetic transient or simulator study in the planning procedures for studying power system expansion.

# 6. Planning and initial design studies

## 6.1 Introduction

Without comparing the alternatives for interconnecting two or more ac systems, this clause considers the studies to be undertaken once a dc link has been selected. Emphasis is placed on low or very low SCR applications.

The aims of this clause are illustrated in the flow chart in Figure 6-1, which indicates the input data, types of study, and output data for initial studies, prior to detailed specification studies.

First, planning studies provide information on the type of compensation, frequency support, and control strategy to adopt for the project. Then, based on these data, consideration is given to the principal aspects of the initial design studies in order to define both the main circuit and the control requirements. For each type of study, this clause will provide some preliminary considerations, the aspects to be considered, the method and tools to use (including modeling), and the information expected from the study.

## 6.2 Planning studies

### 6.2.1 Preliminary data

During preliminary studies, the determination of the following items provides a basis for estimating the impact on the ac system:

a) The rated power
b) The ac bus voltage at the point of connection
c) The target availability and reliability values

The ac data that are needed for ac/dc system studies are discussed in 6.4.

### 6.2.2 Preliminary considerations

It does not generally require sophisticated tools in order to expose any potential problems needing consideration before the detailed definition of the dc system. Moreover, simple criteria are available for a first evaluation, as explained in Clause 3 and Clause 4.


Copyright © 1997 IEEE. All rights reserved.
Copyright The Institute of Electrical and Electronics Engineers, Inc.
Provided by IHS under license with IEEE
No reproduction or networking permitted without license from IHS
Not for Resale

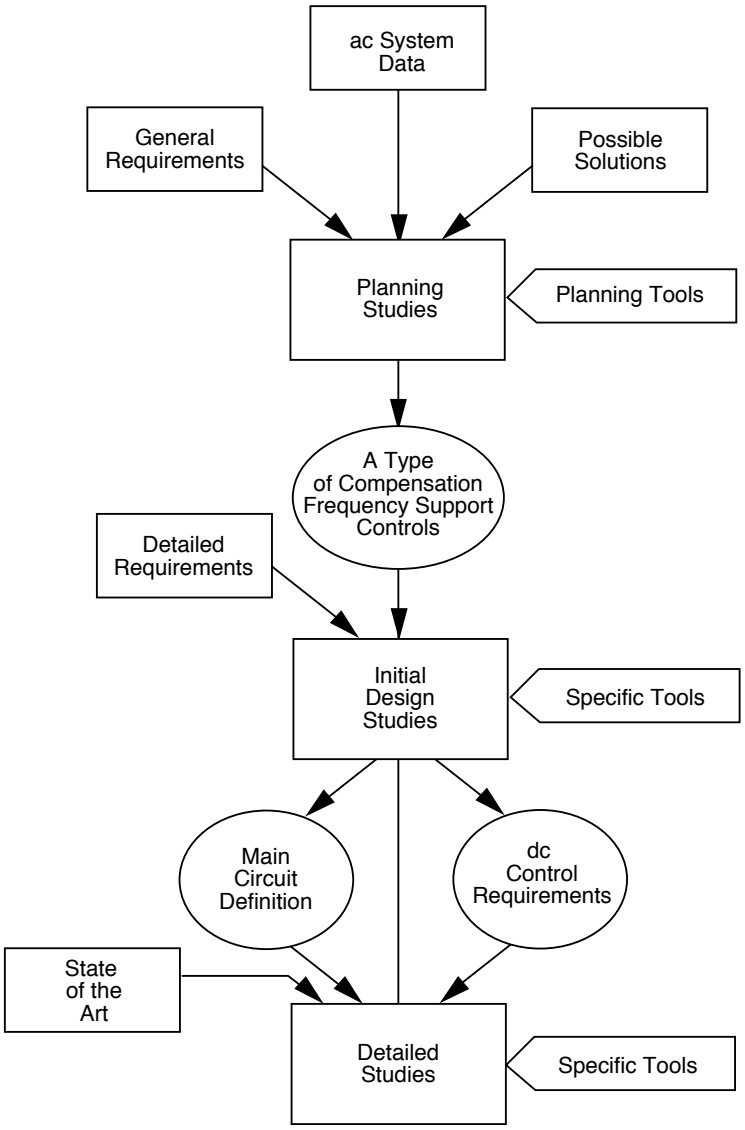


**Figure 6-1—Planning and initial design studies flow chart**

### 6.2.2.1 Short-circuit ratio (SCR) and maximum available power (MAP)

The SCR is a good indicator of the extent of planning studies that may be required to be performed. Together with the consideration of operation relative to MAP (see 3.2 and 4.2), it is a basis for preliminary selection of reactive compensation devices, overvoltage limiters, and the control strategy. As recommended in Part I, 2.2.1.3, the operating effective short-circuit ratio (OESCR) should be considered when the dc link is not operated at full power under extreme ac system contingencies.

### 6.2.2.2 Parallel resonance

Equation (4), which is extracted from Part I, 5.5, provides a preliminary indication of the frequency of the first parallel resonance ($f_{res}$) between shunt capacitance and the ac system:

$$f_{res} = f_1(SCC/Q_c)^{1/2} \quad (4)$$

Copyright © 1997 IEEE. All rights reserved.

Copyright The Institute of Electrical and Electronics Engineers, Inc.
Provided by IHS under license with IEEE
No reproduction or networking permitted without license from IHS
Not for Resale

where

$f_1$ is fundamental frequency
$SCC$ is ac short-circuit MVA
$Q_c$ is Mvar of shunt capacitance (including filters)

Assuming a ratio in the range 0.5–0.6 between the reactive and the active power of the converters, and full compensation of the reactive power by $Q_c$, low-order resonance can be exposed.

Further refinement can be achieved by the use of frequency scan programs, or EMTP-type studies, for different combinations of shunt capacitance, filters, and ac system operating conditions.

#### 6.2.2.3 Effective inertia ($H_{dc}$)

The $H_{dc}$ ratio (defined in Part I: 2.3.2) is an indicator of potential frequency control problems, the requirements for fast or slow power recovery, and strategies for var compensation.

#### 6.2.2.4 Unit interaction factor (UIF)

The values of the UIF in the different configurations of the ac system will anticipate risks of subsynchronous resonance problems (see Part I, Clause 6).

### 6.2.3 Aspects to be considered during planning studies

#### 6.2.3.1 Frequency support

While slower than SVC for voltage control, SCs have the advantage of energy storage and the provision of transient commutating voltages during disturbed conditions, even when the SCR is very low. Moreover, they may be the only means of avoiding frequency collapse in an island ac system in certain circumstances. Various combinations of available designs and their control are available to give different performances in terms of speed of response, overload capabilities, losses, and reliability.

#### 6.2.3.2 Compensation of reactive power

The choice of a compensation and control strategy will be of major importance for all the other aspects to be considered in the planning and initial design studies. The following are possible strategies:

a) *Shunt capacitors*. They may be designed to provide the total, or a part, of the reactive power absorbed by the converters. They can be apportioned to ac filters (as the capacitance at fundamental frequency) and to shunt capacitor in several banks generally switched by circuit breakers. They will be applicable whenever the voltage control at the converter ac bus does not need to be fast.
b) *SVCs*. Equipment like saturated reactors (SRs), TCRs, TSCs, or any combination of them, can be used to provide faster voltage control and improve voltage stability. Switchable reactors may also be required in some cases.
c) *Combinations of SCs and SVCs*. A possible solution to a given compensation problem can be a combination of an SVC, for fast voltage control, and a SC, to increase the ESCR.

#### 6.2.3.3 Converter controls for ac voltage or reactive power control

Converter controls can be an adequate and fast means to maintain the ac bus voltages, or to control the reactive power interchange at the converter bus between required limits, during transients. Back-to-back dc links are more likely to offer this possibility through close coordination between the rectifier and inverter, but the approach has been applied to long-distance schemes.


Copyright © 1997 IEEE. All rights reserved.
Copyright The Institute of Electrical and Electronics Engineers, Inc.
Provided by IHS under license with IEEE
No reproduction or networking permitted without license from IHS
Not for Resale

This may be more economical than the installation of static or rotating equipment at the converter bus, even if the requirements lead to an increase in converter ratings.

#### 6.2.3.4 Temporary overvoltages (TOVs)

When the SCR is low or very low, the need to limit TOVs may significantly influence the station design in terms of ratings, and in terms of both the overload capability and control performance of the converters and the compensation devices (see 6.3.3.2).

#### 6.2.3.5 Overload requirements

Because of the influence on the station design, including converters, transformers, and compensation, the need to accommodate overloads should be considered from the outset.

### 6.2.4 Models and tools for planning studies

The planning tools that are normally used for short-circuit, power flow, and transient stability studies, with models valid for power frequency phenomena, are applicable to ac/dc studies provided that adequate converter models are available. Also, for low or very low SCR operation, there should be an adequate control model, including closed-loop current control, and a model valid for the start up of the dc system after a disturbance. Transfer functions and limits should be included and the dc network should be represented by a dynamic model, where relevant.

Such modeling is consistent with the other dynamic models (static var systems and excitation systems of synchronous machines) required for this kind of study.

### 6.2.5 Information to be provided by planning studies

At the end of the planning studies, and before starting initial design studies, the following data should have been compiled:

a) Size and type of compensation (subject to confirmation by initial design studies)
b) Requirements for limiting TOVs
c) Voltage control requirements
d) Maximum available power
e) DC control requirements
f) Transient overload requirements (long and short terms)
g) Stability margin

This information is generally sufficient to establish a cost estimate, including allowance for any special requirements.

## 6.3 Initial design studies

### 6.3.1 Preliminary considerations

The main purpose of the initial design studies is to produce an exhaustive set of data upon which to base the specification. Of principal concern are the definitions of the main system configuration and the dc controls. The studies include ac and dc filters, insulation coordination, noise propagation, radio frequency interference, and torsional interaction.

As the planning and design progresses, a point is reached when the typical ac planning tools become inadequate. Since the need for more specific tools is emphasized by a low or very low SCR situation, there will be

Copyright © 1997 IEEE. All rights reserved.

Copyright The Institute of Electrical and Electronics Engineers, Inc.
Provided by IHS under license with IEEE
No reproduction or networking permitted without license from IHS
Not for Resale

an earlier awareness of any deficiency. Consequently, while the following issues are described in the context of initial design studies, they may justify earlier consideration for low and very low SCR applications.

### 6.3.2 Aspects to be considered in initial design studies

Once the strategies for compensation, frequency support, and dc controls have been selected, new criteria can be introduced to evaluate with more accuracy the extent of outstanding design problems. These criteria take into account the actual reactive power provided by static or rotating devices, the actual system inertia, and the harmonic impedances.

Specifically, the new criteria are the ESCRs, as a result of the installation of reactive compensation at the converter ac bus; the effective system inertia, resulting from the installation of SCs, if applicable; and the effective ac system harmonic impedance profile, which is the system impedance in combination with the reactive compensation and filter impedances. They will influence directly the choice of a solution satisfying the various aspects of ac/dc interaction. The main aspects to consider are summarized below:

— Voltage and power stability
— TOVs
— Transient overvoltages
— Harmonic disturbances
— Losses
— Recovery from faults
— System protection
— Harmonic stabilities
— Subsynchronous interaction
— Availability and reliability

A more detailed description of the mechanisms of these interactions is given in Part I.

### 6.3.3 Solutions to be investigated during initial design studies

Several methods of accommodating interaction problems have already been adopted in existing dc installations (see Clause 8). In this subclause, alternative solutions to various problems will be suggested without reference to a specific application.

Should there be a termination of another dc system, or another controlled device (e.g., FACTS—flexible ac transmission system), in the vicinity of a proposed converter station, it should be recognized that there is a potential for interaction. It would be prudent to include consideration of such interaction in the following solution categories, and to select the study tools and models accordingly in 6.3.4 and 6.3.5, respectively.

#### 6.3.3.1 Voltage and power stability

a) *Voltage control by shunt capacitors, reactors, and filter banks*. The switching of shunt capacitors, reactors, and filter banks may provide a solution for voltage control at the ac converter bus, when the SCR is high but may be limited for low or very low SCR situations. The incremental size and number of banks will define (a) the amplitude of the voltage change that the ac system will have to withstand during bank switching sequences, and (b) the frequencies of parallel resonance under certain operating conditions, the lowest being typically the most important.
b) *Voltage control by static compensators (saturable or saturated reactor, shunt reactor, TCR, TSR, TSC)*. The transient overload capabilities and the performance of the controls of these devices have a direct effect on the stability of the integrated ac/dc system. They may be appropriate for low SCR applications. For a very low SCR (less than 2.0), when operation may be at a current exceeding that of maximum available power (*to the right of MAP*), the TSC may have an inadequate dynamic


Copyright © 1997 IEEE. All rights reserved.
Copyright The Institute of Electrical and Electronics Engineers, Inc.
Provided by IHS under license with IEEE
No reproduction or networking permitted without license from IHS
Not for Resale

response. Special care should be given to the possibility of interaction problems between the converter controls and the SVC controls.

c) *Voltage control by a SC*. In some cases, stability problems can be solved by the selection of the SC parameters, such as the speed of response of the excitation system and the overload capabilities.

d) *Choice of compensation*. In addition to being a variable source of reactive power, a SC increases the ESCR, reduces the TOV, and increases the natural frequency of the system. An SVC has a faster response, but the reliance on shunt capacitance for var generation reduces the ESCR. The range of both can be extended by additional mechanically switched capacitors.

e) *Converter control*. One approach to resolving interaction and stability problems is to modify the ac system, such as by adding transmission capacity to increase the SCR, insertion of series capacitors and shunt compensation at strategic locations, and the enhancement of generator controls. However, it is technically and economically attractive to consider the exploitation of the converter controls to control ac voltage (as in 6.2.3.3), damp power oscillations and to control frequency. For example, in back-to-back schemes, where active and reactive powers can be controlled rapidly without communications and dc line time constants, this solution will generally be preferred economically, compared with extensive ac system modifications or the installation of static compensators.

#### 6.3.3.2 Temporary overvoltages (TOVs)

As a result of fault clearing, load rejection, or a dc line fault, TOVs will occur at the converter ac bus. Fault clearing may be considered the most onerous due to transformer saturation effects. If it is specified that valve commutation must resume with minimum hesitation when a fault clears, the control, to the extent permitted by a specified dynamic margin, can be called on to control overvoltages. Other solutions can be investigated to reduce TOVs:

— The reactive shunt compensation can be designed with overload capabilities.
— Reactors switched by circuit-breaker or solid-state switches.
— MO voltage limiters set at a low protective level, and with a large energy absorption capability—coordinated with converter control, if required.
— Circuit breakers capable of opening safely under high TOV conditions have also been used to allow fast tripping of the converter and compensation equipment.

#### 6.3.3.3 Transient overvoltages

Measures to limit temporary and transient overvoltages (lightning and switching) by voltage limiting devices, e.g., MO varistors, can be coordinated. Breaker pre-insertion resistors and point-on-wave switching devices are ineffective in limiting magnetizing inrush current transients following fault clearance.

#### 6.3.3.4 Harmonic disturbances

The design of the ac filters will be influenced by other dc terminals in the vicinity. High Q filters may become overloaded when in proximity to a terminal containing low Q filters. Further to the need for effective ac and dc filters, the harmonic performance will be enhanced by the minimization of non-characteristic harmonics. Since harmonic interaction may be emphasized by a low or very low SCR, particular attention should be given to the converter controls, SVC controls, and tolerances in the reactances of the converter transformers.

#### 6.3.3.5 Losses

Losses can be managed by adequate specification of the main equipment, and during the design of the converter transformers, valves, and filters. In filter design, there is a compromise between high damping and low losses.

Copyright © 1997 IEEE. All rights reserved.

Copyright The Institute of Electrical and Electronics Engineers, Inc.
Provided by IHS under license with IEEE
No reproduction or networking permitted without license from IHS
Not for Resale

The control strategy and its consequences on operating angles of converters have a large impact on losses and have to be considered in the selection of the nominal operating angle.

#### 6.3.3.6 Recovery from faults

During design studies, the faults to be considered on the ac system side are single phase, three phase, remote or local short-circuits. On the dc side, pole or cable short-circuits have to be considered.

The response of the integrated ac/dc system to a fault will be inherently limited by the power circuit characteristics, but the quality of this response in terms of reliability will depend directly on the adopted control strategy for both the converters and the compensation, and on the settings of the control parameters.

The valve design can also influence the recovery, if operation for under and overvoltage conditions is made possible.

#### 6.3.3.7 System protection

The introduction of a dc link with its compensation equipment can have adverse effects on ac protection. For example, when the dc link feeds a system with little generating capacity, the fault levels may be insufficient for conventional protection. At the same time, the combination of shunt capacitance at the converter bus and a low or very low SCR can modify the fault current profile and cause protection maloperation due to the waveform distortion mainly associated with low-order harmonics.

The solution is normally a change in system protection settings resulting from detailed studies. The introduction of synchronous compensation for other purposes could provide adequate short-circuit current to the existing protection. However, this would not be an economic solution to the protection problem alone.

#### 6.3.3.8 Harmonic instabilities

This is generally solved by modifications to the controls of the converters or the static compensator, either by introducing supplemental loops or by adjusting the settings of the control parameters. Where more than one low-order harmonic resonance is possible, in some circumstances the temporary retuning of a conventional filter may be a solution. (See also 4.4.7.)

#### 6.3.3.9 Subsynchronous interaction

Any potential for the dc system to produce negative damping of subsynchronous oscillations can be accommodated in the design of the controls for the converters, static compensators, and machines, as appropriate. As a back-up, protective relays, based on monitoring of torsional oscillations, can be considered for the machines.

#### 6.3.3.10 Availability and reliability

When a dc link is designed to feed power to a low or very low SCR location, the target values for reliability and availability may be higher than for power interchange between strong systems. To reach high levels of availability, possible considerations are:

— The main circuit configuration (one or two poles or bipoles)
— The spares strategy
— The use of components with high reliability
— The use of redundancy
— The control design


Copyright © 1997 IEEE. All rights reserved.
Copyright The Institute of Electrical and Electronics Engineers, Inc.
Provided by IHS under license with IEEE
No reproduction or networking permitted without license from IHS
Not for Resale

### 6.3.4 Methods and tools for planning and initial design studies

In order to study the various phenomena over a range of frequency and time-scales, several tools are needed for the initial design studies. Most of them are familiar to ac system analysts. Other tools are specific to dc transmission.

Table 6-1 gives the tools that are appropriate for study and design purposes for each phenomenon.

**Table 6-1—Tools for planning and initial design studies of an integrated ac/dc system**

1. Load flow program
2. Transient stability program
3. AC/DC simulator
4. Electromagnetic transient program
5. Transient network analyzer
6. Harmonic generation and propagation program
7. Frequency response/scan program

| Phenomenon | Tool | | | | | | |
|---|---|---|---|---|---|---|---|
| | 1 | 2 | 3 | 4 | 5 | 6 | 7 |
| Voltage/power stability | XX | XXX | XX | XX | | | |
| TOVs | X | XX | XX | XXX | X | | |
| Recovery from faults | | XX | XXX | XXX | X | | |
| Transient overvoltages | | | XX | XXX | XX | | |
| System protection | | XX | XXX | XXX | X | | |
| Harmonic instabilities | | | XXX | XXX | | | XXX |
| Harmonic disturbances | | | | XX | | XXX | |
| Subsynchronous interactions | | | XX | XX | | | XXX |

NOTE—The number of Xs indicates the efficiency of the tool to study the phenomenon.

### 6.3.5 AC system and converter station representation in initial design studies

A variety of models is required to accommodate the range of electromechanical and electromagnetic studies. For a complex system, it is necessary to determine the limits and accuracy of model needed for each study, and the validity of any simplifying assumptions. The following suggests how, and in what degree of detail, to model the ac/dc system in this stage of a project.

#### 6.3.5.1 Voltage and power stability

This can best be studied digitally. The system representation must be as complete as possible, including all the generators that are connected at the nearest substations. Load impedances can be represented at the fundamental frequency. The dc link and compensation devices can be represented as controlled active and reactive power sources. The control regulators must be represented at least in steady-state. Special attention can be given to the calculation of the commutation margin angle of the inverter, so that the computation can be

Copyright © 1997 IEEE. All rights reserved.

Copyright The Institute of Electrical and Electronics Engineers, Inc.
Provided by IHS under license with IEEE
No reproduction or networking permitted without license from IHS
Not for Resale

terminated when the margin is violated, being indicative of a commutation failure. The modeling can be an adequate approximation in such cases. A more accurate representation of commutation failure requires detailed transient analysis.

#### 6.3.5.2 Temporary overvoltages (TOVs)

The representation of converters as active and reactive loads, based on the steady-state converter equations, is generally sufficient to simulate the steady state or the blocked state of a dc link. The fast response of the control of compensation device controls on overvoltages must be represented. The parameters determining the ac harmonic impedances, particularly at low-order frequencies, should be known in detail. Should it be contemplated to use the converter for voltage control, it will have to be represented in corresponding detail. Similarly, for the application of switched MO voltage limiting devices, the converter controls should also be represented to define the proper switching sequence and MO device ratings. Nearby generator excitation control systems should be modelled as well as load response to voltage.

#### 6.3.5.3 Transient overvoltages

This case is very similar to the previous one as far as modeling is concerned. The generator models should reflect subtransient reactance to the excitation controls vs. transient reactance for TOVs.

#### 6.3.5.4 Harmonic disturbances

The harmonic impedance of loads should be correctly represented as far as practicable. The proportion of passive loads and rotating loads can have a significant effect on the study results.

#### 6.3.5.5 Recovery from faults

For studies of the recovery of converters from faults over a period of typically 300 ms, real time simulators are commonly used. It is usually sufficient to represent machines, including local generators, by fixed Thévenin equivalents.

For the longer time scales of ac system recovery, computer studies are normally used; it is then important that the ac system model can represent electromechanical oscillations, i.e., that the inertias are modeled on the relevant machines. This is particularly important if a SC is connected close to the converter bus. The dc controls and static compensators equipment and controls have to be represented, but not in the detail used in simulator studies. The converters and static compensators can be considered as controlled active and reactive power sources that match the steady-state control characteristics (e.g., ac voltage/ac current or dc voltage/dc current). Time constants in implementing the static characteristics have to be taken into account.

Current developments in real-time and computer simulation indicate that there is no clear dividing line between the applicability of both approaches and to the degree of detail afforded by each.

#### 6.3.5.6 System protection

AC line impedances are normally represented by lumped sections when focusing on protection behavior during faults. The section length will depend on the frequency range of the transient currents and voltages applied to the relays. Sections of 100 km are adequate below the third harmonic, but shorter sections are needed for higher frequencies. Detailed modeling is needed for the converters, static compensators, and the control of both. Certain protection studies may also require a transient stability program complete with a detailed dc model.


Copyright © 1997 IEEE. All rights reserved.
Copyright The Institute of Electrical and Electronics Engineers, Inc.
Provided by IHS under license with IEEE
No reproduction or networking permitted without license from IHS
Not for Resale

#### 6.3.5.7 Resonances, instabilities, and harmonic transfer

It is important to model the complete controls for the converters and SVCs. A model of the ac system impedance at low-order harmonics should be used. Also, if applicable, changes in the characteristics of re-tuned ac filters (see 4.4.7) should be modeled.

#### 6.3.5.8 Subsynchronous interactions

In modeling the dc system, it is necessary to include the closed-loop controls, such as the dc voltage and current regulators and γ control, together with supplementary controls (e.g., power swing damping control) that respond to system dynamic events. Any active compensation devices and their controls should also be modeled.

In modeling the ac system, it is necessary to account for the frequency dependence of impedances by the inclusion of frequency-dependent terms in expressions containing inductance and capacitance. This is not achieved by a transient stability program that represent transmission system impedances as constant ohmic values at the fundamental frequency on the assumption that frequency deviations are small. Since subsynchronous phenomena introduce voltage and current components at frequencies significantly different from the fundamental (power) frequency, constant fundamental impedance models would introduce errors into calculation of subsynchronous interaction. The mechanical characteristics of turbine generators either can be included in the system model or rotor interaction can be calculated separately by consideration of the electrical quantities and mechanical characteristics of each unit.

### 6.4 Required system data

It is important to first identify the ac system characteristics and operating parameters for each technical problem to be studied. As explained in Part I, each aspect of ac/dc interaction demands a particular set of data.

#### 6.4.1 System configurations

Typically, normal operation is not the most demanding. Consequently, it is necessary to review, in detail, all the possible configurations of the dc and associated ac systems in order to identify, for each category of problem, the ac system configurations that give rise to the most onerous conditions, in terms of SCR, harmonic resonance, and inertia. They may arise from the loss of one line or generator (N-1), or from the simultaneous loss of two circuits or plants (N-2), particularly when maximum dc power is still required. The identified conditions should be defined in the performance criteria.

#### 6.4.2 Location of generators and loads

The supporting data, in exposing the proximity of the dc station to consumers and generation, will be a basis for assessing overvoltages, harmonic levels, and subsynchronous interaction. Any existing dc stations also have to be identified as potential sources of adverse interactions.

#### 6.4.3 Reactive power balance and voltage control

Information should be obtained on key locations in the ac systems associated with each dc station in order to assess whether improvements there could economically offset the extent of compensation at the converter stations. For example, if modifications can easily be made to automatic voltage regulators or other control loops in generators, existing SCs, or SVCs, they may provide economical solutions to some integration problems.

Copyright © 1997 IEEE. All rights reserved.

Copyright The Institute of Electrical and Electronics Engineers, Inc.
Provided by IHS under license with IEEE
No reproduction or networking permitted without license from IHS
Not for Resale

### 6.4.4 Protection strategy

It is important to know the performance of ac protection. This information will permit the derivation of the profiles of ac voltages to which the dc station will be subjected under disturbed conditions. The first set of protection data concerns the transmission lines—the clearing times of various types of ac faults, and any auto-reclosure data, are necessary in evaluation of the response of the converters. The second set identifies any settings of overvoltage, overcurrent, overspeed, and underspeed protection that may affect the ac/dc interaction as a result of generator tripping. It is also important to identify any provision for load tripping due to frequency deviations.

Any protection that separates the ac system into isolated subsystems, following a loss of synchronism of an identified area, has to be included in the protection list to be provided for the studies.

### 6.4.5 Recovery from faults

The strategy and ramp recovery rate of the integrated system from ac and dc faults will highly depend on the requirements for maximum admissible duration of faults and power transferred during faults. A power recovery profile limit must be defined for acceptable ac dynamic performance. Generally the response of a dc link is sufficiently fast not to interfere adversely with machine swings, and to cause transient instability.

A maximum number of admissible repetitive dc faults (commutation failures) must also be specified as a result of preliminary stability studies.

Overvoltage limits should also be given as a consequence of the insulation coordination strategy for the ac system. The duration of circuit breaker clearing and backup must be provided to define the dc power recovery strategy in case of maloperation of ac protection.

### 6.4.6 Reliability requirements

Since the design of the dc system is influenced by the reliability and availability targets, it is necessary to assemble the relevant data of the following:

— Auxiliaries
— Redundancy in control equipment
— Acceptable outage power for long and short terms
— Temporary dc overload capacity
— Possible monopolar operation of a bipole
— Earth return specification
— Reliability of telecommunications
— Spare strategy for HV equipment
— Annual maintenance requirements

### 6.4.7 Cost of losses

The cost of losses should be established in preparation for the selection of a compensation strategy, as well as the required steady-state or transient performances of the dc link. In long-distance dc transmission schemes, the cost will also be of major importance in the definition of the dc voltage.

### 6.4.8 Harmonic distortion limits

Prior to the design of filters, and the special attention given to low-order resonances in low and very low SCR applications, it is necessary to obtain harmonic distortion limits. There is naturally an economic penalty should an unduly low harmonic limit lead to the installation of additional filters.


Copyright © 1997 IEEE. All rights reserved.
Copyright The Institute of Electrical and Electronics Engineers, Inc.
Provided by IHS under license with IEEE
No reproduction or networking permitted without license from IHS
Not for Resale

# 7. Examples of system studies

## 7.1 Introduction

Examples will be summarized from the literature (Hung [B27], Beard et al. [B4], Liss and Smedsfelt [B39], Kanngiesser [B30], Krishnayya et al. 1984 [B34], McConnach et al. [B41], Klenk et al. [B32], Thio and Davies 1991 [B63]) concerning the derivation of study criteria, performance analysis, and specification during the planning stage of low SCR and low inertia dc projects.

McConnach et al. [B41] is an example of reliability and economic comparison studies. Kuruganty and Woodford 1987 [B36] contains similar studies and can be used as a good example for ac/dc comparison.

## 7.2 Itaipu transmission system

The Itaipu HVDC transmission scheme consists of two ±600 kV, 3150 MW bipoles, with two 12-pulse converters connected in series in each pole. It transmits power from nine 700 MW, 50 Hz generators at Itaipu hydro generating station to the Ibiuna (formerly Sao Roque) converter station in southeastern Brazil, over a distance of 800 km. The converter station at Foz do Iguacu (sending end) is connected to the 500 kV ac bus. Several 345 kV and 500 kV lines from the Ibiuna station feed power to the load centers in southeastern Brazil (see 8.12).

The digital and simulator studies, which were mainly to establish the characteristics of reactive compensation to be used in Itaipu, are described in detail in Peixoto et al. 1980 [B49]. This comprehensive study includes all the main aspects that should be examined in planning long-distance dc transmission terminating at a low SCR location.

The paper discusses the study design criteria, including, in particular, items related to low SCR systems such as TOV limits, recovery times, and resonances.

### 7.2.1 Digital studies

Digital studies were performed to determine the overall performance of the system. The paper discusses means to represent the dc controls and their implication on different aspects of system performance—a typical difficulty at the outset of system planning.

A major requirement of the digital studies was to evaluate the effects of the assumptions made in relation to the dc control system behavior. For low SCR systems, the most important effects to be analyzed are bypass or blocking for faults at various ac system locations; recovery rate following bypass operation or blocking; supplementary stabilization signals; control modes; and the number, initial operating conditions, and rate-of-response of dynamic reactive supply equipment. In the study of the dynamic stability of the Itaipu system, some of the assumptions were given particular attention, such as recovery rate after faults; control mode (constant power or constant current); rate and response time of the reactive equipment; VDCOL characteristics; and modulation and blocking criteria.

The following aspects of the TOV problem were also examined in Peixoto et al. 1980 [B49]: the type of disturbance to be considered, critical load and operating conditions, and the effects of the different types and the characteristics of reactive equipment (synchronous and static compensators, and combinations of both).

### 7.2.2 Simulator studies

To supplement the digital studies, investigations were carried out on a dc simulator to examine the following items: the effect of commutation failure during recovery; the relation between the rating and response time

Copyright © 1997 IEEE. All rights reserved.

Copyright The Institute of Electrical and Electronics Engineers, Inc.
Provided by IHS under license with IEEE
No reproduction or networking permitted without license from IHS
Not for Resale

of reactive support equipment, on one hand, and the recovery rate, on the other; and the interaction between reactive equipment control and dc control.

The different dc and ac system representations (static and dynamic), which were used in the studies, are also discussed, as well as the quality of the recovery in terms of its acceptability, the effect of some protective and restoration sequences, the stability margin of the valve group control, and the influence of ac system representation on the study results.

A major part of the discussion on simulator studies deals with the selection of the reactive compensation, i.e., a SC, a SVC, or a combination of both.

## 7.3 Chateauguay (Hung [B27])

The Chateauguay back-to-back converter station consists of two completely independent 500 MW, 12-pulse units. It is supplied at 315 kV from Hydro-Quebec (HQ) and at 120 kV from the New York Power Authority (NYPA) (see 8.5).

The New York side of this back-to-back dc station between Quebec and the State of New York has a low SCR, while the SCR on the Quebec side is high. Hung [B27] initially examines the reactive compensation requirements for the project, particularly the needs of the inverter (New York) side due to the low SCR that can fall to 2.7. From this study it was concluded that an SVC should be used.

Next, the paper describes the simulator studies of the steady-state performance of the interconnection, its recovery from faults, and its performance after load rejection. The modeling of the ac and dc system components and the converter controls is discussed in some detail in the context of low SCR. Of particular interest is the discussion on the second harmonic content of the overvoltage after load rejection. Comparisons are made between SVC and shunt capacitors, and between TSCs and TCRs.

## 7.4 Highgate

This is a 200 MW monopolar back-to-back interconnection between Hydro-Quebec and the Vermont Electric Power Company (VELCO) (see 8.4).

Significant low SCR aspects of the planning of this back-to-back project are provided in Johnson et al. ([B28] and [B29]). This paper is of particular interest because it documents the solutions adopted in accommodating very low values of SCR without the installation of SCs or SVCs for reactive support.

The paper concentrates on the studies and remedies used to correct the voltage regulation and the TOV problems resulting from the very low SCRs. In addition, the paper deals with simulator studies of dynamic performance.

The discussion deals with the voltage regulation requirements of the ac systems under steady-state and switching conditions in order to establish the design criteria. Then, overvoltage conditions are discussed in terms of circuit breaker transient recovery voltage requirements under load rejection overvoltages; energy requirements of surge arresters; maximum overvoltage acceptable to the customers; and the need to replace lightning arresters installed in some of the nearby substations.

It also describes the control and protection philosophy used to comply with the requirements of the ac systems with respect to steady-state voltage control, overvoltages, and dynamic performance.


Copyright © 1997 IEEE. All rights reserved.
Copyright The Institute of Electrical and Electronics Engineers, Inc.
Provided by IHS under license with IEEE
No reproduction or networking permitted without license from IHS
Not for Resale

## 7.5 Gotland

The Gotland HVDC transmission project transmits power through submarine cables from the mainland of Sweden to the island of Gotland. Gotland I was commissioned in 1954 with a 20 MW rating. The second link, commissioned in 1983, has a rating of 160 MW. It uses a monopolar 150 kV cable with sea return. The SCR at the mainland ac bus is high. On the Gotland side, the ac system at the 70 kV connection is mainly passive. The short-circuit capacity is primarily contributed by four SCs, having a total rating of 195 MVA, which are installed on the 70 kV ac bus (see 8.9).

Liss and Smedsfelt [B39] discusses the different problems that have to be investigated for this type of interconnection such as: frequency control with and without communication, start up of the system, criteria for frequency control, and performance of the system for small and large perturbations. Some options to solve these problems are considered together with the basic items in the definition of the rating of the SCs. The paper also includes some oscillograms obtained in the commissioning tests and from simulator studies, which give an indication of the system performance.

## 7.6 Virginia Smith (formerly Sidney)

This 200 MW back-to-back converter station also interconnects the eastern and western ac systems in the USA (see 8.3).

The criteria and solutions adopted in the design to solve critical interaction problems related to operation with an SCR as low as 2.25 are described in Klenk et al. [B32]. The paper discusses design aspects of reactive and voltage control, special start-up procedures, and a special scheme for power modulation.

The voltage and reactive control is achieved through converter control by tap changing on the converter transformers. TOVs are limited to 1.25 pu within 2 cycles by a combination of switchable lightning arresters (TOV limiters) and bypass operation for faults close to the converter ac bus. A special start-up sequence avoids the 10% voltage increase produced by switching in the filter (105 Mvar).

In addition to the special features related to the low SCR, the paper details the simulator studies of a remedial action scheme (RAS) of power modulation to take care of a potential power-angle instability of the interconnected system.

## 7.7 MTDC system studies

Kanngiesser and Ring [B30] and Krishnayya et al. 1984 [B34] describe simulator studies to determine the performance of a multi-terminal direct current (MTDC) system with small series and parallel converter taps at low SCR locations. The papers are a good basis to formulate a minimum study program for MTDC planning.

The paper on parallel taps discusses in detail the system operating strategy, the implication of having an interconnection with a weak ac system, and the dynamic performance of the system for different faults in the ac and in the dc systems. Different control and protection strategies to improve the system performance and to protect the small tap are also discussed.

The paper on series taps discusses in detail the ac and dc system modeling and examines different operating and fault conditions, such as start-up and shut-down of the tap, change of the dc current, change of power order, and faults in the ac and the dc system. Special restart sequences avoid commutation failures at the tap.

Copyright © 1997 IEEE. All rights reserved.

Copyright The Institute of Electrical and Electronics Engineers, Inc.
Provided by IHS under license with IEEE
No reproduction or networking permitted without license from IHS
Not for Resale

### 7.8 Reliability studies

Reliability studies are used in the first stage of the planning in conjunction with economic studies, for comparing ac and dc alternatives, to define the type of transmission to be adopted. Should dc be selected, reliability studies can define characteristics of the transmission scheme such as the number of bipoles, the number of converters per pole, the extent of spares and redundancy in the converter station, and the type of reactive compensation (of particular significance in low SCR applications), as explained in Clause 5.

McConnach et al. 1987 [B41] compares different ac and dc alternatives. Other topics are system performance in relation to transfer capabilities, losses, and operating flexibility. An economic comparison of the alternatives is also included.

The studies were carried out using the minimal cut-set technique and examine independent outages, common-mode outages, and overall system reliability. Consideration is also given to the outages due to over-tripping in the ac alternatives, i.e., outages involving a fault on one element and a false trip of another element. The paper discusses the assumptions to be used and the important topic of the outage data of ac and dc equipment.

There are other approaches to comparing ac and dc reliability. One of them consists of making the alternatives as equally reliable as possible; the final choice is then based on the comparative costs. Such an approach was considered in the study reported in (Hardy, Turner, and Zimmerman [B24]).

Kuruganty and Woodford 1987 [B36] describe a methodology to study the reliability of MTDC systems.

### 7.9 Additional references

Other papers (Frontin et al. [B17], Nyati et al. 1985 [B45], Flueckiger et al. [B15], Lochner and Daehler [B40], Nyati et al. 1986 [B46], Stemmler [B61], Kaufhold, Peters, and Povh 1987 [B31], Kolodzief, Breuer, and Hingorani 1985 [B33], Guimaraes et al. [B20]) refer to studies pertinent to this guide. Nyati et al. 1985 [B45] discuss the means to control temporary and transient overvoltages on the converter ac bus, and also discuss acceptable overvoltage criteria. Lochner and Daehler 1981 [B40] and Nyati et al. 1986 [B46] discuss the factors affecting low SCR interaction, such as recovery overvoltages, harmonic injection and instability, and commutation failures.

## 8. Examples of existing low and very low SCR systems

### 8.1 Introduction

This clause describes design data and operating experience for some of the HVDC projects that are connected to ac systems at low or very low SCR locations. As explained in Part I, Clause 2, categories of SCR and ESCR are as follows:

| | | |
|---|---|---|
| High | SCR ≥ 3 | ESCR ≥ 2.5 |
| Low | 3 > SCR ≥ 2 | 2.5 > ESCR ≥ 1.5 |
| Very low | SCR < 2 | ESCR < 1.5 |

For typical values of CESCR, $P_{MAP}$, and TOV, associated with the above system characterization, see Part I, 2.7.


Copyright © 1997 IEEE. All rights reserved.
Copyright The Institute of Electrical and Electronics Engineers, Inc.
Provided by IHS under license with IEEE
No reproduction or networking permitted without license from IHS
Not for Resale

There are several such dc systems in operation. Most of them have been commissioned since 1980. In some cases, the design takes into account that a normally high SCR becomes low as a result of a contingency, such as the loss of an ac line. For example, contingent operation with an ESCR less than 1.0 has been encountered, although, as will be described, it may be offset by a reduction in the dc power transfer limit. As explained in Part I, 2.2.1.3, the terms operating SCR (OSCR) and OESCR may be used to characterize operation within the normal rating.

In all cases, satisfactory performance has been achieved. Based on experience of these systems, it can be concluded that a low or very low SCR is not a technical limitation in the evaluation of a dc option in system planning. For selected dc schemes, it will be described how some of the following concerns, related to a low or very low SCR, were addressed during planning, preparation of the specifications, and in the design:

a) *TOVs*. The problem of TOVs caused by the interaction of ac and dc systems at low or very low SCR locations, as discussed in general terms in Part I, Clause 8.
b) *Voltage change on switching shunt reactance*. Switching of shunt reactive banks causes larger ac voltage changes as the SCR reduces. To avoid customer complaints, consideration should be given to the maximum allowable size of shunt reactive bank that can be switched.
c) *Recovery of the dc system from disturbances*. This problem, in the context of low and very low SCR situations, is described in Part I, Clause 10.
d) *Control and system instability.* These are discussed in Part I, Clauses 3, 4, 5, and 7.

Table 8-1 presents details of design data for 12 dc systems which have been selected as having a low or very low SCR under normal or contingency conditions. Included under the latter category is a system condition called islanding in which the dc converter station, either alone or with a single generating source, becomes disconnected from the remainder of the ac network

Seven of the schemes are back-to-back converter stations, three incorporate overhead dc lines (one of which is a three-terminal MTDC system), and submarine cables are used in the remaining two schemes

In addition to the terms SCR, ESCR, OSCR, and OESCR, a further term, critical ESCR (ECSCR), appears in Table 8-1. CESCRs in the table are calculated for operation at nominal conditions, i.e., for dc current, power, ac terminal voltage assumed to be at 1 pu, which is consistent with definitions given in Part I, 1.5. For CESCRs so calculated, MAP coincides with the operating point at nominal conditions (see 3.2.2.1). The margin between the operating ESCR and the nominal CESCR indicates the amount of additional power immediately available (see Figure 3-3 and Part I, 3.9). This is an important criteria: a weaker system than the one corresponding to a nominal CESCR would indicate operation on the “unstable” part of the MPC. Also, the relative ac system strengths of different HVDC schemes can be judged by comparing their CESCRs for nominal conditions. The actual operating ESCRs can be above or below the nominal CESCR, as can be seen from Table 8-1. For basic characterization of the ac system strength relative to a proposed dc rating, an appreciation of the SCR may suffice. Since the underlying factors for SCR and all the other terms are implicit in the system data, their calculation, and the concern for the precision of the calculation, is not a prerequisite for system analysis. However, it has been found that their consideration can provide supplementary insight into, and an aid to the explanation of, interaction phenomena. Thus, after a preliminary assessment of SCR, the other terms may selectively be considered in a more detailed appraisal of the operating conditions (see 3.2 and 4.2).

For preliminary planning, the MAP concept (see 3.2.2) can provide some insight into the understanding of design alternatives—to supplement, but not to replace, analytical or simulator studies.

From the standpoint of achieving performance objectives, such as ac voltage control while meeting power control objectives with a margin of security for both normal and contingent SCRs, the planning and design should not presume preconceived operating modes. It will be evident in the following projects that the dc control characteristics, and the ac reactive compensation, may well deviate from the basic provision of rectifier constant current/power, inverter constant extinction angle, and fixed ac shunt compensation..

Copyright © 1997 IEEE. All rights reserved.

Copyright The Institute of Electrical and Electronics Engineers, Inc.
Provided by IHS under license with IEEE
No reproduction or networking permitted without license from IHS
Not for Resale

## 8.2 Miles City converter station (Krishnayya et al. 1986 [B35])

This back-to-back converter station (200 MW dc rating) is one of the four dc links connecting the western and eastern ac systems in the USA. The converter station has a low SCR at both sides, an important aspect in the design of the system.

### 8.2.1 Temporary overvoltages (TOVs)

The total shunt capacitive Mvar required for converter operation and ac voltage support is 188 Mvar on the east side, and 218 Mvar on west side where studies indicated that, without alleviation, this large block of reactive compensation could result in ac TOVs above 1.55 pu under dc load rejection conditions. The strategy to limit TOV is the combination of an on-line three-phase bank of MO varistors, together with a fast post-disturbance restart of dc converter to consume reactive power. However, contingent measures, in case the converter fails to restart, were also considered.

**Table 8-1—Design and operating data of HVDC systems connected to low SCR ac systems—Part 1**

| Name of project | Rating | | | AC bus voltage kV | Year commis-sioned | CESCR | Normal system | | Contingency | |
|---|---|---|---|---|---|---|---|---|---|---|
| | MW | kV dc | kA dc | | | | SCR | ESCR | SCR | ESCR |
| Miles City (B-B) | 200 | 82 | 2476 | 230 (E)<br>230 (W) | 1985 | 1.8 | 2.75 (E)<br>2.00 (W) | 1.8<br>0.9 | 2.1 (E)<br>1.5 (W) [a] | 1.2<br>0.4 |
| Virginia Smith (Sidney) (B-B) | 200 | 63 | 4.14 | 230 (E)<br>230 (W) | 1987 | 1.5 | 8.6 (E)<br>5.2 (W) | —<br>— | 2.95 (E)<br>2.25 (W) | —<br>— |
| Highgate (B-B) | 200 | 56 | 3.6 | 120 (N)<br>115 (S) | 1985 | 1.4 | 2.1 (N)<br>2.4 (S) | 1.6 (N)<br>2.0 (S) | —<br>1.0(S) | —<br>— |
| Chateauguaya (B-B) | 2 × 500 | 140 | 3.6 | 315 (HQ)<br>120 (NY) | 1984 | 1.7 | High (HQ)<br>7.9 (NY) | —<br>7.6 | High (HQ)<br>2.4 (NY) | —<br>2.1 |
| Blackwater (B-B) | 200 | 57 | 3.6 | 230 (E)<br>345 (W) | 1985 | 1.5<br>($Q_d$ = 0.84)<br>1.9<br>($Q_d$ = 0.955) | 10.1 (E)<br>2.6 (W) | 9.6 (E)<br>2.1 (W) | 4.7 (E)<br>Less than 1.0 (W) | 4.1 (E)<br>less than 1.0 (W)<br>Power reduction |
| Vindhyachal (B-B) | 2 × 250 | 139.4 | 1.8 | 400 (N)<br>400 (W) | 1988 (EST) | 1.6 | High (N)<br>4.4 (W) | High (N)<br>3.8 (W) | High (N)<br>1.4 (W) | OSCR = 2.8 (W)<br>OESCR = 2.2 (W) |
| Gotland II (cable) | 130 × 2 | 150 | 910 | 130 (ML)<br>70 (GL) | 1983 | 1.5 | High (ML)<br>1.8 (GL) [b] | High (ML)<br>2.7 (GL) [b] | —<br>— | —<br>— |
| Cross Channel (cable UK terminal) | 2 × 1000 | ±270 | 1.85 | 400 | 1986 | 1.7 | 3.0 | 2.4 | 2.4 | 1.9 |
| HQ-New England (dc line) Comerford Sta. | 690 | ±450 | 0.76 | 230 (HQ)<br>230 (NE) | 1986 | 1.4 | 2.3 | 1.3 | —<br>— | —<br>— |
| Itaipu (dc line) | 6300 | ±600 | 2.625 | 500 (FT)<br>345 (TB) | 1984–88 | 1.5 | 2.5 | 1.9 | 2.2 | 1.7 |
| Alberta-Sask. (McNeil) (B-B) | 150 | 42 | 3.62 | 138 (Alb)<br>230 (Sask) | 1989 | 1.4 (Alb)<br>1.4 (Sask) | 3.3 (Alb)<br>1.9 (Sask) | 2.6 (Alb)<br>0.9 (Sask) | < 3.3<br>1.9 | < 2.6<br>0.9 |
| Nelson River BP1 (dc line) BP2 | 1835<br>2000 | ±463<br>±500 | 1.98<br>2.0 | 230 (DOR) | 1972<br>1985 | 1.6<br>2.0 (DOR) [c] | —<br>— | 3.0 (DOR)<br>> 3.0 (DOR) | —<br>— | 2.7 (DOR)<br>2.5 (DOR) |

NOTE—ML = mainland of Sweden; DOR = Dorsey; GL = Island of Gotland; BP1 = bipole 1; BP2 = bipole 2

[a] 150 MW maximum transfer for west to east direction
[b] Based on $X_d'$ of synchronous compensators (2.7 and 2.4, based on $X_d''$)
[c] $P_d$ = 1.1, $V$ = 0.95


Copyright © 1997 IEEE. All rights reserved.
Copyright The Institute of Electrical and Electronics Engineers, Inc.
Provided by IHS under license with IEEE
No reproduction or networking permitted without license from IHS
Not for Resale

**Table 8-1—Design and operating data of HVDC systems connected to low SCR ac systems—Part 2**

| Name of project | TOV limits | AC/DC interconnection requirements | | | $X_c$ (pu) | $\gamma'_{min}$ | $\gamma'_{op}$ |
|---|---|---|---|---|---|---|---|
| | | Voltage excursions | Recovery rate | Basic mode of control | | | |
| Miles City (B-B) | By 2 cycles—1.4 pu (E)<br>1.3 pu (W)<br>250 ms—1.2 p | 0–1.99 cy—8%<br>by 2 cy—2% | 500 ms—90% PDL | 1/, 2/, 3/ | 0.26 | 14.5° | 15° |
| Virginia Smith (Sidney) (B-B) | By 2 cycles—1.25 pu<br>250 ms—1.15 pu | 0–2.99 cy—8%<br>by 3 cy—3% | — | 1/, 2/, 3/ | 0.16 | 17° | 18° |
| Highgate (B-B) | $TOV_{fc}$ < 1.35 (N)<br>< 1.30 (S)<br>< 1.1 within 15 cy | ΔV < 2% | 100 ms to PL | 1/, 2/, 3/ | 0.13 | 17° | 20° |
| Chateauguaya (B-B) | 1.4 pu | ΔV < 5% | 400 ms to 90% PDL | 1/, 2/, 3/ | 0.18 | 17° | 17–23° |
| Blackwater (B-B) | 1.2 pu | ΔV < 5% | 100 ms to PDL<br>300 ms from power reversal | 1/, 2/, 3/, 7 | 0.20 | 17° | 20–35°@ full load<br>85°@ Pmin. |
| Vindhyachal (B-B) | 1.5 pu | ΔV < 5% | 500 ms to 90% PDL | 1/, 2/, 3/ | 0.19 | 17° | 20° |
| Gotland II (cable) | < 1.3 pu | < 5% | | 2/, 5/, 6/ | 0.134 | 19° | |
| Cross Channel (cable UK terminal) | 0.5 s–1.17 pu | 6% | | 2/, 5/ | 0.23 | 15° | 15° |
| HQ-New England (dc line) Comerford Sta. | < 1.4 pu | | | 1/, 2/, 3/ | 0.13 | 14° | 18° |
| Itaipu (dc line) | < 1.4 pu | < 5% | 320 ms to 90% PDL | 5/, 2/, 3/ | 0.172 | 17° | |
| Alberta-Sask. (McNeil) (B-B) | 0.25 s, 1.4, 0.5 s, 1.3, 1.0 s, 1.2 | | 0.25 to 90% PDL | 2/, 4/ | 0.14 | 15° (Alb)<br>19° (Sask) | 19°–22.5° (Alb)<br>23.5°–26.5° (Sask) |
| Nelson River BP1 (dc line) BP2 | <1.4 pu | | | 3/ | 0.20 | 18° | |

NOTE—PDL = predisturbance level; 1/variable γ; 2/current control in rectifier; 3/power control mode; 4/inverter constant $V_d$; 5/inverter constant γ; 6/frequency control; 7/constant ac voltage control

The following TOV limits were specified:

| Period | TOV Limit |
|---|---|
| 0–2 cycles | No limit |
| 2 cycles, 250 ms | 1.40 pu west<br>1.30 pu east |
| 250–600 ms | 1.20 pu |
| After 600 ms | Greater of 1.05 pu or ±5% of voltage before disturbance |

Copyright © 1997 IEEE. All rights reserved.

Copyright The Institute of Electrical and Electronics Engineers, Inc.
Provided by IHS under license with IEEE
No reproduction or networking permitted without license from IHS
Not for Resale

The specific TOV control strategy is as follows:

a) The initial TOV is limited by customized multicolumn MO devices that have a discharge energy rating of 8.75 MJ. Because they are connected permanently to the ac bus, they are oil-cooled in order to accommodate the continuous power dissipation at the operating voltage.
b) The converter operation is restored within two cycles after a fault is cleared to meet the specified TOV limits by var demand.
c) The station, including filters and shunt capacitors, is tripped if the dc restoration is unsuccessful.

### 8.2.2 Recovery of the dc power from ac faults

In view of the low SCR, the specification accepted a relatively slow recovery of dc power to 90% of the pre-disturbance level within 500 ms, or to a stable but reduced level if required by a very low contingent SCR of 1.5. In the final design, further to the var control of TOV, power is restored in approximately 200 ms, except for the most severe disturbances. The recovery time is increased to 400–450 ms for the loss of key 230 kV lines on either side. In addition, loss of the east side Miles City-Dawson County 230 kV line requires the recovery power not to exceed 170 MW for east-to-west transfers. It was found from experience that the west-side system strength was insufficient to support west-to-east transfers above 175 MW.

### 8.2.3 Voltage changes due to switching

The size of voltage changes, in consideration of their possible impact on local distribution networks, was a key design consideration. The following limits were specified:

| Period | Voltage change limit (at 230 kV) |
|---|---|
| Up to 2 cycles | 8% |
| After 2 cycles | 2% |

The permissible voltage change determines the incremental switching size of reactive banks. The corresponding cost of the reduction in unit size and the increase in switching capability are attributable to the low SCR. The maximum allowable size of reactive bank that can be switched was calculated to be 15 Mvar based on the lower SCR on the west side. On-site tests on the east side have shown the actual instantaneous change in voltage to be 2.2%, well within the 8% limit. The capacitor switching triggers a temporary change to the delay angle to meet the 2 cycle 2% limit.

In the steady-state, the inverter operates in a regulator control mode to prevent the ac bus voltage from deviating more than 1% from a voltage reference.

## 8.3 Virginia Smith (formerly Sidney) (Klenk et al. [B32]; Kaufhold, Peters, and Povh [B31]; DeNomme and Holt [B10]; Piwko et al. [B50])

The SCR at both sides is high (8.6 on the east side, 5.2 on the west side) with full ac transmission capacity. However, loss of the Sidney-Stegall 230 kV line reduces the SCR on the west side to a low of 2.25. The ac/dc interaction problems and the adopted solutions, while having many similarities to Miles City, are specific to this project.


Copyright © 1997 IEEE. All rights reserved.
Copyright The Institute of Electrical and Electronics Engineers, Inc.
Provided by IHS under license with IEEE
No reproduction or networking permitted without license from IHS
Not for Resale

### 8.3.1 Temporary overvoltages (TOVs)

The specified TOV limits are 1.25 pu within two cycles, and 1.15 pu within 250 ms. These values are lower than those specified for Miles City and are achieved by the use of MO varistors that are switched by circuit breakers. It is necessary to coordinate the varistor switching with other switching actions in the ac system and with the converter control. The simplified sequence diagram is shown in Figure 8-1.

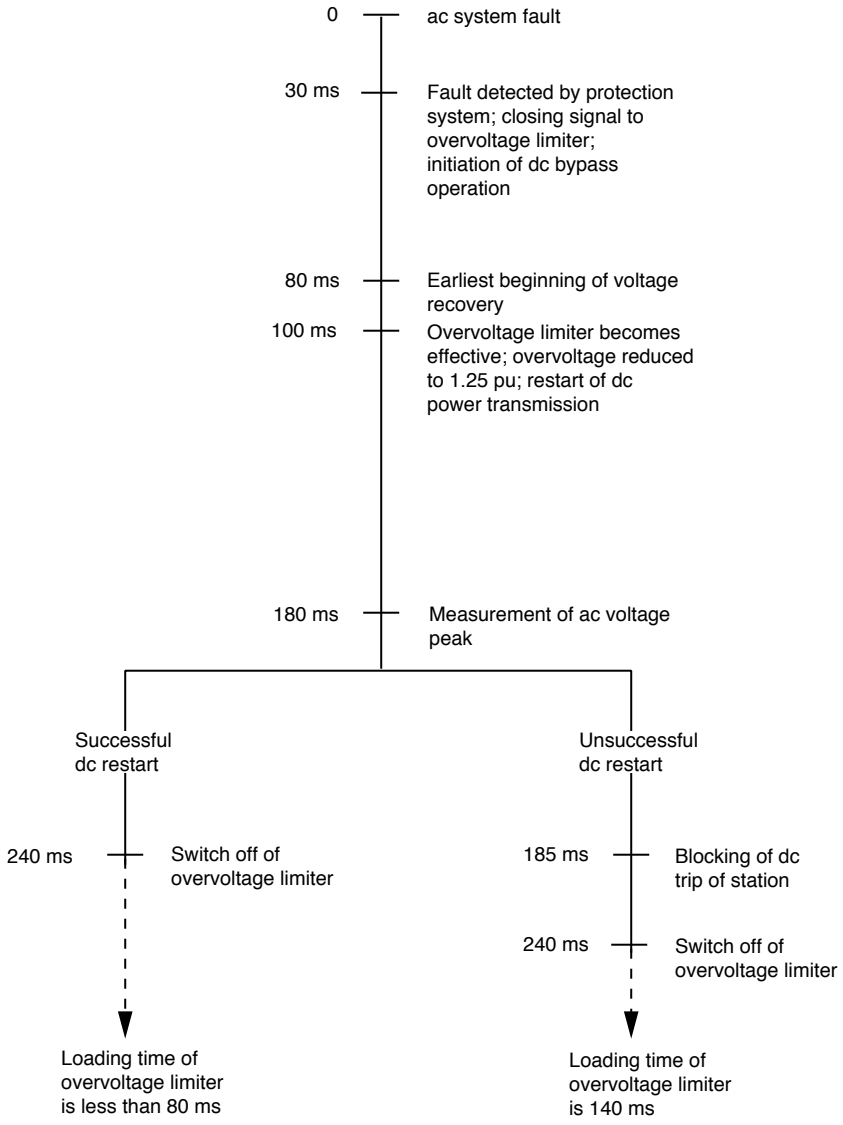


**Figure 8-1—Simplified operating sequence of the overvoltage limiter**

The varistor energy rating is based on the optimization of recovery time of the converter, and the station reactive power requirement. It should be noted that where the first reclosure after a fault is successful, the varistors are subjected to one sequence of energy absorption. However, they experience a second sequence when the reclosure is unsuccessful, the line fault being persistent. The varistors at Virginia Smith are designed to accommodate one 80 ms discharge period (successful dc restart), followed by a second period of 140 ms (unsuccessful dc restart), for a total rating of 28 MJ/phase.

Copyright © 1997 IEEE. All rights reserved.

Copyright The Institute of Electrical and Electronics Engineers, Inc.
Provided by IHS under license with IEEE
No reproduction or networking permitted without license from IHS
Not for Resale

### 8.3.2 Power modulation

Studies indicated that, with the dc power contribution to the eastern network, several types and locations of ac faults resulted in transient stability problems. They were alleviated by dc controls:

a) The control is provided with power modulation capability to damp generator rotor swings when power is transmitted from west to east. The power modulation is in response to generator shaft speed deviations at the Laramie River Station in Wyoming (east side).
b) The dc power is ramped down to a reduced transmission limit for
   1) The loss of either of two key lines on the west side, irrespective of the direction of dc power;
   2) An outage of the Virginia Smith-Stegall 230 kV line when the dc power flows from west to east;
   3) An outage of the Laramie-Story 345 kV line when the dc power is from east to west.
c) Ramping is also used as a backup for the case where the microwave signal between the dc station and Laramie generating station is lost after the modulation process has been activated.

### 8.3.3 Harmonic interaction

During the commissioning, a potential for low-order harmonic resonances near the fifth and seventh harmonics in the eastern network were discovered. To protect the nearby Laramie generator, the dc power is now interrupted if the fifth or seventh harmonics are excessive, as indicated by either a sustained firing angle imbalance exceeding ±0.2° or by special fifth and seventh harmonic relays.

## 8.4 Highgate (Beard et al. [B4], Krishnayya et al. 1986 [B35])

The ESCR can be as low as 1.7 under normal conditions and is accommodated without special reactive power support, such as SCs or SVCs. The northern ac bus is connected to the Hydro-Quebec system through a single 120 kV transmission line. The southern ac bus is connected to the single 115 kV transmission line feeding the Highgate substation on the VELCO system.

### 8.4.1 Basic control

As for other very low SCR installations, an increase in dc current, as a result of a disturbance, markedly reduces the inverter ac voltage. In turn, this tends to further increase the dc current, if in the power control mode, and to increase the overlap angle. Control modes have been selected to moderate such interaction. Sufficient dynamic range is incorporated into the firing angles to provide voltage control with variable $\gamma$. The steady-state $\gamma$ is 20° and the minimum $\gamma$ is somewhat less. The dynamic range is effectively extended by the temporary reduction of current order when there is a severe ac voltage reduction due to an ac fault: the consequent reduction in converter var consumption releases var from shunt compensation to assist the ac voltage recovery.

### 8.4.2 DC power reduction

Loss of certain ac lines within the VELCO system reduces the ESCR at the southern commutation bus to below 1.0 for which there would be the prospect of ac voltage collapse at the converter ac bus in attempting to maintain rated power. This is avoided by a reduction in the dc power order limit in response to ac line trip signals.

### 8.4.3 Control of temporary overvoltages (TOVs)

The prospective low-order resonance between shunt compensation and ac system impedance, and the consequential impact on TOV, is averted by the provision of damped low-order harmonic filters.


Copyright © 1997 IEEE. All rights reserved.
Copyright The Institute of Electrical and Electronics Engineers, Inc.
Provided by IHS under license with IEEE
No reproduction or networking permitted without license from IHS
Not for Resale

### 8.4.4 Special circuit breakers for capacitor switching

When capacitor banks are tripped to reduce load rejection overvoltages, the circuit interruption must be re-strike free. To this end, the circuit breakers, which switch the capacitors at 115 kV, are fitted with 220 kV heads. Other circuit breakers, that may be called on to provide back-up service, are installed as a series pair at each location. Both circuit breakers are tripped and reclosed simultaneously without an additional time delay for breaker failure protection.

## 8.5 Chateauguay (Hung [B27]; Krishnayya et al. 1986 [B35]; Hammad, Gagnon, and McCallum [B22])

On the Hydro-Quebec (HQ) side, the proximity of the 735 kV transmission system provides abundant short-circuit capacity. On the New York Power Authority (NYPA) side, where there is only one 765 kV link available for transmitting the power to the NYPA system from both the local Beauharnois generating station and the dc station,

a) The ESCR varies from 7.6 down to 2.1 for which TOVs and voltage regulation were design considerations;
b) There is a potential for second harmonic resonance due to the large blocks of required shunt capacitors;
c) Precautions are needed against self-excitation and motoring of the isolated Beauharnois units, should the 765 kV line be tripped.

The solution to a) and b) was the installation of two thyristor-switched capacitor/thyristor-controlled reactor static var compensator (TSC/TCR SVC) units connected to the 120 kV bus. The SVCs continuously regulate their reactive power output to match the var requirements of the dc converters and to enhance dc recovery. The fast SVC response permits the control of transient overvoltages following clearing of ac faults.

SVC control also avoids the potential second harmonic resonance that could be excited by fault clearing. Upon detection of such a condition, TSC banks are immediately switched off and the TCR branches are made fully inductive, thereby detuning the system from the second harmonic resonance.

Special measures to prevent self-excitation of the Beauharnois units after the loss of the 765 kV line, include blocking of dc converters, switching off filter and shunt capacitor banks, and tripping the Chateauguay-Massena line.

## 8.6 Blackwater (Krishnayya et al. 1986 [B35])

This 200 MW back-to-back converter station interconnects Public Service of New Mexico (PNM) and Southwest Public Service (SPS). The SPS connection is through a 230 kV line directly into a large substation and presents no significant problems of ac/dc interaction. However, on the PNM side, the converter is at the end of a long 345 kV line which, in the original design, was to be tapped in the middle and connected to a low short-circuit level 115 kV system. Consequently, there was an original requirement to accommodate a mainly passive network with a very low SCR after a trip of the remote 345 kV connection.

The potential problems of voltage control have been resolved by the exploitation of the var control capability of the dc converters. The converters are capable of operating continuously at high firing/extinction angles under various dc current loading conditions in order to provide the required control range. Operation is within the reactive power capability region shown in Figure 8-2.

Capacitance of the ac filters and the shunt reactors provides the necessary bias. Switching of these var units is coordinated by the dc converter controls. The var control capability of the converters is utilized under all

--`,,`-`-`,,`,,`,`,,`---
Copyright © 1997 IEEE. All rights reserved.

Copyright The Institute of Electrical and Electronics Engineers, Inc.
Provided by IHS under license with IEEE
No reproduction or networking permitted without license from IHS
Not for Resale

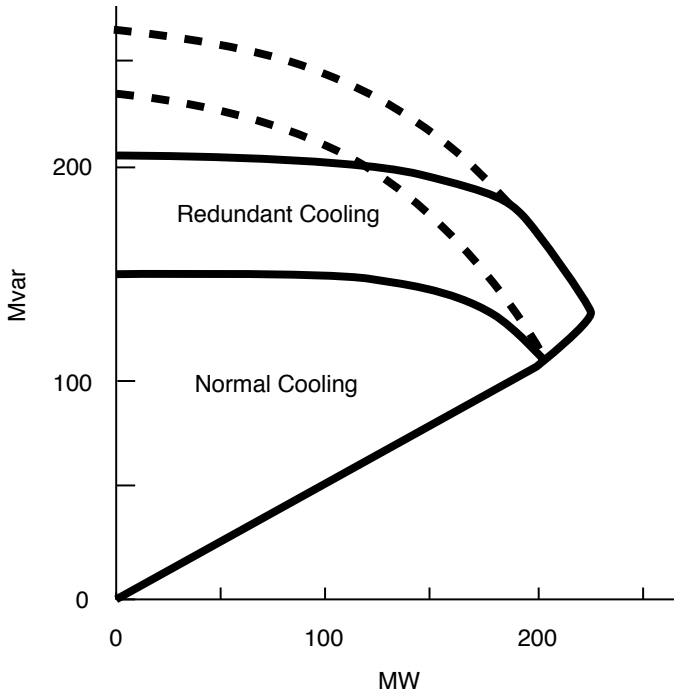


**Figure 8-2—Reactive power capability regions of Blackwater HVDC converters**

loading conditions. Under no-load conditions (loss of the SPS connection), the dc terminals are short-circuited and the converters on the PNM side operate exclusively as an SVC to regulate the ac voltage on the 345 kV line.

## 8.7 Cross Channel (Rowe and Brewer [B60])

This submarine dc link between England and France has a capacity of 2000 MW by two identical but independent bipoles, each ±270 kV, 1850 A dc.

The Sellindge terminal in England has an SCR of 3.0 in the 400 kV network. To regulate the ac voltage, two SVCs (saturated reactor type), each rated at ±150 Mvar, are connected to the 400 kV bus. They have a substantial short-term overload capacity (3.3 pu for 0.5 s). The TOV at the 400 kV bus is limited to 1.16 pu in the event of 2000 MW of dc load rejection, when the SCR is at the minimum specified value of 3.0. The four identical ac filters on each pole are switched in response to the transmitted power in order to maintain reactive power balance. In addition, a 200 Mvar shunt reactor is used for voltage control.

### 8.7.1 Islanding and operation with a passive ac network

The situation of “islanding” was considered in the design for the event that the Sellindge converter station, together with a nearby nuclear power station, should become disconnected from the rest of the ac network. To protect the generators and converters, for this contingency, the converter station is provided with under- and over-frequency protection.

Simulator studies also showed that the Sellindge terminal, when inverting, could continue to commutate into a passive system. This situation occurred following a succession of breaker trips during a storm in January 1987. Figure 8-3 illustrates the performance of the Sellindge converter station following the complete loss of the ac supply when one bipole was importing 500 MW. The waveforms show that the interrupted commutation during the fault period recovered when the only remaining line tripped. The bipole then re-established


Copyright © 1997 IEEE. All rights reserved.
Copyright The Institute of Electrical and Electronics Engineers, Inc.
Provided by IHS under license with IEEE
No reproduction or networking permitted without license from IHS
Not for Resale

commutation into harmonic filters, SVCs, and the auxiliary load alone. The frequency increased from the nominal 50–57 Hz in about 40 ms. This operated the over-frequency relay. The converter ac bus voltage rose to 1.5 pu, partly because of the effect of increased frequency on the characteristics of the SVC, and partly because the SVC was acting in the absence of the ac network.

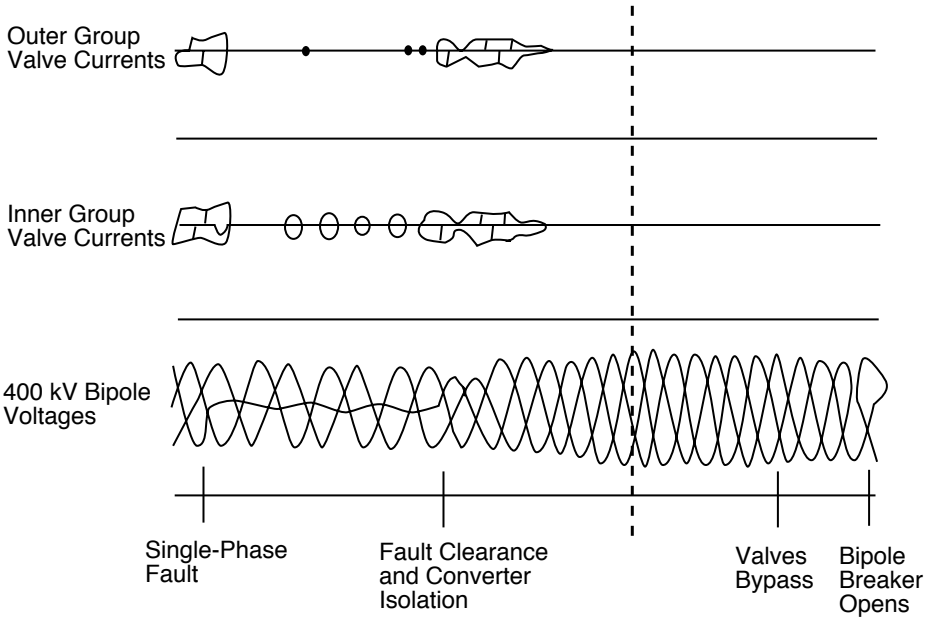


**Figure 8-3—Islanding of Sellindge (inverting)—SVC and ac filters connected to bipole**

This behavior demonstrates the capability of converters equipped with contemporary controls to invert into passive networks (the lowest conceivable SCR). As a possible contingency, it should be recognized in the design of the protective equipment. In such situations, an SVC can still exert some control over the ac bus voltage, even when disconnected from the ac network, and overvoltage protection can be contemplated for such a contingency in future schemes.

### 8.7.2 Second harmonic resonance

No second harmonic problems were foreseen at the minimum specified SCR of 3.0, and no resonant conditions have been encountered in service. However, second harmonic damping was incorporated into the converter controls in anticipation of future changes in the ac system.

## 8.8 Vindhyachal (Prasad et al. [B53], Rosenqvist et al. [B59])

The Vindhyachal back-to-back HVDC link is comprised of two independent 12-pulse converters, each rated at 250 MW. It interconnects northern and western regional grids in India. The northern SCR is high. The western side is connected to the Vindhyachal thermal generating station through a short bus extension. During normal conditions in the initial stages of operation of the dc link, this bus will have a SCR of 4.4.

During the planning studies, it was observed that for a 5-cycle, 3-phase fault at the western ac bus, the Vindhyachal generators lose synchronism with the rest of the western grid and cause tripping of the Vindhyachal-Korba line. This reduces the SCR on the west side to a low of 1.4 (i.e., to a very low SCR). Studies also showed that dc power modulation, in response to ac bus frequency, could provide positive damping for this situation.

Copyright © 1997 IEEE. All rights reserved.

Copyright The Institute of Electrical and Electronics Engineers, Inc.
Provided by IHS under license with IEEE
No reproduction or networking permitted without license from IHS
Not for Resale

### 8.8.1 Islanding operation

For dc power transfer, the critical case would occur when the Vindhyachal generators radially feed the converters and become separated from the rest of the western network. Under this islanded mode of operation, a trip of one or two generators, or one of the two converter units, results in the remaining generators achieving excessive speeds, if no remedial action is taken. A frequency controller was incorporated in the dc controls to maintain the generator frequency within the permitted band of 47.5–51.5 Hz. The controller, which responds to bus frequency and acts on the power regulator, is activated for rectifier (export) operation only.

The performance of the dc link during this mode of operation and for the worst-case frequency control scenario, i.e. a trip of one out of two Vindhyachal generators, is shown in Figure 8-4. The dc power is quickly reduced when the frequency deviation exceeds the dead band of the frequency controller, and tripping of the remaining Vindhyachal generator is thereby avoided.

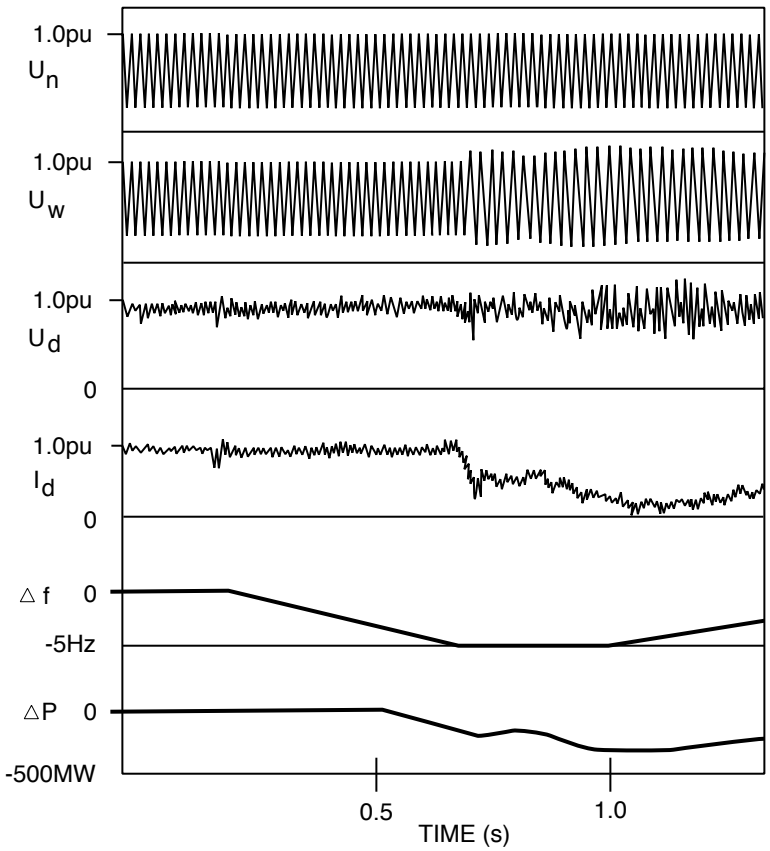


**Figure 8-4—Performance of frequency controller at Vindhyachal converter station**

## 8.9 Gotland (Liss and Smedsfelt [B39])

On the Gotland side, the SCR and ESCR are 1.8 and 1.6, respectively, based on the transient reactance of the SC; and 2.7 and 2.5, respectively, using the subtransient reactance. Hence, the SCR can be classified as *very low*. It is a good example of how a dc system can feed power successfully to an isolated ac load network.


Copyright © 1997 IEEE. All rights reserved.
Copyright The Institute of Electrical and Electronics Engineers, Inc.
Provided by IHS under license with IEEE
No reproduction or networking permitted without license from IHS
Not for Resale

### 8.9.1 Frequency control

In the absence of generators, the Gotland frequency is controlled entirely by converter control. Thus, frequency control is the principal function of the master control: the current order transmitted to the rectifier (mainland) is derived from the sum of the set power order and that required for frequency control. To meet the conflicting requirements of frequency control during steady-state and during transient disturbances, the controller is provided with a proportional-integral transfer function.

### 8.9.2 Frequency controller performance

Loss of power transmitted to the island due to a severe fault in the mainland ac system causes a decrease of frequency on the island. The rate-of-change and amount is determined by the duration of the fault, the inertia of the SC and the prefault power level. For a 3-phase fault lasting 5 cycles on the mainland, the corresponding duration of island power loss is 0.215 s (see Part I, 9.2.2.1) which is calculated to reduce the island system frequency by 2.3 Hz.

Since the ac buses for both poles are interconnected at the island terminal, ac faults and commutation failures mutually disrupt the total dc power. Recovery from commutation failures is longer due to charging time-constants of the dc cable compared to overhead line schemes. Nevertheless, the frequency excursion is reduced by the performance of the SCs during the reduced ac voltage disturbance.

In addition to the procedure for starting and synchronizing of the dc transmission with the island network, there is also provision for operating the frequency controller without telecommunication.

Thus, among the features of a dc link feeding to an isolated ac network are those associated with the frequency control of the receiving network. Such receiving systems inherently tend to provide a low or very low SCR, and require moderation in the rate of recovery after ac system faults.

## 8.10 Comerford (Piwko et al. [B50])

The Hydro-Quebec-New England System Phase 1 project consists of a ±450 kV dc line, 171 km long, from Des Cantons in Quebec to Comerford in New Hampshire, with a bipole rating of 690 MW. The ac system voltage at Comerford is 230 kV with a short-circuit capacity of 1600 MVA when all lines are in service. During nominal operation, the converters consume 350 Mvar. However, long lines within the ac system require additional reactive compensation when heavily loaded in order to maintain ac bus voltages at satisfactory levels in the vicinity of the converter station. This results in a total installed rating of 819 Mvar from the combination of shunt capacitors and ac filters, and 238 Mvar from shunt reactors. Voltage changes due to their switching are kept to acceptable levels by the use of relatively small bank sizes.

### 8.10.1 Control of temporary overvoltages (TOVs)

Consideration of the above parameters indicates very low values of SCR and ESCR, particularly for ac line outages and when local hydro generators are out of service. Both a model simulator and EMTP were included in the study.

This system, not surprisingly, exhibited a potential for high TOV which included the harmonic components contributed by the low natural resonant frequency and the effects of transformer saturation under fault conditions. MO devices were incorporated at Comerford to limit the ac overvoltage to 1.4 pu, with an energy absorption capability of 20 MJ, as determined by Piwko et al. [B50]. The energy rating provides voltage control, either up to a successful restart or, by default, until relieved by the opening of circuit breakers. For reliability, the MO devices are assembled in four groups per phase with three required for the required energy rating. They are installed line-to-ground, with 11 parallel columns per group on each phase, and line-to-line

Copyright © 1997 IEEE. All rights reserved.

Copyright The Institute of Electrical and Electronics Engineers, Inc.
Provided by IHS under license with IEEE
No reproduction or networking permitted without license from IHS
Not for Resale

with seven columns per group. Being permanently connected to the ac bus, the steady-state loss was an important design aspect.

### 8.10.2 Control of ac voltage changes

At Comerford, the voltage and current orders, tap changing, and reactive power compensation control are coordinated to achieve the desired control performance with a concern for voltage deviations. Although a continuously operating closed-loop ac voltage control function assists in regulating the ac bus voltage, control stability constraints preclude a response sufficiently fast for voltage deviations due to reactive power switching. An additional open-loop voltage control function is initiated by the reactive switching. This feed-forward action forces the converter firing angles to a suitable post-switching value by the application of a pre-determined step to the input of the primary regulator, whereupon the closed-loop ac voltage regulator can take over. The magnitude of the step function depends primarily on the power direction, the size of the compensation element being switched, and whether the compensation change is increasing or decreasing the reactive power on the ac bus.

### 8.10.3 Power run-back

Loss of a 230 kV line feeding the Comerford station results in an operating SCR sufficiently low for ac voltage stability to be a concern. An automatic dc power run-back based on the status of ac lines was specified and installed.

## 8.11 Nelson River (Thio and Davies [B63])

Bipole I (±463 kV, 1835 MW, 897 km) and bipole II (±500 kV, 2000 MW, 940 km) interconnect separate rectifier stations on the Nelson River to one inverter station in southern Manitoba at Dorsey. The ESCR for each bipole at the sending end is typically 3.0 ($\phi = 85°$) with a minimum of about 2.7 ($\phi = 85°$) based on $X_d$" of the generators. The design minimum ESCR at Dorsey at the common inverter 230 kV ac bus is 2.5 ($\phi = 80°$) based on $X_d$" of machines, new generation totalling 3500 MW, 757 Mvar contributed by ac filters, nine SCs (six +160/–80 Mvar and three newly installed +300/–165 Mvar). This is with the simultaneous contingent outage of one 300 Mvar and one 160 Mvar compensator. Otherwise, the normal operating ESCR is 3.0 or higher.

### 8.11.1 Selection of SCs

It was considered that the new 300 Mvar SCs could uniquely strengthen the ac system, as required to accommodate additional dc power, could reduce voltage depressions caused by ac faults, and could improve commutation failure performance.

The compensators were specified to achieve an ESCR of the ac system together with the compensators larger than the target ESCR of 2.0, when based on $X_d'$, and 2.5, when based on $X_d$". Of the two criteria, the former was selected to ensure operation below $I_{MAP}$ in the context of MAP (see Part I: 2.5, and Part II: 4.2.2.1). In order to arrive at the used ESCR, Manitoba Hydro developed and used the following approximate formula for CESCR in planning studies:

$$CESCR = \frac{P_d[X_{pu}P_d/(2V\cos\theta) + (1 - \cos^2\theta + [X_{pu}P_d/(2V)^2])^{1/2}]}{V\cos\theta_n \tan\theta[\cos\theta - X_{pu}P_d/(2V)]} \quad (5)$$

where

$P_d$ is the inverter dc power (per unit)
$V$ is the inverter ac bus voltage (per unit)
$X_{pu}$ is the commutation reactance in per unit on the converter transformer base


Copyright © 1997 IEEE. All rights reserved.
Copyright The Institute of Electrical and Electronics Engineers, Inc.
Provided by IHS under license with IEEE
No reproduction or networking permitted without license from IHS
Not for Resale

$\cos\theta_n$ is $\cos\gamma - X_{pu}/2$ = nominal full load power factor of the inverter
$\cos\theta$ is $\cos\gamma - X_{pu}P_d/(2V) = (\cos\gamma + \cos[\gamma+u])/2$
$\tan\theta$ is the actual load power factor of the inverter

Manitoba Hydro claims Equation (5) gives a slightly more conservative (i.e., higher) value of CESCR the exact (i.e., not approximate) Equation (9) in Part I, 2.5. (System damping is neglected, i.e., $\phi = 90°$, in both equations. See Part I, 2.5, Equation (8), for CESCR with damping included, i.e., $\phi < 90°$)

Manitoba Hydro has the requirement that power modulation capability be maintained at $P_d = 1.1$ pu and $V = 0.95$ pu at $X_{pu} = 0.20$ and $\gamma = 18°$, resulting in a CESCR = 2.0 criteria. To achieve rated power at those conditions, the required CESCR would be equal to 1.6 as indicated in Table 8-1 (i.e., the system could have been weaker than the criteria selected by Manitoba Hydro).

More recent studies have shown that the response time of the SCs and their controls are sufficiently fast to justify the use of a reactance closer to $X_d$", rather than $X_d$´, in the context of CESCR.

### 8.11.2 Control features

In order to avoid voltage instability under certain contingencies of reactive compensation, the dc voltage input to the dc power control is held at the nominal value, should the measured voltage fall to less than 0.95 pu for longer than 30 ms (and resets when the restored ac voltage exceeds 0.97 pu for 100 ms). Power modulation, important for ac system damping, is preserved.

Other special dynamic controls are as follows:

— Sending end dc power control to control ac frequency while being coordinated not to conflict with power run-back.
— DC power run-back is invoked with a 15 s time-constant for certain receiving end line-trips to prevent cascade tripping.
— Power modulation, based on ac bus voltage phase angle, to damp receiving system oscillations up to 3 Hz.
— Slower modulation for Dorsey frequency control in islanding situations (with a gain of 0.32 MW/Hz/MW).

### 8.11.3 Temporary overvoltages (TOVs)

Ferroresonant sending end overvoltages on energization of sending-end transformers may reach 1.8 pu. The highest recorded TOV is 1.55 pu. Bipole II transformers are energized through preinsertion resistors.

The predicted TOV at either end with partial load rejection without consideration of transformer saturation, is about 1.25 pu. The TOV after full-load rejection is initially 1.23 pu (with $X_d$") and 1.29 pu after 70 ms (with $X_d$´). Regulator action reduces the voltage to 1.15 pu within 150 ms.

Of interest to this guide, derived values of TOV and ESCR for the receiving end were entered into Equation (2) (see 4.4.1) to calculate the ac damping angle to be 80°. In combination with the SCR value, it permitted the derivation of a simple equivalent circuit of the receiving system, excluding filters, for basic simulator or digital studies.

## 8.12 Itaipu (Peixoto 1980 [B47], Peixoto et al. 1980 [B49], Porangaba et al. [B51], Praca et al. [B52], Canelhas, Eriksson, and Pereira [B6])

The importance of moving such a large block of power (6300 MW) (see 7.2), and the prospect of low SCR circumstances, required extensive digital and simulator studies to define ac/dc interaction problems and to develop solutions. The lowest studied SCR of the receiving ac systems was 2.2, and the lowest studied ESCR was 1.7. In service, the minimum OSCR has been 1.8.

Copyright © 1997 IEEE. All rights reserved.

Copyright The Institute of Electrical and Electronics Engineers, Inc.
Provided by IHS under license with IEEE
No reproduction or networking permitted without license from IHS
Not for Resale

### 8.12.1 Reactive support and voltage control

Based on extensive digital and simulator studies, four SCs, 300 Mvar each, were installed at the inverter end to provide reactive power balance, voltage control and improve stability performance. Additional reactive power compensation is provided by 1500 Mvar from harmonic filters at Foz do Iguacu, and 3000 Mvar from harmonic filters and shunt capacitor banks at Ibiuna.

### 8.12.2 Recovery after inverter ac faults

Stability studies indicated that rapid recovery after an ac system fault would cause instability, specially during heavy load conditions in the receiving system. Solutions adopted for this problem are as follows:

a) Increasing the dc voltage measurement time constant from 50–500 ms. This slows down the dc power variations sufficiently to enable SCs to maintain constant ac voltages.
b) Extending the restart time from 160–320 ms.
c) Limiting the current order during recovery to that of the pre-fault value. This reduces the reactive power demand during recovery, thereby helping to reduce the risk of commutation failure.

### 8.12.3 Modulation for dynamic stability

Studies also indicated a critical post-fault dynamic stability problem in the region of Rio de Janeiro, where the oscillations of generators were more marked than elsewhere. It was resolved by reactive power modulation at the inverter ($\gamma$ modulation), with a band-pass characteristic that is centered at the oscillation frequency of 1 Hz.

### 8.12.4 Sending end ac faults

The Itaipu transmission capacity is equivalent to about a sixth of the generation capacity of southeastern Brazil. Without precautions, a solid three-phase fault in the rectifier ac system, and consequent loss of dc transmission capacity, could cause a complete collapse of the receiving end system. Consequently, special controls were introduced to rapidly restore the dc power. These are the following:

a) *Rectifier minimum* $\alpha$ ($\alpha_{min}$) *limiter (RAML)*. This temporarily increases $\alpha_{min}$ of the rectifier during and immediately following an ac fault in the sending end system. The action reduces the dc voltage and consequently shifts the mode of the inverter into current control. This advances the inverter firing angle to provide an increased extinction angle and, in turn, an increased margin against commutation failure. Upon fault clearance the $\alpha_{min}$ limit returns gradually to its original value of 5°.
b) *Rectifier current regulator—integrator* $\alpha$ *clamp*. This modifies the control response at the rectifier in order to reduce current overshoot. It decreases the risk of inverter commutation failure.

### 8.12.5 Stresses on ac filter arresters

The combination of a large amount of shunt compensation required at the converters and the high ac system impedance created a low-order parallel resonance condition. Studies showed that noncharacteristic harmonics, resulting from continued converter operation during imbalanced faults, would induce overvoltages on the third and fifth harmonic filters at both converter stations. Their arresters would be stressed to approximately 10 MJ. Other arresters experience energies between 0.2 MJ and 5.0 MJ. The energy is absorbed mainly during the fault, with the rest during the recovery period.

## 8.13 McNeill

This 150 MW back-to-back converter station is located near Medicine Hat in Alberta, Canada, and interconnects the ac systems of the provinces of Alberta and Saskatchewan. This is the first interconnection in Canada between the western and eastern systems. The ESCR at the Saskatchewan commutation/filter bus can be less than 1.0.


Copyright © 1997 IEEE. All rights reserved.
Copyright The Institute of Electrical and Electronics Engineers, Inc.
Provided by IHS under license with IEEE
No reproduction or networking permitted without license from IHS
Not for Resale

The ac voltage and reactive requirements necessitate filters/capacitors of up to 150 Mvar (1.0 pu), switchable in six steps. To limit TOV, permanently connected surge arresters of high-energy capability are provided to supplement the special converter controls for limiting TOVs, e.g., following load rejection. The low ESCR required the inverter control scheme to control dc voltage rather than to keep γ constant (i.e., variable γ control—see Part I: 3.2.3).

### 8.13.1 System strength

For economic reasons, reactive compensation elements and ac filters are connected to the tertiary buses of the converter transformers rather than to the ac system bus. Since the commutation process is now referred to the tertiary, the short-circuit ratios at both sides of the station are calculated at the tertiary buses and are lower as a result. The minimum SCR on the Saskatchewan side is 1.9. The needs for capacitor shunt compensation depends on the direction of power flow. The Saskatchewan ESCR is 1.2, when power is received, and 0.9 when power is delivered to Alberta.

From the perspective of the Saskatchewan side, the rated dc current is higher than that corresponding to MAP (see Part 1: 3.2.2). Consequently, the inverter control mode is constant dc voltage at a nominal γ of 25°, as discussed in general terms in Part I, 3.2.3. In the steady-state, γ is automatically maintained within ±1.5° of nominal by tap changing of the converter transformer: transiently, γ is permitted to reduce to the minimum setting of 17°.

In principle, on the Alberta side, the high SCR of 3.3, an ESCR of 2.6 for rectifier operation, and an ESCR of 2.8 for inverter operation would permit stable inverter control in the minimum γ mode at the rated dc current which is less than $I_{MAP}$. However, a constant voltage inverter control mode has again been selected. In this case, it decouples ac voltage variations on the Alberta side from disturbing the Saskatchewan ac bus. Tap changing maintains γ between 22.5° and 19°, with a transient minimum limit of 17°.

### 8.13.2 AC voltage control

The ac voltage on the Saskatchewan ac bus is controlled, in the steady-state, by switched shunt capacitors, reactors and filters which provide up to 150 Mvar in 6 steps. The continuous control of ac voltage on either side, by means of converter control, was precluded because corrections on one side would detrimentally affect the voltage on the other side. However, the converters are called on to exert fast reactive power control during transient conditions for limiting TOVs. High energy surge arresters are permanently connected to supplement this special control mode and to act as back-up in the event of control failure.

As demonstrated when the Empress substation on the Alberta side became supplied by a single 138 kV line, two 230 kV lines having tripped, the voltage sensitivity to reactive switching is dependent on the operating SCR. In order to avoid hunting in the switching of reactive power banks, a control modification was made: the amount of ac voltage change, which initiates switching, is increased during the contingency, and then is automatically reduced when conditions return to normal.

### 8.13.3 Power run-back

Further to the range of voltage control in 8.13.2, the dc controls apply power run-back to automatically reduce the dc power to 0.1 pu when the ac voltage falls below either 0.9 pu on the Alberta side or 0.85 pu on the Saskatchewan side. There is provision for initiation of power run-back remotely, possibly from a remote breaker trip.

### 8.13.4 Islanded operation

It is foreseen that a trip of the single Saskatchewan ac feed would create an islanding situation for the dc station on that side. A protective circuit will block the converters in this event. Until the protection operates, the

Copyright © 1997 IEEE. All rights reserved.

Copyright The Institute of Electrical and Electronics Engineers, Inc.
Provided by IHS under license with IEEE
No reproduction or networking permitted without license from IHS
Not for Resale

capability for commutation is expected to be maintained (as in 8.7.1), so that the ac voltage controls will continue to be effective.

### 8.13.5 Harmonic resonance

On the Saskatchewan side, as in other low and very low ESCR situations, there was a potential for low-order harmonic resonance—in this case at the second and third harmonics. Correction has been made by an additional control loop for the third harmonic. Adjustments to the phase-locked loop in the converter controls have made the controls immune to the second harmonic. Studies showed that, despite the relatively high ESCR on the Alberta side, there was a possibility of third harmonic resonance. It has been avoided by the installation of a third harmonic filter on the tertiary of the converter transformer.

### 8.13.6 Harmonic transfer

As a result of studies that showed that harmonic transfer between the two ac systems would not be excessive, the dc station operates without a smoothing reactor. The decision has some connection with the SCRs because it was concluded that the size of inductance, to significantly influence the harmonic transfer, would be detrimental to the speed of recovery from ac faults.


Copyright © 1997 IEEE. All rights reserved.
Copyright The Institute of Electrical and Electronics Engineers, Inc.
Provided by IHS under license with IEEE
No reproduction or networking permitted without license from IHS
Not for Resale

# Annex A

(informative)

# Bibliography

[B1] Adapa, R., and Reeve, J., "A new approach to dynamic analysis of ac networks incorporating detailed modeling of dc systems, Part II: Application to interaction of dc and weak ac systems," *IEEE Transactions on Power Delivery,* vol. PWRD-3, no. 4, pp. 2012–2019, Oct.1988.

[B2] Ainsworth, J. D., "Core-saturation instability in the Kingsnorth HVDC Link," *CIGRÉ SC 14,* Winnipeg, June 20–24, 1977.

[B3] "Basis of selection on HVDC for recent transmission projects in North America," Panel Session, *IEEE/PES T&D Exposition,* Apr. 1984.

[B4] Beard, C. A., et al., "Special system aspects of the Highgate HVDC Project," *Fourth International Conference on AC and DC Power Transmission*, IEE Publication 255, London, p. 417, 1985.

[B5] Burtnyk, V., "Reliability analysis of HVDC transmission," Power System Planning and Operation Section, *Canadian Electrical Association Spring Meeting,* Vancouver, Mar. 23, 1983.

[B6] Canelhas, A.P., Eriksson, K., and Pereira, M.P., "Low order harmonic ac filter transient stresses for unsymmetrical ac network faults," *Proceedings IEEE/CSEE International Conference on DC Power Transmission,* Montreal, pp. 160–163, June 1984.

[B7] Choudhry, M. A., and Carroll, D., "Coordinated active and reactive power modulation of multiterminal HVDC systems," *IEEE Transactions on Power Apparatus and Systems,* vol. PAS-103, pp. 1480–1485, June 1984.

[B8] *Compendium on HVDC Schemes Throughout the World,* CIGRÉ Technical Brochure no. 3, Edited by SC 14 WG 04, 1992.

[B9] de Laneuville, H., Torgerson, D. R., Weaver, T. L., Klenk, E., Koetschau, S. G., and Povh, D., "Advanced concepts and commissioning experiences with the Sidney Converter Station," CIGRÉ, Paris, Aug. 29–Sept. 2, 1988.

[B10] DeNomme, F., and Holt, D.L., "Operational aspects of the Des Cantons-Comerford HVDC link," Canadian Electrical Association, Vancouver, Mar. 1987.

[B11] Emarah, A. S., Choudhry, M. A., and Galanos, G. D., "Design of optimal modulation controllers for multi area ac/dc systems using Eigenvalue sensitivities," *IEEE Transactions on Power Systems,* vol. PWRS 2, no. 3, pp. 522–528, Aug. 1987.

[B12] EPRI EL-2708, "HVDC system control for damping of subsynchronous oscillations," Project 1425-1, Final Report, Oct. 1982.

[B13] EPRI EL-4365, "Methodology for the integration of HVDC links in large ac systems, Phase 2: advanced concepts," Project 1964-2, vol. 1, Apr. 1987.

Copyright © 1997 IEEE. All rights reserved.

Copyright The Institute of Electrical and Electronics Engineers, Inc.
Provided by IHS under license with IEEE
No reproduction or networking permitted without license from IHS
Not for Resale

[B14] Erche, M., Schraudolph, M., and Weibelzahl, M., "Reactive power control in ac/dc systems by HVDC converter stations," CIGRÉ Symposium on AC/DC Transmission Interactions and Comparisons, Paper 400-04, Boston, Sept. 28–30, 1987.

[B15] Flueckiger, D., Pfyl, W., Sadek, K., Huynh, H., and Granger, M., "Application and integrated performance aspects of static var system in connection with HVDC," *Proceedings of the International Conference on DC Transmission,* Montreal, pp. 171-177, June 1984.

[B16] "Forced Outage Performance of Transmission Equipment for the Period January 1, 1982, to December 31, 1986," Canadian Electrical Association Report, Mar. 1988.

[B17] Frontin, S. O., et al., "Complete disconnection of the Itaipu HVDC inverter station from the rest of the ac system—application of damping resistors," *Fourth International Conference on AC and DC Transmission, London,* IEE Publication no. 255, p. 400, 1985.

[B18] Gavrilovic, A., Krishnayya, P. C. S., Peixoto, C. A. O., Ainsworth, J. D., Bowels, J., Hammad, A. E., Liss G., Thio C. V., "Aspects of ac/dc system interation," *IEEE MONTECH '86 Conference on HVDC Power Transmission,* Montreal, pp. 35–38, Sept. 1986.

[B19] *Guidelines for the Application of Metal Oxide Arresters Without Gaps for HVDC Converter Stations,* CIGRÉ Technical Brochure no. 34, Edited by SC 33/14 WG 05, 1987.

[B20] Guimaraes, E.G., et al., "Insulation coordination and arrester protection of the Itaipu HVDC stations, Part I: Insulation coordination," CIGRÉ Study Committee 14, Rio de Janeiro, 1981.

[B21] Hammad, A. E., "Analysis of Second Harmonic Instability for Chatequguay HVDC/SVC Scheme," *IEEE Transactions on Power Delivery,* vol. 7, no. 1, Jan. 1992, pp. 410–415.

[B22] Hammad, A. E., Gagnon, G., and McCallum, D., "Improving the dynamic performance of a complex ac/dc system by HVDC control modifications," *IEEE Transactions on Power Delivery,* vol. 5, no. 4, pp. 1934–1943, Nov. 1990.

[B23] Hammad, A. E., and Kuhn, W., "A computation algorithm for assessing voltage stability at ac/dc interconnections," *IEEE Transactions on Power Systems,* vol. PWRS-1, no. 1, pp. 209–216, Feb. 1986.

[B24] Hardy, J. E., Turner, F. P. P., and Zimmerman, L. A., "AC or DC? One utility approach," *International Conference on Thyristor and Variable Static Equipment for AC and DC Transmission,* London, IEE Publication no. 205, pp. 241, Nov. 1981.

[B25] Hatziadoniu, C., Galanos, G. D., Milias-Argitis, J., and Zacharias, T., "Transient simulation of integrated ac/dc systems, Part II: System modeling and simulation," *IEEE Transactions on Power Systems,* vol. 3, no. 1, pp. 173–179, Feb. 1988.

[B26] Hingorani, N. G., Nilsson, S. L., Cresap, L., Pohl, R., and Grund, C. E., "Active and reactive power modulation of HVDC systems," *Proceedings of the IEEE Conference on Overvoltages and Compensation in Integrated AC/AC Systems,* Winnipeg, July 1980.

[B27] Hung, S. Y. M., et al., "Chateauguay dc interconnection between Quebec and the State of New York: studies and results," International Conference on Thyristor and Variable Static Equipment for AC and DC Transmission, IEE Publication no. 204, London, p. 247, Nov. 1981.

[B28] Johnson, R. K., Klemm, N. S., de Laneuville, H., Koetschau, S. G., and Wild, G., "Power modulation of Sidney HVDC scheme, Part 1: RAS control concept, realization and field tests," *IEEE Transactions on Power Delivery,* vol. 4, no. 4, pp. 2153-2161, Oct. 1989.



Copyright © 1997 IEEE. All rights reserved.
Copyright The Institute of Electrical and Electronics Engineers, Inc.
Provided by IHS under license with IEEE
No reproduction or networking permitted without license from IHS
Not for Resale

[B29] Johnson, R. K., Klemm, N. S., Schilling, K. H., and Thumm, G., "Power modulation of Sidney HVDC scheme, Part 2: Computer simulation," *IEEE Transactions on Power Delivery,* vol. 4, no. 4, pp. 2153-2161, October 1989.

[B30] Kanngiesser, K.W., and Ring, H., "Dynamic behavior of a series-connected HVDC tapping substation connected to a weak ac system," *Fourth International Conference on AC and DC Power Transmission,* IEE Publication no. 255, London, p. 405, 1985.

[B31] Kaufhold, W., Peters, H. and Povh, D., "Control of temporary overvoltages in ac/dc systems by metal-oxide overvoltage limiter," CIGRÉ Symposium on AC/DC Transmission Interactions and Comparisons, Paper 200-12, Boston, Sept. 28–30, 1987.

[B32] Klenk, E., et al., "Advanced concepts and commissioning experiences with the Sidney Converter Station," CIGRÉ, paper 14.10, 1988.

[B33] Kolodzief, E., Breuer, G. D., and Hingorani, N. G., "Walker County—STP HVDC project design studies and solutions," *Fourth International Conference on AC and DC Transmission,* London, IEE Publication no. 255, p. 423, 1985.

[B34] Krishnayya, P. C. S., Lefebvre, S., Sood, V. K. and Balu, N. J., "Simulator study of multiterminal HVDC system with small parallel tap and weak ac system," *IEEE Transactions on Power Apparatus and Systems,* vol. PAS-103, no. 10, pp. 3125–3132, Oct. 1984.

[B35] Krishnayya, P. C. S., Piwko, R. J., Weaver, T. L., Bahrman, M. P., and Hammad, A. E., "DC transmission terminating at low short-circuit ratio locations," *IEEE Transactions on Power Delivery,* vol. PWRD-1, no. 3, pp. 308–318, July 1986.

[B36] Kuruganty, P. R. S., and Woodford, D. A., "Multiterminal HVDC transmission system reliability evaluation," *Proceedings of the 4th Inter-Ram Conference for the Electric Power Industry,* p. 605, 1987.

[B37] Kuruganty, P. R. S., and Woodford, D. A., "A reliability cost-benefit analysis for HVDC transmission expansion planning," *IEEE Transactions on Power Delivery,* vol. PWRD-3, no. 3, pp. 1241–1248, July 1988.

[B38] Lauby, M.G., et al., "MAPP bulk transmission outage data collection and analysis," *IEEE Transactions on Power Apparatus and Systems,* vol. PAS-103, no. 1, pp. 213–221, Jan. 1984.

[B39] Liss, G., and Smedsfelt, S., "HVDC links for connection to isolated ac networks," *United Nations Seminar on High Voltage Direct Current Techniques,* Stockholm, 6–9 May 1985.

[B40] Lochner, G., and Daehler, P., "HVDC back-to-back intertie with long transmission feeding a relatively weak ac system," *International Conference on Thyristor and Static Equipment for AC and DC Transmission,* London, IEE Publication no. 205, p. 204, 1981.

[B41] McConnach, J. S., Neudorf, E. G., Lee, J. J. Y., and Hamoud, G., "Comparison of ac and dc transmission alternative for new east-west interconnection in Ontario," *CIGRÉ Symposium on AC/DC Transmission Interactions and Comparisons,* Boston, Paper 500-07, Sept. 1987.

[B42] Milias-Argitis, J., Zacharias, T., Hatziadoniu, C., and Galanos, G. D., "Transient simulation of integrated ac/dc systems, Part I: Converter and simulation," *IEEE Transactions on Power Systems,* vol. PAS-3, no. 1, pp. 166–172, Feb. 1988.

[B43] Ni, Y., and Fouad, A. A., "A simplified two-terminal HVDC model and its use in direct transient stability assessment," *IEEE Transactions on Power Systems,* vol. PWRS-2, no. 4, pp. 1006–1012, Nov. 1987.

Copyright © 1997 IEEE. All rights reserved.

Copyright The Institute of Electrical and Electronics Engineers, Inc.
Provided by IHS under license with IEEE
No reproduction or networking permitted without license from IHS
Not for Resale

[B44] Nyati, S., et al., "Comparison of voltage control devices at converter stations connected to weak ac systems," *IEEE Transactions on Power Delivery,* vol PAS-3, no. 2, pp. 684–693, Apr. 1988.

[B45] Nyati, S. et al., "Effectiveness of var controllers connected at the converter bus of an HVDC link feeding into a weak ac system," *Fourth International Conference on AC and DC Power Transmission,* IEE Publication no. 255, London, p. 411, 1985.

[B46] Nyati, S. et al., "Influence of various factors on recovery performance of a dc system feeding into a weak ac system," *IEEE MONTECH '86 Conference on HVDC Power Transmission,* Montreal, IEEE Publication TH0154-5, p. 135, Sept. 1986.

[B47] Peixoto, C. A. O., "Itaipu 6300 MW HVDC Transmission System—feasibility and planning aspects," *Symposium on Incorporating HVDC Power Transmission into System Planning,* Phoenix, Mar. 1980.

[B48] Peixoto, C. A. O., "Some planning aspects of ac/dc interaction of high impedance systems," CIGRÉ, TF 14.07, Oct. 1989.

[B49] Peixoto, C.A.O., Jardini, J. A., Clarke, C. D., and Mountford, J. D., "Simulator and digital studies on var compensation for the Itaipu HVDC Transmission System," *IEEE Conference on Overvoltages and Compensation on Integrated AC/DC Systems,* Winnipeg, July 1980.

[B50] Piwko, R. J., Nozari, F., Hauth, R. L., and Flairty, C. W., "Control systems for application in HVDC terminals at ac system locations having low short-circuit capacities," *IEEE MONTECH '86 Conference on HVDC Power Transmission,* Montreal, Sept. 1986.

[B51] Porangaba, H. et al., "Itaipu HVDC Transmission System—stability studies for a weak ac receiving system," *IEEE MONTECH '86 Conference on HVDC Power Transmission,* Montreal, Sept. 1986.

[B52] Praca, A. A. S., et al., "Dynamic performance of the 60 Hz ac interconnected system and the ±600 kV dc link after the operation of the two first 60 Hz Itaipu units," *HVDC System Operating Conference,* Winnipeg, Sept. 1987.

[B53] Prasad, M., Prasher, V. K., Roy, A. K., and Kaul, N., "Vindhyachal HVDC Project: HVDC control design for improved system stability," *CIGRÉ Symposium on AC/DC Transmission, Interactions and Comparisons,* Boston, Paper no. 300-12, Sept. 1987.

[B54] "Protocol for reporting the operational performance of dc schemes," CIGRÉ WG 14.04 Report (adopted by Study Committee 14), Recife, 1989.

[B55] Reeve, J., and Chen, S. P., "Digital simulation of a multiterminal HVDC transmission system," *IEEE Transactions on Power Apparatus and Systems,* vol. PAS-103, no. 12, pp. 3634-42, Dec. 1984.

[B56] Reeve, J., and Lane-Smith, S.P., "Integration of real-time controls and computer programs for simulation of direct current transmission," *IEEE Transactions on Power Delivery,* vol. PWRD-5, no. 4, pp. 2047-2053, Oct. 1990.

[B57] Reeve, J., and Sultan, M., "Gain scheduling adaptive control strategies for HVDC systems to accommodate large disturbances," *IEEE PES Winter Meeting,* Columbus, 93 WM 161-0 PWRS, Feb. 1993.

[B58] Reeve, J., and Sultan, M., "Robust adaptive control of HVDC systems," *IEEE PES Summer Meeting,* Vancouver, 93 SM 444-0-PWRD, July 1993.



--`,,`,,`-`-`,,`,,`,`,,`---
Copyright © 1997 IEEE. All rights reserved.
Copyright The Institute of Electrical and Electronics Engineers, Inc.
Provided by IHS under license with IEEE
No reproduction or networking permitted without license from IHS
Not for Resale

[B59] Rosenqvist, R., Ekehov, B., Prasad, M., and Gupta, A., "Dynamic performance study for the Vindhyachal Back-to-Back HVDC Station," CIGRÉ Symposium on AC/DC Transmission Interactions and Comparisons, Paper 300-03, Boston, Sept. 28–30, 1987.

[B60] Rowe, B. A., and Brewer, G. L., "Response of the 2000 MW Cross Channel HVDC Link to major disturbances," CIGRÉ, Paper no. 14-08, 1988.

[B61] Stemmler, H., "HVDC back-to back interties on weak ac systems, second harmonic problems analysis and solutions," *CIGRÉ Symposium on AC/DC Transmission Interactions and Comparison,* Boston, Paper no. 300-08, 1987.

[B62] Szechtman, M., Ping, W. W., Salgado, E., and Bowles, J. P., "Unconventional HVDC control techniques for stabilization of a weak power system," *IEEE Transactions on Power Apparatus and Systems,* vol. PAS-103, pp. 2244–2248, Aug. 1984.

[B63] Thio, C. V., and Davies, J. B., "New synchronous compensators for the Nelson River HVDC system—planning requirements and specification," *IEEE Transactions on Power Delivery,* vol. PAS-6, no. 2, pp. 922–928, Apr. 1991.

[B64] Vovos, N. A., and Galanos, G. D., "Enhancement of the transient stability of integrated ac/dc systems using active and reactive power modulation," *IEEE Transactions on Power Apparatus and Systems,* vol. PAS-104, no. 7, pp. 1696–1702, July 1985.

[B65] Woodford, D. A., "Validation of digital simulation of dc links," *IEEE Transactions on Power Apparatus and Systems,* vol. PAS-104, no. 9, pp. 2588–2595, Sept. 1985.

Copyright © 1997 IEEE. All rights reserved.

Copyright The Institute of Electrical and Electronics Engineers, Inc.
Provided by IHS under license with IEEE
No reproduction or networking permitted without license from IHS
Not for Resale