IEEE Guide for Control of Small Hydroelectric Power Plants

Sponsor
Energy Development and Power Generation Committee
of the
IEEE Power Engineering Society

Approved March 10, 1988

IEEE Standards Board

©Copyright 1988 by

The Institute of Electrical and Electronics Engineers, Inc 345 East 47th Street, New York, NY 10017, USA

No part of this publication may be reproduced in any form, in an electronic retrieval system or otherwise, without the prior written permission of the publisher.

Copyright The Institute of Electrical and Electronics Engineers, Inc.
Provided by IHS under license with IEEE
No reproduction or networking permitted without license from IHS

Not for Resale

IEEE Standards documents are developed within the Technical Committees of the IEEE Societies and the Standards Coordinating Committees of the IEEE Standards Board. Members of the committees serve voluntarily and without compensation. They are not necessarily members of the Institute. The standards developed within IEEE represent a consensus of the broad expertise on the subject within the Institute as well as those activities outside of IEEE which have expressed an interest in participating in the development of the standard.

Use of an IEEE Standard is wholly voluntary. The existence of an IEEE Standard does not imply that there are no other ways to produce, test, measure, purchase, market, or provide other goods and services related to the scope of the IEEE Standard. Furthermore, the viewpoint expressed at the time a standard is approved and issued is subject to change brought about through developments in the state of the art and comments received from users of the standard. Every IEEE Standard is subjected to review at least every five years for revision or reaffirmation. When a document is more than five years old, and has not been reaffirmed, it is reasonable to conclude that its contents, although still of some value, do not wholly reflect the present state of the art. Users are cautioned to check to determine that they have the latest edition of any IEEE Standard.

Comments for revision of IEEE Standards are welcome from any interested party, regardless of membership affiliation with IEEE. Suggestions for changes in documents should be in the form of a proposed change of text, together with appropriate supporting comments.

Interpretations: Occasionally questions may arise regarding the meaning of portions of standards as they relate to specific applications. When the need for interpretations is brought to the attention of IEEE, the Institute will initiate action to prepare appropriate responses. Since IEEE Standards represent a consensus of all concerned interests, it is important to ensure that any interpretation has also received the concurrence of a balance of interests. For this reason IEEE and the members of its technical committees are not able to provide an instant response to interpretation requests except in those cases where the matter has previously received formal consideration.

Comments on standards and requests for interpretations should be addressed to:

Secretary, IEEE Standards Board
345 East 47th Street
New York, NY 10017
USA

IEEE Standards documents are adopted by the Institute of Electrical and Electronics Engineers without regard to whether their adoption may involve patents on articles, materials, or processes. Such adoption does not assume any liability to any patent owner, nor does it assume any obligation whatever to parties adopting the standards documents.

Copyright The Institute of Electrical and Electronics Engineers, Inc.
Provided by IHS under license with IEEE
No reproduction or networking permitted without license from IHS
Not for Resale

Foreword

(This Foreword is not a part of IEEE Std 1020-1988, IEEE Guide for Control of Small Hydroelectric Power Plants.)

Initially this document was planned to be a recommended guide strictly for the application of control systems to small hydroelectric power plants, one type of dispersed generation source. As work progressed, however, it was seen that such a guide would be lacking in depth if some treatment of the controlled electrical and mechanical systems and equipment were not made. For completeness, it was considered desirable to also mention salient civil features of small hydroelectric projects, and to offer discussion of equipment protection and operation.

The end result of this effort, although termed a guide to control of small hydroelectric power plants, is basically a tutorial document that presents descriptive information for use in planning the control system design and operation of small hydroelectric power plants. It is intended to provide a working knowledge of the terminology used in this field and an understanding of the principles of operation of hydroelectric generating units. It addresses the control requirements from an electrical standpoint. It does not discuss in any great detail the civil, hydraulic, and mechanical considerations that must also be taken into account when planning a hydroelectric project. It deliberately omits discussion of topics such as economics, environmental factors, financing, and licensing.

This document was prepared by a Task Force of the Working Group on Hydro Plant Controls of the Hydroelectric Power Subcommittee of the IEEE Energy Development and Power Generation Committee. Members of this Task Force represent a cross-section of the hydroelectric power industry, including power plant owners, designers, and equipment manufacturers. The persons listed below were members of the Task Force when the Guide was finalized and submitted for balloting.

E. T. Voelker, *Chair*
R. E. Howell, *Vice Chair*

S. R. Brockschink
H. Butz
H. E. Church, Jr.
H. R. Davis
C. R. Desrosiers
P. F. Garcia
J. H. Gurney
J. H. Jones
R. F. Karlicek
D. L. Kornegay
J. E. LeClair
P. Micale
D. R. McCabe
W. R. Moon
G. D. Osburn
L. Pereira
B. J. Polk
J. Quinn
D. Seely
B. Zarlenga

The persons listed below also contributed to the preparation of this Guide.

R. W. Beckwith
C. G. Bickerdike
P. G. Brown
R. S. Coleman
Y. Cote
L. E. Felton
Y. Fukuda
G. Grinnell
J. A. Meuleman
W. O. Moll
W. I. Pentin
O. H. Smith
W. A. Stewart
J. Thomas
A. A. Tseng
E. C. Whitney

--`,,`-`-`,,`,,`,`,,`---
Copyright The Institute of Electrical and Electronics Engineers, Inc.
Provided by IHS under license with IEEE
No reproduction or networking permitted without license from IHS
Not for Resale

The following persons were on the balloting committee that approved this document for submission to the IEEE Standards Board:

M. S. Baldwin
I. B. Berezowsky
L. D. Boydstun
S. R. Brockschink
J. B. Cannon
R. W. Cantrell
R. L. Castleberry
E. F. Chelotti
R. E. Cotta
P. M. Davidson
D. Diamant
G. Engmann
D. I. Gorden
R. K. Gupta
J. H. Jones
C. E. Kneeburg
S. B. Kuznetsov
P. Landrieu
J. E. LeClair
P. A. Lewis
J. T. Madill
O. S. Mazzoni
D. R. McCabe
G. R. Meloy
M. W. Migliaro
R. E. Penn, III
C. R. Pope
R. J. Reiman
D. E. Roberts
E. P. Rothong
J. E. Stoner, Jr.
T. R. Whittemore
R. Zweigler

Copyright The Institute of Electrical and Electronics Engineers, Inc.
Provided by IHS under license with IEEE
No reproduction or networking permitted without license from IHS
Not for Resale

When the IEEE Standards Board approved this standard on March 10, 1988, it had the following membership:

Donald C. Fleckenstein, *Chair*
Marco Migliaro, *Vice Chair*
Andrew G. Salem, *Secretary*

Arthur A. Blaisdell
Fletcher J. Buckley
James M. Daly
Stephen R. Dillon
Eugene P. Fogarty
Thomas L. Hannan
Kenneth D. Hendrix
Theodore W. Hissey, Jr.
Jack M. Kinn
Frank D. Kirschner
Frank C. Kitzantides
Joseph L. Koepfinger*
Irving Kolodny
Edward Lohse
John E. May, Jr.
Lawrence V. McCall
L. Bruce McClung
Richard E. Mosher
L. John Rankine
Gary S. Robinson
Frank L. Rose
Helen M. Wood
Karl H. Zaininger
Donald W. Zipse

*Member Emeritus

Copyright The Institute of Electrical and Electronics Engineers, Inc.
Provided by IHS under license with IEEE
No reproduction or networking permitted without license from IHS
Not for Resale

1. Scope 1

1.1 Purpose 1
1.2 Basic Definition 1

2. Definitions 2

3. Introduction 4

3.1 General 4
3.2 Project Evaluation 7

4. Equipment 9

4.1 General 9
4.2 Major Equipment 9
4.3 Mechanical Auxiliary Systems 13

5. Station Service Electrical System 13

5.1 General 13
5.2 Plants With Single Auxiliary Supply 14
5.3 Plants Utilizing Multiple Auxiliary Supplies 16

6. Protection 18

6.1 General 18
6.2 Malfunction Considerations 19
6.3 Devices Used in a Typical Protection System 20

7. Control 25

7.1 General 25
7.2 Unit control 25
7.3 Connecting Generator Units to the System 29
7.4 Local and Off-Site Control and Instrumentation 30
7.5 Communication Links 32

8. Operation 32

8.1 General 32
8.2 Waterway Operation 32
8.3 Project Interface With the Waterway System 33
8.4 Electrical System Operation 33
8.5 Project Interface With the Electrical System 33

9. Bibliography 34

 Copyright © 1998 IEEE All Rights Reserved

Copyright The Institute of Electrical and Electronics Engineers, Inc.
Provided by IHS under license with IEEE
No reproduction or networking permitted without license from IHS Not for Resale

IEEE Guide for Control of Small Hydroelectric Power Plants

1. Scope

1.1 Purpose

This guide presents descriptive material intended to assist in the planning for design, development, and operation of small hydroelectric power plant control systems. It does not purport to cover every possible variation that may be encountered, but it should suffice to impart a working familiarity with the terminology and principles involved.

1.2 Basic Definition

The term “small hydroelectric power plants” does not lend itself to rigorous definition since small physical size is not necessarily synonymous with small (low) unit output ratings. For example, low head installations require physically much larger turbine equipment to develop the same output as would be the case for high head installations. Small hydro (hydroelectric) power plants, for the purposes of this guide, have the following general attributes:

1.2.1 Unit Ratings

Output ratings are considered to range from 100 kW to approximately 5 000 kW, and generated voltages from 480 V to 13 800 V. “Mini” or “micro” units, as those with outputs less than 100 kW are often called, generally have fewer control requirements. Units with outputs greater than 5 000 kW frequently require or justify more extensive control and protection than is discussed in this guide.

1.2.2 Unit Type

Small hydro turbines may be of any of the types commercially available, including pumps operated as turbines, but excluding reversible pump-turbines. Almost exclusively, small hydro generators are of the alternating current type and may be either synchronous or induction type. Usually, small hydro units are expected to require a minimum amount of field assembly and installation work, so this would tend to rule out very slow-speed, large-diameter units such as those with split generator stators that require final winding assembly in the field.

Copyright © 1988 IEEE All Rights Reserved

Copyright The Institute of Electrical and Electronics Engineers, Inc.
Provided by IHS under license with IEEE
No reproduction or networking permitted without license from IHS
Not for Resale

1.2.3 Application

Small hydro units are commonly applied in situations where associated civil construction work and costs are minimal. These applications include installations at existing dams, pipelines, canals, or at new impoundment structures that can be inexpensively built.

1.2.4 Operation and Control

Almost universally, small hydro units are provided with equipment and circuitry to enable unattended operation.

1.2.5 Interconnection

Small hydro units are generally connected to the local power company system, and are connected either directly or through a main transformer, frequently at a distribution substation, or tapped into a distribution circuit. The unit may supply a portion, or all, of its output to a local private load, and any surplus may be marketed to the power company. Special interconnection requirements are set by each power company to protect its equipment, system, and personnel. Privately owned generator installations are required to meet ANSI/NFPA 70-1987, National Electrical Code, Article 705, "Interconnected Electric Power Production Sources" [1].[1]

2. Definitions

Definitions provided here reflect industry common usage as related to small hydroelectric power plants, and may not in all instances be in accordance with ANSI/IEEE Std 100-1988, Dictionary of Electrical and Electronics Terms [2] or other standards. For more rigorous definitions, or for definitions not covered herein, the reader is referred to the IEEE Dictionary and appropriate standards.

accumulator: Container that stores hydraulic oil under pressure as a source of fluid energy.

axial flow: Used to describe any turbine, such as a propeller type with an inlet that directs the water axially toward the runner, as contrasted with radial entry to the runner.

brushless exciter: Direct-connected ac generator with shaft-mounted rotating rectifiers and without a commutator and brushes.

bulb unit: Propeller turbine and generator, with the generator in a bulbous enclosure in the water passageway.

NOTE — The term "bulb turbine" has no meaning.

bus: A conductor or group of electrical conductors serving as common connections between circuits, generally in the form of insulated cable, rigid rectangular or round bars, or stranded overhead cables held under tension.

bypass: A means to pass the flow of water around a turbine to the same discharge outlet.

capacity: Maximum output of a turbine generator unit.

cavitation: With respect to an operating hydraulic turbine, cavitation is the formation of vapor-filled bubbles in high velocity, low pressure regions of the water passage—for example, around the turbine runner. The rapid collapse of the bubbles as they are propelled out of the low pressure region produces a pressure wave, which can erode nearby material.

circuit breaker: Fast-acting switching device used to close and open an electric circuit and capable of interruption of fault currents.

contactor: A device used for repetitive opening and closing operation of an electric circuit, and which has load current interrupting capability. It has no fault-current interrupting capability.

[1]The numbers in brackets correspond to the numbers in the Bibliography in Sec 9.

Copyright © 1988 IEEE All Rights Reserved

Copyright The Institute of Electrical and Electronics Engineers, Inc.
Provided by IHS under license with IEEE
No reproduction or networking permitted without license from IHS Not for Resale

discharge: Water flow, exiting from a turbine. It is generally measured in cubic feet per second or cubic meters per second.

drawout circuit breaker: Circuit breaker equipped with slides or rollers and quick disconnect means to facilitate removal and replacement.

excitation: A source of direct current for the synchronous generator field.

field flashing: Short-time application of an external direct current source to the field of a synchronous generator to enable it to build up its voltage and become self-excited.

flow: Water movement in a stream or conduit. It is generally measured in cubic feet per second or cubic meters per second.

flow-duration curve: Graphical representation that shows how stream flow has varied historically.

Francis turbine: Reaction type turbine in which the water enters radially and leaves axially.

governor: A system which controls speed and power output of a turbine.

grid: Network, usually of a power company, for transmitting and distributing electric power.

ground: Connection to earth or to a common conducting body that serves in place of the earth.

hardwired: Wired interconnections of relays and other control devices.

head: The difference in hydraulic energy between two points, which includes the elevation head, pressure head, and velocity head.

headwater: Source of energy for a hydraulic turbine.

headloss: Loss of potential energy mainly due to hydraulic friction. This loss is usually expressed in feet or meters of head.

impulse turbine: A turbine that uses nozzles to convert water pressure into kinetic energy at atmospheric pressure to develop power.

induction generator: A generator that produces power with rotor speeds slightly higher than synchronous speed. It does not have the rotor field excitation requirement of synchronous generators.

interlock: Device that permits equipment or controls to operate only after other conditions have been fulfilled.

inverter: Equipment that converts direct current to alternating current.

isolating switch: Device used to isolate plant electrical equipment from the rest of the circuit.

load controller: Auxiliary control device that adjusts turbine flow in response to plant output requirements.

lock-out relay: An electrically or manually reset auxiliary relay whose function is to hold associated devices inoperative until the relay is reset.

logic: (Control or relay logic.) Predetermined sequence of operation of relays and other control devices.

motoring: An induction or synchronous generator operating as a motor and drawing power from the grid.

neutral: Common point of a star-connected generator or transformer winding.

overspeed: Any speed in excess of rated speed.

power factor: Ratio of real to total apparent power (kW/kVA) expressed as a decimal or percent.

power factor correction capacitor: Device that provides a capacitive load to offset the demand for lagging reactive power.

programmable controller: Solid state control system with programming capability that performs functions similar to a relay logic system.

propeller turbine: A reaction turbine with fixed or variable pitch propeller-type blades.

Copyright © 1988 IEEE All Rights Reserved

Copyright The Institute of Electrical and Electronics Engineers, Inc.
Provided by IHS under license with IEEE
No reproduction or networking permitted without license from IHS Not for Resale

reaction turbine: A turbine that uses the velocity and pressure of the water flowing through the runner to develop power.

reactive power: Power that is in quadrature with real power, such as used by capacitive or inductive loads, expressed in kvar.

runaway speed: The maximum speed obtained when a turbine-generator is operated unloaded with wicket gates fully open at maximum head.

runner: The rotating element of a turbine, which converts hydraulic energy into mechanical energy.

run-of-river plant: One utilizing stream flow as it occurs and with little or no storage at the project site.

servomotor: An actuating device used to position turbine wicket gates, runner blades, deflectors, or other turbine control devices.

shear pin: Replaceable protective device that fails by shearing when an obstruction prevents a wicket gate from closing.

sluice: Open water trough, also used to describe operation of a turbine when operated under free discharge conditions to release flood flows.

spillway: Section of dam, or structure near dam, for flow of excess water.

static exciter: Nonrotating source of directcurrent for the synchronous generator field, utilizing controlled rectifiers.

switchgear: An assembly of equipment used to switch and control electrical power.

synchronizing: Process of paralleling and connecting a synchronous generator to another source.

synchronous generator: A generator that produces power with rotor speed exactly proportional to the frequency of the system. The generator has field poles excited by direct current.

tailrace: The exit channel of water from the powerhouse.

tailwater: The water in the tailrace.

wicket gates: Series of overlapping adjustable guide vanes that regulate the amount of water flowing through a reaction turbine.

3. Introduction

3.1 General

Prospective applications for small hydro projects occur wherever water or other liquid flow and head exist. The majority of sites will utilize the head developed by fresh water. The head developed by other fluids, such as salt water or treated sewage outflows, can be utilized under appropriate conditions.

The generating unit may have its shaft vertical, horizontal, or inclined, with the type selected to suit the site's physical conditions. A typical vertical shaft Francis turbine generating unit is shown in Fig 1, and a horizontal shaft propeller turbine unit in Fig 2. Other possible configurations include horizontal Francis turbine units and vertical propeller turbine units. The figures illustrate the interrelationships between the equipment and control systems. The equipment required for a specific installation will depend upon the operational requirements of the project. Major auxiliary equipment descriptions are included in later sections of this guide. In general, there are no major differences in the type of control equipment required for vertical versus horizontal units.

Copyright © 1988 IEEE All Rights Reserved

Copyright The Institute of Electrical and Electronics Engineers, Inc.
Provided by IHS under license with IEEE
No reproduction or networking permitted without license from IHS
Not for Resale

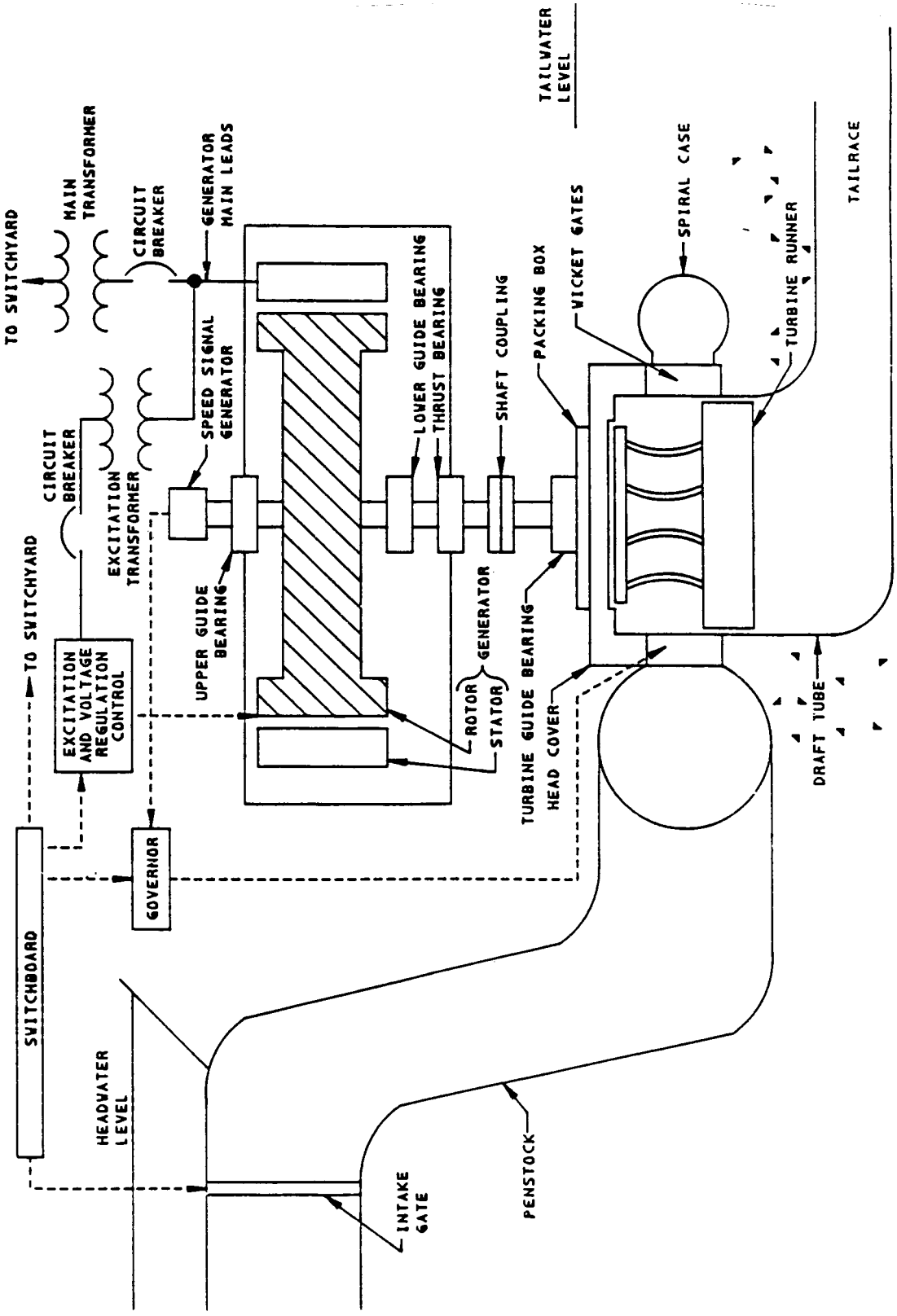

Figure 1—Vertical Francis Unit Arrangement

Copyright © 1988 IEEE All Rights Reserved

Copyright The Institute of Electrical and Electronics Engineers, Inc.
Provided by IHS under license with IEEE
No reproduction or networking permitted without license from IHS
Not for Resale

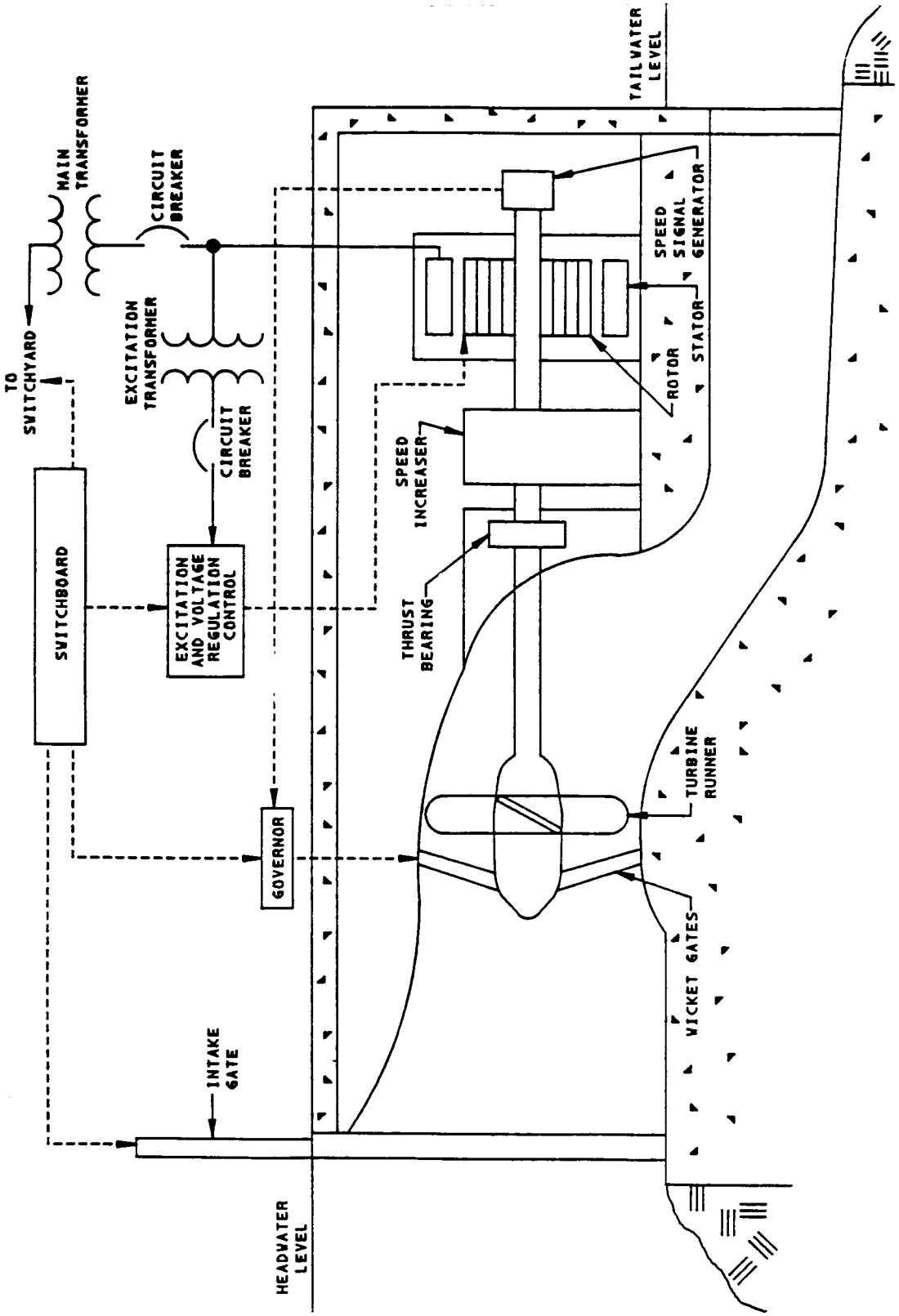

Figure 2—Horizontal Axial-Flow Unit Arrangement

Copyright © 1988 IEEE All Rights Reserved

Copyright The Institute of Electrical and Electronics Engineers, Inc.
Provided by IHS under license with IEEE
No reproduction or networking permitted without license from IHS
Not for Resale

3.2 Project Evaluation

Various data pertaining to the project being considered must be obtained to determine its feasibility. Items to be considered when evaluating project feasibility include physical site characteristics, head and flow data, size, quantity, and type of units.

3.2.1 Site Characteristics

Site characteristics fall into these broad categories: (1) new sites, (2) developed sites, and (3) working sites.

New sites are those that do not have any existing facilities for addition, modification or rehabilitation. A new site will require extensive civil construction for a dam, water conduits, spillway, powerhouse and other facilities.

Developed sites already have significant structures that can be added to or reworked to accommodate installation of generating equipment. Developed sites could include abandoned powerhouses, existing dams, and waterways associated with irrigation, flood control, recreation, water supply, or sewage outflows.

Working sites have functional generating units in place, and may or may not have provisions for conventional installation of additional small units.

3.2.2 Flow Data

Available flow and head will determine the power and energy that can be obtained from the proposed installation. Available flow and head may be influenced by external requirements to also meet irrigation needs, maintain minimum downstream releases, or to cause minimal impact on a water supply system. Historical water head and flow data on the drainage area upstream of the site can often be obtained from appropriate government agencies. Daily flow variations as well as seasonal variations need to be studied. Historical and projected maximum (flood) and minimum (drought) flows will impact not only on generation capabilities, but also on design of the dam and spillway structures. From the raw flow data, flow duration curves similar to the one in Fig 3 are plotted. These curves will indicate the percentage of time, over the long term, that a specified flow will be equalled or exceeded. By using this curve together with the head and proposed pondage (the working storage over days or weeks) available at the sites, an estimation can be made of available energy on an annual basis. The variations in head that occur with varying flow need to be considered in making this estimation.

Copyright © 1988 IEEE All Rights Reserved

Copyright The Institute of Electrical and Electronics Engineers, Inc.
Provided by IHS under license with IEEE
No reproduction or networking permitted without license from IHS Not for Resale

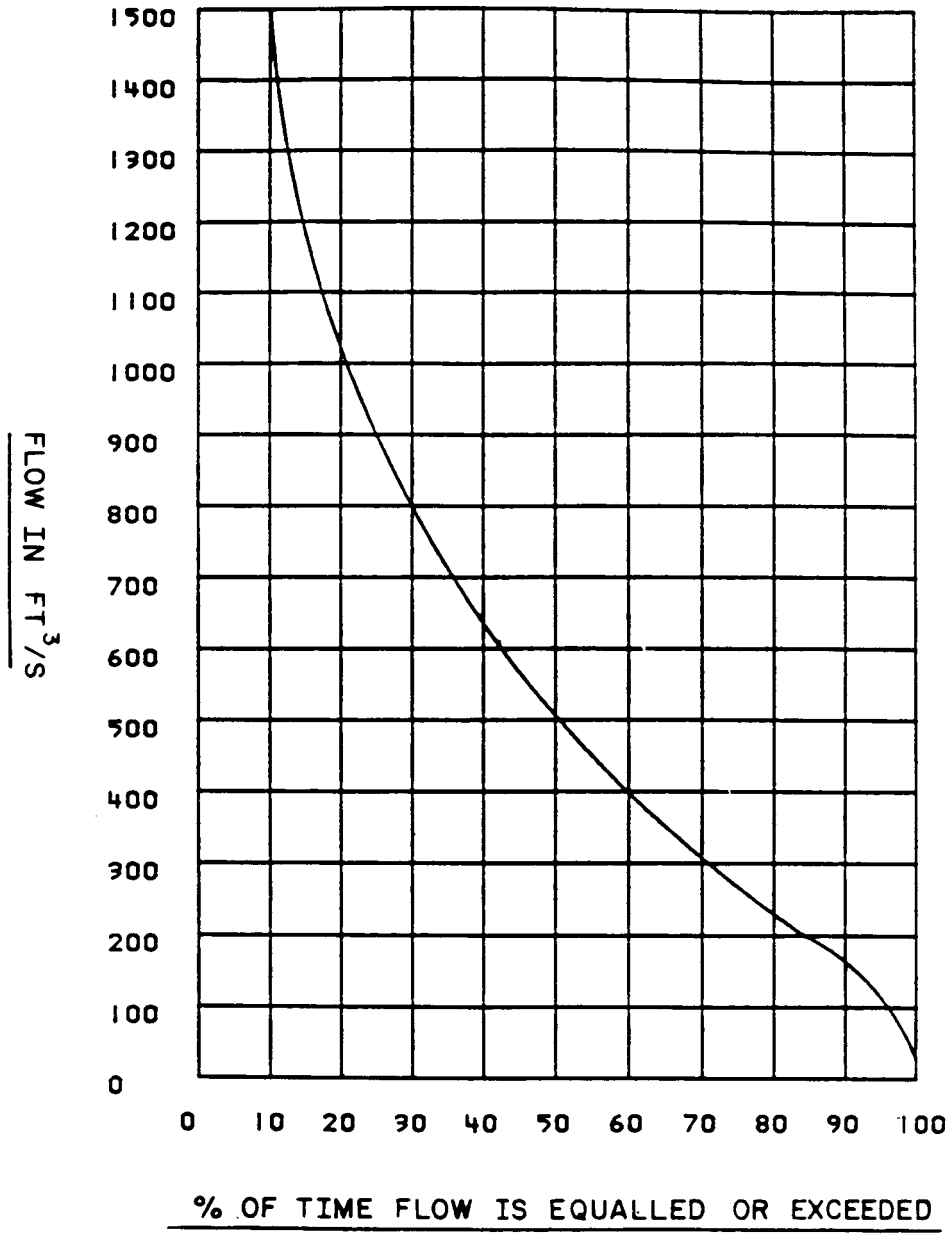

Figure 3—Example of Flow Duration Curve

3.2.3 Unit Ratings and Quantity

Application of engineering judgment and economic considerations to the flow duration curve and available pondage will yield an estimation of the size and quantity of units appropriate to the site. A single larger unit, which may be economically advantageous from an installed cost standpoint, may not have adequate low water flow capabilities and therefore cannot be operated during low flow seasons. Two or more smaller units can more effectively utilize lower flows, but installed costs may be higher than for a single larger unit. Units of different sizes may be installed at a site to make more effective use of available flows. Application of standardized or previously available turbine designs are frequently utilized to achieve lower plant costs.

Copyright © 1988 IEEE All Rights Reserved

Copyright The Institute of Electrical and Electronics Engineers, Inc.
Provided by IHS under license with IEEE
No reproduction or networking permitted without license from IHS Not for Resale

3.2.4 Interconnection for Power and Control

Important to the feasibility of the small hydro plant is the connection of the plant's output to the utility system. Depending on the site characteristics, new substation equipment and distribution lines may be required. Site characteristics may also require new communication facilities for control and monitoring of the hydroelectric plant from a remote location.

4. Equipment

4.1 General

Equipment for a hydroelectric plant can be divided into two classes: major and ancilliary. Major equipment includes those items directly involved with the production and transmission of power, such as the turbine, turbine speed and load controller, generator, exciter, speed increaser, switchgear, and transformer. Ancilliary equipment is that which supports the major equipment, and includes such items as mechanical auxiliary systems, unit control, and protection systems, as well as the station service electrical system. The mechanical auxiliary equipment is discussed in 4.3, the station service system is described in Sec 5, the protection system is described in Sec 6, and the control system is described in Sec 7.

4.2 Major Equipment

4.2.1 Turbine

The turbine converts the potential and kinetic energies available in the water column into mechanical energy to drive a generator, which converts the mechanical energy into electrical energy. The head or effective water pressure at the turbine and the flow rate dictate the selection of the type of turbine suitable for use at the particular site. The head and rate of flow determine the capacity of the turbine.

Hydraulic turbines have two general classifications: reaction and impulse.

The two types of reaction turbines are propeller and Francis. Propeller turbines are available with both fixed blades and variable pitch blades. Both propeller and Francis turbines may be mounted either horizontally or vertically. Propeller turbines can also be slant mounted. Other specific arrangements of propeller turbine designs are tubular, bulb, and rim generator. The runner design principles, however, are the same.

Impulse turbines are classified as perpendicular jet (Pelton), diagonal jet (Turgo), or cross flow. Impulse turbines may be mounted horizontally or vertically.

4.2.1.1 Reaction Turbines

Propeller and Francis turbines are distinguished as follows:

1) Propeller Turbines. Propeller turbines are normally designed to operate effectively between approximately 8 ft (2.4 m) and 120 ft (36.6 m) of head. Propeller turbines may be operated using flow ranges from 30% to 115% of the design flow for adjustable blade units and 50% to 115% for fixed blade units. The approximate head range for satisfactory operation is from 55% to 140% of design head for adjustable blades and from 65% to 140% for fixed blades. In general, the peak turbine efficiency at rated head ranges from approximately 90% to 92%.
2) Francis Turbines. Francis turbines are normally designed to operate effectively between approximately 40 ft (12.2 m) and 800 ft (244 m) of head. Francis turbines may be operated over a range of flow from approximately 40% to 110% of design discharge. Below minimum design flow, vibration and power surges can occur. The approximate head range for operation is from 60% to 125% of design head. In general, the peak turbine efficiency at rated head ranges from approximately 90% to 92%.

Copyright © 1988 IEEE All Rights Reserved

Copyright The Institute of Electrical and Electronics Engineers, Inc.
Provided by IHS under license with IEEE
No reproduction or networking permitted without license from IHS Not for Resale

4.2.1.2 Impulse Turbines

Impulse turbines can be designed to operate effectively between approximately 200 ft (61 m) to 5 000 ft (1 524 m) below head. Impulse turbines may be operated efficiently over a range of flow from approximately 10% to 115% of rated flow. The head range for operation can be 45% to 145% of the design head. In general, peak turbine efficiencies at rated head for impulse turbines will be in the range of approximately 88% to 92%.

4.2.1.3 Design and Operating Considerations

Turbines may be protected from damage by using the following methods:

- Properly setting the runner with respect to tailwater elevation to minimize cavitation.
- Operating reaction turbines within their rated power range, or within the minimum and maximum head limits to minimize cavitation.
- Using trash racks upstream to limit the size of debris entering the turbine.
- Using corrosion and wear resistant materials to reduce the effects of abrasive and corrosive materials carried by water.
- Using shear pins to protect wicket gates in the event debris gets caught between them.
- Providing automatic and manual locking means on wicket gate servomotors to prevent movement while the unit is shut down.
- Anticipating problems relating to ice conditions.

4.2.2 Bearings

Reaction turbine driven units in all orientations require a thrust bearing to withstand the turbine runner axial forces. The thrust bearing for vertical and slant units must also carry all or part of the weight of the turbine and generator rotating parts. Guide bearings for all units are designed to withstand the radial forces imposed by the rotating parts. The guide bearings (sometimes referred to as support or pedestal bearings) for slant and horizontal units must also carry part or all of the weight of the turbine and generator rotating parts.

Impulse turbines do not produce axial thrust forces and consequently require thrust bearings only for carrying all or part of the rotating part weights in the vertical and slant configurations. Guide bearings for all units are designed to withstand the radial forces imposed by the rotating parts, including those resulting from unbalanced turbine jet operation. Guide (support or pedestal) bearings for slant and horizontal units also carry part or all of the rotating part weights.

Thrust bearings are oil-lubricated, either by self-pumping or by a high-pressure oil pump. Most often, a thrust bearing is supplied as a part of the generator, but it may be supplied as a part of the turbine. If a speed increaser is installed, the thrust bearing is supplied as part of it or the turbine.

Guide bearings in general are oil-lubricated and self-pumping, although some turbine guide bearing designs may require a circulating oil pump.

4.2.3 Speed Increaser

Direct-coupled, low speed, small capacity generators are more costly and have lower efficiencies than high speed generators. The choice to utilize a speed increaser is an economic decision. High-speed generators with a nominal speed of 720-1 200 r/min together with a speed increaser are less costly and more efficient than a slow-speed direct-connected generator. There will be increased losses and maintenance associated with use of a speed increaser. Speed increasers are usually used with horizontal shaft units.

Copyright © 1988 IEEE All Rights Reserved

Copyright The Institute of Electrical and Electronics Engineers, Inc.
Provided by IHS under license with IEEE
No reproduction or networking permitted without license from IHS Not for Resale

4.2.4 Turbine Control System

The turbine speed and load control system consists of control and actuating equipment required to regulate the flow of water through the turbines, and thereby regulate the speed of the unit and the power output of the connected generator.

For the control of speed (operation off-line or isolated) or generation, a system is needed to regulate gate position, blade angles, or nozzles, depending on the applied turbine type. For units that do not require speed or generation control, simple on-off devices such as intake gates or butterfly valves may be utilized.

For control of a small hydroelectric plant connected to the power grid, the control system operates as a positioner in response to some external command signals. For larger power plants, because of hydraulic or electrical system conditions, the control system may include a closed-loop control system (governor) because of hydraulic or electrical system interface requirements.

The turbine control system includes an actuator, which converts the external control signals to mechanical movement of the gate, valve, wicket gates, blades, or nozzles. Usually this is a hydraulic power unit, which includes an oil pump, pressure tank, actuating valve, and servomotor.

The governor senses unit speed, gate position, or power output to adjust the turbine control device for speed regulation or for adjusting power output.

4.2.5 Generator

Synchronous or induction generators are used to convert the mechanical energy output of the turbine into electrical energy. Economics and other considerations discussed will determine which type should be used for a specific site. Both types are generally air-cooled for small hydroelectric power plant applications. Most installations utilize synchronous generators. Induction generators are only used when system conditions and economics permit.

4.2.5.1 Synchronous Generator

The principal advantage of a synchronous generator for small hydroelectric plant applications is its capability to operate with either a leading or lagging power factor, by control of its excitation. Most generators are required to furnish reactive power. They should have a power factor rating required by the local load, or the connecting utility power system, or both, which commonly ranges between 0.9 and 0.95. Some applications may require a machine with an even lower power factor.

Another advantage of the synchronous generator is its ability to establish its own operating voltage and maintain frequency while operating isolated. Thus, if the interconnection to the power system is severed, the generator may continue supplying the station and local load, hydraulic conditions permitting. To utilize this benefit requires accurate and responsive speed and power output control (governor) and voltage and reactive power control (automatic voltage regulator). Certain aspects of protection system operation, which is discussed in Sec 6, need to be considered also.

Synchronous generators require direct current field excitation. Excitation for smaller, higher speed units is generally provided by direct-driven brushless exciters. Larger, slower speed generators generally utilize static exciters with solid-state equipment that converts alternating current to direct current.

Automatic voltage regulators compare measured generator voltage with a reference value, and adjust the exciter output accordingly to reduce the difference to zero. The device used to adjust the reference value is usually motor operated, allowing control from a remote location.

Copyright © 1988 IEEE All Rights Reserved

Copyright The Institute of Electrical and Electronics Engineers, Inc.
Provided by IHS under license with IEEE
No reproduction or networking permitted without license from IHS Not for Resale

4.2.5.2 Induction Generator

The advantages of an induction generator are lower installed and maintenance costs from elimination of the exciter, voltage regulator, and synchronizer. The disadvantages are its inability to provide reactive power or volt age control or to be used as an isolated power source, as well as its lower efficiency throughout the operating range.

The induction generator draws its excitation (magnetizing) current from the electrical system. A standard squirrel cage motor may, in some instances, be used as an induction generator—providing the rotor can withstand the turbine runaway speed. In addition, since no motor-starting torque is required, the rotor is designed to have low resistance and consequently lower rotor losses. Power is generated by operating the turbine at a speed higher than the synchronous speed of the generator.

Reactive excitation current and system restraints can limit the size of an induction generator. As with induction motors, power factor correction capacitors can be added, to maintain the power factor within acceptable limits. The capacitor should be connected only when the generator is operating at rated load. The capacitor must be disconnected from the generator when the generator is disconnected from the power system, to avoid voltage rises that may occur at overspeed conditions. The controls should be designed so that, if an induction generator with power factor correction capacitors or cables or lines becomes suddenly separated from a synchronous system, (a) there is no possibility of operating the induction generator as a self-excited generator, from the capacitance of power factor correction capacitors, cables, or long lines, and (b) there is an adequate time delay before reclosure to permit the generator's open circuit voltage to decay to less than 25% of rated voltage.

4.2.6 Generator Switchgear

The switchgear provides the means for connecting and disconnecting the generator to and from the power system during normal start-up and shutdown, and protects and isolates the generator from the power system in the event of malfunctions, such as short circuits, overvoltage, etc.

The generator output voltage will determine the voltage class of the circuit breaker selected for the application. Normal generator voltages are 480 V, 2.3 kV, 4.16 kV, 6.9 kV and 13.8 kV. Normally, a circuit breaker is used for switching the generator. Alternatively, a lower-cost contactor, particularly suitable for repetitive switching duty, could be used when available for the required voltage. If a contactor is used, fuses should be utilized for interruption of short circuit currents.

4.2.7 Main Transformer

The transformer is used to match the generator voltage to the system voltage. The kVA rating is determined by the rating of the connected generator or generators. Oil-filled transformers are used for outdoor installations, but usually not for indoor installation in the powerhouse because of the additional cost of providing required oil containment and fire protection. Transformers using air or solid or non-flammable liquid insulation are normally used for indoor installations.

4.2.8 Isolating Disconnect Switch

The need for installing a visible break, gang-operated, disconnect switch at the interface point between the hydroelectric plant and the utility system for isolation purposes should be reviewed with the utility.

4.2.9 Metering

The plant owner may install for his own purposes metering within the plant to measure gross generation and station service consumption.

In addition, the utility may install a protective enclosure containing sockets for connection of the utility's kilowatt hour and kilovar hour revenue meters, located for convenient access by utility personnel. Necessary current transformers, potential transformers, or potential devices are commonly installed on or near the main transformer, and in conformance with the utility's metering standards.

Copyright © 1988 IEEE All Rights Reserved

Copyright The Institute of Electrical and Electronics Engineers, Inc.
Provided by IHS under license with IEEE
No reproduction or networking permitted without license from IHS Not for Resale

4.2.10 Unit Substation

It may be practical to install the separate components, such as switchgear, transformer, isolating disconnect switch, and metering box (see 4.2.6 to 4.2.9), in a unit substation. The unit substation can also include switchgear and other equipment necessary for the distribution of station service power.

4.3 Mechanical Auxiliary Systems

Various auxiliary systems and equipment are applied as required for the particular installation. These may include the following:

4.3.1 Lubrication Systems

These systems provide oil as required for pressure or oil-bath lubricated bearings.

4.3.2 Sump Pumps

This auxiliary is used to remove leakage water from the station.

4.3.3 Air Compressor

This auxiliary is used to provide air for the governor and for other equipment, such as air brakes and maintenance equipment.

4.3.4 Air Admission Valve

This auxiliary is used to admit air into the turbine or tail water passageway.

4.3.5 Cooling Water System

This system provides cooling water for the generator stator and bearings, speed increaser, and the turbine bearing and packing box.

4.3.6 Fire Detection and Protection System

This system includes sensors to detect fire and provides extinguishing means, such as carbon dioxide or water, where appropriate.

5. Station Service Electrical System

5.1 General

The design of the station service system of small hydroelectric power plants may vary significantly depending on consideration of a combination of factors including, but not limited to:

1) The degree of importance of the generator or generators.
2) The number of main transformers to be installed.
3) The number and availability of power sources to the plant.
4) The availability of necessary electrical and mechanical auxiliary systems.

Copyright © 1988 IEEE All Rights Reserved

Copyright The Institute of Electrical and Electronics Engineers, Inc.
Provided by IHS under license with IEEE
No reproduction or networking permitted without license from IHS Not for Resale

For the purpose of this guide, two basic cases will be considered:

1) A single auxiliary supply—typically for a non-critical plant whose loss of generation can be tolerated, and which would suffer no harm due to loss of auxiliary systems.
2) Multiple auxiliary supplies-typically for critical plants whose generation is important, or that would be endangered by loss of auxiliary systems.

For each of these two cases, both the ac and dc supplies will be discussed and the assumption made that the plant is interconnected with a large power system, which is generally the case. Protection aspects of the station service system are discussed in Sec 6.

5.2 Plants With Single Auxiliary Supply

5.2.1 AC Supply

In the case of plants with a single auxiliary supply, the single line diagram of the ac station service supply could typically be as in Fig 4, for the unit feeding station service.

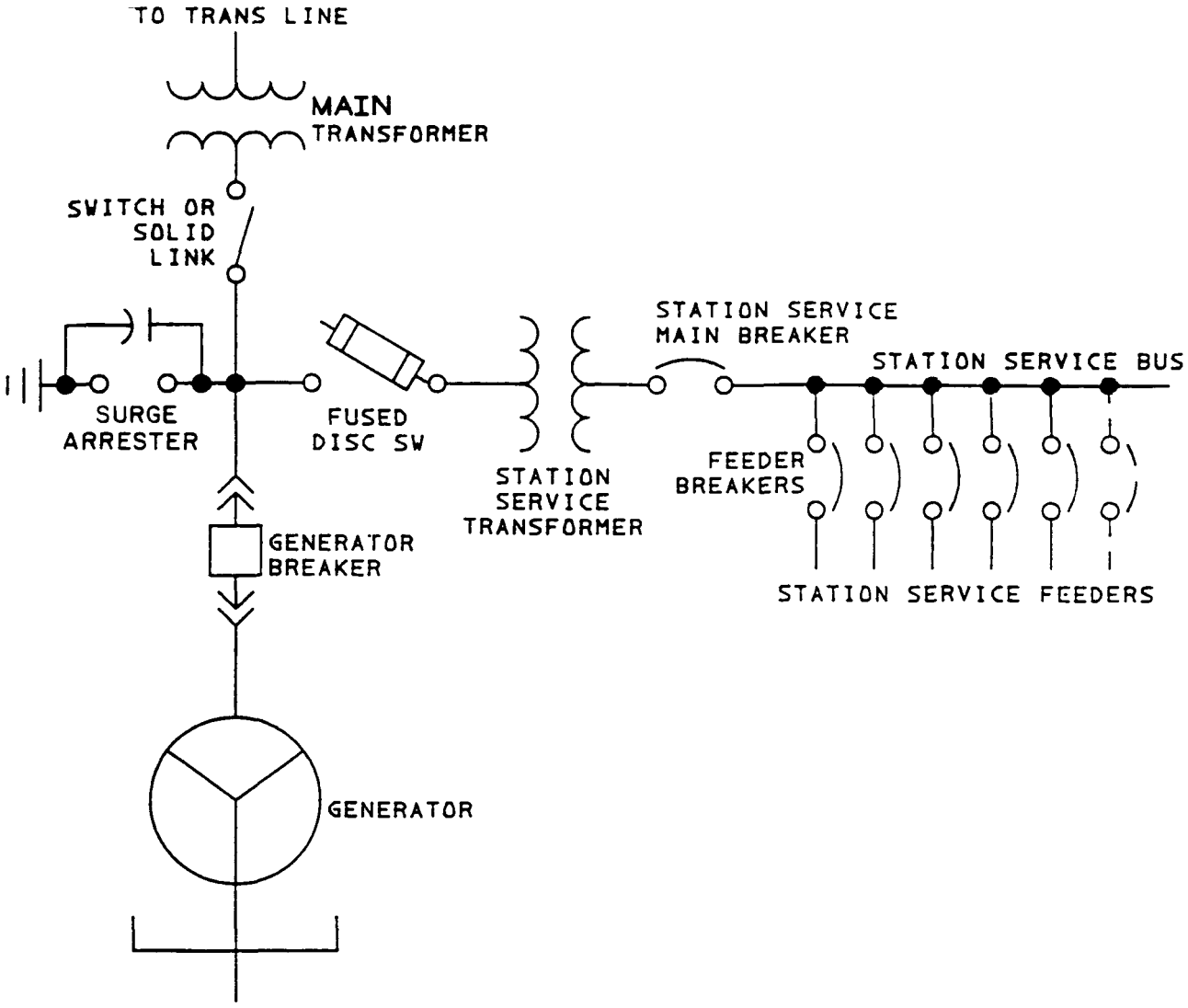

Figure 4—Typical Single Line Diagram of a Plant Having a Single Auxiliary Supply

Copyright © 1988 IEEE All Rights Reserved

Copyright The Institute of Electrical and Electronics Engineers, Inc.
Provided by IHS under license with IEEE
No reproduction or networking permitted without license from IHS Not for Resale

When the unit is feeding power into the power system, it also feeds plant ac station service. If the generator in Fig 4 is out of service, station service can be fed from the transmission line. If the main transformer is out of service, station service may be fed from the generator, with the isolating switch open, providing the generator is the synchronous type and hydraulic conditions permit stable operation at low loads. If this feature is not needed, then the isolating switch can be eliminated.

The flexibility for restoring auxiliary ac supply can be of prime importance if there are critical loads that must be energized quickly. Examples of such loads are heating, sump pumps, spillway gates, and headgate motors. The need for rapid restoration of station service power may justify a stand-by source such as a small diesel engine generator or a separate feed from the utility, which is discussed in Sec 5.3.

The station service transformer capacity should be selected to accommodate the station service loads. Some examples of station loads are as follows:

Governor oil pumps
Headgate operator
Transformer cooling fans (if used)
Sump pumps
Air compressor
Battery charger
Building lighting, heating, and ventilating
Service outlets
Outdoor lighting
Uninterruptible power supply

In general, the required station service transformer capacity will range between 1% of plant capacity for larger, multi-unit plants, to 5% of plant capacity for smaller, single-unit plants.

In some very small plants, where the generator voltage is also the voltage required for station service, there is no need for a station service transformer and the station service breaker will be tapped directly between the generator breaker and the isolating switch. In most cases, a single main transformer for two or more units may be used, provided the owner can afford to lose complete plant output and auxiliaries in case of a transformer failure and during transformer maintenance.

5.2.2 DC Supply

Generally, for the type and size of plants that are dealt with in this section, a battery set will be installed to feed critical loads, such as protection and control circuits. Use of dc for control and protection circuits is warranted, since the circuits will be more reliable. However, ac can be used for this purpose if the cost of the dc system cannot be justified.

The battery will be sized to supply the normal dc load, such as control and protective relay circuits, indicating lights, emergency lighting circuits, inverters for control equipment, oil pumps, field flashing for the static excitation, and circuit breaker operation. IEEE Std 485-1983 , IEEE Recommended Practice for Sizing Large Lead Storage Batteries for Generating Stations and Substations [19] can be used to derive the required battery capacity. The battery voltage will generally be 125 V dc, but on smaller plants 48 V dc may be acceptable. Lead-acid or nickel-cadmium are the two types of batteries most commonly used.

An automatic float, rectifier type battery charger is required. It will be sized to carry the continuous dc load (relays, indicating lights, etc), plus sufficient capacity to recharge the station battery.

A typical single line diagram is shown in Fig 5. Fused disconnect switches may be used instead of circuit breakers.

Copyright © 1988 IEEE All Rights Reserved

--`,-`-`,,`,,`,`,,`---

Copyright The Institute of Electrical and Electronics Engineers, Inc.
Provided by IHS under license with IEEE
No reproduction or networking permitted without license from IHS Not for Resale

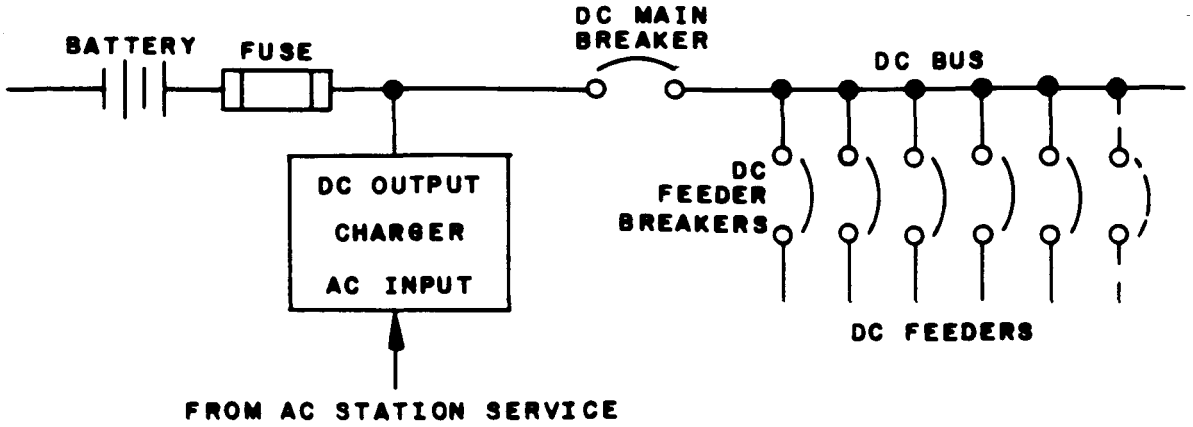

Figure 5—Typical Single Line Diagram of a DC Distribution System With a Single Battery Source

5.3 Plants Utilizing Multiple Auxiliary Supplies

5.3.1 AC Supply

In the case of plants with multiple auxiliary supplies, the single line diagram would typically be as in Fig 6, where two units are shown feeding station service. The second supply could alternatively be obtained from a separate utility connection rather than a second generator. Another possibility for station service supply is by provision of an emergency generator connected to the plant's distribution system. The station service supply configuration will depend on the degree of reliability of station service supply desired. Occasionally, two tie breakers in series are used for reliability. In other cases, no tie breakers will be used.

Again in this scheme, isolating switches and drawout-type generator circuit breakers will permit maintaining two sources of station service power, even if one of the generators or main transformers associated with station service is out of service.

Copyright © 1988 IEEE All Rights Reserved

Copyright The Institute of Electrical and Electronics Engineers, Inc.
Provided by IHS under license with IEEE
No reproduction or networking permitted without license from IHS Not for Resale

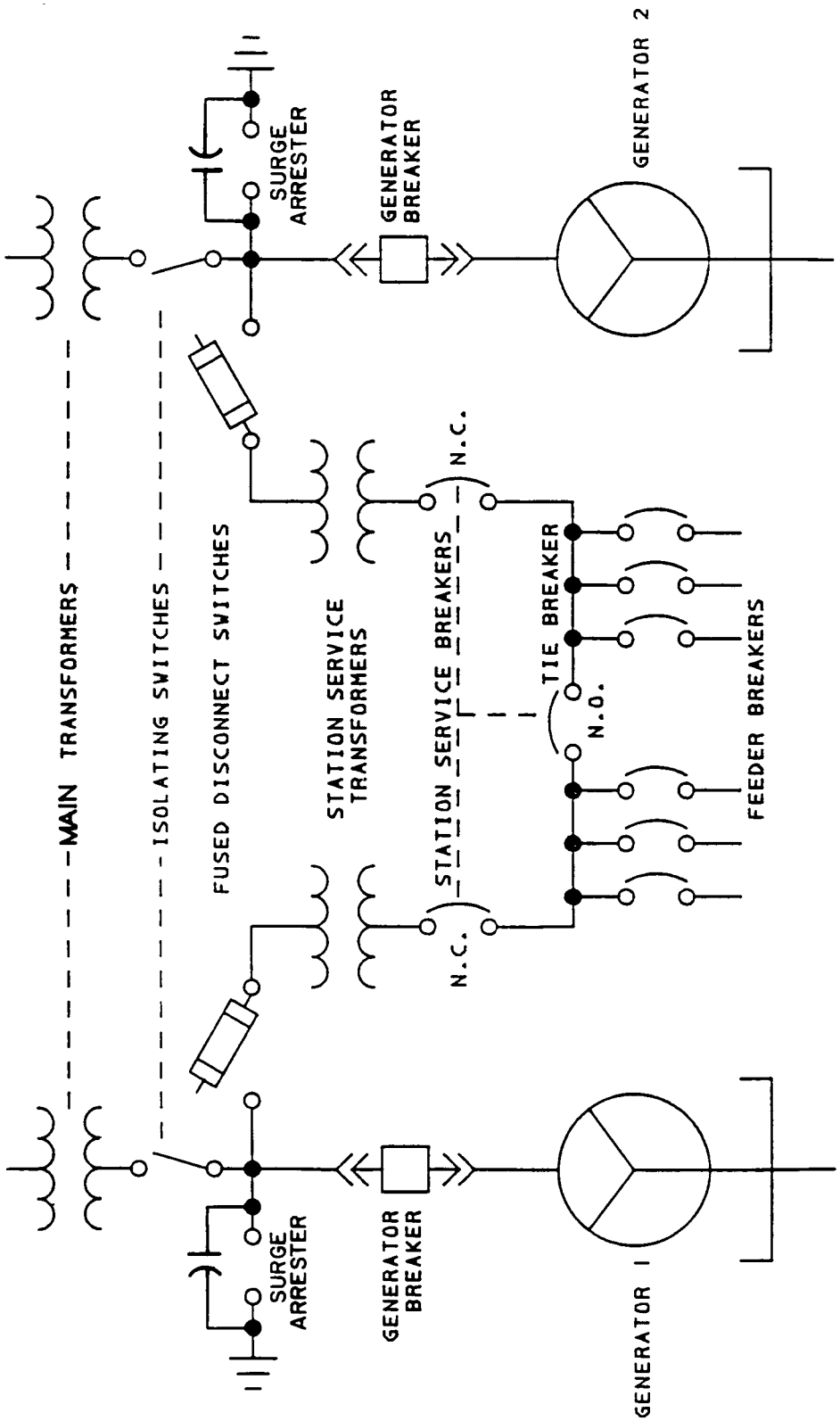

Figure 6—Typical Single Line Diagram of a Multiple Unit Plant Having Multiple Auxiliary Supplies

Copyright © 1988 IEEE All Rights Reserved

Copyright The Institute of Electrical and Electronics Engineers, Inc.
Provided by IHS under license with IEEE
No reproduction or networking permitted without license from IHS
Not for Resale

5.3.2 DC Supply

The general comments made in 5.2.2 will also apply to plants requiring more than one ac source. However, duplication of the battery and charger installation is not usual in small plants.

6. Protection

6.1 General

Small hydro turbine-generators should be protected against mechanical, electrical, hydraulic, and thermal damage that may occur as a result of abnormal conditions in the plant or in the utility system to which the plant is electrically connected.

The abnormal operating conditions that may arise should be detected automatically and corrective action taken in a timely fashion to minimize the impact. Relays (utilizing electrical quantities), temperature sensors, pressure or liquid level sensors, and mechanical contacts operated by centrifugal force, etc, may be utilized in the detection of abnormal conditions. These devices in turn operate other electrical and mechanical devices to isolate the equipment from the system.

Where programmable controllers are provided for unit control, they can also perform some of the described protective functions.

Operating problems with the turbine, generator, or associated auxiliary equipment require an orderly shutdown of the affected unit while the remaining generating units (if more than one is in the plant) continue to operate. Alarm indicators could be used to advise operating personnel of the changed operating conditions.

Loss of individual items of auxiliary equipment may or may not be critical to the overall operation of the small plant, depending upon the extent of redundancy provided in the auxiliary systems. Many auxiliary equipment problems may necessitate loss of generation until the abnormal condition has been determined and corrected by operating or maintenance staff.

The type and extent of the protection provided will depend upon many considerations, some of which are: (1) the capacity, number, and type of units in the plant; (2) the type of power system; (3) interconnecting utility requirements; (4) the owner's dependence on the plant for power; (5) manufacturer's recommendations; (6) equipment capabilities; and (7) control location and extent of monitoring. Overall, though, the design of the protective systems and equipment is intended to detect abnormal conditions quickly and isolate the affected equipment as rapidly as possible, so as to minimize the extent of damage and yet retain the maximum amount of equipment in service.

Small hydroelectric power plants generally contain less complex systems than large stations, and therefore tend to require less protective equipment. On the other hand, the very small stations are typically unattended and are under automatic control, and frequently have little control and data monitoring at an off-site location. This greater isolation tends to increase the protection demands of the smaller plants.

An inherent part of the power plant protection is the design of the automatic controls to recognize and act on abnormal conditions or control failures during startup. Close coordination of the unit controls and other protection is essential.

Copyright © 1988 IEEE All Rights Reserved

Copyright The Institute of Electrical and Electronics Engineers, Inc.
Provided by IHS under license with IEEE
No reproduction or networking permitted without license from IHS Not for Resale

6.2 Malfunction Considerations

Although plant protection system designs will vary from plant to plant, they should nevertheless provide certain basic functions. Broadly, these are to protect the equipment from major damage and to provide automatic separation from the utility system when necessary to permit correction of system troubles. The following lists major malfunctions that generally need to be considered in small plants:

6.2.1 Plant Mechanical Equipment Troubles

6.2.1.1 Turbines

a) Excessive vibration
b) Bearing problems
c) Overspeed
d) Insufficient water flow
e) Shear pin failure
f) Grease system failure

6.2.1.2 Hydraulic Control System

a) Low accumulator oil level
b) Low accumulator pressure
c) Electrical, electronic, or hydraulic malfunctions within the governing or gate positioning system

6.2.1.3 Water Passage Equipment

a) Failure of head gate or inlet valve
b) Headgate inoperative
c) Trash rack blockage
d) Water level control malfunction

6.2.2 Plant Electrical Equipment Troubles

6.2.2.1 Generator

a) Abnormal electrical conditions (see 6.3.2)
b) Stator winding high temperature
c) Low frequency
d) Bearing problems
e) Motoring
f) Fire
g) Excessive vibration
h) Cooling failure
i) Overspeed

6.2.2.2 Main Transformer

a) Insulation failure
b) High temperature
c) Abnormal oil level
d) Fire

Copyright © 1988 IEEE All Rights Reserved

Copyright The Institute of Electrical and Electronics Engineers, Inc.
Provided by IHS under license with IEEE
No reproduction or networking permitted without license from IHS Not for Resale

6.2.2.3 Generator Switchgear and Bus

a) Electrical fault
b) Mechanical failure
c) Loss of control power

6.2.3 General Plant Troubles

6.2.3.1 Station Service

a) Transformer failures
b) Unbalanced current

6.2.3.2 DC System Trouble

6.2.3.3 Station Air System Trouble

6.2.3.4 Service Water System Trouble

6.2.3.5 Flooding

6.2.3.6 Fire

6.2.3.7 Unauthorized Entry

6.2.3.8 Protection or Control Logic System Malfunction

6.2.3.9 Water Level Monitoring System Malfunction

6.2.4 Utility System Troubles

Utility line faults and other abnormal utility system conditions should be detected and the plant be disconnected from the utility system. Abnormal utility system conditions include the following situations:

1) Ground or phase faults
2) Single phasing
3) Abnormal voltage
4) System separation (islanding)

Coordination with the utility is needed in selecting specific protective equipment, particularly for line fault detection.

6.3 Devices Used in a Typical Protection System

There are numerous ways of providing the functional protective requirements of the plant. While standard devices are generally available that can provide the protective functions required, each station should have specific design review by qualified engineers who are well acquainted with the protection requirements of the power plant equipment as well as the interconnection.

The following section describes components of a typical protection system that might be applied to a small hydro plant. Discussions and diagrams are included to illustrate location and arrangement of relays.

Copyright © 1988 IEEE All Rights Reserved

--`,,`-`-`,,`,,`,`,,`---
Copyright The Institute of Electrical and Electronics Engineers, Inc.
Provided by IHS under license with IEEE
No reproduction or networking permitted without license from IHS Not for Resale

6.3.1 Protective Devices

6.3.1.1 Temperature

A temperature device, possibly incorporating display and contacts for alarm annunciation and tripping to monitor bearing, stator, and transformer winding temperatures. Resistance temperature devices operating relays can also be used to detect generator stator overheating.

6.3.1.2 Pressure and Level

Pressure and level switches installed in the turbine air and oil systems, to alarm, block startup, or trip, as necessary.

6.3.1.3 Over and Underspeed

Direct-connected or electronically driven speed switches for alarm, control, and tripping.

6.3.1.4 Vibration

Vibration detectors monitoring turbine or generator shaft sections, with alarm and trip contacts.

6.3.1.5 Water Level

A measuring system incorporating level sensors and monitoring equipment, to alarm, trip, or control turbine output on limiting values of headwater or tail-water level, or head.

6.3.1.6 Fire

Sensors located in areas where fire can occur and connected to a central fire monitor for alarm. Small generators usually do not have fire sensors or suppression equipment, since they are not usually enclosed.

6.3.1.7 Miscellaneous Mechanical Conditions

Sensing devices integral to the protected systems, such as automatic greasing system, wicket gate shear pins, transformer, cooling, and station sump drainage system.

6.3.2 Protective Relays

Figure 7 illustrates a typical protective relay arrangement for a small synchronous generator hydro unit. This is representative of a single unit. High impedance grounding is fairly typical for small single unit plants as in Fig 7. The generator neutral grounding arrangement and line relaying design require coordination with the utility system to which the station is connected.

Induction generators require no excitation system protection.

Where a small plant supplies an isolated system, the settings for frequency and voltage relays may have to be less sensitive than the settings for interconnected units, especially if the penstock water column has a long time constant, or if the generator inertia is low.

The following is a brief discussion of the frequently provided relays. A comprehensive guide for protection of generators is provided in ANSI/IEEE Std C37.102-1987 , IEEE Guide for AC Generator Protection [23].

6.3.2.1 Voltage Restrained or Voltage Controlled Overcurrent (51 V)

Provides generator stator overcurrent protection.

Copyright © 1988 IEEE All Rights Reserved

Copyright The Institute of Electrical and Electronics Engineers, Inc.
Provided by IHS under license with IEEE
No reproduction or networking permitted without license from IHS Not for Resale

6.3.2.2 Ground Overvoltage (59GN)

Device 59GN is applied to provide generator ground fault protection. This device may be replaced by a ground overcurrent relay.

6.3.2.3 Reverse Power (32)

Protects against motoring of the generator from the system.

6.3.2.4 Underexcitation (40)

More complete protection is afforded by a directional impedance loss-of-excitation relay monitoring the generator reactive input. On smaller units, low field current together with sensing of abnormal voltage could provide this function.

6.3.2.5 Unbalanced Current or Negative Sequence Overcurrent (46)

This relay senses unbalanced phase currents that cause rotor heating. Separately adjustable alarm and trip setpoints are available. This protection is particularly important where fuses are used in major power circuits.

6.3.2.6 Field Ground (64F)

Although the ungrounded field circuit of a synchronous generator can tolerate a single ground without damage, this relay is desirable for alarm notification of this condition, so that preventive action can be taken before a second, potentially damaging, fault occurs.

6.3.2.7 Generator and Transformer Differential (87G and 87T)

On larger, more important units, these relays will rapidly detect generator or transformer faults and separate the unit/transformer from the system.

6.3.2.8 Generator and Transformer Lockout (86G and 86T)

These lockout relays, when operated, are arranged to trip the generator circuit breaker or contactor and rapidly stop the turbine. Excitation is usually tripped immediately after the generator breaker or contactor has opened, although it may be done simultaneously.

Lockout relay 86G is normally tripped by operation of all relays indicative of abnormal condition of plant equipment. Temporary tripping for utility line faults and thermal overload would trip a non-lockout tripping relay (94).

6.3.2.9 Generator Undervoltage (27)

This relay senses a low voltage condition.

6.3.2.10 Bearing Protection (38)

Operates on excessive bearing temperature.

6.3.2.11 Vibration Protection (39)

Operates for abnormal mechanical conditions such as vibration.

--`,,`-`-`,,`,,`,`,,`---
Copyright © 1988 IEEE All Rights Reserved

Copyright The Institute of Electrical and Electronics Engineers, Inc.
Provided by IHS under license with IEEE
No reproduction or networking permitted without license from IHS
Not for Resale

6.3.2.12 Phase Sequence Voltage Relay (47)

This relay will not allow closure of the generator breaker unless phase rotation is proper.

6.3.2.13 Exitation Transformer Overcurrent (51E)

This relay provides overload protection for the unit connected excitation transformer.

6.3.2.14 Generator Overvoltage Relay (59)

This device provides protection against machine overvoltages.

6.3.2.15 Voltage Balance Relay (60)

This device compares the voltage between two VTs, and hence may be used to detect a blown VT fuse. Upon fuse failure, some relay operations such as loss of field may need to be blocked. Also, voltage and speed regulators should be transferred to manual mode.

6.3.2.16 Frequency Relay (81)

An overfrequency relay is installed as backup overspeed protection to mechanical speed switches. An underfrequency relay may also be installed. Underfrequency operation at rated voltage can lead to excessive heating.

6.3.2.17 Transformer Overcurrent Relay (50/51T)

This relay provides overload protection for the unit transformer. It also may be considered a backup to the transformer differential relay.

6.3.2.18 Transformer Sudden Pressure Relay (63T)

This device can be applied to oil-filled transformers. It operates on sudden increases in gas pressure resulting from internal faults.

6.3.2.19 Transformer Hot Spot Protection (49T)

This may be applied and wired, usually to alarm, based upon winding temperature.

6.3.2.20 Utility System Relays

Operation of certain utility system relays may be arranged to trip the small hydro unit, and lock out restarting. Discussion of utility interconnection is in ANSI/IEEE C37.95-1974 (R1981) [22].

6.3.2.21 Metering

The metering shown in Fig 7 may be direct reading or provided by transducers. The synchronizing circuitry may be nothing more than a synchroscope, or may be a sophisticated automatic synchronizer. The watt hour and watt indication may be provided by a single device or separate devices.

Copyright © 1988 IEEE All Rights Reserved

Copyright The Institute of Electrical and Electronics Engineers, Inc.
Provided by IHS under license with IEEE
No reproduction or networking permitted without license from IHS Not for Resale

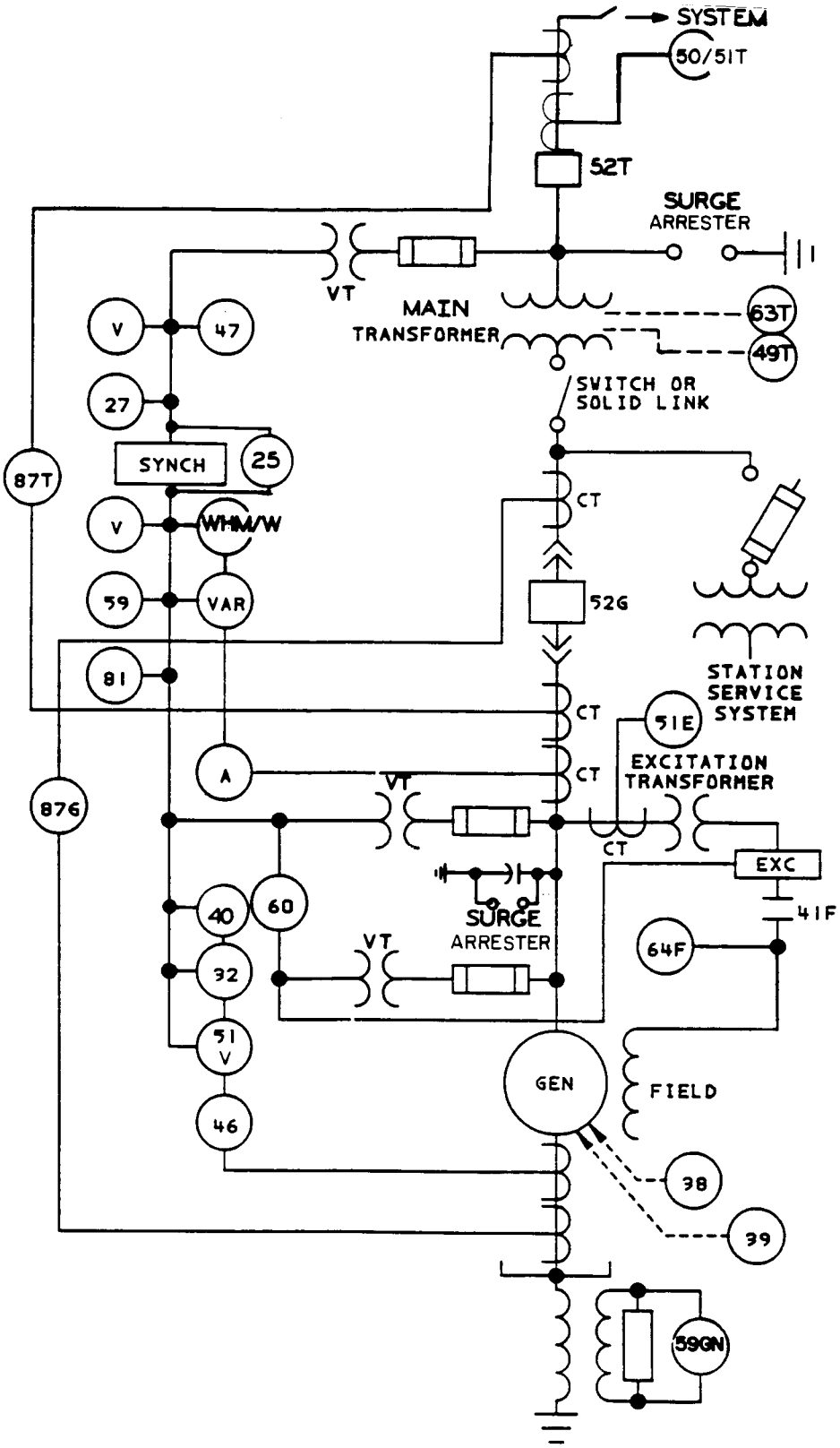

Figure 7—Typical Single Line Diagram for a Small Hydro Unit

Copyright © 1988 IEEE All Rights Reserved

Copyright The Institute of Electrical and Electronics Engineers, Inc.
Provided by IHS under license with IEEE
No reproduction or networking permitted without license from IHS
Not for Resale

25	SYNCHRONISM CHECK RELAY
27	UNDERVOLTAGE RELAY
32	REVERSE POWER RELAY
38	BEARING TEMPERATURE RELAY
39	VIBRATION DETECTOR
40	LOSS OF EXCITATION RELAY (IMPEDANCE TYPE RELAY SHOWN)
41F	FIELD EXCITATION CIRCUIT BREAKER
46	NEGATIVE SEQUENCE OR UNBALANCED CURRENT RELAY
47	PHASE SEQUENCE CHECK RELAY (FOR SYNCHRONIZING)
49T	TRANSFORMER HOT SPOT PROTECTION
51E	EXCITER OVERCURRENT RELAY
50/51T	TRANSFORMER OVERCURRENT RELAY
51V	VOLTAGE RESTRAINED OR VOLTAGE CONTROLLED OVERCURRENT RELAY
52G	GENERATOR CIRCUIT BREAKER
52T	TRANSFORMER HIGH SIDE CIRCUIT BREAKER
59	OVERVOLTAGE RELAY
60	VOLTAGE BALANCE RELAY (BLOWN VT FUSE DETECTION)
63T	TRANSFORMER SUDDEN PRESSURE RELAY
64F	FIELD GROUND RELAY
59GN	GENERATOR GROUND FAULT RELAY
81	UNDER/OVERFREQUENCY RELAY
87G	DIFFERENTIAL RELAY FOR GENERATOR
87T	DIFFERENTIAL RELAY FOR TRANSFORMER

A	AMMETER
CT	CURRENT TRANSFORMER
EXC	EXCITER
SYNCH	SYNCHRONIZING CIRCUITRY
V	VOLTMETER
VAR	VARMETER
VT	VOLTAGE TRANSFORMER
WHM/W	WATTHOUR METER/WATTMETER

Figure 7A —Nomenclature for Figure 7

7. Control

7.1 General

For small hydro installations, simplicity of control is suggested; however, the sophistication of control should be based upon the complexity and size of the installation, without compromising unit dependability and personnel safety. Simplicity of control is desirable to keep total installed equipment cost as well as maintenance, repair, and test costs at a minimum. A simpler system would have greater reliability because of a lower component count.

7.2 Unit control

The control logic system for small hydro start and stop sequencing can be provided by hardwired relay logic, programmable controllers, microcomputer-based systems, or a combination of these.

Copyright © 1988 IEEE All Rights Reserved

Copyright The Institute of Electrical and Electronics Engineers, Inc.
Provided by IHS under license with IEEE
No reproduction or networking permitted without license from IHS Not for Resale

The unit control system must be designed to provide startup and shutdown sequencing under both normal and abnormal conditions. Under normal conditions, the unit is started and stopped in a manner that produces a minimal disturbance to the system. For instance, a normal stop sequence entails a controlled unloading of the unit, and when completely unloaded, the generator circuit breaker or contactor is tripped. On the other hand, protective relay operation will initiate immediate tripping of the unit and complete shutdown as quickly as possible. For certain mechanical troubles, the unit is unloaded as quickly as possible before tripping, in order that potential damage from overspeed is avoided.

The unit control system, in order to control and monitor the various control sequences, must interface with a number of plant systems, including the following:

Auxiliary systems: pumps and valves

Governor or load controller: setters, solenoids, and brake control

Excitation: setters, contactors, and circuit breakers

Typical startup and shutdown sequence diagrams are shown in Figs 8–10 for a Francis turbine unit, which, for the sake of illustration, are shown as including a synchronous generator and governor.

Copyright © 1988 IEEE All Rights Reserved

Copyright The Institute of Electrical and Electronics Engineers, Inc.
Provided by IHS under license with IEEE
No reproduction or networking permitted without license from IHS Not for Resale

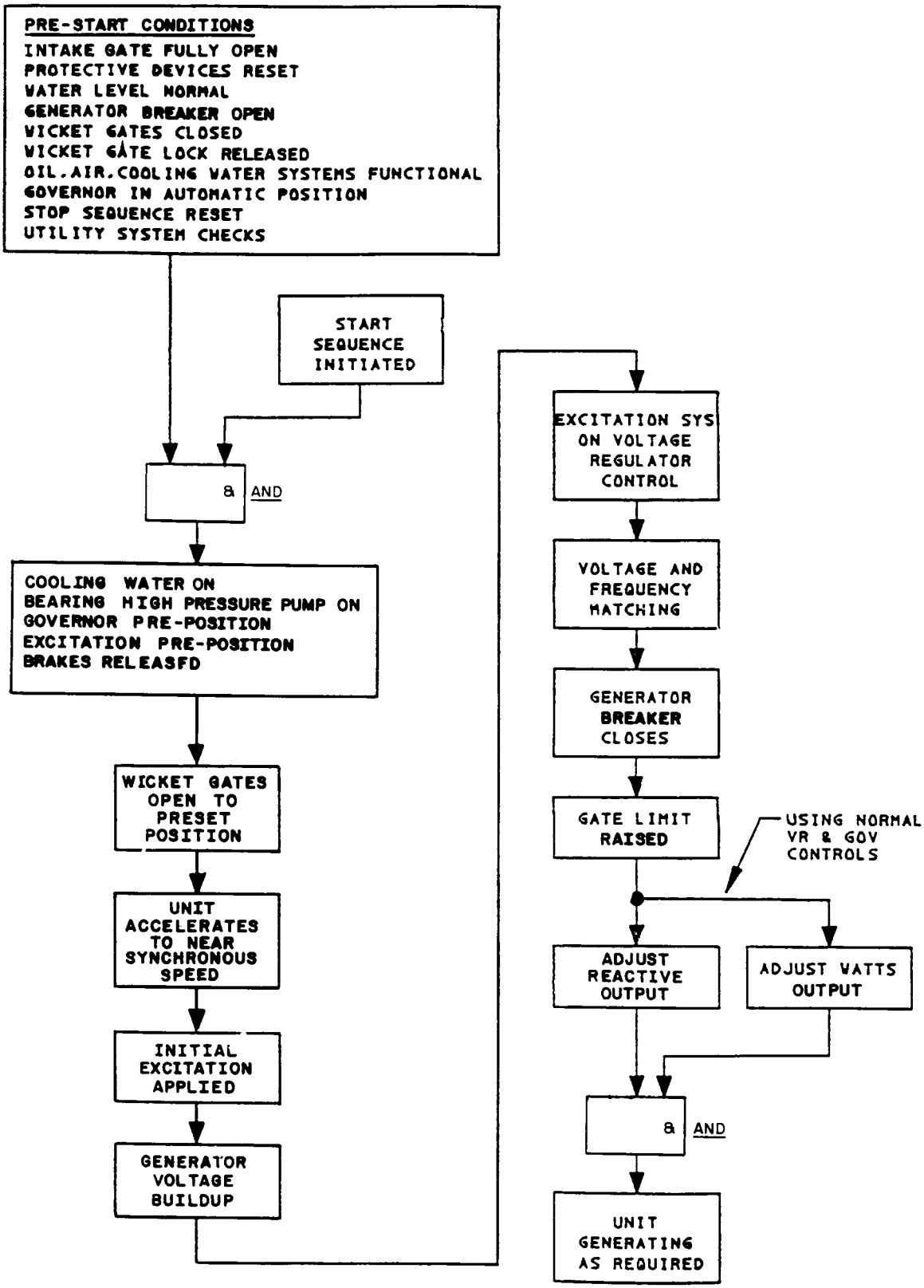

Figure 8—Typical Start Sequence for Synchronous Generator

Copyright © 1988 IEEE All Rights Reserved

Copyright The Institute of Electrical and Electronics Engineers, Inc.
Provided by IHS under license with IEEE
No reproduction or networking permitted without license from IHS Not for Resale

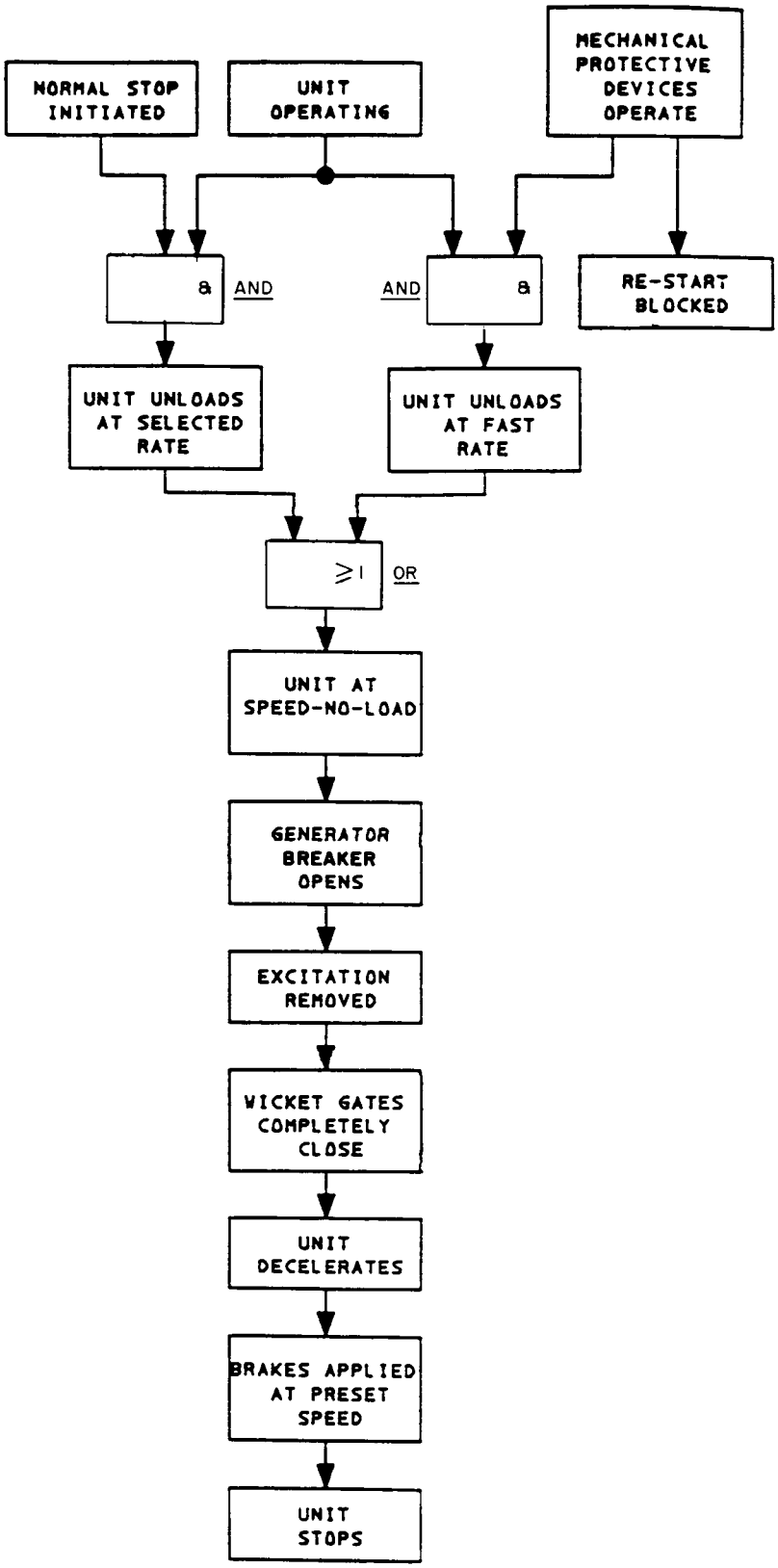

Figure 9—Typical Normal Stop and Mechanical Trouble Stop Sequence for Synchronous Generator

Copyright © 1988 IEEE All Rights Reserved

Copyright The Institute of Electrical and Electronics Engineers, Inc.
Provided by IHS under license with IEEE
No reproduction or networking permitted without license from IHS
Not for Resale

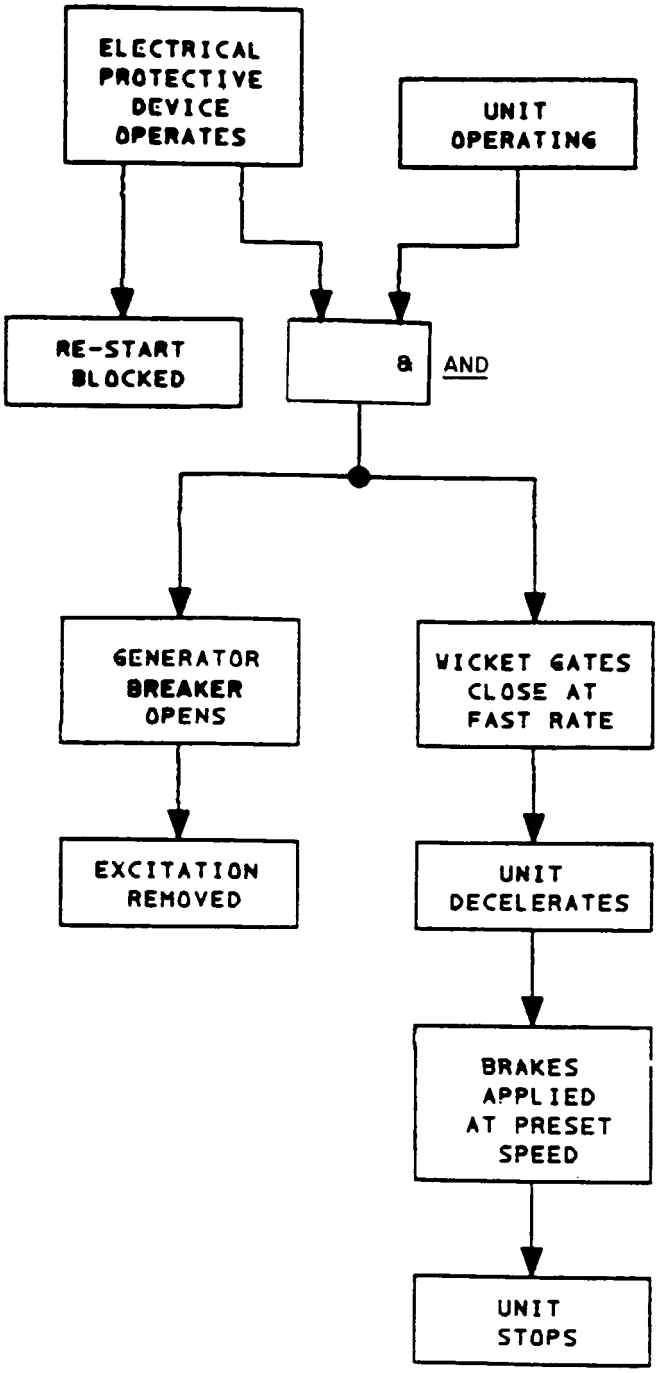

Figure 10—Typical Electrical Trouble Stop Sequence for Synchronous Generator

7.3 Connecting Generator Units to the System

7.3.1 Synchronous Generator Units

For the conventional method of synchronizing, the generator is started and accelerated to near synchronous speed and the excitation applied. The voltage is matched and the frequency (speed) is synchronized to the system before the

Copyright © 1988 IEEE All Rights Reserved

Copyright The Institute of Electrical and Electronics Engineers, Inc.
Provided by IHS under license with IEEE
No reproduction or networking permitted without license from IHS
Not for Resale

generator circuit breaker or contactor is closed. When done perfectly, no current surge will occur. Normally, both manual and automatic synchronizing of the generator are provided. In addition, the speed of some types of turbines under no-load conditions is so sensitive to small adjustments in runner blade angle or in flow as to make only automatic synchronizing practical.

Small hydro power plants will usually be unattended, thus requiring fully automated synchronizing.

Manual synchronizing necessitates presenting the operator with continuous display of voltage, frequency, and phase angle, and provision of devices by which to control voltage and speed.

The automatic synchronizer will generally include the following equipment:

1) A voltage matcher that monitors the generator and system voltage magnitudes and adjusts the automatic voltage regulator setter in the direction to zero out the voltage difference.
2) A speed matcher that monitors the generator and system frequencies and adjusts the governor setter or gate position controller in the direction to zero out the frequency difference.
3) A synchronizer contact that will close the generator circuit breaker automatically when the generator, system voltage, frequency, and phase conditions are proper.

Another method of synchronizing involves bringing the generator up to within a few percent of synchronous speed but not applying excitation. The stator winding is then connected to the line by closing the generator circuit breaker, and the field excitation is applied to pull the generator into synchronism. Associated with this synchronizing method are two transient power swings: one when the circuit breaker closes to connect the generator to the line, and a second when the generator pulls in as a result of excitation application. The size of the generator and its location in the power system will determine the magnitude of voltage dip resulting from these surges, which must be tolerated by connected loads.

7.3.2 Induction Generator Units

The usual method of starting an induction generator is to start the turbine in the normal manner, as is done with a synchronous generator. The generator is run up to synchronous or very slightly above synchronous speed and connected to the system, thereby limiting current inrush to the machine. The system determines the voltage and frequency. The voltage dip, in general, would be greater than connecting a synchronous generator as described in the preceding paragraph.

7.4 Local and Off-Site Control and Instrumentation

The degree of local and off-site control, instrumentation, and alarm implementation will vary as a function of the size of plant, method of system operation, economics, or utility system requirements for control from the utility's premises.

Off-site control can be automatic or manual with a duplication of local controls at a remote location for the desired operation at that site. Interlocks are required at the local site to prevent improper remote manual operation. Off-site control and indication may be established by the use of "supervisory control" equipment, using one of several means of modern communication methods.

Totally automatic start and stop initiation from a local or off-site location is possible. However, unattended operation requires that special attention be given to fail-safe characteristics of the control system.

Copyright © 1988 IEEE All Rights Reserved

Copyright The Institute of Electrical and Electronics Engineers, Inc.
Provided by IHS under license with IEEE
No reproduction or networking permitted without license from IHS Not for Resale

7.4.1 Control Requirements

Instrumentation and control functions are listed below. The items installed will vary as a function of the size of plant, method of system operation, and economics.

- Start and stop sequence initiations.[2]
  Breaker operation—open/close.
- Motorized excitation or voltage regulator setting rheostats to allow remote setting of field current or generator voltage.
- Governor control and flow control device position (gate or blade angle, or nozzle, or valve):
  1) Speed-no-load;
  2) Best efficiency;
  3) Position (gates, blade angle, nozzle, or valve).

Unit auxiliary system control.

7.4.2 Instrumentation Requirements

- kilowatt output per generator.
- kilovar output per generator.kilowatt hour output per generator (3-phase).
  Field voltage and current.
  Synchroscope indication.
- Generator voltage, current, and frequency.
- System voltage.
- Headwater level.
- Tailwater level when required.
- Turbine flow control device position (gates, blade angle, nozzle, or valve).
- Status of any bypass, sluice, or spillway gate.

Transducers or signal transmitters are provided either at the control board or at the equipment.

7.4.3 Status/Alarm Requirements

- Ready for start.
- Breaker position—no alarm if manual operation only.
- Intrusion alarm.
- Fire alarm.
- Emergency station alarm (requires immediate attention).
- General station alarm (response can be deferred).

Trash rack differential pressure alarm.
Unit stopped when not required.
Unit turning when not required.
High bearing temperature.
Loss of lubrication or cooling or both.
Low hydraulic system oil pressure.
High or low water levels.
Incomplete start or stop sequence.
Loss of power.

[2]Items preceded by a bullet are those items normally required for off-site Control of the units.

Copyright © 1988 IEEE All Rights Reserved

Copyright The Institute of Electrical and Electronics Engineers, Inc.
Provided by IHS under license with IEEE
No reproduction or networking permitted without license from IHS Not for Resale

7.5 Communication Links

Several methods of implementing control from an off-site location are possible:

1) Hard wired communications circuits owned by the hydro plant owner (telephone-type line, or fiber optic cable).
2) Leased telephone line.
3) Power line carrier or distribution line carrier.
4) Point-to-point radio.
5) Microwave radio.
6) Satellite.

Metallic circuits in Items 1 and 2 require special protection for equipment and personnel against ground potential rise (GPR) due to electric system fault, since the hydro generator is a source of fault current. GPR is also caused by lightning transmitted through the power lines entering the hydro plant. The papers and guides listed in the Bibliography (see Sec 9) describe this situation and provide methods of mitigation.

For a small plant that may not require or justify an elaborate off-site control application, automatic dialers on a normal telephone circuit are available for off-site alarm indication.

Power line carrier and distribution line carrier, including insulated ground wire systems, can be used for communications purposes where other means of communication are not practical or available. This method couples a high frequency signal on the power line or insulated ground wire and is decoupled at an off-site point. Literature on this subject is listed in the Bibliography.

Space radio can be used utilizing approved frequencies, and microwave radio can be practical if the hydro plant owner has an existing microwave system.

8. Operation

8.1 General

Operationally, the small hydro electric project links the waterway system in which it is installed to the electrical system to which it is connected. Operation of the project may be based on available water flow, or it may attempt optimum matching of the energy and capacity resources of the waterway with the corresponding requirements of the electrical system. This optimization may be impaired because of the non-coincident variation in water flows and electrical demand.

Operation of the small hydro electric plant should consider its interface with both the waterway system and the electrical system. Ideally, operation of the project should neither jeopardize safety and security, nor cause major disturbances to either system. Some interface requirements are a matter of decree by governmental agencies or the electrical utility.

8.2 Waterway Operation

The small run-of-river (or irrigation) hydroelectric project is commonly sited where there is minimal storage capability and where flows can fluctuate widely as a function of normal and abnormal precipitation, snow melting, and releases from upstream projects. Therefore, to maintain reasonable head on the turbine, it should be operated to utilize the water at about the same rate as it enters the system. The penalty for not meeting this objective is either spilling unused water or drawing the headwater down to an unacceptable level. Automatic control systems are available that will regulate the turbine according to headwater level, but manual override capabilities are essential to permit lowering headwater level beyond the normal limit to meet emergency peak load requirements.

Copyright © 1988 IEEE All Rights Reserved

Copyright The Institute of Electrical and Electronics Engineers, Inc.
Provided by IHS under license with IEEE
No reproduction or networking permitted without license from IHS Not for Resale

8.3 Project Interface With the Waterway System

There are often a variety of other constraints, imposed by regulatory agencies, which act to further complicate the scheduled operation of a small hydro project. An overriding concern is that the project should not alter water passage or quality significantly from conditions existing before construction of any new works. As a result, there are a number of conditions in addition to water availability that will affect operation. Some of these conditions are as follows:

1) Discharging water at a rate that will neither flood nor drain upstream or downstream abuttors, nor endanger recreational usage or natural habitats;
2) Not drawing down to a level that releases excessive silt;
3) Operation of facilities that will allow seasonal passage of fish; and
4) Minimum required downstream releases.

The operation of several projects in cascade on the same waterway will often require the use of a complex control system that is designed to manage the entire system in the most effective way for power generation purposes and that will recognize the constraints imposed by unit design as well as by regulating conditions.

8.4 Electrical System Operation

The small hydro plant may operate in different modes over the course of a year, depending on water availability and system load requirements. Waterway conditions can vary sometimes unpredictably on a daily basis, and more predictably overall on a seasonal basis. System loads at a specific time can be anticipated based on historical data adjusted for annual growth. For instance, load fluctuations can be predicted on a daily basis, but adjusted for work days versus weekends, and seasonal considerations. The required operation of the small hydro project is therefore a result of both load demand and availability of water at a particular site at a particular time. Consequently, at times when there is abundant flow, the small hydro project may operate almost continuously to supply base load, the portion of system load that is demanded continuously. At other times, when flows are low, the project may only be available to handle the extreme peaks of system load for short durations. In between these two extremes, the project may be operated on cycles of generation and impoundment as water conditions permit.

8.5 Project Interface With the Electrical System

Many small hydro projects are privately owned and may or may not serve some private local load, such as mills, light industry, or a small municipality. In most cases where there is local private load, there is also a connection to the local electric utility system for backup supply under emergency or seasonal conditions. Very often the tie also serves for export of surplus power to the utility system for sale by agreement. It is in the best interests of both parties to agree upon protection systems and procedures that will assure the safety of their respective system equipment, loads, and personnel.

Items meriting careful study and coordination with the utility include the following:

1) Coordination of unit voltage, frequency, and load limits with system equipment capabilities.
2) Identification of magnitude and duration of load and voltage transients occurring during unit startup, synchronizing, and shutdown.
3) Operational philosophy.
4) Metering.
5) Fault contribution.
6) Coordination of operation and coverage of protective relay systems and circuit breakers to ensure that:
   a) The generator trips properly for system faults and remains disconnected for at least the duration of reclosure cycles.
   b) The generator does not cause extended undervoltage or overvoltage, or under or overfrequency condition on the connected system.

Copyright © 1988 IEEE All Rights Reserved

Copyright The Institute of Electrical and Electronics Engineers, Inc.
Provided by IHS under license with IEEE
No reproduction or networking permitted without license from IHS Not for Resale

c) Induction generators are safely disconnected from self-excitation sources, such as capacitor banks, long lines, or cables under system separation conditions.
d) Small hydro plant generators are prevented from backfeeding the utility system upon utility system outages.

7) Convenient provision for application of safety grounds and visible break circuit isolation at the interface.
8) Methods to prevent local or off-site operation of the generator or switching apparatus while personnel are working on either the project or utility system equipment.

Other protective considerations may be necessary, depending on the individual interconnection. As a result of its substantial investment in system equipment and its experience, the electric utility should be consulted early in the hydroelectric power plant planning stage regarding the interconnection.

9. Bibliography

Section 1, Scope

[1] ANSI/NFPA 70-1987, National Electrical Code.

Section 2, Definitions

[2] ANSI/IEEE Std 100-1988, IEEE Standard Dictionary of Electrical and Electronics Terms.

Section 3, Introductions

[3] ERSKINE, L. Small Hydroelectric Generation—A Dam Good Idea. *Electrical Consultant*, July/Aug 1982.

[4] FRIEDLANDER, G. D. Reviving Low-Head and Small Hydro: I & II. *Electrical World*, July 15, 1980, and Aug 1, 1980.

[5] KIRKHAM, H., KLEIN, J. Dispersed Storage and Generation Impacts on Energy Management Systems. *IEEE Transactions on Power Apparatus and Systems*, Feb 1983.

[6] Lifting Hydro's Potential; *EPRI Journal*, Dec 1980.

[7] MITCHELL, A. G. Pricing Electric Power from Small Hydro Plants. *Water Power & Dam Construction*, July 1980.

[8] PRUCE, L. M. Power From Water. *Power*, Apr 1980.

[9] REASON, J. Making Interconnection Work. *Power*, June 1982.

[10] RICE, L. M. How to Estimate Cost Effectiveness of Small Hydroelectric Projects. *Power*, Sept 1981.

[11] SELTZ-PEDRASH, A. The New Energy Boom: Small-Scale Hydropower. *Civil Engineering*, ASCE, Apr 1980.

Section 4, Equipment

[12] BACHMANN, J. Standardizing Small Turbines. *Water Power & Dam Construction*, July 1980.

[13] MAKANSI, J. Equipment Options Multiply for Small-Scale Hydro. *Power*, May 1983.

[14] MAYO, H. Standardized Hydroelectric Generating Units. Joint Power Generation Conference, 1980.

Copyright © 1988 IEEE All Rights Reserved

Copyright The Institute of Electrical and Electronics Engineers, Inc.
Provided by IHS under license with IEEE
No reproduction or networking permitted without license from IHS Not for Resale

[15] MAYO, H. Tube Turbine Keeps Costs Down. *Water Power & Dam Construction*, July 1980.

[16] NAILEN, R. L. The Induction Generator: An Old Idea with a New Application. *Power*, Feb 1980.

[17] PEREIRA, L. Induction Generators For Small Hydro Plants. *Water Power & Dam Construction*, Nov 1981.

[18] TEICHMANN, H. T. International Standardization of Small Hydro Schemes. *Water Power & Dam Construction*, May 1983.

Section 5, Station Service Electrical System

[19] ANSI/IEEE Std 485-1983, IEEE Recommended Practice for Sizing Large Lead Storage Batteries for Generating Stations and Substations.

Section 6, Protection

[20] ANSI/IEEE Std 242-1986, IEEE Recommended Practice for Protection and Coordination of Industrial and Commercial Power Systems.

[21] ANSI/IEEE Std C37.2-1987, IEEE Standard Electrical Power System Device Function Numbers.

[22] ANSI/IEEE Std C37.95-1974 (R1980), IEEE Guide for Protective Relaying of Utility—Consumer Interconnections.

[23] ANSI/IEEE Std C37.102-1987, IEEE Guide for AC Generator Protection.

[24] Applied Protective Relaying. Westinghouse Electric Corp, 1976.

[25] BEEMAN, D. Industrial Power Systems Handbook. 1955.

[26] MASON, C. R. The Art and Science of Protective Relaying. 1956.

[27] ROOK, M. J., GOFF, L. E., POTOCHNEY, G. J., and POWELL, L. J. Application of Protective Relays on a Large Industrial—Utility Tie With Industrial Cogeneration. *IEEE Transactions on Power Apparatus and Systems*, Vol PAS-100, No 6, June 1981.

Section 7, Control

[28] ANSI/IEEE Std 367-1987, IEEE Recommended Practice for Determining the Electric Power Station Ground Potential Rise and Induced Voltage from a Power Fault.

[29] ANSI/IEEE Std 487-1980, IEEE Guide for the Protection of Wire Line Communications Facilities Serving Electric Power Stations.

[30] ANSI/IEEE Std 643-1980, IEEE Guide for Power-Line Carrier Applications.

[31] ANSI/IEEE C37.1-1987, IEEE Standard Definition, Specification, and Analysis of Systems Used for Supervisory Control, Data Acquisition, and Automatic Control.

[32] IEEE-PSCC Committee Report: "The Isolation Concept for Protection of Wire Line Facilities Entering Electric Power Stations," IEEE Paper No T75 1607.

[33] IEEE-PSCC Committee Report: "The Neutralizing Transformer Concept for Protection of Wire Line Facilities Entering Electric Power Station," IEEE Paper No F76-3798.

Copyright © 1988 IEEE All Rights Reserved

Copyright The Institute of Electrical and Electronics Engineers, Inc.
Provided by IHS under license with IEEE
No reproduction or networking permitted without license from IHS Not for Resale

[34] CHESTNUT, H., et al. Monitoring and Control Requirements for Dispersed Storage and Generation. *IEEE Transactions on Power Apparatus and Systems*, Vol PAS-101, No 7, July 1982.

[35] KIRWAN, J. G., and SMITH, W. D. Automatic Control of Hydroelectric Induction Generators. *AIEE Transactions*, Oct. 1953.

[36] POLIDIS, A., and WARNOCK, V. J. Controls and Relays for the Cogeneration/Utility Interface. *Specifying Engineer*, Sept 1982.

[37] SHAFER, L. Hydraulic-Turbine Control Is Simple for Small Power Production. *Power*, Aug 1982.

Section 8, Operation

[38] HORN, N. E., and BERGSEN, J. Water Level Control for Small Hydro Plant. *Water Power & Dam Construction*, Nov 1981.

[39] POPE, J. W. Parallel Operation of Customer Generation. *IEEE Transactions on Industry Applications*, Vol 1A-19, No 1, Jan/Feb 1983.

Copyright © 1988 IEEE All Rights Reserved

Copyright The Institute of Electrical and Electronics Engineers, Inc.
Provided by IHS under license with IEEE
No reproduction or networking permitted without license from IHS Not for Resale