C62.43™



# IEEE Guide for the Application of Surge Protectors Used in Low-Voltage (Equal to or Less than 1000 V, rms, or 1200 V, dc) Data, Communications, and Signaling Circuits

## IEEE Power Engineering Society

Sponsored by the
Surge Protective Devices Committee

IEEE
3 Park Avenue
New York, NY 10016-5997, USA

23 November 2005

**IEEE Std C62.43™-2005**
(Revision of
IEEE Std C62.43-1999)

Copyright The Institute of Electrical and Electronics Engineers, Inc.
Provided by IHS under license with IEEE
No reproduction or networking permitted without license from IHS

Not for Resale

Copyright The Institute of Electrical and Electronics Engineers, Inc.
Provided by IHS under license with IEEE
No reproduction or networking permitted without license from IHS

Not for Resale

**IEEE Std C62.43™-2005**
(Revision of
IEEE Std C62.43-1999)

# IEEE Guide for the Application of Surge Protectors Used in Low-Voltage (Equal to or Less than 1000 V, rms, or 1200 V, dc) Data, Communications, and Signaling Circuits

Sponsor

**Surge Protective Devices Committee**
of the
**IEEE Power Engineering Society**

Approved 10 May 2005

**IEEE-SA Standards Board**

**Abstract:** This guide provides assistance in selecting the most appropriate type of surge protector for a particular data, communication, and/or signaling circuit application. The purpose of this guide is to enable an understanding and an evaluation of the functions of the various types of multiple-component data, communications, and signaling circuit protectors in terms of particular applications.
**Keywords:** current-limiting device, dc-limiting voltage test, impulse-limiting voltage test, multiple-component protector, multiport coupling test, signaling circuit, surge protector

---

The Institute of Electrical and Electronics Engineers, Inc.
3 Park Avenue, New York, NY 10016-5997, USA

Copyright © 2005 by the Institute of Electrical and Electronics Engineers, Inc.
All rights reserved. Published 23 November 2005. Printed in the United States of America.

IEEE is a registered trademark in the U.S. Patent & Trademark Office, owned by the Institute of Electrical and Electronics Engineers, Incorporated.

National Electrical Code and NEC are both registered trademarks in the U.S. Patent & Trademark Office, owned by the National Fire Protection Association, Inc.

Print: ISBN 0-7381-4717-6 SH95343
PDF: ISBN 0-7381-4718-4 SS95343

*No part of this publication may be reproduced in any form, in an electronic retrieval system or otherwise, without the prior written permission of the publisher.*

Copyright The Institute of Electrical and Electronics Engineers, Inc.
Provided by IHS under license with IEEE
No reproduction or networking permitted without license from IHS
Not for Resale

**IEEE Standards** documents are developed within the IEEE Societies and the Standards Coordinating Committees of the IEEE Standards Association (IEEE-SA) Standards Board. The IEEE develops its standards through a consensus development process, approved by the American National Standards Institute, which brings together volunteers representing varied viewpoints and interests to achieve the final product. Volunteers are not necessarily members of the Institute and serve without compensation. While the IEEE administers the process and establishes rules to promote fairness in the consensus development process, the IEEE does not independently evaluate, test, or verify the accuracy of any of the information contained in its standards.

Use of an IEEE Standard is wholly voluntary. The IEEE disclaims liability for any personal injury, property or other damage, of any nature whatsoever, whether special, indirect, consequential, or compensatory, directly or indirectly resulting from the publication, use of, or reliance upon this, or any other IEEE Standard document.

The IEEE does not warrant or represent the accuracy or content of the material contained herein, and expressly disclaims any express or implied warranty, including any implied warranty of merchantability or fitness for a specific purpose, or that the use of the material contained herein is free from patent infringement. IEEE Standards documents are supplied "**AS IS**."

The existence of an IEEE Standard does not imply that there are no other ways to produce, test, measure, purchase, market, or provide other goods and services related to the scope of the IEEE Standard. Furthermore, the viewpoint expressed at the time a standard is approved and issued is subject to change brought about through developments in the state of the art and comments received from users of the standard. Every IEEE Standard is subjected to review at least every five years for revision or reaffirmation. When a document is more than five years old and has not been reaffirmed, it is reasonable to conclude that its contents, although still of some value, do not wholly reflect the present state of the art. Users are cautioned to check to determine that they have the latest edition of any IEEE Standard.

In publishing and making this document available, the IEEE is not suggesting or rendering professional or other services for, or on behalf of, any person or entity. Nor is the IEEE undertaking to perform any duty owed by any other person or entity to another. Any person utilizing this, and any other IEEE Standards document, should rely upon the advice of a competent professional in determining the exercise of reasonable care in any given circumstances.

Interpretations: Occasionally questions may arise regarding the meaning of portions of standards as they relate to specific applications. When the need for interpretations is brought to the attention of IEEE, the Institute will initiate action to prepare appropriate responses. Since IEEE Standards represent a consensus of concerned interests, it is important to ensure that any interpretation has also received the concurrence of a balance of interests. For this reason, IEEE and the members of its societies and Standards Coordinating Committees are not able to provide an instant response to interpretation requests except in those cases where the matter has previously received formal consideration. At lectures, symposia, seminars, or educational courses, an individual presenting information on IEEE standards shall make it clear that his or her views should be considered the personal views of that individual rather than the formal position, explanation, or interpretation of the IEEE.

Comments for revision of IEEE Standards are welcome from any interested party, regardless of membership affiliation with IEEE. Suggestions for changes in documents should be in the form of a proposed change of text, together with appropriate supporting comments. Comments on standards and requests for interpretations should be addressed to:

Secretary, IEEE-SA Standards Board

445 Hoes Lane

Piscataway, NJ 08854

USA

NOTE—Attention is called to the possibility that implementation of this standard may require use of subject matter covered by patent rights. By publication of this standard, no position is taken with respect to the existence or validity of any patent rights in connection therewith. The IEEE shall not be responsible for identifying patents for which a license may be required by an IEEE standard or for conducting inquiries into the legal validity or scope of those patents that are brought to its attention.

Authorization to photocopy portions of any individual standard for internal or personal use is granted by the Institute of Electrical and Electronics Engineers, Inc., provided that the appropriate fee is paid to Copyright Clearance Center. To arrange for payment of licensing fee, please contact Copyright Clearance Center, Customer Service, 222 Rosewood Drive, Danvers, MA 01923 USA; +1 978 750 8400. Permission to photocopy portions of any individual standard for educational classroom use can also be obtained through the Copyright Clearance Center.

Copyright The Institute of Electrical and Electronics Engineers, Inc.
Provided by IHS under license with IEEE
No reproduction or networking permitted without license from IHS
Not for Resale

# Introduction

This introduction is not part of IEEE Std C62.43-2005, IEEE Guide for the Application of Surge Protectors Used in Low-Voltage (Equal to or Less than 1000 V, rms, or 1200 V, dc) Data, Communications, and Signaling Circuits.

This application guide was developed to assist the users of IEEE Std C62.36™-2000. The surge protectors covered are multiple-component series or parallel combinations of linear or nonlinear elements packaged for the purpose of limiting surge voltages, currents, or both.

Some tests are not suitable for all surge protectors as the test methods and criteria given apply to surge protectors with different functions and environmental performance. This guide will help manufacturers and users to decide which tests apply to a surge protector intended for a specific application and how to set up and run those tests.

The need for this application guide originated because of the following industry trends:

— A loss of expertise in protection of equipment connected to data, communications, or signaling circuits

— Decreasing awareness of the historical data and rationale on which standards have been based

— Increased use of sensitive electronic circuits that require surge protection

This substantially revised edition of the application guide now includes informative annexes covering applications as well as updated descriptions of protective devices. In addition, this revision comprehends the changes made to C62.36 in the 2000 edition. These changes include

— Tests for insertion loss and return loss, which were changed to use network analyzers in high-frequency applications

— A new test for measuring the degree of coupling between ports of a multiport surge protector

— A pulse mask test

## Notice to users

### Errata

Errata, if any, for this and all other standards can be accessed at the following URL: http://standards.ieee.org/reading/ieee/updates/errata/index.html. Users are encouraged to check this URL for errata periodically.

### Interpretations

Current interpretations can be accessed at the following URL: http://standards.ieee.org/reading/ieee/interp/index.html.

### Patents

Attention is called to the possibility that implementation of this guide may require use of subject matter covered by patent rights. By publication of this standard, no position is taken with respect to the existence or validity of any patent rights in connection therewith. The IEEE shall not be responsible for identifying patents or patent applications for which a license may be required to implement an IEEE standard or for conducting inquiries into the legal validity or scope of those patents that are brought to its attention.

Copyright © 2005 IEEE. All rights reserved.


Copyright The Institute of Electrical and Electronics Engineers, Inc.
Provided by IHS under license with IEEE
No reproduction or networking permitted without license from IHS
Not for Resale

## Participants

At the time this guide was completed, the C62.43 Working Group had the following membership:

**Bill Curry,** *Chair*
**Albert Martin,** *Vice Chair, Secretary,* and *Editor*
**Michael Maytum,** *Figures Editor*
**Dee Unterweger,** *Editor Emeritus*

Jack Cawley
Nisar Chaudhry
Chrysanthos Chrysanthou
Ernie Gallo
William Goldbach
David Hutchins
Philip Jones
Bogey Klobassa
Carl Lindquist
Mark Lynnes
Wolfgang Oertel
Michael Parente
Brian Price
David Rawlings
Alan Rebeck
Don Turner

The following members of the individual balloting committee voted on this guide. Balloters may have voted for approval, disapproval, or abstention.

Mark Bushnell
James Case
Chrysanthos Chrysanthou
Tommy Cooper
Bill Curry
R. Daubert
Stephen Dare
Byron Davenport
Randall Dotson
Charles Drexler
Amir El-Sheikh
Gary Engmann
James Funke
Ernie Gallo
William Goldbach
Randall Groves
Ken Hanus
Edward Horgan, Jr.
David Jackson
Philip Jones
Jancauskas Joseph
Wilhelm Kapp
Yuri Khersonsky
Joseph L. Koepfinger
Saumen Kundu
Carl LaPlace
Benny Lee
Jason Lin
Carl Lindquist
Al Maguire
Ahmad MahinFallah
Albert Martin
Jesus Martinez
Michael Maytum
Nigel McQuin
Gary Michel
Charles Ngethe
Frederick O'Keefe
Wolfgang Oertel
Michael Parente
Ralph Philbrook III
Robert A. Resauli
Johannes Rickman
Michael Roberts
James Ruggieri
Koenraad Rutgers
Keith Stump
Don Turner
James Wilson

When the IEEE-SA Standards Board approved this guide on 10 May 2005, it had the following membership:

**Don Wright,** *Chair*
**Steve M. Mills,** *Vice Chair*
**Judith Gorman,** *Secretary*

Chuck Adams
Stephen Berger
Mark D. Bowman
Joseph A. Bruder
Bob Davis
Roberto de Marca Boisson
Julian Forster*
Arnold M. Greenspan
Mark S. Halpin
Raymond Hapeman
Richard J. Holleman
Richard H. Hulett
Lowell G. Johnson
Joseph L. Koepfinger*
Hermann Koch
Thomas J. McGean
Daleep C. Mohla
Paul Nikolich
T. W. Olsen
Ronald C. Petersen
Gary S. Robinson
Frank Stone
Malcolm V. Thaden
Doug Topping
Joe D. Watson

*Member Emeritus


Copyright © 2005 IEEE. All rights reserved.
Copyright The Institute of Electrical and Electronics Engineers, Inc.
Provided by IHS under license with IEEE
No reproduction or networking permitted without license from IHS
Not for Resale

Also included are the following nonvoting IEEE-SA Standards Board liaisons:

Satish K. Aggarwal, *NRC Representative*
Richard DeBlasio, *DOE Representative*
Alan Cookson, *NIST Representative*

Michael D. Fisher
*IEEE Standards Project Editor*

Copyright © 2005 IEEE. All rights reserved.


Copyright The Institute of Electrical and Electronics Engineers, Inc.
Provided by IHS under license with IEEE
No reproduction or networking permitted without license from IHS
Not for Resale

# Contents

1. Overview ..... 1

1.1 Scope ..... 1
1.2 Purpose ..... 2
1.3 Electrical environment ..... 2

2. Normative references ..... 2

3. General theory of operation ..... 3

3.1 General description ..... 3
3.2 General theory of operation ..... 4
3.3 Two-terminal basic configuration ..... 5
3.4 Three-terminal basic configuration ..... 5
3.5 Three-terminal theory of operation ..... 6
3.6 Four-terminal basic configuration ..... 7
3.7 Four-terminal theory of operation ..... 7
3.8 Five-terminal basic configuration ..... 8
3.9 Five-terminal theory of operation ..... 9

4. Protector characteristics: nonsurge performance tests ..... 10

4.1 Rated voltage test ..... 10
4.2 Rated current test ..... 10
4.3 DC series resistance test ..... 11
4.4 Standby current and insulation resistance test ..... 11
4.5 Capacitance test ..... 12
4.6 Inductance test ..... 12
4.7 Insertion loss test ..... 13
4.8 Phase shift test ..... 13
4.9 Return loss test ..... 14
4.10 Longitudinal balance test ..... 14
4.11 Pulse mask test ..... 15
4.12 Rise and decay time test ..... 15
4.13 Bit-error rate test ..... 15

5. Protector characteristics: active performance tests ..... 16

5.1 DC-limiting voltage test ..... 16
5.2 Impulse-limiting voltage test ..... 16
5.3 Transition current test ..... 17
5.4 Current response time test ..... 18
5.5 Impulse reset test ..... 19
5.6 Current reset test ..... 20
5.7 AC life test ..... 21
5.8 Impulse life test ..... 21
5.9 Maximum single-impulse discharge test ..... 22
5.10 Multiport coupling test ..... 23


Copyright © 2005 IEEE. All rights reserved.

Copyright The Institute of Electrical and Electronics Engineers, Inc.
Provided by IHS under license with IEEE
No reproduction or networking permitted without license from IHS
Not for Resale

6. Application of surge protectors used in low-voltage data, communications, and signaling circuits ..... 23

6.1 Operational compatibility ..... 24
6.2 Voltage limiting ..... 24
6.3 Grounding and bonding ..... 25
6.4 Location of protectors ..... 25
6.5 Codes and standards ..... 27

Annex A (normative) Description and theory of operation of certain current-limiting devices ..... 28

Annex B (informative) Examples of applications of surge protectors used in low-voltage data, communications, and signaling circuits ..... 37

Annex C (informative) Surge protection for paired-conductor telecom cables serving antenna towers ..... 45

Annex D (informative) Surge protection for DSL systems ..... 48

Annex E (informative) Protection coordination between primary and secondary surge protectors ..... 51

Annex F (informative) Antenna feeds protection and RF surge suppression technology overview for communication sites ..... 52

Annex G (informative) Bibliography ..... 56

Copyright © 2005 IEEE. All rights reserved.


Copyright The Institute of Electrical and Electronics Engineers, Inc.
Provided by IHS under license with IEEE
No reproduction or networking permitted without license from IHS
Not for Resale

# IEEE Guide for the Application of Surge Protectors Used in Low-Voltage (Equal to or Less than 1000 V, rms, or 1200 V, dc) Data, Communications, and Signaling Circuits

## 1. Overview

### 1.1 Scope

This guide provides assistance in selecting the most appropriate type of surge protector for a particular data, communication, and/or signaling circuit application.

This guide is divided into six clauses. Clause 1 provides an overview and the scope of this guide. Clause 2 lists references to other standards. Clause 3 gives a description and the theory of the operation of surge protectors used in data, communications, and signaling circuit applications. Clause 4 and Clause 5 describe and interpret non-surge and active performance tests, respectively. Clause 6 discusses some general application principles.

This guide also contains normative Annex A, which provides a description and theory of operation of certain current-limiting devices that may be used in multiple-component surge protectors. Informative Annex B and Annex C supply examples of applications of surge protectors used in low-voltage data, communications, and signaling circuits. Informative Annex D provides guidance on the protection of digital subscriber line (DSL) systems. Informative Annex E supplies guidance on coordinating telecommunications primary and secondary protectors. Informative Annex F provides an overview of antenna feeds protection and radio-frequency (RF) surge suppression technology for communications sites. Informative Annex G contains a bibliography of the references used in developing this guide. The informative annexes provide additional information for understanding and using this guide, but they are not an essential part of the guide. This guide applies to surge protectors used in balanced or unbalanced data, communications, and signaling circuits with equal to or less than 1000 V, rms (Vrms), or 1200 V, dc (Vdc). The surge protectors covered are multiple-component series or parallel combinations of linear or nonlinear elements, packaged for the purpose of limiting voltage, current, or both.

Copyright © 2005 IEEE. All rights reserved.

Copyright The Institute of Electrical and Electronics Engineers, Inc.
Provided by IHS under license with IEEE
No reproduction or networking permitted without license from IHS
Not for Resale

This guide is intended to complement IEEE Std C62.36™-2000.[1] The definitions used in this application guide and the test methods standard are the same. For terms not defined in the guide or the standard, see *The Authoritative Dictionary of IEEE Standards Terms* [B12].[2]

This guide is not intended to apply to a packaged single-component gas discharge tube (GDT) or air gap arresters/protectors, which are covered by IEEE Std C62.42™-1992 nor to packaged single component thyristor surge protective devices, which are covered by IEEE Std C62.37™-1997.

### 1.2 Purpose

The purpose of this guide is to enable an understanding and an evaluation of the functions of the various types of multiple-component data, communications, and signaling circuit protectors in terms of particular applications. Consideration is given to the characteristics of multiple-component protectors and the concepts necessary to choose the appropriate product and to interpret its specifications.

### 1.3 Electrical environment

For a description of the electrical environment in which these protectors are intended to be used, refer to IEEE Std C62.42-1992, Clause 3.

## 2. Normative references

The following referenced documents are indispensable for the application of this guide. For dated references, only the edition cited applies. For undated references, the latest edition of the referenced document (including any amendments or corrigenda) applies.

IEEE Std C62.36™-2000, IEEE Standard Test Methods for Surge Protectors Used in Low-Voltage Data, Communications, and Signaling Circuits.[3, 4]

IEEE Std C62.37™-1997, IEEE Standard Test Specification for Thyristor Diode Surge Protective Devices.

IEEE Std C62.42™-1992 (Reaff 1999), IEEE Guide for the Application of Gas Tube and Air Gap Arrester Low-Voltage (Equal to or Less than 1000 Vrms or 1200 Vdc) Surge Protective Devices.

IEEE Std C62.64™-1997, IEEE Standard Specifications for Surge Protectors Used in Low-Voltage Data, Communications, and Signaling Circuits.

NFPA 70, National Electric Code® (NEC®).[5]

[1]Information on references can be found in Clause 2.

[2]The numbers in brackets correspond to those of the bibliography in Annex G.

[3]The IEEE standards or products referred to in this clause are trademarks of the Institute of Electrical and Electronics Engineers, Inc.

[4]IEEE publications are available from the Institute of Electrical and Electronics Engineers, Inc., 445 Hoes Lane, Piscataway, NJ 08854, USA (http://standards.ieee.org/).

[5]The NEC is published by the National Fire Protection Association, Batterymarch Park, Quincy, MA 02269, USA (http://www.nfpa.org). Copies are also available from the Institute of Electrical and Electronics Engineers, Inc., 445 Hoes Lane, Piscataway, NJ 08854, USA (http://standards.ieee.org/).


Copyright © 2005 IEEE. All rights reserved.
Copyright The Institute of Electrical and Electronics Engineers, Inc.
Provided by IHS under license with IEEE
No reproduction or networking permitted without license from IHS
Not for Resale

# 3. General theory of operation

This clause provides the description and theory of operation of surge protectors (also called surge-protective devices) used in low-voltage data, communications, and signaling circuits. These protectors comprise one or more series or parallel elements that limit excessive voltages, currents, or both, while maintaining the system operation to a given performance level.

These devices are used on electronic equipment where voltage and current surges on the signal line can cause system malfunction or failure. The devices have two distinct states: In the quiescent state, they are essentially transparent to the system; in the operated state, they provide voltage limiting, current limiting, or both. The devices are operated or self-triggered by the voltage or current surge and may also self-reset to their quiescent state.

Multiple-component surge protectors may contain voltage-limiting devices, which are connected in parallel with the terminals to be protected. They may also contain current-limiting devices in series with the terminals to be protected. Descriptions and theory of operation of certain voltage-limiting devices that may be used in multiple-component surge protectors can be found in IEEE Std C62.42-1992 and in IEEE Std C62.37-1997. Descriptions and theory of operation of certain current-limiting devices that may be used in multiple-component surge protectors are provided in Annex A. Multiple-component protectors may use voltage limiters that are not covered in IEEE Std C62.42-1992 and IEEE Std C62.37-1997, they may use current limiters that are not covered in Annex A, or both.

Numerous combinations of series and parallel components can be contained in surge protectors, and a comprehensive characterization is too complex to describe completely in this guide. Therefore, several examples of these combinations are given in 3.1 – 3.9 to describe these protectors and to illustrate how internal component interactions occur. This information is organized according to the six basic configurations defined in IEEE Std C62.36-2000. These configurations are illustrated in Figure 1.

Some of the description and theory of operation discussed in Clause 4 is common to many or all of the various configurations to follow.

## 3.1 General description

Each overvoltage (V) or overcurrent (I) protection element contained in the basic protector configurations may be a single component, or it may be a pair of parallel or series components for redundant, additive, or backup protection features.

Examples of the overvoltage protection elements are as follows:

- An air gap
- A GDT
- A solid state device
- A combination of these elements

Currently, three types of solid state components are used in surge protective devices that can also be used as stand-alone protection components. These are avalanche breakdown diodes (ABDs), metal oxide varistors (MOVs), and thyristor surge suppressors (TSSs). ABD and TSS components are manufactured with a silicon-based semiconductor technology. ABD components are two terminal devices that can be either unidirectional (one P/N junction) or bidirectional (two P/N junctions). They are nonlinear devices with a continuous voltage/current (V/I) characteristic curve in both positive and negative directions. TSS components are two- or three-terminal devices that can be either unidirectional, bidirectional, symmetrical, or asymmetrical. Their voltage/current (V/I) characteristic curve is defined by their ability to switch from a high-impedance (OFF-state) to a low-impedance (ON-state). Three-terminal TSSs are known as

Copyright © 2005 IEEE. All rights reserved.


Copyright The Institute of Electrical and Electronics Engineers, Inc.
Provided by IHS under license with IEEE
No reproduction or networking permitted without license from IHS Not for Resale

programmable devices connected to an external voltage source. MOV components are two-terminal devices that are symmetrical and nonlinear with a continuous voltage/current (V/I) characteristic curve. As a variation of a single-layer junction, MOVs are manufactured with a ceramic-based metal oxide material to form multiple junctions between the two terminals. These are known as multiple layer varistors (MLV).

Examples of the overcurrent protection element are as follows:

— A fuse
— A positive temperature-coefficient (PTC) thermistor
— A circuit breaker
— A heat coil
— A semiconductor
— A combination of these elements

The voltage-limiting device, in its quiescent state, should present a high resistance across the protected elements. The rated voltage should be greater than any voltages on the line during normal operation. Examples of such voltages are the dc supply voltage plus the peak of any superimposed signaling or ringing voltage. The current-limiting device should present a low resistance. The surge protector, in its quiescent state, should present low loss at transmission frequencies.

Selection of the voltage-limiting component with regard to current handling is determined by the nature of the surges likely to be encountered. If application of the protector is in a high lightning area, impulse life is an important factor. For exposure to contacts with ac power lines, or induction from nearby ac power lines, the alternating current life is important.

The protector elements and their interconnections are usually contained in a plastic or metallic housing, although they may also be openly mounted on a circuit board or other substrate. Electrical connections to the network and equipment to be protected may include screw terminals, lugs, pins, card-edge connectors, spring-loaded leaf or button contacts, insulation displacement terminals, or other means.

## 3.2 General theory of operation

The overvoltage device may consist of two separate or integral components in parallel to provide redundant, additive, or backup protection. Although two or more overcurrent devices may be safely employed in series to provide coordination, they are not intended to be placed in parallel.

For redundant protection, both components may be expected to be equally capable of performing the primary protection function. For example, GDTs placed in parallel should have approximately the same breakdown and energy-handling characteristics, such that if one failed to operate because of high-breakdown voltage, the other would take over the protective function completely. On the other hand, if one degrades into a low breakdown voltage mode, it would very likely continue to handle the overvoltage surges, and the other redundant GDT may not operate.

For additive protection, both devices are needed to meet the total protection requirement. Each device may be addressing a different function or fault.

For backup protection, the two devices are designed to operate at different overcurrent or overvoltage levels. The normal operating function for the primary device is to suppress an overcurrent or overvoltage condition at a predetermined level below the operating range of the secondary device. In the event of a malfunction (high-breakdown voltage or high-current interrupt level) of the primary device, the secondary device is intended to operate at a coordinated higher current or voltage. The secondary device is deliberately set to a higher level so that it does not interfere with the operation of the lower current or voltage primary device.


Copyright © 2005 IEEE. All rights reserved.
Copyright The Institute of Electrical and Electronics Engineers, Inc.
Provided by IHS under license with IEEE
No reproduction or networking permitted without license from IHS
Not for Resale

Figure 1[6] depicts various arrangements of voltage- and current-limiting components having two, three, four, and five terminals. The depicted arrangements and configurations are examples for discussion, and they are not intended to represent all possible arrangements or configurations of voltage- and current-limiting components.

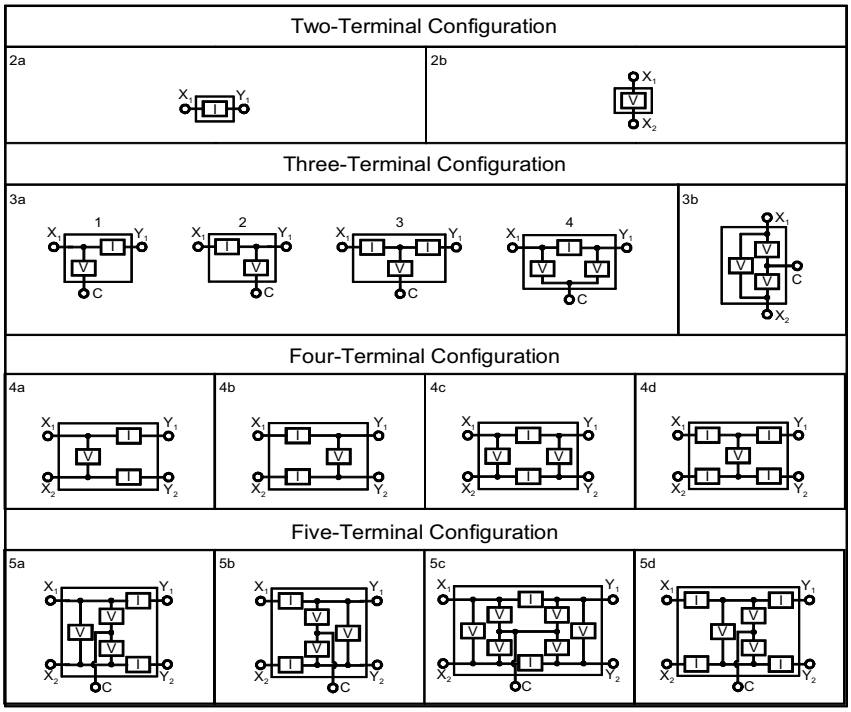


NOTE—I and V current- and voltage-limiting components, respectively.

**Figure 1—Possible internal arrangement of protector components**

## 3.3 Two-terminal basic configuration

A two-terminal multiple component overcurrent protector, such as depicted by configuration 2a (Figure 1), may include one or more overcurrent components arranged in series within a common enclosure.

A two-terminal multiple component overvoltage protector, such as depicted by configuration 2b (Figure 1), may include of one or more overvoltage components arranged in parallel within a common enclosure.

## 3.4 Three-terminal basic configuration

Configurations 3a1, 3a2, 3a3, or 3a4 of Figure 1 show arrangements of overvoltage and overcurrent protection components for single-conductor signal lines that have a *common ground*. The protector may consist of two or more overvoltage protection components connected in parallel with one other, as well as the overcurrent-protection components as shown, within a common enclosure.

Configurations 3a1 and 3a2 depict asymmetrical protector component arrangements, wherein the applied surge encounters the overvoltage component either before or after the overcurrent component. Applications define which side of the protector is to receive surges and which side of the protector is to be connected to protected equipment.

[6]Notes in text, tables, and figures are given for information only and do not contain requirements needed to implement the guide.

Copyright © 2005 IEEE. All rights reserved.


Copyright The Institute of Electrical and Electronics Engineers, Inc.
Provided by IHS under license with IEEE
No reproduction or networking permitted without license from IHS Not for Resale

Configurations 3a3 and 3a4 depict symmetrical protector component arrangements, wherein a protector is designed to handle surges entering from either X or Y terminals. If the 3a3 and 3a4 configuration protectors are intended to have fully symmetrical capabilities (i.e., if they are designed to handle the same surge energy at each terminal irrespective of how they are connected to the system or equipment to be protected), then all protection components may be of the same type and have the same energy ratings. If, on the other hand, the protector is to be applied in an asymmetrical situation in which expected surges imposed on the Y terminal are of much lower energy content than those expected at the X terminal, then the corresponding protection components are generally of much different types and energy ratings. In this latter case, the overcurrent components should include an impedance to ensure that the primary or higher energy overvoltage component operates on surges having more current flowing through the overcurrent component than the secondary overvoltage component can handle (configuration 3a4).

For two-conductor signal lines that have a *common terminal*, the configuration of overvoltage protectors are as shown in configurations 3b1, 3b2, and 3b3 of Figure 2. The protector may contain two or more overvoltage components connected in parallel, and arranged within a common enclosure. In configuration 3b1, the components are connected between each signal line and common. In configuration 3b2, the components are connected between each signal line and common and another component is connected between the two signal lines. In configuration 3b3, a single three-terminal component is shown.

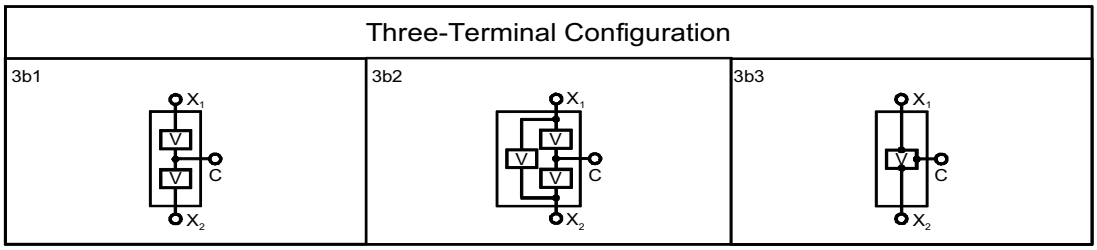


NOTE 1—I and V current- and voltage-limiting components, respectively.

NOTE 2—V multiterminal voltage-limiting component.

**Figure 2—Variations of configuration 3b**

The arrangements depicted serve only as examples for discussion and are not intended to represent all possible arrangements or inclusion of voltage and current-limiting components in any given configuration.

The configurations of 3b2 and 3b3 may be used to minimize the differential voltages caused by operation of the protection component. The components may be three-element GDTs or three-terminal solid-state components. Circuits that include GDTs may include shunt overvoltage air gaps for backup protection in case of venting of the hermetic seal of the GDT. When three-terminal solid-state components are used, these may contain either two or three solid-state chips that may be selected for matched conditions and molded in one package. Because solid-state components normally fail short-circuit, the backup-type components used with GDTs are generally not needed.

## 3.5 Three-terminal theory of operation

Configuration 3a protectors of Figure 1 limit either common mode overvoltage or overcurrent surges or both dependent on their intended design and use.

Configuration 3a1 opens the line to surge currents conducted by the protector, but it will maintain overvoltage protection at the X terminal. Configuration 3a2 opens the line to surge currents conducted by the protector and isolates the overvoltage component from further surge activity at the X terminal. In either case, the overcurrent component can be designed to limit surge currents driven by voltages too low in magnitude to operate the overvoltage component.


Copyright © 2005 IEEE. All rights reserved.
Copyright The Institute of Electrical and Electronics Engineers, Inc.
Provided by IHS under license with IEEE
No reproduction or networking permitted without license from IHS
Not for Resale

Configuration 3a3 requires that a surge be conducted by an overcurrent protective component before it appears at the overvoltage component, regardless of which terminal is surged. The overcurrent components may be selected so that the protector opens the line being surged and the overvoltage component is isolated from further surges on that line. The other overcurrent component may or may not isolate the overvoltage component from the opposite line.

In configuration 3a4, if the overcurrent protector components open the line, any high voltage present on either side of the protector is shunted to ground by the overvoltage protector component. The overvoltage components may have equal performance ratings for fully symmetrical applications, or they may be different components selected for additive or backup protection features in asymmetrical applications.

The overvoltage protectors of configuration 3b1 (Figure 2) limit the common-mode voltage (longitudinal voltage) to a low level and limit the normal mode (differential mode) voltage. However, the maximum differential voltage could be as large as twice the common mode, which would occur when the two-conductor signal lines carry transient voltages of opposing polarity. If the components used have breakdown values that are nearly equal, for coincidental voltage surges on both signal lines, the differential voltage generated at the output terminals is minimal. If large differences exist in breakdown levels, the resulting overvoltage imposed on the load may be a problem.

The three-terminal protector of configuration 3b3 provides protection for both signal lines within one component. The effect of a surge on one line is to provide a low-resistance path to ground, and to enhance the breakdown of the other line almost simultaneously, thereby minimizing the differential voltage.

The functional interaction of the primary overvoltage component with a backup component is determined by the application. Some voltage limiters should never short the line for longer than the duration of the surge, because to do so would cause an unacceptable malfunction of the signaling system. For telephone network equipment, shorting of the lines is permitted because a temporary shorted condition is acceptable. The protector continues to provide protection until manual restoration is completed. The short-circuit failure mode may be inherent in the primary component or may be obtained by the mechanical action of a secondary component such as a heat coil.

## 3.6 Four-terminal basic configuration

The four-terminal protector configuration (Figure 1) may provide either overvoltage or overcurrent protection or both for differential fault conditions dependent on its intended design and use.

In the case of a four-terminal protector, the overvoltage or overcurrent components are designed to protect a two-wire system and the protector does not have a common connection. As shown in configurations 4a and 4b of Figure 1, a current-interrupting device or current-limiting device is connected in each conductor of a two-wire circuit, and a voltage limiter is applied either at the input or at the output terminals. Redundant, additive, or backup overcurrent components may be added in series on the output side of the overvoltage component, as shown in configurations 4c and 4d.

## 3.7 Four-terminal theory of operation

If required to be present, the overcurrent protector of configuration 4a of Figure 1 limits abnormal currents in a load in the event of a differential overvoltage condition that has occurred at or within the load. The level of overcurrent protection depends on coordination of a current-limiting component and the abnormal current tolerance of the load.

Copyright © 2005 IEEE. All rights reserved.


Copyright The Institute of Electrical and Electronics Engineers, Inc.
Provided by IHS under license with IEEE
No reproduction or networking permitted without license from IHS Not for Resale

In the case of a differential fault, abnormal current flows through either side of the circuit, connected load, and opposite side. This condition can be controlled by one current-limiting component. In the case of a longitudinal fault seeking common through the load, the overcurrent component located in the conductor, experiencing the fault, limits the abnormal current without affecting the condition of the overcurrent component in the opposite line. A longitudinal fault has no effect on an overvoltage protector (configuration 4b) because the overvoltage protector has no connection to common.

Configuration 4b shows the addition of an overvoltage component in parallel with the load to limit overvoltage conditions.

When conduction of the overvoltage component occurs in configuration 4c, excessive current is shunted through the overvoltage component and away from the load. At the same time, the overvoltage condition is distributed along the incoming conductor impedance where the energy is dissipated. In the event of a sustained overcurrent condition, the overcurrent component either opens, diverts, or reduces current.

Configuration 4d shows two additional overcurrent components for the purpose of redundancy, additive, or backup features.

## 3.8 Five-terminal basic configuration

Configuration 5a of Figure 1, which is sometimes used as, but not limited to, a telephone central office or remote switch protector, has an overvoltage protection element connected between each line and common, and it may also have an overcurrent protector element connected in series with each line and placed on the protected-equipment side of the overvoltage components. A separate overvoltage protector component may also be connected between the lines for differential overvoltage protection.

Configuration 5b, which is sometimes used as, but not limited to, a telephone station secondary protector, has an overvoltage protection components connected between each line and the common terminal, and it has an overcurrent protection components connected in series with each line and placed on the surge input side of the overvoltage components. A separate overvoltage protector component may also be connected between the lines for differential overvoltage protection.

Configuration 5c is a six-component protector (or, alternatively, has eight components if X-terminal and Y-terminal line-to-line overvoltage components are included). Four overvoltage components connect between the four-line terminals and common or ground. Two overcurrent components connect between respective X-line and Y-line terminals, and they separate the overvoltage function components.

If differential overvoltage components are incorporated in the protector, they are connected line-to-line across the X-pair and the Y-pair terminals.

If the configuration 5c protector is intended to have symmetrical capabilities and handle the same surge energy, irrespective of terminal connection, then all line-to-ground overvoltage components may be of the same type and have the same energy ratings. If the protector is to be applied in asymmetrical situations because of different surge magnitudes imposed on different terminals, then the overvoltage components for the different terminals may be of different types and energy ratings.

In this latter case, the overcurrent component may also include an impedance to ensure the operation of the overvoltage component. The impedance limits the current conducted by the second overvoltage component and enhances the operation of the first overvoltage component by restoring the voltage across its terminals.

In configuration 5d, overvoltage components are each connected between one line and common. Both the first and the second overcurrent components typically have a complementary component in the opposite line.


--`,,```,,,,````-`-`,,`,,`,`,,`---
Copyright © 2005 IEEE. All rights reserved.
Copyright The Institute of Electrical and Electronics Engineers, Inc.
Provided by IHS under license with IEEE
No reproduction or networking permitted without license from IHS
Not for Resale

The six components may be mounted within a common enclosure, or they may be configured into modules that plug into one other to form the complete protection package.

## 3.9 Five-terminal theory of operation

Protectors of this type are intended to provide line-to-line and line-to-ground protection, and they may have the capability to interrupt abnormal currents through the lines, which might otherwise damage the protected equipment. The current-limiting component should be properly selected to ensure operation and prevent service wiring or equipment damage. Some protectors use a fusible link of wire of finer gauge, having faster fusing characteristics than that of the protected service wire, and the protector is thus said to be coordinated with the wiring.

Overcurrent protection components are selected such that they minimize series resistance and provide adequate overcurrent sensitivity for the application. Shunting-type overcurrent components, such as heat coils or some solid-state limiters, should have sufficient current-carrying ability to shunt the overcurrent such that the network can deliver without permanently opening the shunting device.

If the overcurrent protection component is a fuse, fusible link, or nonresettable heat coil, it or the overall protector will have to be replaced to restore service. If a resettable overcurrent element is used, the service may be restored manually or automatically reset after the overcurrent event has passed. In some cases, sufficient time should be allowed for the protector to reset.

Protectors of this type are also intended to shunt overvoltage surges appearing on lines $X_1$, $X_2$, $Y_1$, and $Y_2$ to the common reference terminal.

In the event of differential overvoltages appearing at the protector terminals because of unbalanced surges or the operation of only one of the line-to-common overvoltage components, the optional line-to-line overvoltage component provides additional surge protection to the equipment connected to the Y terminals.

If the line-to-line component is designed to limit at a voltage lower than the line-to-common components, it may then operate to protect the equipment from abnormally high differential voltages before the second line- to-common component operates.

Overvoltage component operation, if sustained by a power line contact or similar event, may cause sufficient current to pass through the overcurrent component to cause it to operate. Such intercomponent coordination is designed to prevent damage to the multielement protector.

In the case of configuration 5b, and possibly 5d, it should be noted that if the overcurrent protector components open the line, any high voltage present on the $X_1$ and $X_2$ terminals of the protector will remain on the line or the energy will be dissipated by other protectors or impedances of the network. Depending on the application, this condition may or may not be desirable.

In the case of configuration 5a or 5c, if the overcurrent protector components open the line, any high voltage present on the $X_1$ and $X_2$ terminal side of the protector will be shunted to ground by the overvoltage protector component.

Some multiple-component protectors use a thermal overload feature to prevent damage or a fire hazard from excess heat. Sustained overvoltages applied to the network cause the overvoltage component (air gap, GDT, or solid-state component) to operate and heat. The excess heat is thermally coupled to a mechanical, metallic alloy, or plastic component that melts or operates and allows electrical contacts to close. These contacts then bypass the overvoltage component and connect the lines to common.

Copyright © 2005 IEEE. All rights reserved.


Copyright The Institute of Electrical and Electronics Engineers, Inc.
Provided by IHS under license with IEEE
No reproduction or networking permitted without license from IHS Not for Resale

Operation of an overvoltage component, if sustained by a power line contact or similar event, may generate sufficient heat in that component to cause the overcurrent component to operate if the latter is thermally coupled to the overvoltage component. For example, if a sustained overvoltage condition is applied to the circuit, the air gap, GDT, or solid-state overvoltage component will operate and overheat, which melts the solder of the heat coil. The heat coil's spring-loaded action then closes a switch that short-circuits the overvoltage component, connecting line to common. The protector then cools to a safe temperature, which dissipates the power caused only by contact resistances.

## 4. Protector characteristics: nonsurge performance tests

This clause gives guidance on the applicability of the nonsurge performance tests for surge protectors used in low-voltage data, communications, and signaling circuits. A protector should not adversely affect the normal operating conditions of a system to which it is connected. The nonsurge performance tests may be used for initial characterization of protectors, and they may form the basis for assessing a surge protector for damage after the active performance tests from IEEE Std C62.36-2000 have been performed. Before using this clause, it is important to have an appreciation of the normal operating conditions of the application.

### 4.1 Rated voltage test

The purpose of this test is to verify that the surge protector can be used continuously at a specified maximum voltage, frequency, and temperature without undesirable signal distortion, undesirable power loss, or failure. For a given application, under normal operating conditions, the maximum operating voltage applied to a protector should be identified, and system performance should not be affected by the use of the surge protector at this maximum voltage. The rated voltage test is applicable when overvoltage (shunt) protection is employed between terminals of a signaling circuit, where excessive leakage current in the protector may affect circuit performance. An example is a telecommunication application in which the ringing voltage used for signaling exceeds the voltage used during transmission of data. A surge protector that performs satisfactorily under transmission conditions may limit or distort the higher ringing voltage. When specifying the maximum voltage across the protector during the ringing interval, any extraneous voltages (e.g., induction from power lines) should be considered.

### 4.2 Rated current test

This test is conducted to verify that a surge protector does not degrade normal circuit functions while carrying the rated current. The protector is tested at the specified rated current.

While carrying continuous current under normal operating conditions, a surge protector should not

— Degrade normal circuit functions

— Generate temperatures that are excessive for any component in the protector or for any materials in proximity to the protector

If used at currents that are above the rated current, series overcurrent devices may overheat under continuous current conditions causing degradation of circuit functions (e.g., high-impedance, open-fuse, tripped PTC) or excessive temperatures on insulating materials.


Copyright © 2005 IEEE. All rights reserved.
Copyright The Institute of Electrical and Electronics Engineers, Inc.
Provided by IHS under license with IEEE
No reproduction or networking permitted without license from IHS
Not for Resale

## 4.3 DC series resistance test

For an application in which the surge protector provides overcurrent protection or only provides a through-link function, this test gives a measure of its series resistance. This test is applicable if the type of protector used introduces a resistance in series with the line. The dc series resistance is measured using a continuous current having a value that is appropriate for the application. The current source is applied to the relevant terminals of the surge protector, and the voltage across the terminals is measured. The dc resistance is then calculated as the quotient of the voltage drop and specified current (e.g., 100% rated current, 80% rated current, etc.).

## 4.4 Standby current and insulation resistance test

Standby current is the continuous current that is conducted between specified terminals of a surge protector when applying a specified dc voltage across these terminals. The insulation resistance is the calculated result of dividing the applied voltage by the measured standby current. This test usually applies across terminals that are intended to be a high resistance such as on a voltage limiter or insulation. All protector terminals not being measured should be left completely disconnected during the measurement, so that other current leakage paths, if present, are not inserted into the measurement circuit. The standby current can also be measured between the external surface of the protector housing (sometimes wrapped in metallic foil) and the terminals. The results of this test indicate whether the protector contains an undesirable leakage current path, which would interfere with normal circuit operation or pose a safety hazard. The standby current of a surge protector may depend on the magnitude of the applied voltage, polarity of the applied voltage, ambient temperature, and humidity.

This test is meant to be a steady-state measurement, so the capacitance of the surge protector should be allowed to charge to the applied voltage before the current is measured. Any additional capacitance from the test circuit wiring and components may require even longer settling times. For some devices, such as spark-gap devices, up to 100 ms may be needed for the gap to stabilize and reach steady state.

As the applied voltage approaches the rated voltage of the device, the standby current of the device tends to increase. When measuring the standby current, the magnitude of the applied voltage should not exceed the rated voltage of the protector (4.1), because the protector may be significantly conductive at or above its rated voltage. The magnitude of any system dc bias voltage used during normal circuit operation should be considered as at least one voltage used to measure the standby current of a protector.

With some solid-state surge protective devices, the standby current is relatively constant over a large part of the applied voltage from zero to the rated voltage. Therefore, the calculated insulation resistance increases as the applied dc voltage increases, or conversely, the calculated insulation resistance decreases as the voltage decreases, even though the leakage current is not changing. The needs of the protected circuit should be considered when determining whether to specify either standby current or insulation resistance of the protector.

The standby current can also be affected by ambient temperature and humidity, and different types of protection devices react differently to these conditions. In particular, the standby current of solid-state surge protective devices increases as the device temperature increases. On the other hand, the standby current of surge protectors incorporating air gaps (carbon blocks or GDTs having backup air gaps) can increase as the relative humidity of the nearby atmosphere rises. Moisture condensation inside these types of protectors may bridge the gap, thereby providing a leakage path for current.

The standby current of a protector can also be dependent on the polarity of the applied test voltage. It can be particularly true for solid-state bidirectional thyristor surge protective devices.

Copyright © 2005 IEEE. All rights reserved.


Copyright The Institute of Electrical and Electronics Engineers, Inc.
Provided by IHS under license with IEEE
No reproduction or networking permitted without license from IHS Not for Resale

The standby current of the device is sometimes used as an indication of the condition of the device, especially as the device ages. The standby current can change with time, temperature, environment, bias, and exposure to repeated electrical surges. For instance, the electrodes of spark-gap devices (carbon blocks or GDTs) can melt from the high temperatures produced by the spark formed during the overvoltage condition. The spark can then spray the molten electrode material onto the surfaces surrounding the gap, eventually depositing enough material to form a current-leakage path across the gap. Some solid-state devices may also deteriorate with repeated surges; some may be sensitive to surges having a very steep current slope (*di/dt*).

Finally, any protector can contain internal contaminants or can collect surface contamination, which possibly leads to the formation of a current leakage path. For this reason, protector housings are often designed to have convoluted surface paths between their terminals to minimize the risk of leakage path formation over time. Because of concern about contamination, consideration should be given to using a voltage source of specified limited short-circuit current capacity. Current is limited to levels available in the application to avoid possible disturbance of any contaminants on or in the device under test. The intention of this testing is to detect the contamination, and not to remove it unless the available current in the application would have done so.

## 4.5 Capacitance test

Protectors have varying amounts of capacitance between their terminals. The amount depends on characteristics of the devices used for voltage limiting or current limiting and on physical dimensions of the package. For example, a voltage-limiting protector of configuration 3B has capacitance between terminals $X_1$ and $X_2$, $X_1$ and C, and $X_2$ and C. The capacitance between terminals $X_1$ and C may differ from that between $X_2$ and C, which results in a shunt capacitive imbalance; the capacitance between $X_1$ and $X_2$ may differ from either of the other two. Protectors of configurations 4 and 5 often contain a combination of elements producing terminal impedances that are a combination of resistance, inductance, and capacitance. For such protectors, an insertion loss test (see 4.7) may be more meaningful than a capacitance test.

Because capacitive reactance is an inverse function of frequency, higher transmission frequencies on a protected line cause a protector of given capacitance to constitute a lower bridging impedance. Therefore, the capacitance of the protector should be selected to be low enough to not affect transmission at the highest frequency to be used.

Excessive capacitance may introduce degradations such as signal attenuation (insertion loss), pulse-shape distortion (e.g., in digital transmission systems), echo (return loss), or propagation delay. Capacitive imbalance may add to the susceptibility of a system to interference from radiated noise, or it may increase radiated emissions from the system.

Because capacitance may vary with applied signal and dc bias voltage, the capacitance test should be conducted using voltages determined by the application.

## 4.6 Inductance test

Protectors have varying amounts of inductance between their terminals. The amount depends on characteristics of the devices used for voltage-limiting or current-limiting, and on physical dimensions of the package. For example, a current-limiting protector of configuration 4 has inductance between terminals $X_1$ and $Y_1$ and between $X_2$ and $Y_2$. The inductance between terminals $X_1$ and $Y_1$ may differ from that between $X_2$ and $Y_2$, which results in a series inductive imbalance. Protectors of configurations 4 and 5 often contain a combination of elements producing terminal impedances that are a combination of resistance, inductance, and capacitance. For such protectors, an insertion loss test (see 4.7) may be more meaningful than an inductance test.


Copyright © 2005 IEEE. All rights reserved.
Copyright The Institute of Electrical and Electronics Engineers, Inc.
Provided by IHS under license with IEEE
No reproduction or networking permitted without license from IHS
Not for Resale

Because inductive reactance is proportional to frequency, higher transmission frequencies on a protected line cause a protector of given inductance to constitute a higher series impedance. Therefore, the inductance of the protector should be selected to be low enough to not affect transmission at the highest frequency to be used.

Excessive inductance may introduce degradations such as signal attenuation (insertion loss), pulse-shape distortion (e.g., in digital transmission systems), echo (return loss), or propagation delay. Inductive imbalance may add to the susceptibility of a system to interference from radiated noise, or it may increase radiated emissions from the system.

Because inductance may vary with applied signal frequency and dc bias current, the inductance test should be conducted using frequency and bias determined by the application.

## 4.7 Insertion loss test

Insertion loss is the energy lost while passing through the protector. Every component of the system potentially reduces this fraction. In measuring insertion loss, consider that the protector may be used on a line that operates at high frequency. For example, frequency components may exist for asymmetric digital subscriber line (ADSL) at up to 10 MHz, very high data rate digital subscriber line (VDSL) at up to 30 MHz, and versions of Ethernet at over 100 MHz.

Insertion loss is influenced by many factors. For example, if the characteristic impedance of the measuring system and the test object are not the same, then energy reflected by the impedance mismatch (measured as return loss) may cause the measured value of insertion loss to appear to be higher than it actually is. If the element causing insertion loss is other than a pure resistance (over the range of test frequencies), insertion loss is dependent on frequency. If the test object is nonlinear, a potential applied to it (bias) may change the insertion loss. Placing the test object in a magnetic field may have similar effect. The insertion loss may be sensitive to environmental conditions such as temperature and humidity.

Insertion loss is an important determinant of system performance. In some cases, insertion loss is beneficial: A minimum insertion loss is required to prevent “singing” on a plain-old telephone service (POTS) and may be required to ensure the stability of line-drive amplifiers. But generally insertion loss is detrimental, and often system specifications, such as IEEE Std 802.3™-2005 [B13] for Ethernet, set a maximum value.

Insertion loss is a complex number, the real part of which increases with frequency for passive components. An important passive component is wire, in which insertion loss is proportional to the product of frequency and distance. So for a given insertion loss, higher operating frequencies are coupled with shorter distance. For example, DSL systems are often characterized by families of curves that show the range versus frequency (in form of data rate), for a given insertion loss.

The system budget for insertion loss must be allocated among the components that make up the system, including the wire (in most systems) and the protectors. So if a protector has a high insertion loss, less loss budget will be left for the wire and other components. Considering the characteristics of wire, the impact of protector insertion loss on system performance is a reduced data rate, reduced range, or both. For more information, see Chrysanthou and Parente [B10].

## 4.8 Phase shift test

The phase shift test measures the presence of constant phase intercept distortion, momentary phase hits, and phase jitter on balanced transmission lines, which is caused by insertion of a surge protector into the signal path. The time difference between the two voltage wave shapes as they pass through the zero reference line is converted into degrees or radians according to formulas specified in the test.

Copyright © 2005 IEEE. All rights reserved.


Copyright The Institute of Electrical and Electronics Engineers, Inc.
Provided by IHS under license with IEEE
No reproduction or networking permitted without license from IHS Not for Resale

Phase intercept distortion, a constant phase shift to all frequencies present in a particular band, will affect any signal in which preservation of the phase relationship in the transmitted wave shape is important. With phase shift-keyed modems, the phase change introduced by a carrier system or associated surge protectors may affect the ability of the receiving modem to perceive the phase changes from the transmitting modem that contains data transmission information.

Phase hits are sudden changes in phase of the transmitted signal. Characterization often includes determination of magnitude in degrees, duration, and number in a fixed period of time. Momentary phase changes greater than 20 degrees are typically of concern in the operation of telephone systems. Measurement of phase shifts is complicated by the effect impulse noise spikes have on most phase shift detectors. Hence, use of an oscilloscope (as required in the test) is of paramount importance in determining whether a surge protector introduces phase hits.

Various sources cause the instantaneous zero crossings of a signal to oscillate: ripple in the dc power supply associated with long-haul carriers, incomplete filtering of image sidebands in short-haul carriers, and 20 Hz ringing currents. Phase jitter in excess of 10 degrees is typically of concern in the operation of telephone systems.

It is important to adjust the voltage level and frequency of the signal as required for the application. Some applications provide a bias voltage or bias current, or both, to the load and, therefore, to the surge protector. The magnitude of any applied bias voltage or current can contribute to additional phase intercept distortion, momentary phase hits, or phase jitter.

## 4.9 Return loss test

The return loss test measures the extent of impedance mismatch in a communications channel, which causes power to be reflected back to the signal source when a surge protector is inserted in a matched transmission line.

During testing it is important to adjust the voltage level and frequency of the signal as required for the application. Some applications provide a bias voltage or bias current, or both, to the load, and, therefore, to the surge protector. The magnitude of any applied bias voltage or current may contribute to additional return loss.

## 4.10 Longitudinal balance test

The longitudinal balance test measures the degree of unbalance that the protector introduces on a balanced circuit, e.g., paired-conductor telecommunications lines. Any unbalance introduced by the protector could influence the susceptibility of the protected circuit to sources of induced noise. Typical noise sources include, for example, power lines, power conductors for electric railroads, and amplitude modulation (AM) radio stations. Currents that travel in the same direction on both conductors are referred to as longitudinal (i.e., common mode) currents. As these currents enter the protector, any difference in the series (i.e., between the input and output terminals) or shunt (i.e., between the input terminals and the ground or common terminal) impedances in the protector will cause the currents appearing on the output of the protector to be unbalanced. If the currents are unbalanced, a metallic (i.e., normal or transversal mode) voltage can occur across the pair at the terminating equipment.

The termination impedance of the protected circuit will determine whether the differences in the series or in the shunt impedances are more significant. In case of a low-impedance termination to ground, such as at the telephone exchange, the difference in series impedances will determine the degree of imbalance. Conversely, shunt impedance differences determine the degree of unbalance at high termination impedances to ground, such as at the telephone subscriber end.


Copyright © 2005 IEEE. All rights reserved.
Copyright The Institute of Electrical and Electronics Engineers, Inc.
Provided by IHS under license with IEEE
No reproduction or networking permitted without license from IHS
Not for Resale

The test is a measure of the effect of the asymmetry of the impedances in series with the conductors or to common terminal at the input signal terminals. Thus, the impedances in series with the input and output terminals or between the signal terminals and common terminal should not differ substantially from each other. If these impedances differ or change over the life of the protector, normal-mode noise may be introduced. Impedance asymmetry can also result from shunt component nonlinearities as system bias voltage and longitudinal noise voltage combine. Thus, it is important to ensure that during testing, the protector is tested at the system bias voltage and with the anticipated longitudinal source voltage for the intended application. The level of the unbalance that can be tolerated is system-dependent and is usually frequency-dependent.

## 4.11 Pulse mask test

The shape of the injected pulse is distorted as the pulse traverses the transmission system. To ensure that a pulse representing a “mark” injected into a system at the transmitting end will be properly interpreted as such at the receiving end of the system, the shape of the injected pulse must be controlled, which is the reason for the pulse mask test.

The pulse mask test is used to assess the effect of a protector on baseband digital systems. Baseband digital systems are those that employ time-series modulation, such as the alternate mark inversion (AMI) scheme used in T1 systems, or the two-level binary code (2B1Q) used in ISDN systems. The mask consists of the upper outline and a lower outline. To pass the pulse mask test, no part of the measured pulse can fall outside of the upper outline, or inside the lower outline.

An example of the application of the pulse-mask test can be found in ANSI T1.601 for ISDN [B2] or ITU-T G.703 [B14] for a variety of digital systems.

Because the electrical properties of a protector interact with the system in which it is installed, the insertion of a protector that has passed a pulse mask test, into a system that has also passed a pulse mask test before the insertion of the protector, may not necessarily result in a protected system that passes a pulse mask test.

As an observation, another type of mask called the power spectral density (PSD) mask is used in some standards to control both time-series modulated systems and modulated-carrier systems (e.g., ADSL). The PSD mask is entirely different from the pulse mask, and it is not considered in this standard.

## 4.12 Rise and decay time test

Insertion of a surge protector in a digital transmission system may change the signal’s rise time, decay time, or both. This change in the signal-wave shape may result in errors in signal reception.

The change in rise and decay time that can be tolerated is a function of the signal level at the surge protector input, the characteristics of the transmission line connecting the surge protector output to the receiver input, and the characteristics of the receiver. The change in rise and decay time is caused by the series and parallel reactances or nonlinearities of components that constitute the surge protector.

## 4.13 Bit-error rate test

A bit-error rate (BER) test is done to assess the ability of a digital system to transmit a random string of binary symbols without error. Most BER test sets are meant to be used with network interface devices (e.g., modems), not as stand-alone equipment. For this reason, the BER performance of the transmission segment of the system is greatly dependent on the type of modem used. Test results should be evaluated with that caveat in mind. BERs are not additive, so that if component #1 has a BER A and component #2 has a BER B, the BER of component #1 in series with component #2 is generally not A + B.

Copyright © 2005 IEEE. All rights reserved.


Copyright The Institute of Electrical and Electronics Engineers, Inc.
Provided by IHS under license with IEEE
No reproduction or networking permitted without license from IHS Not for Resale

A BER test may be performed on a surge protector to assess the potential effect of the protector on the BER of the digital system. However, the BER is a system parameter, and other factors in addition to that of the protector may influence the BER performance. Such factors include impulse noise, crosstalk, and electrical characteristics of the cable. Because protectors may significantly affect the BER of a system, the system BER should be assessed with protectors in place.

## 5. Protector characteristics: active performance tests

This clause gives guidance on the applicability of the active performance tests for surge protectors used in low-voltage data, communications, and signaling circuits. These tests demonstrate the ability of a surge protector to perform its intended function.

Before implementing this clause, it is important to have an appreciation of the surge protection requirements of the application.

### 5.1 DC-limiting voltage test

A dc-limiting voltage is the highest protector voltage reached by a slowly rising applied input voltage at any current up to, and including, a specified current. Unless otherwise specified, a rate of rise not exceeding 2 kV/s is used for this test. Limiting voltages of many surge protectors will only vary slightly when the rate of rise is less than 2 kV/s.

In general, dc-limiting voltage should be high enough not to interfere with the normal operation of equipment to be protected. If the dc-limiting voltage is too high, the protector will not protect the circuit. DC-limiting voltage should be low enough that limiting will occur before a low-frequency voltage can rise to destructive magnitudes.

Low dc-limiting voltage is of concern when the crest value of the sum of the system operating voltages and any permissible low-frequency extraneous voltages (for example, induction from power lines) approach the lower limit dc-limiting value of the protector. Should the crest value exceed the dc-limiting voltage, interruption of the transmission or signaling on the circuit will occur.

During its lifetime, a surge protector may be exposed to many transients, which will cause deterioration of its characteristics. This deterioration is usually noticeable by the reduction of its dc-limiting voltage. It may be accompanied by a degradation of other parameters, such as insulation resistance and impulse voltage.

### 5.2 Impulse-limiting voltage test

The impulse-limiting voltage characterizes the ability of a surge protector to limit fast-rising voltage transients. The maximum impulse-limiting voltage is the highest voltage value attained by a surge of a designated wave shape and polarity applied across the terminals of a surge protector during the passage of impulse current.

The maximum limiting voltage must be less, by a suitable margin, than the withstand peak voltage capability of the component, or equipment, or circuit that is to be protected. In addition, the surge protector is expected to protect equipment or components used in telecommunications circuits from damage that may be caused by lightning and fault voltages. The equipment should be able to withstand the residual energies of the surge protector to avoid damage or dielectric breakdown. Thus, the equipment resistibility to surges and the let-through energy of the surge protector shall be compatible.


Copyright © 2005 IEEE. All rights reserved.
Copyright The Institute of Electrical and Electronics Engineers, Inc.
Provided by IHS under license with IEEE
No reproduction or networking permitted without license from IHS Not for Resale

ITU-T K.20 [B17], ITU-T K.21 [B18], ITU-T K.44 [B19], and ITU-T K.45 [B20] provide tests and criteria for telecommunications equipment located at Central Offices, access (remote terminals), and customer locations. Telcordia GR-1089-CORE [B25] contains power fault and lightning surge tests for network telecommunications equipment. ANSI/EIA/TIA 571A-1991 [B3] provides specifications for equipment at customer premises. Because the maximum equipment stress level may not occur at the maximum specified test level, testing may also need to be conducted at a lower test level.

IEEE Std C62.64-1997 requires that the impulse-limiting voltage test should be performed with the following rate of rise for the applied voltage:

— Between 100 V/s and 100 kV/s. This rate of rise corresponds to the rated voltage and leading edge of low-frequency (e.g., 60 Hz) surge voltages. At this rate of rise, the maximum impulse-limiting voltage should not be set lower than the rated voltage to avoid interference with the normal operation of the system.

— 100 V/μs and 1 kV/μs. These rate of rises correspond to fast-rising surges primarily caused by lightning or switching transients from nearby power lines. For more information, see Carroll [B5].

Table 5.2.1 of IEEE Std C62.64-1997 depicts different levels of impulse-limiting voltage. The impulse voltage-limiting level may be different at each rate of rise. The impulse-limiting voltage level of the surge protector should be selected to limit the surges before they exceed the surge withstand capability of the equipment.

The impulse-limiting voltage for protectors using some technologies may also be affected by the rate-of-rise of current. IEEE Std C62.64-1997 requires that the impulse current should be between 10 A and 100 A with 10/1000 μs waveform during the test. Other voltage and current waveforms are suggested in IEEE Std C62.36-2000.

The surge voltages induced into metallic cable pairs are common mode in nature. These common-mode voltages are converted to differential-mode (metallic) voltages by the asymmetrical operation of surge protectors, imbalance of the cable pair, or dielectric breakdown of the cable. The level of differential-mode voltages can be up to the maximum impulse limiting of the protector. Differential-mode voltages caused by the operation of the protector may interfere with digital services (e.g., DSL services) that are transmitted in differential mode, causing many bit errors. For more information, see Chrysanthou and Parente [B9] and Chrysanthou [B7].

## 5.3 Transition current test

Current-limiting devices are used to protect against relatively long excursions of abnormal current that are driven by voltages below the activation voltage of the voltage-limiting devices.

The transition current test measures the sensitivity of the current-limiting device(s) in a surge protector. The transition current is the point at which the current flowing through the current-limiting device is sufficient to cause it to change to its tripped state. Depending on the type of device used, the tripped state can be either high resistance, open circuit, or grounded circuit. In addition, depending on the technology employed, the devices may be designed to operate only once or repeatedly. Devices that are resettable are designed to return to their quiescent state after tripping. It is desirable, therefore, to compare the parameters of resettable devices that have been tripped with those that have not experienced excursions into their tripped state.

In all applications using current limiters, care should be taken to ensure that the transition current of the device in the application environment is above the maximum normal current of the circuit.

Copyright © 2005 IEEE. All rights reserved.


Copyright The Institute of Electrical and Electronics Engineers, Inc.
Provided by IHS under license with IEEE
No reproduction or networking permitted without license from IHS Not for Resale

Care should also be exercised to ensure that a current-limiting device has, in fact, tripped. In the absence of specific requirements, it is suggested that a device is considered to be in its tripped state when its resistance has increased at least 40 times its quiescent resistance. An exception would be any device that operates to ground a circuit such as a heat coil. It is recommended that the onset of transition for these devices be defined when a 10 m  impedance to ground is measured.

The transition current threshold of current-limiting devices is temperature sensitive. The transition current tests, therefore, should be conducted at the extremes of the ambient temperatures expected in the application. Also, resettable current limiters should be allowed to stabilize in their quiescent state between repeated applications of transient current.

Certain application configurations will require special considerations when testing the transition current of current-limiting devices. Multidevice packages and multiple protector applications such as those found in telephone central office distributing frames will influence a surge protector's transition current. Testing should take into account the ambient temperature increases of a device caused by the thermal interaction of adjacent devices and protectors, and air flow restrictions caused by the tight spacing of multiple protector blocks, especially when blocks are enclosed in cabinets.

## 5.4 Current response time test

The current response time test measures the time required for a surge protector's current-limiting protective device(s) to reduce the current passing through protected equipment to a specified level during an overcurrent condition. (Current response time is sometimes called trip time.) Factors that may affect the current response time are the overcurrent magnitude, method of mounting the device, and the environment immediately surrounding the device (including ambient temperature, nearby heat sources, and nearby heat sinks). Note that this test is not necessary for all surge protectors, particularly those known not to contain current-limiting protective devices.

In thermally activated devices, the current response time is inversely proportional to the square of the current passing through the current-limiting protective device. The power dissipated in the device ($I^2R$) increases as the conducted current increases, causing the device's temperature to rise (i.e., *self-heat*). If the conducted current is large enough, the temperature of the device will reach the critical value at which it is designed to change state, and reduce, divert, or interrupt the conducted current in the device. Because these current-limiting protective devices are usually placed in series with the equipment being protected, this state change also protects the equipment.

The most important factor affecting current response time is the magnitude of the current passing through the sensing devices. Higher currents cause more self-heating, which increases the device temperature at a faster rate. Adequate characterization of a protector's current response time may require measurements at many different current levels.

Because of the thermal nature of operation of some current-limiting protective devices, ambient temperature also affects the current response time. In general, the current response time decreases as the surrounding temperature increases. Devices that are already warm do not need as much time to reach their thermal transition point. Therefore, it is recommended that a surge protector's current response time be measured at the expected ambient temperature, as well as at extremes of the application.

For many applications, surge protectors contain two or more current-limiting protective devices in a single housing (e.g., a five-terminal telecommunications line protector). In addition, some applications have several protectors installed in a still larger enclosure, sometimes located closely together. Therefore, it may be appropriate to measure the current response time when one, some, or all current-limiting protective devices are energized simultaneously. Adjacent devices or protectors may interact with each other; energized units (individual devices or complete protectors) may increase the surrounding temperature,


-`,,```,,,,````-`-`,,`,,`,`,,`---
Copyright © 2005 IEEE. All rights reserved.
Copyright The Institute of Electrical and Electronics Engineers, Inc.
Provided by IHS under license with IEEE
No reproduction or networking permitted without license from IHS
Not for Resale

which shortens the current response time, and unenergized units may lengthen the current response time by absorbing more of the heat generated by the energized current-limiting protective device.

To conserve test effort, the current response time test can be performed with the transition current test (see 5.3) and before the current reset test (see 5.6).

## 5.5 Impulse reset test

The impulse reset test serves to verify that a voltage-limiting surge protector, when connected to a circuit simulating the actual application, returns to its normal operating mode after an impulse of specified open-circuit voltage and short-circuit current of specified wave shape has been applied to it. It is usually desirable that this return to the normal operating mode occur automatically so there is no interruption of service of the protected equipment; i.e., the surge protector should self-reset within a specified time period. A protector that does not reset, a condition sometimes called latch-up, usually shorts out the power and signal source it is connected to and requires a means to temporarily disconnect the power source so that the protector can reset. Latch-up could result in long-term interruption of transmission, the destruction of the protector, or both.

The ability of a protector to reset depends mainly on the type of surge-suppressive components employed, the ambient temperature conditions, the characteristics of the dc power source, and the magnitude and wave shape of the current impulse the protector conducts. The magnitude and wave shape of the conducted current are influenced by the open-circuit voltage of the impulse generator and by the characteristics of the device.

In general, if the voltage level of the power source connected to a protector is lower than the clamping or ON-state voltage of the surge protective device employed, the protector will reset after limiting an impulse. If the voltage level of the source is higher than the clamping or ON-state voltage of the surge protective device, then device characteristics, temperature conditions, and power source parameters have to be well understood.

Voltage-limiting protective devices can be divided into two main groups: clamping devices and switching (crowbar) devices. Clamping devices limit applied surge voltages to a certain specified voltage level and conduct the associated surge current at the clamping voltage. Avalanche junction semiconductors, Zener diodes, and metal oxide varistors are clamping devices. In general, a clamping device resets if the sum of the power source voltage and signal voltage is lower than its clamping voltage. Switching (crowbar) devices limit applied surge voltages to certain specified voltage levels, but once turned on with sufficient current, they enter a low-impedance ON-state and therefore have a low ON-state voltage. It is important to understand the characteristics of switching (crowbar) devices, the nature of the circuit they are connected to, and the type of impulses they are expected to pass to achieve reliable reset performance. GDTs and thyristor diodes are typical switching (crowbar) devices.

GDTs are manufactured in many variations, the main differences being the type of the fill gas, the gas pressure, the electrode spacing, and the electrode coating, all of which affect the ability of the spark gap to reset. Spark gaps are not as temperature dependent as thyristor diodes.

A thyristor diode's ability to reset is a function of its holding current, which is dependent on junction temperature. Therefore, the ambient temperature, the rise in junction temperature caused by the current surge, and the follow current of the power source and signal source are critical reset parameters. In general, a thyristor diode resets if the current conducted by the device is reduced to a level that is less than its holding current. The instantaneous holding current is reduced by the heating produced by the applied impulse. Protectors containing thyristor diodes should be tested for impulse reset at the expected ambient temperature, as well as at extremes of the application.

Copyright © 2005 IEEE. All rights reserved.


Copyright The Institute of Electrical and Electronics Engineers, Inc.
Provided by IHS under license with IEEE
No reproduction or networking permitted without license from IHS Not for Resale

Telecommunications systems using copper pair conductors to provide electrical power to fiber-in-the-loop systems place special demands on general-purpose surge protectors and require knowledge of every part of the system. The voltage and current levels on these types of lines may exceed those of standard telephone lines and can cause general-purpose protectors to latch-up. To prevent a latch-up condition, the maximum dc voltage and output power of the source must be considered as well as the V/I characteristics of the power source, either fold-back or rectangular. In addition, the type of surge protector and its location, the line resistance between the power source and the optical interface, and the addition of parallel capacitance to the general-purpose surge protectors will all determine whether a particular application is capable of resetting. For more information, see Chrysanthou et al. [B11].

Isolating devices of the test circuit that serve to isolate the impulse generator from the power source should be carefully chosen, because they may affect the reset behavior of the surge protective device. If the power source consists of a dc source, one or several blocking diodes of sufficiently high-peak inverse voltage rating can be employed. It is important to know that certain spark gaps, when used as isolating devices, will shorten or *chop* the wavetail of an impulse and not pass all surge energy through the protective device of the protector.

## 5.6 Current reset test

The current reset test is done to verify that surge protectors intended to provide resetting overcurrent protection actually return to their quiescent operating state after they have properly limited or diverted the transition current (see 5.3). For a resetting overcurrent protection device to reset, the device should be allowed to cool once the overcurrent condition has been removed. Factors such as ambient temperature, heat transfer conditions, magnitude of current after removal of the overcurrent, and the overcurrent magnitude and duration determine whether a particular device returns to its quiescent operating condition.

Resetting overcurrent protection devices are sensitive to ambient temperature, and higher ambient temperatures make it more difficult for these devices to reset. It occurs because the change in state of the device in response to an overcurrent is caused by thermal accumulation in the device (self-heating) caused by the overcurrent. Once the overcurrent is removed, the self-heating of the device is greatly reduced but not completely eliminated. There may still be enough device self-heating present, in combination with a high ambient temperature, to prevent a change back to the quiescent state. Therefore, the current reset test should be done at the maximum expected ambient temperature for the application. (Of course, this test may also provide useful information at other temperatures.)

Some resetting overcurrent protection devices do not actually reset unless the current conducted by an already activated device is reduced to well below the quiescent operating current level for a short period of time. In some cases, this reduction may be accomplished only by temporarily disconnecting the device from the circuit. Therefore, these types of resetting overcurrent protection devices may not be appropriate for some applications, particularly those that are continuously energized before, during, and after an overcurrent surge.

The higher the temperature reached by a resetting overcurrent protection device, the more difficult it becomes for it to reset. The longer a device is allowed to self-heat, the hotter it will become, until thermal equilibrium with the surroundings is reached. Therefore, the protector being tested should be allowed to reach a steady-state condition before the transition current is removed. In addition, larger currents will cause more self-heating and a hotter device. So, the transition current level used for the current reset test should be the highest expected for the application.


Copyright © 2005 IEEE. All rights reserved.
Copyright The Institute of Electrical and Electronics Engineers, Inc.
Provided by IHS under license with IEEE
No reproduction or networking permitted without license from IHS
Not for Resale

It may be interesting, or even necessary for some applications, to measure the time required for the resetting overcurrent protection device to return to its quiescent state. If so, it should be noted that the reset time of the device is affected by ambient temperature and heat transfer conditions. Because the device reset depends on whether the device can adequately cool, higher ambient temperatures result in longer reset times and lower ambient temperatures result in shorter reset times.

To conserve test effort, the current reset test can be done after the transition current test (see 5.3) and the current response time test (see 5.4). For more information, see Annex A.

## 5.7 AC life test

Under normal operating conditions, surge protectors usually do not encounter ac voltages of the magnitude that would originate from power lines. However, because telephone and other signal cables often share common facilities with the commercial ac power system, high currents associated with the power system can induce overvoltages in telephone and signal cables. Under real-world field conditions, accidents do occur, so a low-voltage surge protector should be able to withstand abnormal ac voltage.

Telephone and other signal circuits may share common facilities such as structures or direct burial trenches, and the possibility exists for contact between the power system and the communications system. It is sometimes referred to as a power cross. Therefore, abnormal ac voltages can originate from contact among power, data, communications, or signaling lines caused by storms (i.e., a branch or tree falls on overhead lines strung between poles, causing various lines to contact each other), motor vehicle accidents involving traffic lights or telephone poles, or construction equipment digging into underground lines.

Another source of abnormal ac voltage is power induction, which is electromagnetic coupling between power lines and signaling lines during power system fault conditions, or as a result of long runs with the lines in close proximity.

In general, power system-induced transients have a long duration (when compared with lightning-induced transients), lasting from a few milliseconds to several seconds. Little definitive data exist on the magnitude of these transients, but usually power contact is the most severe. In addition, steady-state currents from a few hundred milliamperes to several amps can exist from inductive coupling of long runs.

Typical test conditions are listed in Table 5 of IEEE Std C62.36-2000 and represent both high-current modes (as might occur during power contacts) and low-current modes (such as from induction). It may not be necessary to test all the conditions listed; a high-current and a low-current test may be sufficient.

The user should consider what failure criteria are appropriate. For example, it may be desirable for a protector not to fail but to provide continuous protection under mild conditions (to avoid being a nuisance); but under high-current conditions, they can fail in a mode that will still protect equipment connected to the protector’s output, without becoming a fire hazard.

## 5.8 Impulse life test

A measure of the durability of surge protectors is the impulse life test. Table 6 of IEEE Std C62.36-2000 suggests waveforms and currents to be used as well as the maximum time between test impulses. The individual application will determine the extent of life test requirements necessary.

The useful life of the protector is ended when degradation results in interference with transmission of signaling or when the protector arrester fails to protect. The impulse life test determines the durability of a surge protector. The purpose of the impulse life test is to determine the end-of-life point caused by either occurrence.

Copyright © 2005 IEEE. All rights reserved.


Copyright The Institute of Electrical and Electronics Engineers, Inc.
Provided by IHS under license with IEEE
No reproduction or networking permitted without license from IHS Not for Resale

Applications in areas of high lightning or switching incidence, or more severe exposure, may justify the use of surge protectors with high-impulse life characteristics.

Isokeraunic maps provide the mean annual number of thunderstorm days. Statistical data have been gathered giving stroke factors, that is, the number of strokes to ground per square mile. From the severity and incidence of lightning, the type of facilities, desired reliability of service, and the exposure to lightning, in addition to knowledge regarding nearby power switching operations, a determination can be made of the protector's life requirements.

Although lightning flashes occur in multiple strokes, usually averaging two to six strokes within a few tenths of a second, a standardized life test method has been accepted. Test results can be used to compare cost/performance tradeoffs and to indicate the durability of surge protectors. Failure criteria for this test are usually defined in terms of specified degradation in protector parameters such as standby current or insulation resistance, dc limiting voltage, and impulse limiting voltage.

Table 5.2.4.1 of IEEE Std C62.64-1997 provides preferred values of impulse life test currents and the expected life operations for each test current. The test current peak and waveform as well as the life operation should be selected based on the expected surge exposure of the protector. The exposure of the protector to surges primarily depends on the following:

— Type of the metallic cable connected to the protector, e.g., twisted-pair and coaxial cable

— Cable placement (aerial or buried)

— Cable length

— Grounding system (impedance, frequency of grounds, etc.)

Traditional telephony service is provided over twisted-pair cables of several kilometers in length. Several studies measured the expected surge currents and voltages on the twisted-pair cables. Fiber-in-the-loop uses fiber to the optical network unit (ONU) and provides services from ONU to customer premises over drop cables. These cables may be shielded or unshielded twisted-pairs or coaxial cables that are less than 500 ft in length. The surge exposure of the drop cables is expected to be much less frequent than the exposure of the cables used in telephony service. However, the magnitude of the surge current in the drop cables is expected to be much higher and more severe.

Hybrid-fiber coax (HFC) systems use coaxial cables of a few kilometers in length to provide the services to the subscribers. The induced surge currents in the coaxial cables are different than those on twisted-pair cables. For coaxial cables in HFC systems, the induced surge voltages are expected to be lower, the magnitude of the induced surge current to be much higher, and its wave shape to be shorter than those appearing on cables used in telephony services.

## 5.9 Maximum single-impulse discharge test

The maximum single-impulse discharge test is a measure of the capability of a surge protector to withstand a single large current surge without experiencing a failure mode as described in Clause 9 of IEEE Std C62.36-2000. Nearby lightning strikes can produce such surges. In the absence of specified requirements, IEEE Std C62.36-2000 suggests waveforms of 8/20 µs or 10/1000 µs. Peak current magnitude of the single-test impulse is determined by the possibility of exposure to a severe impulse. The test is of the greatest importance in applications involving exposed facilities, which is located in areas of high thunderstorm activity or high soil resistivity.


Copyright © 2005 IEEE. All rights reserved.
Copyright The Institute of Electrical and Electronics Engineers, Inc.
Provided by IHS under license with IEEE
No reproduction or networking permitted without license from IHS
Not for Resale

### 5.10 Multiport coupling test

The purpose of the multiport surge protector is to provide surge protection of any combination of ac power lines, telecommunication paired-conductor cables, and coaxial or other circuits that serve a group of adjacent equipment within premises. The multiport coupling test of subclause 8.14 in IEEE Std C62.36-2000 is performed to verify that a surge that applies to one input port of the multiport surge protector does not result in a coupled surge that exceeds a specified amplitude or duration on the output ports of the multiport surge protector.

All power and communication cables serving the protected equipment are routed via the multiport surge protector, which provides a common terminal for equipotential bonding within its enclosure. Cables from the one or more telecommunication circuits enter the multiport surge protector at ports designated input, whereas protected equipment is connected to ports designated as equipment or output.

The multiport surge protector can be used as follows:

— Close to the building entry, on the customer side of the network interface and the ac power service entrance disconnect

— Within an area (e.g., room) of a house or building in close proximity to the protected equipment

At the network interface, the telecommunication paired-conductors have primary surge protectors in accordance with National Electrical Code® (NEC®) (NFPA 70), Article 800. At the service entrance, the neutral of the ac power is connected to the ground electrode via a grounding electrode (bonding) conductor as required by the NEC. The grounding terminal of the primary protector, and the paired-conductor cable shield, are also connected to the grounding electrode system via a suitable bonding conductor. These bonding conductors may be long, and excessive surge voltages can be developed between the telecommunication and power ports of terminal equipment. Communication equipment having an ac power interface may be exposed to surge voltages developed between the power and communication systems or between different communication systems. The effects of such surges are minimized by the equipotential bonding connected to the common terminal and the surge protectors used in the multiport surge protector.

Although the multiport protector minimizes the coupled surge, a residual surge voltage may pass beyond the multiport surge protector and reach the protected equipment. To prevent damage, the equipment must be able to withstand any residual surges on all of its ports, ac power, and communications.

## 6. Application of surge protectors used in low-voltage data, communications, and signaling circuits

The application of surge protectors to limit voltages and/or current to electrical apparatus requires the selection of a protector with suitable characteristics and the proper physical arrangement of the protector in the electrical circuit. It also requires the selection or design of equipment that will withstand the voltages, currents, and/or energy that bypasses the selected protector in the circuit configuration. An overall economic choice of both equipment and protectors should be made.

The basic electrical configurations of the most common protectors are illustrated in Figure 1. Depending on the type and arrangement of the internal components of the protector as shown in Figure 1 and the manner in which the protector is connected in the circuit, as shown in Figure 1, the protector may limit current, longitudinal (common mode) surge voltages, and/or metallic (transverse mode) surge voltages.

This subclause discusses some general principles involved in the application of surge protectors, using the example of a three-terminal voltage-limiting protector (Figure 1, configuration 3b), which is shown connected between a transmission line and the protected circuit in Figure 3. More detailed examples involving this configuration and others are given in Annex B.

Copyright © 2005 IEEE. All rights reserved.


Copyright The Institute of Electrical and Electronics Engineers, Inc.
Provided by IHS under license with IEEE
No reproduction or networking permitted without license from IHS Not for Resale

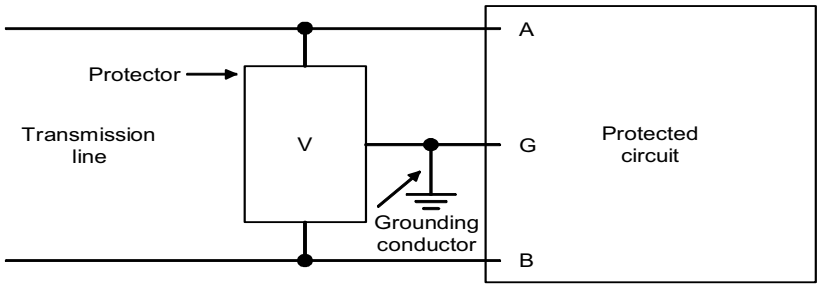


**Figure 3—Protection of circuit composed of two signaling leads and a ground terminal**

## 6.1 Operational compatibility

An unoperated surge protector should not interfere with transmission of information, control, or test signals. For example, the insulation resistance (see 4.4), measured between terminals A-G, B-G, and A-B of the protector at the voltages applied by the system, should be sufficiently high so as not to have a significant effect on signal transmission in the quiescent state,. Likewise, the capacitance (see 4.5) measured between these terminals should be sufficiently low so as not to have a significant effect on signal transmission at the expected transmission frequencies involved in the application.

Unwanted clipping of signals is avoided by specifying the minimum dc-limiting voltage (see 5.1) and impulse-limiting voltage (see 5.2) to be greater than the largest signal level, including any superimposed dc bias or any acceptable induced ac interference voltage, at the protected terminals. Unnecessary interruption of service of the protected equipment after the intended operation of a protector can be avoided by the use of a protector that self-resets within a specified time period (see 5.5).

## 6.2 Voltage limiting

The protector is intended to limit the magnitude of unwanted voltage transients to levels that are below the withstand threshold of the apparatus being protected (with suitable margin for aging of the apparatus). The fault modes of overvoltage protectors are open, resistive, or short. Depending on the application, one or more of the fault modes may create an unsafe or undesirable condition.

In the case of the protector shown in Figure 3, protection of the apparatus or circuit requires that the voltages between terminals A-G, B-G, and A-B all be limited. In many applications, surges are of like polarity with respect to ground, and the maximum voltage between terminals A-B does not exceed the impulse limiting voltage (see 5.2) of the protector between A-G or B-G. Accordingly, any of the three-terminal protector configurations of Figure 2 may be sufficient to protect all three terminals. If the application is such that metallic transients can occur without a longitudinal component, then the 3b1 three-terminal protector of Figure 2 may permit metallic voltages as high as the sum of the two limiting voltages. In this situation, a 3b2 or 3b3 three-terminal protector of Figure 2 may be necessary to limit metallic transients to lower values.


--`,,```,,,,````-`-`,,`,,`,`,,`---
Copyright © 2005 IEEE. All rights reserved.
Copyright The Institute of Electrical and Electronics Engineers, Inc.
Provided by IHS under license with IEEE
No reproduction or networking permitted without license from IHS
Not for Resale

## 6.3 Grounding and bonding

In Figure 3, the connection between the protector ground terminal and the local grounding electrode, the grounding conductor, has to be capable of conducting the sum of the currents flowing through the protector to ground as well as from other paths. The grounding electrode is likely to be the ground for the neutral of a power system, a buried metallic water pipe, building steel, a ground-rod or mat, or a combination of these. In any case, the electrode establishes a local ground reference that is different in potential from a remote location in the earth. Nearby metallic systems should be connected to the same grounding electrode so that the potential difference to the electrode, rather than to remote earth, determines the difference in potential between nearby systems. If separate electrodes are employed or required, they should be bonded together.

The impedance of the grounding conductor multiplied by the current conducted during a surge will determine the voltage difference between Point G of Figure 3 and other systems connected to the same electrode. If the protector is a 3b1 configuration (Figure 2), and the two voltage-limiting components of the protector operate, the difference in potential between terminals A-B-G will be the conducting voltage of the protector components, but all three terminals will be at an elevated potential with respect to the ground electrode as determined by the voltage drop in the grounding conductor. For example, if the grounding conductor is 9 m (30 ft) of 14 AWG (2 $mm^2$) copper wire, the total resistance will be about 0.08 Ω and the inductance about 12 µH. If the total surge current in the two voltage-limiting components is 200 A, with a rise time of 100 A/µs, the resistive component of voltage will be 16 V and the inductive component will be 1200 V.

The voltage appearing in the grounding conductor is minimized with short conductors. In the case of circuits that are bonded together, only that portion of the grounding conductor that is not common to the protected circuits contributes to the potential difference between circuits.

## 6.4 Location of protectors

The physical location of protectors should be such as to minimize the effect of grounding conductor impedance. For example, see Figure 4(a).

Care should be exercised to avoid an inadvertent hazard to the building in which the protected equipment is located.

Article 800 of NEC specifies the protection requirements for communications circuits (e.g., telephone). Section 800.30(A) requires that a listed protector shall be provided when the circuit is exposed to accidental contact with power conductors greater than 300 Vrms. Section 800.30(B) requires that the primary protector shall be located in, on, or immediately adjacent to the structure or building served and as close as practicable to the point at which the exposed conductors enter the building. Figure 4(b) illustrates the hazard that can result if this requirement of NEC, Section 800.30(B), is violated. For example, the sustained conduction of 50 Hz or 60 Hz current to the protector ground can overheat the interior wiring and create a fire hazard.

Copyright © 2005 IEEE. All rights reserved.


Copyright The Institute of Electrical and Electronics Engineers, Inc.
Provided by IHS under license with IEEE
No reproduction or networking permitted without license from IHS Not for Resale

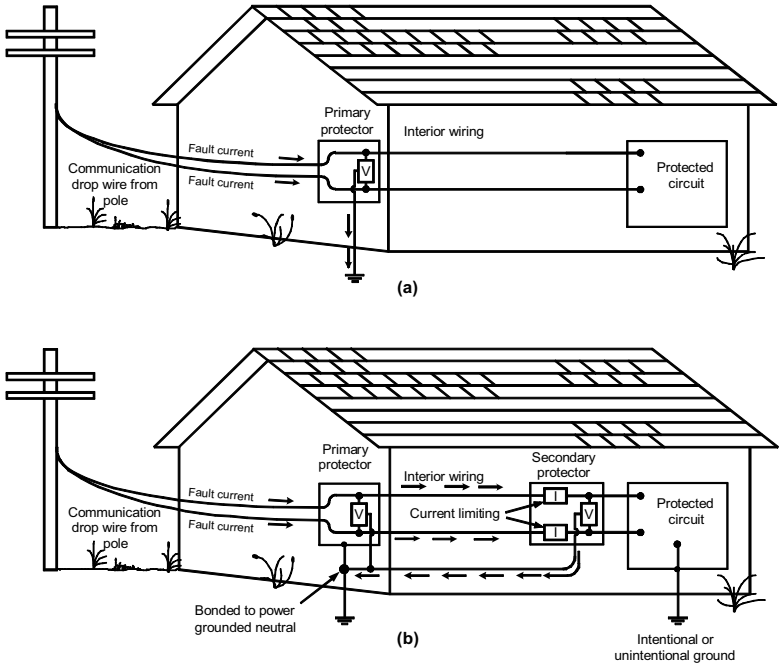


NOTE 1—Locate the primary protector as close as possible to the building entrance.

NOTE 2—Install a secondary protector on the equipment side of a primary protector.

**Figure 4—Avoiding the possible overheating of interior wiring**

Even when the primary protector is located at the building entrance, a low-longitudinal impedance-to-ground of the protected circuit can result in a hazard. The sustained conduction of 50 Hz or 60 Hz current to the protected circuit ground, caused by a voltage that is insufficient to operate the primary protector, can be large enough to overheat the interior wiring or the protected circuit, which would likely create a fire hazard. If a secondary protector is installed, as illustrated in Figure 4(b), to eliminate voltages in the grounding circuit, to induce overvoltages directly into the interior wiring, or to reduce overvoltages to a level lower than one that will cause the primary protector to operate, a fire hazard may still exist. The hazard may be reduced if the installation complies with NEC, Section 800-32. Section 800-32 requires that when a secondary protector is installed in series with the interior wiring between the primary protector and the protected circuit, it shall be listed as being suitable for indoor communications wiring, and incorporate means for, limiting current (and thereby the heating) in the interior wiring. In addition, the impedance of the interior wiring between primary and secondary protectors and the current-limiting means of the secondary protector may be sufficient to assure operation of the primary protector.

Article 830 of NEC, Network-Powered Broadband Communications Systems, specifies the protection requirements for network-powered broadband communications that provide any combination of multimedia including voice, audio, video, and interactive services through a network interface unit (NIU). Section 830-30(a) requires that primary electrical protection shall be provided when the circuit is exposed to accidental contact with power conductors greater than 300 Vrms. Section 830-30(b) specifies the possible locations of the primary protection, as follows:

— A listed primary protector is located on the cable external to and on the network side of NIU (see UL497 [B28]).

— The primary protection function is integral of, and contained in, an NIU listed as being suitable for the application for network-powered broadband communications networks (see UL497A [B29]).


Copyright © 2005 IEEE. All rights reserved.
Copyright The Institute of Electrical and Electronics Engineers, Inc.
Provided by IHS under license with IEEE
No reproduction or networking permitted without license from IHS
Not for Resale

— The primary protector is located on the derived (output) circuits of the NIU, and the combination of the NIU and the protector shall be listed as being suitable for the application for network-powered broadband communications networks (see UL497 [B28]).

## 6.5 Codes and standards

Where applicable, protectors used for protection of communications circuits should comply with the provisions of NEC, Articles 800 and 830 and/or ASC C2-1997 [B4]. In addition, the NEC addresses the location and grounding requirements for protectors on communications circuits and network-powered broadband communications systems. Typical safety test requirements are described in UL497 [B28] for primary protectors, in UL497A [B29] for secondary protectors, in UL497B [B30] for data line protectors, and in UL497C [B31] for primary coaxial protectors.

Copyright © 2005 IEEE. All rights reserved.


Copyright The Institute of Electrical and Electronics Engineers, Inc.
Provided by IHS under license with IEEE
No reproduction or networking permitted without license from IHS Not for Resale

# Annex A

(normative)

# Description and theory of operation of certain current-limiting devices

## A.1 Positive temperature coefficient devices

### A.1.1 Description

PTC devices are used in surge protectors to limit excessive current. They consist of two metallic electrodes separated by a material having a resistance versus temperature response similar to that shown in Figure A.1.The electrodes are fitted with a variety of terminations suitable for mounting on circuit boards, clip terminals, or sockets for incorporation in a protector. Figure A.2 illustrates, in a simplified manner, the functional components of a typical PTC device and its circuit symbol.

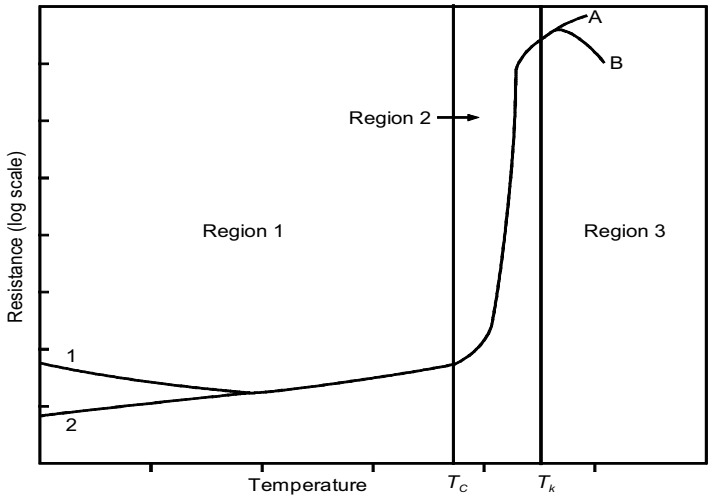


**Figure A.1—Resistance vs. temperature for a PTC device**


Copyright © 2005 IEEE. All rights reserved.
Copyright The Institute of Electrical and Electronics Engineers, Inc.
Provided by IHS under license with IEEE
No reproduction or networking permitted without license from IHS
Not for Resale

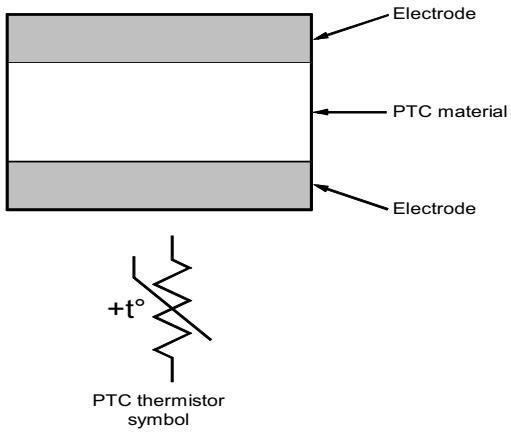


**Figure A.2—Functional components for PTC devices**

## A.1.2 Operation

### A.1.2.1 Device operation

PTC devices are characterized by a resistance versus temperature plot that has three regions, as illustrated in Figure A.1. In region 1, the device temperature is below a critical temperature $T_C$ and its resistance is low. In this region, the resistance has a negative temperature coefficient (NTC) characteristic if the device is ceramic (curve 1), or a PTC characteristic if the device is made from a conductive polymer (curve 2). This low resistance is called the base resistance. In region 2, the device temperature is above the critical temperature but below the upper knee temperature $T_k$. In this region, the resistance increases exponentially with temperature. In region 3, the device temperature is above $T_k$. Here, the coefficient of resistance may remain positive and resistance continues to increase with temperature (curve A), or the coefficient may become negative and resistance decreases with temperature (curve B). Curve A is characteristic of conductive polymer devices that have been cross-linked. Curve B is characteristic of ceramic PTC devices and conductive polymer devices that have not been cross-linked.

### A.1.2.2 Operation in a circuit

In a typical application, the PTC device is connected in series with a load. When current is conducted, $I^2R$ losses increase device temperature (device power generated curve; Figure A.3). At the same time, heat is lost from the device by radiation and conduction (power lost to ambient curve; Figure A.3). The temperature stabilizes at a level where power dissipated in the device is balanced by heat lost from the device by radiation and conduction. The device power-generated curve in Figure A.3 is relatively flat with temperature, until $I^2R$ heating causes the device resistance to enter region 2 (Figure A.1), where a slight increase in temperature causes the resistance to increase greatly. The peak in the device power-generated curve ($P_m$ in Figure A.3) occurs when the resistance of the PTC device equals the Thevenin equivalent source resistance of the circuit containing the PTC device. The power lost to ambient line is approximated by the linear relation

$$Hd = k(Td - TA)$$

where

$Hd$ is the heat dissipated (W)
$Td$ is the temperature of the device (°C)
$TA$ is the ambient temperature (°C)
$k$ is a dissipation constant for the device (W/°C)

Copyright © 2005 IEEE. All rights reserved.


Copyright The Institute of Electrical and Electronics Engineers, Inc.
Provided by IHS under license with IEEE
No reproduction or networking permitted without license from IHS Not for Resale

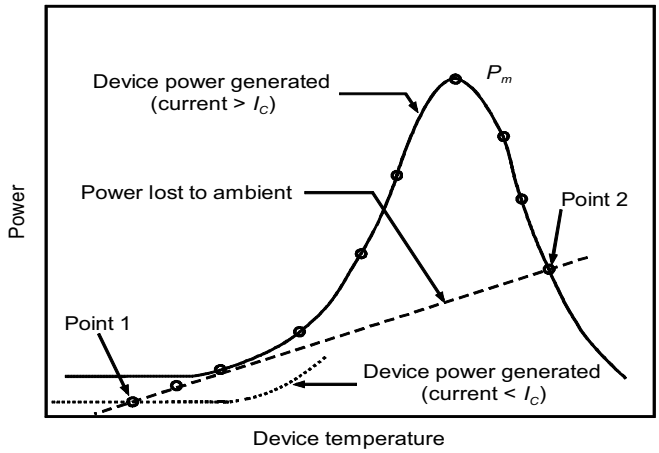


**Figure A.3—Power generated in the device and power lost by the device to ambient, as a function of temperature**

### A.1.2.3 Normal operation (rated current)

In normal operation, the PTC device is in its low, or base, resistance state. The base resistance is generally much less than the series load resistance. If, when power is applied, the current through the device is less than a critical value called the rated current ($I_C$), the power-generated curve lies below the power lost to ambient line, and the device stabilizes at a temperature only slightly above ambient (Point 1 in Figure A.3).

### A.1.2.4 Tripping action (transition current)

When a current in excess of $I_C$ is conducted, heat is generated faster than it is dissipated. In this case, the device power-generated curve lies above the power lost to ambient line, and the device temperature can stabilize only at a relatively high level (Point 2 in Figure A.3). At this high temperature, the device resistance is much higher than that of a normal load, so the current through the load is reduced to a value much lower than normal. This action, called tripping, protects the load from damage caused by overcurrent. The minimum current at which tripping occurs is called the transition current, or more commonly, the trip current. The path followed by power generated in the device as current is increased as shown by the large dots in Figure A.3. Note that increasing the ambient temperature lowers the power lost to ambient line. Because the device trips when the power generated in the device exceeds the power dissipated, and the device power lost to ambient is lower at higher temperature, less power needs to be generated in the device to cause tripping (curves labeled Ta' in Figure A.4). The equilibrium point after tripping at the higher temperature is Point 2. A PTC device will, therefore, trip when the ambient temperature is raised to the point where the power lost to ambient line falls just below the device power-generated curve. For this reason, PTC devices are sometimes mounted directly on a load to limit the temperature rise of that load.


--`,,```,,,,````-`-`,,`,,`,`,,`---
Copyright © 2005 IEEE. All rights reserved.
Copyright The Institute of Electrical and Electronics Engineers, Inc.
Provided by IHS under license with IEEE
No reproduction or networking permitted without license from IHS
Not for Resale

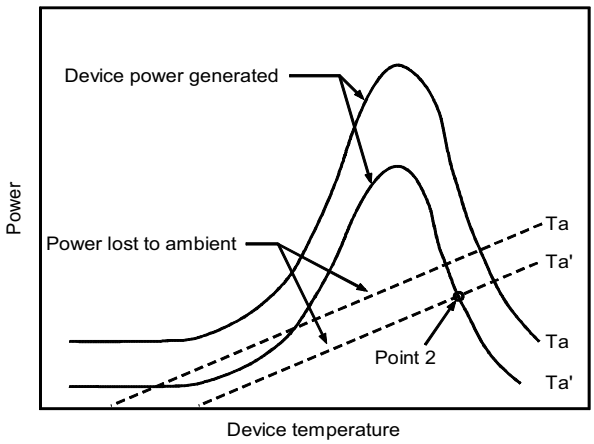


**Figure A.4—Power generated in the device and power lost by the device to ambient, as a function to temperature (Ta and Ta' are ambient temperatures where Ta' > Ta)**

### A.1.2.5 Current response time

The response time of a PTC device is inversely proportional to the difference between the rate at which heat is generated in the device and the rate at which it is dissipated. Response time can range from hundreds of seconds to a few milliseconds, as the current conducted by the device is increased from slightly above $I_c$ (heat generated is only slightly in excess of heat dissipated). Ordinarily, this delay time prevents PTC devices from tripping as a result of brief overloads.

### A.1.2.6 Reset

Whether tripped by high current or by high ambient temperature, a tripped PTC device generally remains latched in a high-resistance state as long as source power is maintained. Thus, for reset, power is usually removed from the device, and the device is allowed to return to its base resistance region. The exception to this rule occurs when the power generated in the device is always less than the peak of the device power-generated curve ($P_m$ in Figure A.3). In this case, the PTC device will automatically reset after a transient tripping condition, such as a short-circuit across the load. Because the reset time and current level of PTC devices are dependent on temperature, conditions such as mounting, airflow, and packaging, which affect the temperature of the device, should be considered.

## A.1.3 Application considerations

PTC devices are affected by heat, so it is important to verify that in the application, the devices will hold the maximum expected normal current of the system without tripping, at the maximum temperature specified for the system, with all heat sources generating their normal maximum output. It is also important to verify that the devices will trip on the minimum desired protection current, at the lowest temperature specified for the system, with all heat sources generating their minimum output.

Data and telecommunications systems often employ a two-wire circuit with PTC devices in both sides of the circuit. In these circuits, similarity in PTC device resistance (i.e., balance) may be required to reduce the amount of noise generated in the equipment in the presence of common-mode signals, such as those induced by ac power lines. In these applications, the PTC devices should be tripped, and then the tripping power should be removed. The system performance should be verified after the PTC devices have reset, typically one minute after the tripping power has been removed from the devices.

Copyright © 2005 IEEE. All rights reserved.


Copyright The Institute of Electrical and Electronics Engineers, Inc.
Provided by IHS under license with IEEE
No reproduction or networking permitted without license from IHS
Not for Resale

PTC devices are typically used in combination with overvoltage protection devices to protect equipment against those overcurrents that do not activate the overvoltage devices. (These low-voltage overcurrents are sometimes called *sneak* currents.) The overvoltage protection devices are usually located in the circuit between the PTC devices and the source of the surge. In that position, they protect the load from overvoltages and limit surges to less than the rated voltage of the PTC devices for surges that last long enough to operate the PTC devices.

Finally, because PTC devices are placed in series with the load, they introduce signal loss into the circuit. In the absence of any other effects, loss of signal decreases the rate-reach product of the system. Often this decrease is from relatively greater loss of signal at high frequencies, and therefore, the system should be tested at its highest frequency of operation. In addition, other factors such as bridge taps or strong local radio stations may cause loss of signal or increased signal-to-noise ratio at lower frequencies.

The operation of modems in their full duplex mode depends on a device called a hybrid. The hybrid separates the “send” and “receive” signals into two separate channels. The ability of the hybrid to perform this function depends on how well it is matched to the line impedance. Adding series resistance may improve this match, which in turn improves the signal-to-noise ratio of the system by reducing the amount of “send” signal that couples into the “receive” channel. This improvement in signal-to-noise ratio caused by improved hybrid performance may at least compensate for the reduction in signal-to-noise level from the added resistance in the system. So the effect of added resistance such as a PTC device could be to reduce system performance, to have no impact on system performance, or to improve system performance. To determine the net effect of adding series resistance, a complete system, including the transmission line, should be evaluated with the methods described in IEEE Std C62.36-2000.

## A.2 Bimetallic devices

### A.2.1 Description

A protection device using a bimetallic sensing element can be activated by current, temperature, or a combination of both. The device is placed in series or in parallel with the line. The contacts allow current to flow to the equipment until excess current or external temperatures heat the bimetallic sensing element to the trip point. It activates the contact and opens, or grounds, the line, removing power from the equipment. As the bimetal cools down, automatic reset occurs when the temperature reaches the reset point. Manual reset can be achieved through mechanical means.

### A.2.2 Theory of operation

The sensing element of a bimetallic device consists of a composite material made up of two or more metallic layers with different coefficients of thermal expansion. When subjected to an increase in temperature, the high expansion side will be under compression, whereas the low expansion side is under tension. These forces produce a moment that causes the element to bend. This action can be a creep action or a snap action that opens or closes a contact that controls current flow. Creep-action devices, which have a slow make or break, are generally acceptable for low-voltage (<24 V) applications, whereas snap-action devices can be used up to 600 V and 250 A. Heating of the bimetallic element can be achieved by an external heat source as well as through ohmic heating. Bimetallic elements can be made in a wide range of electrical resistance and physical configurations such that actuating currents from milliamperes to hundreds of amperes can be obtained. Because of the mass and physical movement required, the response time as well as cycle life cannot approach the performance of semiconductors. However, the fact that the bimetallic element is both the sensing element and the actuating element can make it a low-cost alternative for many applications.


Copyright © 2005 IEEE. All rights reserved.
Copyright The Institute of Electrical and Electronics Engineers, Inc.
Provided by IHS under license with IEEE
No reproduction or networking permitted without license from IHS
Not for Resale

### A.2.3 Application considerations

Performance of a bimetallic device is affected by the ambient temperature. At a given current, a device trips sooner at high ambients and takes longer to trip at low ambients. These changes in trip time must be considered in the final application.

Typically three methods connect a bimetallic device into a protection circuit, as follows:

— The bimetallic device is connected in series with the current loop. Excess current in the loop causes ohmic heating and actuating of the device, which opens the current loop. As the bimetal cools, it automatically resets, unless equipped with a manual reset device.

— The bimetallic device is thermally coupled to a heating element that is in the current loop. Excess current in the loop generates heat in the heater, which actuates the device. The bimetallic device may or may not reset automatically.

— Both heater and bimetallic device are in the current loop. Excess current causes ohmic heating of the bimetal as well as generating heat in the heater to actuate the device. This combination typically results in the fastest trip time and is used for low-current applications. This type of device is sometimes referred to as a combination device. As the bimetallic device cools, it automatically resets, unless equipped with a manual reset mechanism.

Overvoltage protection devices are usually located in the circuit between the source of the surge and the bimetallic devices. In that position, they protect the load from overvoltages and limit surges to less than the voltage rating of the bimetallic device.

Because all three methods employ contacts that open, or short, the protection circuit, a voltage and current interrupting-and-making capability is assigned to each device. This voltage value must exceed the voltage-limiting level of the overvoltage protection device. Care must be taken to ensure that the current interrupting-and-making capability of the bimetallic device contacts are not exceeded. These considerations are especially important if a dc power source is to be interrupted, because possible arcing is not extinguished by a periodic zero crossing of current, as in ac applications.

In some applications using *combination devices*, the rated current of multiple devices is verified while all devices are conducting the specified current. Simultaneously energizing devices in close proximity to one another raises the temperature near the devices faster and higher than if only one device is energized. The resultant higher ambient temperature should be taken into account so that the devices do not interfere with normal service by operating.

However, the transition current of combination devices is measured while only one device in the protector is energized. It is done to ensure that even the last unoperated device can operate by itself.

Those applications requiring multiple combination devices sometimes also require a certain similarity in resistance (i.e., balance) to reduce the amount of noise generated in the equipment during the presence of common-mode signals, such as those induced by ac power lines. A large imbalance may result in a significant and undesirable potential difference across the equipment, which can interfere with the equipment's normal operation.

Finally, combination devices are usually placed in series with the load, so they introduce signal loss into the circuit. If their resistance is too high compared with the load resistance, this loss may become unacceptable.

Copyright © 2005 IEEE. All rights reserved.


Copyright The Institute of Electrical and Electronics Engineers, Inc.
Provided by IHS under license with IEEE
No reproduction or networking permitted without license from IHS Not for Resale

## A.3 Heat coils

### A.3.1 Description

A heat coil is a device used to protect equipment from sustained overcurrent conditions. Heat coils are usually placed in series with the equipment to sense the level of current passing through the equipment. A heat coil normally releases a shorting mechanism when the current exceeds a predetermined level, as opposed to a fuse, which open-circuits when excess current is conducted. However, large currents can cause the heat coil to open-circuit like a fuse, and the shorting mechanism may or may not be released. Although manually resettable heat coils are available, a typical heat coil can operate only once, and it has to be replaced after activation.

Heat coils are typically used in combination with overvoltage protection devices to protect equipment against those overcurrents that do not activate the overvoltage devices. (These low-voltage overcurrents are sometimes called sneak currents). The overvoltage protection devices are usually located in the circuit between the source of the surge and the heat coils. In that position, they protect the load from overvoltages. They also limit overvoltages to within the voltage capability of the heat coils in the case where an overcurrent condition causes the heat coils to become open circuited. Heat coils are available for placement by themselves, or they can be placed in the same housing with the overvoltage protection device(s).

Heat coils are typically constructed by winding a length of high-resistance (heater) wire around a solder joint that holds a metallic tube to a metallic pin. In addition, this soldered assembly compresses a separate spring mechanism. Each end of the heater wire is connected (usually welded) to appropriate locations inside a protector such that normal operating currents and abnormal overcurrents pass though the wire itself. The melt temperature of the solder and resistance of the heater wire is selected by design to meet the rated current (nonoperate) and transition current (operate) specification requirements, as determined by the application. In selecting the melting temperature of the solder, consideration is also given to choosing a melting temperature low enough to prevent overheating of the plastic parts used in protectors, if such overheating would otherwise result from sustained overcurrents.

### A.3.2 Theory of operation

Overcurrents of sufficient magnitude and duration cause the high-resistance (heater) wire to melt the solder joint. In addition, sustained operation of an overvoltage component may generate sufficient heat to melt the solder joint. Typically, this process releases the compressed spring mechanism, which pushes the metal pin, through the tube, both usually at line potential until the pin makes contact with a third conductor, usually at ground potential. This action diverts the overcurrent away from the equipment, thereby protecting the equipment from the overcurrent.

Heat coils are characterized by three basic parameters: resistance, rated current, and transition current. The resistance of the heater wire, the melting temperature of the solder, the surface area of the solder joint, the volume of the solder, and the mass of the metallic tube, pin, and mating metallic contacts determine the performance of the heat coil. In general, the rated current and the transition current of a heat coil are inversely proportional to the heat coil's resistance, as observed by the descriptions of three types of frequently used heat coils listed in Table A.1.

--`,,```,,,,````-`-`,,`,,`,`,,`---


Copyright © 2005 IEEE. All rights reserved.

Copyright The Institute of Electrical and Electronics Engineers, Inc.
Provided by IHS under license with IEEE
No reproduction or networking permitted without license from IHS Not for Resale

**Table A.1—Typical heat coil ratings (20 °C)**

| Resistance | 3-hour rated current | 210-second transition current |
|---|---|---|
| 21.0 Ω max. | 150.000 mA | 250.000 mA |
| 4.0 Ω max. | 350.000 mA | 540.000 mA |
| 0.4 Ω max. | 1.200 A | 1.875 A |

Using the $I^2R$ power formula on the figures given in Table A.1, it can be observed that heat coil power dissipation of approximately 1 W will cause it to trip in 210 seconds and it will hold indefinitely at approximately 0.5 W. Using this as a guide, other resistance/current combinations can be selected. A heat coil is designed such that it does not activate at current levels at, or below, the rated current. A duration of 3 h typically is used to approximate the condition of continuous current and temperature stabilization. The transition current is the current level needed to release the shorting mechanism within the specified time period.

### A.3.3 Application considerations

A heat coil's performance is affected by the ambient temperature. Higher ambient temperatures make it easier for the solder to melt, so that both the rated current and the transition current of the heat coil decrease as the ambient temperature rises. Typical alloys used in heat coil solders melt at about 72 °C, and protectors employing heat coils may contain a packaging warning not to store above 55 °C.

Conversely, lower ambient temperatures increase a heat coil's rated current and transition currents. In addition, the resistance of the heater wire changes slightly with temperature, usually having a positive temperature coefficient (i.e., the resistance increases as temperature increases). The three key heat-coil parameters should be evaluated at the temperature extremes appropriate for the application.

In some applications, particularly telecommunications line protection, the rated current of multiple heat coil protectors is verified while all heat coils are conducting the specified current. It is done because the telecommunications service is provided by a current loop, with heat coils connected serially in both conductors (source and return, or tip and ring) of the loop. The heat coils each conduct the same level of current at the same time. Simultaneously energized heat coils in close proximity to one other, or to other nearby heat-generating components, raise the temperature near the heat coils faster and higher than if only one device is energized. The resultant higher ambient temperature should be taken into account so that the heat coils do not interfere with normal service by tripping.

The transition current is measured while only one heat coil in the protector is energized. It is done to ensure that a single heat coil will trip without benefit of heat from neighboring heat coils. Those applications requiring heat coils in both lines of a paired-conductor circuit sometimes also require a certain similarity in heat coil resistance (i.e., balance) to reduce the amount of noise generated in the equipment during the presence of common-mode noise, such as those induced by ac power lines. A large heat coil resistance imbalance may result in a significant and undesirable potential difference across the equipment, which can interfere with the equipment's normal operation.

Because heat coils are usually placed in series with the load, they introduce signal loss into the circuit. If the resistance of the heat coils is too high compared with the load resistance, this loss may become unacceptable. In addition, the tightly packed windings of the heat coil's heater wire give the heat coil some self-inductance. Therefore, the signal loss introduced by a heat coil will be larger at higher frequencies.

Copyright © 2005 IEEE. All rights reserved.


Copyright The Institute of Electrical and Electronics Engineers, Inc.
Provided by IHS under license with IEEE
No reproduction or networking permitted without license from IHS Not for Resale

## A.4 Fuses

A fuse functions as an intentional weak link in a circuit, which is intended to safely open the circuit in response to a sustained overload current or short-circuit current condition.

In a common configuration, the fuse is connected in series with the line that is protected by a voltage limiter. When the voltage-limiting device operates to limit an overvoltage, it causes the current to be conducted by the fuse.

For overvoltages caused by lightning, the fuse is designed to withstand the predetermined impulse current waveform, without opening or permanently changing resistance. However, for sustained overvoltages caused by a power line contact to a communication line, or by induction, the fuse should operate (open) before damage occurs to the voltage limiter, which remains shorted under constant overvoltage conditions, or other circuit components. In this case, the fuse should be capable of operating at voltages and currents up to the maximum values encountered in the application.

The fuse element melts and breaks because of the sustained overcurrent. The fuse should be designed to extinguish the arc and permanently clear (or open) the circuit, while containing the energy of the discharge.


Copyright © 2005 IEEE. All rights reserved.
Copyright The Institute of Electrical and Electronics Engineers, Inc.
Provided by IHS under license with IEEE
No reproduction or networking permitted without license from IHS
Not for Resale

# Annex B

(informative)

# Examples of applications of surge protectors used in low-voltage data, communications, and signaling circuits

The following examples are of considerations in the selection and application of surge protectors intended for use in low-voltage data, communications, and signaling circuits. These examples are intended for illustrative purposes only. Because the purpose of each example is limited, each may be incomplete in some respects. Therefore, these examples are not intended to be used as the sole basis of selecting and using protectors in actual applications, nor should they be viewed as the only approach that can be taken for surge protection.

## B.1 Protectors on outdoor lines

This subclause provides an example of a common application of surge protectors on lines that terminate inside a building but are connected to data, communications, or signaling circuits that extend to the outdoors. This example is not intended to apply to protection of all video equipment connected to outdoor lines. Higher surge currents, or different types of equipment or lines, with different withstand capabilities, may require other considerations.

### B.1.1 Example of protection of video camera on coaxial line

Video cameras are frequently mounted on the outside of a building to provide security against intruders. Their elevated location and long connecting cable make them susceptible to lightning-related disturbances and possible damage. Protection is applied on the signal line at the camera and building interfaces.

#### B.1.1.1 Circuit configuration

In this example, a four-terminal surge protective device (SPD) is selected for protection because of the high level of lightning impulse current and the requirement for low-voltage clamping at the camera and video monitor locations. SPDs are placed on a single coaxial cable line in which the cable shielding is also the return path and ground connection. The protector is placed directly at the connection to the outdoor equipment. A two-stage SPD is required that employs, as a minimum, a primary protection element ($V_x$) for diverting the lightning impulse current and a secondary protection element ($V_y$) to provide the low clamping voltage (Figure B.1).

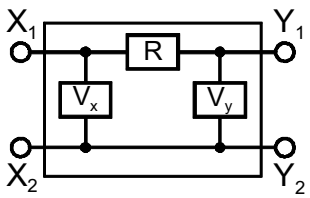


**Figure B.1—Example of protector used on outside coaxial line**

Copyright © 2005 IEEE. All rights reserved.


Copyright The Institute of Electrical and Electronics Engineers, Inc.
Provided by IHS under license with IEEE
No reproduction or networking permitted without license from IHS Not for Resale

### B.1.1.2 Discussion

The primary protection element of the SPD should have sufficient impulse life to divert up to 2000 A of transient current of an 8/20 µs waveform. The secondary protection element should provide an impulse-limiting voltage below the failure threshold voltage of the sensitive component, in this example, 40 V. Between the protection elements is an in-line series resistor (R). This resistor provides the necessary impedance between the two protection elements to ensure activation of the primary element during a transient event. The voltage across the second protection element ($V_y$) plus the voltage drop across the resistor (R) causes a voltage difference across the primary protection element ($V_x$), which enables it to conduct some transient current. For this example, the SPD uses a sealed metallic package with an appropriate coaxial connector at each end so that the SPD can be easily inserted in the line at either end of the data transmission line. The insertion loss and return loss of the protector should be acceptable for the application.

## B.1.2 Secondary protectors

This subclause provides examples of a common application of surge protectors in communication circuits (Figure 2) that extend an outdoor line to circuits within a building.

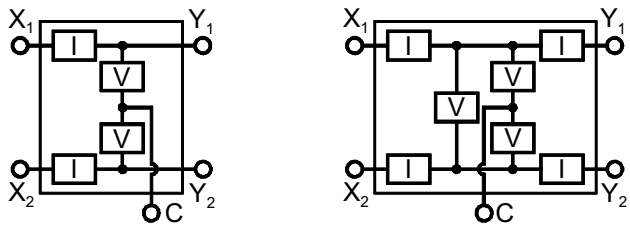


NOTE—I and V current and limiting voltage components, respectively.

**Figure B.2—Examples of secondary protectors used on communication circuits**

### B.1.2.1 Description

Secondary protectors are intended for use on internal building communication circuits that enter from an exposed outside plant. The secondary protector is typically listed or classified for indoor use. In many cases, the protection device is sealed to prevent moisture from entering the device. In cases in which a secondary protector is used outdoors, the circuitry and related hardware are housed within an environmentally suitable enclosure.

The secondary protector is typically located within, or just before, the protected equipment on the communications circuit that connects the equipment to the outside plant. The secondary protector is required to be located on the equipment side of a primary communication protector. In those applications that do not require a primary protector (e.g., intrabuilding cabling), a secondary protector, or data line protector, may be used by itself.

The user is typically an equipment manufacturer, installer, or equipment-owner concerned with fast-rising transients that are not limited by the primary protector. The secondary protector is designed to suppress these types of transients, which are caused by coupling from lightning or other electrical disturbances. The secondary protector also helps protect against above-normal currents that are conducted to ground within the protected equipment. In such cases, a low-impedance path to ground may result in the bypassing of the primary communications protector, so the secondary protector should limit currents to values that are below the current-carrying capability of the on-premises wire and equipment to be protected.


Copyright © 2005 IEEE. All rights reserved.
Copyright The Institute of Electrical and Electronics Engineers, Inc.
Provided by IHS under license with IEEE
No reproduction or networking permitted without license from IHS
Not for Resale

### B.1.3 Five-terminal protector on outside lines

This subclause describes applications for five terminal protectors on lines that run from one building to another within a particular factory, campus, or job site for the purpose of telephone, data, or signaling applications.

#### B.1.3.1 Example of PBX protection using PTC current-limiting devices

Many companies require more telephone sets than outside plant telephone lines. This situation necessitates an interface between many telephone sets and few telephone lines. This interface, called a private branch exchange (PBX), may be located in one building on a large site and connected to many telephone sets located in various buildings around the site. Because the lines connecting these telephone sets may extend up to several miles, they can make the PBX susceptible to damage from power line contacts or lightning. Voltage-limiting devices are placed between each input terminal and the grounded terminal to limit voltage surges. Current-limiting devices in series with each input terminal can be used to help avoid damage and overheating from excess currents.

This example demonstrates the use of PTC devices for current limiting; other devices are available. Because a PBX has two output terminals for each telephone set and a ground terminal, a five-terminal protector can be placed at each output to help protect the PBX from damage.

##### B.1.3.1.1 Circuit configuration

Figure B.3 shows the circuit configuration for the five-terminal protector. It includes $V_x$, which is a primary overvoltage protection device that is normally an open circuit, and becomes a low impedance when a particular voltage level is reached. $V_y$ is a secondary overvoltage protection device that becomes a low impedance at some particular voltage that is lower than the breakdown voltage of the primary device. The PTC devices are normally low impedance. Because of their PTC characteristics, they become a high impedance if a fault current is conducted, and they, therefore, limit the current. The resistors R1 also act as current limiters and may or may not be necessary depending on the characteristics of the other components and the type of surges expected.

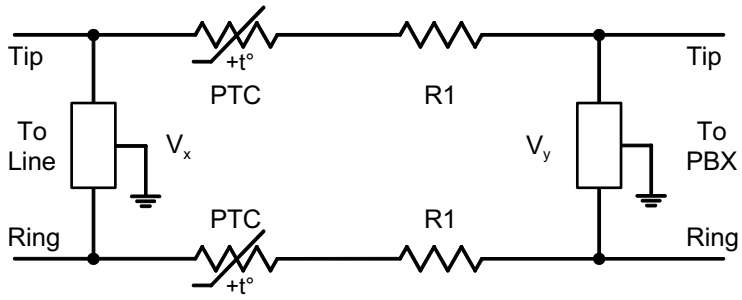


**Figure B.3—Example of a protector used on a PBX**

##### B.1.3.1.2 Discussion

The primary overvoltage protection element $V_x$ should be robust enough to take the current from the worst fault expected. It should have a high enough limiting voltage so that the highest voltage expected under normal conditions (i.e., ringing voltage) will not trigger it. The secondary overvoltage protection element $V_y$ should have a low enough limiting voltage to protect the PBX, and like $V_x$, it should have a high enough limiting voltage so that it does not trigger from routine operating voltages. If these requirements cannot be met, switches can be used to make sure that the PBX and $V_y$ are disconnected whenever ringing voltage is applied. Another consideration is the time $V_x$ takes to trigger relative to the time $V_y$ takes to trigger. Because

Copyright © 2005 IEEE. All rights reserved.


Copyright The Institute of Electrical and Electronics Engineers, Inc.
Provided by IHS under license with IEEE
No reproduction or networking permitted without license from IHS
Not for Resale

$V_y$ is not as robust as $V_x$, a situation in which $V_y$ triggers first and conducts a large amount of current while waiting for $V_x$ to trigger can result in damage to $V_y$.

The purpose of the PTC devices is to interrupt any abnormally high current that may be conducted to ground via the PBX or $V_y$. They also protect against sneak currents, a condition in which the fault voltage is not high enough to trigger $V_x$. The sneak current represents a significant threat, particularly when a power line fault occurs far away from the PBX so that the line resistance to the fault is large. This fault may result in a relatively low voltage at the protector, and a relatively low-fault current, which will not instantly fuse a wire or component, but instead slowly heats a wire or component, creating a fire hazard.

In cases in which the fault voltage is greater than the limiting voltage of $V_y$, the resistor may be needed to ensure that when fault current is conducted, a high enough voltage is sensed by $V_x$ to cause it to operate. In some cases, the increase in PTC resistance caused by the fault current is all that is necessary to ensure that $V_x$ triggers, and the resistors are not needed. In lightning-induced faults, the resistors may be needed to limit current that has too fast a rise time for $V_x$, $V_y$, and the PTCs to limit.

#### B.1.3.2 Example of data line protectors using voltage-limiting devices

Many factories, campuses, and job sites use four-wire shielded twisted pair communications cables that do not run in close proximity to or parallel with power line distributions. These lines may be in close proximity to or parallel with power line distributions. They may run up to 0.5 miles or more and be subjected to nearby lightning strikes causing instantaneous differential and/or common-mode overvoltages. Examples are 20 mA current loop, RS-422, building to building Ethernet links, 24 V fire alarm circuits, and correctional institute fence detection circuits.

##### B.1.3.2.1 Circuit configuration

Configuration 5c of Figure 1 shows the circuit configuration for the five terminal voltage-limiting protector. It includes primary line-to-line and line-to-ground overvoltage protection that is normally open circuit or high impedance and becomes a low impedance when a particular voltage level is reached.

##### B.1.3.2.2 Discussion

The line-to-line and line-to-ground voltage-limiting elements should be robust enough to conduct sufficient current during the low-impedance state to handle the overvoltage without failure during the lightning event. Because a long-distance and associated wire inductance are often involved, protectors at both ends of a data cable are recommended.

*Case history:* A recreational boat sales company suffered frequent damage to computer equipment four-wire, category 5, 5 V Ethernet cable interfaces during lightning strikes to nearby 13,000 Vrms utility distribution lines. The communications server was located in the accounting office of the sales building, and all damaged computers and printers were in the service building approximately 200 ft away. The two buildings were served by separate utility step-down transformers with separate earth grounding systems. The solution was addition of five terminal, voltage-limiting protectors at each end of each Ethernet connection to limit line-to-line and line-to-ground transient overvoltages to 8 V.

### B.1.4 Single-wire protection, RS-423

This subclause describes the application of a three-terminal SPD to be used on an RS-423 unbalanced data line that extends outside a building.


Copyright © 2005 IEEE. All rights reserved.
Copyright The Institute of Electrical and Electronics Engineers, Inc.
Provided by IHS under license with IEEE
No reproduction or networking permitted without license from IHS Not for Resale

### B.1.4.1 Example of data line transmission protection

When data transmission lines are extended outside a building, they may be exposed to lightning-induced transient threats. Because of the high level of voltage and current transients, an external protection network is often required to protect sensitive interface components. Protection is best at the building interface using an SPD that is connected to the ground return path of the circuit. A multistage, three-terminal SPD is useful for this application.

### B.1.4.2 Circuit configuration

A three-terminal SPD can be used for this application because of the single point ground of the multistage unit. The example SPD is composed of a GDT, resistor, and avalanche junction semiconductor surge protective device (Figure B.4). The packaging can be kept small enough to be located on the data input line of the equipment, or it can be inserted in the line at its entrance to the building. If placed at the building entrance, an additional SPD may be required at the equipment interface to suppress transients from sources generated within the building.

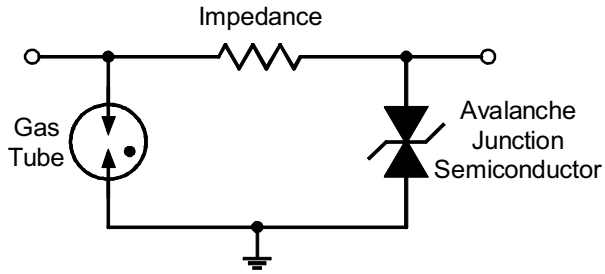


**Figure B.4—Example of protector used on RS-423 unbalanced data line**

### B.1.4.3 Discussion

A two-stage SPD is used because of the high-energy transient environment that can cause large currents to be conducted to the input pins of the serial port. The GDT is used to divert the major portion of the transient current to ground. The avalanche junction semiconductor surge protective device is the secondary protection element that provides the low-voltage clamping for protection of sensitive components. In this application, it is not only important to have a low-resistance ground connection but also to provide the shortest possible connection to a low-impedance earth ground. Installation is best at the building interface where a short wire can be connected to the nearest accessible grounding electrode (e.g., building steel, ground rod, or other good earth ground).

## B.2 Telecommunication-line five-terminal protector module

The five-terminal protector module is intended to protect personnel and telecommunication equipment from electrical surges that can occur on paired-conductor telecommunication circuits. These surges can originate from lightning or from faults on nearby ac power lines. The purpose of the protector is to limit surge voltages and currents or both and return to its quiescent state when the surge has dissipated.

The five-terminal protector modules commonly are used in a telephone company central office to protect and connect the outside cable pair to the telecommunication equipment inside the central office.

Copyright © 2005 IEEE. All rights reserved.


Copyright The Institute of Electrical and Electronics Engineers, Inc.
Provided by IHS under license with IEEE
No reproduction or networking permitted without license from IHS Not for Resale

Some five-terminal modules contain overcurrent protection devices in addition to overvoltage protection devices, where the overvoltage devices are placed in shunt between each cable-side terminal and the common terminal, and the overcurrent devices are placed in series between the outside cable terminals and the equipment terminals. A schematic of one possible configuration is shown in Figure B.5.

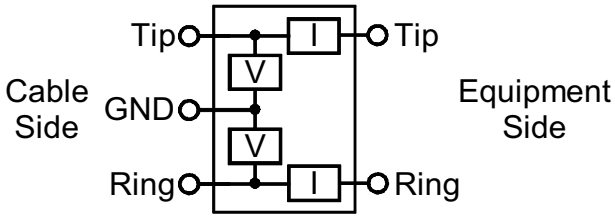


NOTE—I and V current and voltage limiting components, respectively.

**Figure B.5—Telecommunication-line five-terminal protector module**

Five-terminal protector modules are also used in outdoor applications, such as remote terminals and building entrance terminals. These applications may present an uncontrolled environment, exposing the modules to a wide range of temperature and humidity conditions. The five-terminal module selection process should anticipate that.

### B.2.1 Service-affecting considerations

Although five-terminal modules are intended to help protect personnel and equipment during a surge, they should not disturb telephone service under normal conditions. The non-surge performance tests of IEEE Std C62.36-2000 help determine whether a particular five-terminal module interferes with normal telephone service.

The rated voltage and rated current of the five-terminal module should accommodate the maximum continuous voltage and current levels, respectively, which are expected during normal circuit operation. Normal operation should include some unwanted steady-state voltages, such as low-level induction from ac power lines.

The dc-limiting voltage of a five-terminal module should be above the sum of the signaling, steady state induced voltages and the operating voltages of the protected circuit. The transition current of a five-terminal module should be above the operating current of the protected circuit.

Consideration should be given to a module's dc series resistance, inductance, and capacitance, because each contributes to a module's insertion loss and longitudinal balance. The dc series resistance and inductance are most often associated with overcurrent protection devices, and the capacitance is associated with overvoltage protection devices. A module's dc series resistance may change with temperature, and its inductance and capacitance may change with frequency. Requirements for dc series resistance, inductance, and capacitance should be matched to the type of circuits being protected, and it should be specified over appropriate ranges of temperature, frequency, and bias levels, so that the five-terminal module causes the least amount of signal degradation.

A five-terminal module in the circuit introduces a path to ground that is used by the protector to divert surge energy to ground. However, this path may also reduce the signal amplitude reaching the receiver if there is excessive current leakage in the protector. The standby current and insulation resistance of the protector indicate how much of the signal current is inadvertently diverted to ground. Temperature, humidity, signal frequency, signal amplitude, and bias voltage all can affect standby current and insulation resistance of a module.


Copyright © 2005 IEEE. All rights reserved.
Copyright The Institute of Electrical and Electronics Engineers, Inc.
Provided by IHS under license with IEEE
No reproduction or networking permitted without license from IHS
Not for Resale

Digital circuits, in particular, are not only sensitive to signal amplitude change but also to signal shape changes, such as phase shift, or rise time and decay time deterioration. Furthermore, these effects, and excessive insertion loss, can result in an unacceptably high bit error rate. The pulse mask test provides another measure of a protector's impact on digital pulse shape.

### B.2.2 Surge performance considerations

The active performance tests of IEEE Std C62.36-2000 describe those tests that determine a protector's performance during and after a surge, and a protector's ability to withstand repeated surges without affecting service. In addition, and of particular importance for five-terminal protector modules, these tests characterize the failure modes of the protector.

Impulse-limiting voltage measures the peak voltage allowed across the voltage-limiting terminals of the five-terminal module during a simulated surge condition. In general, the impulse-limiting voltage for a particular set of conditions should be lower than the maximum voltage level that the protected equipment can withstand. It is important to be aware that voltage drops in grounding conductors can result in a surge voltage at equipment terminals that is greater than the limiting voltage of the protector.

The impulse-limiting voltage of five-terminal modules can be affected by ambient temperature, voltage rate-of-rise, and current rate-of-rise. For example, the impulse-limiting voltage of GDTs and air gaps increases as the voltage rate-of-rise increases. The impulse-limiting voltage of solid-state devices increases as ambient temperature increases; compared with GDTs and air gaps, the dependence on voltage rate-of-rise is much less.

Once the five-terminal module has diverted the surge to ground, it should return to its quiescent condition in order that normal circuit operation be restored. The purpose of the impulse reset test is to verify that the overvoltage protective devices return to their high-impedance state after a surge is applied.

For gap-type voltage-limiting devices, the ability to reset is influenced by the magnitude of the open-circuit voltage and short-circuit current of the dc source. For thyristor diode devices, the ability to reset is influenced by the short-circuit current of the dc source and by the ambient temperature at the protector.

Some surge conditions do not activate the overvoltage protection devices, but they can still damage equipment. The currents driven by these surges are sometimes referred to as "sneak currents," because they are low-voltage surges that are said to sneak by the overvoltage protection device. Although sneak currents are low voltage and (usually) low current, they can have long duration. Sneak currents can cause electronic components and wiring to overheat, which could interrupt service or start a fire. The current-limiting devices of the module are intended to divert or interrupt these currents.

The performance of a five-terminal module's overcurrent protection devices during and after a surge is evaluated using the transition current and current response time tests. Modules containing or requiring self-resetting current-limiting devices are evaluated by the current reset test for ability to restore to quiescent state.

Some types of overcurrent protection devices, such as heat coils, do not reset once activated. Other types, such as PTC thermistors, reset automatically. A heat coil diverts the sneak current to ground by releasing a mechanism that permanently short-circuits the protected conductor to ground. (High currents may cause the series element of a heat coil to fuse, interrupting the current.) On the other hand, a PTC thermistor reduces current (i.e., limits) by accumulating heat, which increases its resistance. When the voltage across the activated thermistor is substantially reduced, the thermistor cools and returns to a low-resistance condition, allowing normal circuit operation to resume.

Copyright © 2005 IEEE. All rights reserved.


Copyright The Institute of Electrical and Electronics Engineers, Inc.
Provided by IHS under license with IEEE
No reproduction or networking permitted without license from IHS Not for Resale

AC life and impulse life tests are accelerated life tests that are meant to simulate the surge conditions five-terminal modules might experience once installed. Note that some device degradation can be expected to occur during surge life testing. However, specifications for the five-terminal module should properly anticipate this degradation. For instance, the dc-limiting voltage of GDTs and air gaps has a tendency to decrease as the number of applied surges increases. Therefore, these devices typically have an initial dc-limiting voltage that is higher than the rated voltage of the protected circuit.

Because of this change in operating parameters of gap-type devices with surge life discharges, the user sometimes makes compromises in performance of these protector types to achieve a desired "lifespan." For instance, the dc-limiting voltage situation described here results in higher impulse-limiting voltages. In this case, a compromise is made to allow higher peak voltages to reach equipment for the modules to last longer. Note that such a compromise does not cause damage if protected equipment can withstand the higher peak voltages.

The thyristor diode protective device, when used within ratings, typically does not exhibit a degradation in dc- or impulse-limiting voltage with applied life surges. Therefore, its specified limiting voltage can be closer to the rated voltage of the protected circuit, which significantly reduces its surge vulnerability without interfering with normal circuit operation.

The surge current amplitude that a thyristor diode can survive decreases when applied at low-temperature extremes. The minimum operating temperature for a particular application should be determined when thyristor diode surge protector devices are being specified. In this case, the user may have to compromise on the five-terminal module's "lifespan" according to the probability of surges occurring at low temperatures.

Life testing has two purposes. The first is to determine whether the modules survive a sufficient number and variety of surges, thereby suggesting they will not affect service for an adequate period of time. The second is to cause device failure to determine that the modules reach their end-of-life in an acceptable manner.

A five-terminal module is considered to have met the intended failure mode requirement if it has either high standby current (low insulation resistance), low dc-limiting voltage, or has shorted one or both conductors to ground. The module's inability to return to its quiescent condition during the impulse reset test may also be an appropriate failure mode. Unacceptable failure modes include module ejects molten material, catches fire, overheats, or if the overvoltage protection device(s) has open-circuited.

The maximum single-impulse discharge test can be considered as a special case of the impulse life tests. A five-terminal module subjected to this test would be expected to recover from such a test, but at the very least, it would have to fail in an acceptable mode if it did not recover.


Copyright © 2005 IEEE. All rights reserved.
Copyright The Institute of Electrical and Electronics Engineers, Inc.
Provided by IHS under license with IEEE
No reproduction or networking permitted without license from IHS
Not for Resale

# Annex C

(informative)

# Surge protection for paired-conductor telecom cables serving antenna towers

This annex is informative and provides general guidance on avoiding damage in cables serving an antenna tower that is struck by lightning. The guidance also applies to protection of cables that serve any facility that is similarly exposed.

Antenna towers for cellular telecom services often are located beyond urban locales and in remote rural areas. These sites may connect to the local telecom network via small paired-conductor distribution cables. When lightning strikes the tower, electrical surges couple to these cables. This informative annex presents surge protection techniques that help avoid damage to the cables.

## C.1 Magnitude of surge voltages in cable

Using numerical techniques developed by Sunde [B24] and Trueblood and Sunde [B27], the magnitude of surge voltage for various incident lightning current waveforms and earth resistivities at the tower may be estimated. If paired-conductor distribution cable and drop wire serving electronic equipment adjacent to the tower have metallic shields that are continuous, surge levels usually are within the insulation capability of well-maintained cable. All but a few surges should be less than 6.4 kV. If the cable is buried in rocky ground, if the stroke is of long duration, or if the cable is aerial with high-resistance connections to earth, then voltages occasionally approach 20 kV. If the drop to the tower lacks a shield, voltages are even higher.

In most instances, the cable can withstand a 20 kV impulse, but connectors at splices and terminals may not. Faulty installation techniques, damages resulting from frequent activity of service personnel, and aging can cause dielectric capability to drop. Where such activity, insects, or chemical deterioration have lowered the immunity to surges, damage may occur. In these cases, damage occurs not only at the location of the tower, but as much as a mile away.

At antenna locations where damage is experienced, or where conditions are projected to foster large surges, surge protection can help reduce cable troubles. In C.2, the distribution of surge voltages inside the cable without, and with, surge protection along the distribution cable is examined.

## C.2 Location of surge protectors

Paired-conductor cable extends from the tower in the drop and distribution cables to a telecom central office or remote site. In all cases, surge protectors should be placed at the interface of the electronics at the base of the tower between the paired conductors and the grounding system. Likewise, at the central office or remote site, there are protectors between the paired conductors and the grounding system. The metallic shield of the cable is connected to the grounding system at these locations. To avoid arcing damage to the cable, additional protectors sometimes are placed between the conductors and the metallic shield along the cable, usually in distribution terminals or junction cabinets. Their intent is to limit surge voltages to levels that can be tolerated without damage. These additional protectors are commonly known as cable protectors (not to be confused with similarly named protectors on coaxial-cable systems).

Copyright © 2005 IEEE. All rights reserved.


Copyright The Institute of Electrical and Electronics Engineers, Inc.
Provided by IHS under license with IEEE
No reproduction or networking permitted without license from IHS
Not for Resale

## C.3 Voltages along cable without cable protectors

A computer model of the cable derived the results of this annex. To illustrate principles, two pairs in the cable are examined: Pair A connects electronics at the tower to the central office; Pair B extends from the central office to a termination beyond the tower. The cable has a length of 10 km and is 22 gauge. Assume sufficient lightning current from the tower enters the shield of the distribution cable to couple 10 kV (a convenient, round number within the range of possibilities) into the core of the cable. The longitudinal surge voltage between Pair A and the shield (A – S), between Pair B and the shield (B – S), and between Pair A and Pair B (A – B) is plotted in Figure C.1 as a function of distance from the tower. Surge voltages scale linearly with the coupled 10 kV voltage.

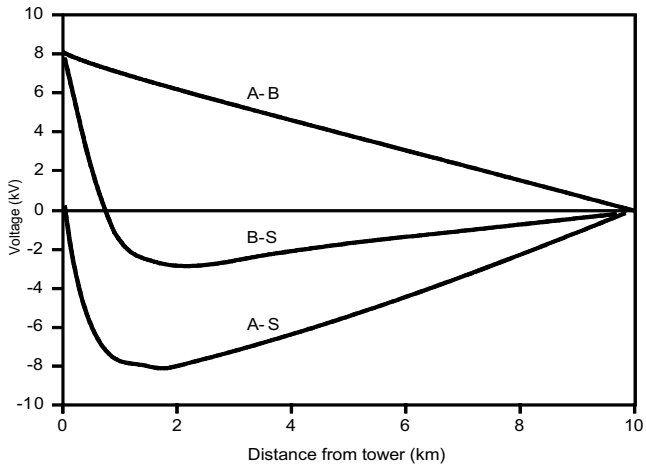


**Figure C.1—Voltage without cable protectors**

At the tower (0 km) and at the central office (10 km), operated protectors hold the voltage between Pair A and shield to 0 V. The greatest voltage (8 kV) between the shield and Pair A occurs about 1.5 km from the tower.

The maximum voltage between Pair B and shield is about 8 kV at the tower, and it crests again about 2 km from the tower. The maximum pair–pair voltage (A – B) is about 8 kV at the tower and tapers to 0 at the central office end.

The simulation shows that the effects of a large surge voltage can be felt far from the tower. If arcing damage is to be avoided, dielectric strength of the cable plant must be maintained at high levels within several kilometers of the tower, or surge protection may be applied.

## C.4 Voltage along cable with cable protectors

Cable protectors are placed between Pair A and shield, and between Pair B and shield, in the distribution terminal of the drop serving the tower. These cause voltages on both pairs relative to the shield to be the same throughout the 10 km cable to the central office. The voltage between either pair and shield that results from protectors at the distribution terminal is labeled “Tower” in Figure C.2. Peak voltage remains over 8 kV, and it occurs about 2 km from the tower. Elimination of pair to pair surge voltage is a significant advance, but large pair-shield voltages remain.


Copyright © 2005 IEEE. All rights reserved.
Copyright The Institute of Electrical and Electronics Engineers, Inc.
Provided by IHS under license with IEEE
No reproduction or networking permitted without license from IHS
Not for Resale

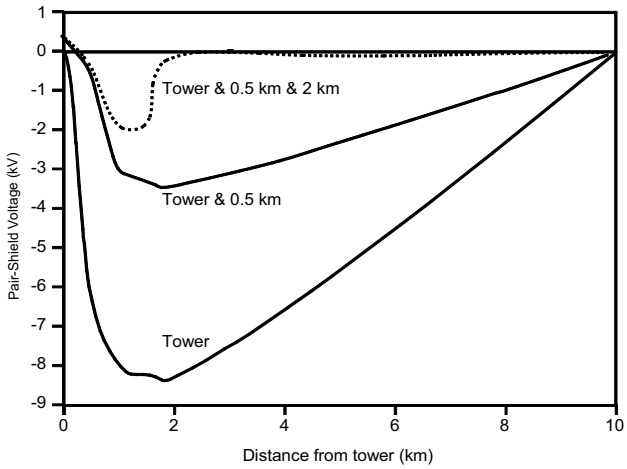


**Figure C.2—Voltages using cable protectors**

The curve labeled “Tower & 0.5 km” in Figure C.2 results from adding a second cable protector between both pairs and the shield at 0.5 km from the tower. Voltages throughout the route are about halved, but they remain significant. The impact of a third cable protector, at 2 km, is shown by the curve labeled “Tower & 0.5 & 2 km”. Voltages are low throughout the route.

## C.5 Summary

Lightning striking an antenna tower injects a voltage surge into paired-conductor distribution cable serving the site. The size of the surge is greatly variable, depending on the lightning stroke current, earthing of the tower, and configuration of the distribution cable. Occasional large stroke currents or poor grounds near the tower can result in voltage surges that damage the cable.

The voltage surges persist far from the tower and may damage the plant at a weak point 1 or 2 km away. This dispersion causes damage patterns that are hard to associate with the tower.

If plant conditions foretell excess surge voltages, surge protectors along the cable greatly reduce the threat. Protectors should be placed on all pairs in the distribution terminal serving the tower as well as at several sites within 2 km of the tower.

For additional information on this topic, see Chrysanthou et al. [B11], Chrysanthou and Parente [B9], Carroll and Miller [B6], Carroll [B5], and Pomponi et al. [B22].

Copyright © 2005 IEEE. All rights reserved.


Copyright The Institute of Electrical and Electronics Engineers, Inc.
Provided by IHS under license with IEEE
No reproduction or networking permitted without license from IHS
Not for Resale

# Annex D

(informative)

# Surge protection for DSL systems

## D.1 Overview

DSL systems are capable of transmitting high-speed data services over twisted-pair cables of the public telecommunications network. DSL does not imply the subscriber line that is used for providing the service, but the technology (e.g., transceivers) that is connected at both ends of line for providing the high-speed transmission rate. Such systems are ISDN, HDSL, SDSL, ADSL, and VDSL (see Table D.1 for full name of each acronym).

**Table D.1—DSL systems**

| Technology | Data rate | Mode | Some applications |
|---|---|---|---|
| DSL | 160 kbps | Duplex | ISDN Service, Voice and Data Communication |
| HDSL | 1.544 Mbps | Duplex | T1/E1 Service, Feeder Plant, WAN and LAN access, Internet server access |
| | 2.048 Mbps | Duplex | |
| SDSL | 1.544 Mbps | Duplex | Same as HDSL plus premises access for symmetric services |
| | 2.048 Mbps | Duplex | |
| ADSL | 1.5–9 Mbps | Downstream | Internet access, video on demand, remote LAN access, interactive media |
| | 16–640 kbps | Upstream | |
| VDSL | 13–52 Mbps | Downstream | Same as ADSL plus High-Definition TV |
| | 1.5–2.3 Mbps | Upstream | |

ISDN Basic Rate is the technology for providing duplex data at 160 kbps over twisted-pairs up to 5.5 km (18 kft) length. The data are provided over two B channels (64 kbps each), one D channel (16 kbps), and some overhead supervisory signaling. However, customer demand for faster network access is continuously increasing for use in different applications, such as Internet access, video on demand, and interactive multimedia. Thus, DSL technology has evolved over the years to provide higher speed data to the customer over the existing twisted-pairs. Table D.1 shows the existing transmission fundamentals and the possible applications of the DSL systems.

HDSL is another way of transmitting T1 (1.544 Mbps) or E1 (2.048 Mbps) service, but it uses less bandwidth (from 80 kHz to 240 kHz) and requires no repeaters. HDSL provides its services over lines up to 3.7 km (12 kft) length, but it requires two twisted-pairs for the T1 service and three twisted-pairs for the E1 service. HDSL mostly will be used in internetworking applications, such as Digital Loop Carriers (DLC) systems, Internet servers, and private data networks. HDSL may be used for Internet and remote LAN access, but it probably will be superseded by ADSL and SDSL.


Copyright © 2005 IEEE. All rights reserved.
Copyright The Institute of Electrical and Electronics Engineers, Inc.
Provided by IHS under license with IEEE
No reproduction or networking permitted without license from IHS
Not for Resale

SDSL also transmits at T1 and E1 rates but over a single twisted-pair up to 3.0 km (10 kft) length. In most cases, SDSL provides the T1 or E1 service over POTS. Thus, SDSL is suitable for providing high-speed data services to customer premises over a single line. SDSL can be used by all applications that require symmetric access in contrast to ADSL.

ADSL can transmit a high-speed downstream channel ranging from 1.5 Mbps to 9 Mbps to subscriber, a medium-speed duplex channel ranging from 16 kbps to 640 kbps, and a POTS or an ISDN channel. The downstream channel can transport up to four independent downstream bearer subchannels. The duplex channel can transport up to three duplex bearer subchannels. The ADSL signal and POTS coexist on the same wire. A splitter/filter is used at the ends of the wire line, CO, and residential premises to separate the voice and data signals. The industry has developed a new generation of ADSL called G.lite that does not require the use of a splitter/filter. The ADSL technology is intended for applications such as Internet access, multimedia access, and video on demand that can be provided on asymmetric access. The standard for ADSL is ANSI T1-413 [B1]. The international standards for ADSL are the ITU-T recommendations G.992.2 (or G.lite) [B16] and G992.1 (or G.dmt) [B15].

VDSL is similar to ADSL, providing asymmetric access but at higher data speed than ADSL over much shorter lines. Although the VDSL technology is in the process of being standardized, the downstream data speeds are expected to be 12.96 Mbps, 25.96 Mbps, and 51.84 Mbps. The suggested upstream data speed is ranging from 1.6 Mbps to 2.3 Mbps. The VDSL data channel will operate over POTS and ISDN services.

The transport capacity of the DSL systems depends on the physical characteristics of the subscriber line such as length, wire gauge, and the presence of bridge taps and load coils. The transmission rate is constrained with the line attenuation that increases as the line length, wire gauge, and frequency increase. In addition, the bandwidth capacity of the line is limited by load coils. Table D.2 shows examples of the transport capacity associated with various lengths of different wire gages of a nonloaded line. The technology is rapidly changing, and Table D.1 and Table D.2 are current as of this publication. For additional information, see the ADSL Forum website (http://www.dslforum.org).

**Table D.2—Data rate vs. wire limitations for DSL systems**

| Data rate | Wire gauge | Line length |
|---|---|---|
| 1.5 Mbps | 24 AWG | 5.5 km (18.0 kft) |
| 1.5 Mbps | 26 AWG | 4.6 km (15.0 kft) |
| 6.1 Mbps | 24 AWG | 3.7 km (12.0 kft) |
| 6.1 Mbps | 26 AWG | 2.7 km (9.0 kft) |
| 8.448 Mbps | 24 AWG | 2.7 km (9.0 kft) |
| 12.96 Mbps | 24 AWG | 1.5 km (4.5 kft) |
| 25.92 Mbps | 24 AWG | 1.0 km (3.0 kft) |
| 51.84 Mbps | 24 AWG | 0.3 km (1.0 kft) |

The 1983 Subscriber Loop Survey [B26] in the United States indicated that 90% of the loops have less than 6.1 km (20 kft) length, 80% of loops have less than 6.1 km (18 kft) length, 90% of the loops have less than 1.0 km (3 kft) bridge taps lengths, and 76% of the loops are nonloaded. However, many telephone companies have reduced the average loop length since then by the systematic deployment of DLC systems and by adopting the Carrier Service Area (CSA) concept. The CSA is a distinct geographical area that is served by one DLC remote terminal. The CSA cable from the remote terminal of the DLC to the customer

Copyright © 2005 IEEE. All rights reserved.


Copyright The Institute of Electrical and Electronics Engineers, Inc.
Provided by IHS under license with IEEE
No reproduction or networking permitted without license from IHS Not for Resale

premises should be nonloaded and should not exceed 3.7 km (12 kft) length including the bridged tap for 19 AWG, 22 AWG, or 24 AWG cable; it also should not exceed 2.7 km (9 kft) including bridged tap for 26 AWG cable. The requirements of the CSA cable are based on the consideration for providing to the customer at least 56 kbps digital service.

## D.2 Surge protection

Surge protectors are used at the metallic interfaces of twisted-pair cable providing DSL services to divert and limit the surges to reduce the risk of fire or electric shock and to prevent damage to equipment. Surge protectors with switching device (crowbar) characteristics are used today at the interfaces of the twisted-copper pairs providing POTS service (up to 4 kHz). However, DSL systems will require much more bandwidth than POTS for transmitting their high data rates. As the data rate increases, the required bandwidth increases too. ADSL will require at least 1.1 MHz bandwidth, whereas VDSL will require much more bandwidth (8 MHz through 50 MHz).

Certain characteristics of surge protectors used in twisted-pairs such as intrinsic capacitance, inductance, and resistance may affect the insertion loss, return loss, bit error rate, and longitudinal balance of the twisted-pair, and they may inadvertently degrade the data transmission of DSL systems at high frequencies.

IEEE Std C62.36-2000 provides the surge protector test procedures, and IEEE Std C62.64-1997 provides the performance requirements that may be necessary to ensure the proper operation of DSL systems in the presence of surge protectors. Such tests are insertion loss, return loss, BER test, pulse mask, phase shift, and longitudinal balance.

Chrysanthou and Parente [B10] provide an analysis of the effects of protector characteristics (capacitance, inductance, and resistance) on category-5 cable systems. Such analysis includes insertion loss, return loss, and phase shift.


Copyright © 2005 IEEE. All rights reserved.
Copyright The Institute of Electrical and Electronics Engineers, Inc.
Provided by IHS under license with IEEE
No reproduction or networking permitted without license from IHS
Not for Resale

# Annex E

(informative)

## Protection coordination between primary and secondary surge protectors

The coordination is to ensure that the primary protector will operate and prevent the overstress of secondary protector and any other element (e.g., current limiter, fuse) between the protectors during surges. Primary protectors are provided on telecommunications circuits at the network interface device in close proximity of the building entrance as required by Article 800 of the NEC. Secondary protectors may also be used to reduce surge voltages to a level lower than the voltage limiting of the primary protector (see 6.5, Figure 4b).

At customer locations, the secondary protectors usually are located within the customer premises equipment and are separated from the primary protectors by the interior wiring. In addition, a secondary protector provides means of limiting current and preventing heating of interior wiring in accordance with Article 800-32 of the NEC (see 6.4). At COs or remote terminals, the secondary protectors are located within the equipment and are separated from the primary protectors by wiring and maybe by current limiters that are part of the primary protectors (equipment side of primary protectors).

The impedance of the wiring or other elements such as current limiters may not be sufficient to assure the operation of the primary protector. In this scenario, the secondary protector and the equipment may be stressed with energies exceeding their capabilities. To evaluate properly the protection coordination, the wave shape of current surge (peak, rate of rise, and duration), the gauge and length of the wiring between the protectors, any other element (e.g., fuse, current limiters), as well as the energy capability of the secondary protectors should be considered.

A coordination analysis between the primary and secondary protectors under the influence of lightning or power fault disturbances is necessary to determine

- If there is coordination between the primary and secondary protectors
- If an impedance between primary and secondary is required to achieve coordination
- The voltages and currents associated with the protectors and other components (e.g., interior wiring, fuses)
- If the energy imposed on the secondary protectors, wiring, elements, and equipment is exceeding their capabilities

The analysis of coordination of cascaded protectors has been addressed in literature in different ways, as follows:

- ITU-T K.20 [B17], ITU-T K.21 [B18], ITU-T K.44 [B19], and ITU-T K.45 [B20] provide a test and criteria for determining coordination at COs and customer locations.
- Chrysanthou and Boksiner [B8] analyze the coordination on telecommunications circuits by decoupling the three-conductor transmission line into common and differential modes. The transmission line is reduced further to Thevenin equivalent circuits as it is observed at customer premises. For analyzing the interaction of cascaded protectors, equivalent circuits that represent operated surge protectors are developed for determining the impact of protectors' operation on the decoupled modes. Furthermore, the analysis is simplified to two circuit models valid for the rising and decaying of voltage surges from lighting.
- Martzloff [B21] and Standler [B23] analyze the coordination of cascaded protectors in power circuits by simulating the surge propagation on long cables with surge generators.

Copyright © 2005 IEEE. All rights reserved.


Copyright The Institute of Electrical and Electronics Engineers, Inc.
Provided by IHS under license with IEEE
No reproduction or networking permitted without license from IHS Not for Resale

# Annex F

(informative)

# Antenna feeds protection and RF surge suppression technology overview for communication sites

## F.1 Lightning exposure of communication towers

Communication towers, especially in rural areas, are struck by lightning more often than any other structures. Towers are predominately higher structures than their surroundings, and they are highly conductive. Towers, supporting RF feeder cables to the communication shelters, have a certain amount of resistance and inductance per foot. The tower joint resistance value, considering its weight, is typically less than 0.001 Ω. The E = IR voltage drops across the structure are considerable; however, it is the inductive voltage drop that is responsible for extremely high voltage drops across the structure. The value of tower inductance is dependent on its geometric configuration. The type of tower (monopole, guyed, self-supporting) as well as the width-to-height ratio will determine the total inductance of a tower. A theoretical self-supporting 150 ft tower will have an inductance of approximately 40 µH. The approximate inductive value of such a structure can be derived from quarter-wave antenna theory for towers of width-to-height ratios of less than 1%.

Let us consider an 18 kA, 2 µs rise-time lightning current pulse discharged to a 150 ft, 40 µH tower. The resulting voltage drop across the structure calculated as $v = -Ldi/dt$ will be approximately 360 kV.

## F.2 Lightning voltage and current distribution on coaxial cables

Most of the energy of a lightning pulse is distributed between dc and 1 MHz. When lightning current propagates on a coaxial cable, there is high-frequency rolloff and a slight propagation delay that occurs because of the unbalanced inductances of the shield and the center conductor and the center conductor's capacitive relationship through the dielectric to the shield. The higher frequency shield energy will arrive at the equipment first, followed by the center conductor energy spread out over time. Because the pulse energy arrives at the different times, a differential voltage can occur that must be equalized and prevented from reaching the equipment.

Every wireless communication site employing tower-mounted antennas, with a coaxial cable interface into the radio equipment, will be subject to such a differential current propagation during a lightning event. Wireless radio equipment in the communication shelter or Tower Top Electronics (TTE) located on the communication tower will experience differential voltages at the equipment input causing its damage or degradation.

To understand the lightning current propagation difference on the shield and center conductor of a coaxial cable, and associated with it current signatures, a test was performed that is illustrated in F.3. This test is for illustration purposes only and describes fixed values of all parameters, i.e., coaxial cable type and length, surge current value, wave shape, and generator source impedance. Results will vary as these parameters change.


Copyright © 2005 IEEE. All rights reserved.
Copyright The Institute of Electrical and Electronics Engineers, Inc.
Provided by IHS under license with IEEE
No reproduction or networking permitted without license from IHS
Not for Resale

## F.3 Lightning surge currents coupled to the coax cable from antenna

A test was performed (Figure F.1) on a 50 ft, 7/8" coaxial cable typically used as a feeder. The center conductor and shield on one side were shorted to simulate a shunt-fed antenna, as shown in Figure F.1. The current from the resulting voltage drop across two 0.001 Ω current viewing resistors at the far end (equipment location) was viewed with a 500 MHz, 2 Gigasamples/second oscilloscope. The source impedance of the generator used in the test was 2 Ω with an open-circuit voltage of 6 kV (1.2 × 50 μs) and a short-circuit current of 3 kA (8 × 20 μs). The injected current into the shorted end (to simulate a shunt-fed antenna) had a peak value of 1750 A. The resulting measurements of current distribution on coaxial shields and center conductors are represented in Figure F.2.

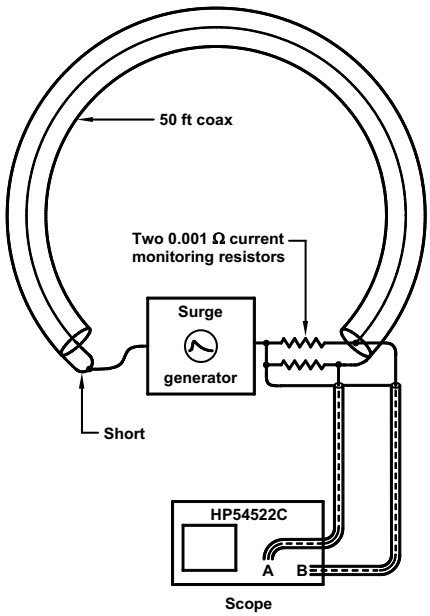


**Figure F.1—Test setup for surging a 50 ft, 7/8" coaxial cable typically used as a feeder**

Figure F.2 illustrates the difference in peak values of currents recorded at the end of the 50 ft coaxial cable. This difference in current peak amplitudes and their rise times is caused by the imbalance impedance of a coaxial cable. This scenario may cause damage to the communications equipment and explains the need for coaxial surge suppression.

Copyright © 2005 IEEE. All rights reserved.


Copyright The Institute of Electrical and Electronics Engineers, Inc.
Provided by IHS under license with IEEE
No reproduction or networking permitted without license from IHS
Not for Resale

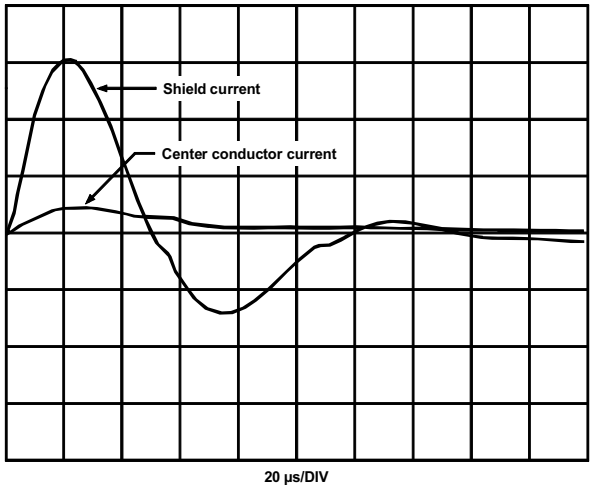


NOTE—Shield current: +1531 A/–688 A. Center conductor current: 234 A/–63 A.

**Figure F.2—The response measured in the test setup shown in Figure F.1, when a surge is applied from a generator with an internal impedence of 2 Ω, an open-circuit voltage of 6 kV (1.2 × 50 µs), and a short-circuit current of 3 kA (8 × 20 µs)**

## F.4 RF surge suppression technology overview

Three basic technologies are used in the design of RF surge protection devices.

### F.4.1 Protector containing only a GDT

A coaxial protector containing only a GDT without dc blocking has dc continuity from surge side connector center pin to the equipment side connector center pin. The fast rise-time lightning pulse can achieve high magnitude voltage across the GDT before the gas can ionize and become conductive. Because there is no dc blocking mechanism, this high voltage pulse is applied directly to the equipment input before the GDT "turns on." If the protected equipment input is through a ferrite circulator/isolator, the incoming pulse is converted to current in the ferrite's resistive load, creating a magnetic field that can realign the critically adjusted field in the circulator, change the magnet's flux density, and damage or destroy the resistive load. If the incoming voltage pulse appears across a coupling loop (as in most filters and combiners), it sees low-resistance/short and is almost entirely converted to current. A dc shorted equipment input loop directly shorts the GDT. The GDT might never see enough voltage to "turn-on" because current flow must go through the coaxial cable jumper and equipment input before an inductive voltage drop across the GDT could reach a potential high enough to ionize the gas.

Coaxial protectors containing only GDTs will allow dc current and voltage to be supplied to tower top electronics, e.g., tower top amplifiers.

### F.4.2 "Quarter-wave stub"

The "quarter-wave stub" coaxial protector is based on the well-known principle of band pass/band rejection. Using a coaxial "T" fitting and calculating the length of a quarter-wave coaxial section from the horizontal center conductor to the grounded base of the "T" can form a band-pass filter at a given frequency. Because most energy in a lightning strike is from dc to 1 MHz, it would fall on the lower frequency reject side of the band-pass filter and be conducted to ground. However, if the equipment input is also dc shorted, the quarter-wave stub will allow divided dc and low-frequency energy to flow toward the


Copyright © 2005 IEEE. All rights reserved.
Copyright The Institute of Electrical and Electronics Engineers, Inc.
Provided by IHS under license with IEEE
No reproduction or networking permitted without license from IHS
Not for Resale

equipment input. The quarter-wave-based device cannot be applied where dc currents and voltages are required to power RF electronics. They are also tuned, through their design, to relatively narrow operating bands (approximately ±10% of operating frequency).

### F.4.3 Filter-based coaxial protectors

Filter-based lightning protection devices are characterized by their broadband performance characteristics. They could cover multiple transmit/receive frequencies. These cavity-based designs could be characterized as band-pass filters. They consist of tuned LC networks and operate on the band-pass/reject principle. The operating band for these type devices could be as high as 1500 MHz. Using the dc blocking capacitive component on their center pin and inductive current discharge circuit to shield/ground ensures their broadband RF performance characteristics. Designs based on this principal allow a close match to 50 Ω over a broader range. These devices cannot be used in applications calling for dc currents and voltages to pass to RF electronics.

## F.5 Installation location of RF surge protectors

In most communications applications, the RF feeder cables will enter an equipment shelter via a grounded bulkhead. Coaxial cable shields are generally grounded at their point of entry to the communication shelter. RF surge protective devices are usually installed on the bulkhead or in the vicinity of the bulkhead and grounded to the local shelter ground. It is extremely important to ground every surge protective device to the local site ground.

Figure F.3 shows one method of installing and grounding for RF surge suppression devices. This particular bulkhead provides a single-point ground for coaxial shields and RF surge suppressors, as well as for communications equipment.

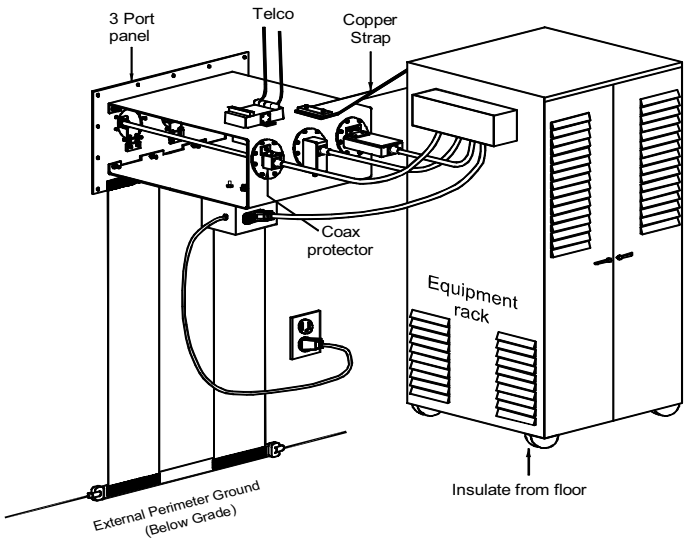


**Figure F.3—Example of a method of installing and grounding for RF surge suppression devices**

Copyright © 2005 IEEE. All rights reserved.


Copyright The Institute of Electrical and Electronics Engineers, Inc.
Provided by IHS under license with IEEE
No reproduction or networking permitted without license from IHS Not for Resale

# Annex G

(informative)

# Bibliography

[B1] ANSI T1-413, Network and Customer Installation Interfaces Asymmetric Digital Subscriber Line (ADSL) Metallic Interface.[7]

[B2] ANSI T1.601, Integrated Services Digital Network (ISDN)—Basic Access Interface for Use on Metallic Loops for Application on the Network Side of the NT (Layer 1 Specification).

[B3] ANSI/EIA/TIA 571A-1999, Environmental Considerations for Telephone Terminals.[8]

[B4] ASC C2-1997, *National Electrical Safety Code® Interpretations 1997-1999*, Institute of Electrical and Electronic Engineers.

[B5] Carroll, R. L., "Loop transient measurements in Cleveland, South Carolina," *Bell System Technical Journal*, vol. 59, no. 9, pp. 1630–1645, Nov. 1980.

[B6] Carroll, R. L. and Miller, P. S., "Loop transients at the customer station," *Bell System Technical Journal*, vol. 59, no. 9, pp. 1609–1629, Nov. 1980.

[B7] Chrysanthou, C., "Statistical models for differential-mode conversion of common-mode impulse voltages measured on telecommunications pairs," *IEEE Transactions on Electromagnetic Compatibility*, vol. 38, no. 3, p. 489, Aug. 1996.

[B8] Chrysanthou, C. and Boksiner, J., "Analysis of coordination between primary and secondary protectors," *1997 Winter Meeting of Power Engineering Society*, New York, pp. 1501–1507, Feb. 1997.

[B9] Chrysanthou, C. and Parente, M., "Data errors caused by surge voltages on paired-conductor lines," *IEEE Transactions on Power Delivery*, vol. 16, no. 1, p. 131, Jan. 2001.

[B10] Chrysanthou, C. and Parente, M., "Transmission effects of surge protectors on category-5 cable systems," *IEEE Transactions on Power Delivery*, vol. 18, no. 4, pp. 1209–1213, Oct. 2003.

[B11] Chrysanthou, C., Melton, R. B., Jr., and Parente, M., "Surge protection for an optical-fiber telecommunication system," *IEEE Transactions on Power Delivery*, vol. 9, no. 3, pp. 1421–1427, July 1994.

[B12] IEEE 100, *The Authoritative Dictionary of IEEE Standards Terms*, Seventh Edition.[9, 10]

[B13] IEEE Std 802.3-2005, IEEE Standard for Carrier Sense Multiple Access with Collision Detection (CSMA/CD).

[B14] ITU-T G.703, Physical/Electrical Characteristics of Hierarchical Digital Interfaces.[11]

[7]ANSI publications are available from the Sales Department, American National Standards Institute, 25 West 43rd Street, 4th Floor, New York, NY 10036, USA (http://www.ansi.org/).

[8]EIA publications are available from Global Engineering Documents, 15 Inverness Way East, Englewood, CO 80112, USA (http://global.ihs.com/).

[9]IEEE publications are available from the Institute of Electrical and Electronics Engineers, Inc., 445 Hoes Lane, Piscataway, NJ 08854, USA (http://standards.ieee.org/).

[10]The IEEE standards or products referred to in this clause are trademarks of the Institute of Electrical and Electronics Engineers, Inc.


Copyright © 2005 IEEE. All rights reserved.
Copyright The Institute of Electrical and Electronics Engineers, Inc.
Provided by IHS under license with IEEE
No reproduction or networking permitted without license from IHS
Not for Resale

[B15] ITU-T G.992.1 (called also G.dmt), Asymmetric Digital Subscriber Line (ADSL) Transceivers.

[B16] ITU-T G.992.2 (called also G.lite), Splitterless Asymmetric Digital Subscriber Line (ADSL) Transceivers.

[B17] ITU-T K.20, Resistibility of Telecommunication Switching Equipment to Overvoltages and Overcurrents.

[B18] ITU-T K.21, Resistibility of Telecommunication Equipment Installed in Customer Premises to Overvoltages and Overcurrents.

[B19] ITU-T K.44, Resistibility Tests for Telecommunication Equipment Exposed to Overvoltages and Overcurrents—Basic Recommendation.

[B20] ITU-T K.45, Resistibility of Access Network Equipment to Overvoltages and Overcurrents.

[B21] Martzloff, F. D., "Coordination of surge protectors in low-voltage AC power circuits," *IEEE Transactions Power Apparatus and Systems*, vol. 99, no. 1, pp. 129–133, Jan./Feb. 1980.

[B22] Pomponi, R., Kajima, H., Parente, M., Popp, E., Scott, W., and Zeddam, A., *Surge Voltages and Currents Measured on Telecommunications Lines*, Zurich, Switzerland: EMC, 1993.

[B23] Standler, R. B., "Coordination of surge arresters and suppressors for use on low-voltage mains," *Proceedings, 1991 Zurich EMC Symposium*, Zurich, Switzerland, pp. 517–524, Mar. 1991.

[B24] Sunde, E., *Earth Conduction Effects in Transmission Systems*. New York: Dover, 1968.

[B25] Telcordia GR-1089-CORE, Issue 3, Electromagnetic Compatibility and Electrical Safety—Generic Criteria for Network Telecommunications Equipment, Oct. 2002.

[B26] Telcordia ST-TSY-000041, Characterization of Subscriber Loops for Voice and ISDN Services, June 1987.

[B27] Trueblood, H. and Sunde, E., "Lightning current observations in buried cable," *Bell Systems Technical Journal*, vol. 28, p. 278, Apr. 1949.

[B28] UL497, Standard for safety, protectors for paired conductor communication circuits.[12]

[B29] UL497A, Standard for safety, secondary protectors for communications circuits.

[B30] UL497B, Standard for safety, protectors for data communications and fire alarm circuits.

[B31] UL497C, Standard for safety, protectors for coaxial communications circuits.

[11]ITU-T publications are available from the International Telecommunications Union, Place des Nations, CH-1211, Geneva 20, Switzerland/Suisse (http://www.itu.int/).

[12]UL standards are available from Global Engineering Documents, 15 Inverness Way East, Englewood, CO 80112, USA (http://global.ihs.com/).

Copyright © 2005 IEEE. All rights reserved.


Copyright The Institute of Electrical and Electronics Engineers, Inc.
Provided by IHS under license with IEEE
No reproduction or networking permitted without license from IHS Not for Resale