Recognized as an American National Standard (ANSI)

IEEE Std C57.16-1996
(Revision of ANSI C57.16-1958)

IEEE Standard Requirements, Terminology, and Test Code for Dry-Type Air-Core Series-Connected Reactors

Sponsor
Transformers Committee
of the
IEEE Power Engineering Society

Approved 10 December 1996
IEEE Standards Board

Approved 7 May 1997
American National Standards Institute

Abstract: Series-Connected dry-type air-core single-phase and three-phase outdoor or indoor reactors of distribution and transmission voltage class that are connected in the power system to control power flow under steady-state conditions and/or limit fault current under short-circuit conditions are covered. Dry-Type air-core reactors covered by this standard are self-cooled by natural air convection. With some restrictions, other reactors, including filter reactors, shunt capacitor reactors (used with shunt capacitor banks), and discharge current limiting reactors (used with series capacitor banks), are also covered.
Keywords: air-core reactors, discharge current-limiting reactors, dry-type air-core reactors, dry-type reactors, filter reactors, harmonic filters, reactors, series capacitor bank applications, series-connected reactors, series reactor applications, shunt capacitor bank applications, shunt capacitor reactors

---

The Institute of Electrical and Electronics Engineers, Inc.

345 East 47th Street, New York, NY 10017-2394, USA

Copyright © 1997 by the Institute of Electrical and Electronics Engineers, Inc.

All rights reserved. Published 1997. Printed in the United States of America

ISBN 1-55937-881-6

No part of this publication may be reproduced in any form, in an electronic retrieval system or otherwise, without the prior written permission of the publisher.

--`,,`,,`-`-`,,`,,`,`,,`---

Copyright The Institute of Electrical and Electronics Engineers, Inc.
Provided by IHS under license with IEEE
No reproduction or networking permitted without license from IHS

Not for Resale

IEEE Standards documents are developed within the IEEE Societies and the Standards Coordinating Committees of the IEEE Standards Board. Members of the committees serve voluntarily and without compensation. They are not necessarily members of the Institute. The standards developed within IEEE represent a consensus of the broad expertise on the subject within the Institute as well as those activities outside of IEEE that have expressed an interest in participating in the development of the standard.

Use of an IEEE Standard is wholly voluntary. The existence of an IEEE Standard does not imply that there are no other ways to produce, test, measure, purchase, market, or provide other goods and services related to the scope of the IEEE Standard. Furthermore, the viewpoint expressed at the time a standard is approved and issued is subject to change brought about through developments in the state of the art and comments received from users of the standard. Every IEEE Standard is subjected to review at least every five years for revision or reaffirmation. When a document is more than five years old and has not been reaffirmed, it is reasonable to conclude that its contents, although still of some value, do not wholly reflect the present state of the art. Users are cautioned to check to determine that they have the latest edition of any IEEE Standard.

Comments for revision of IEEE Standards are welcome from any interested party, regardless of membership affiliation with IEEE. Suggestions for changes in documents should be in the form of a proposed change of text, together with appropriate supporting comments.

Interpretations: Occasionally questions may arise regarding the meaning of portions of standards as they relate to specific applications. When the need for interpretations is brought to the attention of IEEE, the Institute will initiate action to prepare appropriate responses. Since IEEE Standards represent a consensus of all concerned interests, it is important to ensure that any interpretation has also received the concurrence of a balance of interests. For this reason, IEEE and the members of its societies and Standards Coordinating Committees are not able to provide an instant response to interpretation requests except in those cases where the matter has previously received formal consideration.

Comments on standards and requests for interpretations should be addressed to:

Secretary, IEEE Standards Board
445 Hoes Lane
P.O. Box 1331
Piscataway, NJ 08855-1331
USA

Note: Attention is called to the possibility that implementation of this standard may require use of subject matter covered by patent rights. By publication of this standard, no position is taken with respect to the existence or validity of any patent rights in connection therewith. The IEEE shall not be responsible for identifying patents for which a license may be required by an IEEE standard or for conducting inquiries into the legal validity or scope of those patents that are brought to its attention.

Authorization to photocopy portions of any individual standard for internal or personal use is granted by the Institute of Electrical and Electronics Engineers, Inc., provided that the appropriate fee is paid to Copyright Clearance Center. To arrange for payment of licensing fee, please contact Copyright Clearance Center, Customer Service, 222 Rosewood Drive, Danvers, MA 01923 USA; (508) 750-8400. Permission to photocopy portions of any individual standard for educational class-room use can also be obtained through the Copyright Clearance Center.

Copyright The Institute of Electrical and Electronics Engineers, Inc.
Provided by IHS under license with IEEE
No reproduction or networking permitted without license from IHS
Not for Resale

Introduction

(This introduction is not part of IEEE Std C57.16-1996, IEEE Standard Requirements, Terminology, and Test Code for Dry-Type Air-Core Series-Connected Reactors.)

The work to revise ANSI C57.16-1958, Standard Requirements, Terminology and Test Code for Current Limiting Reactors, was carried out by the Dry-Type Reactor Working Group, reporting to the Dry-Type Transformers Subcommittee of the IEEE Transformers Committee. There were several important objectives for the revision, which led to the current document.

a) The scope was broadened to reflect the current usage of ANSI C57.16-1958. Thus the title was changed to incorporate the words “series-connected reactors” instead of “current-limiting reactors.”
b) It has been common practice in the industry to use ANSI C57.16-1958 in the specification and testing of filter reactors, shunt capacitor reactors, and discharge current-limiting reactors for series capacitor banks. Thus several new normative annexes were added to more appropriately and accurately accommodate this need.
c) ANSI C57.16-1958 covered both oil-immersed and dry-type reactors. Based on a formal vote in the Performance Characteristics Subcommittee and a voice vote of the Transformers Committee, no interest was raised in continuing the inclusion of oil-immersed reactors in the standard. Therefore, this revision of ANSI C57.16-1958 is a dry-type standard only in order to reflect the present and future needs of purchasers (“end users”) and manufacturers.

At the time this standard was completed, the Dry-Type Reactor Working Group had the following membership:

Richard F. Dudley, *Chair*

Raymond Allustiarti
Michael S. Altman
Gregory W. Anderson
Peter Bettencourt
Gene Blackburn
Thomas F. Clark
Dan De La Cruz
J. Alan C. Forrest
Peter Iijima
Anthony J. Jonnatti
Lars-Erik Juhlin
Sheldon P. Kennedy
Frank A. Lewis
Gerald K. Marowski
Nigel P. McQuin
Klaus Papp
Paulette A. Payne
G. S. Polovick
Pierre Riffon
M. R. Sharp
Sheldon Silberman
Joe Thompson
Gene Wolf

The following persons were on the balloting committee:

Edward J. Adolphson
D. J. Allan
Raymond Allustiarti
Michael S. Altman
Glenn Andersen
Jim C. Arnold
J. Arteaga
Jacques Aubin
Donald E. Ayers
Roy A. Bancroft
Ron L. Barker
David A. Barnard
Edward A. Bertolini
Wallace B. Binder
J. H. Bishop
William E. Boettger
Joe V. Bonucchi
John D. Borst
C. V. Brown
M. Cambre
D. J. Cash
Don Chu
Thomas F. Clark
Jerry L. Corkran
Dan W. Crofts
John C. Crouse
V. Dahinden
John N. Davis
Robert C. Degeneff
Tom Diamantis
Larry E. Dix
Richard F. Dudley
John A. Ebert
K. Edwards
Fred E. Elliott
D. J. Fallon
P. T. Feghali
Jeffrey A. Fleeman
Michael A. Franchek
Jerry M. Frank
Dudley L. Galloway
Ali A. Ghafourian
Donald A. Gillies
Ramsis S. Girgis
Richard D. Graham
Robert L. Grubb
Robert L. Grunert
F. J. Gryszkiewicz
Michael E. Haas
Geoff H. Hall
Ernst Hanique
N. Wayne Hansen
Kenneth S. Hanus
James H. Harlow

--`,,`,,-`-`,,`,,`,`,,`---

Copyright The Institute of Electrical and Electronics Engineers, Inc.
Provided by IHS under license with IEEE
No reproduction or networking permitted without license from IHS
Not for Resale

Frank W. Heinrichs
William R. Henning
K. R. Highton
Peter J. Hoefler
Philip J. Hopkinson
J. W. Howard
Edgar Howells
John Hunt
Y. Peter Iijimma
C. W. Johnson
Anthony J. Jonnatti
R. D. Jordan
Gene Kallaur
Joe J. Kelly
Sheldon P. Kennedy
William N. Kennedy
James P. Kinney
Alexander D. Kline
John G. Lackey
Michael Y. Lau
J. P. Lazar
Frank A. Lewis
Harold F. Light
S. R. Lindgren
Larry A. Lowdermilk
Donald L. Lowe
Richard I. Lowe
David S. Lyon
Joseph Ma
William A. Maguire
K. T. Massouda
John W. Matthews
Angie McCain
Jack W. McGill
Charles J. McMillen
W. J. McNutt
Charles P. McShane
Ross McTaggart
Sam P. Mehta
C. Kent Miller
Matthew C. Mingoia
Russell E. Minkwitz
Michael I. Mitelman
Harold R. Moore
W. E. Morehart
Daniel H. Mulkey
Chuck R. Murray
R. J. Musil
William H. Mutschler, Jr.
Carl G. Niemann
E. T. Norton
Paul E. Orehek
Gerald A. Paiva
Klaus Papp
Bipin K. Patel
Wesley F. Patterson, Jr.
Jesse M. Patton
Paulette A. Payne
Larry C. Pearson
Thomas J. Pekarek
Dan D. Perco
Mark D. Perkins
V. Q. Pham
Linden W. Pierce
R. Leon Plaster
Donald W. Platts
Bertrand Poulin
Jeewan L. Puri
Vadim Raff
J. D. Ramboz
Charles T. Raymond
Pierre Riffon
Peter G. Risse
S. M. A. Rizvi
Chris A. Robbins
R. B. Robertson
Arlise L. Robinson, Jr.
John R. Rossetti
G. W. Rowe
Mahesh P. Sampat
Leo J. Savio
William E. Saxon
Robert W. Scheu
Devki N. Sharma
Vic Shenoy
Hyeong Jin Sim
James E. Smith
J. Ed Smith
Jerry W. Smith
Stephen D. Smith
Ronald J. Stahara
W. W. Stein
Ron W. Stoner
John C. Sullivan
David Sundin
Louis A. Tauber
James B. Templeton
V. Thenappan
James A. Thompson
Robert W. Thompson
Thomas P. Traub
Edger R. Trummer
Georges H. Vaillancourt
Robert A. Veitch
Loren B. Wagenaar
Barry H. Ward
Robert Whearty
D. W. Whitley
A. L. Wilks
Charles W. Williams

The Accredited Standards Committee on Transformers, Regulators, and Reactors, C57, that reviewed and approved this document, had the following membership at the time of approval:

P. E. Orehek, *Chair*
J. D. Borst, *Vice Chair*
John A. Gauthier, *Secretary*

Organization Represented	*Name of Representative*
Electric Light and Power Group	P. Orehek *(Delegation Chair)*
	Gary N. Miller *(Alt.)*
	T. Diamantis
	K. S. Hanus
	Carl G. Niemann
	S. Paiva
	J. Sullivan
Institute of Electrical and Electronics Engineers	B. Patel *(Delegation Chair)*

Copyright The Institute of Electrical and Electronics Engineers, Inc.
Provided by IHS under license with IEEE
No reproduction or networking permitted without license from IHS
Not for Resale

W. B. Binder
J. D. Borst
J. H. Harlow
J. W. Matthews
National Electrical Manufacturers Association ..... P. Hopkinson *(Delegation Chair)*
R. L. Plaster *(Alt.)*
H. Robin *(Alt.)*
H. J. Sim *(Alt.)*
M. Austin
G. D. Coulter
S. Endersbe
A. Ghafourian
K. R. Linsley
Tennessee Valley Authority ..... F. Lewis
Underwriters Laboratories, Inc. ..... Michael Schacker
U.S. Department of Agriculture, Rural Electrification Administration (REA) ..... J. Bohlk
U.S. Department of Energy Western Area Power Administration ..... Kenneth C. Wolohan
U.S. Department of the Navy, Civil Engineering Corps ..... C. M. Mandeville

When the IEEE Standards Board approved this standard on 10 December 1996, it had the following membership:

Donald C. Loughry, *Chair*
Richard J. Holleman, *Vice Chair*
Andrew G. Salem, *Secretary*

Gilles A. Baril	E. G. "Al" Kiener	Arthur K. Reilly
Clyde R. Camp	Joseph L. Koepfinger*	Ronald H. Reimer
Joseph A. Cannatelli	Stephen R. Lambert	Gary S. Robinson
Stephen L. Diamond	Lawrence V. McCall	Ingo Rüsch
Harold E. Epstein	L. Bruce McClung	John S. Ryan
Donald C. Fleckenstein	Marco W. Migliaro	Chee Kiow Tan
Jay Forster*	Mary Lou Padgett	Leonard L. Tripp
Donald N. Heirman	John W. Pope	Howard L. Wolfman
Ben C. Johnson	Jose R. Ramos	

*Member Emeritus

Also included are the following nonvoting IEEE Standards Board liaisons:

Satish K. Aggarwal	Alan H. Cookson	Chester C. Taylor

Kristin M. Dittmann
IEEE Standards Project Editor

Copyright The Institute of Electrical and Electronics Engineers, Inc.
Provided by IHS under license with IEEE
No reproduction or networking permitted without license from IHS
Not for Resale

CLAUSE PAGE

1. Overview 1

1.1 Scope 1
1.2 Purpose 1

2. References 2

3. Definitions 3

3.1 Types of dry-type air-core series reactors 3
3.2 Series reactor applications 4
3.3 Rating 4
3.4 Current 4
3.5 Duty 5
3.6 Voltage 5
3.7 Losses, impedance, and system frequency 5

4. General requirements 6

4.1 Service conditions 6
4.2 Insulation 7
4.3 Operation at altitudes in excess of 1000 m (3300 ft) 7

5. Rating 9

5.1 Basis of rating 9
5.2 System frequency 9
5.3 Reactance rating 9
5.4 Voltage rating 10
5.5 Continuous current rating 10
5.6 Short-Circuit current rating 10

6. Tests 12

6.1 Routine, design, and other tests for series reactors 12
6.2 Where tests are to be made 14
6.3 Test sequence 14
6.4 Test procedures 14

7. Losses and impedance 14

7.1 Losses 14
7.2 Impedance 15
7.3 Impedance and losses test 15

8. Temperature rise 16

8.1 Considerations in establishing limits of temperature rise 16
8.2 Limits of temperature rise 17
8.3 Temperature rise tests 19

Copyright The Institute of Electrical and Electronics Engineers, Inc.
Provided by IHS under license with IEEE
No reproduction or networking permitted without license from IHS
Not for Resale

CLAUSE PAGE

9. Insulation levels and dielectric tests....20

9.1 Impulse insulation levels.... 20
9.2 Dielectric test levels.... 21
9.3 Dielectric tests.... 22

10. Short-Circuit capability....23

10.1 Short-Circuit description.... 23
10.2 Maximum mechanical stress of series reactors for short-circuit conditions.... 23
10.3 Thermal limit of series reactors for short-circuit conditions.... 25
10.4 Mechanical short-circuit test.... 25

11. Test code....25

11.1 General.... 25
11.2 Resistance measurements.... 26
11.3 Dielectric tests.... 29
11.4 Losses and impedance.... 35
11.5 Temperature rise tests.... 38
11.6 Short-Circuit test.... 43
11.7 Short-Time current.... 46
11.8 Audible sound-level test.... 47
11.9 Seismic verification test.... 51

12. Construction....51

12.1 Nameplates.... 51
12.2 Insulator units.... 52
12.3 Tap (in a reactor).... 52

Annex A (Normative) Specific requirements for dry-type air-core filter reactors....53

Annex B (Normative) Specific requirements for dry-type air-core shunt capacitor reactors....65

Annex C (Normative) Specific requirements for dry-type air-core discharge current-limiting reactors for series capacitor bank applications....73

Annex D (Informative) Construction and installation of dry-type air-core series reactors....81

Annex E (Informative) Bibliography....87

Copyright The Institute of Electrical and Electronics Engineers, Inc.
Provided by IHS under license with IEEE
No reproduction or networking permitted without license from IHS
Not for Resale

Copyright The Institute of Electrical and Electronics Engineers, Inc.
Provided by IHS under license with IEEE
No reproduction or networking permitted without license from IHS

Not for Resale

IEEE Standard Requirements, Terminology, and Test Code for Dry-Type Air-Core Series-Connected Reactors

1. Overview

1.1 Scope

This standard applies to *series-connected* dry-type air-core single-phase and three-phase outdoor or indoor reactors of distribution and transmission voltage class that are connected in the power system to control power flow under steady-state conditions and/or limit fault current under short-circuit conditions. Dry-type air-core reactors covered by this standard are self-cooled by natural air convection.

With some restrictions, this standard is applicable to filter reactors, shunt capacitor reactors (used with shunt capacitor banks), and discharge current-limiting reactors (used with series capacitor banks). Annexes A, B, and C are included to provide guidance.

This standard does not apply to devices such as

a) Shunt reactors (see IEEE Std C57.21-1990, IEEE Standard Requirements, Terminology, and Test Code for Shunt Reactors Rated Over 500 kVA),
b) Arc suppression coils,
c) Neutral grounding devices [see IEEE Std 32-1972 (Reaff 1990), IEEE Standard Requirements, Terminology, and Test Procedures for Neutral Grounding Devices],
d) Line resonant reactors,
e) High-Voltage direct current (HVDC) smoothing reactors,
f) Forced cooled reactors, and
g) Line traps and radio interference (RI) filter reactors (ANSI C93.3-1995).

1.2 Purpose

The existing ANSI C57.16-1958, which is still in use by the industry, is out of date and has been withdrawn as an IEEE standard. It has now been revised to reflect modern product technology, to describe up-to-date test methods, and to present application requirements for series reactors.

Copyright © 1997 IEEE All Rights Reserved

--`,,`-`-`,,`,,`,`,,`---

Copyright The Institute of Electrical and Electronics Engineers, Inc.
Provided by IHS under license with IEEE
No reproduction or networking permitted without license from IHS
Not for Resale

2. References

This standard shall be used in conjunction with the following publications:

ANSI C29.9-1983 (Reaff 1996), American National Standard—Wet-Process Porcelain Insulators (Apparatus, Post Type).[1]

ANSI C37.06-1987 (Reaff 1994), American National Standard—Preferred Rating and Related Required Capabilities for AC High Voltage Circuit Breakers Rated on a Symmetrical Current Basis.

ANSI C37.12-1991, American National Standard—Specification Guide for AC High-Voltage Circuit Breakers Based on a Symmetrical Current Basis.[2]

ANSI C84.1-1989, American National Standard—Voltage Ratings for Electric Power Systems and Equipment (60 Hz).

ANSI C93.3-1995, American National Standard—Requirements for Power-line Carrier Line Traps.[3]

ANSI S1.4-1983, American National Standard—Specification for Sound Level M (includes supplement ANSI S1.4a-1985).

ANSI S1.11-1986 (Reaff 1993), American National Standard—Specifications for Octave-Band and Fractional Octave-Band Analog and Digital Filters.

IEC 143-1-1992, Series capacitors for power systems—Part 1: General—Performance, testing and rating—Safety requirements—Guide for installation.[4]

IEC 143-2-1994, Series capacitors for power systems—Part 2: Protective equipment for series capacitor banks.

IEC 722-1982, Guide to the lightning impulse and switching impulse testing of power transformers and reactors. Appendix A, Principles for wave shape control.

IEC 943-1989, Guide for the specification of permissible temperature and temperature rise for parts of electrical equipment, in particular for terminals.

IEEE Std 1-1986 (Reaff 1992), IEEE Standard General Principles for Temperature Limits in the Rating of Electric Equipment and for the Evaluation of Electrical Insulation (ANSI).

IEEE Std 4-1995, IEEE Standard Techniques for High-Voltage Testing (ANSI).

IEEE Std 18-1992, IEEE Standard for Shunt Power Capacitors (ANSI).

IEEE Std 100-1996, IEEE Standard Dictionary of Electrical and Electronics Terms.

IEEE Std 315-1975 (Reaff 1993), Graphic Symbols for Electrical and Electronics Diagrams (Including Reference Designation Letters) (ANSI).

---

[1]IEEE publications are available from the Institute of Electrical and Electronics Engineers, 445 Hoes Lane, P.O. Box 1331, Piscataway, NJ 08855-1331, USA.

[2]ANSI publications are available from the Sales Department, American National Standards Institute, 11 West 42nd Street, 13th Floor, New York, NY 10036, USA.

[3]As this standard goes to press, ANSI C93.3-1995 is approved but not yet published. Contact the American National Standards Institute, 11 West 42nd Street, 13th floor, New York, NY 10036, USA, for more information.

[4]IEC publications are available from IEC Sales Department, Case Postale 131, 3 rue de Varembé, CH-1211, Genève 20, Switzerland/ Suisse. IEC publications are also available in the United States from the Sales Department, American National Standards Institute.

--`,,`-`-`,,`,,`,`,,`---
Copyright © 1997 IEEE All Rights Reserved

Copyright The Institute of Electrical and Electronics Engineers, Inc.
Provided by IHS under license with IEEE
No reproduction or networking permitted without license from IHS
Not for Resale

IEEE Std 693-1984 (Reaff 1991), IEEE Recommended Practices for Seismic Design of Substations (ANSI).

IEEE Std 824-1994, IEEE Standard for Series Capacitors in Power Systems (ANSI).

IEEE Std C57.12.80-1978 (Reaff 1992), IEEE Standard Terminology for Power and Distribution Transformers (ANSI).

IEEE Std C57.12.90-1993, IEEE Test Code for Liquid-Immersed Distribution, Power and Regulating Transformers and IEEE Guide for Short-Circuit Testing of Distribution and Power Transformers (ANSI).

IEEE Std C57.21-1990 (Reaff 1995), IEEE Standard Requirements, Terminology and Test Code For Shunt Reactors Rated Over 500 kVA (ANSI).

IEEE Std C57.98-1994, IEEE Guide for Transformer Impulse Tests (ANSI).

IEEE Std C62.1-1989 (Reaff 1994), IEEE Standard for Gapped Silicon-Carbide Surge Arresters for AC Power Circuits (ANSI).

IEEE Std C62.2-1989 (Reaff 1994), IEEE Guide for the Application of Gapped Silicon-Carbide Surge Arresters for Alternating-Current Systems (ANSI).

IEEE Std C62.11-1993, IEEE Standard for Metal-Oxide Surge Arresters for Alternating Current Power Circuits (ANSI).

IEEE Std C62.22-1991, IEEE Guide for the Application of Metal Oxide Surge Arresters for Alternating Current Systems (ANSI).

NEMA 107-1988 (Reaff 1993), Methods of Measurement of Radio Influence Voltage (RIV) of High-Voltage Apparatus. [5]

3. Definitions

All definitions, except as specifically covered in this standard, shall be in accordance with IEEE Std 100-1996 . For the convenience of the user, definitions are organized by category.

3.1 Types of dry-type air-core series reactors

3.1.1 air-core reactor: A reactor that does not include a magnetic core or magnetic shield.

3.1.2 indoor reactor: A reactor that, because of its construction, must be protected from the weather.

3.1.3 outdoor reactor: A reactor of weatherproof construction.

3.1.4 three-phase dry-type air-core reactor: A reactor made up of single-phase devices that are stacked and magnetically coupled. Depending on the application, the self-inductance may be modified to compensate for mutual coupling effects.

[5]NEMA publications are available from the National Electrical Manufacturers Association, 1300 N. 17th St., Ste. 1847, Rosslyn, VA 22209, USA.

Copyright © 1997 IEEE All Rights Reserved

--`,,`-`-`,,`,,`,`,,`---

Copyright The Institute of Electrical and Electronics Engineers, Inc.
Provided by IHS under license with IEEE
No reproduction or networking permitted without license from IHS Not for Resale

3.2 Series reactor applications

3.2.1 bus tie reactor: A current-limiting reactor for connection between two different buses or two sections of the same bus for the purpose of limiting and localizing the disturbance due to a fault in either bus.

3.2.2 current-limiting reactor: A reactor connected in series with the phase conductors for limiting the current that can flow in a circuit under short-circuit conditions, or under other operating conditions, such as capacitor switching, motor starting, synchronizing, arc stabilization, etc.

3.2.3 duplex current-limiting reactor: A center-tapped reactor used in two circuit branches fed by a common circuit and wound in such a way as to employ negative coupling under normal operating conditions to reduce circuit impedance and positive coupling under fault conditions to increase circuit impedance.

3.2.4 feeder reactor: A current-limiting reactor connected in series with a feeder circuit, for the purpose of limiting and localizing the disturbance due to faults on the feeder.

3.2.5 high-voltage power flow control reactor: A transmission class reactor connected in series with the transmission system in order to optimize power flow by altering the line reactance.

3.2.6 insertion reactor: A reactor that is connected momentarily across the open contacts of a circuit-interrupting device for synchronizing and/or switching transient suppression purposes.

3.2.7 load balancing reactor: A series-connected reactor used to correct the division of current between parallel-connected transformers or circuits that have unequal impedance voltages under steady-state and short-circuit conditions.

3.2.8 motor starting reactor: A current-limiting reactor used to limit the starting current of a machine.

3.3 Rating

3.3.1 rating of a series reactor: The current that a series reactor can carry at its specified reactance together with any other defining characteristics, such as system voltage, basic impulse level (BIL), short-circuit current (thermal and mechanical) duty, and frequency.

3.4 Current

3.4.1 continuous current: The maximum constant root-mean-square (rms) power-frequency current that can be carried continuously without causing further measurable increase in temperature rise under prescribed conditions of test, and within the limitations of established standards.

3.4.2 mechanical short-circuit rating: The maximum asymmetrical (peak) fault current that the reactor is capable of withstanding with no loss of electrical or mechanical integrity.

3.4.3 rated current: The root-mean-square (rms) power-frequency current in amperes that can be carried for the duty specified, at rated frequency without exceeding the specified temperature limits, and within the limitations of established standards.

3.4.4 rated short-time overcurrent: The root-mean-square (rms) power-frequency current, of magnitude greater than the continuous current rating, that can be carried for a specified period of time and, depending on the ambient temperature, that may result in defined loss of the reactor's service life.

3.4.5 thermal short-circuit rating: The maximum steady-state short-circuit root-mean-square (rms) current that can be carried for a specified time, the reactor being approximately at rated temperature rise and maximum ambient at the time the load is applied, without exceeding the specified temperature limits, and within the limitations of established standards.

Copyright © 1997 IEEE All Rights Reserved

Copyright The Institute of Electrical and Electronics Engineers, Inc.
Provided by IHS under license with IEEE
No reproduction or networking permitted without license from IHS Not for Resale

3.5 Duty

3.5.1 continuous duty: A requirement of service that demands operation at a substantially constant current for an extended period of time.

3.5.2 duty: A requirement of service that defines the degree of regularity of the current through the reactor.

3.5.3 intermittent duty: A requirement of service that demands operation for alternate periods of current loading and rest, such alternate intervals being definitely specified.

3.5.4 periodic duty: A type of intermittent duty in which the current loading conditions are regularly recurrent.

3.5.5 short-time duty: A requirement of service that demands operation at a substantially constant current for a short and definitely specified time.

3.5.6 varying duty: A requirement of service that demands operation at intermittent current loading, and for periods of time, both of which may be subject to wide variation.

3.6 Voltage

3.6.1 nominal voltage (of a system): A nominal value assigned to a system or circuit of a given voltage class for the purpose of convenient designation.

NOTE — The term *nominal voltage* designates the line-to-line voltage, as distinguished from the *line-to-neutral* voltage. It applies to all parts of the system or circuit.

3.6.2 rated system voltage: The voltage of a series reactor to which operational and performance characteristics are referred. It corresponds to the nominal line-to-line or phase-to-phase system voltage of the circuit on which the reactor is intended to be used.

3.6.3 voltage to ground: The voltage between any live conductor of a circuit and the earth.

NOTE — Where safety considerations are involved, the voltage to ground that may occur in an ungrounded circuit is usually the highest voltage normally existing between the conductors of the circuit, but in special circumstances higher voltages may occur.

3.7 Losses, impedance, and system frequency

3.7.1 Losses

3.7.1.1 “effective” resistance: The value of resistance of a series reactor obtained by dividing the total losses, as defined in 3.7.1.2 losses, items a), b), and c), by the current squared at power frequency. *Synonym:* ac resistance.

3.7.1.2 losses: Those losses that are incident to the carrying of current. They include

a) The resistance and eddy-current loss in the winding due to load current.
b) Losses caused by circulating current in parallel windings.
c) Stray losses caused by magnetic flux in other metallic parts of the reactor, in the reactor support structure, and in the reactor enclosure when the support structure and the enclosure are supplied as an integral part of the reactor installation.

NOTE — The losses produced by magnetic flux in adjacent apparatus or material not an integral part of the reactor or its enclosure (if supplied) are not included.

3.7.2 Impedance

3.7.2.1 impedance: The phasor sum of the reactance and effective resistance, expressed in ohms.

3.7.2.2 impedance voltage drop: The product of the rated ohms’ impedance and the rated current of a series reactor.

Copyright © 1997 IEEE All Rights Reserved

Copyright The Institute of Electrical and Electronics Engineers, Inc.
Provided by IHS under license with IEEE
No reproduction or networking permitted without license from IHS Not for Resale

3.7.2.3 per-unit reactance: On a rated current base, a dimensionless quantity obtained by referencing the magnitude of the reactance to the rated system line-to-neutral voltage divided by the rated current of the reactor.

NOTE — Per-Unit reactance can also be defined on an arbitrary megavoltampere (MVA) base.

3.7.2.4 rated inductance: The total installed inductance at a specified frequency. It may consist of mutual as well as self-inductance components.

3.7.2.5 rated reactance: The product of rated inductance and rated angular frequency that provides the required reduction in fault current or other desired modification to power circuit characteristics.

3.7.2.6 reactance: The product of the inductance in henries and the angular frequency of the system.

3.7.2.7 reactance voltage drop: The component of voltage drop in quadrature with the current.

3.7.2.8 resistance voltage drop: The component of voltage drop in phase with the current.

4. General requirements

4.1 Service conditions

4.1.1 Usual service conditions

Series reactors conforming to this standard shall be suitable for operation at standard rating provided that the site-related conditions in the following subclauses are met.

4.1.1.1 Ambient temperature

Ambient temperature is the temperature of the air surrounding the reactor. For the purposes of this standard, it is assumed that the temperature of the cooling air (ambient temperature) does not exceed 40 °C and the average temperature of the cooling air for any 24 h period does not exceed 30 °C.[6]

4.1.1.2 Environmental and application related service conditions

Reactors for outdoor application must be designed for conditions such as rain, freezing rain (ice), snow, fog and ultraviolet (UV) ray exposure. The purchaser should, in the specification, attempt to quantify or qualify environmental conditions, including type and level of pollution. The reactor should also be designed to withstand, without damage or loss of service life, mechanical loads such as electromagnetic forces during short-circuit, wind loading, and stresses caused by thermal expansion and contraction due to ambient temperature and current loading variations. Wind speed data, including gust factors, should be specified by the purchaser. In the case of indoor application, the purchaser should specify the type and level of pollution from the environment and the indoor ambient temperature range.

4.1.1.3 Altitude

The altitude does not exceed 1000 m (3300 ft).

4.1.2 Unusual service conditions and other conditions that may affect design and application

Unusual service conditions may require that particular consideration be given to the construction or operation of the equipment, and these should be brought to the attention of those responsible for the specification, manufacture, application, and operation of the equipment. Among such unusual conditions are the following:

[6]It is recommended that the average temperature of the cooling air be calculated by averaging 24 consecutive hourly readings. When the outdoor air is the cooling medium, the average of the maximum and minimum daily temperature may be used. The value that is obtained in this manner is usually slightly higher than the true daily average.

Copyright © 1997 IEEE All Rights Reserved

Copyright The Institute of Electrical and Electronics Engineers, Inc.
Provided by IHS under license with IEEE
No reproduction or networking permitted without license from IHS Not for Resale

a) Application at higher ambient temperatures or at higher altitudes than specified in 4.1.1.
   NOTE — Standard equipment may be applied at higher ambient temperatures, or at higher altitudes than specified, but the performance will be affected.
b) Restriction of air flow to the reactor that could affect its self-cooling by natural air convection.
c) Exposure to damaging fumes or vapors; farm fertilizers and weed sprays; excessive dust, abrasive or magnetic dust; explosive mixtures of dust or gases; steam, excessive moisture, or dripping water; salt air or spray, etc.
d) Exposure to abnormal vibration, shock, or tilting.
e) Exposure to temperatures below –40 °C.
f) Exposure to unusual transportation or storage conditions.
g) Unusual space limitations.
h) Operating duty, difficulty of maintenance, abnormal harmonic content, unbalanced voltage, special insulation requirement, etc.
i) Unusual operating requirements, such as might result from the absence of surge-arrester protection, lack of magnetic shielding, etc.
   NOTE — If a series reactor is not fully shielded magnetically, consideration should be given to its location relative to other apparatus and to metallic structures, in order to minimize heating effects of stray fields at normal current and reaction forces under short circuit. The manufacturer can evaluate the suitability of an installation if provided with details of the surrounding structure.
j) Operation of system with one phase conductor grounded.
   NOTE — This should be considered as an emergency operating condition, and the duration should be limited to the time reasonably required to isolate the fault.

4.2 Insulation

4.2.1 Insulation between turns

Dry-type air-core series reactors have no magnetic core, therefore the primary internal insulation is solely the winding turn-to-turn insulation system. In the case of open-style dry-type reactor designs, the insulation between turns is provided by air and the materials utilized to separate the turns. In the case of dry-type reactors with fully encapsulated windings, the insulation between turns is usually a solid dielectric material. The material utilized to encapsulate such a reactor is primarily employed to provide environmental protection and mechanical strength. In selecting appropriate materials to be utilized as turns insulation on the conductors, it is necessary to evaluate dielectric properties, mechanical properties, and multifactor aging characteristics under operating conditions. Encapsulation materials are evaluated in a similar fashion. Amount, type, and method of application of materials employed are a function of manufacturing considerations, specification requirements, service (application) requirements, and site or environmental conditions.

4.2.2 Insulation between terminals

The distance between input and output terminals, the winding length, the electrode configuration of the winding ends, and the dielectric properties of the winding surface must be such that the reactor can withstand the steady-state operating voltages, short-time, and transient overvoltages applied between the terminals.

4.2.3 Insulation to ground and between phases

The support insulators provide the primary insulation to ground and, if applicable, between phases of a dry-type air-core series reactor. These are selected based on system voltage considerations, special transient overvoltage requirements, and site environmental conditions (i.e., pollution, altitude, etc.).

4.3 Operation at altitudes in excess of 1000 m (3300 ft)

Standard equipment may be applied in locations having an altitude in excess of 1000 m (3300 ft), but the dielectric strength of air-insulated parts and the current-carrying capacity will be reduced. For instance, the effect of decreased

Copyright © 1997 IEEE All Rights Reserved

Copyright The Institute of Electrical and Electronics Engineers, Inc.
Provided by IHS under license with IEEE
No reproduction or networking permitted without license from IHS Not for Resale

air density due to high altitude is to decrease the flashover voltage for a given distance. See IEEE Std 4-1995 [7] for use of a correction factor with sphere gaps.

4.3.1 Dielectric strength of air-insulated parts

The dielectric strength at greater than 1000 m (3300 ft) of air-insulated parts of a given insulation class should be multiplied by the proper altitude correction factor, as given in Table 1, to obtain the dielectric strength at the required altitude. For example, the dielectric strength of a series reactor that depends in whole or in part upon air for its insulation decreases as the altitude increases.

4.3.2 Operation at rated current

It is recognized as good practice to use reactors of standard temperature rise at rated current at altitudes greater than 1000 m (3300 ft) provided the average temperature of the cooling air does not exceed the values in Table 2 for the respective altitudes. Standard temperature limits will not be exceeded.

4.3.3 Operation at less than rated current

It is recommended that when reactors of standard temperature rise in standard ambient temperatures are used at altitudes greater than 1000 m (3300 ft), that the current to be carried is reduced below rating by 0.3% for each 100 m (330 ft) that the altitude is above 1000 m. If this is done, the standard temperature rise will not be exceeded.

Table 1—Dielectric strength correction factors for altitudes greater than 1000 m (3300 ft)

Altitude		Altitude correction factor for dielectric strength
m	ft	
1000	3300	1.00
1200	4000	0.98
1500	5000	0.95
1800	6000	0.92
2100	7000	0.89
2400	8000	0.86
2700	9000	0.83
3000	10 000	0.80
3600	12 000	0.75
4200	14 000	0.70
4500	15 000	0.67
NOTE — An altitude of 4500 m (15 000 ft) is considered a maximum for standard reactors.		

[7] Information about references can be found in Clause 2

Copyright © 1997 IEEE All Rights Reserved

Copyright The Institute of Electrical and Electronics Engineers, Inc.
Provided by IHS under license with IEEE
No reproduction or networking permitted without license from IHS Not for Resale

Table 2—Maximum allowable 24 h average temperature of cooling air to permit a dry-type air-core series reactor to carry rated current

Insulation index (°C)	Altitude (°C)			
	1000 m (3300 ft)	2000 m (6600 ft)	3000 m (9900 ft)	4000 m (13 200 ft)
105	30	27	24	21
130	30	26	22	18
155	30	24	18	12
180	30	23	16	9
220	30	22	15	7
NOTE — Recommended calculation of average temperature is described in Footnote 6 (see page 7).				

5. Rating

5.1 Basis of rating

The rating of a series reactor shall include the following:

a) Reactance (in ohms or percent)
b) Voltage drop
c) System voltage
d) Continuous current
e) Mechanical and thermal short-circuit current
f) Number of phases
g) Frequency
h) Basic insulation level (BIL)

5.2 System frequency

The reference system frequency for series reactors used in this standard in North America is 60 Hz.

NOTE — As this standard is used outside North America, 50 Hz may be the operating frequency. In this case, calculations will have to be modified accordingly.

5.3 Reactance rating

Most currently available dry-type air-core series reactors are custom designed; thus the end user should specify the exact reactance required.

5.3.1 Reactance voltage drop

The reactance voltage drop of a series reactor at its rated current is obtained by multiplying the rated reactance by the rated current.

Copyright © 1997 IEEE All Rights Reserved

Copyright The Institute of Electrical and Electronics Engineers, Inc.
Provided by IHS under license with IEEE
No reproduction or networking permitted without license from IHS Not for Resale

5.4 Voltage rating

Custom-designed dry-type air-core series reactors are available for any system voltage rating including the standard ones listed in Table 5 (see also Clause 9).

5.5 Continuous current rating

5.5.1 Specification of current rating

Currently available custom-designed dry-type air-core series reactors allow the end user to specify the exact current rating required, including special duty cycles.

NOTE — If harmonic current content is significant, it should be taken into consideration in arriving at the continuous current rating of the series reactor.

5.6 Short-Circuit current rating

5.6.1 Mechanical and thermal short-circuit current rating

Series (current-limiting) reactors shall have a thermal and mechanical short-circuit current rating. The thermal and mechanical short-circuit rating shall be specified by the purchaser. Typically, the short-circuit rating is determined from the calculated current when any type of fault occurs at the load side terminals with a minimum of 105% of rated system voltage present as measured at the supply side terminals of the reactor. Anticipated system voltages of greater than 105% should be specified and accounted for, as operation of reactors at a higher system voltage than that used for the short-circuit calculation will impose a severe short-circuit duty that may be beyond the mechanical strength of the reactor. It should also be emphasized that system impedance should be considered in arriving at the short-circuit rating of the current-limiting reactor in order to achieve an economic design that fully meets all system requirements. The mechanical short-circuit current rating is based on the worst-case assumption of a simultaneous three-phase fault and the resulting offset peak current. The degree of offset is a function of system damping. The magnitude of the thermal short-circuit current rating is obtained from system fault calculations and the duration is a function of system operating policy including number of “autorecloses” of the breaker, etc. Some useful formulas and a sample calculation follow.

Reference formulas include

$$X_L = \frac{(V_s)^2}{MVA} \tag{1}$$

$$X_R = (V_s)^2\left(\frac{1}{MVA_A} - \frac{1}{MVA_B}\right) \tag{2}$$

$$X_R = \frac{V_s}{\sqrt{3}}\left(\frac{1}{I_{SCA}} - \frac{1}{I_{SCB}}\right) \tag{3}$$

$$I_{SC} = \frac{MVA}{\sqrt{3}\cdot V_s}, I_{SC} = \frac{V_s}{\sqrt{3}}\cdot\frac{1}{X_L} \tag{4}$$

NOTE — The Equation for X_L is correct only for the special case where the system resistance R is zero. In actual systems R is finite. However, the system resistance can be ignored if the R/X ratio is small enough. For an R/X ratio of 0.05 (about the middle of Table 7) the error is about 0.1%.

where

MVA is the three-phase symmetrical system fault level in megavoltamperes,

Copyright © 1997 IEEE All Rights Reserved

Copyright The Institute of Electrical and Electronics Engineers, Inc.
Provided by IHS under license with IEEE
No reproduction or networking permitted without license from IHS Not for Resale

MVA_B is the three-phase symmetrical system fault level on the source side of a series reactor,
MVA_A is the three-phase symmetrical system fault level on the load side of a series reactor,
X_L is the total, per-phase, system equivalent series reactance, in ohms,
X_R is the reactance of series reactor in ohms,
V_S is the system line-to-line rms voltage in kilovolts,
I_{SC} is the rms short-circuit current in kiloamperes,
I_{SCB} is the per-phase, system fault current, in kiloamperes, excluding the use of a series reactor, and
I_{SCA} is the per-phase, system fault current, in kiloamperes, including the use of a series reactor.

A sample calculation is as follows:

a) Rated system voltage is equal to 13.8 kV,
b) Fault level is equal to 100 MVA at 105% of rated system voltage,
c) Reduce fault level to 50 MVA at 105% of rated system voltage.

The existing system series reactance is

$$X_L = \frac{(13.8 \cdot 1.05)^2}{100} = 2.10\Omega \quad (5)$$

The total series reactance required to limit fault level to 50 MVA and accounting for a nominal operating overvoltage of 105% is

$$X_L = \frac{(13.8 \cdot 1.05)^2}{50} = 4.20\Omega \quad (6)$$

Therefore, the required value of the series reactor reactance is

$$X_R = 4.20 - 2.1 = 2.10\Omega \quad (7)$$

The symmetrical rms fault-current rating of the reactor is

$$I_{SCA} = \frac{(13.8 \cdot 1.05)}{\sqrt{3}} \cdot \frac{1}{4.2} = 2.0 \text{ kA} \quad (8)$$

5.6.2 Short-Circuit mechanical stresses

Under short-circuit conditions, the electromagnetic forces and associated stresses in the windings and ancillary components of dry-type air-core reactors can reach values tens to hundreds of times those seen under steady-state operating conditions. Forces and stresses are proportional to the square of the magnitude of the current. Windings are subjected to simultaneous hoop and compressive forces. Input and output current-carrying bus or cable (including the terminals to which they are attached) must withstand vectoral loads that vary with the spatially changing pattern of the dry-type air-core reactor's magnetic field. The reactor's mechanical clamping structure and support elements are exposed to direct acting forces (if they carry current) as well as reaction forces.

5.6.3 Mechanical short-circuit current rating

The mechanical short-circuit current rating shall be expressed as maximum crest asymmetrical amperes. The maximum crest of an asymmetrical current shall be determined by the purchaser through system knowledge and the use of Equation (9). If not specified by the purchaser, the maximum crest asymmetrical current should be considered as 2.55 times the rms symmetrical current ($I_{pk} = 2.55 \cdot I_{rms}$).

Copyright © 1997 IEEE All Rights Reserved

Copyright The Institute of Electrical and Electronics Engineers, Inc.
Provided by IHS under license with IEEE
No reproduction or networking permitted without license from IHS Not for Resale

The mechanical short-circuit current rating shall be verified by a design test and/or calculation. The method of calculation is to be agreed upon by the manufacturer and the purchaser.

5.6.4 Thermal short-circuit current rating

Series (current-limiting) reactors shall have a thermal short-circuit current rating of magnitude based on the rms symmetrical fault current as specified in 5.6.1. The duration should be specified by the purchaser and should typically take into consideration system protection practices such as breaker interrupting time, breaker autoreclose sequence, etc.

The thermal short-circuit current rating shall be expressed in rms symmetrical amperes.

Typical values for the duration of the thermal short-circuit current rating are 1, 2, or 3 s. The actual required duration should be specified by the purchaser. If not specified by the purchaser, the duration of the thermal short-circuit current should be considered to be 3 s.

NOTE — Duration of short-circuit current can impact the cost of a current-limiting reactor; therefore, it is in the purchaser's best interest to specify a realistic value of time.

The thermal short-circuit current rating shall be verified by a design test and/or calculation. The calculation method is found in 11.7.

5.6.5 Enclosures

When reactors are used in enclosures, a number of precautions should be observed. For fiberglass enclosures, large metallic auxiliary parts (e.g., ventilation screens) should be grounded so as to avoid shorted loops that could be subject to heavy current flow and damaging forces under short-circuit conditions. Metal enclosures should be designed using the principles of sectionalization and isolation in order to avoid overheating under steady-state operating conditions and permanent distortion, excessive temperature, or sparking under short-circuit conditions.

NOTE — The design of enclosures for use with air-core series reactors requires extensive engineering expertise and proper coordination with the reactor design. It is therefore recommended that the design of enclosures be left to the reactor manufacturer. Manufacture of the enclosures should also be left to the reactor manufacturer unless design details are supplied.

6. Tests

6.1 Routine, design, and other tests for series reactors

Tests for dry-type series reactors are listed in Table 3.

Copyright © 1997 IEEE All Rights Reserved

Copyright The Institute of Electrical and Electronics Engineers, Inc.
Provided by IHS under license with IEEE
No reproduction or networking permitted without license from IHS Not for Resale

Table 3—Routine, design, and other tests for dry-type series reactors

Test	When performed	Test classification		
		Routine	Design	Other
Resistance measurement	The dc resistance measurement shall be made on all units.	X		
Impedance measurement	The impedance measurement shall be made on all units.	X		
Total loss measurement	Total losses should be measured on all counts.	X		
Temperature rise test	This test is performed on one unit out of a number of units of the same design.		X	
Applied voltage test	The applied voltage test shall be made only on support insulators when specified.			X
Radio influence voltage (RIV) test	This test is performed for nominal system voltages 230 kV and above only when specified.			X
Turn-to-Turn test	This test is performed for nominal system voltages of 34.5 kV and below.	X		
Lightning impulse test —Nominal system voltage greater than 34.5 kV —Nominal system voltage at or below 34.5 kV	The lightning impulse test should be performed on all units. The lightning impulse test should be performed only when specified.	X		X
Switching impulse test	The switching surge test shall be made on the support structure (insulators) of series reactors rated 115 kV or above only when specified.			X
Chopped-Wave impulse test	The chopped-wave impulse test shall be made on series reactors only when specified.			X
Audible sound test	Units shall be tested only when specified.			X
Seismic verification test	The seismic verification test shall be made on series reactors only when specified.			X
Short-Circuit test			X	

6.1.1 Routine tests

A routine test is a test made on each and every unit of a specific design and is primarily a verification of quality. Routine tests shall be made on all series reactors in accordance with the requirements of Table 3.

6.1.2 Design tests

A design test (also referred to as a type test) is a test carried out on a single unit of a specific design and is primarily a verification of the ability to meet in-service application requirements. Design tests shall be made on all series reactors in accordance with the requirements of Table 3.

Copyright © 1997 IEEE All Rights Reserved

Copyright The Institute of Electrical and Electronics Engineers, Inc.
Provided by IHS under license with IEEE
No reproduction or networking permitted without license from IHS Not for Resale

6.1.3 Other tests

A test designated as “other” is a test performed on one or all units of a specific design if requested by the purchaser. It is usually requested to demonstrate conformance to special application requirements as opposed to the more general application requirements covered by design tests. When specified (as individual tests), “other” special tests, as listed in Table 3, shall be made on series reactors.

6.2 Where tests are to be made

All tests are to be made at the manufacturer’s plant, a recognized independent test laboratory, or other suitable facility unless specified otherwise.

6.3 Test sequence

The listing of tests shown in Table 3 does not necessarily indicate the sequence in which the tests shall be made. All tests are defined and shall be made in accordance with Clause 11

6.4 Test procedures

The test procedures of this standard describe accepted methods used in making the tests and specify the tests that will demonstrate performance to rating. They do not preclude the use of other equivalent or more effective methods of demonstrating ratings based on agreement between manufacturer and purchaser.

7. Losses and impedance

7.1 Losses

7.1.1 Tolerance on losses

A tolerance on losses is utilized for two purposes: first, for commercial evaluation, and second, to provide the basis of a quality check.

7.1.1.1 Tolerance on losses for commercial evaluation

As energy costs increase, losses become a more significant component of total operating cost and, as such, may be evaluated by the purchaser. Therefore, compliance to guaranteed losses becomes part of the commercial contract. A tolerance on losses, to account, for instance, for measurement tolerances etc., may be part of the contractual agreement. Additionally, the contract may specify such guarantee criteria as maximum loss per unit, average loss for all units, total “package” losses, etc. In any case, this is purely a commercial matter between the purchaser and the manufacturer.

The only warning that should be stressed is that if a unit exceeds guaranteed loss, aside from the commercial implications (which are a matter between the manufacturer and the purchaser), it is essential to demonstrate that temperature rise limits for the insulation system employed are not exceeded.

7.1.1.2 Tolerance on losses as the basis of a quality check

The losses on any individual reactor unit shall not differ from the average loss of all units of the same design by more than 6%. For single-phase units, the average loss shall be calculated by using the measured losses on each individual

 Copyright © 1997 IEEE All Rights Reserved

Copyright The Institute of Electrical and Electronics Engineers, Inc.
Provided by IHS under license with IEEE
No reproduction or networking permitted without license from IHS Not for Resale

unit. For three-phase stacked reactors, the average loss for each phase shall be calculated by using the per-phase losses measured on a three-phase basis on each individual coil of a three-phase stacked reactor. For three-phase stacked reactors, the 6% tolerance on losses applies to units of the same phase.

If any of the individual units exceeds this tolerance, the manufacturer shall initiate an investigation in order to find the cause of this deviation. In order for acceptance to be considered, the manufacturer shall demonstrate to the purchaser, by either calculation and/or test, that the deviation will not impair the ability of the unit to meet the other requirements of this standard, including the temperature rise limits.

7.2 Impedance

7.2.1 Tolerance on impedance

Tolerances on impedance apply over a current range from zero to full short-circuit rating.

7.2.2 Impedance of a single-phase reactor

The impedance of a single-phase reactor, or of the minimum tap of a single-phase reactor having more than one impedance rating, shall not vary more than +7% or –3% from its guaranteed value. The impedance for all other connections shall not vary more than +10% or –3% from the guaranteed value.

7.2.3 Self-Impedance of a three-phase reactor

The self-impedance of each phase of a three-phase reactor, or of the minimum tap of a three-phase reactor having more than one impedance rating, shall not vary more than +7% or –3% from its guaranteed value. The self-impedance for all other connections shall not vary more than +10% or –3% from the guaranteed value.

7.2.4 Voltage drop

The voltage drop across each phase of a three-phase reactor, or of the minimum tap of a three-phase reactor having more than one rated voltage drop, with balanced three-phase rated current, shall be not more than 14% above or 3% below the guaranteed value. The voltage drop for all other connections shall be not more than 16% above or 3% below the guaranteed value.

7.2.5 Compensation for mutual impedance

When three-phase reactors are specified to be compensated for mutual impedance to provide balanced three-phase voltage drops, the minimum self-impedance of any phase shall be not less than 75% of the guaranteed value. Usually power systems are designed such that single-phase short-circuit currents are lower than three-phase short-circuit currents. However, it should be recognized that single line-to-ground faults on a system with a grounded neutral may result in fault currents in the lowest self-impedance phase higher than the three-phase fault currents. If no system impedance is considered, fault currents in the lowest self-impedance phase can be as high as 1.33 times the three-phase fault currents.

7.3 Impedance and losses test

Since dry-type air-core reactors have no iron core, the impedance and losses may be measured at any value of current and the losses corrected to rated current. For temperature correction, refer to 11.4.2.

If a wattmeter is used to determine losses, then impedance can be calculated by measuring simultaneous current and voltage and dividing the voltage by the current. Bridge methods allow the simultaneous measurement of reactance (inductance) and effective resistance, from which impedance and losses can be calculated.

Copyright © 1997 IEEE All Rights Reserved

--`,-`-`,,`,,`,`,,`---

Copyright The Institute of Electrical and Electronics Engineers, Inc.
Provided by IHS under license with IEEE
No reproduction or networking permitted without license from IHS Not for Resale

8. Temperature rise

8.1 Considerations in establishing limits of temperature rise

8.1.1 Life of insulating materials

The life of insulating materials commonly used in dry-type series reactors depends largely upon the temperatures to which they are subjected and the duration of such temperatures.

Since the actual temperature is the sum of the ambient temperature and the winding temperature rise, it is apparent that the ambient temperature very largely influences the life of insulating materials used in dry-type series reactors.

Other factors upon which the life of insulating materials depend are as follows:

a) Dielectric stress and associated effects
b) Vibration or varying mechanical stress
c) Repeated expansions and contractions
d) Exposure to moisture, contaminants, etc.
e) Overloading (current) of the device

8.1.2 Insulating materials

Currently, a wide range of conductor insulating materials are available. Most materials utilized today are polymers, which tend to be available in tape form, enamels or varnishes, and extrudable format. Selection of a conductor insulation material may be a function of thermal requirements, voltage requirements, mechanical requirements, or other service considerations. Because materials can exhibit different performance capabilities under various operating conditions, individual materials or combination of materials can be used in reactors of different temperature classes depending on the end application. It is for this reason that materials are no longer defined as Class B, F, or H, and are now assigned temperature indices. Each temperature index assigned to a material carries the implied descriptors of temperature, number of serviceable hours at that temperature, and end of life criteria. In general terms, an insulating material can be assigned more than one specific temperature index depending on the end of life criteria and performance characteristics desired. Therefore, because materials can exhibit different performance capabilities under various construction formats and operating conditions, the classification of a dry-type reactor as being of a particular temperature class does not imply that each individual material used in its construction is of the same thermal capability. The assignment of the temperature index of the insulation system and of the associated “hot spot” temperature rise is the responsibility of the reactor manufacturer. Only experience or adequate acceptance tests provide a basis for defining the temperature limits for the insulation system.

8.1.3 Thermal rating of materials and systems

Individual insulation and encapsulation materials may be assigned a temperature index based on maintenance of a certain performance characteristic for a specified number of hours at a specified temperature. However, in the case of dry-type air-core series reactors, it is not the performance characteristics of the constituent materials by themselves that is of interest; it is the performance of the system. Therefore, in designing dry-type air-core reactors for appropriate service life, it is not sufficient just to know the capabilities of the constituent materials; it is the performance of the system of materials that is critical.

Although performance at temperature is one of the main evaluating criteria for materials, multifactor aging effects also need to be considered, especially for the overall system. The assessment of what the important interactive aging mechanisms are is really in the jurisdiction of the manufacturer. Interactive aging mechanisms that might have to be considered are temperature, electrical stress, thermal shock, mechanical load cycling, and environmental criteria.

Copyright © 1997 IEEE All Rights Reserved

Copyright The Institute of Electrical and Electronics Engineers, Inc.
Provided by IHS under license with IEEE
No reproduction or networking permitted without license from IHS Not for Resale

Multifactor aging studies to establish the long-term performance of insulation materials are usually carried out based on principles in IEEE Std 1-1986.

8.1.4 Limits of temperature rise and duty of current-limiting reactors

Because series reactors are used in series with other equipment on the power system, the current through the reactor usually varies as the connected load changes. Therefore, series reactors do not operate at full rated current for much of their life.

Similar series-connected equipment (i.e., power line carrier wave traps; see ANSI C93.3-1995) typically have higher allowable winding temperature rise values due to variation in duty. Conversely, shunt reactors inherently have a very high continuous duty, with their current varying only with the applied voltage. Therefore, they have lower maximum winding temperature rise limits (see IEEE Std C57.21-1990) than series-connected equipment, since the winding will be at maximum design temperature rise for most of its connected lifetime.

Therefore, duty was also a major factor in arriving at the temperature rise limits in Table 4 of this standard.

8.1.5 Experience factor in establishing temperature rise limits for dry-type air-core series reactors

Although knowledge of the thermal capabilities of the constituent materials in a dry-type-air-core series reactor can provide a basis for establishing the allowable temperature rise limit for the reactor, service experience is also a significant determiner. This was an important criterion in arriving at the temperature rise limits in Table 4 of this standard. For this reason, the average temperature rise limits and hot spot temperature rise limits in Table 4 were arrived at both from the point of view of the temperature index of the insulation system and also from the application experience (including duty) and service history obtained from the application of reactors designed to identical temperature rise limits in the previous edition of this standard (ANSI C57.16-1958).

8.2 Limits of temperature rise

8.2.1 Standard limits of temperature rise

The standard limits of temperature rise of series reactors shall be as given in Table 4. Specifically, series reactors shall be so designed that the hottest-spot conductor temperature rise above the ambient temperature when operated at rated current will not exceed the values given in Table 4.

8.2.2 Enclosed reactor

When a dry-type air-core reactor is enclosed, external parts that can be touched shall not exceed a 30 °C temperature rise.

8.2.3 Temperature rise of reactor parts

The temperature rise above the ambient temperature of reactor parts in contact with the insulation or encapsulation material, when operated at rated current, shall not exceed the values given in Table 4. The temperature rise limit shall be based on the specific insulation temperature index of the insulation and encapsulation materials; whichever is in contact with the metallic part. For procedures in determining temperature rise, see 11.5.

Copyright © 1997 IEEE All Rights Reserved

Copyright The Institute of Electrical and Electronics Engineers, Inc.
Provided by IHS under license with IEEE
No reproduction or networking permitted without license from IHS Not for Resale

Table 4—Limits of temperature rise for continuously rated dry-type air-core series reactors

Item	Insulation temperature index (°C)	Average winding temperature rise by resistance (°C)	Hottest-spot winding temperature rise (°C)
1	105	55	85
	130	80	110
	155	100	135
	180	115	160
	220	140	200
2	Metallic parts in contact with or adjacent to the insulation shall not attain a temperature in excess of that allowed for the hottest spot of the windings adjacent to that insulation.		
3	Metallic parts other than those covered in item 2 shall not attain excessive temperature rises.		

NOTES:

1 — Temperature rise is rise above ambient in degrees Celsius.

2 — A reactor with a specified temperature rise shall have an insulation temperature index that has been proven by experience or testing.

3 — The insulation temperature index in Table 4 is supplied as a reference and is based on the preferred temperature index for insulation materials as defined in IEEE Std 1-1986. It should be noted that the preferred temperature index is the lowest value in a number range (of temperatures) into which insulation materials can be placed. This ensures an element of conservatism in the thermal performance of an insulation system and thus constitutes part of the experience factor in assigning temperature rise limits.

4 — The above average temperature rises and hot spot temperature rises are maximum upper limits. Hottest-spot winding temperature rise limits are based on the accepted experience that series reactors are subject to significant variation in duty. The reference ambient temperature is considered to be a 20 °C annual average ambient temperature in conjunction with the capability to operate in a 40 °C maximum ambient when the 24 h average is 30 °C. Specified temperature limits may be lower due to such service considerations as high average ambient temperature conditions, prolonged exposure to high ambients, indoor vs. outdoor service, high continuous duty (limited “load cycling”), and loading profile (specified overloads).

5 — The average winding temperature rise limits are based on the attempt to achieve a fixed 40% differential between hot spot rise and average rise. However, it should not be construed that the difference between maximum hot spot rise and average rise is a hot spot allowance. There are so many design variables involved that it is not possible to arrive at a meaningful single value. Nevertheless, it should be stressed that the intent is that neither the average winding rise nor the hottest spot winding rise should be exceeded. Since it is hot spot temperature rise that determines the life of a reactor, based on agreement between the manufacturer and purchaser, the average temperature rise can be safely exceeded for some reactor designs provided the hot spot rise limit is respected and verified.

6 — Consideration should be given to specifying reduced temperature rise limits for reactors utilized on generator lines, interties, etc. In these types of applications, equipment is usually fully loaded most of the time, as opposed to more usual applications where equipment is loaded based on varying duty (“load cycled”).

8.2.4 Temperature rise of terminals

The temperature rise of a dry-type air-core series reactor’s terminals furnished by the reactor manufacturer for connection to the user’s circuits shall, in general, not exceed 60 °C. Service experience has demonstrated the validity of this guideline. However, if appropriate, a choice of terminal plating material, contact aids, bolting technique, etc., can make higher terminal operating temperatures possible. If more information is required regarding terminal operating temperatures, surface contact preparation, electrical contact aids, plating materials, etc., then [B1] , [B2] , [B3] , and [B6] can be consulted.

Copyright © 1997 IEEE All Rights Reserved

Copyright The Institute of Electrical and Electronics Engineers, Inc.
Provided by IHS under license with IEEE
No reproduction or networking permitted without license from IHS Not for Resale

NOTE — It should be recognized that the terminals of reactors, of necessity, come at the ends of the winding where the flux density may be almost as high as it is inside the coil. Therefore, it is important, especially for high-current reactor units, to use appropriate connectors, preferably those that present a streamlined geometry to the magnetic field. It is also critical to ensure that the dimensions and the direction of approach of the user's conductors are such as to not increase the eddy losses; otherwise, the temperature rise of the connection may be greatly increased. If the user's conductor insulation is limited to a lower temperature rise than that allowed for the reactor terminal, a section of bare conductor that will radiate sufficient heat to provide the desired temperature differential should be inserted by the user.

8.3 Temperature rise tests

8.3.1 Test methodology

This test shall be made by passing rated current through the reactor until the temperature rise becomes constant, and then determining the hottest-spot temperature rise, where practicable, together with the average winding temperature rise. The temperature rise tests shall be made in a room that is essentially draft-free.

NOTES:

1 — When the available test power does not permit making the test at rated current, then the manufacturer shall demonstrate to the user that reduced current testing produces sufficiently accurate results when extrapolated to rated current level. The manufacturer shall notify the user of reduced current level testing during the proposal stage.

2 — For higher current rated units, knowledge of in-service terminal temperature rise may be of importance. In this case, consideration should be given to performing the temperature rise test with the actual connectors to be used in service, especially if they differ from those recommended by the manufacturer. If the connectors are not supplied by the manufacturer, the end user should supply them. It is important to ensure that conditions for such a test truly reflect in-service operating conditions, or erroneous results may be obtained. Test conditions must be agreed to by manufacturer and end user.

8.3.2 Hottest-Spot determination

The hottest-spot temperature rise for dry-type series reactors shall be determined by thermometer where the use of thermocouples poses a hazard due to high voltage.

8.3.3 Ambient temperature

Ambient temperature is the temperature of the air surrounding the reactor.

8.3.4 Methods of temperature determination

8.3.4.1 Thermometer method of temperature determination

The thermometer method consists of determining the temperature by mercury or alcohol thermometers, by resistance thermometers, or by thermocouples, any of these instruments being applied to the hottest part of the apparatus accessible to mercury or alcohol thermometers.

8.3.4.2 Resistance method of temperature determination

The resistance method consists of the determination of the temperature by comparison of the resistance of a winding at the temperature to be determined, with the resistance at a known temperature.

Copyright © 1997 IEEE All Rights Reserved

Copyright The Institute of Electrical and Electronics Engineers, Inc.
Provided by IHS under license with IEEE
No reproduction or networking permitted without license from IHS Not for Resale

9. Insulation levels and dielectric tests

9.1 Impulse insulation levels

The standard impulse insulation levels for series reactors are given in Table 5, column 5. These values are expressed in terms of the crest value of a 1.2 x 50 μs full wave.

Table 5—Insulation test levels for dry-type air-core series reactors

Nominal system voltage (kV)	Applied voltage test (kV) rms	Turn-to-Turn overvoltage		BIL and full wave (kV) crest	Chopped-Wave (kV) crest	Time to flashover (μs)	Switching impulse (kV) crest
		Indoor (kV) rms	Outdoor (kV) rms				
Column 1	Column 2	Column 3	Column 4	Column 5	Column 6	Column 7	Column 8
1.2	10	10	13	45	50	1.25	—
2.5	19	19	25	60	66	1.5	—
5.0	26	26	35	75	83	1.6	—
8.7	36	36	48	95	105	1.8	—
15.0	50	50	67	110	120	2.0	—
25.0	70	70	93	150	165	3.0	—
34.5	95	95	127	200	220	3.0	—
46.0	120	—	—	250	275	3.0	—
69.0	120	—	—	250	275	3.0	—
	175	—	—	350	385	3.0	—
115.0	175	—	—	350	385	3.0	280
	—	—	—	450	495	3.0	375
	280	—	—	550	605	3.0	460
138.0	—	—	—	450	495	3.0	375
	280	—	—	550	605	3.0	460
	335	—	—	650	715	3.0	540
161.0	280	—	—	550	605	3.0	460
	335	—	—	650	715	3.0	540
	385	—	—	750	825	3.0	620
230.0	335	—	—	650	715	3.0	540
	385	—	—	750	825	3.0	620
	—	—	—	825	905	3.0	685
	465	—	—	900	990	3.0	745
	545	—	—	1050	1155	3.0	870

Copyright © 1997 IEEE All Rights Reserved

Copyright The Institute of Electrical and Electronics Engineers, Inc.
Provided by IHS under license with IEEE
No reproduction or networking permitted without license from IHS
Not for Resale

Table 5—Insulation test levels for dry-type air-core series reactors (Continued)

Nominal system voltage (kV)	Applied voltage test (kV) rms	Turn-to-Turn overvoltage		BIL and full wave (kV) crest	Chopped-Wave (kV) crest	Time to flashover (μs)	Switching impulse (kV) crest
		Indoor (kV) rms	Outdoor (kV) rms				
Column 1	Column 2	Column 3	Column 4	Column 5	Column 6	Column 7	Column 8
345.0	465	—	—	900	990	3.0	745
	545	—	—	1050	1155	3.0	870
	—	—	—	1175	1290	3.0	975
500.0	610	—	—	1300	1430	3.0	1080
	680	—	—	1425	1550	3.0	1180
	710	—	—	1550	1705	3.0	1290
	—	—	—	1675	1845	3.0	1390
765.0	810	—	—	1800	1980	3.0	1500
	—	—	—	1925	2120	3.0	1600
	940	—	—	2050	2255	3.0	1700

NOTES:

1 — The nominal system voltage values given above are used merely as reference numbers and do not necessarily imply a relation to operating voltages.

2 — The applied voltage test on dry-type air-core series reactors is a high-voltage test on the insulators.

3 — For some BIL levels associated with a particular system voltage, no low-frequency test voltage is specified as insulators are not manufactured to that BIL rating.

4 — For system voltages greater than 34.5 kV, the turn-to-turn test is not applicable and a full-wave impulse test is to be performed as a routine test.

5 — In the case of series reactors, the BIL across the coil may be different than the BIL across the support insulators (to ground). The purchaser shall specify if the BIL across the coil is to be at a reduced level. Such a decision will be based on factors such as knowledge of the system characteristics and protection practices. Reduced BIL levels shall be selected from the standard values in Table 5.

6 — In the case of dry-type air-core series reactors, switching impulse insulation levels apply only to the support insulators for 115 kV system voltages and above.

7 — In the case of dry-type air-core series reactors employed in a three-phase stack configuration, interphase insulators may have a higher BIL rating than those at the base of the stack that only provide phase-to-ground insulation.

9.2 Dielectric test levels

Standard impulse and low-frequency dielectric tests for series reactors shall be as given in Table 5.

Copyright © 1997 IEEE All Rights Reserved

Copyright The Institute of Electrical and Electronics Engineers, Inc.
Provided by IHS under license with IEEE
No reproduction or networking permitted without license from IHS Not for Resale

9.3 Dielectric tests

9.3.1 Dielectric tests

Dielectric tests are tests that consist of the application of a voltage higher than the rated voltage for a specified time for the purpose of determining the adequacy against breakdown of insulating materials and spacing under normal conditions.

9.3.2 Turn-to-Turn overvoltage test

The turn-to-turn test for dry-type air-core series reactors shall be made by applying between the terminals of each winding a series of high-frequency, exponentially decaying sinusoidal voltages. The test sequence shall consist of a reduced sinusoidal voltage discharge followed by 7200 sinusoidal voltage discharges with a first peak voltage at least equal to times the rms values specified in Table 5, columns 3 or 4. The duration of the test is not to exceed 60 s.

9.3.3 Impulse tests

For dry-type air-core series reactors, a lightning impulse test shall be made on each terminal of the reactor by applying a reduced wave and three full waves, all of positive polarity with crest voltage as specified in Table 5, column 5.

A chopped wave impulse test shall be made on each terminal of the reactor, when specified, by applying one reduced full wave, one full wave, one reduced chopped wave, two chopped waves, followed by two full waves (preferably within 10 min after the last chopped wave), with crest voltage as specified in columns 6 and 5 of Table 5 and time to chop as specified in column 7 of Table 5.

A switching impulse test shall be made, when specified, on the complete support assembly, including insulators, for system voltages 115 kV and higher. The test voltage is of positive polarity. The test should include one reduced and 15 full waves, with crest voltage as specified in Table 5, column 8. Two disruptive discharges (flashovers) are allowed. The purpose of this test is to assess the effect of the geometry of the reactor and ancillary elements of the support structure on the switching impulse withstand of the support insulators. Consideration can be given to performing this test under wet conditions as specified in IEEE Std 4-1995.

9.3.4 Applied voltage test

For dry-type air-core series reactors an applied voltage test shall be made, when specified, on the reactor’s supporting structure, including insulators. For system voltages 230 kV and above, consideration should be given to performing the test under simulated wet conditions. Test values are those indicated in Table 5, column 2.

9.3.5 Radio influence voltage (RIV) test

The RIV test is only required for series reactors operating at system voltages 230 kV and higher and is carried out at power frequency according to NEMA 107-1988. The radio influence voltage of a series reactor shall not exceed the maximum RIV value stated in Table 6, when the series reactor is applied at the stated maximum system voltage. The RIV test should be performed on the reactor and its support structure, if available. The main sources of radio noise are the auxiliary metallic components of the reactor, such as the end electrodes, terminals, insulator mounting brackets, etc.

Copyright © 1997 IEEE All Rights Reserved

Copyright The Institute of Electrical and Electronics Engineers, Inc.
Provided by IHS under license with IEEE
No reproduction or networking permitted without license from IHS Not for Resale

Table 6—Radio influence voltage

System voltage (kV)*		Radio influence test voltage (kV)†	Maximum radio influence voltage (μV)‡
Maximum	Nominal		
242	230	140	250
362	345	209	250
550	500	317	500
800	765	462	750

*The maximum and nominal system voltages are from ANSI C84.1-1995 , Electric Power Systems and Equipment-Voltage Ratings (60 Hertz).

† The radio influence test voltage is the line-to-ground value of the maximum system voltage.

‡ The maximum permissible background RIV level will be 1/2 of the maximum radio influence voltage level (μV) tabulated for each system voltage. Correction for background voltage level shall be by the rms method. These maximum radio influence voltages, as conducted radio noise, will add a negligible amount to the radio noise normally radiated from the line, even at a short distance from the series reactor and its support structure.

10. Short-Circuit capability

10.1 Short-Circuit description

10.1.1 Duration

The duration of the short circuit is limited to 3 s or as specified by the purchaser.

10.1.2 Requirements

When used on circuits having reclosing features, series reactors (current-limiting application) shall be capable of withstanding successive short circuits without cooling to normal operating temperatures between successive occurrences of the short circuit, provided the accumulated duration of short circuit does not exceed 3 s or a duration specified by the purchaser.

10.1.3 Operating conditions

Some of the operating conditions that may result in short-circuit currents in excess of those provided for normal operating conditions are listed below:

a) The short-circuit current will be increased when the series reactor is operated above 105% rated system voltage and a short circuit occurs during a period of such operation.
b) The fault currents may be increased during abnormal conditions, such as out-of-phase voltage conditions on interconnected systems.

10.2 Maximum mechanical stress of series reactors for short-circuit conditions

10.2.1 Initial short-circuit current

For determination of maximum mechanical stresses, the initial short-circuit current shall be assumed to be offset. In a system with zero damping, the maximum crest value of the short-circuit current is two times the crest value of the rms symmetrical short-circuit current. In reality, however, the value is lower due to system damping effects.

Copyright © 1997 IEEE All Rights Reserved

Copyright The Institute of Electrical and Electronics Engineers, Inc.
Provided by IHS under license with IEEE
No reproduction or networking permitted without license from IHS Not for Resale

10.2.2 First cycle asymmetrical peak

The first cycle asymmetrical peak short-circuit current that the reactor is required to withstand shall be specified by the purchaser or, based on knowledge of system damping, can be determined as below. If not specified by the purchaser, the maximum asymmetrical crest value of short-circuit current should be considered to be 2.55 times the rms symmetrical current.

$$I \text{ (peak asymmetrical)} = KI_{sc} \tag{9}$$

where

I_{sc} is the short-circuit current, rms symmetrical, and
K is 2.55, or the appropriate multiplier obtained from Table 7.

NOTES:

1 — The 2.55 value for the asymmetry factor K is based on a dc offset of 1.8 vs. the theoretical maximum value of 2.0. The assumption that a minimum value of system damping is always present is consistent with the practice in IEC standards, i.e., $K = 1.8 \cdot \sqrt{2}$

2 — The R/X ratio in Table 7 is a measure of damping in the system or circuit in question. R is the effective resistance of the system including the reactor, and X is the net reactance in the system including that supplied by the reactor.

Table 7—Value of K for use in Equation (9)

R/X	*K*	*R/X*	*K*	*R/X*	*K*
0.001	2.824	0.01	2.785	0.1	2.452
0.002	2.820	0.02	2.743	0.2	2.184
0.003	2.815	0.03	2.702	0.3	1.990
0.004	2.811	0.04	2.662	0.4	1.849
0.005	2.806	0.05	2.624	0.5	1.746
0.006	2.802	0.06	2.588	0.6	1.669
0.007	2.798	0.07	2.552	0.7	1.611
0.008	2.793	0.08	2.518	0.8	1.568
0.009	2.789	0.09	2.484	0.9	1.534
—	—	0.10	2.452	1.0	1.509

10.2.3 Asymmetry factor K

The multiplier K is calculated from

$$K = [1 + (\varepsilon^{-(\phi + \pi/2)R/X})\sin\phi]\sqrt{2} \tag{10}$$

where

R/X is the ratio of ohms resistance to ohms reactance in the system when the short circuit occurs,
ε is 2.7183, the base of the natural logarithms, and
ϕ is the arctan X/R, in radians.

Copyright © 1997 IEEE All Rights Reserved

Copyright The Institute of Electrical and Electronics Engineers, Inc.
Provided by IHS under license with IEEE
No reproduction or networking permitted without license from IHS Not for Resale

NOTE — The expression for *K* is an approximation. The values of *K* given in Table 7 are calculated from this approximation and are accurate to within 0.7% of the values calculated by exact methods.

10.3 Thermal limit of series reactors for short-circuit conditions

10.3.1 Limiting temperature

The temperature, as calculated by methods given in 11.7.1, of the conductor material in the windings of reactors under the short-circuit conditions specified in 10.1 shall not exceed the limiting values given in Table 8.

Table 8—Limiting temperature for rated short-term current

Insulation temperature index (°C)	Actual limiting temperature (°C)
105	205
130	285
155	315
180	350
220	400
NOTE — The above limiting temperatures are upper bounds based on the known capabilities of available materials. The actual limit used on design must be modified based on the winding insulation and encapsulation materials utilized.	

10.4 Mechanical short-circuit test

10.4.1 Mechanical strength capability

The test for the mechanical strength capability of the series (current-limiting) reactor shall be made at a specified test current for a duration of not less than 10 cycles at rated frequency with the first maximum crest value of the completely offset short circuit not less than the maximum crest value as given in 10.2.2 or as specified by the purchaser.

11. Test code

11.1 General

11.1.1 Symbols

In this test code an effort is made to use a uniform set of symbols, without, however, sacrificing simplicity or clarity. Following are the main symbols:

E	voltage
I	current
P	active power (in-phase component)
Q	reactive power (quadrature component)
kVA or *VA*	apparent power

Copyright © 1997 IEEE All Rights Reserved

Copyright The Institute of Electrical and Electronics Engineers, Inc.
Provided by IHS under license with IEEE
No reproduction or networking permitted without license from IHS Not for Resale

Z	impedance
R	resistance
X	reactance
L	inductance, self
C	capacitance
θ	temperature, as indicated, in degrees Celsius
C_θ	thermal capacitance, heat capacity
t	time
ϕ	impedance angle, in degrees
F, m, a, k	factor, as indicated

11.1.2 Subscripts and symbols

Subscripts and other symbols will be used as locally identified.

11.1.3 Schedule of tests

The usual program of testing a reactor includes some or all of the following tests:

Tests	Subclause
Resistance measurements	11.2
Dielectric tests	11.3
Losses and impedance	11.4
Temperature rise	11.5
Short-Circuit test	11.6
Short-Circuit calculations	11.7

11.2 Resistance measurements

11.2.1 Necessity for resistance measurements

Resistance measurements are of fundamental importance for three purposes:

a) For the calculation of the conductor I^2R loss.
b) For the calculation of winding temperatures at the end of a temperature rise test.
c) For a quality check among units of the same rating.

11.2.2 Conversion of resistance measurements

Cold winding resistance measurements are normally converted to a standard reference temperature equal to the rated average winding temperature rise plus 20 °C. In addition, it may be necessary to convert the resistance measurements to the temperature at which the impedance and loss measurements were made. The conversions are accomplished by the following formula:

$$R_s = R_m \frac{(\theta_s + T_k)}{\theta_m + T_k} \tag{11}$$

Copyright © 1997 IEEE All Rights Reserved

Copyright The Institute of Electrical and Electronics Engineers, Inc.
Provided by IHS under license with IEEE
No reproduction or networking permitted without license from IHS Not for Resale

where

R_s is the resistance at desired temperature θ_s,
R_m is the measured resistance at temperature θ_m,
θ_s is the desired reference temperature, in degrees Celsius,
θ_m is the temperature at which resistance was measured, in degrees Celsius, and
T_k is 234.5 (copper), 225 (aluminum).

NOTE — The manufacturer shall use the appropriate value of T_k for the specified conductor material used and shall advise the purchaser accordingly.

11.2.3 Determination of cold temperature

The cold temperature of the winding shall be determined as accurately as possible when measuring the cold resistance. The precautions in the following subclauses shall be observed.

11.2.3.1 General

Cold resistance measurements shall not be taken in less than 4 h after the reactor has been moved from one location to another where the ambient temperatures differ by more than 5 °C, but less than 10 °C. Measurements should not be taken in less than 8 h if the temperature difference is more than 10 °C.

NOTE — The above guidelines apply to dry-type air-core series reactors with typical thermal time constants between 30 and 60 main. In the case of very large reactors with a thermal time constant over 60 min, the waiting times should be increased to 5 and 10 times the actual thermal time constant, respectively.

11.2.3.2 Reactor windings

The temperature of the windings shall be recorded as the average of several thermocouples or thermometers located along the winding with extreme care used to ensure that their functional end or bulbs are as nearly as possible in actual contact with the windings. It should not be assumed that the windings are at the same temperature as the surrounding air.

11.2.3.3 Drop-of-Potential method

11.2.3.3.1 Measurements made in the field

The drop-of-potential method is generally more convenient than the bridge method for measurements made in the field.

11.2.3.3.2 Accuracy

In all cases, greater accuracy may be obtained by the use of potentiometers for the measurement of both current and potential, although the setup may be rather cumbersome.

11.2.3.3.3 Simultaneous readings

Measurements are made with direct current, and simultaneous readings of current and voltage are taken using the connections of Figure 1. The required resistance is calculated from the readings in accordance with Ohm’s law.

11.2.3.3.4 Errors of observation

In order to minimize errors of observation, the measuring instruments insofar as possible shall have such ranges as will give reasonably large deflections or, if digitally based, they should provide readouts of several significant digits accurately.

Copyright © 1997 IEEE All Rights Reserved

Copyright The Institute of Electrical and Electronics Engineers, Inc.
Provided by IHS under license with IEEE
No reproduction or networking permitted without license from IHS Not for Resale

11.2.3.3.5 Voltmeter leads

The voltmeter leads shall be connected as closely as possible to the terminals of the winding to be measured. This is to avoid including in the reading the resistances of current-carrying leads and their contact and of extra lengths of leads.

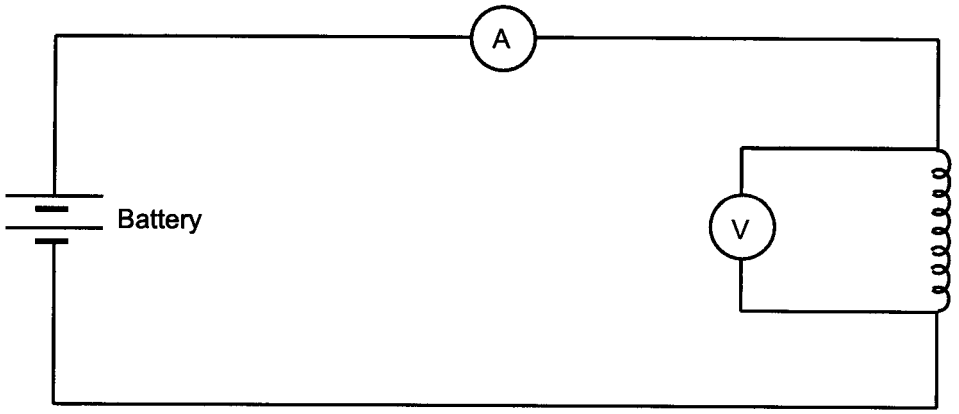

Figure 1—Connections for the drop-of-potential method of resistance measurement

11.2.3.3.6 Voltmeter protection

To protect the voltmeter from injury by off-scale deflections, the voltmeter should be disconnected from the circuit before switching the current on or off.

11.2.3.3.7 Low drop of potential

If the drop of potential is less than 1 V, a potentiometer or millivoltmeter shall be used.

11.2.3.3.8 Steady-State values

Readings shall not be taken until after the current and voltage have reached steady-state values.

11.2.3.3.9 Number of readings

Readings shall be taken with not less than four values of current when deflecting instruments are used. The average of the resistances calculated from these measurements shall be considered to be the resistance of the circuit.

11.2.3.3.10 Percent of rated continuous current

The current used shall not exceed 15% of the rated continuous current of the winding whose resistance is to be measured. Larger values may cause inaccuracy by heating the winding and thereby changing its temperature and resistance.

11.2.3.3.11 Low current

If the current is too low to be read on an available ammeter, a shunt and a potentiometer shall be used.

Copyright © 1997 IEEE All Rights Reserved

Copyright The Institute of Electrical and Electronics Engineers, Inc.
Provided by IHS under license with IEEE
No reproduction or networking permitted without license from IHS Not for Resale

11.2.3.4 Bridge methods

Bridge methods are generally preferred because of their accuracy and convenience.

11.2.3.4.1 Bridge methods

Bridge methods are especially recommended for all measurements that are to be used in connection with temperature-rise determination.

11.2.3.4.2 “Thermoelectric effects”

In order to avoid “thermoelectric effects” that are more pronounced when measuring hot dc resistance, the leads for connection to the bridge, including the mechanism utilized to connect to the reactor terminals, should be of the same material as the windings and terminals of the reactor on which measurements are being made—e.g., copper for copper-wound reactors, and aluminum for aluminum-wound reactors.

11.3 Dielectric tests

11.3.1 Methodology

Unless otherwise specified, dielectric tests shall be made in accordance with IEEE Std 4-1995. Dielectric tests apply to enclosures with built-in leads when they are so furnished.

11.3.2 Factory dielectric tests

11.3.2.1 Purpose

The purpose of dielectric tests in the factory is to check the insulation and workmanship and to demonstrate that the reactor has been designed to withstand the insulation tests required by the purchase specification.

11.3.3 Applied-Voltage test

11.3.3.1 General

In the case of dry-type air-core series reactors, the major insulation to ground is supplied by the support insulators. Therefore an applied voltage test is a test on the support insulators.

11.3.3.2 Method

Consideration should be given to performing this test wet for 230 kV and above designs only. Test values are those indicated in Table 5, column 2. The rationale for this is that the larger geometries associated with some high-voltage reactors of high Mvar rating may result in nonuniform wetting of the support insulators in service. IEEE Std 4-1995 can provide guidance on how to perform this test.

11.3.4 RIV test

The RIV test shall be performed at power frequency with the series reactor suitably supported in order to determine the RIV produced by the series reactor itself. If the field-installed support structure is available, then the test can be carried out in this configuration. The equipment and general method used in determining the RIV shall be in accordance with the NEMA 107-1988. The RIV shall not exceed the value in accordance with 9.3.5 and Table 6.

Copyright © 1997 IEEE All Rights Reserved

Copyright The Institute of Electrical and Electronics Engineers, Inc.
Provided by IHS under license with IEEE
No reproduction or networking permitted without license from IHS Not for Resale

11.3.5 Turn-to-Turn overvoltage test for dry-type series reactors

The turn-to-turn test is performed by repeatedly charging a capacitor and discharging it, through sphere gaps, into the reactor windings. The type of overvoltage that the reactor is subjected to is more representative of a switching overvoltage, with an exponentially decaying sinusoidal waveshape. The test duration is for 1 min and the initial crest value of each discharge is to be $\sqrt{2}$ times the rms value as specified in Table 5. The ringing frequency is a function of the coil inductance and charging capacitor, and is typically on the order of 100 kHz. The test shall consist of not less than 7200 overvoltages of the required magnitude.

Primary verification of winding insulation integrity should be based on oscillographic methods. A surge oscilloscope and camera are used to record the last discharge superimposed on a reduced voltage discharge. A change in period or rate of envelope decay, between the reduced and full waves, would indicate a change in coil impedance and thus an interturn failure. The crest test voltage level is $\sqrt{2}$ times the rms voltages listed in column 3 or 4 of Table 5.

Secondary verification of insulation integrity is by observation. A failure can be detected by noise, smoke, or spark discharge in the reactor windings.

Figure 2 shows the schematic of the test circuit and representative oscillograms of applied test voltage. The use of oscillograms for failure detection is based on change in ringing frequency and a change in rate of envelope decay (damping).

11.3.6 Standard impulse tests

A lightning impulse test is required as a routine test for dry-type reactors with nominal system voltages greater than 34.5 kV. The test shall consist of and be applied in the following order: one reduced full wave and three full waves. Both terminals of the reactor shall be tested. Dry-Type series reactors 34.5 kV and below shall be tested only when specified. Dry-Type reactors rated 34.5 kV and lower shall be tested with the turn-to-turn overvoltage test.

When an optional chopped-wave test is specified, impulse tests are generally applied in the following order: one reduced full wave, one full wave, one reduced chopped wave, two chopped waves, and two full waves (preferably within 10 min after the last chopped wave).

Please note that other reduced full waves may be applied at any time during the test sequence as deemed necessary.

Impulse tests apply also to enclosures with built-in leads when they are so furnished.

Refer to IEEE Std C57.98-1994 for guidance on impulse testing techniques, interpretation of oscillograms, and failure detection criteria.

Copyright © 1997 IEEE All Rights Reserved

Copyright The Institute of Electrical and Electronics Engineers, Inc.
Provided by IHS under license with IEEE
No reproduction or networking permitted without license from IHS Not for Resale

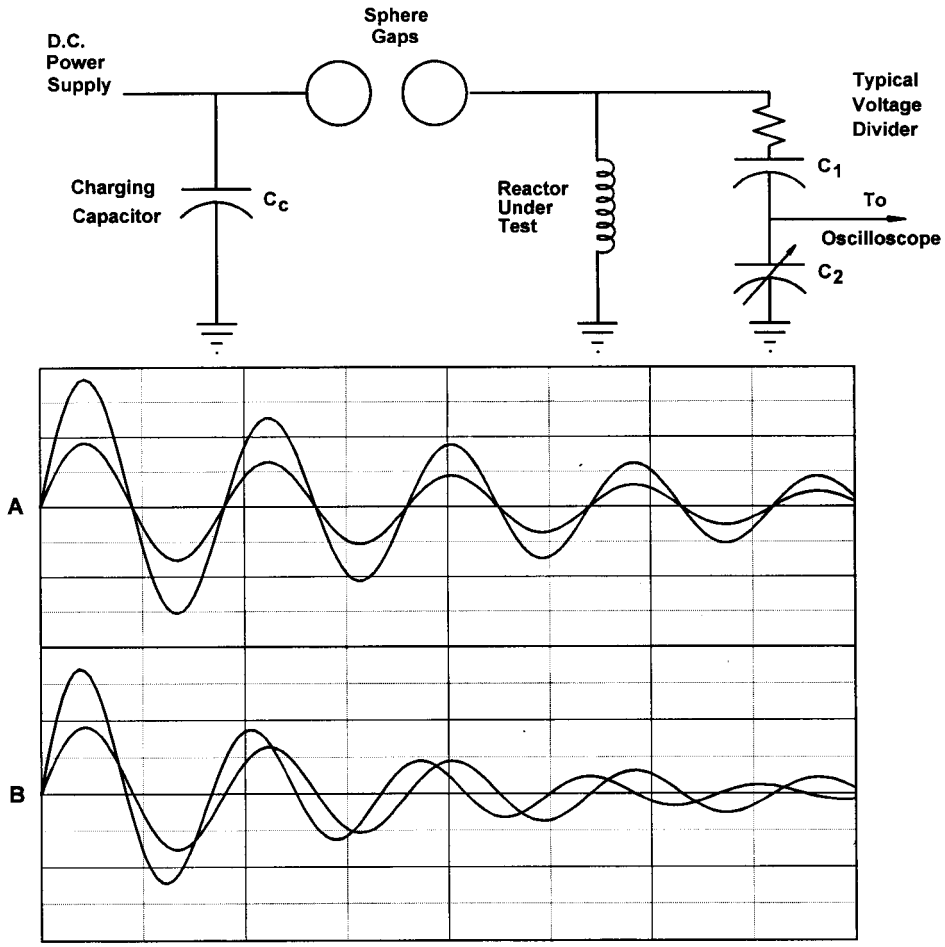

A: Oscillogram showing a reactor that passed the turn-to-turn test.
B: Oscillogram showing a reactor of the same rating as in Oscillogram A, but having a turn-to-turn fault. Note the shift in frequency and the increased damping.

Figure 2—Turn-to-Turn test circuit and sample oscillograms

11.3.6.1 Full-Wave test

The full wave rises to crest in 1.2 μs and decays to one-half of crest value in 50 μs from the virtual time zero. The crest value shall be in accordance with the assigned BIL, Table 5, subject to a tolerance of ±3%. The tolerance on time to crest should normally be ±30%. For convenience in measurement, the time to crest may be considered as 1.67 times the time interval measured on the front of the wave from 30% to 90% of the crest value. The tolerance on time to one-half of crest shall normally be ±20%. However, as a practical matter,

a) The time to crest shall not exceed 2.5 μs except for windings of large impulse capacitance (low-voltage, high kVA and some high-voltage, high kVA windings).
   To demonstrate that the large capacitance of the winding causes the long front, the impulse generator series resistance may be reduced, which should cause superimposed oscillations. Only the inherent generator and lead inductances should be in the circuit.
b) The impedance of some windings may be so low that the desired time to the 50% voltage point on the tail of the wave cannot be obtained with available equipment. In such cases, the manufacturer should advise the purchaser at proposal stage of the wave shape limitation. Based on agreement, waves of shorter duration are acceptable.

Copyright © 1997 IEEE All Rights Reserved

--`,,`-`-`,,`,,`,`,,`---
Copyright The Institute of Electrical and Electronics Engineers, Inc.
Provided by IHS under license with IEEE
No reproduction or networking permitted without license from IHS Not for Resale

The virtual time zero can be determined by locating points on the front of the wave at which the voltage is, respectively, 30% and 90% of the crest value and then drawing a straight line through these points. The intersection of this line with the time axis (zero-voltage line) is the virtual time zero.

If there are oscillations on the front of the waves, the 30% and 90% points shall be determined from the average, smooth wave front sketched in through the oscillations. The magnitude of the oscillations preferably should not exceed 10% of the applied voltage.

When there are high-frequency oscillations on the crest of the wave, the crest value shall be determined from a smooth wave sketched through the oscillations. If the period of these oscillations is 2 μs or more, the actual crest value shall be used.

11.3.6.2 Reduced full-wave test

This wave is the same as a full wave except that the crest value shall be between 50% and 70% of the full-wave value given in Table 5.

11.3.6.3 Chopped-Wave test

When specified, this wave shall be the same as a full wave except that the crest value shall be at the required higher level given in Table 5 and the voltage wave shall be chopped at or after the required minimum time to sparkover. In general, the gap or other equivalent chopping device shall be located as close as possible to the terminals and the impedance shall be limited to that of the necessary leads to the gap; however, it shall be permissible for the manufacturer to add resistance to limit the amount of overswing to the opposite polarity to 50% of the amplitude of the chopped wave. The value of resistance added should not increase the time to chop of the chopped wave.

11.3.6.4 Wave polarity

For dry-type series reactors, the test wave shall be positive polarity unless otherwise specified.

11.3.6.5 Wave-Shape control

The maximum half value time t_2 of an impulse wave tail can be derived from the resonance frequency of the impulse generator capacitance (C_g) with the test object reactance (L_t).

$$t_2 = \frac{\pi}{3}\sqrt{L_t C_8} \tag{12}$$

This is a theoretical value applying to an undamped oscillation with an opposite polarity peak of 100%. Various amounts of circuit damping will reduce this value accordingly. For instance, with a limitation of 50% for the opposite polarity peak, t_2 is

$$t_2 \approx \sqrt{0.5 L_t C_8} \tag{13}$$

Equations (12) and (13) are based on the standard impulse test circuit. Values of $t_2 < 50$ μs are typical for low-inductance reactors. Values of t_2 close to or exceeding those calculated using equations (12) and (13) can be achieved with the use of an inductor in parallel with the series (front) resistor of the impulse circuit with compromises generally required between wave duration, opposite polarity peak, wave front time, and peak overshoot.

The manufacturer may also elect to test a low-impedance winding by inserting a resistor of not more than 500 Ω in the grounded end of the winding. Although this will improve the impulse wave shape, the largest portion of the test voltage will be across the resistor and not across the test coil windings. Therefore, a shorter impulse wave tail is preferable to the insertion of a series resistor between the test object and ground.

 Copyright © 1997 IEEE All Rights Reserved

Copyright The Institute of Electrical and Electronics Engineers, Inc.
Provided by IHS under license with IEEE
No reproduction or networking permitted without license from IHS Not for Resale

More information on the testing of low impedance windings can be found in IEC 722-1982 , Appendix A, Principles of Wave Shape Control, pp. 39–47.

11.3.6.6 Impulse oscillograms

All impulses applied to a reactor shall be recorded by a cathode-ray oscillograph or by suitable digital transient recorder. These oscillograms shall include voltage and ground-current oscillograms for *all* full-wave and reduced full-wave impulses. Sweep times should be on the order of 2 μs to 5 μs for chopped-wave tests, 50 μs to 100 μs for full-wave tests, and 100 μs to 600 μs for ground-current measurements.

All voltage and current oscillograms should be included in the test report, including all relevant calibration shots.

11.3.7 Connections for impulse tests

In general, the tests shall be applied to each terminal one at a time.

11.3.7.1 Terminals not being tested

One terminal of the winding under test shall be grounded through a low-resistance shunt so that ground current measurements can be made. The resistance of the current shunt should typically be less than 0.1% of the reactance of the test object (reactor) at 5 kHz. The 5 kHz reference frequency is based on the half period of a standard lightning impulse being on the order of 100 μs.

11.3.8 Detection of failure during impulse test

Because of the nature of impulse test failures, one of the most important matters is the detection of such failures. There are a number of indications of insulation failure.

11.3.8.1 Ground current oscillograms

In this method of failure detection, the impulse current in the grounded end of the winding tested is measured by means of a cathode-ray oscillograph or by suitable digital transient recorder connected across a suitable shunt inserted between the grounded end of the winding and ground. Any differences in the wave shape between the reduced full wave and final full wave detected by comparison of the two current oscillograms may be indications of failure or deviations due to noninjurious causes. A complete investigation is required and should include an evaluation by means of a new reduced-wave and full-wave test. Examples of probable causes of different wave shapes are operation of protective devices or conditions in the test circuit external to the series reactor.

The ground current method of detection is not suitable for use with chopped-wave tests.

It is difficult to shield the measuring circuit completely from the influence of the high voltage of the surge generator, and some stray potentials are frequently picked up that may produce an erratic record for the first 1 μs or 2 μs. Such influences, if they occur at the start of the current wave (and, to a lesser extent, at the start of the voltage wave), should be disregarded.

Where the impedance of the series reactor tested is high with respect to its series capacitance, current measurements may be difficult to make because of the small impulse current. In order to reduce the initial large capacitance current and maintain a reasonable amplitude for the remainder of the wave, a capacitor may be included in the current-measuring circuit. The capacitor should not be larger than required to achieve this result.

11.3.8.2 Voltage oscillograms

Any unexplained differences between the reduced full wave and final full wave detected by comparison of the two voltage oscillograms, or any such differences observed by comparing the chopped waves to each other and to the full

Copyright © 1997 IEEE All Rights Reserved

--`,,`-`-`,,`,,`,`,,`---

Copyright The Institute of Electrical and Electronics Engineers, Inc.
Provided by IHS under license with IEEE
No reproduction or networking permitted without license from IHS Not for Resale

wave up to the time of flashover, are indications of failure. Deviations may be caused by conditions in the test circuit external to the series reactor and should be fully investigated and confirmed by a new reduced-wave and full-wave test.

Other techniques that can be employed to investigate a suspected problem during the impulse test are the application of additional reduced waves and the subsequent comparison of these oscillograms with the original, the application of a series of full-wave impulses and an examination of the oscillograms for evidence of progressive change and, if a digitally based test system is being employed, the transfer function can be utilized.

11.3.8.3 Other methods of failure detection

Other methods of failure detection include the following:

a) *Failure of gap to flashover*. In making the chopped-wave test, failure of the chopping gap, or any external part to flashover, although the voltage oscillogram shows a chopped wave, is a definite indication of a failure either within the series reactor or in the test circuit, or the gap is too wide.
b) *Noise*. Unusual noise within the series reactor at the instant of applying the impulse is an indication of trouble. The cause of such noise should be investigated.

11.3.9 Switching impulse test procedures

The switching impulse test, when specified, shall consist of applying a switching impulse wave across the complete reactor support structure, including insulators, with a crest value equal to the specified test level. Since this is a test on the support structure, the reactor terminals should be “shorted” during the performance of the test. Consideration can be given to performing this test under wet conditions. However, due to the very large geometries involved, the impulse test is performed while wetting a section of the reactor and at least one insulator column. Accurate results will be obtained since all insulator columns are identical in terms of geometry. The test shall be carried out in accordance with IEEE Std 4-1995.

11.3.9.1 Number of tests

The switching impulse test consists of applying to the top of the support structure with the bottom end grounded, one reduced voltage wave and 15 full voltage waves. The reduced-voltage wave shall have a crest value of 50% to 70% of the full-voltage wave value given in Table 5. The full-voltage wave shall have a minimum crest value in accordance with Table 5. The requirements of the test are satisfied if not more than two disruptive discharges occur.

11.3.9.2 Switching impulse waves

11.3.9.2.1 Polarity

For dry-type high-voltage series reactors, rated 115 kV and over, the test wave is normally of positive polarity.

11.3.9.2.2 Wave shape

The switching impulse voltage wave shall have a crest value in accordance with the assigned insulation level, subject to a tolerance of ±3%. The nominal time to crest shall be 250 μs ±20% and the time to half value of 2500 μs ±60%.

11.3.9.2.3 Time to crest

The actual time to crest shall be defined as the time interval from the start of the impulse wave to the time when the maximum amplitude is reached.

11.3.9.2.4 Time to half-voltage values

See IEEE Std 4-1995.

Copyright © 1997 IEEE All Rights Reserved

Copyright The Institute of Electrical and Electronics Engineers, Inc.
Provided by IHS under license with IEEE
No reproduction or networking permitted without license from IHS Not for Resale

11.3.9.2.5 Failure detection

A voltage oscillogram shall be taken of each impulse wave. The test is considered successful if there is no collapse of voltage indicated on the oscillograms.

11.3.9.2.6 Suggested methods of generating switching impulse waves

An applied voltage wave of proper magnitude and duration may be obtained by discharging an impulse generator or other capacitor bank across the support structure (including insulators) under test. External circuit parameters may be used for controlling the wave shape.

11.4 Losses and impedance

11.4.1 General impedance test

The impedance voltage comprises an effective resistance component corresponding to the impedance losses, and a reactance component corresponding to the flux linkages of the winding.

11.4.1.1 Separation by calculation

It is not practical to measure these components separately, but after the total impedance loss and impedance voltage are measured, the components may be separated by calculation.

11.4.1.2 Resistance and reactance component determination

Resistance and reactance components of the impedance voltage are determined by the use of the following equations:

$$E_r = \frac{P_z}{I} \tag{14}$$

$$E_x = \sqrt{E_z^{\,2} - E_r^{\,2}} \tag{15}$$

where

E_r is the resistance voltage, in phase component,
E_x is the reactance voltage, quadrature component,
E_z is the impedance voltage of winding carrying current,
P_z is the watts measured in impedance test of winding carrying current, and
I is the current in amperes in winding on which voltage is impressed.

11.4.2 Temperature correction for losses

The I^2R component of the impedance loss increases with the temperature, the stray-loss component diminishes with the temperature, and therefore, when it is desired to convert the impedance losses from one temperature to another, the two components of the impedance loss are converted separately. Thus,

$$P_r = P'_r \frac{T_k + \theta}{T_k + \theta'} \tag{16}$$

$$P_s = P'_s \frac{T_k + \theta'}{T_k + \theta} \tag{17}$$

Copyright © 1997 IEEE All Rights Reserved

Copyright The Institute of Electrical and Electronics Engineers, Inc.
Provided by IHS under license with IEEE
No reproduction or networking permitted without license from IHS Not for Resale

where

T_k is 234.5 for copper, and
T_k is 225 for aluminum.

P_r and P_s are I^2R and stray losses, respectively, at the specified temperature θ. P'_r and P'_s are measured I^2R and stray losses at temperature θ′. θ and θ′ are in degrees Celsius.

NOTE — The manufacturer shall use the appropriate value of T_k for the specified conductor material used and shall advise the user accordingly.

11.4.2.1 Reference temperature for losses and impedance

The typical reference temperature for series reactors to which losses and impedances are corrected shall be 75°C.

NOTE — In the case of loss evaluated reactors, consideration may be given to the use of a reference temperature for loss calculations to be the average winding rise, as determined by a temperature rise test, plus 20°C.

11.4.3 Loss measurements

11.4.3.1 General

Since many series reactors (especially high kilovoltampere units) operate at low power factors, small variations in frequency, deviations from the true sine wave in applied voltage, errors in measuring components, and electromagnetic interference may introduce significant errors in loss measurements. Proper test conditions and precision components specifically designed for low power factor measurements, are essential for an accurate determination of reactor losses.

a) Impedance bridges are frequently used to measure losses and are generally more accurate than traditional wattmeter measurements. While many configurations of impedance bridge networks are possible, the choice of a particular network shall be determined by the measurement problem at hand and the testing facilities available.[8] It should be noted that modern electronic-based wattmeters can be highly accurate.
b) If wattmeters are used to measure losses, connections to the reactor will be the same as those shown in Figures 3 and 4. The voltage is adjusted to the desired value at rated frequency, and simultaneous readings of amperes, volts, watts, and frequency are taken. For low power factors, corrections shall be considered for phase angle and losses in the instruments and instrument transformers.

11.4.3.2 Loss tests on dry-type series reactors

In these reactors, the losses consist of the I^2R (dc resistance) losses in the conductor, the eddy losses in the conductor, and any metallic framework of the clamping structure.

Since the losses in these reactors are proportional to I^2, the losses can be measured at 100% voltage, or at a reduced voltage. In either case, precision of measurement shall be demonstrated to the purchaser's satisfaction. The losses are to be corrected to rated current and a reference temperature. In some cases, the actual average winding rise as determined by the temperature rise test plus 20 °C may be used, which is an attempt to reflect actual in-service losses and actual site average ambient temperature.

[8]See Annex E, [B4] and [B7] through [B12] .

Copyright © 1997 IEEE All Rights Reserved

Copyright The Institute of Electrical and Electronics Engineers, Inc.
Provided by IHS under license with IEEE
No reproduction or networking permitted without license from IHS Not for Resale

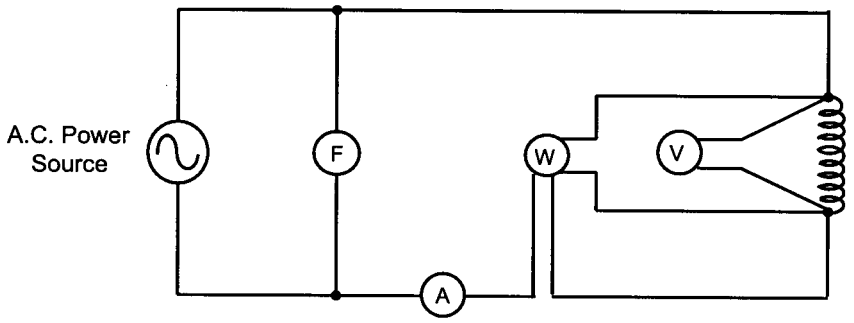

Figure 3—Single-Phase reactor connections for impedance-loss and impedance-voltage tests (Instrument transformers to be added when necessary)

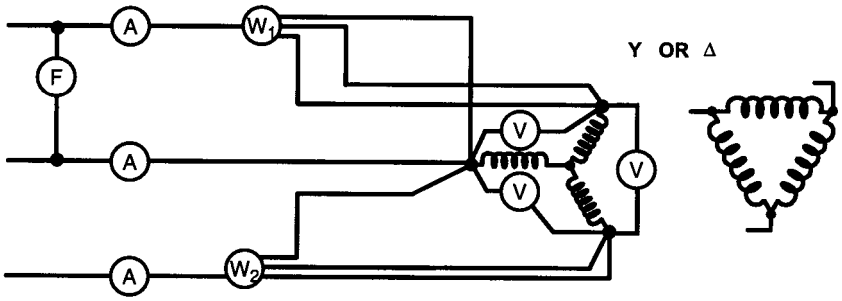

Figure 4—Three-Phase reactor connections for impedance-loss and impedance-voltage tests (Instrument transformers to be added when necessary)

11.4.3.2.1 Temperature of the winding

The temperature of the winding shall be taken immediately before and after the impedance measurements in a manner similar to that described in 11.2. The average shall be taken as the true temperature.

11.4.3.2.2 I^2R loss of the winding

The I^2R loss of the winding is calculated from the ohmic resistance measurements (corrected to the temperature at which the impedance test was made) and the currents that were used in the impedance measurement. These I^2R losses subtracted from the impedance watts give the stray losses of the winding. When reactor windings are enclosed in shielded housings or tanks, part or all of which are magnetic material, part of the stray loss must be considered with the winding I^2R when correcting losses from measured temperature to other temperatures. Since this varies with the proportions of the reactor design and type of shield, it will have to be approximated for each design but can be checked by measurement of loss at the start and finish of the temperature run.

11.4.3.2.3 Per-Unit values

Per-Unit values of the resistance, reactance, and impedance voltage are obtained by dividing E_r, E_x, and E_z in 11.4.1.2 by the rated voltage. Percentage values are obtained by multiplying per-unit values by 100.

Copyright © 1997 IEEE All Rights Reserved

Copyright The Institute of Electrical and Electronics Engineers, Inc.
Provided by IHS under license with IEEE
No reproduction or networking permitted without license from IHS Not for Resale

11.4.4 Impedance-Loss and impedance-voltage test of a three-phase reactor

Balanced three-phase voltages of rated frequency and suitable magnitude are applied to the terminals to force rated current to circulate (see Figure 4).

11.4.4.1 Procedure

The procedure is similar to that described for single-phase units, except that all connection and measurements are three phase instead of single phase.

11.4.4.2 Line currents

If the three line currents cannot be balanced, their average rms values should correspond to the desired value.

11.4.4.3 Stray-Loss component

The stray-loss component of the impedance watts is obtained by subtracting from the latter the I^2R losses of the reactor.

11.4.4.4 Temperature correction

Temperature correction shall be made as in 11.4.2.

11.4.5 Bridge method

Bridge methods are preferred as they are generally more accurate than the wattmeter method. However, it should be noted that modern electronic-based wattmeters can be highly accurate.

11.5 Temperature rise tests

11.5.1 Loading for temperature rise tests

The reactor shall be tested under loading conditions that will produce losses as close as possible to those obtained at rated frequency with rated current in the windings. If laboratory power is not sufficient or power control adjustment is not fine enough to carry out a test at rated current, testing at current levels down to 90% of rated is permissible. The measured temperature rise shall be corrected using the method in 11.5.6.

In the case of reactors to be installed in a side-by-side configuration, testing of a single unit is representative. In the case of reactors mounted in a three-phase stack configuration, they should be tested in the installed configuration with a three-phase current supply unless otherwise agreed upon between purchaser and manufacturer.

11.5.2 Temperature rise tests—General

All temperature rise tests shall be made under normal conditions of the means, or method, of cooling.

11.5.2.1 Reactor configuration

Reactors shall be completely assembled.

11.5.2.2 Ambient temperature

The ambient temperature shall be taken as that of the surrounding air, which should be preferably not less than 10 °C nor more than 40 °C. However, in recognition that it may be impractical to maintain the ambient temperature of large

Copyright © 1997 IEEE All Rights Reserved

Copyright The Institute of Electrical and Electronics Engineers, Inc.
Provided by IHS under license with IEEE
No reproduction or networking permitted without license from IHS Not for Resale

test laboratories within this range, temperature tests may be made with ambient temperatures outside the range specified if suitable correction factors are employed.

11.5.2.3 Ambient temperature determination

The temperature of the surrounding air (ambient temperature) shall be determined by at least three thermocouples, or thermometers, spaced uniformly around the reactor under test. They should be located at about one-half the height of the reactor, and at a distance of 1 to 2 m from the reactor. They should be protected from drafts and abnormal heating.

11.5.2.4 Minimization of errors

To reduce to a minimum the errors due to time lag between the temperature of the reactors and the variations in the ambient temperature, the thermocouples, or thermometers, shall be placed in suitable containers that shall have such proportions as will require not less than 2 h for the indicated temperature within the container to change 6.3 °C if suddenly placed in air that has a temperature 10 °C higher, or lower, than the previous steady-state indicated temperature within the container.

11.5.2.5 Temperature rise of metal parts

The temperature rise of metal parts (other than the winding conductor) in contact with, or adjacent to insulation, and of other metal parts, shall be determined by thermocouple or by thermometer when required.

11.5.2.6 Temperature measuring devices

Thermocouples, thermometers, or temperature labels may be used to measure surface temperature. It should be noted that the use of thermocouples can be hazardous due to parts being at high voltage.

11.5.2.7 Use of initial overloads

It is permissible to shorten the time required for the test by the use of initial overloads, restricted cooling, or any other suitable method.

11.5.2.8 Temperature rise of the winding

The temperature rise of the winding shall be determined by the resistance method, or by thermometer when so specified.

11.5.2.9 Ultimate temperature rise

The ultimate temperature rise is considered to be reached when the temperature rise becomes constant, i.e., when temperatures measured by thermometers or thermocouples on the winding do not vary by more than 2.5% or 1 °C, whichever is greater, during a period of two consecutive hours and the duration of the heat run is at least five thermal time constants.

11.5.3 Determination of average measured winding temperatures by the hot-resistance method

11.5.3.1 Average winding temperature rise

The average measured temperature of the winding conductor may be determined by either of the following equations:

$$\theta = \frac{R}{R_o}(T_k + \theta_o) - T_k \qquad (18)$$

Copyright © 1997 IEEE All Rights Reserved

--`,,`-`-`,,`,,`,`,,`---

Copyright The Institute of Electrical and Electronics Engineers, Inc.
Provided by IHS under license with IEEE
No reproduction or networking permitted without license from IHS Not for Resale

$$\theta = \frac{R - R_o}{R_o}(T_k + \theta_o) + \theta_O \quad (19)$$

where

T_k is 234.5 for copper,
T_k is 225 for aluminum,
θ is the temperature in degrees Celsius corresponding to hot resistance R,
θ_o is the temperature in degrees Celsius corresponding to cold resistance R_o,
R is the hot resistance; record the elapsed time between the instant of shutdown and each hot-resistance measurement, and
R_o is the cold resistance determined in accordance with the rules in this standard.

NOTE — The manufacturer shall use the appropriate value of T_k for the specified conductor material used and shall advise the purchaser accordingly.

11.5.3.2 Correction back to shutdown, cooling curve method

11.5.3.2.1 Number of readings

Take a series of at least four, preferably more, readings on the reactor winding under test, and record the time after shutdown for each reading.

11.5.3.2.2 Overall reading time

The overall reading time should exceed 4 min and may extend considerably beyond.

11.5.3.2.3 Time spacing of readings

The readings should be time-spaced to assure accurate extrapolation back to shutdown.

11.5.3.2.4 First reading

The first reading on each winding should be taken as quickly as possible after shutdown, but not before the measuring current has become stable, and must be taken within 4 min. (See 11.5.)

11.5.3.2.5 Extrapolation to instant of shutdown

Plot the resistance time data on suitable coordinate paper, and extrapolate the curve back to the instant of shutdown.

11.5.3.2.6 Resistance at the instant of shutdown

The resistance value so obtained shall be used to calculate the average winding temperature at the instant of shutdown.

11.5.3.2.7 Multiple reactor units

If necessary, the temperature test may be resumed so that the first readings on any reactor winding may be completed within the required 4 min. This is applicable when multiple reactor units (three-phase stacks) are under test.

11.5.4 Hot spot measurement

Modern dry-type air-core series reactors usually employ fully encapsulated windings. Therefore, direct access to the winding is not possible for the measurement of hot spot temperatures during the *heat-run* test. However, it is possible to measure winding surface temperature with some degree of accuracy. Such winding surface temperature

Copyright © 1997 IEEE All Rights Reserved

Copyright The Institute of Electrical and Electronics Engineers, Inc.
Provided by IHS under license with IEEE
No reproduction or networking permitted without license from IHS Not for Resale

measurements are essentially a measurement of winding hot spot due to the fact that the winding encapsulation medium is thin compared to the winding conductor cross section.

Winding hot spot can be measured using thermometers, thermocouples, or fiber-optic probes. In all cases the method for fixing of the temperature measuring device to the surface of the winding is extremely critical. Silicone rubber sealant compound or similarly based adhesive systems offer the best performance due to their bonding capabilities at high temperatures and thermal insulating properties. The latter characteristic ensures winding surface temperature is measured and not cooling duct air temperature. The amount of silicone rubber sealant used is important. Sufficient material should be employed to bond the thermometer bulb to the surface in such a manner that the bulb registers only surface temperature and not air temperature. The same holds true for thermocouples or fiber-optic probes.

Another important criterion is to ensure that the measuring device or the bonding system does not impede or influence the flow of cooling air.

A hot spot measurement should be made for each encapsulated winding group in the reactor under test.

Hottest-Spot location and, hence, measurement point location, is typically in the last turns of the upper winding end. Exact location, and, hence, the temperature measuring device placement decision, can best be determined by the manufacturer due to his detailed knowledge of the product.

11.5.5 Temperature rise test in three-phase stack configuration

In the case of heat runs performed on reactors in a three-phase stack configuration, the average winding temperature rise and hot spot winding temperature rises should be obtained for each individual phase reactor. Typically, the top coil in a three-phase stack will have the highest temperature values due to the influence of the reactors in the bottom two phases.

11.5.6 Winding temperature-rise correction for reduced current

When the input test current I_t is below the rated value of current I_r, but not less than 90% of I_r, the temperature rise $\Delta\theta_t$ of the windings, shall be measured by the resistance method when steady-state conditions have been reached, and corrected to rated load conditions $\Delta\theta_r$ by the formula

$$\Delta\theta_r = \Delta\theta_t\left[\frac{I_r}{I_t}\right]^2 \tag{20}$$

where

I_r is the rated current,
I_t is the test current,
$\Delta\theta_r$ is the average temperature rise at rated current, and
$\Delta\theta_t$ is the average temperature rise at test current.

NOTE — The exponent of 2 used in the above calculation is conservative and is an upper bound. Typical values will range from 1.6 to 2.0. If the manufacturer uses an exponent of 2 to convert from a lower current to a higher current, then only one temperature rise test is required. If a manufacturer wishes to use an exponent lower than 2, then two temperature rise tests must be performed to verify the actual exponent value. The determination of the exponent n from the test data is carried out as follows:

$$\Delta\theta_{t2} = \Delta\theta_{t1}\left(\frac{I_2}{I_1}\right)^n$$

$$\frac{\Delta\theta_{t2}}{\Delta\theta_{t1}} = \left(\frac{I_2}{I_1}\right)^n$$

Copyright © 1997 IEEE All Rights Reserved

Copyright The Institute of Electrical and Electronics Engineers, Inc.
Provided by IHS under license with IEEE
No reproduction or networking permitted without license from IHS
Not for Resale

$$\ln\left(\frac{\Delta\theta_{t2}}{\Delta\theta_{t1}}\right) = n \ln\left(\frac{I_2}{I_1}\right)$$

therefore,

$$n = \frac{\ln\left(\frac{\Delta\theta_{t2}}{\Delta\theta_{t1}}\right)}{\ln\left(\frac{I_2}{I_1}\right)}$$

11.5.7 Induction times

The induction time for the measuring current to become stable should be noted during the cold-resistance measurements in order to assure that sufficient time elapses for the induction effect to disappear before hot resistance readings are taken.

11.5.8 Correction of observed temperature rise for variation in altitude

11.5.8.1 Altitude not exceeding 1000 m

When tests are made at an altitude not exceeding 1000 m (3300 ft) above sea level, no altitude correction shall be applied to the temperature rise.

11.5.8.2 Reactors operating at an altitude in excess of 1000 m

When a reactor that is tested at an altitude less than 1000 m (3300 ft) is to be operated at an altitude in excess of 1000 m, it shall be assumed that the observed temperature rise will increase in accordance with the following relation:

$$\text{Increase in temperature rise at altitude } A \text{ m (ft)} = \text{observed rise} \cdot \left(\frac{A}{A_o} - 1\right)F \quad (21)$$

where

A_0 is 1000 m (3300 ft), and
F is an empirical factor equal to 0.05.

NOTE — The “observed rise” in the foregoing equation is winding rise over the ambient temperature.

11.5.9 Correction of observed temperature rise for ambient temperature

11.5.9.1 Ambient air temperature other than 30 °C

When the ambient air temperature is other than 30 °C, a correction shall be applied to the temperature rise of the winding by multiplying it by the correction factor C, which is given by the ratio

$$C = \frac{T_k + 30}{T_k + \theta} \quad (22)$$

where

T_k is 234.5 for copper,
T_k is 225 for aluminum, and
θ is the ambient air temperature, in degrees Celsius.

Copyright © 1997 IEEE All Rights Reserved

Copyright The Institute of Electrical and Electronics Engineers, Inc.
Provided by IHS under license with IEEE
No reproduction or networking permitted without license from IHS Not for Resale

The manufacturer shall use the appropriate value of T_k for the specified conductor material used and shall advise the user accordingly.

11.6 Short-Circuit test

11.6.1 Rationale for the short-circuit test

A short-circuit test is performed to demonstrate the ability of the dry-type air-core series reactor under test to withstand worst-case system fault scenarios. A system fault is typically composed of a full offset peak current portion and a longer duration symmetrical current portion. In most cases the offset decays to zero in under ten cycles. The high offset peak currents during the initial portion of the fault impose the highest mechanical stresses on the reactor, while the longer duration symmetrical fault current subjects the reactor to high temperatures and significant mechanical loads simultaneously.

Other system operational factors that should be taken into consideration in the specification of the short-circuit test are the number of breaker autoreclosures during a fault and the time that a fault current is allowed to flow before it is interrupted. The number of autoreclosures allowed should influence the number of mechanical peak shots performed during the mechanical short-circuit test, e.g., 1, 2, or 3. The number of cycles in each shot of the mechanical short-circuit test should reflect the utility's interrupting practice. The duration selected (typically 1, 2, or 3 s) should reflect the cumulative thermal effects of the utility's autoreclosure philosophy and the time a fault is allowed to exist before it is interrupted.

11.6.2 Basic principles of short-circuit testing

A reactor(s) may be short-circuit tested in a number of configurations. The single-phase short-circuit test may be performed on one unit or a three-phase short-circuit test may be performed on a three-phase in-line, three-phase triangular, or three-phase stacked configuration. Three-Phase reactor configurations are tested with three-phase short-circuit currents applied to the input terminals and with the output terminals connected together.

It is preferable to test the reactor(s) in a test setup that represents the installed condition as closely as possible. In this case it is important to ensure that the test is performed with components and configurations exactly as installed. Interactive forces generated by the reactor's field and current feeds (bus, cable, etc.) are an important aspect of design and any deviation in configuration or in components utilized for the test should be fully assessed.

In most cases the reactor will not be able to be tested as installed. In these situations it is paramount to ensure that interaction force effects created by the field of the reactor and the supply circuit current are minimized. To this end the circuit setup illustrated in Figure 5 is typical of a desirable situation where interactive effects between the reactor and laboratory bus bar layout are minimized.

The objective of the short-circuit test is to demonstrate the ability of the reactor and its auxiliary components to withstand the mechanical stresses generated by internal electromagnetic forces. All forces on reactor components are the result of the interactive effects of the currents flowing in them (windings, input terminal arms) and the global magnetic field of the reactor. Forces transmitted to the reactor under test as a result of poorly restrained bus, inadequate fixing of the reactor to the test bay floor, etc., are not representative of field-installed conditions. Therefore, test setup is extremely critical to ensure realistic results.

11.6.3 Guidelines for short-circuit testing

a) Reactors should be assembled for test as closely as possible to actual service conditions. If the reactor manufacturer has included buswork or any additional parts important to the operation of the reactor, they shall be attached for the test.
   It is acceptable to test
   1) One coil of a three-phase side-by-side mounting configuration,

Copyright © 1997 IEEE All Rights Reserved

Copyright The Institute of Electrical and Electronics Engineers, Inc.
Provided by IHS under license with IEEE
No reproduction or networking permitted without license from IHS Not for Resale

2) Two coils of a two-coil stack configuration, or
3) A three-phase stack in a three-phase configuration.

b) A minimum test current sequence consisting of one fully offset first peak and a total duration of 10 cycles shall be performed per phase.
c) If the coil is installed in a circuit with a recloser, then three fully offset shots shall be performed.
d) The thermal test, if required and not verified by calculation, shall consist of one rms symmetrical current shot for rated duration (usually 3 s) or of duration up to 6 s to give the same I^2t, if rated thermal short-circuit current magnitude cannot be achieved.
e) The end user and the reactor manufacturer should agree on the test sequence before test.

11.6.4 Acceptance criteria

Routine tests, including measurement of inductance and losses and the performance of a turn-to-turn or impulse dielectric test, at 100% of specified voltage, should be carried out on the reactor(s) before and after the short-circuit type test. Inductance and loss values should be consistent within measurement tolerance limits. Oscillograms from the required dielectric test should show no change, agreeing with the limits of the high-voltage dielectric test systems.

Visual inspection of the reactor and supporting structure shall give no indication that there has been any change in mechanical condition that will impair the function of the reactor. Depending on the type of construction employed in the reactor, the areas of mechanical criticality will vary. In the case of open style reactors, focus should be on the winding-clamping system. For fully encapsulated reactors, the encapsulation should be carefully inspected for surface cracks before and after the short-circuit tests. Coating cracks at discontinuities such as at the winding-clamping system interface, etc., are not usually indications of a mechanical problem but are typically due to the inelastic nature of most paints and other coating materials. If, after the short-circuit test program, in the case of an open style reactor, the winding-clamping system has deteriorated or, in the case of an encapsulated reactor, the surface cracks have increased in number or dimension, the reactor is considered to have failed the short-circuit test. In case of doubt, up to three more short-circuit tests with fully offset current shall be applied to verify that the monitored condition has stabilized. If the deterioration continues, the reactor is considered to have failed the test. If conditions stabilize after one or two extra short-circuit tests and coupled with successful routine tests after short-circuit tests, the reactor shall be considered to have passed the short-circuit test.

Copyright © 1997 IEEE All Rights Reserved

Copyright The Institute of Electrical and Electronics Engineers, Inc.
Provided by IHS under license with IEEE
No reproduction or networking permitted without license from IHS Not for Resale

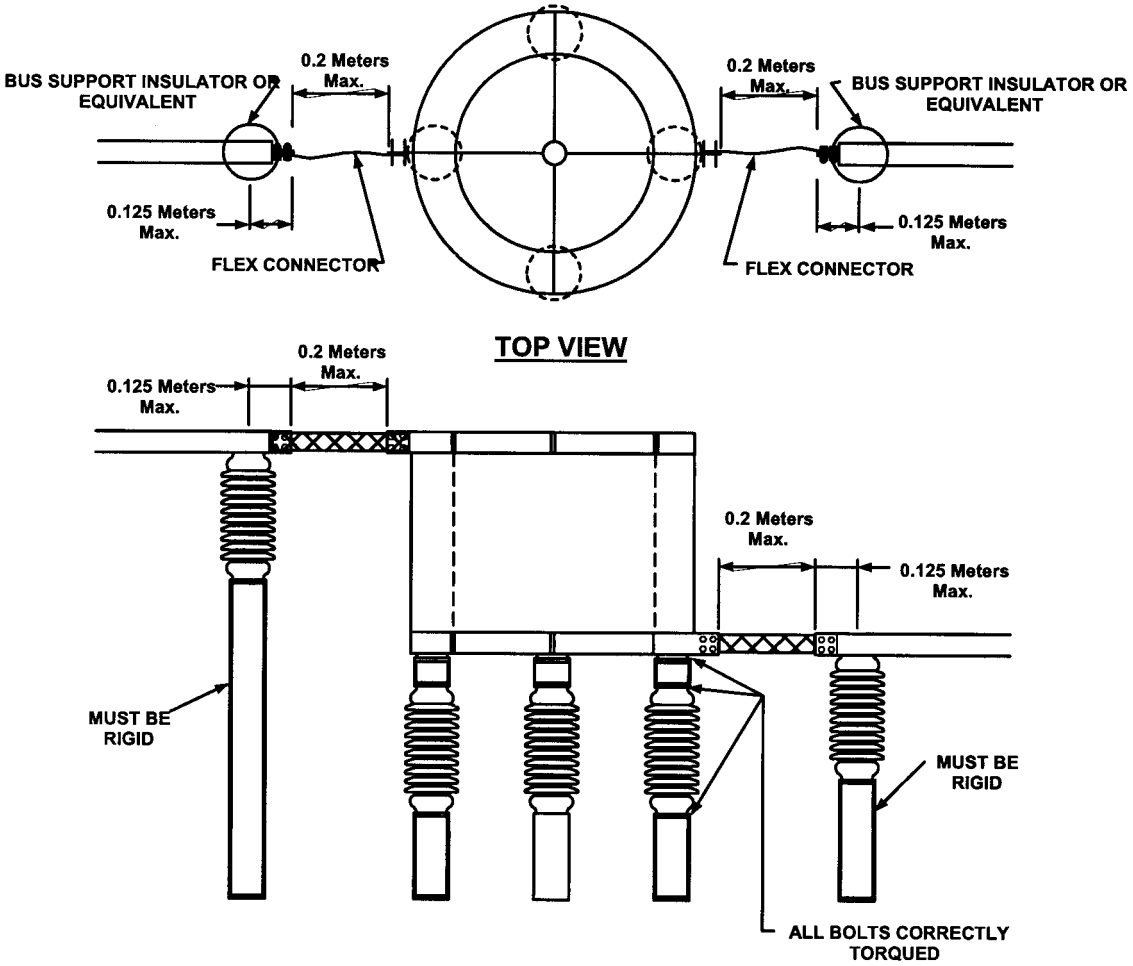

NOTES:

1 — All base brackets shall be bolted to floor.

2 — All bolts shall be torqued to correct value.

3 — Incoming/outgoing bus connection to reactor shall be by flex connector with a length of 0.2 m maximum. It is intended that the connector not become taut.

4 — Incoming/outgoing bus shall be rigidly supported at flex connector.

5 — Other variations on the test set-up illustrated are acceptable providing the intent is met. Final test setup should be fully agreed to by the manufacturer, the end user, and the test facility, or equivalent.

Figure 5—Guideline for bus connection and arrangement for short-circuit testing

Copyright © 1997 IEEE All Rights Reserved

Copyright The Institute of Electrical and Electronics Engineers, Inc.
Provided by IHS under license with IEEE
No reproduction or networking permitted without license from IHS
Not for Resale

11.7 Short-Time current

11.7.1 Thermal short-time current capability calculations for series (current-limiting) reactors

11.7.1.1 Increase in winding temperature

The increase in winding temperature $\Delta\theta_t$ during short-circuit conditions shall be estimated on the basis of all heat stored in the conductor material and its associated turns insulation.

11.7.1.2 Thermal capacitance

The thermal capacitance of the conductor material shall be taken as the average of the values at the starting and finishing temperatures.

11.7.1.3 Units

All temperatures are in degrees Celsius.

11.7.1.4 Appropriate calculations of increase in winding temperature

The increase in winding temperature, $\Delta\theta_t$ that will occur during a specified short-time t shall be calculated by the following equation:

$$\Delta\theta_t = (T_k + \theta_s)F = (T_k + \theta_s)[(1 + e_s)m + 0.6m^2] \tag{23}$$

where

$$F = [(1 + e_s)m + 0.6m^2]$$
$$m = at \tag{24}$$
$$a = \frac{P_s}{C_a}\frac{1}{T_k + \theta_s} = \frac{P_r}{C_a(T_k + 75)}$$

where

t is the time, in seconds,
T_k is 234.5 for copper,
T_k is 225 for aluminum,
$\Delta\theta_t$ is the increase in winding temperature during time t (not to be greater than the difference between starting temperature θ_s and limiting temperature during short-circuit conditions given in Table 8),
θ_s is the starting temperature, and is equal to the reference ambient temperature (30 °C) plus steady-state hottest-spot temperature rise above reference ambient temperature at continuous current rating, using

a) measured hottest-spot temperature rise, if tested.
b) standard hottest-spot limiting temperature rise, if not temperature rise tested.

P_s is the short-circuit resistance loss at the starting temperature, θ_s, watts per kilogram of conductor material,
P_r is the short-circuit resistance loss at 75 °C, watts per kilogram of conductor material,
e_s is the per-unit eddy current loss, based on resistance loss at the starting temperature, and is equal to

$$e_{75}\left(\frac{T_k + 75}{T_k + \theta_s}\right),$$

e_{75} is the per-unit eddy current loss, based on resistance loss at 75 °C, and
C_a is the average thermal capacitance in joules (watt-second) per degree Celsius, per kilogram of conductor material, and its associated turns insulation, over the range of increase in winding temperature.

Copyright © 1997 IEEE All Rights Reserved

Copyright The Institute of Electrical and Electronics Engineers, Inc.
Provided by IHS under license with IEEE
No reproduction or networking permitted without license from IHS Not for Resale

The manufacturer shall use the appropriate value of T_k for the specified conductor material used and shall advise the purchaser accordingly.

11.7.1.5 Thermal capacitance estimation

The thermal capacitance C_x at any temperature θ_x below 500 °C may be closely estimated from the following empirical equations:

$$C_x = 383.6 + 0.0992\theta_x + 242.5\frac{A_i}{A_c} \text{ for copper} \quad (25)$$

$$C_x = 892.9 + 0.4409\theta_x + 793.7\frac{A_i}{A_c} \text{ for aluminum} \quad (26)$$

A_i is the cross-sectional area of insulation,
A_c is the cross-sectional area of conductor,
θ_x is the temperature in degrees Celsius, and
C_x is the thermal capacitance in joules per degree Celsius, per kilogram at temperature θ_x.

11.7.1.6 Exact calculation of increase in winding temperature

Equation (23) is an approximate formula and its use should be restricted to values of m = 0.6 and less.

The more exact equation is as follows:

$$\Delta\theta_t = (T_k + \theta_s)\left[\sqrt{\varepsilon^{2m} + e_s(\varepsilon^{2m} - 1)} - 1\right] \quad (27)$$

ε is equal to 2.7183, which is the base of the natural logarithms.

11.8 Audible sound-level test

11.8.1 General

The measurement of sound level on dry-type series reactors is an optional test. If such a test is to be performed, it should be carried out as far as applicable as described in IEEE Std C57.12.90-1993.

Audible sound from dry-type air-core reactors originates principally in the reactor winding from which it is radiated as airborne sound. The frequency spectrum of the audible sound for a 60 Hz power system consists primarily of a tone at 120 Hz.

The A-weighted measurement or sound-pressure level shall be used to determine the average sound level performance of a dry-type air-core series reactor. The procedures specified for measuring reactor sound-pressure levels are intended to be applicable to reactors being tested indoors or outdoors at the factory or to those that have been installed in the field.

11.8.2 Terminology

a) *Ambient sound-pressure level* is the sound-pressure level measured in the test facility without the reactor energized.
b) *Sound-Pressure level*, in decibels, is 20 times the logarithm to the base 10 of the ratio of the measured sound pressure to a reference pressure of 20 μPa.

Copyright © 1997 IEEE All Rights Reserved

Copyright The Institute of Electrical and Electronics Engineers, Inc.
Provided by IHS under license with IEEE
No reproduction or networking permitted without license from IHS Not for Resale

c) *Sound-Power level*, in decibels, is 10 times the logarithm to the base 10 of the ratio of the emitted sound power to a reference power of 10^{-12} W.
d) *Semireverberant facility* is a room with a solid floor and an undetermined amount of sound-absorbing materials on the walls and ceiling.

11.8.3 Instrumentation

Sound-Pressure level measurements shall be made with instrumentation that meets the requirements of ANSI S1.4-1983 for type 2 meters.

A suitable wind screen shall be used when the air velocity due to winds causes the readings to be in error.

Sound-Measuring instrumentation shall be calibrated before and after each measurement session. Further, it should be demonstrated prior to the measurement that the magnetic field of the reactor does not affect the rating of the sound-level meter. Should the calibration change by more than 1 dB due to the magnetic field, the measurements shall be declared invalid.

11.8.4 Test conditions

Measurements should be made in an environment having an ambient sound-pressure level at least 5 dB below the combined sound-pressure level. When the ambient sound-pressure level is 5 dB or more below the combined level of reactor and ambient, the corrections shown in Table 9 shall be applied to the combined reactor and ambient sound-pressure level to obtain the reactor sound-pressure level. When the difference between the reactor sound-pressure level and the ambient sound-pressure level is less than 5 dB, and it is only desired to know the sound-pressure level that the reactor does not exceed, a correction of -1.6 dB may be used.

Table 9—Correction to sound level

Difference between average sound level of combined series reactor and ambient and average sound level of ambient (dB)	Correction to be applied to average sound level of combined series reactor and ambient to obtain average sound level of series reactor (dB)
5	1.6
6	1.3
7	1.0
8	0.8
9	0.6
10	0.4
Over 10	0.0

When ambient sound conditions do not comply with the above, suitable corrections may be feasible when the ambient sound conditions are steady. For this condition, the details and method for making the measurements and the ambient corrections shall be agreed upon by those responsible for the design and application of the reactor.

The reactor shall be located so that no acoustically reflecting surface is within 3 m (10 ft) of the measuring microphone, other than the floor or ground. Should the reactor be tested within a semireverberant facility, it should be located in an asymmetrical manner with respect to the room geometry. If the specified conditions cannot be met, the

Copyright © 1997 IEEE All Rights Reserved

Copyright The Institute of Electrical and Electronics Engineers, Inc.
Provided by IHS under license with IEEE
No reproduction or networking permitted without license from IHS Not for Resale

measurement results may not be valid. When reactor sound emissions are measured in an enclosed space, sound reflections from walls or other large objects can influence the results because the sound is essentially a discrete tone that may be affected by room acoustics, room geometry, or reflecting objects. Thus, there may be differences in the sound measured in an indoor reactor or outdoor reactor installation.

The reactor shall be energized at rated current with rated frequency. If the reactor is designed with means for adjusting the impedance, it should be set for rated impedance.

Three-Phase series reactors shall be energized from a three-phase source and single-phase series reactors from a single-phase source. When available test power is insufficient for testing at rated current, then the manufacturer must demonstrate to the user's satisfaction that reduced-current testing produces sufficiently accurate results when extrapolated to the rated current level. If this cannot be demonstrated to the user, a field test can be performed.

Sound measurements shall begin after the reactor being tested is energized and steady-state sound level conditions are established. Measurements may be made immediately on reactors that have been in continuous operation.

When sound-level tests are made at the factory, the mounting conditions that are to be utilized at the final installation should be simulated as much as practicable.

11.8.5 Microphone positions

The reference sound-producing surface of a dry-type air-core reactor is its outside winding surface.

For single-phase reactors with a winding less than 2.4 m (8 ft) tall, microphone locations shall be at mid-height of the winding. For single-phase reactors greater than 2.4 m tall, microphone locations shall be at one-third and two-thirds of the winding height. For two- and three-coil stacked arrangements, microphone locations shall be at mid-height of each reactor winding. If measurements at the above heights are not possible due to bus bar layout, microphone locations shall be at the mid-height of the base reactor winding. In plan view, the microphone locations shall be laid out clockwise, sequentially along the circumference of a circle having its center at the geometric center of the reactor, and a radius equal to the reactor radius plus 3 m (10 ft). The first station will be on a radial line through the bottom terminal, or as close to it in the clockwise direction as is permitted to comply with minimum clearance distances to live parts.

For side-by-side arrangements of single or stacked reactors, microphone locations are determined by the same method as for a single coil or single stack, if the locations do not overlap. If the microphone locations do overlap, measurements shall only be taken around the outermost perimeter of the resulting contour (see Figure 6).

11.8.6 Sound-Level measurement

Sound-Pressure levels shall be measured in conformance with 11.8.1, 11.8.3, 11.8.4, and 11.8.5 using the sound-level-meter A-weighting characteristic.

Copyright © 1997 IEEE All Rights Reserved

Copyright The Institute of Electrical and Electronics Engineers, Inc.
Provided by IHS under license with IEEE
No reproduction or networking permitted without license from IHS Not for Resale

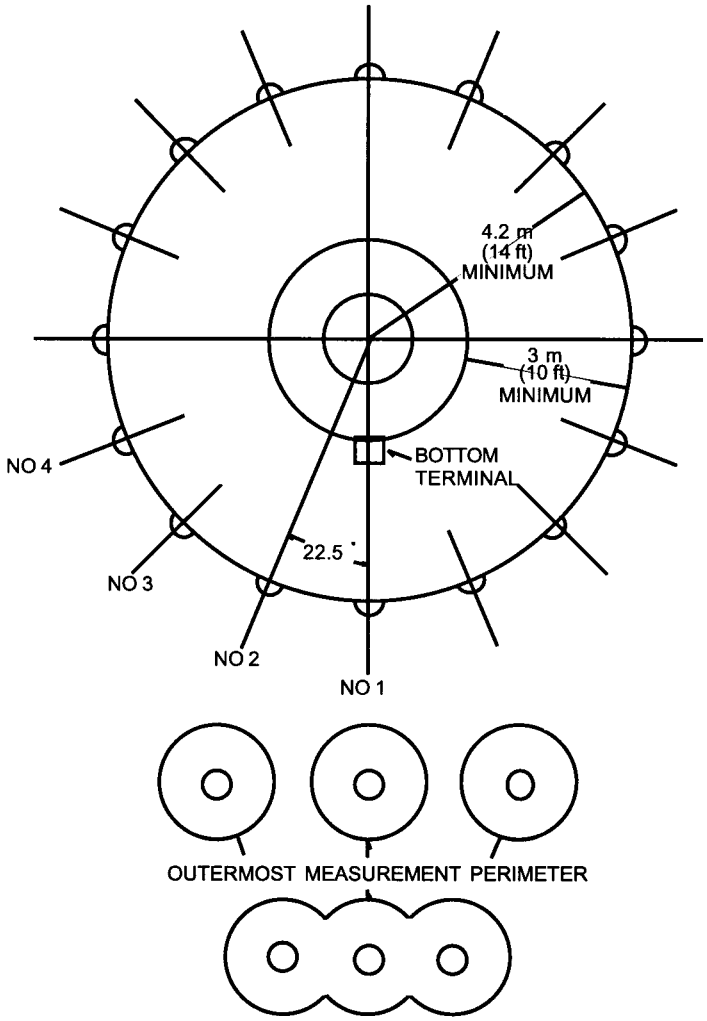

Figure 6—Microphone locations for audible sound tests

11.8.7 Calculation of average sound level

An average sound level value $\overline{L}_A$ shall be calculated from the measured values of the A-weighted sound level L_{Ai} by using the following equation:

$$\overline{L}_A = 10\log 10\left(\frac{1}{N}\sum_i 10^{0.1L_{Ai}}\right) \tag{28}$$

where

$\overline{L}_A$ is the average sound level in decibels,
L_{Ai} is the measured sound level at location i in decibels, and
N is the total number of measurement locations.

It should be noted that the above calculated value may have to be corrected for the following factors:

a) Ambient noise level

Copyright © 1997 IEEE All Rights Reserved

Copyright The Institute of Electrical and Electronics Engineers, Inc.
Provided by IHS under license with IEEE
No reproduction or networking permitted without license from IHS
Not for Resale

b) Acoustic characteristics of the location where sound readings are taken, e.g., reverberant properties of the test lab

11.9 Seismic verification test

When specified, a seismic verification test shall be made on series reactors according to IEEE Std 693-1984.

12. Construction

12.1 Nameplates

12.1.1 Recommended information

A series reactor shall be provided with stainless steel (or equivalent) nameplate, which should include the following information:

a) Apparatus type
b) Manufacturer’s name
c) Serial number (manufacturer’s)
d) Year of manufacture
e) Temperature rise, °C
f) Type of cooling
g) Rated reactance
h) Measured reactance
i) Continuous current
j) Thermal ____ kA ____ s
k) Mechanical peak ____ kA
l) System frequency
m) System (or insulation) voltage rating ____ kV
n) Basic impulse level ____ kV
o) Altitude ____ m ____ ft above sea level (ASL)
p) Number and year of specification
q) Total weight ____ kg ____ lb

NOTE — Total weight is the weight per phase including support elements.

12.1.2 Optional information

Optional information that may be required is as follows:

a) Voltage drop
b) Number of phases
c) Drawing number
d) Customer ID number
e) Service; indoor, outdoor

12.1.3 Mounting location

Nameplates can be mounted in any location deemed suitable by the reactor manufacturer. Some operational convenience may be realized if the nameplate is mounted such that it is readable from ground level with the use of an optical aid.

Copyright © 1997 IEEE All Rights Reserved

Copyright The Institute of Electrical and Electronics Engineers, Inc.
Provided by IHS under license with IEEE
No reproduction or networking permitted without license from IHS Not for Resale

12.2 Insulator units

12.2.1 Porcelain insulator units

Porcelain insulator units shall comply with ANSI C29.9-1983. Resin or other polymer type insulators should comply with the appropriate standards.

12.3 Tap (in a reactor)

A tap in a reactor is a connection brought out of a winding at some point between its extremities, to permit changing of the impedance.

Copyright © 1997 IEEE All Rights Reserved

Copyright The Institute of Electrical and Electronics Engineers, Inc.
Provided by IHS under license with IEEE
No reproduction or networking permitted without license from IHS Not for Resale

Annex A Specific requirements for dry-type air-core filter reactors

(Normative)

A.1 General

A.1.1 Scope

The information in this annex applies to dry-type air-core reactors used in harmonic filter applications, e.g., filters with resonances in the audible frequency range. Filter reactors in ac or dc power systems are usually connected with capacitors and resistors in filter circuits, to provide a specific filter response; thus reducing harmonics by blocking or providing a low impedance path for them. This information does not apply to dc side smoothing reactors in HVDC systems.

Filter circuits are typically utilized in industrial power systems, in static var compensators, and in converter stations for HVDC transmission systems or HVDC back-to-back links. This information is applicable to filter reactors on both the ac and the dc sides of an HVDC power converter.

Filter reactors may be connected either in a shunt configuration with the system (shunt filters; usually the reactors are connected in series with capacitors), or in series configuration with the system, i.e., in series with the phase conductors (series filters; usually the reactors are connected in parallel with capacitors).

A.1.2 Annex precedence

Where information in this annex conflicts with that provided elsewhere in this standard, the annex information shall be considered to take precedence for dry-type air-core filter reactors.

A.2 Definitions

A.2.1 “effective” resistance: The value of resistance obtained by dividing total losses by the current squared at a specific frequency.

A.2.2 rated dynamic overcurrent(s): The magnitude and duration of transient currents seen by the filter reactor, such as those seen during energizing of the filter branch. The number of such dynamic overcurrents per year is critical for the design of the filter reactor.

A.2.3 rated inductance: The inductance value at rated tuning frequency.

A.2.4 rated power-frequency current: The rms value of power-frequency current continuously flowing through the reactor.

A.2.5 rated power-frequency voltage: The rms value of power-frequency voltage continuously applied across the reactor.

A.2.6 rated Q-factor: The ratio obtained by dividing reactance by “effective” resistance at rated tuning frequency and reference temperature.

A.2.7 rated short-circuit current: The maximum asymmetrical peak fault current and, if applicable, maximum constant rms fault current that can be carried for a specific time by the filter reactor.

A.2.8 rated short-time current: The rms value of short-time current and its duration (if applicable) that can be seen by the filter reactor during system disturbances.

Copyright © 1997 IEEE All Rights Reserved

Copyright The Institute of Electrical and Electronics Engineers, Inc.
Provided by IHS under license with IEEE
No reproduction or networking permitted without license from IHS Not for Resale

A.2.9 rated tuning frequency: The resonance frequency of the filter circuit in which the reactor is a component.

A.2.10 rated tuning-frequency current: The rms value of current of tuning frequency continuously flowing through the reactor.

NOTE — In certain special applications (audio-frequency signaling), the tuning-frequency current is intermittent. This should be taken into account in the evaluation of losses and temperature rise limits.

A.2.11 rated tuning-frequency voltage: The rms value of the tuning-frequency voltage continuously applied across the reactor.

A.3 General requirements

A.3.1 General

The steady-state voltage across a filter reactor is usually low compared to the system voltage; however, the reactor is subject to transient overvoltages. The contribution of harmonic currents through a filter reactor requires special consideration. The harmonic currents will both increase the losses in the reactor and increase the voltage across the reactor winding.

When connected in shunt configuration and in series with a capacitor, the continuous power-frequency current of the filter reactor is limited by the impedance of the series-connected capacitor. However, the harmonic current may be of the same order, or even larger than the power-frequency current, especially for double tuned filters. If the reactor is located between line and capacitor, the reactor may also be subjected to short-circuit currents due to system faults on the bus system between reactor and capacitor. The filter reactor will also be subjected to transient overcurrents during filter-switching operations.

When connected in series configuration with the system, the filter reactor is subjected to the system's continuous load current and currents due to system faults.

Filter reactors may also be subjected to dynamic overcurrents such as high levels of harmonics during system disturbances, such as abnormal network frequency deviations, unbalanced ac system faults, geomagnetic storms, or the energization of large system transformers.

A.3.2 Design

Filter reactors may be single phase (side-by-side mounted) or three phase (stacked configuration). They may be designed with a means for adjusting the inductance within a limited range, usually by means of taps or by the relative movement of two "split reactance" coils. The inductance variation range is subject to agreement and shall be mentioned in the inquiry or tender.

Where variation of inductance is achieved by means of tapping, the reactor winding may be split into a main winding and a tapped winding. Inductance steps may also be achieved by tapping the main winding.

Where variation in reactance is achieved by relative coil movement, the coil is split into two (usually stacked) coils with adjustable separation, thus adjusting the inductance by varying the magnetic coupling between the two winding elements.

NOTES:

1 — Air-Core filter reactors are surrounded by a stray magnetic field created by the winding ampere turns. The location of the reactor relative to metallic structures should be considered with regard to inductive heating effects during normal operation, or coupled forces during short-circuit loading of the filter reactor. Furthermore, it should be noted that metallic structures, including the ground mat, may alter the reactor's inductance and Q-factor.

Copyright © 1997 IEEE All Rights Reserved

Copyright The Institute of Electrical and Electronics Engineers, Inc.
Provided by IHS under license with IEEE
No reproduction or networking permitted without license from IHS Not for Resale

2 — In the case of three-phase configured filter reactors or filter reactors of different rating installed close to each other, attention should be paid to the magnetic coupling between reactors with regard to the influence on inductance and Q-factor.

A.3.3 Design consideration for audible sound

Due to the presence of large harmonic currents that produce forced vibrations in the human audible range of the sound spectrum, the acoustic noise of filter reactors may be quite high. Filter reactors shall therefore be designed so as to avoid, as far as possible, mechanical or acoustic resonances at major audible sound frequencies.

When a filter reactor is provided with a sound mitigation enclosure, special attention shall be given to the design and manufacture of electrical connections inside the enclosure, as they cannot be inspected during operation. Fire retardant materials should be used in the sound enclosure.

A.3.4 Environmental aspects

Since the harmonic currents may cause significant voltage across a filter reactor, the environmental conditions shall be stated clearly in the inquiry, e.g., degree of salt contamination or humidity, location of site if in the tropics or close to the sea, installation in desert areas or in heavy pollution areas such as steel mills. The environmental aspects shall be considered in the design, for example, in selecting materials and dimensioning of surface and turn-to-turn stresses, to ensure safe operation during the expected lifetime of the reactor.

In addition, other environmental conditions such as actual maximum and average ambient temperatures *at the site* (vs. standard weather bureau data), seismic requirements, wind loads, etc., should be included in the reactor specification.

A.4 Ratings

Reference to 60 Hz voltages and currents apply equally to 50 Hz or other frequency power systems.

A.4.1 Voltage drop rating

The voltage drop across the reactor depends on the voltage drop due to the 60 Hz current and of all harmonic currents. The instantaneous voltage drop is a function of the magnitude of the current components and their phase relationships. The larger reactor impedance at the higher frequency components of the harmonic current can substantially increase the voltage drop.

The rated voltage drop across the reactor shall be taken as the worst-case peak voltage of the resulting voltage drop divided by $\sqrt{2}$. If the wave shape of the resulting voltage drop is unknown, the rated voltage drop is determined by the root-sum-square (rss) method using 60 Hz and harmonic frequency voltage drops, e.g.,

$$VD_{rss} = \left(\sum_{H=1}^{\infty} VD_H^{\,2} \right)^{1/2} \qquad \text{(A-1)}$$

NOTE — The value of voltage drop obtained by the rss method is usually lower than the worst-case peak voltage drop but is typically the most important value necessary for the proper design of the filter reactor.

A.4.2 Current rating

Fundamental 60 Hz current, and all harmonic and dc currents where applicable, shall be specified. This is critical as they are required for both thermal and voltage design purposes. These currents constitute the current spectrum of the reactor.

Copyright © 1997 IEEE All Rights Reserved

Copyright The Institute of Electrical and Electronics Engineers, Inc.
Provided by IHS under license with IEEE
No reproduction or networking permitted without license from IHS Not for Resale

NOTE — In the case of filter reactors for static var compensator (SVC) application, the special nature of the load must be specified and considered in the design. Intermittent current can fluctuate over a wide frequency range with interruption periods of parts of seconds to months.

A.4.3 Thermal short-time current rating

This is equivalent to the thermal short-circuit rating in accordance with 3.4.5 and 5.6.4 of this standard. For reactors in series-connected filter circuits, this value is related to system overcurrent faults.

For reactors in shunt-connected filter circuits, this value is related to temporarily increased levels of harmonic currents due to abnormal operating conditions of the harmonic source or due to detuning caused by abnormal ac network frequency deviations. The increased level of harmonics during system faults and switching events should also be considered.

Based on the system specifics of the application, the magnitude of rated short-time current shall be specified for each filter reactor rating.

A.4.4 Mechanical short-circuit current rating

This is the maximum peak current caused by any transient or short-circuit condition (see also 3.4.2 and 5.6.3 of this standard). For reactors in series-connected filter circuits, this value is related to system overcurrent faults.

For reactors in shunt-connected filter circuits, this value is usually determined by oscillations excited by faults, especially faults remote from the filter. Also the in-rush current during filter switching must be considered.

The magnitude of the peak value at rated mechanical short-circuit current shall be specified in the enquiry and tender for each filter reactor and based on its individual application. For transients other than the fundamental, the time to crest shall be specified in the inquiry.

If transient currents of the same order of magnitude as the mechanical short-circuit rating are expected to be frequent, more than 10 times a year, the number of such transient current peaks per year shall be specified.

NOTE — Filter reactors used in conjunction with electric arc furnaces are, in particular, subjected to transient (dynamic) currents.

A.4.5 Rated Q-factor of a filter reactor

The rated Q-factor is the Q-factor at specified tuning frequency/frequencies, reference temperature, and the reactor's rated inductance. Unless otherwise specified, this is a guaranteed minimum value.

The manufacturer shall, on request, supply information concerning the expected Q-factor of the filter reactor at specified tuning frequency/frequencies with an accuracy as defined in A.6.3.

A.4.6 Reactor duty for rating

Unless otherwise specified, the reactor duty for rating is continuous operation at rated current.

A.4.7 Limits of temperature rise for continuous rating

Limits of temperature rise for filter reactors with continuous loading should adhere to 8.3 and Table 3 of IEEE Std C57.21-1990.

For filter reactors used in filter applications subjected to intermittent loads, Table 4 of this standard may be considered.

Copyright © 1997 IEEE All Rights Reserved

Copyright The Institute of Electrical and Electronics Engineers, Inc.
Provided by IHS under license with IEEE
No reproduction or networking permitted without license from IHS Not for Resale

A.4.8 Reference temperature

The reference temperature for the filter reactor shall be the temperature rise at nominal/normal operating conditions (which may differ from the rated current) plus 20 °C. The temperature rise shall be based upon the temperature rise test or calculations made by the manufacturer when temperature rise test results are not available.

A.4.9 Insulation between phases and to ground

The insulation of a filter reactor between phases and to ground depends on the design of the filter circuit and may differ from normal insulation levels for the system. For reactors connected in shunt filters, the selection of a reduced insulation level may be appropriate. BIL and switching impulse levels between phases and to ground shall be stated in the enquiry as applicable.

The rms value of all harmonic voltages, including the fundamental and, where appropriate, the dc voltage, between the reactor and ground shall be specified, as a basis for establishing insulator creepage distance, as applicable.

A.4.10 Insulation across the coil

The insulation system of a filter reactor shall be designed to withstand both the voltage drop caused by the 60 Hz and harmonic currents, and the transient overvoltages. Depending on the filter design, the insulation levels across the reactor may be different from the insulation levels between phases and to ground. BIL and switching impulse levels across the reactor shall be included in the filter reactor specification, as applicable.

A.5 Testing

A.5.1 Routine tests for filter reactors

a) Measurement of winding dc resistance
b) Measurement of inductance
c) Measurement of total losses and Q-factor
d) Lightning impulse test or turn-to-turn overvoltage test depending on the specified nominal insulation voltage level (see Tables 3 and 5).

A.5.2 Design tests for filter reactor

a) Temperature rise test
b) Measurement of variation of inductance and resistance with frequency

A.5.3 Other tests for filter reactors

a) Thermal short-time overcurrent test or calculation
b) Mechanical short-circuit test or calculation
c) Switching impulse test to ground
d) Applied potential test
e) Chopped-Wave impulse test
f) Radio influence voltage (RIV) test
g) Audible sound test or calculation
h) Seismic verification test or calculation

Copyright © 1997 IEEE All Rights Reserved

--`,,`-`-`,,`,,`,`,,`---

Copyright The Institute of Electrical and Electronics Engineers, Inc.
Provided by IHS under license with IEEE
No reproduction or networking permitted without license from IHS Not for Resale

A.5.4 Notes on routine tests for filter reactors

A.5.4.1 Measurement of winding dc resistance

The method of measurement is as generally outlined in 11.2 of this standard.

For tapped reactors, the dc resistance shall be measured at the nominal inductance tap.

A.5.4.2 Measurement of inductance

The inductance shall be measured at the rated tuning frequency only, and at all tap positions (where applicable).

Where more than one tuning frequency is specified, the inductance shall be measured at the lowest tuning frequency.

For continuously adjustable reactors, inductance measurements shall be made only at the extremes of regulation.

A.5.4.3 Measurement of total losses and Q-factor

The method of measurement is as generally outlined in 11.4 of this standard. The losses of an air-core reactor at a given frequency are assumed to be proportional to the square of the current and may be measured at reduced current (or voltage). The Q-factor may be derived from loss and impedance test measurements as shown below.

The "effective" resistance shall be measured at nominal inductance at 60 Hz and at rated tuning frequencies at any convenient ambient temperature. The resistance shall be corrected to the reference temperature specified in 11.4.2 of this standard.

The inductance and the Q-factor at a specific frequency are derived from the loss and impedance test by use of the following equations:

$$L = \frac{1}{2 \cdot \pi \cdot f} \cdot \frac{E_x}{I} \quad \text{(A-2)}$$

$$Q = \frac{E_x \cdot I}{P_z} \quad \text{(A-3)}$$

where

f is the frequency, in Hertz,
L is the inductance, in henries, at frequency f,
Q is the Q-factor at frequency f at reference temperature,
E_x is the reactance voltage, in volts (see 11.4),
I is the current, in amperes (see 11.4), and
P_z is the total losses, in watts, corrected to the reference temperature specified in 11.4.2.

NOTE — $P_z = P_r + P_s$, where P_r is the I^2R losses and P_s is the stray losses.

If a bridge method is employed, inductance and Q-factor at specific frequencies can be obtained directly from the measurement.

Test arrangements should be agreed between the manufacturer and the purchaser prior to testing.

The measurement of the Q-factor shall be performed prior to dielectric testing and, if so specified, be repeated at the end of the test sequence.

Copyright © 1997 IEEE All Rights Reserved

Copyright The Institute of Electrical and Electronics Engineers, Inc.
Provided by IHS under license with IEEE
No reproduction or networking permitted without license from IHS Not for Resale

The power-frequency winding loss is determined by measurements at power frequency. Losses for specified individual harmonic frequency components are calculated or directly obtained from measurements at the respective harmonic frequencies and added to the power-frequency loss. The total loss is referred to reference temperature.

NOTE — For filter reactors loaded with dc current, the measured dc losses, referred to the reference temperature, shall be included.

Losses shall be measured at the nominal inductance tap for tapped reactors.

A.5.4.4 Lightning impulse test

The test is as generally outlined in 11.3.6 of this standard.

The test shall be made with waves of both negative and positive polarity applied to the high-voltage terminal with the low-voltage terminal grounded.

For tapped reactors, the impulse or turn-to-turn test shall be performed, unless otherwise specified, at the maximum tap position on a routine test basis and at the maximum and minimum tap positions for the design test.

NOTE — If the location of the filter reactor in the filter circuit is such that it may be subjected to transient voltages from either end, then it should be impulsed from both ends. For this situation only, tapped filter reactors should be impulsed from both ends at the maximum tap position on a routine test basis and from both ends at maximum and minimum tap positions for the design test.

A.5.5 Notes on design tests for filter reactors

A.5.5.1 Temperature rise test

The temperature rise test is carried out at power frequency. The test current shall be adjusted to produce the total fundamental plus harmonic winding losses. If the reactor is provided with an enclosure, the enclosure shall be erected for the temperature rise test. The test procedure is outlined in 11.5 of this standard.

For tapped reactors, the temperature rise test shall be performed at the maximum inductance tap.

The equivalent test current is obtained from the following formula:

$$I_t^2 \cdot R_t = I_F^2 \cdot R_F + \sum_{n=2}^{m} I_{Hn}^2 \cdot R_{Hn} + (I_{dc}^2 \cdot R_{dc}) \qquad \text{(A-4)}$$

where

I_t is the equivalent test current (50 or 60 Hz),
I_F is the maximum continuous fundamental current,
I_{Hn} is the maximum continuous *n*th harmonic current,
R_t is the winding resistance at test current frequency corrected to maximum operating temperature,
R_F is the winding resistance at fundamental frequency corrected to maximum operating temperature,
R_{Hn} is the winding resistance at *n*th harmonic, corrected to maximum operating temperature,
m is the highest specified harmonic,
I_{dc} is the maximum continuous dc current if the reactor is subjected to dc current loading, and
R_{dc} is the winding dc resistance corrected to maximum operating temperature.

Losses that do not directly influence the temperature rise of windings (e.g., losses in spiders and brackets) shall not be included. However, when the reactor is provided with an enclosure, the possible effect on temperature rise due to any induced losses in the enclosure should be considered. Stray losses external to the winding shall be defined and explained by the manufacturer.

Copyright © 1997 IEEE All Rights Reserved

Copyright The Institute of Electrical and Electronics Engineers, Inc.
Provided by IHS under license with IEEE
No reproduction or networking permitted without license from IHS Not for Resale

The test shall provide verification of temperature limits achieved at rated current and harmonics as described in A.4.2. Acceptable average winding and hot spot temperature shall be as specified in A.4.7.

A.5.5.2 Measurement of variation of inductance and resistance with frequency

The variation of inductance and resistance with frequency shall be measured at nominal inductance and at any convenient ambient temperature. The frequency range shall be 60 Hz to 3600 Hz for the inductance and dc to 3600 Hz for the resistance, unless otherwise specified. The measured values shall be corrected to maximum operating temperature and used for calculation of the equivalent current in A.5.5.1.

A.5.6 Notes on “other” tests for filter reactors

A.5.6.1 Inductance tap for tests

All tests in this subclause shall be performed at the maximum inductance tap.

A.5.6.2 Radio influence voltage (RIV) test

The voltage of a filter reactor to ground depends on the design of the filter circuit and may differ from the nominal system voltage. If an RIV test is specified, this fact should be considered when determining the level of the test voltage to be applied between reactor and ground for the RIV test.

A.5.6.3 Audible sound test

The audible sound of a reactor may be verified by calculation or by a separate test.

Generally, an audible sound test shall be performed as prescribed in 11.8 of this standard. Since the sound radiated from the reactor depends on both the power-frequency and harmonic currents, the influence of harmonics on audible noise must also be considered. Unless otherwise specified, it is recommended to consider only the most significant harmonic currents out of the harmonic current spectrum.

Since simultaneous power-frequency and harmonic currents usually cannot be applied for testing, it is recommended to test the reactor successively with power-frequency and the harmonic currents. Additionally, the reactor shall also be tested at currents that reflect the interaction of currents having different frequencies.

For a reactor current spectrum, these sound equivalent currents are given as follows:

Reactor current	Amplitude of test current	Frequency of test current	Sound frequency
$I_1, I_2, I_3, \ldots$	I_1	f_1	$2f_1$
	I_2	f_2	$2f_2$
	I_3	f_3	$2f_3$
	—	—	—

For any pair of currents, the following currents need to be considered due to interactive effects:

Copyright © 1997 IEEE All Rights Reserved

Copyright The Institute of Electrical and Electronics Engineers, Inc.
Provided by IHS under license with IEEE
No reproduction or networking permitted without license from IHS Not for Resale

Reactor current	Amplitude of test current	Frequency of test current	Sound frequency
I_1, I_2	$(2 \cdot I_1 \cdot I_2)^{1/2}$	$\frac{(f_2 + f_1)}{2}$	$f_2 + f_1$
I_1, I_2	$(2 \cdot I_1 \cdot I_2)^{1/2}$	$\frac{(f_2 - f_1)}{2}$	$f_2 - f_1$

If the reactor is loaded with dc current, for any harmonic, including the fundamental, the following current needs to be considered due to the interaction with the dc current:

Reactor current	Amplitude of test current	Frequency of test current	Sound frequency
I_0, I_2	$(8^{1/2} \cdot I_0 \cdot I_2)^{1/2}$	$\frac{f_2}{2}$	f_2

NOTES:

1 — f_1, f_2, f_3...are the frequencies of the reactor rms currents I_1, I_2, I_3...that are interacting. Usually f_1 is the power frequency and f_2, f_3...are the frequencies of the significant harmonic currents.

2 — I_0 is the dc current to which reactors in certain applications may be subjected. The frequency of the dc current is zero.

The total sound level can be computed using the following equation:

$$L_{tot} = 10\log\left[\sum_i 10^{L_i/10}\right] \quad \text{(A-5)}$$

where

L_{tot} is the total sound level, and
L_i is the sound level of each individual component.

NOTE — Components not included in the test shall be estimated by calculation.

A.5.6.4 Thermal short-time overcurrent test

The temperature rise at the short-time overcurrent may be obtained from a combined temperature rise test. Test sequence shall include verification that steady-state temperature for the specified continuous fundamental current and harmonics has been reached, and it shall be followed by applying the specified short-time overcurrent to obtain the net resultant temperature. The acceptable hot spot temperature limit is defined in Table 4 of this standard.

As an alternative, the temperature at the specified short-time overcurrent may be calculated.

Copyright © 1997 IEEE All Rights Reserved

Copyright The Institute of Electrical and Electronics Engineers, Inc.
Provided by IHS under license with IEEE
No reproduction or networking permitted without license from IHS Not for Resale

A.5.6.5 Mechanical short-circuit current test

For reactors in shunt-connected filters, the mechanical short-circuit current is not usually significant. The mechanical and thermal capabilities of filter reactors can be verified by calculation, based on agreement between the manufacturer and the purchaser.

A.6 Tolerances

A.6.1 Inductance

If a filter reactor is not provided with a means of adjusting the inductance, tolerances on rated inductance shall be specified and guaranteed. Where taps are specified, a tolerance for each tap should be specified or a minimum tap range and maximum tap step size should be stated.

A.6.2 Losses

The average loss of all units of the same design on one order shall not exceed the guaranteed value.

A.6.3 Q-factor

Unless otherwise specified, the “as manufactured” tolerances on Q-factor should be ±20% of the value estimated by the manufacturer.

Unless otherwise specified, the Q-factor at rated tuning frequency of any filter reactor shall not deviate from the average Q-factor of all units of the same design on one order by more than 15%.

Unless otherwise specified, the Q-factor, at the rated tuning frequency and reference temperature, measured at the end of the test sequence, shall not deviate from the one measured prior to the dielectric testing by more than 3%.

A.7 Nameplate information

A.7.1 Recommended information

The following information should be included on the nameplate:

a) Apparatus type
b) Manufacturer’s name
c) Serial number
d) Year of manufacture
e) Temperature class
f) Temperature rise, °C
g) Type of cooling
h) Rated power frequency
i) Rated tuning frequency
j) Rated inductance (at rated tuning frequency)
k) Measured inductance
l) Q-factor (at rated tuning frequency) (as applicable)
m) Rated fundamental current (as applicable)
n) Rated current (rss value of all harmonic currents, including fundamental)
o) Thermal current _____kA/_____s
p) Mechanical peak current _____kA
q) BIL
r) Altitude

--`,,`-`-`,,`,,`,`,,`---
Copyright © 1997 IEEE All Rights Reserved

Copyright The Institute of Electrical and Electronics Engineers, Inc.
Provided by IHS under license with IEEE
No reproduction or networking permitted without license from IHS Not for Resale

s) Number and year of standard
t) Total weight

A.7.2 Optional information

Optional information that may be required as follows:

a) Number of phases
b) Drawing number
c) Customer ID number.
d) Service; indoor, outdoor
e) Maximum ambient temperature
f) System voltage

A.8 Filter reactor design information

The information in the following subclauses is required to design a filter reactor properly.

A.8.1 Filter reactors for standard applications

— Maximum system voltage _____kV

— Rated system voltage _____kV

— Rated Inductance: mH

— Tolerance: %

— Fundamental current rating: A

— Harmonic currents, (Hz/A): A

— Short-Time current (rms symmetrical, seconds): kA, s

— Q-value at _____Hz Q>____ or Q<____ or Q=____±____% @ (*reference temp.*) °C

— Maximum continuous voltage to ground: kV

— Lightning impulse withstand level (LIWL)

— Across reactor: kV crest

— Low-Voltage terminal to ground: kV crest

— Switching impulse withstand level (SIWL)

— Across reactor: kV crest

— Low-Voltage terminal to ground: kV crest

— Mounting; side-by-side or three-coil stacked

— Indoor or outdoor

— Taps ____%

— Steps±____

Copyright © 1997 IEEE All Rights Reserved

Copyright The Institute of Electrical and Electronics Engineers, Inc.
Provided by IHS under license with IEEE
No reproduction or networking permitted without license from IHS Not for Resale

A.8.2 Filter reactors for special applications

— Arc furnace application:	Yes/No
— Switching operations (number per year):	per year
— Short-Time overcurrent	
— Transient current (peak, duration in cycles):	kA peak, ms
— Time constant “T” for transient current decays	s
— Dynamic current (peak, duration in ms):	kA peak, ms
— Time constant “T” for dynamic current decay (T):	s
— Dynamic overvoltage (rms, duration in ms):	kV, ms
— Dynamic overvoltage time constant	s

A.8.3 Environmental conditions

— Seismic:	g
— Pollution levels: salt, industrial, etc.	
— Ambient temperature (site)	
— Annual average:	°C
— Annual maximum:	°C
— Annual minimum:	°C

Copyright © 1997 IEEE All Rights Reserved

Copyright The Institute of Electrical and Electronics Engineers, Inc.
Provided by IHS under license with IEEE
No reproduction or networking permitted without license from IHS Not for Resale

Annex B Specific requirements for dry-type air-core shunt capacitor reactors

(Normative)

B.1 General

B.1.1 Scope

This information applies to dry-type air-core reactors used in series with shunt-connected capacitors.

Air-Core reactors are used in series with shunt-connected capacitor banks to limit in-rush currents due to capacitor bank switching, reduce out-rush currents caused by close-in faults, and to "detune" capacitor banks so as to avoid resonance with the electrical system. During normal operation the capacitor current flows through the shunt capacitor reactor. The maximum permissible (overload) current of the shunt capacitor reactor is based on the corresponding value for the capacitor bank.

Shunt capacitor reactors may be used at industrial, distribution, and transmission voltage levels and are connected to capacitor banks ranging from a few hundred kilovar to several tens of megavar.

Shunt capacitor reactors shall generally comply with the requirements given in IEEE Std 18-1992. [9]

B.1.2 Annex precedence

Where information in the annex conflicts with that provided elsewhere in the standard, the annex information shall take precedence for the respective reactor type.

B.1.3 References

This annex shall be used in conjunction with the following publications, where applicable.

ANSI C37.06-1987 (Reaff 1994), American National Standard for Switchgear—AC High-Voltage Circuit Breakers Rated on a Symmetrical Current Basis—Preferred Ratings and Related Required Capabilities.

ANSI C37.12-1991, American National Standard Specification Guide for AC High-Voltage Circuit Breakers Rated on a Symmetrical Current Basis.

IEEE Std 18-1992, IEEE Standard for Shunt Power Capacitors (ANSI).

IEEE C57.21-1990 (Reaff 1995), IEEE Standard Requirements, Terminology, and Test Code for Shunt Reactors Rated Over 500 kVA (ANSI).

B.2 Definitions

B.2.1 "effective" resistance: The value of resistance obtained by dividing total losses by the current squared at a specific frequency.

B.2.2 Q-factor: The ratio of reactance to "effective" resistance at specified transient in-rush frequency and reference temperature.

[9] For information about references in this annex, see B. 1.3.

Copyright © 1997 IEEE All Rights Reserved

Copyright The Institute of Electrical and Electronics Engineers, Inc.
Provided by IHS under license with IEEE
No reproduction or networking permitted without license from IHS Not for Resale

B.2.3 rated continuous current: The effective root-mean-square (rms) value of power-frequency current (including the effect of continuous overvoltage, capacitor tolerance, and harmonics) that can be carried by the reactor for the duty specified without exceeding the specified temperature limits, and within the limits of established standards.

B.2.4 rated inductance: The inductance value of the shunt capacitor reactor that will provide the required reduction of transient in-rush current at the specified frequency.

B.2.5 rated transient in-rush (or out-rush) current: The peak value of the highest transient in-rush, or out-rush, current at the specified frequency that the shunt capacitor reactor is capable of withstanding with no loss of electrical or mechanical integrity.

B.2.6 rated transient in-rush (or out-rush) frequency: The resonant frequency of the shunt capacitor reactor, associated shunt capacitor bank, and relevant parts of the system for the operating conditions of capacitor bank switching or worst-case “close in” fault.

B.3 General requirements

B.3.1 General

The steady-state voltage across a shunt capacitor reactor is usually low compared to the system voltage. However, shunt capacitor reactors are usually switched very frequently, often several times per day, and subject to routine transient overvoltages. Also, the presence of harmonic currents through a shunt capacitor reactor requires special consideration as the harmonic currents will both increase the losses in the reactor and increase the voltage drop across the reactor winding.

A shunt capacitor reactor is subject to in-rush current transients due to switching operations and out-rush transient currents due to close-in faults. If the reactor is arranged between line and capacitor, the reactor may also be subject to short-circuit currents due to faults on the bus between reactor and capacitor.

Therefore, a complete specification for shunt capacitor reactors should include, as applicable, specifics on switching duty; symmetrical short-circuit current duration and magnitude; asymmetrical (peak) short-circuit current; and maximum transient in-rush and out-rush current magnitude, frequency, and duration.

B.3.2 Design

Shunt capacitor reactors for in-rush/out-rush current limitation are normally single-phase units applied in three-phase sets and are normally not tapped. They may be mounted in any conventional configuration, but are usually arranged in a side-by-side or three-phase vertical stacked arrangement.

B.3.3 Design considerations for harmonics

The impedance of a shunt capacitor decreases with higher frequency and can result in significant harmonic frequency content in a shunt capacitor bank’s current. This characteristic is considered in applicable standards for shunt power capacitors. It also must be noted that the impedance of the shunt capacitor reactor increases with higher frequency. Therefore, the harmonic currents of higher frequencies are more pronounced in the shunt capacitor bank current spectrum than the corresponding harmonic voltages in the system voltage spectrum.

The relations are demonstrated by the following formulas, which are valid for harmonics of frequency below the resonance frequency of the shunt capacitor and the shunt capacitor reactor. These are normally the harmonics of interest.

$$THD = \sqrt{\Sigma\left(\frac{U_h}{U_1}\right)^2} \qquad \text{(B-1)}$$

Copyright © 1997 IEEE All Rights Reserved

Copyright The Institute of Electrical and Electronics Engineers, Inc.
Provided by IHS under license with IEEE
No reproduction or networking permitted without license from IHS Not for Resale

$$F_{hI} = \sqrt{1 + \Sigma\left(\frac{h \cdot U_h}{U_1}\right)^2} \quad \text{(B-2)}$$

$$F_{hU} = \sqrt{1 + \Sigma\left(\frac{h^2 \cdot U_h}{U_1}\right)^2} \quad \text{(B-3)}$$

where

THD	is the total harmonic distortion of the ac bus voltage,
F_{hI}	is the harmonic current distortion factor of the shunt capacitor bank current,
F_{hU}	is the harmonic voltage distortion factor of the shunt capacitor reactor voltage,
U_1	is the fundamental voltage of the ac bus,
U_h	is the harmonic voltage of the ac bus, and
h	is the harmonic order.

The continuous current for shunt capacitor reactors can be calculated from the following formulas:

$$I_{1N} = \frac{MVA_r}{\sqrt{3} \cdot V_s} \quad \text{(B-4)}$$

$$I_{eff} = I_{1N} \cdot F_v \cdot F_t \cdot F_{hI} \quad \text{(B-5)}$$

where

I_{1N}	is the nominal fundamental current in kiloamperes,
MVA_r	is the nominal three-phase rating of capacitor bank (at nominal ac voltage),
V_s	is the nominal line-to-line system voltage in kilovolts,
I_{eff}	is the effective (rated) rms current of the shunt capacitor reactor,
F_v	is the voltage factor; ratio between maximum system rms voltage and nominal system rms voltage,
F_t	is the capacitance tolerance factor for the shunt capacitor rating in per-units, and
F_{hI}	is defined above.

NOTES:

1 — It must be considered that due to the low impedance of the shunt capacitor bank, the content of high order harmonics on the ac bus normally is reduced, and that for high-order harmonics the impedance of the shunt capacitor reactor will be significant.

2 — If, with the shunt capacitor bank connected, there are significant ac bus harmonic voltages of frequencies at or above the resonance frequency, the continuous harmonic loading of the shunt capacitor reactor may be significant. Then Annex A of this standard may be more applicable.

Based on the above, a few guidelines for establishing the “effective” current rating of the shunt capacitor reactor are offered for capacitors manufactured according to ANSI and IEEE standards:

F_v	is normally at least 1.05 and can be much greater. If in doubt, a value of at least 1.1 should be used.
F_t	is normally 1.15, but the capacitor manufacturer should be consulted on tolerance.
F_{hI}	should be at least 1.075 for an ungrounded capacitor bank, or at least 1.18 for a grounded capacitor bank.

Therefore, the guideline for an ungrounded capacitor bank is

$$I_{eff} = I_1 \cdot (1.1 \cdot 1.15 \cdot 1.075) = I_1 \cdot 1.36 \quad \text{(B-6)}$$

Copyright © 1997 IEEE All Rights Reserved

Copyright The Institute of Electrical and Electronics Engineers, Inc.
Provided by IHS under license with IEEE
No reproduction or networking permitted without license from IHS Not for Resale

Similarly, the guideline for a grounded capacitor bank is

$$I_{eff} = I_1 \cdot (1.1 \cdot 1.15 \cdot 1.18) = I_1 \cdot 1.49 \quad \text{(B-7)}$$

The device utilized for switching the capacitor bank shall be selected in consideration of the above effective current ratings.

B.3.4 Design considerations for in-rush frequency

Due to the repetitive nature of the in-rush duty, the reactor should not have mechanical resonances close to twice the in-rush frequency. The frequency band for the in-rush frequency due to different shunt capacitor bank(s) and system operating configurations shall be specified, if it exceeds ±2%.

B.4 Ratings

Reference to 60 Hz voltages and currents apply equally to 50 Hz or other power system operating frequencies.

B.4.1 Rated continuous current

The rated continuous current of the shunt capacitor reactor shall be selected to be at least equal to the maximum permissible continuous current of the associated capacitor bank or the effective (rated) current as calculated above, whichever is greater. This current should be specified in the inquiry.

NOTES:

1 — As specified in 5.2.3 of IEEE Std 18-1992, the allowed occasional rms current through a shunt capacitor bank is 1.80 times the normal fundamental current, provided that F_v = 1.1 is not exceeded and capacitors are designed to operate up to 135% of rated kilovar, including the kilovar due to fundamental voltage and to all harmonic voltages.

2 — The capacitor bank capacitance tolerance specified in IEEE Std 18-1992 is ±15%, implying a tolerance factor F_t of 1.15. See B.3.3.

B.4.2 Overload current rating

The maximum permissible overload current of the shunt capacitor reactor is based on the corresponding value for the capacitor bank as determined by system operating conditions and information in IEEE Std 18-1992.

NOTE — For special capacitor applications, such as static var systems or HVDC systems, the overload currents as specified in power capacitor standards are not always applicable.

B.4.3 Rated transient in-rush current

This is the highest transient in-rush current covering all recognized cases of regular capacitor bank or bank section switching (including out-rush during close-in faults). The relevant transient in-rush resonant frequency shall be specified in the inquiry. The manufacturer shall, upon request, supply information about the expected Q-factor of the shunt capacitor reactor at this frequency with an accuracy as defined in B.6.2. The shunt capacitor reactor shall be capable of withstanding the dynamic effects of this rated transient in-rush current.

NOTES:

1 — The thermal effect of the transient in-rush current is normally not significant.

2 — If the shunt capacitor reactor is required to withstand contingency overcurrents in excess of the rated transient in-rush current, for example due to close-in bus faults, the magnitude and duration of such overcurrents shall be specified.

Copyright © 1997 IEEE All Rights Reserved

Copyright The Institute of Electrical and Electronics Engineers, Inc.
Provided by IHS under license with IEEE
No reproduction or networking permitted without license from IHS Not for Resale

3 — Acceptable limits for capacitive transient in-rush current and frequency for breaker closing are defined in Tables 1A, 2A, and 3A, “Preferred Capacitive Current Switching Ratings,” of ANSI C37.06-1987.

B.4.4 Voltage rating

The power-frequency voltage drop is equal to the reactor rated current multiplied by the reactor impedance at power frequency. However, a shunt capacitor reactor must be able to operate continuously with a much higher voltage across the reactor due to the presence of harmonics. Unless otherwise specified, the shunt capacitor reactor shall be rated for a continuous voltage across the reactor that is five times the fundamental voltage drop. (This means a value of five for the harmonic voltage distortion factor F_{hU}, as defined in B.3.3, is assumed).

The maximum transient in-rush or out-rush peak voltage across the reactor shall be specified.

B.4.5 Reactor duty for rating

Unless otherwise specified, the reactor duty for rating is continuous operation at rated current.

The estimated repetition rate of transient in-rush or out-rush current events shall be specified in the inquiry as the number of events per day or the number of events per year.

NOTES:

1 — For special capacitor applications, such as in static var systems, the shunt capacitor bank may be subjected to intermittent duty.

2 — Limits for the number of transient in-rush current events for shunt capacitor banks, in relation to transient in-rush current amplitude, are defined in 8.3.2.2 of IEEE Std 18-1992.

B.4.6 Limits of temperature rise for continuous rating

For reactors with intermittent loading, Table 4 of this standard may be used. However, where reactors are specified to be energized continuously, limits of temperature rise for shunt capacitor reactors shall be as specified in 8.3 and Table 3 of IEEE Std C57.21-1990.

B.4.7 Insulation level

Unless otherwise specified, the insulation level shall correspond to the highest voltage level for equipment on the system in which the shunt capacitor reactor is to be installed. If one terminal of the shunt capacitor reactor is intended to be directly grounded, nonuniform insulation may be applied by agreement between the manufacturer and the purchaser. BIL and switching impulse levels across the reactor and to ground should be specified in the inquiry as applicable. The BIL levels shall be selected from the standard values in Table 5.

The rms value of all harmonic voltages, including the fundamental voltage, between the reactor and ground or between phases (for stacked reactors) shall be specified as a basis for establishing insulator creepage distance, as applicable.

B.5 Testing

B.5.1 Routine tests for shunt capacitor reactors

a) Measurement of winding dc resistance
b) Measurement of inductance
c) Measurement of losses and Q-factor
d) Lightning impulse test or turn-to-turn overvoltage test depending on reactor voltage class (see Tables 3 and 5).

Copyright © 1997 IEEE All Rights Reserved

Copyright The Institute of Electrical and Electronics Engineers, Inc.
Provided by IHS under license with IEEE
No reproduction or networking permitted without license from IHS Not for Resale

B.5.2 Design tests for shunt capacitor reactors

— Temperature rise test

B.5.3 Other tests for shunt capacitor reactors

a) Thermal short-time overcurrent test or calculation
b) Mechanical short-circuit test or calculation
c) In-Rush current withstand test or calculation
d) Chopped-Wave impulse test
e) Audible sound test or calculation
f) Seismic verification test or calculation
g) Mechanical resonance test or calculation

B.5.4 Notes on routine test for shunt capacitor reactors

B.5.4.1 Measurement of winding dc resistance

The method of measurement is as generally outlined in 11.2 of this standard.

B.5.4.2 Measurement of inductance

The inductance shall be measured at 60 Hz and at transient in-rush frequencies at any convenient ambient temperature.

B.5.4.3 Measurement of losses and Q-factor

The method of measurement is as generally outlined in 11.4 of this standard. The losses of an air-core reactor are assumed to be proportional to the square of the current and may be measured with reduced current (or voltage). The Q-factor may be derived from loss and impedance test measurements as shown below. At high harmonic frequencies the test arrangement should be validated for high-frequency performance to ensure that the impedance of the connections does not contribute to errors in the measurements.

The “effective” resistance shall be measured at rated transient in-rush frequency at any convenient ambient temperature. The resistance shall be corrected to the reference temperature specified in 11.4.2 of this standard.

The loss and impedance test shall be carried out at the fundamental frequency and/or the in-rush frequency.

The inductance and the Q-factor at a specific frequency are derived from the loss and impedance test by use of the following equations:

$$L = \frac{1}{2 \cdot \pi \cdot f} \cdot \frac{E_x}{I} \quad \text{(B-8)}$$

$$Q = \frac{E_x \cdot I}{P_z} \quad \text{(B-9)}$$

where

f is the frequency, in Hertz,
L is the inductance, in henries, at frequency f,
Q is the Q-factor at frequency f,
E_x is the reactance voltage, in volts at frequency f (see 11.4),
I is the current, in amperes, at frequency f (see 11.4), and
P_z is the total losses, in watts, at frequency f, corrected to the reference temperature specified in 11.4.2.

Copyright © 1997 IEEE All Rights Reserved

Copyright The Institute of Electrical and Electronics Engineers, Inc.
Provided by IHS under license with IEEE
No reproduction or networking permitted without license from IHS Not for Resale

NOTE — $P_z = P_r + P_s$, where P_r is the I^2R losses and P_s is the stray losses.

If a bridge method is employed, inductance and Q-factor at specific frequencies can be obtained directly from this measurement.

Test arrangements should be agreed to between the manufacturer and the purchaser prior to testing.

The measurement of the Q-factor shall be performed prior to dielectric testing and, if so specified, shall be repeated at the end of the test sequence.

Losses are referred to rated current at power frequency.

B.5.4.4 Lightning impulse test

The test is as generally outlined in 11.3.6 of this standard.

The test shall be made with both negative and positive polarity applied to the high-voltage terminal (based on the installed configuration) with the low-voltage terminal grounded.

B.5.5 Notes on design tests for shunt capacitor reactors

B.5.5.1 Temperature rise test

The temperature rise test is carried out at power frequency as specified in 11.5 of this standard. Limits for temperature rise are specified in B.4.6.

B.5.6 Notes on “other tests” for shunt capacitor reactors

B.5.6.1 Mechanical short-circuit test

For shunt capacitor reactors, the mechanical short-circuit test may be carried out at power frequency in accordance with 11.6.2, 11.6.3, and 11.6.4 of this standard. As an alternative, the short-circuit capability may be verified by calculation.

B.5.6.2 Transient in-rush (or out-rush) current withstand test

For shunt capacitor reactors, the transient in-rush current requirement is usually (except for some back-to-back switching applications) lower in magnitude than the power-frequency fault current requirement and thus may be easily verified by calculation.

B.5.6.3 Mechanical resonance test

Due to the repetitive nature of the in-rush duty, consideration should be given to performing a test to verify that the mechanical resonances of the winding are at least 10% away from a value of twice the in-rush current frequency. The manufacturer shall propose a suitable test procedure. As an alternative, this may be verified by calculation.

B.6 Tolerances

B.6.1 Inductance

The inductance is +20/–0% of rated inductance or as specified.

Copyright © 1997 IEEE All Rights Reserved

Copyright The Institute of Electrical and Electronics Engineers, Inc.
Provided by IHS under license with IEEE
No reproduction or networking permitted without license from IHS Not for Resale

B.6.2 Q-Factor

Unless otherwise specified, the tolerance on Q-factor should be ±20% of the value estimated by the manufacturer.

Unless otherwise specified, the Q-factor, at the in-rush frequency and reference temperature, measured at the end of the test sequence, shall not deviate from the one measured prior to the dielectric testing by more than 3%.

B.7 Nameplate information

B.7.1 Recommended information

The following information should be included on the nameplate:

a) Apparatus type
b) Manufacturer’s name
c) Serial number
d) Year of manufacture
e) Thermal class of insulation
f) Temperature rise, °C
g) Type of cooling
h) Rated power frequency
i) Rated inductance (at rated in-rush/out-rush frequency)
j) Measured inductance
k) Rated continuous current
l) Mechanical peak current _____kA
m) Voltage drop
n) BIL
o) Altitude
p) Number and year of specification
q) Number of this standard
r) Total weight

B.7.2 Optional information

Optional information that may be required is as follows:

a) Number of phases
b) Drawing number
c) Customer ID number
d) Service; indoor, outdoor
e) Maximum ambient temperature
f) System voltage
g) Thermal current ____ kA___s
h) In-Rush frequency
i) Q-Factor (at transient in-rush frequency)

Copyright © 1997 IEEE All Rights Reserved

Copyright The Institute of Electrical and Electronics Engineers, Inc.
Provided by IHS under license with IEEE
No reproduction or networking permitted without license from IHS Not for Resale

Annex C Specific requirements for dry-type air-core discharge current-limiting reactors for series capacitor bank applications

(Normative)

C.1 General

C.1.1 Scope

This information applies to dry-type air-core discharge current-limiting reactors used in the bypass/discharge circuit of high-voltage series compensation capacitor bank applications.

Discharge current-limiting reactors are usually integral components of distribution and transmission voltage level series capacitor banks. Basically they are installed to limit the capacitor discharge current when the series capacitor bank bypass gap sparks over or the bypass switch closes.

The information is not directly applicable to reactors applied in series with a thyristor switch in controllable series capacitor applications. For such reactors, the information in this annex regarding short-circuit and discharge current rating is applicable, while Annex A (for filter reactors) may be more appropriate for other design and performance characteristics.

C.1.2 Annex precedence

Where information in the annex conflicts with that provided elsewhere in the standard, the annex information shall take precedence for the respective reactor type.

C.1.3 References

This annex shall be used in conjunction with the following publications, as appropriate:

IEC 143-1-1992, Series capacitors for power systems—Part 1: General—Performance, testing and rating—Safety requirements—Guide for installation.

IEC 143-2-1994, Series capacitors for power systems—Part 2: Protective equipment for series capacitor banks.

IEEE Std 824-1994, IEEE Standard for Series Capacitors in Power Systems (ANSI).

C.2 Definitions

C.2.1 discharge frequency: The resonant frequency of the discharge current-limiting reactor and associated series capacitor bank at capacitor bank discharge due to breaker closing or spark gap ignition.

C.2.2 Q-factor: The ratio between reactance and resistance at specified discharge frequency and reference temperature.

C.2.3 rated continuous current: The rms value of power-frequency current continuously flowing through the reactor (including harmonics).

C.2.4 rated discharge current: The peak value of the highest discharge current specified for the discharge current-limiting reactor mechanical design (including power-frequency fault current).

Copyright © 1997 IEEE All Rights Reserved

Copyright The Institute of Electrical and Electronics Engineers, Inc.
Provided by IHS under license with IEEE
No reproduction or networking permitted without license from IHS Not for Resale

C.2.5 rated inductance: The inductance value at power frequency specified for the discharge current-limiting reactor.

C.3 General requirements

C.3.1 General

Typical one-line diagrams for a series capacitor bank with discharge current-limiting reactor are shown in Figure C.1. Normally the bypass switch is open and the line current flows through the capacitors. For this condition there is no current through, and no voltage across, the reactor. However, when the bypass switch is in the closed position, current can flow in the discharge current-limiting reactor for extended periods of time. At the frequency of the power system, the reactance of the reactor is much less than that of the capacitor. Hence, during the bypassed condition, the current in the reactor is almost the same as the line current. Under this condition, the reactor will be exposed in full measure to power system fault currents. However, transient voltages across the reactor are limited by the capacitors, gaps, and metal oxide varistor(s) ("MOV"s) that are electrically in parallel with the reactor under this bypassed condition.

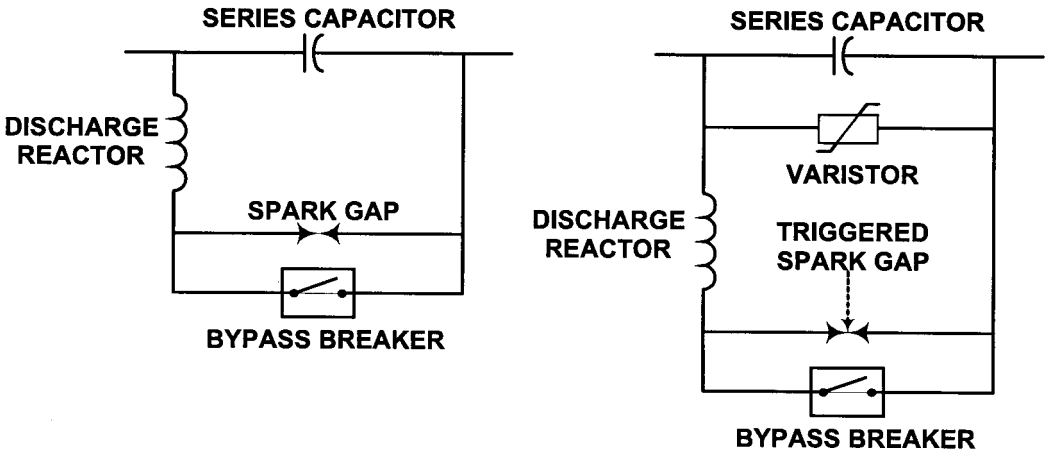

Figure C.1—Typical configurations for a series compensation capacitor with discharge current-limiting reactor

Discharge current-limiting reactors must be designed to withstand system power-frequency fault currents and higher frequency capacitor discharge current. Since the spark gap is ignited or the breaker is closed under conditions of short-circuit current through the series capacitor bank, the maximum discharge current peak consists of the capacitive discharge current superimposed upon the power-frequency fault current. The maximum total peak current for a discharge current-limiting reactor shall be specified as well as the damping factor for the discharge current.

When the series capacitor is bypassed, the reactor/capacitor combination forms a parallel resonance circuit. It is suggested that the selection of the inductance, the permissible manufacturing tolerance for that inductance, and the harmonic current rating of the reactor take into account the harmonic current in the line and the possible amplification of that current caused by the interaction of the paralleled reactor/capacitor combination with the system.

In some cases, the discharge damping circuit may be designed with a reactor of low Q-factor at the discharge frequency or utilize a damping resistor in parallel with the reactor. The function of the resistor is to quickly damp the capacitor discharge current. The discharge damping reactor is equipped with a device (spark gap or "MOV") that will connect the resistor in the discharge circuit only during capacitor discharge.

Copyright © 1997 IEEE All Rights Reserved

Copyright The Institute of Electrical and Electronics Engineers, Inc.
Provided by IHS under license with IEEE
No reproduction or networking permitted without license from IHS Not for Resale

C.3.2 Design

Discharge current-limiting reactors are single-phase units usually mounted on a high-voltage elevated platform with the series capacitors. The platform is mounted on insulators to provide full phase insulation to ground. Therefore, the impulse rating of the reactor to the platform (potential) is much lower than system phase-to-ground requirements. Also, a metal oxide varistor is usually connected in the bypass circuit with the reactor to limit the voltage across the capacitor and reactor. Discharge current-limiting reactors are normally not tapped.

C.3.3 Corona shielding

Normally the discharge current-limiting reactors are shielded from full phase-to-ground voltage exposure by the platform. However, if the reactor is located at the outer edge of the platform or outside the platform, corona shielding may be needed. The requirement for corona shielding due to exposure to the full phase-to-ground voltage shall be specified, if applicable.

C.3.4 Discharge frequency considerations

Due to the repetitive nature of the discharge duty, the reactor should not have mechanical resonances close to twice the discharge frequency. The frequency band for the discharge frequency due to different configurations of the series compensation arrangement shall be specified. Also, the expected frequency range and magnitude of discharge currents due to different operating configurations of the series compensation capacitor bank shall be specified when applicable.

C.4 Ratings

Reference to 60 Hz voltages and currents apply equally to 50 Hz or other frequency power systems.

C.4.1 Rated continuous current

The rated continuous current of the discharge current-limiting reactor is the current that can be carried by the reactor when operating for the duty specified as a series element in the transmission line without exceeding the temperature limits and within the limits of established standards.

C.4.2 Thermal short-time current rating

The thermal short-time current rating is determined as specified in 3.4.5 and 5.6.4 of this standard.

C.4.3 Rated discharge current (peak value)

The rated discharge current is the highest discharge current covering all recognized cases of discharge of the series capacitor bank as a consequence of power-frequency fault current. The high-frequency capacitor discharge current will be superimposed on the power-frequency fault current. The peak currents should be added together to determine the worst-case peak current duty for the discharge current-limiting reactor unless more accurate system information is available. With modern protection schemes, the actual peak current is lower than the arithmetic sum. The relevant discharge resonant frequency shall be specified. The manufacturer shall, upon request, supply information about the expected Q-factor of the discharge current-limiting reactor at this frequency. The discharge current-limiting reactor shall be capable of withstanding the dynamic effects of this rated discharge current.

NOTES:

1 — The thermal effect of the discharge current is normally not significant for the reactor.

2 — The peaks of the capacitor discharge current and the fundamental frequency fault current do not normally coincide.

3 — In the case where a damping resistor is used in the discharge damping circuit, the discharge frequency may be a different value depending on whether the resistor is connected or not.

Copyright © 1997 IEEE All Rights Reserved

--`,,`-`-`,,`,,`,`,,`---

Copyright The Institute of Electrical and Electronics Engineers, Inc.
Provided by IHS under license with IEEE
No reproduction or networking permitted without license from IHS Not for Resale

C.4.4 Voltage rating

The power-frequency voltage drop is equal to the reactor rated current multiplied by the reactor impedance at power frequency.

The maximum discharge peak voltage across the reactor shall be specified.

C.4.5 Q-Factor

When the damping of the discharge current is determined by the losses of the discharge current-limiting reactor, a maximum Q-factor at the discharge frequency may be specified. Under these conditions, the decay of the capacitor discharge current is governed by the Q-factor of the reactor at the discharge frequency and thus the time constant of the discharge current decay is $2L/R_f$. The time constant of the decay of the capacitor discharge current should not be confused with the reactor time constant, which is L/R_f.

C.4.6 Reactor duty for rating

Subclauses 3.5 and 8.1.4 of this standard apply.

The estimated frequency of discharge current events shall be specified as the number of events per day or number of events per year.

C.4.7 Insulation level

The insulation of the discharge current-limiting reactor depends on the insulation coordination for the series capacitor arrangement. The maximum voltage on the capacitor at time of “gap sparkover” or switch closure should be specified. BIL and switching impulse levels across the reactor and to platform (potential) shall be specified as applicable. The BIL level shall be selected from the standard values in Table 5 in this standard.

The rms value of all harmonic voltages, including the fundamental voltage, between the reactor and platform (potential), shall be specified as a basis for insulator creepage distance, as applicable.

C.5 Testing

C.5.1 Routine tests for discharge current-limiting reactors

a) Measurement of winding dc resistance
b) Measurement of inductance
c) Measurements of losses and Q-factor
d) Lightning impulse test or turn-to-turn overvoltage test depending on reactor voltage class (See Tables 3 and 5 in the standard.)

C.5.2 Design tests for discharge current-limiting reactors

a) Temperature rise test
b) Discharge current test
c) Fault-Current test
d) Modified short-circuit test (mechanical short-circuit/discharge current test and thermal short-circuit test)

NOTE — Item d) is an alternative to b) and c).

Copyright © 1997 IEEE All Rights Reserved

Copyright The Institute of Electrical and Electronics Engineers, Inc.
Provided by IHS under license with IEEE
No reproduction or networking permitted without license from IHS Not for Resale

C.5.3 Other tests for discharge current-limiting reactors

a) Seismic verification test or calculation
b) Mechanical resonance test

C.5.4 Notes on routine tests for discharge current-limiting reactors

C.5.4.1 Measurement of winding dc resistance

The method of measurement is as generally outlined in 11.2 of this standard.

C.5.4.2 Measurement of inductance

The inductance shall be measured at power frequency and at discharge frequencies at any convenient ambient temperature.

C.5.4.3 Measurement of losses and Q-factor

The method of measurement is as generally outlined in 11.4 of this standard. The losses of an air-core reactor are assumed to be proportional to the square of the current and may be measured at reduced current (or voltage). The Q-factor may be derived from loss and impedance measurements as shown below. At high frequencies, the test arrangement should be validated for high-frequency performance to ensure that the impedance of the connections does not contribute to errors in the measurements. Losses are referred to rated current at power frequency.

The resistance shall be measured at discharge frequency at any convenient ambient temperature. The resistance shall be corrected to the reference temperature specified in 11.4.2 of this standard.

The inductance and the Q-factor at a specific frequency are derived from the loss and impedance test by use of the following equations:

$$L = \frac{1}{2 \cdot \pi \cdot f} \cdot \frac{E_x}{I} \quad \text{(C-1)}$$

$$Q = \frac{E_x \cdot I}{P_z} \quad \text{(C-2)}$$

where

f is the frequency, in Hertz,
L is the inductance, in henries, at frequency f,
Q is the Q-factor at frequency f,
E_x is the reactance voltage, in volts at frequency f (see 11.4),
I is the current, in amperes at frequency f (see 11.4), and
P_z is the total losses, in watts at frequency f, corrected to the reference temperature specified in 11.4.2.

NOTE — $P_z = P_r + P_s$ where P_r is the I^2R losses and P_s is the stray losses.

Test arrangements should be agreed to between the manufacturer and the purchaser prior to testing.

The measurement of the Q-factor shall be performed prior to dielectric testing and, if so specified, be repeated at the end of the test sequence.

Copyright © 1997 IEEE All Rights Reserved

Copyright The Institute of Electrical and Electronics Engineers, Inc.
Provided by IHS under license with IEEE
No reproduction or networking permitted without license from IHS Not for Resale

C.5.4.4 Lightning impulse test

The test is generally outlined in 11.3.6 of this standard.

C.5.5 Notes on design tests for discharge current-limiting reactors

C.5.5.1 General

At the time of writing of this standard, IEEE Std 824-1994 [10] was in the process of revision. Therefore, design tests on discharge current-limiting reactors should be made in accordance with the information found in the following subclauses. Design tests on similar units may be used as evidence of compliance provided, as applicable, mechanical stresses, electrical stresses, or maximum temperatures of previously tested reactors, of similar construction, can be shown to be equal to or more severe than those that will be experienced by the newly specified unit.

C.5.5.2 Discharge current test

The discharge current-limiting reactor shall be subjected to a test current not less than 1.1 times the "rated discharge current" as defined in C.4.3. The discharge current test may be carried out with a test current comprising a half-cycle current wave of power frequency, and with the same amplitude. The test should be repeated 25 times, without evidence of mechanical or electrical damage.

NOTE — The 1.1 factor is applied to the "rated discharge current" to provide and demonstrate margin for service duty.

C.5.5.3 Fault current test

The discharge current-limiting reactor shall be tested to demonstrate that it will carry its rated power-frequency fault current (including peak asymmetrical) for its rated duration without evidence of excessive temperature, or mechanical or electrical damage. The test shall be carried out at power frequency in accordance with 11.6.2, 11.6.3, and 11.6.4 of this standard.

C.5.5.4 Modified short-circuit (mechanical short-circuit/discharge current and thermal short-circuit test) test

As an alternative to the test program described in C.5.5.2 and C.5.5.3, a "modified short-circuit test" as described in this subclause can be performed based on agreement between the purchaser and the manufacturer. This test procedure has evolved within the industry and has been used on various projects. It is suggested that a power-frequency short-circuit test be performed with 10 cycles of symmetrical test current of peak value equal to 1.1 times the peak value of "rated discharge current." A test-current duration of 10 cycles subjects the reactor to 20 peaks of mechanical loading. Since mechanical loading is sustained, this "modified short-circuit test" subjects the reactor simultaneously to mechanical loads of duration and magnitude in excess of any seen in service and is thus a representative demonstration of reactor mechanical integrity. The test is carried out generally in accordance with 11.6.2, 11.6.3, and 11.6.4 of this standard.

The thermal short-circuit test will be identical to that of a standard current-limiting reactor and will be performed at the rated symmetrical short-circuit level for the duration specified. (If not specified, the duration shall be 3 s.)

NOTE — *Test lab capabilities:* Due to the possibly very high "discharge current rating" of discharge current-limiting reactors, test laboratories may not be able to carry out the discharge current, fault current, and modified short-circuit tests at specified levels. In this case, consideration should be given to verifying reactor capability by calculation.

[10] IEEE Std 824-1994, IEEE Standard for Series Capacitors in Power Systems (ANSI), has since been approved and published.

Copyright © 1997 IEEE All Rights Reserved

--`,,`-`-`,,`,,`,`,,`---

Copyright The Institute of Electrical and Electronics Engineers, Inc.
Provided by IHS under license with IEEE
No reproduction or networking permitted without license from IHS Not for Resale

C.5.5.5 Temperature rise test

The test shall be made according to 11.5 of this standard, mounting the discharge current-limiting reactor similarly to that used in service. Apply rated continuous power-frequency current and measure temperature conditions for the length of time required to reach stable thermal conditions and to establish temperature rise above 40 °C ambient. The temperature rise should not exceed the manufacturer's established limit for the materials used.

C.5.6 Notes for other tests for discharge current-limiting reactors

C.5.6.1 Mechanical resonance test

Due to the repetitive nature of the discharge duty, consideration should be given to performing a test to verify that the winding mechanical resonances are at least 10% away from a value of twice the discharge current frequency, considering the frequency band of the discharge current. The manufacturer shall propose a suitable test procedure. As an alternative, the winding mechanical resonance may be verified by calculation.

C.6 Tolerances

C.6.1 Inductance

The tolerance shall be +10/–0% of rated inductance or as specified. The selection of the manufacturing tolerance for the reactor inductance should take into account possible system interactive effects caused by the reactor/capacitor combination.

C.6.2 Q-Factor

Unless otherwise specified, the "as manufactured" tolerance on Q-factor should be ±20% of the value estimated by the manufacturer.

Unless otherwise specified, the Q-factor, at the discharge frequency and reference temperature, measured at the end of the test sequence, shall not deviate from the value measured prior to dielectric testing by more than 3%.

C.7 Nameplate information

C.7.1 Recommended information

The following information should be included on the nameplate:

a) Apparatus type
b) Manufacturer's name
c) Serial number
d) Year of manufacture
e) Thermal class of insulation
f) Temperature rise, °C
g) Type of cooling
h) Rated power frequency
i) Rated inductance (at rated power frequency)
j) Measured inductance
k) Rated continuous current
l) Thermal current ____kA_____s
m) Mechanical peak current _____kA
n) Voltage drop
o) BIL

Copyright © 1997 IEEE All Rights Reserved

Copyright The Institute of Electrical and Electronics Engineers, Inc.
Provided by IHS under license with IEEE
No reproduction or networking permitted without license from IHS Not for Resale

p) Altitude
q) Number and year of specification
r) Number of this standard
s) Total weight

C.7.2 Optional information

Optional information that may be required as follows:

a) Discharge frequency
b) Q-Factor (at discharge frequency)
c) Number of phases
d) Drawing number
e) Customer ID number
f) Service; indoor, outdoor
g) Maximum ambient temperature
h) System voltage

Copyright © 1997 IEEE All Rights Reserved

Copyright The Institute of Electrical and Electronics Engineers, Inc.
Provided by IHS under license with IEEE
No reproduction or networking permitted without license from IHS Not for Resale

Annex D Construction and installation of dry-type air-core series reactors

(Informative)

D.1 General description

All parts of dry-type air-core series reactors are “live,” unlike oil-immersed reactors and transformers where the tank is grounded. The only external “live” parts of an oil-immersed reactor or transformer are the bushings.

Dry-Type air-core series reactors do not have an iron core. Therefore, the magnetic field is not constrained and will occupy the space around the dry-type air-core reactor. Although the magnetic field strength is reduced with increase in distance from the reactor, the presence of this field must be taken into consideration for the installation of dry-type air-core units. The extent to which care has to be taken is largely a function of kilovoltamperes and is lower for low kilovoltampere units.

In the following subclauses, application-related construction details and installation considerations will be discussed in order to provide guidance to the user of dry-type air-core series reactors.

D.2 Safety

Since dry-type air-core series reactors are not enclosed in a grounded tank, parts above the base support insulators must be treated as “live.” Therefore, in order to meet personnel safety requirements, the reactor shall be installed with clearances established by the National Electric Safety Code® (NESC®) (ASC C2, applicable edition). For transmission voltage class and distribution voltage class equipment, standard methods of achieving personnel clearance are the use of fencing and special support structures. In many cases, both methods are employed simultaneously. Distribution voltage class series reactors are also installed in cells fabricated from standard building materials or vendor supplied enclosures.

When fencing is employed, special care must be taken to ensure that the stray magnetic field of the series reactor does not induce high currents in metallic fencing components. All metallic fencing must be broken up into electrically isolated sections if it is located very near the reactor. It is also critical to ensure that all portions of a metallic fence are grounded because of the capacitive coupling that can exist between the reactor, which is at high potential, and the fence. Another alternative is to use nonmetallic fencing, e.g., wood or plastic.

If distribution class series reactors are mounted in cells fabricated from standard building materials, the use of rebar must be fully analyzed, preferably by the reactor supplier, to determine eddy current heating based temperature rise. Metallic structural members are also a concern. Standalone enclosures of steel or fiberglass are also employed for personnel protection. Care must be taken to sectionalize enclosure panels to avoid induced current heating and possible excessive mechanical loads during short-circuit duty. Grounding of panels must also be done in such a way as to avoid creation of closed loops. Reactor manufacturers can often provide specially designed enclosures to minimize enclosure size and ensure proper grounding, panel size, and isolation. Designs very often require sophisticated computer analyses backed by empirical data from in-service experience and short-circuit testing.

Special mounting structures can also be employed to provide safety clearance for substation personnel. Methods employed include fiberglass pedestals, braced aluminum and steel pedestals, special grounded metallic support pedestals, and reinforced concrete structures. The type of material (aluminum, mild steel, austenitic stainless steel) that can be employed is a function of magnetic field strength, field direction, structure geometry, and mechanical considerations. In the case of concrete structures, eddy current heating in rebar must be fully assessed and may necessitate the use of nonmetallic (fiberglass) or austenitic stainless steel reinforcing rods.

When employing dry-type air-core series reactors, care should be taken in the installation of the station ground grid in the vicinity of the reactors. The ground grid should be designed so as not to have shorted loops; otherwise, currents

Copyright © 1997 IEEE All Rights Reserved

Copyright The Institute of Electrical and Electronics Engineers, Inc.
Provided by IHS under license with IEEE
No reproduction or networking permitted without license from IHS Not for Resale

could be induced in the grid. Grounding of other ancillary support structures or equipment in the vicinity of the reactors should be accomplished without creating closed loops in the grounding system.

As a prudent safety precaution all grounding of reactor ancillary components, enclosure panels and frame, metallic fencing, ground grids, etc., should be inspected and tested on a regular schedule.

D.3 Site conditions

Site conditions should be taken into consideration in the application of dry-type air-core series reactors. It is preferable if unusual site conditions are made a part of the specification so that the reactor can be designed accordingly.

Pollution is an important factor. Many reactors are installed in industrial applications in utility applications or near to sources of industrial pollutants. Coastal installations are also critical; even for installation some distance inland. Salt pollution effects are a function of storm severity, direction of winds, and severity vs. frequency considerations. Mitigation techniques can include, in the case of the reactor, lower surface voltage stress, special track-resistant coatings such as room temperature vulcanizing silicone rubber (RTV) acid or caustic resistant paints, etc. Mounting insulators and bus support insulators may have to be high-creepage designs, may utilize RTV coating protection, or may require other techniques.

Ambient temperature at the point of installation is an important factor. Most specifications quote maximum ambient temperatures based on weather office data. However, more critical is temperature at the site, specifically the area of installation. The issue is not only solar radiation effects but also the temperature of the cooling air, which could be significantly higher than the air temperature in the shade. Nearby buildings, or walls erected around reactor installations, all can have an effect on the cooling air temperature and the air flow seen by the reactor. Although difficult to quantify, even a descriptive clarification in the reactor specification would be a very useful design aid.

D.4 Clearances: Electrical, ventilation, and magnetic

The clearance requirements are of three types: electrical, ventilation, and magnetic.

As the normal dry-type air-core series reactor has exposed live parts at essentially all points on its outer surface, provision must be made for electrical clearance from the reactor surface to nearby grounded surfaces and to the surface of other reactors in adjacent phases. Standard electrical clearances to live parts are perfectly adequate. No special precautions over and above normal substation practices are required.

Ventilation clearance requirements may vary somewhat depending on the reactor manufacturer. For instance, in the case of reactors employing vertical cooling ducts, provision must be made for the unimpeded entrance and exit of cooling air at the bottom and top of the cooling ducts, respectively. Generally, the ventilation clearance will be less than the magnetic clearance requirements and, as such, it will not prove to be a limiting factor when installing the unit. Irrespective of this fact, it is still important to recognize that there is a requirement for ventilation and the blockage of the cooling ducts with any foreign material, metallic or nonmetallic, or interference with normal convective air flow must be avoided.

Magnetic clearance requirements arise since dry-type air-core reactors have no iron core to capture the magnetic field. See Figure D.1.

Copyright © 1997 IEEE All Rights Reserved

Copyright The Institute of Electrical and Electronics Engineers, Inc.
Provided by IHS under license with IEEE
No reproduction or networking permitted without license from IHS Not for Resale

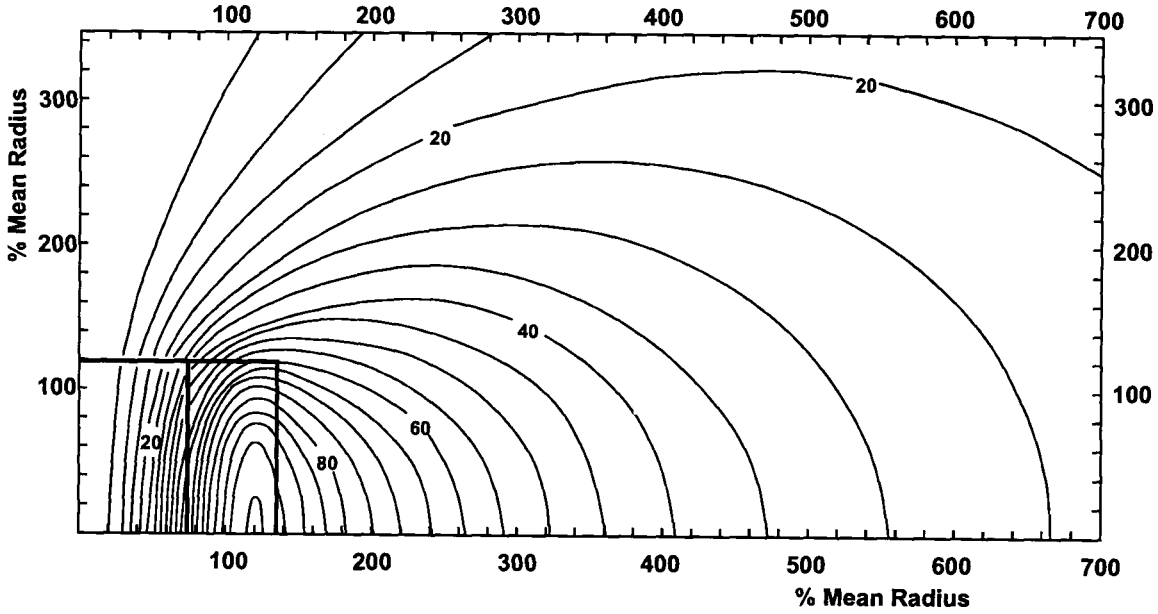

NOTES:

1 — Reactor center located at origin.

2 — Flux lines marked in percent of maximum flux.

3 — Horizontal and vertical axes are in percent of the mean radius of the reactor.

Figure D.1—Single quadrant plot of flux surrounding a typical reactor

These stray magnetic fields can induce currents in structural metallic parts that may give rise to serious heating under normal load conditions and to severe forces under short-circuit conditions. The induced currents are of two types, and, as such, they give rise to two types of clearance requirements.

a) Eddy currents caused by the local field give rise to a minimum clearance required to metallic parts that do not form closed loops.
b) Circulating current caused by coil flux linking a closed loop formed by a number of structural members lead to a minimum distance that must be maintained between the reactor and parts that form closed electrical loops.

A very common, albeit understandable, misconception, is the belief that these “magnetic clearances” apply to magnetic materials only, and not to other metallic but nonmagnetic parts. This is not true. While it is true that nonmagnetic materials such as aluminum may often be used in place of steel to reduce the severity of heating problems caused by stray reactor fields, it should be recognized that structural parts constructed of these materials will also carry sizable currents, experience heating due to the presence of the coil field, and perhaps have substantial forces impressed on them when the reactor carries short-circuit current. The only difference is that for some conditions the heating will be less severe when nonmagnetic, low-resistance materials are used.

The effect of the stray magnetic field shall be considered in the support structure design, as well as in the placement of auxiliary equipment such as circuit breakers, lightning arresters, etc. Additionally, any other required nearby structures shall be located in areas where the effect of the stray magnetic field will not create excessive heating. Figure D.2 illustrates conservative “rules of thumb” that will keep the end user out of trouble.

Copyright © 1997 IEEE All Rights Reserved

Copyright The Institute of Electrical and Electronics Engineers, Inc.
Provided by IHS under license with IEEE
No reproduction or networking permitted without license from IHS Not for Resale

As can be seen from Figure D.2, the clearance required to closed loops is approximately double that required for parts that do not form closed loops. For this reason, it is best, particularly in the case of new installations, to design the structural parts near the reactor in such a way as to avoid the formation of closed loops. For existing installations that are being modernized or upgraded, however, the generally troublesome structural parts, such as concrete reinforcing rods and building support beams, are already in place and as such it may not be possible to avoid the presence of closed loops. In this case, the required reactors may still be fit into the desired space even if the general magnetic clearance requirements shown in Figure D.2 are not satisfied. This may often be accomplished simply by performing a detailed magnetic clearance analysis to confirm that the guidelines may be reduced for the specific case in question. In more difficult cases, the use of appropriate materials, geometries, and shielding may provide the necessary reduction in clearance requirements.

If insulators and associated support structure are supplied with the reactor, it is desirable that they be of sufficient height to provide the required magnetic clearance to the foundation on which the reactor is to be mounted. Sufficient information regarding metallic parts below the reactor (rebar, structures, ground grids) shall be provided by the purchaser to the manufacturer.

D.5 Mechanical considerations

Depending on the scope of supply, special attention should be given, by either the manufacturer or purchaser, to the interactive electromagnetic forces between stacked reactors, between reactors installed close to each other, between the reactor and current-carrying auxiliary parts (such as buswork), and between the reactor and bus or cable connections to the reactor. Support structure and bracing elements shall be designed to resist the resultant loads.

As standard practice, unless otherwise specified, peak wind loads and electromagnetic forces created by a simultaneous three-phase fault (again, unless otherwise specified) are assumed to occur simultaneously. Seismic loads or other specified loading are typically assumed to act on a noncoincidental basis.

Reactors should be designed to facilitate lifting and should be provided with lifting eyes or similar devices to allow safe, rapid installation. Lifting and handling instructions should be clear and readily available. In the case of very heavy reactors, special crating and transport precautions may have to be taken to keep stresses in the reactor at safe levels. Likewise, special lifting devices and procedures may have to be employed.

D.6 Concrete foundation and mounting

Foundation and mounting requirements are a function of the rating and hence mass of the reactor. Many low kilovoltampere units (≤1 MVA) are mounted indoors with no special precautions other than magnetic clearance considerations. Larger units mounted indoors may require the use of vibration isolators. For large units mounted outdoors, one basic rule of thumb that should be considered, as with the mounting of any large piece of equipment, is to keep the foundation at least two or three times the mass of the object mounted on it. This will ensure there are absolutely no ground vibration based noise problems in the field. If bedrock at the site is very near the surface or soil conditions warrant, a less massive foundation can be used.

Generally for dry-type air-core series reactors, the other critical foundation or floor design criterion is to ensure that the stray magnetic field of the reactor does not create excessive heating in the reinforcing material. In most cases, for outdoor mounted units the distribution of the coil mass on the concrete base results in the concrete being very lightly loaded. Therefore, rebar may not be necessary. If rebar is necessary, nonmetallic or stainless steel rebar would eliminate potential eddy heating problems. Also, where metallic rebar is used, the crossover points should be electrically isolated to prevent closed loops. Pieces of hose slipped over the rebar at the crossover would be sufficient. If clearances greater than the coil diameter are used below the reactor, then precautions of isolating the rebar to prevent shorted loops and selecting stainless steel or non-metallic materials may not be necessary.

Copyright © 1997 IEEE All Rights Reserved

Copyright The Institute of Electrical and Electronics Engineers, Inc.
Provided by IHS under license with IEEE
No reproduction or networking permitted without license from IHS Not for Resale

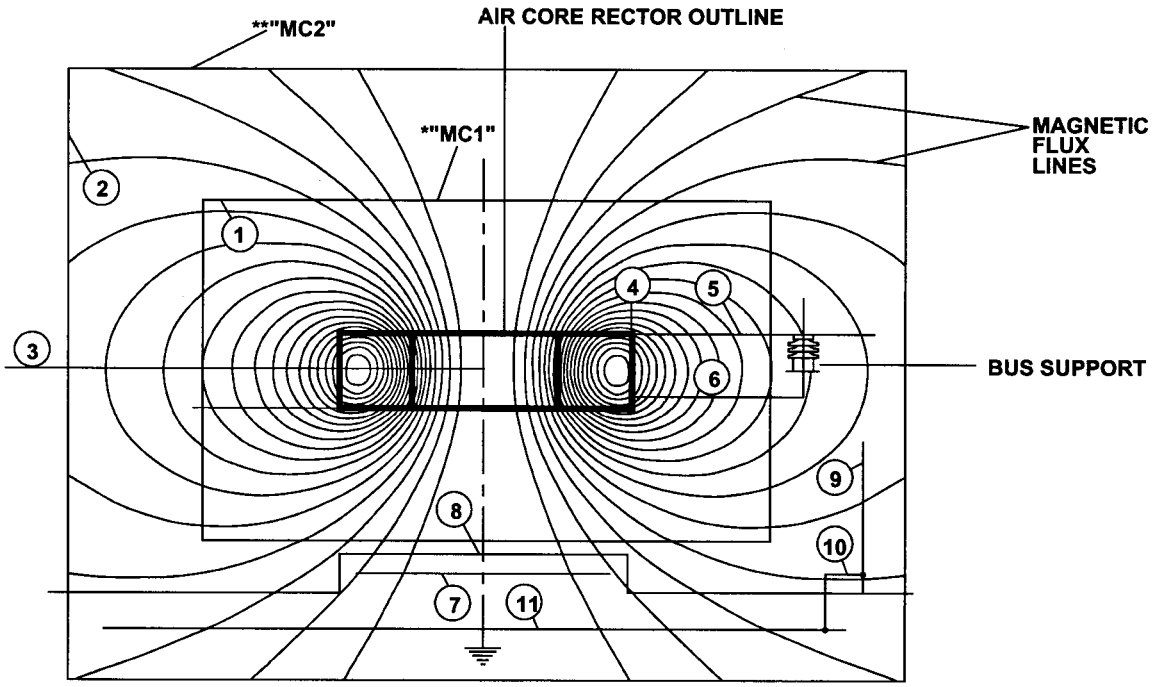

1) Keep small metallic parts not forming closed loops outside "MC1"*.
2) Keep large metallic geometries or closed loops outside "MC2"†.
3) Keep spacing requirements to neighboring reactors to avoid:
   a) Unacceptable mutual influence on inductance;
   b) Inadmissible electrodynamic forces acting between adjacent reactors during maximum short-time current.
4) Use adequate connectors having geometries not providing too large a frontal area to the magnetic field in order to minimize eddy heating.
5) Select adequate connection bars or cable with respect to eddy heating and align them in radial direction from the reactor terminal.
6) Provide connection bus bar or cable/bus supports close to the reactor to relieve the reactor terminals of undue mechanical loads.
7) Insulate crossover points of rebar.
8) Provide even and level foundation plane.
9) Partition metallic fencing erected in the reactor vicinity into electrically insulated sections that are individually grounded.
10) Do not form shorted loops when grounding the fence sections.
11) Avoid shorted loops in the station ground grid.

*"MC1" Magnetic clearance contour: 1/2 coil outer diameter from all surfaces of the reactor.

†"MC2" Magnetic clearance contour: 1 coil outer diameter from all surfaces of the reactor.

Figure D.2—Installation guidance—Summary (basic rules)

The final major consideration is the anchoring system used to secure the coil support structure to the concrete base. The anchors must be located deep enough in the concrete and be designed to resist the overturning load imposed on the coil and its structure due to wind loading, short-circuit forces or seismic excitation. This is most important for reactors located on top of tall support structures (e.g., fiberglass pedestals) to give required clearance for station personnel. Again, the manufacturer of dry-type air-core series reactors is the best source of definitive information.

One unique aspect of high-voltage reactors is that the structure required underneath the reactor both for voltage and personnel clearance usually results in low levels of magnetic field at the foundation, and thus the foundation may

Copyright © 1997 IEEE All Rights Reserved

Copyright The Institute of Electrical and Electronics Engineers, Inc.
Provided by IHS under license with IEEE
No reproduction or networking permitted without license from IHS
Not for Resale

typically be built using standard methods. However, to ensure there are no problems, the manufacturer of the reactor should conduct a detailed analysis.

D.7 Connections

In the case of low kilovoltampere rated units, the only consideration regarding connections is that of ampacity and desired terminal temperature rise. However, because of the very intense magnetic fields that exist close to large megavoltampere dry-type air-core reactors, special care should be taken in designing terminals, connectors and connections to the system. Terminals should be streamlined to the magnetic field in order to minimize eddy current heating. Connectors employed should also follow the same criteria. Since eddy losses are proportional to the geometry to the fourth power, it is preferable to use stranded cable instead of solid bus bar for making system connections to the reactors. However, solid bus bar can be used provided increased ampacity is employed to compensate for the eddy heating. It is also of benefit if the bus bar is rectangular and is oriented in such a direction that the coil's magnetic field impinges at the direction of its narrowest section. It should be stressed, however, that short-circuit forces on connections must be iterated into the selection process.

D.8 Auxiliary protection

Modern, dry-type air-core reactors can be designed to meet any system BIL requirement. It should be pointed out that BIL requirements normally are based on switching or standard lightning impulse conditions. In modern power systems, it is possible that reactors can be subjected to very fast rising transient overvoltages. If these are known about in advance, they can be considered in the design of the reactor. However, in many cases, it is hard to predict the rate of rise or the magnitude of such transients and, in these cases, auxiliary protection may be advisable. Any such decision should be based on in-depth discussions with the reactor manufacturer and detailed systems analysis.

D.9 Switching: Circuit breakers

Circuit breakers are normally utilized to switch the circuits of which series reactors are a component. The two things that must be considered are the effect of the switching operation on the insulation system of the dry-type air-core series reactor, and the transient recovery voltage of the circuit breaker. Detailed high-frequency coupled circuit models developed for dry-type air-core series reactors allow proper analysis of most situations. Therefore, the insulation system of the reactor can be designed appropriately, the proper breaker selected, or the high-frequency characteristic of the reactor may be modified to reduce breaker TRV.

Copyright © 1997 IEEE All Rights Reserved

Copyright The Institute of Electrical and Electronics Engineers, Inc.
Provided by IHS under license with IEEE
No reproduction or networking permitted without license from IHS Not for Resale

Annex E Bibliography

(Informative)

[B1] Braunovic, M., "Effect of contact aid compounds on the performance of bolted aluminum-to-aluminum joints under load cycling conditions," *IEEE Transactions on Components, Hybrids and Manufacturing Technology*, vol. CHMT-9, no. 1, pp. 59–70, Mar. 1986.

[B2] Braunovic, M., "Evaluation of different platings for aluminum-to-copper connections;" Electrical Contacts—1991. *Proceedings of the 34th IEEE/HOLM Conference on Electrical Contacts*, Chicago, Ill., pp. 249–260, Oct. 1991.

[B3] Braunovic, M., "Evaluation of different types of contact air compounds for aluminum-to-copper connections," Electrical Contacts—1990. *Proceedings of the 15th Conference on Electrical Contacts*, Montreal, Quebec, Canada, pp. 509–517, Aug. 1990.

[B4] Deutsch, F., "Measuring the Active Power Losses of Large Reactors," *Brown Boveri Review*, vol. 47, pp. 268–278, Apr. 1960.

[B5] Hemmes, R. T. and Graham, D. C., "Measurement of self-cooled transformer sound levels in relatively high ambients," *IEEE Transactions on Power Apparatus and Systems*, vol. PAS-89, pp. 1657–1662, Sept./Oct. 1970.

[B6] Jackson, R. L., "Significance of surface preparation for bolted aluminum joints," *IEE Proceedings, C, General Transmission and Distribution*, vol. 128, pp. 45–54, Mar. 1981.

[B7] Kusters, N. L. and Petersons, O. A., "Transformer-ratio-arm bridge for high voltage capacitance measurements," *IEEE Transactions (Communications and Electronics)*, vol. 68, pp. 606–611, Nov. 1963.

[B8] Malewski, R., Anderson, W.E., and Moore, W. J. M., "Interlaboratory comparison of EHV shunt reactor loss measurements," *IEEE Transactions on Power Apparatus and Systems*, vol. PAS-99, no. 4, July/Aug. 1980.

[B9] Malewski, R., Arseneau, R., and So, E., "A comparison of instrumentation for measuring the losses of large power transformers," *IEEE Transactions on Power Apparatus and Systems*, vol. PAS-102, No. 6, pp. 1570–1573, June 1983.

[B10] Moore, W. J. M., "A technique for calibrating power frequency wattmeters at very low power factors," *IEEE Transactions on Instrumentation and Measurement*, vol. IM-23, no. 4, pp. 318–322, Dec. 1974.

[B11] Moore, W. J. M. and Raftis, F. A., "Measurement of shunt reactor loss at high voltage with an alternating current comparator bridge," *IEEE Transactions on Power Apparatus and Systems*, vol. PAS-92, no. 2, pp. 662–667, Mar./Apr. 1973.

[B12] Petersons, O. A., "Transformer-ratio-arm bridge for measuring large capacitors above 100 volts," *IEEE Transactions on Power Apparatus and Systems*, vol. PAS-87, pp. 1354–1361, May 1968.

Copyright © 1997 IEEE All Rights Reserved

--`,,`,,`-`-`,,`,,`,`,,`---

Copyright The Institute of Electrical and Electronics Engineers, Inc.
Provided by IHS under license with IEEE
No reproduction or networking permitted without license from IHS Not for Resale