An American National Standard

IEEE Standard Test Procedure for Thermal Evaluation of Insulation Systems for Ventilated Dry-Type Power and Distribution Transformers

Sponsor

Transformers Committee of the
IEEE Power Engineering Society

Secretariat

Institute of Electrical and Electronics Engineers
National Electrical Manufacturers Association

Approved December 17, 1981

IEEE Standards Board

Approved August 27, 1984

American National Standards Institute

© Copyright 1986

The Institute of Electrical and Electronics Engineers, Inc.
345 East 47th Street, New York, NY 10017, USA

No part of this publication may be reproduced in any form, in an electronic retrieval system or otherwise, without the prior written permission of the publisher.

Copyright The Institute of Electrical and Electronics Engineers, Inc.
Provided by IHS under license with IEEE
No reproduction or networking permitted without license from IHS

Not for Resale

IEEE Standards documents are developed within the Technical Committees of the IEEE Societies and the Standards Coordinating Committees of the IEEE Standards Board. Members of the committees serve voluntarily and without compensation. They are not necessarily members of the Institute. The standards developed within IEEE represent a consensus of the broad expertise on the subject within the Institute as well as those activities outside of IEEE that have expressed an interest in participating in the development of the standard.

Use of an IEEE Standard is wholly voluntary. The existence of an IEEE Standard does not imply that there are no other ways to produce, test, measure, purchase, market, or provide other goods and services related to the scope of the IEEE Standard. Furthermore, the viewpoint expressed at the time a standard is approved and issued is subject to change brought about through developments in the state of the art and comments received from users of the standards. Every IEEE Standard is subjected to review at least every five years for revision or reaffirmation. When a document is more than five years old and has not been reaffirmed, it is reasonable to conclude that its contents, although still of some value, do not wholly reflect the present state of the art. Users are cautioned to check to determine that they have the latest edition of any IEEE Standard.

Comments for revision of IEEE Standards are welcome from any interested party, regardless of membership affiliation with IEEE. Suggestions for changes in documents should be in the form of a proposed change of text, together with appropriate supporting comments.

Interpretations: Occasionally questions may arise regarding the meaning of portions of standards as they relate to specific applications. When the need for interpretations is brought to the attention of IEEE, the Institute will initiate action to prepare appropriate responses. Since IEEE Standards represent a consensus of all concerned interests, it is important to ensure that any interpretation has also received the concurrence of a balance of interests. For this reason IEEE and the members of its technical committees are not able to provide an instant response to interpretation requests except in those cases where the matter has previously received formal consideration.

Comments on standards and requests for interpretations should be addressed to:

Secretary, IEEE Standards Board
345 East 47th Street
New York, NY 10017
USA

Copyright The Institute of Electrical and Electronics Engineers, Inc.
Provided by IHS under license with IEEE
No reproduction or networking permitted without license from IHS
Not for Resale

Foreword

(This Foreword is not a part of ANSI/IEEE C57.12.56-1986, IEEE Standard Test Procedure for Thermal Evaluation of Insulation Systems for Ventilated Dry-Type Power and Distribution Transformers.)

This standard was developed to provide a method for evaluating insulation systems for ventilated dry-type transformers with high-voltage ratings greater than 600 V. Since the procedures contained herein are new, experience factors may require future revision.

The working group that developed this standard used AIEE 65-1956, the Proposed Test for Thermal Evaluation of Ventilated Dry-Type Power and Distribution Transformers, as a starting point. New materials and coil-design techniques necessitated a revision of the procedure to recognize such factors as layer insulation, higher impulse withstand capabilities, and new organic, high-temperature insulations. This standard describes methods that take the new materials and processes into account.

The working group was unable to define an existing insulation system to use as a control for comparison with an insulation system under test; therefore, an arbitrary extrapolation criteria of 40 000 h was selected for the evaluation. The working group urges the Dry-Type Transformer Industry to report results of tests using this standard to provide a basis for future improvement.

The working group considered aging under voltage stresses which might cause partial discharge but ruled it out since present transformer designs are generally made to be as free of partial discharges as practical.

The working group considered a vibration and shock procedure as one of the aging factors. So little information is published regarding the effects of vibration and shock in high-voltage insulation systems that it was impossible to include it in this standard. The working group urges the industry to report procedures and results of testing insulation systems with vibration and shock so that revisions of this standard may incorporate these factors, if they are found to be significant.

This standard relates voltage withstand end-point criteria to the impulse voltage distribution within the coil or to the initial-voltage withstand of the coil. A relationship between impulse withstand of the insulation and short-term 60 Hz withstand is identified so that 50/60 Hz testing of model coils is possible.

Acknowledgement and thanks are extended to those who have so freely given their time and knowledge and have conducted experimental work on which this standard is based.

This standard was developed by a working group of the Dry-Type Transformer Subcommittee of the IEEE Transformer Committee of the IEEE Power Engineering Society.

At the time it approved this standard, the C57 Committee had the following membership:

R. E. Uptegraff, Jr, *Chair*
R.E. Ensign, *Vice Chair*
R. G. Hansen, *Secretary*

Organization Represented	*Name of Representative*
Bonneville Power Administration	Vacant
Electric Light and Power Group	N. Derwianka
	R. L. Ensign
	I. H. Koponen
	B. F. Smith
	E. F. Villasuso, Jr
	J. P. Markery *(Alt)*
Institute of Electrical and Electronics Engineers	J. V. Bonucchi

--`,,`-`-`,,`,,`,`,,`---
Copyright The Institute of Electrical and Electronics Engineers, Inc.
Provided by IHS under license with IEEE
No reproduction or networking permitted without license from IHS
Not for Resale

	O. Compton
	J. C. Dutton
	L. W. Long
	L. S. McCormick
	W. J. Neiswender
	B. Stanleigh *(Alt)*
National Electrical Manufacturers Association	J. D. Douglass
	W. C. Kendall
	K. R. Linsley
	W. J. McNutt
	H. Robin
	M. Sampah
	R. E. Uptegraff, Jr
	R. J. Stahara *(Alt)*
Naval Facilities Engineering Command	H. P. Stickley
Rural Electrification Administration	J. C. Arnold, Jr
Tennessee Valley Authority	L. R. Smith
Underwriters Laboratories	T. O'Grady
	R. W. Seelbach *(Alt)*
Water and Power Resources Service	F. W. Cook, Sr
Western Area Power Administration	D. R. Torgerson

The personnel of the working group at the time of completion of this standard were as follows:

G. H. Bowers, *Chair*

B. F. Allen	E. J. Huber	M.L. Manning
G. M. Bell	A.D. Kline	N.J. Melton
F. J. Brütt		A.C. Wurdack

When the IEEE Standards Board approved this standard on December 17, 1981, it had the following membership:

I. N. Howell, Jr, *Chair*
Irving Kolodny, *Vice Chair*
Sava I. Sherr, *Secretary*

G. Y. R. Allen	Loering M. Johnson	Virginius N. Vaughan, Jr
Jay Forster	Jay A. Stewart	Edward J. Cohen
Frank Rosa	John T. Boettger	Donald T. Michael *
J. J. Archambault	Joseph L. Koepfinger	Art Wall
Kurt Greene	William E. Vannah	Len S. Corey
Robert W. Seelbach	Edward Chelotti	John P. Riganati
James H. Beall	John E. May	Robert E. Weiler

* Member emeritus

Copyright The Institute of Electrical and Electronics Engineers, Inc.
Provided by IHS under license with IEEE
No reproduction or networking permitted without license from IHS
Not for Resale

CLAUSE PAGE

1. Introduction 1

1.1 Scope 1
1.2 Purpose 1
1.3 References 1
1.4 Applicable Document in Preparation 2

2. Basic Considerations 2

2.1 General 2
2.2 Intent 2
2.3 Aging Factors 2
2.4 Data Treatment 3

3. Test Procedures 3

3.1 General 3
3.2 Test Models 4
3.3 Screening 7
3.4 Test Cycles 8
3.5 Temperature Aging 8
3.6 Humidity Conditioning 9
3.7 Dielectric Tests 9

4. Reporting 12

Annex A (informative) 13

Annex B (informative) 15

Copyright The Institute of Electrical and Electronics Engineers, Inc.
Provided by IHS under license with IEEE
No reproduction or networking permitted without license from IHS
Not for Resale

--`,-`-`,,`,,`,`,,`---

Copyright The Institute of Electrical and Electronics Engineers, Inc.
Provided by IHS under license with IEEE
No reproduction or networking permitted without license from IHS

Not for Resale

An American National Standard

IEEE Standard Test Procedure for Thermal Evaluation of Insulation Systems for Ventilated Dry-Type Power and Distribution Transformers

1. Introduction

1.1 Scope

This standard is intended to establish a uniform method for determining the temperature classification of ventilated dry-type power and distribution transformer insulation systems by test rather than by chemical composition.

These insulation systems are intended for use in transformers listed in ANSI C57.12.50-1981 [1][1] and ANSI C57.12.51-1981 [2], and whose highest voltages exceed nominal 600 V.

NOTE — In this standard, the term *transformer* shall be considered to mean *ventilated dry-type transformer* unless qualified by other descriptive terms.

1.2 Purpose

The purpose of this standard is to establish a uniform method

1) For providing data for selection of the temperature classification of the insulation system
2) For providing data which may be used as a basis for a loading guide
3) For comparative evaluation of different insulation systems

1.3 References

[1] ANSI C57.12.50-1981, American National standard Ventilated Dry-Type Distribution Transformers, 1 to 500 kVA, Single-Phase, and 15 to 500 kVA, Three-Phase, with High-Voltage 601 to 34 500 Volts, Low-Voltage 120 to 600 Volts[2]

[2] ANSI C57.12.51-1981, American National Standard Requirements for Ventilated Dry-Type Power Transformers, 501 kVA and Larger, Three-Phase with High-Voltage 601 to 34 500 Volts, Low-Voltage 208Y/120 to 4160 Volts.

[3] ANSI/ASTM D149-81, Standard Test Methods for Dielectric Breakdown Voltage and Dielectric Strength of Electrical Insulating Materials at Commercial Power Frequencies.

[1]The numbers in brackets correspond to those of the references listed in 1.3.
[2]ANSI publications are available from the Sales Department, American National Standards Institute, 1430 Broadway, New York, NY 10018.

Copyright © 1986 IEEE All Rights Reserved

Copyright The Institute of Electrical and Electronics Engineers, Inc.
Provided by IHS under license with IEEE
No reproduction or networking permitted without license from IHS
Not for Resale

[4] ANSI/IEEE C57.98-1986, IEEE Guide for Transformer Impulse Tests.

[5] ANSI/IEEE Std 4-1978, IEEE Standard Techniques for High-Voltage Testing.

[6] ASTM E104-51 (R1971), Standard Recommended Practice for Maintaining Constant Relative Humidity by Means of Aqueous Solutions.[3]

[7] IEEE Std 1-1969, IEEE General Principles for Temperature Limits in the Rating of Electric Equipment.[4]

[8] IEEE Std 101-1972, IEEE Guide for the Statistical Analysis of Thermal Life Test Data.

[9] IEEE Std 101A-1974, Simplified Method for Calculation of the Regression Line (Appendix to IEEE Guide for the Statistical Analysis of Thermal Life Test Data, IEEE Std 101-1972).

[10] MANNING, M. L. The Electrical Insulation Challenge for Dry-Type Transformers. *Insulation/ Circuits,* Sept 1973, vol 19, no 10, pp 87-92.

1.4 Applicable Document in Preparation[5]

2. Basic Considerations

2.1 General

Two test methods are developed to provide a means for evaluating insulation systems as a function of thermal aging and are an extension of AIEE 65-1956,[6] Thermal Evaluation of Ventilated Dry-Type Power and Distribution Transformers.

One method is based on retention of a dielectric withstand voltage equal to a percentage of the initial 50/60 Hz dielectric withstand c capability of the test sample.

The second method is based on the retention of the basic impulse insulation level[7] by impulse testing, or by related [10] 50/60 Hz voltage withstand capability tests on models. See 3.7.

2.2 Intent

The intent of these test methods is to have each component of the insulation system tested under conditions that are as nearly as possible the same as those in the actual transformer. Thus, each of the components is evaluated in accordance with its actual function.

2.3 Aging Factors

The primary aging factors shall be temperature and time. Although the primary aging factors are temperature and time, the criterion of failure of these high-voltage insulation systems is assumed to be voltage related to the initial dielectric strength or to the rated basic impulse voltage level. Therefore, the time to failure of the system is determined during the

[3]ASTM publications are available from the American Society for Testing and Materials, 1916 Race St, Philadelphia, PA 19103.
[4]IEEE publications are available from the Institute of Electrical and Electronics Engineers, Service Center, 445 Hoes Lane, Piscataway, NJ 08854.
[5]When the following document is completed, approved, and published, it will become a part of this listing. IEEE Standards Project P745 (in preparation), Guide for Conducting a Transient Analysis for Dry-Type Transformers.
[6]AIEE 65-1956 was issued for trial use and may be used for general information.
[7]Impulse tests are simulated in this method since transient response of models generally is not representative of that found in full size transformers.

 Copyright © 1986 IEEE All Rights Reserved

Copyright The Institute of Electrical and Electronics Engineers, Inc.
Provided by IHS under license with IEEE
No reproduction or networking permitted without license from IHS Not for Resale

accelerated thermal aging by its ability to withstand prescribed proof test voltages applied after each thermal aging cycle. See 3.7.

The Arrhenius relationship is the theoretical basis for this standard. Insulating systems which contain a large percentage of inorganic material may not lend themselves to complete thermal evaluation by techniques based on the Arrhenius relationship.

Test methods specified in this test procedure are of an accelerated nature. Hence, an Arrhenius extrapolation of the time to failure obtained at the test temperatures (log of life versus 1/absolute temperature) is required to obtain the temperature classification for normal operation. As the conditions of this accelerated testing are unusually severe, extrapolation of the data will indicate a shorter time to failure than will be obtained in actual service use. Due to the lack of a universally accepted standard transformer insulation system, it is not possible to compare insulation systems with a standard system by way of the Arrhenius approach. It is expected that with the extended use of this test procedure such a comparison can be made. Until then, a reference time of 40 000 h to failure shall be used as a minimum acceptable basis for establishing a temperature classification. See 4.1(3)(d).

2.4 Data Treatment

To ensure that valid results are obtained, free of bias and suitable for comparative studies, the test data shall be reduced statistically and the results reported according to Section 4.

Tests shall be carried out in accordance with Method I described in 3.1.1 except that Method 2 described in 3.1.2 may be used where applicable.

Extrapolations indicated in Section 4 shall be applied only for failures occurring in the same part of the insulating system. If failures occur in more than one part of the system, data for each mode of failure shall be treated separately. Similarly, the temperature classification shall be determined by separate extrapolation for each mode of failure and the lowest extrapolated temperature obtained shah be used as representing the temperature rating for the complete system.

3. Test Procedures

3.1 General

3.1.1 Method 1

This method shall be used when complete information is not available regarding thermal degradation characteristics of the insulating system involved. At least three samples, in addition to samples used for temperature monitoring, shah be tested at each of three (or more) different temperatures. Suggested temperatures are given in Table 1. Details of model construction and test procedure are given in 3.2 through 3.7.

Table 1— Temperature and Exposure Time Guide

Estimated Time/Cycle	Hottest-Spot Temperature (°C) or Equivalent for System Expected to Operate At					
Hours|Temperature Class	105	130	150	185	220	250
300	135	165	195	225	275	310
100	150	180	215	245	300	340
35	165	200	235	270	325	375

Copyright © 1986 IEEE All Rights Reserved

Copyright The Institute of Electrical and Electronics Engineers, Inc.
Provided by IHS under license with IEEE
No reproduction or networking permitted without license from IHS
Not for Resale

3.1.2 Method 2

This method is applicable when the thermal degradation characteristics are known to be expressible by the following adaptation of the Arrhenius rate equation:

$$L = A(2.718)^{b/T} \quad (1)$$

where

L = time to failure, h
A = a constant representing the intercept of the *life* line of the Arrhenius plot with its ordinate
b = rate factor in the time-to-failure-temperature relationship dependent on insulation system involved, representing the slope of the Arrhenius plot
T = absolute temperature

in which A and b are known from previous tests performed in accordance with 3.1.1, Method 1. In this case, only one group of samples (n = samples) needs to be tested at one temperature value T_2 (K). Extrapolation may be carried out by Eq 2:

$$T_1 = \frac{b}{\ln(L_1/\bar{L}_2) + (b/T_2)} \quad (2)$$

where

T_1 = temperature limit, K (°C + 273) to give time-to-failure expectancy equal to or greater than L_1 (L_1 = 40 000 h).
ln = natural logarithm to the base e = 2.718
$\bar{L}_2$ = average value of time to failure at test temperature T_2. It is expressed in the same units as L_1.
L_2 = measured time to failure (see 3.5) obtained on samples at the test temperature and used to calculate L_2 per Eq 3

$$\bar{L}_2 = \frac{L_{2(1)} + L_{2(2)} + L_{2(3)} + \ldots L_{2(n)}}{n} \quad (3)$$

where

n = number of samples at temperature T_2

3.2 Test Models

Test models may be actual transformers modified to permit testing of possible modes of failure or shall be constructed as follows:

1) All models shall be constructed to simulate the winding design they represent with regard to the arrangements of components. Coils, supporting insulation, minimum air clearances, and varnish treatment shall be those used in the full-sized transformers represented by the models.
2) The winding segments of the models shall be arranged so as to permit dielectric tests for the various modes of failure, such as turn-to-turn, section-to-section, layer-to-layer, winding-to-winding, and winding-to-ground. The use of bifilar windings is suggested for the turn-to-turn configuration.
3) Some suggested model constructions are shown in Figs 1, 2, and 3.

Copyright © 1986 IEEE All Rights Reserved

Copyright The Institute of Electrical and Electronics Engineers, Inc.
Provided by IHS under license with IEEE
No reproduction or networking permitted without license from IHS Not for Resale

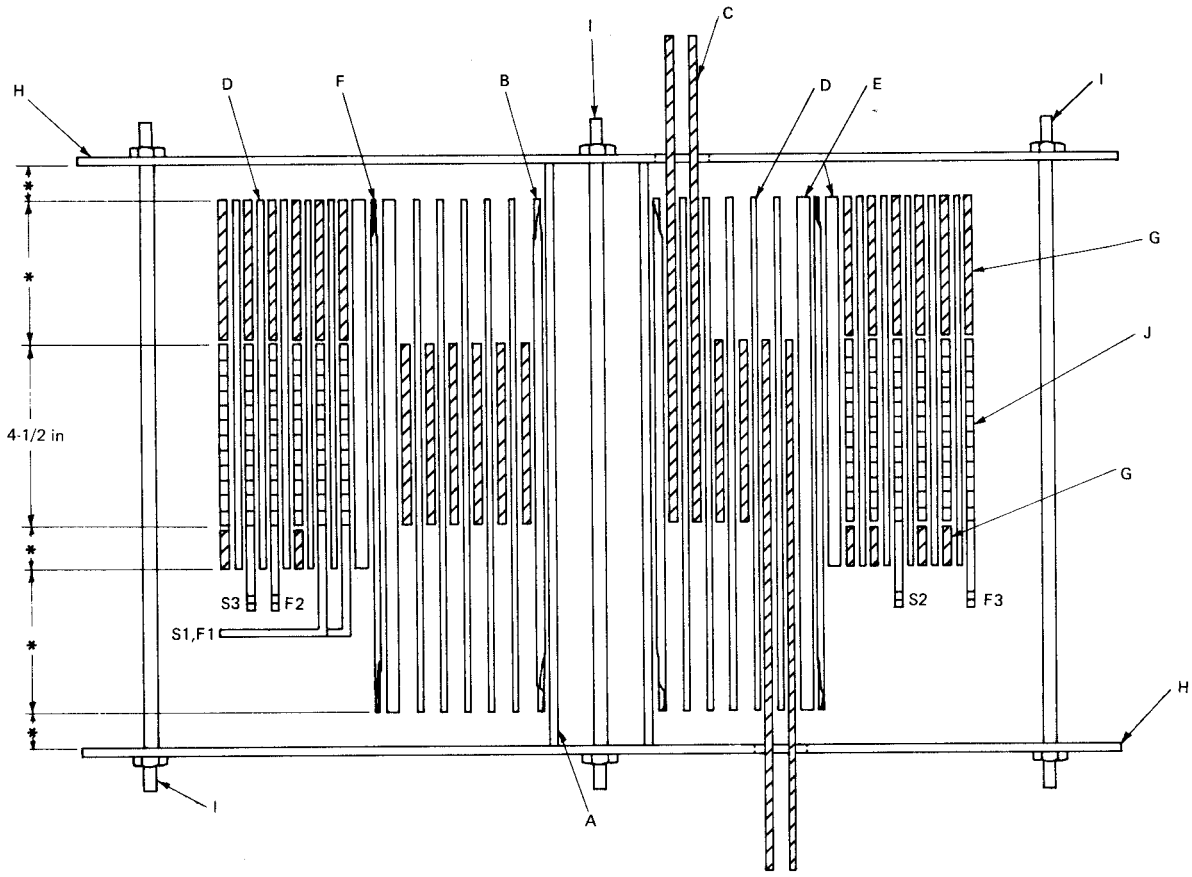

* TO SUIT DESIGN

A WINDING FORM (3 in SQUARE)
B INSULATION SEPARATING WINDING FROM WINDING FORM
C TWO-TURN, LOW-VOLTAGE INTERWOUND
D LAYER INSULATION
E DUCT
F INSULATION SEPARATING LOW-VOLTAGE WINDING FROM HIGH-VOLTAGE WINDING
G END FILL
H METAL CLAMPING PLATES
I THREE-EIGHTH CLAMPING STUDS
J INTERWOUND HIGH-VOLTAGE (THREE, TWO-LAYER SECTIONS)

Figure 1— Side View of Model Containing Barrel (Helical Winding) Wound High Side and Strip Wound Low Side

Copyright © 1986 IEEE All Rights Reserved

Copyright The Institute of Electrical and Electronics Engineers, Inc.
Provided by IHS under license with IEEE
No reproduction or networking permitted without license from IHS
Not for Resale

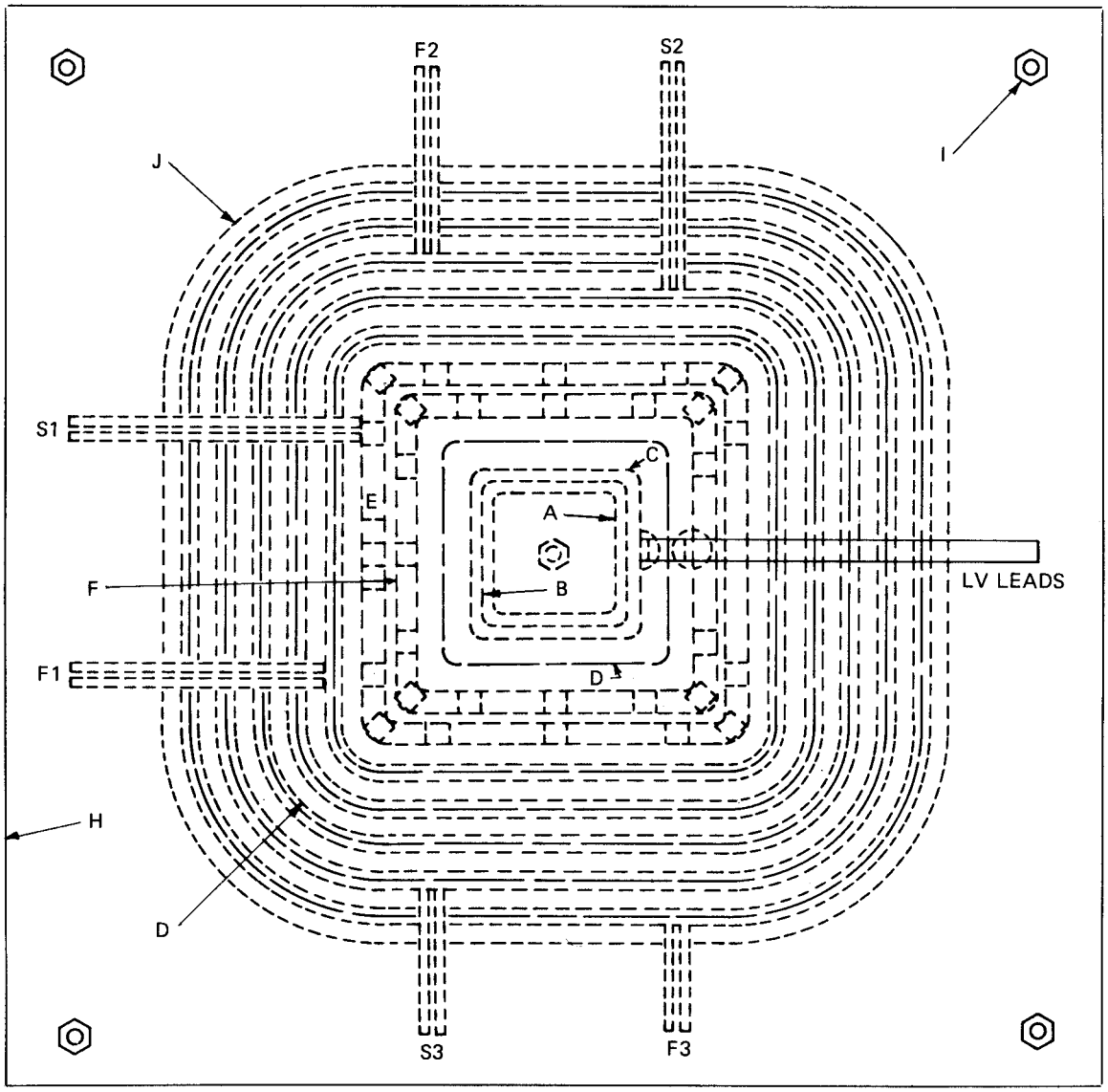

* TO SUIT DESIGN

A WINDING FORM (3 in SQUARE)
B INSULATION SEPARATING WINDING FROM WINDING FORM
C TWO-TURN, LOW-VOLTAGE INTERWOUND
D LAYER INSULATION
E DUCT
F INSULATION SEPARATING LOW-VOLTAGE WINDING FROM HIGH-VOLTAGE WINDING
G END FILL
H METAL CLAMPING PLATES
I THREE-EIGHTH CLAMPING STUDS
J INTERWOUND HIGH-VOLTAGE (THREE, TWO-LAYER SECTIONS)

Figure 2— Top View of Model Containing Barrel (Helical Winding) Wound High Side and Strip Wound Low Side

Copyright © 1986 IEEE All Rights Reserved

Copyright The Institute of Electrical and Electronics Engineers, Inc.
Provided by IHS under license with IEEE
No reproduction or networking permitted without license from IHS
Not for Resale

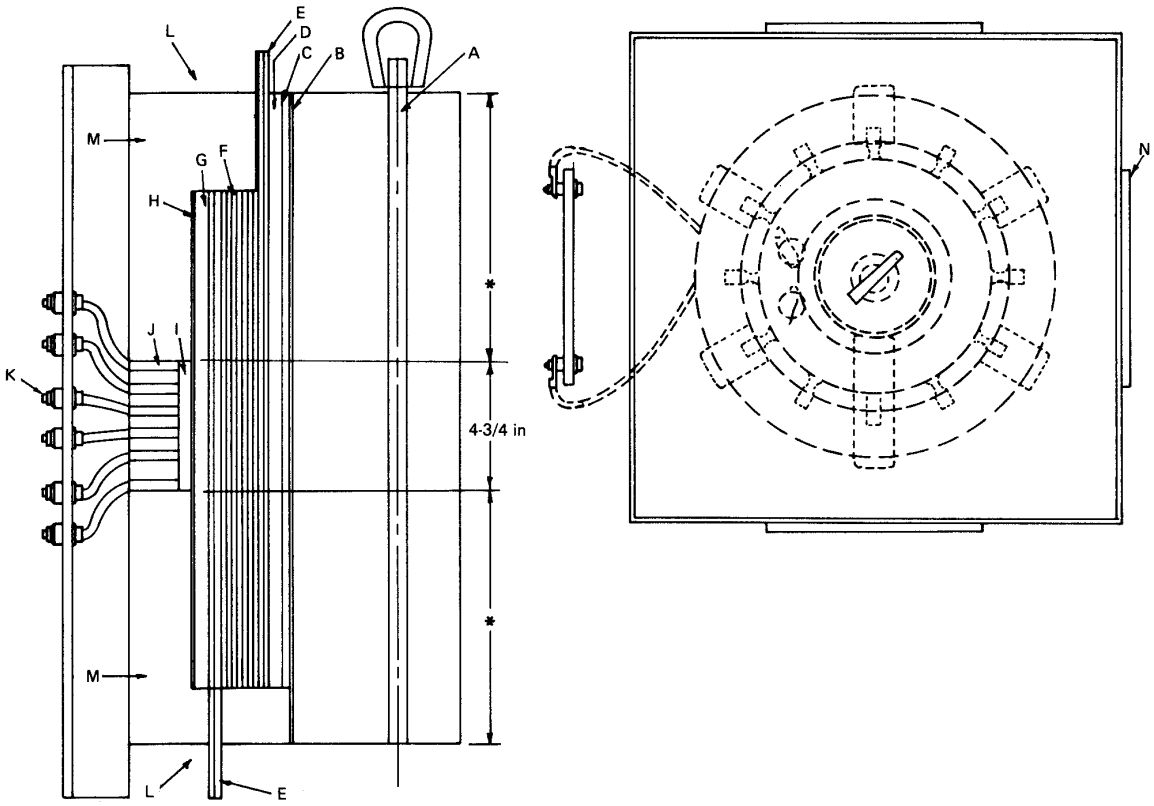

A ½ in CLAMPING STUD
B LOW-VOLTAGE WINDING FORM (4½ in DIAMETER)
C LOW-VOLTAGE TO GROUND INSULATION
D DUCT
E LOW-VOLTAGE WINDING FOIL OR STRIP BIFILAR WOUND
F INTERTURN OR LAYER INSULATION, OR BOTH
G DUCT
H HIGH-VOLTAGE TO LOW-VOLTAGE INSULATING BARRIER
I DUCT
J HIGH-VOLTAGE WINDING BIFILAR WOUND
K HIGH-VOLTAGE TERMINAL CONNECTIONS
L METAL CLAMPING PLATES
M COIL SUPPORTING BLOCKS
N TIE PLATES—INSULATION

Figure 3— Model for Pancake or Disc Wound High-Voltage Side and Strip Wound Low Side

3.3 Screening

Prior to exposure to an elevated temperature on the first test cycle, dielectric screening tests shall be made on all samples (see 3.7). The initial screening tests shall be made in accordance with 3.4 (2) and (3). Samples not passed in the screening test shall not be used.

Copyright © 1986 IEEE All Rights Reserved

Copyright The Institute of Electrical and Electronics Engineers, Inc.
Provided by IHS under license with IEEE
No reproduction or networking permitted without license from IHS
Not for Resale

3.4 Test Cycles

The test procedure shall consist of subjecting the test samples to repeated test cycles following an initial screening test. Each test cycle shall consist of the following parts and shall be performed in the order given:

1) Temperature Aging. Details given in 3.5
2) Humidification. Details given in 3.6
3) *Dielectric Test Under Humid Condition*.

Details given in 3.7

3.5 Temperature Aging

Exposure to elevated temperature may be accomplished by circulating electric current in the windings of the test sample, or by use of suitable ovens, or combinations thereof.

Where exposure to elevated temperature is accomplished by circulating electric current in the windings of the test sample, corresponding electrical elements of all samples (for example, all of the high-voltage windings and also all of the low-voltage windings) shall be connected in series to have the same current circulated in the like elements. It should be noted that separate current sources may be necessary for the high-voltage and low-voltage windings. Means for making small adjustments to the current through individual samples may be provided to aid in achieving the desired temperatures. Individual enclosures for the test models may be used to maintain test temperatures. However, the physical arrangement of the samples with respect to each other shall be such as to promote equality of temperature in all samples.

Any suitable method can be used for monitoring the temperature of the samples during the temperature exposure. The following method is recommended: One of the group of test samples shall be equipped with thermocouples and shall be used for temperature monitoring purposes only. The number and location of thermocouples shall be such as to give an accurate indication of the hottest-spot temperature and give an adequate knowledge of the temperature distribution within the sample to satisfy the conditions specified below.

The temperatures in all samples shall be monitored by one or more thermometers or thermocouples located on each sample. The relative position of the thermometers or thermocouples shall be the same for all samples. The monitored temperatures on individual test samples shall not be more than 2 °C less than that of the corresponding monitored points in the control model.

Test temperatures shall be maintained constant at the hottest spots within the sample as measured by the monitoring thermocouples. Thus, the hottest-spot temperature of each of the windings are the same. At other points within the sample, deviation from this temperature is permissible although such deviation shall be within limits of the temperature distribution in the actual transformer. Temperature differences between the hottest-spot winding temperature and the hottest-spot temperature of the high-to-low barriers between windings shall not exceed 30 °C unless it can be demonstrated that a greater difference occurs in the actual transformers represented by the test models.

The hottest-spot test temperature, once established, shall be maintained as a minimum value. No upper temperature tolerance is established. However, it should be noted that excessive plus temperature variation will give pessimistic life curves.

A periodic record of temperatures shall be taken to determine the average temperature during the temperature exposure cycle. Aging temperature and duration of each temperature cycle shall be so selected as to require 5 to 10 cycles to reach the average time to failure for a group of samples. When several groups of samples are tested at different temperatures, the duration of test cycles for different groups shall be so selected as to require approximately the same number of cycles to average failure. The heating-up time of the test samples at the beginning of the temperature cycle should not exceed 5 h. The temperature aging cycle shall commence when the required hottest-spot temperature is established and shall terminate when the cool-down period starts.

Copyright © 1986 IEEE All Rights Reserved

Copyright The Institute of Electrical and Electronics Engineers, Inc.
Provided by IHS under license with IEEE
No reproduction or networking permitted without license from IHS Not for Resale

Tests on any one group of samples shall be made at the same aging temperature until failure. Table 1 will serve as a guide to the selection of test temperatures although other combinations of time and temperature may be used to fit the degradation characteristics of the particular insulation system. If samples have not failed at the end of 7 cycles, the aging period of the following cycles may be extended to not more than twice the previous cycle time. If a failure occurs before the 4th cycle, the aging period of the following cycles may be decreased to not less than half the previous cycle time.

The various temperatures and times shown in Table 1 do not describe any actual insulation system but are intended only as a guide in selecting aging temperature. The temperature given in Table 1 cannot be expected to give the same end point for all insulation systems.

Temperature exposure shall be conducted in a relatively clean draft-free area, and the samples shall be covered to exclude dirt.

The time to failure of a sample, aged at one temperature, shall be considered to be equal to the cumulative duration of temperature exposure during all test cycles (see 3.4) less one half of the last cycle.

3.6 Humidity Conditioning

Exposure to humidity shall be made with the sample de-energized under the following conditions:

1) Samples shall be allowed to cool to room temperature prior to humidification
2) Duration of humidity exposure shall be 48 h minimum
3) For the humidity exposure, the test samples shall be placed in a suitable enclosure in which a relative humidity of not less than 90% shall be maintained.

As one method to maintain this humidity, the bottom of the test chamber may be covered with a fiat tray containing a saturated solution, according to ASTM E104-51 (R 1971) [6], with dissolved excess of this salt present. The chamber shall be provided with a blower or a fan for internal circulation and shall be lined with an effective vapor barrier material (for example, aluminum foil). The humidification temperature shall be maintained within the range of 25 °C –40 °C.

3.7 Dielectric Tests

3.7.1 General

Initial screening and periodic end-point dielectric tests shall be conducted according to either 3.7.2, Method A, or 3.7.3, Method B, as applicable. Dielectric tests shall be applied while the samples are in the humid condition. These samples may be removed from the humidity chamber prior to the test, in which case all dielectric tests shall be completed within 23.7.3 h after removal. The order of the tests shall be:

1) Turn-to-turn insulation
2) Layer-to-layer
3) Section-to-section
4) Applied potential
   a) Windings-to-ground
   b) Winding-to-winding

When the initial capability, screening, and periodic end-point tests are done at 50/60 Hz, test voltages shall be essentially sinusoidal. Screening and periodic end-point test voltages 50/60 Hz shall be applied for a duration of 2 s. For the definition of **essentially sinusoidal**, see ANSI/IEEE Std4-1978 [5], Section 4. The tests shall be conducted using a suitable 500 VA or larger transformer whose output is essentially sinusoidal and can be varied. A smaller capacity transformer may be used if the voltage is measured at the output of the test transformer either directly or

Copyright © 1986 IEEE All Rights Reserved

Copyright The Institute of Electrical and Electronics Engineers, Inc.
Provided by IHS under license with IEEE
No reproduction or networking permitted without license from IHS Not for Resale

For the definition of **essentially sinusoidal**, see ANSI/IEEE Std4-1978 [5], Section 4. The tests shall be conducted using a suitable 500 VA or larger transformer whose output is essentially sinusoidal and can be varied. A smaller capacity transformer may be used if the voltage is measured at the output of the test transformer either directly or through a suitable potential transformer or capacitance voltage divider. The test voltage should be started at one-quarter or less of the full value and brought up to full value in not more than 15 s. At the end of the test period (2 s) the voltage shall be reduced to one-quarter value or less in not more than 5 s before the circuit is opened. A relief gap set at a voltage 10%. or more in excess of the specified test voltage may be connected during the 50/60 Hz tests.

A collapse of voltage or the inability to maintain voltage shall indicate dielectric failure.

NOTE — ANSI/ASTM D149-81 [3] suggests that tripping of a circuit breaker in the primary of the test transformer may be used to indicate breakdown. The circuit breaker should be set to trip if the current flowing through the failure and the secondary of the transformer exceeds 50 mA. However, on larger-sized models, the reactive component of the current may be greater than 50 mA, in which case a circuit breaker with a higher trip setting should be used.

3.7.2 Method A

From transient voltage analysis of full-sized transformer windings of the type being evaluated, determine the maximum percent of the rated full-wave impulse (BIL) voltage that is experienced for each potential failure mode represented, that is, turn-to-turn, layer-to-layer, etc.[8]

The maximum percentage of the full-wave impulse voltage appearing at the various failure-mode points can be determined from voltage probe measurements at these points made during the transient analysis. The maximum percent voltage can occur either as a result of the initial distribution of the impulse voltage throughout the winding, or by resonant voltages that are a response of the network to the impulse voltage. The maximum turn-to-turn impulse voltage is usually experienced near the line end of the coil or near the neutral end of the coil. The maximum layer-to-layer voltage is usually experienced between the first and second layers from a terminal of a section type of winding or from the first to second layer from a terminal of a barrel winding. The maximum section-to-section voltage is usually experienced from the first to the second section or second to third section from a terminal. The maximum section-to-ground voltage is usually experienced from a terminal section-to-ground. The maximum winding-to-ground voltage is usually experienced from either the terminal section-to-ground, or from the terminal layer-to-ground in the case of a barrel winding. For a continuous disc winding the maximum voltage with respect to ground usually occurs at the sixth through twelfth sections from a line terminal. It is usually necessary to make a number of experimental probe measurements by use of thetransient analysis equipment to determine the maximum possible voltage for each failure mode.

The impulse voltage so determined is then converted to a 50/60 Hz equivalent voltage. Seventy-five percent of this 50/60 Hz voltage is then used for the tests on both aged and unaged samples as shown below (except for turn-turn in the 1200 V class).

Screening tests of 50/60 Hz on unaged models and the periodic end-point tests on the aged models for each mode of failure shall be made at voltages as determined from the following samples:

1) Turn-to-turn voltage shall be the greater of 120 V or the following equation:

$$\frac{(\text{Max \%}^* \cdot \text{FW kV})(1000)(0.707)(0.75)}{1.1 \cdot 100}\text{V} \qquad (4)$$

* Entered as percent.

(Higher voltage may be used at the manufacturer’s option.)

[8] See 1.4 and footnote 5.

 Copyright © 1986 IEEE All Rights Reserved

Copyright The Institute of Electrical and Electronics Engineers, Inc.
Provided by IHS under license with IEEE
No reproduction or networking permitted without license from IHS Not for Resale

where
Max% = maximum percentage of the full-wave voltage appearing at the failure mode point
FW kV = full-wave impulse voltage, kV

2) Winding-to-winding, or winding-to-ground voltage shall be
a) For rated winding full-wave basic impulse insulation level of 60 kV or less

$$\frac{(\text{Max \%}^* \cdot \text{FW kV})(1000)(0.707)(0.75)}{1.1 \cdot 100}\text{V} \quad (5)$$

b) For rated winding full-wave basic impulse insulation level of greater than 60 kV

$$\frac{(\text{Max \%}^* \cdot \text{FW kV})(1000)(0.707)(0.75)}{1.25 \cdot 100}\text{V} \quad (6)$$

3) All other modes of potential failure such as section-to-section and layer-to-layer voltage shall be

$$\frac{(\text{Max \%}^* \cdot \text{FW kV})(1000)(0.707)(0.75)}{1.1 \cdot 100}\text{V} \quad (7)$$

* Entered as percent.

Alternate Method

As an alternate method, screening and endpoint tests may be performed using 1.2/50 μs voltage impulses (see ANSI/IEEE Std 4-1978 [5]) or a combination of 50/60 Hz turn-turn tests and impulse tests for all other test points as follows:

1) For 50/60 Hz turn-to-turn tests, the voltage shall be specified as in 3.7.2(1).
2) For impulse turn-to-turn tests, the voltage shall be the greater of 170 V peak or Eq 8. Higher voltage may be used at the manufacturer's option.
3) For all other test points, the test voltage shall be calculated by Eq 8.

Impulse test voltage =

$$\frac{(\text{Max \%}^* \cdot \text{FW kV})(1000) \cdot (0.75)}{100}\text{V} \quad (8)$$

* Entered as percent.

Collapse of the voltage wave at any point indicates dielectric failure (see 3.7).

Once a test mode is established, it shall be used to completion of the work.

3.7.3 Method B

Initial capability tests shall be conducted on a minimum of two unaged samples to determine the initial 50/60 Hz breakdown voltage for each potential mode of failure, except for the turn-to-turn mode.

Each failure mode, except turn-to-turn, of the samples being tested shall be subjected to a series of 50/60 Hz voltage applications applied in increasing steps until breakdown occurs. The steps shall be approximately 10% of the anticipated breakdown voltage, starting at 70% of this value. The voltage shall be held at each step for a duration of 2 s. The highest voltage step maintained for 2 s without breakdown shall be recorded for each failure mode on each sample.

Copyright © 1986 IEEE All Rights Reserved

Copyright The Institute of Electrical and Electronics Engineers, Inc.
Provided by IHS under license with IEEE
No reproduction or networking permitted without license from IHS Not for Resale

The average of the withstood voltages for each failure mode on the samples tested shall be considered to be the initial capability voltage value for those failure modes.

For the turn-to-turn modes, the greater of the following values shall be used for screening tests and periodic end-point tests:

$$\frac{(2\%^{*} \cdot \text{FW kV BIL})(1000)(0.707)(0.75)}{1.1 \cdot 100}\text{V}$$

* Entered as percent.

or

1) 1200 V Class—250 V
2) Over 1200 V to 15 kV Class—500 V
3) Over 15 kV to 34.5 kV Class—750 V

unless it can be shown by test that 2% is too high, in which case the test value may be substituted for 2% in the above formula.

Screening tests on unaged samples and the periodic end-point tests on the aged samples for each mode of failure other than turn-to-turn shall be made at 75% of the initial capability voltage values as determined in the preceding sections.

3.7.4 Test-Model Failures

A test model whose insulation faded on any one of the tests is disqualified for any further tests for this particular type of failure (for example, turn-to-turn). However, testing may be continued to determine the time to failure of the remaining failure modes included in the test model.

4. Reporting

Data shall be reduced statistically in accordance with IEEE Std 101-1972 [8] and IEEE Std 101A-1974 [9], Appendix B, for the purpose of establishing regression lines only. A report of the results shall contain the following information:

1) Identification or description of the test specimens
2) The duration of temperature exposure, expressed in terms of the total number of hours to failure, in accordance with 3.5. The number of test cycles shall be recorded.
3) If the test procedure of 3.1.1, Method 1, is used, the report shall contain:
   a) Calculated value of linearity. If the value is not suitable, additional data shall be obtained.
   b) Tabulated values of time to failure versus temperature calculated from the equation of the regression line.
   c) A plot of these values on coordinate paper with a logarithmic scale to present time to failure (hours) on the ordinate and the reciprocal absolute temperature scaled to represent temperature in °C on the abscissa.
   d) Extrapolated value of temperature corresponding to a time-to-failure value of 40 000 h.
   e) Temperature classification °C of the insulation system. This shall be the temperature, in °C, nearest to, but less than, the value obtained by extrapolation above, secured from the list of temperature class values approved for this purpose by IEEE Std 1-1969 [7].
4) If the test procedure of 3.12, Method 2, is used, the report shall contain
   a) Calculated average value of life of the samples $\bar{L}_2$
   b) Calculated temperature value to yield time to failure of L_1 = 40 000 h, using Eq 2.
   c) Temperature class of the insulation system. This shall be the temperature nearest to, but less than, the value obtained by Eq 2, obtained from the list of temperature class values approved for this purpose by IEEE Std 1-1969 [7] or related standards.

Copyright © 1986 IEEE All Rights Reserved

Copyright The Institute of Electrical and Electronics Engineers, Inc.
Provided by IHS under license with IEEE
No reproduction or networking permitted without license from IHS Not for Resale

Annex A

(Informative)

(These Appendixes are not a part of ANSI/IEEE C57.12.56-1986, IEEE Standard Test Procedure for Thermal Evaluation of Insulation Systems for Ventilated Dry-Type Power and Distribution Transformers.)

As a result of experience to date, certain preferred techniques are suggested. They are given below.

A.1 Method for Applying Thermocouples

A.1.1

For the measurement of the hottest-spot temperature, it is preferable to braze the thermocouple junction to the conductor. Small-sized thermocouple wire should be used (for example, AWG No 30). As an alternate method, the junction may be brazed to a piece of sheet copper (for example, $^{1}/_{2} \cdot 1 \cdot 0.004$ inch thick) and this be thoroughly embedded into the winding at the hottest-spot location during the winding operation.

A.1.2

For the measurement of the insulating barrier temperature, the use of a thermocouple appears to be most convenient. Care shall be taken to bring it in through thermal contact with the insulating material to reduce possible error caused by heat conduction along the thermocouple leads. The accuracy of the measurement will be improved by the use of small-sized leads (not over AWG No 30), brazing the hot junction to a thin copper plate and bonding this temperature detector to the barrier material using a suitable bond (for example, epoxy resin adhesive). Thus constructed, the temperature detector may be applied to the inner surface of the barrier or it may be embedded in the barrier material during manufacture.

A.1.3

As a check on the equality of the temperature of the several samples on test, 3.5 of this standard suggests the use of thermometers or a thermocouple located in several samples in an identical position. Considerable care shall be exercised in locating the thermocouples or meters to be able to obtain consistent and accurate results. For the transformer model illustrated in Fig 3 of this standard it was established experimentally that the high-voltage, hottest-spot winding temperature occurs in the third section from the top and one third of the radial section width from the innermost turn. In the low-voltage winding and in the barrier tube, the hottest spot occurs on the level of centerline between the second and third sections from the top. An arrangement shown on Fig A1 is suggested.

In Fig A1 the designation O copper strip, which contains the thermocouple, its dimensions and shape, and the exact location of the thermocouple junction shall be carefully duplicated for all the thermocouples used in any one test. The same applies to O which gives the shape and size of the fiberglass tape packing which wedges the assembly between the sections of the model. Furthermore, care shall be used to prevent dielectric failure to the thermocouple.

A.2 Enclosures

Section 3.6 provides for certain requirements in the temperature distribution within the sample in Fig A1. It has been found in the tests that this requirement may not always be satisfied if the models are heated by electric current in ambient air. Specifically, under these conditions, the required barrier temperature may not be attained. It has been found that enclosing the models individually in light aluminum foil enclosures remedies this situation. These aluminum enclosures serve a further purpose of thermally isolating the several models from each other, thus preventing the models at the ends of a row from running cooler than those in the middle of a row. The preferred form of such an enclosure is a bell cover made on a rectangular block form, open at the bottom but closed at the top,

Copyright © 1986 IEEE All Rights Reserved

Copyright The Institute of Electrical and Electronics Engineers, Inc.
Provided by IHS under license with IEEE
No reproduction or networking permitted without license from IHS Not for Resale

extending down far enough to cover the flange of the bottom end plate. It should be of identical size and shape for all samples under test. It should cover the samples in a reasonably identical manner.

A.3 Temperature Control

For the control of temperature of the samples during the heating cycle, the use of an accurate electronic temperature controller is preferred. A reasonably accurate control may be obtained by the use of a sensitive thermostat heated by a coil connected in series with the test samples. It is to be understood that such a control will not be necessary if an accurate controlled voltage is available as the source of the heating power and if the room temperature is maintained constant.

A.4 Humidity Control

It was found during the test that an accurate control of humidity exposure is essential. It was furthermore found that to control the humidity using wet and dry bulb thermometers is quite difficult because, for the humidity specified in the code, the temperature difference between dry and wet bulbs is only about 1 °C. For this reason, humidity control using a suitable salt solution in a vapor-tight enclosure is recommended unless equipment has sufficient accuracy.

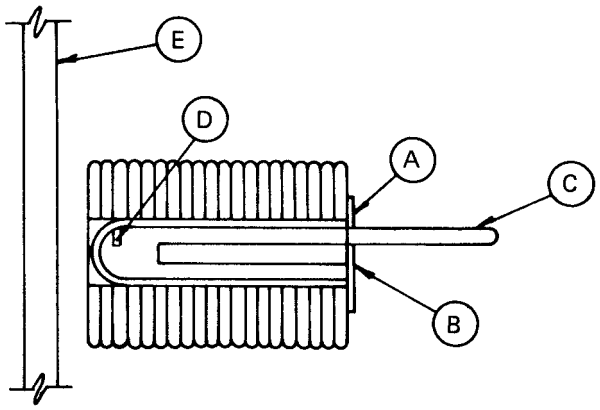

(A) THIN, FLEXIBLE COPPER STRIP
(B) FIBERGLASS TAPE PACKING
(C) THERMOCOUPLE LEAD
(D) THERMOCOUPLE JUNCTION
(E) HIGH-VOLTAGE BARRIER CYLINDER

Figure A1—Suggested Arrangement for Thermocouples

Copyright © 1986 IEEE All Rights Reserved

Copyright The Institute of Electrical and Electronics Engineers, Inc.
Provided by IHS under license with IEEE
No reproduction or networking permitted without license from IHS Not for Resale

Annex B

(Informative)

Outline for Transformer Insulation Systems—Procedure and Test Cycles

Steps		Procedure		
		Use Method A (3.7.2**)**	**or**	**Method B (**3.7.3**)**
I	Initial Screening Dielectric Tests (After Humidification, see 3.7.1) (1) Turn-to-turn (2) Layer-to-layer (3) Section-to-section (4) Applied potential (a) Winding-to-ground (b) Winding-to-winding	A. Impulse voltage related to 50/60 Hz voltage (3.2) B. 50/60 Hz screening tests made at 75% of required capability: (1) Turn-to-turn (a) Turn-to-turn voltage shall be the greater of 120 V or $\frac{(\text{Max }\%^* \cdot \text{FW kV})(1000)(0.707)(0.75)}{1.1 \cdot 100}$ V * Entered as percent. A higher voltage may be used at manufacturer's option. (2) Winding to winding or winding-to-ground for rated FW BIL of winding: (a) 60 kV or less $\frac{(\text{Max }\%^* \cdot \text{FW kV})(1000)(0.707)(0.75)}{1.1 \cdot 100}$ V (b) Greater than 60 kV $\frac{(\text{Max }\%^* \cdot \text{FW kV})(1000)(0.707)(0.75)}{1.25 \cdot 100}$ V (c) All other modes $\frac{(\text{Max }\%^* \cdot \text{FW kV})(1000)(0.707)(0.75)}{1.1 \cdot 100}$ V * Entered as percent. C. Alternate method-impulse test (1) Turn-to-turn (a) 50/60 Hz as B(1)(a) (b) Impulse—greater of 170 V peak or Eq 8. Higher voltage may be used at the manufacturer's option. (2) For all other areas: Impulse Test Voltage = $\frac{(\text{Max }\%^* \cdot \text{FW kV})(1000)(0.75)}{100}$ V peak or Eq 8 * Entered as percent.		Use minimum of two unaged samples. Determine initial 50/60 Hz breakdown voltage for each mode of failure. (a) For turn-to-turn, the greater of: $\frac{(2\%^* \cdot \text{FW kV BIL})(1000)(0.707)(0.75)}{1.1 \cdot 100}$ * Entered as percent. or (1) 1200 V class-250 V (2) Over 1200 V to 15 kV class-500 V (3) Over 15 kV to 34.5 kV class-750 V (b) Start 50/60 Hz tests at 70% of breakdown. Use 10% steps held for 2 s. The average of the withstand voltage for each failure is considered to be the initial withstand voltage. Use 75% of the average withstand for screening tests and periodic end-point tests on the aged samples for each mode of failure other than turn-to-turn.

Copyright © 1986 IEEE All Rights Reserved

Copyright The Institute of Electrical and Electronics Engineers, Inc.
Provided by IHS under license with IEEE
No reproduction or networking permitted without license from IHS
Not for Resale

Outline for Transformer Insulation Systems—Procedure and Test Cycles (Continued)

II	Temperature Aging Sections 3.4 and 3.5	Circulate current in high-voltage and low-voltage windings to obtain temperature desired. Separate current sources may be required for the low-voltage and high-voltage windings. Use enclosures on each sample to obtain uniform temperature. One sample shall be equipped with thermocouples to monitor temperature in the series connected sample. Temperatures shall be maintained in conformity. The monitored temperature of each test sample shall not be more than 2 °C less than than of the corresponding monitored point in the control sample. Aging temperatures and duration of each temperature cycle are to be selected so as to require 5 to 10 cycles to reach the average time to failure for a group of samples. See Table 1 for temperature and exposure time guide.
III	Humidification Section 3.6	Expose test samples except control sample, de-energized: (1) Cool to room temperature (2) Expose 48 h in a suitable enclosure at not less than 90% humidity. See ASTM E104-51 (R1971) [6] for method to obtain humidity and procedure.
IV	Dielectric Tests Sections 3.7 and 3.7.1	These tests are the same as for step I *but* the test are to be applied to samples in *humid condition within* 2 h after removal from enclosure. The order of tests are the same as outlined for initial screening (Step 1).
V	Reports Sections 4 and 2.3.	(1) Reduce data statistically in accordance with IEEE Std 101-192 [8] including IEEE Std 101-A-1974 [9], Appendix B, for regression line only. (2) Describe test samples. (3) Record duration of heat exposure to failure (life L) of each sample at each exposure temperature expressed in terms of the total hours to failure — including the number of test cycles (see 2.3) (4) If Method 1 (see 3.1.1) is used report: (a) Calculated value of linearity. If the value is not suitable obtain additional data. (b) Tabulate values of: life versus temperature calculated from the equation of the regression line. (c) Plot these values on logarithmic paper having hours of time to failure as ordinate and the reciprocal absolute temperature as the abscissa in °C. (d) Extrapolated value of temperature corresponding to a time to failure value of 40 000 h. (e) Temperature classification, °C of the insulation system. See IEEE Std 1-1969 [7] for temperature class value (5) If Method 2 (see 3.1.2) is used report: (a) Calculated average value of life of sample ($\bar{L}_2$). (b) Calculated temperature value to yield a life L_1 =40 000 h. (c) Temperature classification, °C of the insulation system. See IEEE Std 1-1969 [7] for temperature class value.

Copyright © 1986 IEEE All Rights Reserved

Copyright The Institute of Electrical and Electronics Engineers, Inc.
Provided by IHS under license with IEEE
No reproduction or networking permitted without license from IHS
Not for Resale