IEEE Std C37.74™-2003

IEEE Standards

C37.74™

IEEE Standard Requirements for Subsurface, Vault, and Pad-Mounted Load-Interrupter Switchgear and Fused Load-Interrupter Switchgear for Alternating Current Systems Up to 38 kV

IEEE Power Engineering Society

Sponsored by the
Switchgear Committee

IEEE

Published by
The Institute of Electrical and Electronics Engineers, Inc.
3 Park Avenue, New York, NY 10016-5997, USA

26 September 2003

Print: SH95091
PDF: SS95091

Copyright The Institute of Electrical and Electronics Engineers, Inc.
Provided by IHS under license with IEEE
No reproduction or networking permitted without license from IHS

Not for Resale

Recognized as an
American National Standard (ANSI)

IEEE Std C37.74™-2003

IEEE Standard Requirements for Subsurface, Vault, and Pad-Mounted Load-Interrupter Switchgear and Fused Load-Interrupter Switchgear for Alternating Current Systems Up to 38 kV

Sponsor

Switchgear Committee
of the
IEEE Power Engineering Society

Approved 20 March 2003

IEEE-SA Standards Board

Approved 7 August 2003

American National Standards Institute

Abstract: Required definitions, ratings, procedures for performing design tests and production tests, and construction requirements for subsurface, vault, and pad-mounted load-interrupter switchgear and fused load-interrupter switchgear for ac systems up to 38 kV are specified.
Keywords: fused, load-interrupter, pad-mounted, subsurface, switchgear, vault, way

Copyright The Institute of Electrical and Electronics Engineers, Inc.
Provided by IHS under license with IEEE
No reproduction or networking permitted without license from IHS
Not for Resale

TERMS OF USE

Please Read Carefully

The Institute of Electrical and Electronics Engineers, Inc., ("IEEE") owns the copyright to this Document in all forms of media. Copyright of the text retrieved, displayed, or output from this Document is owned by IEEE and is protected by the copyright laws of the United States and by international treaties. The IEEE reserves all rights not expressly granted to the user.

Except as allowed by the copyright laws of the United States of America, applicable international treaties, or any license or agreement the user or the user's employer may have entered into with the IEEE or one of its authorized distributors, the user may not copy and/or distribute copies of this Document, nor significant portions of the document, in any form, nor may the user post this document on any intranet, website, or database without prior written permission from the IEEE.

Permission and/or requests for licenses should be directed to:

Manager, Standards Licensing and Contracts
+1-732-562-3804

or in writing at:

IEEE Standards Association
Manager, Standards Licensing and Contracts
445 Hoes Lane
Piscataway, NJ 08854

The Institute of Electrical and Electronics Engineers, Inc.
3 Park Avenue, New York, NY 10016-5997, USA

Copyright © 2003 by the Institute of Electrical and Electronics Engineers, Inc.
All rights reserved. Published 26 September 2003. Printed in the United States of America.

IEEE is a registered trademark in the U.S. Patent & Trademark Office, owned by the Institute of Electrical and Electronics Engineers, Inc.

Print: ISBN 0-7381-3590-9 SH95091
PDF: ISBN 0-7381-3591-7 SS95091

No part of this publication may be reproduced in any form, in an electronic retrieval system or otherwise, without the prior written permission of the publisher.

Copyright The Institute of Electrical and Electronics Engineers, Inc.
Provided by IHS under license with IEEE
No reproduction or networking permitted without license from IHS Not for Resale

IEEE Standards documents are developed within the IEEE Societies and the Standards Coordinating Committees of the IEEE Standards Association (IEEE-SA) Standards Board. The IEEE develops its standards through a consensus development process, approved by the American National Standards Institute, which brings together volunteers representing varied viewpoints and interests to achieve the final product. Volunteers are not necessarily members of the Institute and serve without compensation. While the IEEE administers the process and establishes rules to promote fairness in the consensus development process, the IEEE does not independently evaluate, test, or verify the accuracy of any of the information contained in its standards.

Use of an IEEE Standard is wholly voluntary. The IEEE disclaims liability for any personal injury, property or other damage, of any nature whatsoever, whether special, indirect, consequential, or compensatory, directly or indirectly resulting from the publication, use of, or reliance upon this, or any other IEEE Standard document.

The IEEE does not warrant or represent the accuracy or content of the material contained herein, and expressly disclaims any express or implied warranty, including any implied warranty of merchantability or fitness for a specific purpose, or that the use of the material contained herein is free from patent infringement. IEEE Standards documents are supplied "**AS IS**."

The existence of an IEEE Standard does not imply that there are no other ways to produce, test, measure, purchase, market, or provide other goods and services related to the scope of the IEEE Standard. Furthermore, the viewpoint expressed at the time a standard is approved and issued is subject to change brought about through developments in the state of the art and comments received from users of the standard. Every IEEE Standard is subjected to review at least every five years for revision or reaffirmation. When a document is more than five years old and has not been reaffirmed, it is reasonable to conclude that its contents, although still of some value, do not wholly reflect the present state of the art. Users are cautioned to check to determine that they have the latest edition of any IEEE Standard.

In publishing and making this document available, the IEEE is not suggesting or rendering professional or other services for, or on behalf of, any person or entity. Nor is the IEEE undertaking to perform any duty owed by any other person or entity to another. Any person utilizing this, and any other IEEE Standards document, should rely upon the advice of a competent professional in determining the exercise of reasonable care in any given circumstances.

Interpretations: Occasionally questions may arise regarding the meaning of portions of standards as they relate to specific applications. When the need for interpretations is brought to the attention of IEEE, the Institute will initiate action to prepare appropriate responses. Since IEEE Standards represent a consensus of concerned interests, it is important to ensure that any interpretation has also received the concurrence of a balance of interests. For this reason, IEEE and the members of its societies and Standards Coordinating Committees are not able to provide an instant response to interpretation requests except in those cases where the matter has previously received formal consideration.

Comments for revision of IEEE Standards are welcome from any interested party, regardless of membership affiliation with IEEE. Suggestions for changes in documents should be in the form of a proposed change of text, together with appropriate supporting comments. Comments on standards and requests for interpretations should be addressed to:

Secretary, IEEE-SA Standards Board
445 Hoes Lane
P.O. Box 1331
Piscataway, NJ 08855-1331
USA

Note: Attention is called to the possibility that implementation of this standard may require use of subject matter covered by patent rights. By publication of this standard, no position is taken with respect to the existence or validity of any patent rights in connection therewith. The IEEE shall not be responsible for identifying patents for which a license may be required by an IEEE standard or for conducting inquiries into the legal validity or scope of those patents that are brought to its attention.

Authorization to photocopy portions of any individual standard for internal or personal use is granted by the Institute of Electrical and Electronics Engineers, Inc., provided that the appropriate fee is paid to Copyright Clearance Center. To arrange for payment of licensing fee, please contact Copyright Clearance Center, Customer Service, 222 Rosewood Drive, Danvers, MA 01923 USA; +1 978 750 8400. Permission to photocopy portions of any individual standard for educational classroom use can also be obtained through the Copyright Clearance Center.

Copyright The Institute of Electrical and Electronics Engineers, Inc.
Provided by IHS under license with IEEE
No reproduction or networking permitted without license from IHS
Not for Resale

Introduction

(This introduction is not part of IEEE Std C37.74-2003, IEEE Standard Requirements for Subsurface, Vault, and Pad-Mounted Load-Interrupter Switchgear and Fused Load-Interrupter Switchgear for Alternating Current Systems up to 38 kV.)

This standard is a consolidation of a series of standards for submersible and pad-mounted switchgear previously covered in IEEE Std C37.71™-2001 [B4][a], ANSI C37.72-1987 [B1], and IEEE Std C37.73™-1998 [B5]. Substantial changes and improvements were made to IEEE Std C37.71-2001 [B4] and ANSI C37.72-1987 [B1] for testing requirements as was previously done for IEEE Std C37.73-1998 [B5]. The consolidation of the standards is based on commonality of the applications of the equipment that lead to a commonality of the testing and ratings. In one notable example, the higher cable-charging switching current ratings of IEEE Std C37.71-2001 [B4] were used. These standards were essentially similar, with primary differences relating to mounting configurations. This standard covers subsurface, vault, and pad-mounted switchgear and includes switches, fault interrupters, fuses, loadbreak devices, and ground switches. Live-front and dead-front equipment are covered, including all types of connectors and insulating media.

This standard assigns an overall rating to the switchgear for the common ratings of dielectric withstand, peak withstand current, short-time withstand current, and fault-making current. The ratings for the switchgear are based on the minimum ratings of the components or ways. In addition, each way is assigned specific ratings reflecting its continuous current and its specific load or fault interrupting current depending upon the components used in that way.

This standard also recognizes designs for equipment specifically intended for grounded-wye system applications, utilizing phase-to-ground rated devices for specific applications.

There are substantial improvements and detailed test requirements for switching tests for the fault interrupters, switches, and loadbreak devices that can be operated by opening and closing the fuse assemblies. This standard also includes testing to verify proper operation of the fuse within the enclosed equipment. It also includes testing of grounding switches used in the equipment.

Altitude correction factors have been removed. Refer to the following paragraph and Annex B.

Although this standard may be published before the work on IEEE PC37.100.1 [B6] is finished, it is the intention of the Pad-Mount Working Group to adopt or reference common clauses as they become available, specifically, on the treatment of

— Altitude correction factors
— Total temperature limits for contacts, connectors, and insulation
— Common test methods and procedures

[a]The numbers in brackets correspond to the numbers of the bibliography in Annex C.

--`,,`,,`-`-`,,`,,`,`,,`---
Copyright © 2003 IEEE. All rights reserved.
Copyright The Institute of Electrical and Electronics Engineers, Inc.
Provided by IHS under license with IEEE
No reproduction or networking permitted without license from IHS
Not for Resale

Participants

The Accredited Standards Committee on Power Switchgear, C37, which reviewed and approved this standard, had the following members at the time of approval:

T. W. Olsen, *Acting Chair*
A. K. McCabe, *Vice Chair, HV Standards*
J. C. Scott, *Vice Chair, LV Standards*
D. L. Swindler, *Vice Chair, IEC Activities*
N. Ahmad, *Co-Secretary*
J. Collins, *Co-Secretary*

Organization Represented	*Name of Representative*
Electric Light & Power Group/Edison Electric Institute	E. M. Worland D. E. Galicia J. L. Koepfinger G. J. Martuscello Y. J. Musa
Institute of Electrical and Electronics Engineers	M. D. Sigmon A. Dixon J. M. Jerabek T. Royster J. Wood D. J. Lemmerman (alt) R. W. Long
National Electrical Manufacturers Association	G. Sakats G. T. Jones R. W. Long T. W. Olsen D. T. Stone
Testing Laboratory (Safety) Group	P. J. Notarian E. Roseen
Tennessee Valley Authority	D. N. Reynolds
Association of Iron & Steel Engineers	(vacant)
International Electrical Testing Association (NETA)	A. Peterson
U.S. Department of Agriculture	H. Bowles
U.S. Department of the Army—Office of the Chief of Engineers	J. A. Gilson
U. S. Department of the Navy—Naval Construction Battalion Center	D. Mills
Western Area Power Administration	(vacant)
National Electric Contractors Association	D. Harwood
Technical Liaison (nonvoting)	W. E. Laubach C. L. Wagner

Copyright © 2003 IEEE. All rights reserved.

Copyright The Institute of Electrical and Electronics Engineers, Inc.
Provided by IHS under license with IEEE
No reproduction or networking permitted without license from IHS
Not for Resale

At the time this standard was completed, the Recloser Working Group of the Recloser and Other Distribution Equipment (RODE) Subcommittee of the IEEE Switchgear Committee had the following members:

David T. Stone, *Chair*

Don Akers	Marcel Fortin	Donald R. Martin
Charles Ball	Edward M. Jankowich	Jim Ransom
Harvey L. Bowles	Larry McCall	John G. Wood
Raymond L. Capra	Steven Meiners	Janusz Zawadzki

The following members of the balloting committee voted on this standard. Balloters may have voted for approval, disapproval, or abstention.

Charles Ball	Edward Horgan	Ted W. Olsen
Edward Bertolini	Edward M. Jankowich	R. N. Parry
Glenn Borchardt	Ginger Kamber	Thomas Pekarek
Harvey L. Bowles	Joseph L. Koepfinger	Hugh C. Ross
Lyne Brisson	Boris Kogan	Timothy E. Royster
Robert Brown	David Krause	James Ruggieri
Raymond L. Capra	Daniel Kremer	E. William Schmunk
James Christensen	Stephen R. Lambert	R. Kirkland Smith
Tommy Cooper	Franco Lo Monaco	David T. Stone
Stephen Dare	Gregory Luri	John Teixeira
Frank DeCesaro	Antonio Mannarino	Stan H. Telander
Donald Dunn	Marcel Fortin	Alan Traut
David Gilmer	Nigel P. McQuin	Charles L. Wagner
Mietek T. Glinkowski	Steven Meiners	James W. Wilson
Keith I. Gray	Gary L. Michel	John G. Wood
Randall C. Groves	Alec Monroe	Elbert M. Worland
Harold L. Hess	Georges F. Montillet	Janusz Zawadzki
	Frank J. Muench	

When the IEEE-SA Standards Board approved this standard on 20 March 2003, it had the following membership:

Don Wright, *Chair*

Howard M. Frazier, *Vice Chair*

Judith Gorman, *Secretary*

H. Stephen Berger	Donald N. Heirman	Daleep C. Mohla
Joseph A. Bruder	Laura Hitchcock	William J. Moylan
Bob Davis	Richard H. Hulett	Paul Nikolich
Richard DeBlasio	Anant Kumar Jain	Gary S. Robinson
Julian Forster*	Lowell G. Johnson	Malcolm V. Thaden
Toshio Fukuda	Joseph L. Koepfinger*	Geoffrey O. Thompson
Arnold M. Greenspan	Thomas J. McGean	Doug Topping
Raymond Hapeman	Steve M. Mills	Howard L. Wolfman

*Member Emeritus

Also included are the following nonvoting IEEE-SA Standards Board liaisons:

Alan Cookson, *NIST Representative*
Satish K. Aggarwal, *NRC Representative*

Savoula Amanatidis
IEEE Standards Managing Editor

Copyright © 2003 IEEE. All rights reserved.

Copyright The Institute of Electrical and Electronics Engineers, Inc.
Provided by IHS under license with IEEE
No reproduction or networking permitted without license from IHS
Not for Resale

Contents

Introduction iv

Participants v

1. Scope 1

2. References 1

3. Definitions 3

4. Service conditions 4

4.1 Usual service conditions 4
4.2 Unusual service conditions 4
4.2.1 Abnormal ambient temperatures 5
4.2.2 Altitudes above 1000 m 5

5. Ratings, required related capabilities, and test requirements 5

5.1 General 5
5.2 Rating information 5
5.2.1 Overall ratings 5
5.2.2 Individual way ratings 7
5.3 Continuous current ratings and related test requirements 8
5.3.1 Conditions of continuous current rating 8
5.3.2 Limits of observable temperature rise 9
5.3.3 Application of fuses 9

6. Design tests (type tests) 12

6.1 General 12
6.1.1 Condition of DSG to be tested 13
6.1.2 Mounting of the DSG 13
6.1.3 Maintenance 13
6.1.4 Power-frequency 13
6.2 Tests on connectors and bushings used on DSG 13
6.3 Testing of DSG as an entity 14
6.3.1 General 14
6.3.2 Test requirements 14
6.3.3 Condition of DSG following short-circuit tests 14
6.4 Testing of switches installed in switched ways and fused-switch ways 15
6.4.1 General 15
6.4.2 Test sequence 15
6.4.3 Condition of switching device in switched and fused-switch ways after test sequence 15
6.5 Testing of switching devices in fused-loadbreak ways 16
6.5.1 General 16
6.5.2 Test sequence 17
6.5.3 Condition of switching device in fused-loadbreak ways after test sequence 17
6.6 Testing of fusing devices used in fused ways, fused-switch ways, or fused-loadbreak ways ... 17
6.6.1 General 17
6.6.2 Test sequence 17
6.6.3 Interrupting performance of fusing devices in the DSG 18

Copyright © 2003 IEEE. All rights reserved.

Copyright The Institute of Electrical and Electronics Engineers, Inc.
Provided by IHS under license with IEEE
No reproduction or networking permitted without license from IHS
Not for Resale

6.7 Test methods 18
6.7.1 General 18
6.7.2 Dielectric tests 18
6.7.3 Continuous current test 21
6.7.4 Short-circuit withstand current tests 22
6.7.5 Switching tests 25
6.7.6 Thermal runaway test 28
6.7.7 Partial discharge (corona) tests 28
6.7.8 DC withstand voltage test 29
6.7.9 Sealed test pressure tests 30
6.7.10 Mechanical operations tests 30

7. Production tests (routine tests) 31

7.1 Circuit resistance test 31
7.2 Power-frequency withstand voltage test 31
7.3 Partial discharge test 31
7.4 Leak test 31
7.5 Operating tests 31

8. Field tests on units in service, including dc withstand tests on cables 32

9. Construction requirements 33

9.1 Grounding provision 33
9.2 Manual operating provisions 33
9.3 Position indicators 33
9.4 Insulating medium quantity indicators 33
9.5 Drain and replacement provision 33
9.6 Sampling and adding provisions 34
9.7 Parking stands 34
9.8 Bushings 34
9.9 Enclosure construction—submersible and pad-mounted equipment 34
9.10 Enclosure construction—pad-mounted equipment 34
9.11 Nameplate 34
9.12 User identification plate 35

10. Shipping requirements 36

Annex A (informative) X/R ratios 37

A.1 Time constant (tcc) and X/R ratio 37
A.2 Asymmetrical fault current 37

Annex B (informative) Altitude correction factors 39

B.1 Introduction 39
B.2 Altitude correction factors 39
B.3 Examples for switchgear with 110 kV/BIL already rated for 1000 m 40
B.4 Examples for switchgear ratings based on 110 kV BIL withstand tests referred to sea level NTP without adjustment for 1000 m 41

Annex C (informative) Bibliography 42

Copyright © 2003 IEEE. All rights reserved.

Copyright The Institute of Electrical and Electronics Engineers, Inc.
Provided by IHS under license with IEEE
No reproduction or networking permitted without license from IHS
Not for Resale

IEEE Standard Requirements for Subsurface, Vault, and Pad-Mounted Load-Interrupter Switchgear and Fused Load-Interrupter Switchgear for Alternating Current Systems up to 38 kV

1. Scope

This standard applies to enclosed assemblies of single-phase and three-phase, dead-front and live-front, subsurface, vault, and pad-mounted load-interrupter switches with or without protective devices, such as fuses or fault interrupters, up to 38 kV rated maximum voltage.

2. References

This standard shall be used in conjunction with the following standards. When the following standards are superseded by an approved revision, the revision shall apply.

AEIC CS8-2000, Specification For Extruded Dielectric, Shielded Power Cables Rated 5 Through 46 kV.[1]

ANSI C37.46-2000, American National Standard for High Voltage Expulsion and Current-Limiting Type Power Class Fuses and Fuse Disconnecting Switches.[2]

ANSI C37.47-2000, American National Standard for High Voltage Current-Limiting Type Distribution Class Fuses and Fuse Disconnecting Switches.

ANSI C37.85-2002, American National Standard for Switchgear—Alternating-Current High-Voltage Power Vacuum Interrupters—Safety Requirements for X-Radiation Limits.

[1]AEIC publications are available from the Association of Edison Illuminating Companies, 600 N. 18th Street, P.O. Box 2641, Birmingham, AL 35291-0992, USA (http://www.aeic.org). AEIC publications are also available from Global Engineering Documents, 15 Inverness Way East, Englewood, CO 80112-5704, USA (http://www.global.ihs.com/).

[2]ANSI publications are available from the Sales Department, American National Standards Institute, 25 West 43rd Street, 4th Floor, New York, NY 10036, USA (http://www.ansi.org/).

Copyright © 2003 IEEE. All rights reserved.

Copyright The Institute of Electrical and Electronics Engineers, Inc.
Provided by IHS under license with IEEE
No reproduction or networking permitted without license from IHS
Not for Resale

ANSI C57.12.26-1993, American National Standard for Pad-Mounted, Compartmental-Type, Self-Cooled, Three-Phase Distribution Transformers for Use with Separable Insulated High-Voltage Connectors (34 500 Grd Y/19 920 V and Below; 2500 kVA and Smaller).

ANSI C57.12.28-1999, American National Standard for Pad-Mounted Equipment—Enclosure Integrity.

ANSI C57.12.29-1991, American National Standard for Switchgear and Transformers—Pad-Mounted Equipment—Enclosure Integrity for Coastal Environments.

IEC 60060-1:1989-11, High-Voltage Test Techniques—Part 1: General Definitions and Test Requirements.[3]

IEC 60270:2000-12, High-Voltage Test Techniques—Partial Discharge Measurements.

IEC 60694:2002-01, Common Specifications for High-Voltage Switchgear and Controlgear Standards.

IEEE Std 4™-1995, IEEE Standard Techniques for High-Voltage Testing.[4, 5]

IEEE Std 4a™-2001, Amendment to IEEE Standard Techniques for High-Voltage Testing.

IEEE Std 386™-1995 (Reaff 2001), IEEE Standard for Separable Insulated Connector Systems for Power Distribution Systems Above 600 V.

IEEE Std 1247™-1998, IEEE Standard for Interrupter Switches for Alternating Current, Rated Above 1000 Volts.

IEEE Std 1291™-1993 (Reaff 1998), IEEE Guide for Partial Discharge Measurement in Power Switchgear.

IEEE Std C37.09™-1999, IEEE Standard Test Procedure for AC High-Voltage Circuit Breakers Rated on a Symmetrical Current Basis.

IEEE Std C37.40™-1993, IEEE Standard Service Conditions and Definitions for High-Voltage Fuses, Distribution Enclosed Single-Pole Air Switches, Fuse Disconnecting Switches, and Accessories.

IEEE Std C37.40b™-1996, IEEE Standard Service Conditions and Definitions for External Fuses for Shunt Capacitors.

IEEE Std C37.41™-2000, IEEE Standard Design Tests for High-Voltage Fuses, Distribution Enclosed Single-Pole Air Switches, Fuse Disconnecting Switches, and Accessories.

IEEE Std C37.48™-1997, IEEE Guide for Application, Operation, and Maintenance of High-Voltage Fuses, Distribution Enclosed Single-Pole Air Switches, Fuse Disconnecting Switches, and Accessories.

IEEE Std C37.60™-2003, IEEE Standard for Overhead, Pad-Mounted, Dry Vault, and Submersible Automatic Circuit Reclosers and Fault Interrupters for Alternating Current Systems Up to 38 kV.

---

[3]IEC publications are available from the Sales Department of the International Electrotechnical Commission, Case Postale 131, 3, rue de Varembé, CH-1211, Genève 20, Switzerland/Suisse (http://www.iec.ch/). IEC publications are also available in the United States from the Sales Department, American National Standards Institute, 25 West 43rd Street, 4th Floor, New York, NY 10036, USA (http://www.ansi.org).

[4]The IEEE standards or products referred to in Clause 2 are trademarks owned by the Institute of Electrical and Electronics Engineers, Incorporated.

[5]IEEE standards are available from the Institute of Electrical and Electronics Engineers, Inc., 445 Hoes Lane, P.O. Box 1331, Piscataway, NJ 08855-1331, USA (http://standards.ieee.org/).

--`,-`-`,,`,,`,`,,`---
Copyright © 2003 IEEE. All rights reserved.
Copyright The Institute of Electrical and Electronics Engineers, Inc.
Provided by IHS under license with IEEE
No reproduction or networking permitted without license from IHS
Not for Resale

IEEE Std C37.100™-1992 (Reaff 2001), IEEE Standard Definitions for Power Switchgear.

IEEE Std C57.12.32™-2002, IEEE Standard for Submersible Equipment—Enclosure Integrity.

3. Definitions

The definitions of terms contained in this standard, or in other standards referenced in this document, are not intended to embrace all the legitimate meanings of the terms. They are applicable only to the subject treated in this standard. For additional definitions, see IEEE Std C37.100-1992.[6]

A dagger (†) following a definition indicates that while the term is defined in IEEE Std C37.100-1992, the two definitions are not identical.

An asterisk (*) indicates that at the time this standard was approved, there were no corresponding definitions in IEEE Std C37.100-1992.

3.1 fused-loadbreak way*: A fused way incorporating an integral switching device operated by opening and closing a fuse assembly.

3.2 fused-switch way*: A way connected to the bus through a three-phase group-operated switch or single-phase switch in series with high-voltage fuses.

3.3 pad-mounted switchgear, subsurface switchgear, vault-fused switchgear, vault switchgear†: Refer to IEEE Std C37.100-1992. In IEEE Std C37.74-2003, pad-mounted switchgear, subsurface switchgear, vault switchgear, with or without protective devices, shall be designated simply as distribution switchgear (DSG).

3.4 protected way*: A way connected to the bus through a protective device.

3.5 subsurface switchgear: A submersible switching assembly suitable for application in a below-grade enclosure normally surface operable.

3.6 surface operable: A term indicating that the switch and its accessories are operable from above grade.

3.7 switched way†: A way connected to the bus through a three-phase group-operated switch or single-phase switch.

3.8 tapped way: A way solidly connected to the bus.

3.9 vault switchgear: A term indicating that the switch and its accessories are operable from inside a vault.

3.10 way†: A three-phase or single-phase circuit connection to the bus, which may contain combinations of switches and protective devices or may be a solid bus.

NOTE—See Figure 1 for an illustration of the definitions in Clause 3.

[6]Information on references can be found in Clause 2.

Copyright © 2003 IEEE. All rights reserved.

Copyright The Institute of Electrical and Electronics Engineers, Inc.
Provided by IHS under license with IEEE
No reproduction or networking permitted without license from IHS
Not for Resale

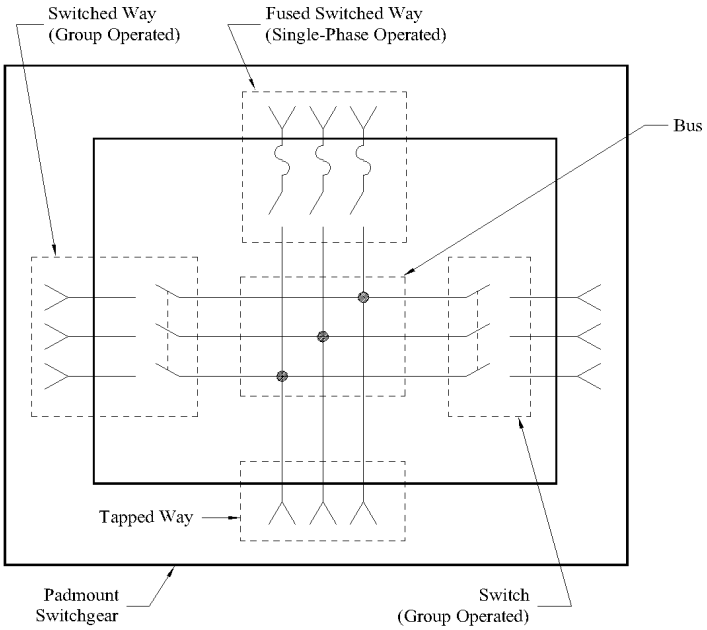

Figure 1—Example using the definitions from Clause 3 (four-way pad-mounted switchgear shown)

4. Service conditions

4.1 Usual service conditions

Apparatus conforming to this standard shall be suitable for operation at nameplate rating provided that

a) The ambient air temperature is not above 40 °C or below –30 °C.
b) The altitude does not exceed 1000 m.
c) The subsurface or vault switchgear that is installed in a below-grade enclosure is subject to occasional flooding to a depth not exceeding 3 m above the top of the switchgear.

NOTE—Fuse time-current characteristics and continuous current ratings are affected by temperature; see IEEE Std C37.48-1997.

4.2 Unusual service conditions

Unusual service conditions shall include, but are not limited to, service conditions that exceed the conditions defined in 4.1 or extremes in

a) Duty cycle or unusual frequency of operation
b) System conditions including high harmonic content currents and voltages
c) Site conditions
d) Shock, vibration, or tilting
e) Damaging fumes, vapors, or corrosive liquids
f) Excessive or abrasive dust
g) Explosive mixtures of dust or gases

Copyright © 2003 IEEE. All rights reserved.
Copyright The Institute of Electrical and Electronics Engineers, Inc.
Provided by IHS under license with IEEE
No reproduction or networking permitted without license from IHS
Not for Resale

h) Salt air or extreme humidity

i) Flooding, including long-term flooding of submersible equipment, or flooding to a level that exceeds 3 m above the top of the submersible switchgear

Unusual service conditions should be brought to the attention of the equipment manufacturer to define or prevent loss of performance or service life, if any, from specified values. Applicable standards such as standards for altitude correction should be used when available.

4.2.1 Abnormal ambient temperatures

Distribution switchgear (DSG) may be applied at higher or lower ambient temperatures than specified. However, performance may be affected, and special consideration shall be given to these applications.

4.2.2 Altitudes above 1000 m

DSG may be applied at altitudes higher than 1000 m; however, the basic impulse insulation level, rated maximum voltage, and rated continuous current may be reduced. The rated interrupting current, related required capabilities, and rated interrupting time are not affected by altitude. Altitude correction factors are being studied by the Switchgear Committee. In the meantime, users should consult the manufacturer for appropriate derating when the equipment is applied above 1000 m. Refer also to Annex B.

5. Ratings, required related capabilities, and test requirements

5.1 General

The ratings designated in this standard are preferred and are not considered restrictive. Nonpreferred ratings based on performance are acceptable under provisions of this standard when accepted by the equipment user. The ratings of the DSG are designations of operating limits under specified conditions, such as ambient temperature and temperature rise, and include ratings indicated in 5.2.

5.2 Rating information

The ratings shall include overall ratings of the DSG and ratings of individual ways. See Table 1 for preferred rated values.

5.2.1 Overall ratings

The overall ratings of DSG shall include the following:

a) Rated power-frequency

b) Rated maximum voltage

c) Rated lightning impulse withstand voltage

d) Rated power-frequency withstand voltage

e) Rated short-circuit current

5.2.1.1 Rated power-frequency

The rated power-frequency is the frequency at which the DSG and its components are designed to operate. The preferred rated power-frequencies are 50 Hz or 60 Hz.

Copyright © 2003 IEEE. All rights reserved.

Copyright The Institute of Electrical and Electronics Engineers, Inc.
Provided by IHS under license with IEEE
No reproduction or networking permitted without license from IHS Not for Resale

Table 1—Preferred voltage ratings and related test requirements

Line no.	Rated maximum voltage (kV)			Related test requirements[a]			
	Three-phase DSG		Single-phase DSG	Rated lightning impulse withstand voltage (kV)	Rated power-frequency withstand voltage (kV)[b]	Power-frequency withstand production test voltage (kV)[c]	DC withstand (5 min) (kV)[d]
	Col. 1	Col. 2	Col. 3	Col. 4	Col. 5	Col. 6	Col. 7
1	15.5	15.5 Grd-Y	8.9	95	35	34	53
2	27	27 Grd-Y	15.5	125	60	40	78
3	38	38 Grd-Y	21.9	150	70	50	103

WARNING

When performing tests involving open contacts in vacuum, adequate precautions such as shielding or distance should be used to protect test personnel against the possibility of higher X-radiation occurrences due, for example, to incorrect contact spacing or to the application of voltages in excess of the specified voltages. For example, maintaining a distance of 2 m to 3 m between the DSG and all test personnel is a typical basic precaution to reduce the risk of excess X-radiation exposure. Further discussion of shielding, adequate distances, and personnel exposure limits are found in ANSI C37.85-2002.

[a]Partial discharge is another related test requirement as specified in 6.7.7
[b]Rated lightning impulse withstand voltages in Column 4 and rated power-frequency withstand voltages in Column 5 are design test requirements.
[c]Power-frequency withstand production test voltages in Column 6 are production test requirements that may be limited by terminations.
[d]DC withstand values in Column 7 are design test values; they are not field test values.

5.2.1.2 Rated maximum voltage

The rated maximum voltage of DSG shall be the voltage of the way with the lowest rating. Three-phase DSG containing one or more ways with components rated for phase-to-ground voltage (maximum voltage divided by 1.732), such as fuses, single-phase switches, or fused-loadbreak devices, shall have the designation “Grd-Y” (grounded-wye) added to the rated maximum voltage. The application of Grd-Y rated DSG should be limited to three-phase applications where the recovery voltage during switching or fault clearing across any Grd-Y rated way(s) does not exceed the phase-to-ground voltage rating of components and the three-phase system voltage does not exceed the rated maximum voltage of the DSG.

The preferred values of rated maximum voltage are shown in Column 1, Column 2, and Column 3 of Table 1.

5.2.1.3 Rated lightning impulse withstand voltage

The rated lightning impulse withstand voltage shall be the voltage of the way with the lowest rating. The preferred values of rated lightning impulse withstand voltage are shown in Column 4 of Table 1.

Copyright © 2003 IEEE. All rights reserved.
Copyright The Institute of Electrical and Electronics Engineers, Inc.
Provided by IHS under license with IEEE
No reproduction or networking permitted without license from IHS
Not for Resale

5.2.1.4 Rated power-frequency withstand voltage

The rated power-frequency withstand voltage shall be the voltage of the way with the lowest rating. The preferred values of rated power-frequency withstand voltage are shown in Column 5 of Table 1.

5.2.1.5 Rated short-circuit withstand current and duration

The rated short-circuit withstand current shall be the lowest of the following ratings of any of the ways and shall be expressed in both short-time withstand and peak withstand current:

a) The rated interrupting current of the protective devices (if applicable)
b) The rated peak withstand and short-time current of the switches, loadbreak devices (if applicable), grounding switches (if applicable), and buses
c) The rated fault-making current of the switches, loadbreak devices, protective devices, and grounding switches (if applicable)

The relationship between the peak withstand current and short-time withstand current shall be based on a minimum peak current to root-mean-square (rms) symmetrical current ratio of 2.6 for 60 Hz and 2.5 for 50 Hz,[7] which equates to an approximate X/R of 17 for 60 Hz systems and 14 for 50 Hz systems. These figures are based on a decay time constant of 45 ms. The rated short time withstand current duration is 1 s.

NOTES

1—DSG consisting of only a single switched way and ways containing fuses may have a rated short-circuit withstand current equal to the current of the fuses, if it can be demonstrated that the switch can withstand the fault-making and peak current duty as limited by the fuses.

2—Bushings, separable connectors, terminators, or cables may not have short-circuit withstand capabilities as high as the rating of the DSG and could limit its application.

5.2.1.6 DC withstand voltage (required related capability)

The assembly shall pass a dc withstand voltage test in accordance with 6.7.8, with test values based on rated maximum voltage values in Table 1.

5.2.2 Individual way ratings

The ratings of individual ways shall be assigned as shown in Table 2.

[7]It is accepted practice in ANSI and IEC HVCB standards to use the 2.5 figure for peak current to rms symmetrical current ratio. Annex A provides actual value of 2.55.

Copyright © 2003 IEEE. All rights reserved.

Copyright The Institute of Electrical and Electronics Engineers, Inc.
Provided by IHS under license with IEEE
No reproduction or networking permitted without license from IHS Not for Resale

Table 2—Ratings of individual ways

Line no.	Rating	Switched way	Fused-switch way	Fused-loadbreak way	Fused way	Tapped way	Fault interrupter way	Grounding switch
1	Rated maximum voltage	X	X	X	X	X	X	X
2	Rated continuous current	X	X	X	X	X	X	
3	Rated load switching current	X	X	X			X	
4	Rated loop switching current	X	X	X			X	
5	Rated cable-charging switching current	X	X	X			X	
6	Rated transformer-magnetizing switching current	X	X	X			X	
7	Rated peak withstand current[a]	X	X[b]	X[b]	X[b]	X	X	X
8	Rated short-time withstand current and duration[a]	X	X[b]	X[b]	X[b]	X	X	X
9	Rated fault-making current[a]	X	X	X			X	X
10	Rated interrupting current[a]		X	X	X		X	

[a]These ratings are optional as they are covered by the overall rating of the DSG and equal or exceed the ratings of 5.2.1.5.
[b]These ratings are applicable only with a fuse shorting bar.

5.3 Continuous current ratings and related test requirements

See Table 3 and Table 4 for preferred ratings.

5.3.1 Conditions of continuous current rating

The rated continuous current is applicable under the usual service conditions defined in 4.1. Current ratings shall be based on the total temperature limits of the materials used for such parts. A temperature rise reference is given in Table 5 to permit testing at reduced ambient. Pad-mounted switchgear exposed to solar radiation shall have their ratings based on a 40 °C ambient air temperature outside the enclosure with a 15 °C solar radiation factor added. The "effective" ambient is, therefore, 55 °C. Subsurface or indoor switchgear shall have their rating based on a 40 °C ambient temperature in the vault or housing.

Copyright © 2003 IEEE. All rights reserved.
Copyright The Institute of Electrical and Electronics Engineers, Inc.
Provided by IHS under license with IEEE
No reproduction or networking permitted without license from IHS
Not for Resale

Table 3—Preferred current ratings for switched ways

Line no.	Rated maximum voltage (kV)			Rated continuous load and loop switching currents (A)[a]	Rated cable-charging switching current (A)	Rated transformer magnetizing switching current (A)	Rated rms symmetrical short-circuit withstand current (A)[b,c,d]		
	Three-phase DSG		Single-phase DSG				Class 1	Class 2	Class 3
	Col. 1	Col. 2	Col. 3	Col. 4	Col. 5	Col. 6	Col. 7	Col. 8	Col. 9
1	15.5	15.5 Grd-Y	8.9	200	10	7	12 000	N/A	N/A
2	15.5	15.5 Grd-Y	8.9	400	10	14	12 000	N/A	N/A
3	15.5	15.5 Grd-Y	8.9	600	10	21	12 000	25 000	38 000
4	27	27 Grd-Y	15.5	200	15	7	12 000	N/A	N/A
5	27	27 Grd-Y	15.5	400	15	14	12 000	N/A	N/A
6	27	27 Grd-Y	15.5	600	15	21	12 000	25 000	38 000
7	38	38 Grd-Y	21.9	200	20	7	10 000	N/A	N/A
8	38	38 Grd-Y	21.9	400	20	14	10 000	N/A	N/A
9	38	38 Grd-Y	21.9	600	20	21	10 000	20 000	38 000

[a]The test voltage for loop switching tests shall be no less than 20% of the rated maximum voltage (see 6.7.5.5).
[b]The rated short-time withstand current duration is 1 s (see 5.2.1.5).
[c]Classes in Column 7, Column 8, and Column 9 are used to designate short-circuit current levels.
[d]Short-circuit withstand current ratings may be limited by the capabilities of bushings, separable connectors, terminators, or cables used on production switches. Design tests performed to substantiate the short-circuit withstand values in this table shall be made on switches with bushings, separable connectors, terminators, and cables of adequate capability.

5.3.2 Limits of observable temperature rise

At rated current, the temperature rise above ambient and the total temperature of each of the various parts shall not exceed the values in Table 5.

5.3.3 Application of fuses

Application of fuses, particularly current-limiting fuses, subject to high ambient temperatures or producing high temperatures during normal operation, may require derating of the allowable continuous current due to time-current characteristics shift; reduction in the current required to produce element melting; or excessive total temperature of contacts, conducting joints, bushing terminals, insulation, etc. (See IEEE Std C37.48-1997.)

Copyright © 2003 IEEE. All rights reserved.

Copyright The Institute of Electrical and Electronics Engineers, Inc.
Provided by IHS under license with IEEE
No reproduction or networking permitted without license from IHS
Not for Resale

Table 4—Preferred current ratings for protected ways

Line no.	Rated maximum voltage (kV)			Rated continuous load and loop switching currents (A)[a]	Rated cable-charging switching current (A)[a]	Rated transformer magnetizing switching current (A)[a]	Rated rms symmetrical short-circuit withstand current (A)[b,c,d]		
	Three-phase DSG		Single-phase DSG				Class 1	Class 2	Class 3
	Col. 1	Col. 2	Col. 3	Col. 4	Col. 5	Col. 6	Col. 7	Col. 8	Col. 9
1	15.5	15.5 Grd-Y	8.9	200	10	7	N/A	N/A	N/A
2	15.5	15.5 Grd-Y	8.9	400	10	14	25 000	25 000	N/A
3	15.5	15.5 Grd-Y	8.9	600	10	21	25 000	25 000	38 000
4	27	27 Grd-Y	15.5	200	15	7	12 000	N/A	N/A
5	27	27 Grd-Y	15.5	400	15	14	12 000	N/A	N/A
6	27	27 Grd-Y	15.5	600	15	21	12 000	25 000	38 000
7	38	38 Grd-Y	21.9	200	20	7	10 000	N/A	N/A
8	38	38 Grd-Y	21.9	400	20	14	10 000	20 000	N/A
9	38	38 Grd-Y	21.9	600	20	21	10 000	20 000	38 000

[a]A fused way has no switching current rating; only a fused-switch way and a fused-loadbreak way have load and loop (Column 4), cable charging (Column 5), and magnetizing (Column 6) switching current ratings.
[b]The rated short-time withstand current duration is 1 s (see 5.2.1.5).
[c]Classes in Column 7, Column 8, and Column 9 are used to designate short-circuit current levels.
[d]Short-circuit withstand current ratings may be limited by the capabilities of bushings, separable connectors, terminators, or cables used on production switches. Design tests performed to substantiate the short-circuit values in this table shall be made on switches with bushings, separable connectors, terminators, and cables of adequate capability.

Copyright © 2003 IEEE. All rights reserved.
Copyright The Institute of Electrical and Electronics Engineers, Inc.
Provided by IHS under license with IEEE
No reproduction or networking permitted without license from IHS
Not for Resale

Table 5—Limits of temperature and temperature rise for various parts and materials of DSG

Nature of the part and material[a,b,c]		Total temperature (°C)	Temperature rise at ambient (°C)[d]	
			Solar radiation	
			Exposed	Not exposed
1. Material used as insulation and metal parts in contact with insulation of these classes[e]	O (90 ºC)	90	35	50
	A (105 ºC)	105	50	65
	B (130 ºC)	130	75	90
	F (155 ºC)	155	100	115
	H (180 ºC)	180	125	140
	C (220 ºC)	220	165	180
	Oil[f]	90	35	50
2. Contacts[g]	Bare copper and bare-copper alloy			
	—in air	75	20	35
	—in SF_6 (sulfurhexaflouride)	105	50	65
	—in oil	80	25	40
	Silver-coated or nickel-coated[h]			
	—in air	105	50	65
	—in SF_6	105	50	65
	—in oil	90	35	50
	Tin-coated[h]			
	—in air	105	50	65
	—in SF_6	105	50	65
	—in oil	90	35	50
3. Connections, bolted or the equivalent[i]	Bare-copper, bare-copper alloy, bare aluminum, or bare-aluminum alloy			
	—in air	90	35	50
	—in SF_6	115	60	75
	—in oil	100	45	60
	Silver-coated or nickel-coated			
	—in air	115	60	75
	—in SF_6	115	60	75
	—in oil	100	45	60
	Tin-coated			
	—in air	105	50	65
	—in SF_6	105	50	65
	—in oil	100	45	60
4. All other contacts or connections made of bare metals or coated with other materials		__ j	__ j	__ j
5. Terminals for the connection to external conductors by screws or bolts[k]	Bare-copper and bare-copper alloy	90	35	50
	Silver-coated, nickel-coated, tin-coated	105	50	65
	Other coatings	__ j	__ j	__ j
6. Metal parts acting as springs		__ l	__ l	__ l
7. External surface of enclosures	Public accessible enclosures only	60	—	—

--`,,`-`-`,,`,,`,`,,`---
Copyright © 2003 IEEE. All rights reserved.

Copyright The Institute of Electrical and Electronics Engineers, Inc.
Provided by IHS under license with IEEE
No reproduction or networking permitted without license from IHS
Not for Resale

[a]According to its function, the same part may belong to several categories as listed in this table. In this case, the permissible maximum values of total temperature and temperature rise to be considered are the lowest among the relevant categories.
[b]For sealed interrupters, the values of total temperature and temperature rise limits are not applicable for parts inside the sealed interrupter. The remaining parts shall not exceed the values of temperature and temperature rise given in this table.
[c]The temperatures of conductors between contacts and connections are not covered in this table, as long as the temperature at the point of contact between conductors and insulation does not exceed the limits established for the insulating material. For example, the temperature limits of terminals should not exceed 75 °C for HMWPE insulated cable.
[d]The maximum ambient temperature is 55 °C for equipment exposed to solar radiation and 40 °C for equipment located indoors or in subsurface vaults (see 5.4.1). The two columns under solar radiation indicate whether the DSG is exposed or is not exposed to the heating effects of solar radiation.
[e]The classes of insulating materials are given in IEC 60694:2002-01.
[f]The top oil (upper layer) temperature shall not exceed 40 °C rise or 80 °C total. The 50 °C and 90 °C values refer to the hottest spot temperature of parts in contact with oil.
[g]When contact parts have different coatings, the permissible temperatures and temperature rises shall be of the part having the lower value permitted in this table.
[h]The quality of the coated contacts shall be such that a layer of coating material remains at the contact area
After making and breaking tests (if any)
After short-time withstand current tests
After the mechanical endurance test; according to the relevant specifications for each piece of equipment. Otherwise, the contacts shall be regarded as "bare."
[i]When connection parts have different coatings, the permissible temperatures and temperature rises shall be of the part having the lower value permitted in this table.
[j]When materials other than the materials given in this table are used, their properties shall be considered in order to determine the maximum permissible temperature rises.
[k]The values of temperature and temperature rise are valid even if the conductor to the terminals is bare.
[l]The temperature shall not reach a value where the temper of the material is impaired.

6. Design tests (type tests)

Design tests are tests performed by the manufacturer to determine the adequacy of the design of a particular type, style, or model of equipment or its component parts for meeting its assigned ratings and for operating satisfactorily under normal service conditions or under special conditions, if specified. Design tests may be used to demonstrate compliance with applicable industry standards.

Design tests are not required to demonstrate a margin in excess of assigned ratings. Conformance testing to verify rated values is expected to be performed at values equal to or less than the ratings. For application purposes, the ratings are to be treated as maximum values.

6.1 General

The intention of this standard is to adequately test the DSG as an entity while recognizing the modularity of this type of apparatus. Switches, protected ways, fuses, fuse-switch combinations, and fuses with an integral loadbreak device are assembled as modules in various combinations of ways in specialized enclosures to construct a given DSG unit. The capability of the DSG to meet all of its ratings shall be demonstrated by successful tests on the entire unit and by reference to successful tests on individual ways, components, interconnections, and bus assembly that form the unit. In general, it shall not be required to repeat tests on a way or component, for example, an interrupter switch in the DSG, if it has already been tested in an equivalent enclosure.

Copyright © 2003 IEEE. All rights reserved.
Copyright The Institute of Electrical and Electronics Engineers, Inc.
Provided by IHS under license with IEEE
No reproduction or networking permitted without license from IHS
Not for Resale

The following subclauses address the test requirements:

a) 6.2: Connectors and bushing used on DSG
b) 6.3: Test requirements, unique requirements, and condition following test of the DSG as an entity
c) 6.4: Test sequence, unique requirements, and condition following test of the switched ways and protected ways including fused-switch ways
d) 6.5: Test sequence, unique requirements, and condition following test of the switching devices in fused-loadbreak ways
e) 6.6: Test sequence, unique requirements, and condition following test of the fusing devices used in fused ways, fused-switch ways, or fused-loadbreak ways
f) 6.7: Test methods for all requirements of 6.3 through 6.6

6.1.1 Condition of DSG to be tested

The DSG shall be new and in good condition.

6.1.2 Mounting of the DSG

The DSG shall be mounted in the usual service position for which it is designed.

6.1.3 Maintenance

Maintenance that could be expected to enhance subsequent design test results during the sequential testing shall not be performed on the DSG. Such maintenance includes, but is not limited to, replacing, filtering, or reconditioning the insulation medium or repairing the current-carrying contacts. Equipment repairs may be made where it can be demonstrated that such repairs would not influence the cumulative conditioning effects of previous tests in the design test sequence.

6.1.4 Power-frequency

The frequency of the supply voltage shall be the rated power-frequency (± 10%). Switching tests specified in 6.7.5 shall follow the guidelines in IEEE Std 1247-1998 with respect to the frequency of the supply voltage.

Other frequencies may be used upon agreement between the user and the manufacturer. Care should be exercised in the interpretation of the results, taking into account all significant facts such as the type of switch and the type of test performed.

6.2 Tests on connectors and bushings used on DSG

DSG sometimes use, as integral components, connectors, bushings, and terminations that are covered by other standards. All qualification testing per those standards does not need to be repeated on the DSG as long as clearances, mounting methods, and installation practices follow the appropriate standard and the manufacturer’s installation requirements.

Connectors, bushings, and terminators that are an integral part of the DSG shall be part of the DSG when the DSG is subjected to the tests of 6.3.

Copyright © 2003 IEEE. All rights reserved.

Copyright The Institute of Electrical and Electronics Engineers, Inc.
Provided by IHS under license with IEEE
No reproduction or networking permitted without license from IHS Not for Resale

6.3 Testing of DSG as an entity

6.3.1 General

The tests specified in 6.3.2 are designed to verify the overall DSG as an assembly of a combination of ways, interconnecting bus, and enclosure. Design tests on the individual ways as subassemblies or components are specified in later clauses.

6.3.2 Test requirements

The design tests in Table 6 shall be made on the DSG, including all ways (e.g., switched, protected, fused-switch, fused-loadbreak), buses, grounding switch, and interconnections as appropriate. It is not a requirement that these tests be performed on the same unit nor is it required that they be performed in the sequence shown.

Table 6—Tests requirements for DSG as an entity

Test no.	Test description	Test procedure
1	Dielectric tests	6.7.2
1a	Power-frequency withstand voltage test (Column 5 of Table 1: rated power-frequency withstand test voltage)	6.7.2.4
1b	Lightning impulse withstand voltage test	6.7.2.5
2	Continuous current test	6.7.3
3	Short-circuit current tests	6.7.4
3a	Rated peak withstand current test	6.7.4.3
3b	Short-time withstand current test	6.7.4.5
4	Partial discharge level test	6.7.7
5	DC withstand voltage test	6.7.8
6	Pressure test	6.7.9

NOTE—Ground switches do not have a continuous current rating and, therefore, do not need to be included in test sequence 2.

6.3.3 Condition of DSG following short-circuit tests

There shall be no visible damage to the DSG after the tests have been completed except for normal wear and tear due to handling and visual evidence of the device having passed current, such as slight contact markings.

When visual inspection is not feasible or there is a question regarding the condition of the device, the rating shall be considered met when the DSG and its components will withstand repeated mechanical operations without cumulative damage, be capable of carrying rated continuous current without exceeding the temperature limits specified in Table 5, and be capable of passing the power-frequency withstand production test voltage (see Column 6 of Table 1).

Copyright © 2003 IEEE. All rights reserved.
Copyright The Institute of Electrical and Electronics Engineers, Inc.
Provided by IHS under license with IEEE
No reproduction or networking permitted without license from IHS
Not for Resale

The means of showing ability to carry rated current is optional. For example, it may be accomplished by means of a dc resistance test, comparing the results to the resistance measurements taken before the short-circuit tests. It is not necessary to perform a continuous current test.

6.4 Testing of switches installed in switched ways and fused-switch ways

6.4.1 General

The design tests specified in 6.4.1 to 6.4.3 shall be performed on the same switch in the sequence listed in Table 7.

If the DSG utilizes expulsion fuse devices that alter the dielectric, then the dielectric shall be preconditioned prior to the switch testing sequence. Preconditioning shall consist of six fuse operations at rated interrupting current of the expulsion fuse according to IEEE Std C37.41-2000. These six test operations may be performed on an individual fuseholder and fuse, or they may be distributed over the fused ways installed in the DSG. These tests shall be conducted on the enclosure with the manufacturer's recommended minimum volume of insulating fluid.

For ways using interrupters that do not permanently alter the dielectric of the DSG, such as vacuum interrupters, and where it can be demonstrated that the rated power-frequency withstand voltage can be met after six fuse operations, it is not required to perform dielectric preconditioning by fuse testing as part of the sequence testing.

For DSG units that use the same loadbreak switch in both a switched way and a fused-switch way, a test of both switches in the same unit is not required.

6.4.2 Test sequence

The test sequence shall be as shown in Table 7. The switching current tests listed in Table 7 as test sequence 2 may be performed in any order, but all must be completed prior to proceeding with the mechanical tests (test sequence 3). The remainder of the tests shall be performed in the listed order.

6.4.3 Condition of switching device in switched and fused-switch ways after test sequence

The device may show visual evidence of having closed into a fault. The test sequence shall be considered met if the device

a) Continues to be mechanically operable following the mechanical operations in test sequence 8 of Table 7,
b) Is capable of carrying its rated continuous current with a stable temperature as described in 6.7.6, and
c) Is capable of passing the power-frequency withstand production test voltage (see Column 6 of Table 1).

The means of showing ability to carry rated current is optional. For example, it may be accomplished by means of a dc resistance test, comparing the results to the resistance measurements taken at the beginning of the test sequence. It is not necessary to repeat the thermal runaway test.

--`,,`-`-`,,`,,`,`,,`---
Copyright © 2003 IEEE. All rights reserved.

Copyright The Institute of Electrical and Electronics Engineers, Inc.
Provided by IHS under license with IEEE
No reproduction or networking permitted without license from IHS Not for Resale

Table 7—Test sequences for switched way, fused-switch way, fused-loadbreak way, and ground switch[a]

Test sequence no.	Test description	Switched way	Fused-switch way	Fused-loadbreak way	Grounding switch[b]	Test procedure
1	Dielectric preconditioning, when applicable	—	X	X	—	6.4.1
2	Switching current tests	—	—	—	—	6.7.5
2a	(a) Load switching current test	X	X	X	—	6.7.5.4
2b	(b) Loop switching current test	X	X	X	—	6.7.5.5
2c	(c) Cable-charging switching current test	X	X	X	—	6.7.5.6
2d	(d) Transformer magnetizing current switching test	X	X	X	—	6.7.5.7
3	Mechanical operation tests	X	X	—	X	6.7.10.1
4	Peak current withstand test	X	X	—	X	6.7.4.3
5	Fault-making	X	X	X	X	6.7.4.6
6	Rated power-frequency withstand production test voltage test (Column 6 of Table 1: production test voltage)	X	X	X	X[c]	6.7.2.4
7	Thermal runaway test	X	X	X	—	6.7.6
8	Mechanical operation test	X	X	X	X	6.7.10.2

[a]The complete sequence of design tests need not be performed on each design variation of a previously certified switch design.
[b]When the grounding switch is installed in the same environment as the switched way or the fused-switch way, it shall be tested after switching current tests of the switch or the fused-switch way.
[c]The grounding switch is required to be tested in open position only.

6.5 Testing of switching devices in fused-loadbreak ways

6.5.1 General

This subclause is intended to cover switching devices operated by opening and closing the fuse. The general comments about preconditioning (see 6.4.1) apply.

By design, the switching device will be associated with a particular type and model of fuse. Thus, the continuous current, the switching test maximum currents, and the fault-making current ratings of the device may correspond to values that accompany the maximum ampere-rated fuse, which can be used in combination with the device. The switching device is operated on an individual pole basis; therefore, single-phase tests shall be performed.

Copyright © 2003 IEEE. All rights reserved.
Copyright The Institute of Electrical and Electronics Engineers, Inc.
Provided by IHS under license with IEEE
No reproduction or networking permitted without license from IHS
Not for Resale

6.5.2 Test sequence

The test sequence is shown in Table 7 and is to be performed on the fused-loadbreak way. However, the individual interrupting tests under test sequence 2 may be performed in any sequence, depending on test facilities, but prior to the fault-making current test (test sequence 5). The complete sequence of design tests need not be performed on each design modification of a previously certified fused-loadbreak way design. The DSG manufacturer shall certify that all requirements are met, based on test history of similar units and conformance with applicable installation methods and practices.

6.5.3 Condition of switching device in fused-loadbreak ways after test sequence

The test sequence shall be considered met if the device meets the same conditions given in 6.4.3.

6.6 Testing of fusing devices used in fused ways, fused-switch ways, or fused-loadbreak ways

6.6.1 General

Fusing devices shall be rated and tested in accordance with the appropriate standard, e.g., IEEE Std C37.40-1993, IEEE Std C37.41-2000, ANSI C37.46-2000, ANSI C37.47-2000. It is not the intention to repeat the design testing on fusing devices, but rather verify that fused ways, fused-switch ways, or fused-loadbreak ways are properly designed to meet the ratings of the DSG. In particular, the continuous current rating and the dielectric capability of the way with the fuse installed shall be verified. Also, it shall be demonstrated that an interrupting operation of the fusing device will perform properly and will not degrade the integrity of the DSG.

Fusing devices shall be installed and applied, including rating adjustments because of mounting in an enclosure, per applicable standards, e.g., IEEE Std C37.48-1997, and per manufacturers' recommendations.

Proper installation is necessary to maintain dielectric withstand, continuous current, and interrupting ratings. Fusing devices shall be installed following the fuse and fuse mounting manufacturers’ instructions for clearances, both phase-to-ground and phase-to-phase including clearance for expulsion byproducts and orientation. If these instructions are not followed, additional testing in accordance with appropriate parts of the fusing device design standards shall be performed, e.g., IEEE Std C37.41-2000.

6.6.2 Test sequence

Tests on fusing devices in fused ways, fused-switch ways, or fused-loadbreak ways include dielectric withstand, continuous current, peak withstand current, and fault-making current tests.

6.6.2.1 Dielectric withstand tests

For dielectric withstand tests, the ways shall be tested in accordance with 6.7.2.

6.6.2.2 Continuous current test

The continuous current test is intended to verify the performance of a way to carry the rated continuous current and to determine whether the DSG will affect the continuous current rating of the fusing device or mounting assigned by the manufacturer and by applicable industry standards. Fusing devices and their mountings may have a reduced continuous current rating in an enclosure. The appropriate derating factors assigned by the manufacturers and applicable industry standards should be applied to determine the continuous current rating in the DSG.

--`,,`-`-`,,`,,`,`,,`---

Copyright © 2003 IEEE. All rights reserved.

Copyright The Institute of Electrical and Electronics Engineers, Inc.
Provided by IHS under license with IEEE
No reproduction or networking permitted without license from IHS Not for Resale

This test verifies the rated continuous current of the way by measuring the temperature rise of the bus and interconnections, the dielectric surrounding the fusing device, and, if applicable, contacts specified by the manufacturer. It is not necessary to measure the temperature rise of the fusing device or its mounting as long as the installation recommendations of the manufacturer are followed. The DSG shall meet the limits of observable temperature rise as specified in 5.3.1, 5.3.2, and any limits specified by the manufacturers and applicable industry standards when tested at the rated continuous current of the way.

The fused way shall be tested in accordance with 6.7.3.

6.6.2.3 Short-circuit tests

Peak withstand current and fault-making current tests shall be performed in accordance with 6.7.4.4 and 6.7.4.6.

6.6.3 Interrupting performance of fusing devices in the DSG

For three-phase DSG, one three-phase interrupting test shall be performed, and for single-phase DSG, a single interrupting test shall be performed, at the rated short-circuit current rating of the DSG following the specifications found in IEEE Std C37.41-2000 for fuses in enclosures. It is not required to perform a full sequence of interrupting tests. It is not required to perform the interrupting tests in each way containing fuses, but the test is required for each different fuse type or different mounting style.

6.7 Test methods

6.7.1 General

The test methods prescribed in 6.7.2 through 6.7.10 apply to the test sequences given in Table 6 and Table 7 as appropriate. Where reference is made to IEEE Std 1247-1998, the test methods of IEEE Std 1247-1998 will apply subject to the exceptions given in these subclauses. In the event of a conflict between IEEE Std 1247-1998 and the specifications given herein, the specifications of this standard shall prevail. Where errors in the text or figures of IEEE Std 1247-1998 are recognized, they are identified in notes.

6.7.2 Dielectric tests

6.7.2.1 Points of application of test voltage

The dielectric withstand capability of an assembly is demonstrated by subjecting it to a power-frequency and a lightning impulse test, at voltage levels equal to or greater than the levels specified in Table 1.

The dielectric withstand test shall be applied to each phase, pole, or bus individually with the mounting and adjacent poles, phases, or buses grounded and with isolating gaps in specific ways both in the open and closed position. Isolating gaps shall be tested across the open gap. Grounding switches shall be tested in the open position only.

Figure 2 shows the test arrangements for a switched, fused-switch, fused, and fused-loadbreak way. Only the open gaps used for isolation need be tested.

6.7.2.2 Withstand test voltage

All test voltages are to be corrected to standard atmospheric conditions per IEEE Std 4-1995 and IEEE Std 4a-2001.

Copyright © 2003 IEEE. All rights reserved.
Copyright The Institute of Electrical and Electronics Engineers, Inc.
Provided by IHS under license with IEEE
No reproduction or networking permitted without license from IHS
Not for Resale

Dielectric tests, points of application for ac, dc, and impulse tests									
Line no.	Device position*	Terminal connection							
		Three-phase device						Single-phase device	
		A_1	B_1	C_1	A_2	B_2	C_2	S_1	S_2
1	Closed	G	**V**	G	N	N	N	**V**	N
2	Closed	**V**	G	G	N	N	N	—	—
3	Closed	G	G	**V**	N	N	N	—	—
4	Open	G	**V**	G	G	G	G	**V**	G
5	Open	**V**	G	G	G	G	G	—	—
6	Open	G	G	**V**	G	G	G	—	—
7	Open	G	G	G	G	**V**	G	G	**V**
8	Open	G	G	G	**V**	G	G	—	—
9	Open	G	G	G	G	G	**V**	—	—
10	Open	**V**	**V**	**V**	G	G	G	**V**	G
11	Open	G	G	G	**V**	**V**	**V**	G	**V**
Connections legend: V—Connect to test voltage G—Connect to ground N—No connection required					*For fusing devices, "open" refers to "disengaged" position.				

WARNING

When performing tests involving open contacts in vacuum, adequate precautions such as shielding or distance should be used to protect test personnel against the possibility of higher X-radiation occurrences due, for example, to incorrect contact spacing or to the application of voltages in excess of the specified voltages. For example, maintaining a distance of 2 m to 3 m between the DSG and all test personnel is a typical basic precaution to reduce the risk of excess X-radiation exposure. Further discussion of shielding, adequate distances, and personnel exposure limits are found in ANSI C37.85-2002.

NOTES

1—For production test, use Line 1, Line 2, Line 3, Line 10, and Line 11.

2—Line 10 and Line 11 are used when the fusing device is appropriately removed from the mounting. In these cases, Line 4 through Line 9 need not be tested.

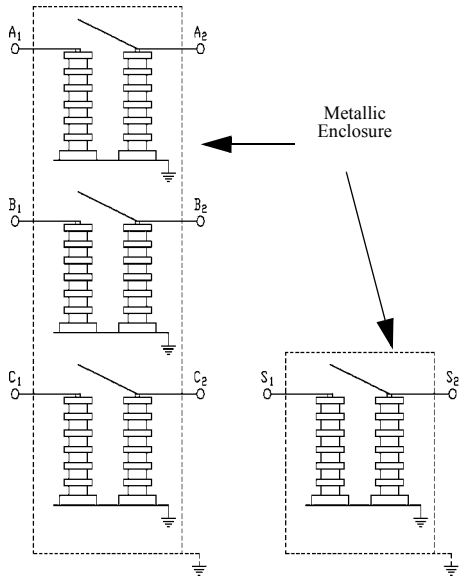

Figure 2—Connections for dielectric tests

Copyright © 2003 IEEE. All rights reserved.

Copyright The Institute of Electrical and Electronics Engineers, Inc.
Provided by IHS under license with IEEE
No reproduction or networking permitted without license from IHS
Not for Resale

6.7.2.3 Fusing devices

When fusing devices in a fused way or fused-loadbreak way are used for an isolating gap, they shall be tested across the open contacts with the fusing device disengaged and, if appropriate, removed. If the fusing device is intended to be left in the mounting in the disengaged position, then the disengaged position test shall be performed with the device in that position. If the fusing device is not intended to be left in the mounting in the disengaged position, then it is not necessary to perform the test for energized parts to ground or between poles with the fusing device in the disengaged position. Also, if the fusing device is in a fused-switch way and the switching device is intended to provide the open gap withstand, then open position testing on the fuse need not be performed.

During these tests, all metallic parts of the enclosure and mountings shall be grounded.

6.7.2.4 Rated power-frequency withstand voltage test

Power-frequency withstand test voltages shall be applied as indicated in Table 6 and Table 7 with a peak value equal to 1.414 times the test values given in Column 5 or Column 6 of Table 1 with test duration of 60 s with no disruptive discharge.

When this test is used to determine the condition of a fused-loadbreak way after short-circuit tests, only the phases tested for fault-making current need be tested for the open position withstand to ground and across the open pole with the fuse disengaged and removed if appropriate.

6.7.2.5 Rated lightning-impulse withstand voltage test

The lightning impulse withstand test voltage shall be a 1.2 × 50 μs voltage impulse in accordance with IEEE Std 4-1995. The peak value shall be as given in Column 4 of Table 1. At least three positive and three negative impulses shall be applied to the test device. If flashover occurs on only one test during any group of three consecutive tests, nine more tests of the same polarity shall be made. If the DSG successfully withstands all nine of the second group of tests, the flashover in the first group shall be considered a random flashover and the DSG shall be considered as having successfully passed the test. If an additional flashover occurs, the DSG shall be considered to have failed. An alternate test procedure described in IEC 60060-1:1989-11 may be used in which 15 impulses of each polarity are applied, with a maximum of two flashovers permitted.

The following tolerances shall apply during these tests, unless otherwise specified:

a) *Design tests*. DSG shall pass a full wave voltage impulse with
   1) A virtual front time based on the rated full wave impulse voltage equal to or less than 1.2 μs
   2) A peak voltage equal to or exceeding the peak value given in Column 4 of Table 1
   3) A time to the 50% value of the peak voltage equal to or greater than 50 μs

b) *Conformance tests*. When lightning impulse withstand voltage tests are required for conformance tests, DSG shall be capable of passing a full wave impulse voltage test series with values that do not exceed the equipment ratings and procedures as agreed to by the purchaser and the manufacturer subject to the following:
   1) Test procedures shall be in accordance with IEEE Std 4-1995.
   2) The DSG shall not be expected to withstand an impulse voltage that exceeds its rating.
   3) If, in the course of performing the conformance tests, an individual, successful withstand test is performed that meets or exceeds the requirements of item a) of this subclause, it shall be counted as a withstand. However, an unsuccessful withstand under the same conditions shall not be counted as a failure.

--`,-`-`,,`,,`,`,,`---

Copyright © 2003 IEEE. All rights reserved.
Copyright The Institute of Electrical and Electronics Engineers, Inc.
Provided by IHS under license with IEEE
No reproduction or networking permitted without license from IHS
Not for Resale

NOTE—When the interrupting medium is vacuum, an open vacuum interrupter or vacuum gap may have random sparkovers of the open vacuum interrupter as much as 25% below the rated impulse withstand voltage of the DSG. Due to the unique characteristics of vacuum interrupters, the impulse current will pass through the open contacts without damage to the interrupter unit. An impulse sparkover of the open vacuum contacts may be followed by a flow of power current that will be interrupted without damage to the DSG.

6.7.3 Continuous current test

Continuous current tests are performed to demonstrate the ability of the DSG to carry rated continuous current without exceeding the limits of total temperature and observable temperature rise as specified in Table 5.

6.7.3.1 Test conditions

The DSG shall be installed in a closed room substantially free from air currents[8] other than currents generated by heat from the DSG being tested. Each way containing unique components and buses, including switched, fused-switch, fused-loadbreak, or bus ways, shall be tested individually along with the appropriate interconnections. Current may pass through the way and exit the DSG through the bus or one or more ways. It is not a requirement to test all ways simultaneously. Testing shall be limited to ways that will be expected to attain the greatest total temperatures of components by virtue of a combination of minimum enclosed volume, minimum cooling features, and maximum heat producing components.

For ways with fusing devices, the fusing devices and mountings of the maximum current rating assigned to a way shall be used. A fuse shorting bar, if available from the manufacturer, may be used. If a fusing device at its maximum current rating produces more heat at a lower current than a shorting bar at rated continuous current, then the fusing device shall also be used for testing at the lower current.

6.7.3.2 Connections

The switch shall be tested with cables or buses of a size corresponding to the rated continuous current of the switch, and connected to the switch terminals by means of typical terminal connectors of corresponding rating. If the cables, buses, or connections are sized so that they provide a heat-sinking function for the switch terminal, the continuous current rating shall be contingent upon using similar connections in the application. Alternatively, the conductors attached to each switch terminal shall be sized to maintain a temperature rise at least equal to the limit of observable temperature rise, at rated continuous current, of the current-carrying terminal parts of the switch under test.

6.7.3.3 Test procedure

The dc resistance of the current-carrying path to be tested shall be measured and recorded before and after the continuous current test using the method in 7.1.

The continuous current test shall be made for a length of time that assures that the temperature rise of any monitored point in the assembly has not changed by more than 1 °C over a 1 h period, with readings being taken at not greater than 30 min intervals. The frequency of the test current shall not be less than the rated power-frequency of the assembly tested.

If the temperature rise after the second interval is equal to the limit of observable temperature rise (see 5.3.2) and if the temperature rise has increased since the last reading, the tests shall be continued.

[8]The phrase “substantially free from air currents” is defined as an air speed limit of 0.5 m/s measured around the test equipment before test. (See 6.5 of IEC 60694-2002-01.)

Copyright © 2003 IEEE. All rights reserved.

Copyright The Institute of Electrical and Electronics Engineers, Inc.
Provided by IHS under license with IEEE
No reproduction or networking permitted without license from IHS Not for Resale

6.7.3.4 Method of temperature determination

This measurement of temperature shall be made using devices such as thermocouples, resistance-temperature detectors, or thermometers applied to the various parts of the apparatus and controlled to minimize extraneous effects. The accuracy of said units shall be capable of resolving the temperature difference of 6.7.3.3.

6.7.3.5 Value of ambient temperature during test

The ambient temperature shall be taken as the temperature of surrounding air, which shall not be less than 10 °C nor more than 40 °C. Corrections shall not be applied for any variations in ambient temperature within this range.

6.7.3.6 Determination of the ambient temperature

6.7.3.6.1 Placing of measuring device

The ambient temperature shall be determined by taking the average of the readings of three measuring devices placed 30 cm to one side of the device and vertically located as follows:

a) One 30 cm above the ground or floor
b) One at the top level of the enclosure
c) One at a level midway between the above two positions [Item a) and Item b) of this subclause]

6.7.3.6.2 Use of oil cup

In order to avoid errors due to the time lag between the temperature of apparatus and the variations in the ambient temperature, all reasonable precautions must be taken to reduce these variations and the errors arising from these variations. Thus, when the ambient temperature is subject to such variations that error in taking the temperature rise might result, the measuring device for determining the ambient temperature shall be in a suitable liquid (such as oil) in a suitable cup.

The smallest size of oil cup employed in any case shall consist of a metal cylinder 2.5 cm in diameter and 5 cm high.

6.7.4 Short-circuit withstand current tests

The purpose of short-circuit withstand current tests is to verify that the DSG or a DSG module is capable of carrying rated short-circuit current, including its rated peak withstand current, and its rated short time withstand current for the required duration.

6.7.4.1 General

Short-circuit current ratings are expressed in symmetrical rms amperes. The asymmetrical currents during peak withstand current and fault-making current tests may be expressed in asymmetrical rms amperes and peak amperes, or only in peak amperes. Asymmetrical rms amperes shall include the dc component at the major peak of the maximum cycle as determined from the envelope of the current wave. (See Table 3 and Table 4 for preferred ratings.)

During peak withstand current and fault-making current tests, the power-frequency component of the test current shall in principle be equal to the rated symmetrical short-circuit current specified. Due to the ac current decrement in laboratories, it may not be possible to obtain the specified rated symmetrical current for the entire test duration.

Copyright © 2003 IEEE. All rights reserved.
Copyright The Institute of Electrical and Electronics Engineers, Inc.
Provided by IHS under license with IEEE
No reproduction or networking permitted without license from IHS
Not for Resale

Certain laboratory circuits may yield proper peak asymmetrical current but higher than rated symmetrical current to compensate for the ac current decrement. These circuits may be used, but it is not a requirement that the device withstand the higher symmetrical currents.

6.7.4.2 Test conditions

Conductors used in this test shall be solidly connected to the device and oriented to represent typical service conditions. Three-phase DSG shall be tested with three-phase currents, and single-phase DSG shall be tested with single-phase current. (See Figure 3.) The return path for single-phase test shall result in the most onerous test conditions. Tests may be conducted at any voltage up to the rated voltage of the switch.

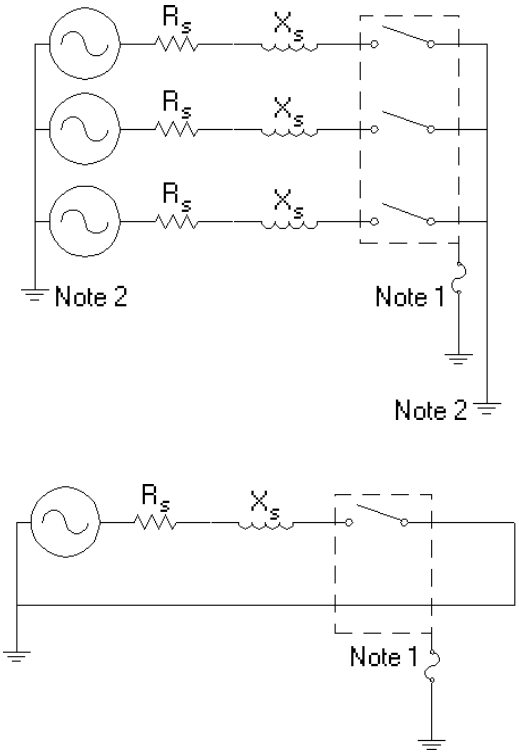

NOTES

1—All metallic parts of the enclosure and mountings shall be grounded.
2—The load or the source shall be grounded, but not both.

Figure 3—Peak withstand current, fault-closing, and short-time test circuits

Only ways, interconnections, grounding switches, and buses rated for short-circuit withstand need be tested. Fused, fused-loadbreak, and fused-switch ways should not be tested unless the DSG manufacturer rates the way with a shorting bar. Each unique way shall be tested with the interconnections and buses.

The current may pass through the way and exit the DSG through another bus or way allowing two ways and buses to be tested simultaneously.

--`,,`-`-`,,`,,`,`,,`---
Copyright © 2003 IEEE. All rights reserved.

Copyright The Institute of Electrical and Electronics Engineers, Inc.
Provided by IHS under license with IEEE
No reproduction or networking permitted without license from IHS Not for Resale

The peak withstand current test shall be performed as part of a testing sequence when specified for a particular component or way.

6.7.4.3 Peak withstand current tests for switched ways and buses

The DSG shall withstand three sets of peak withstand current tests. Each set shall include a sequence of three tests with the switch remaining in the closed position. The purpose is to simulate typical reclosing that may occur in partially overhead and underground circuits. This test is performed as part of the sequence testing for switches used in switched ways. The interval between the three sets of tests shall not be less than 10 min unless the manufacturer agrees to a shorter interval.

The test may be performed at any three-phase voltage between 50 V and the rated maximum voltage of the switch. The tests shall be performed as follows:

a) Tests shall be performed three-phase.
b) Each current surge within a set shall have a duration of not less than 10 cycles.
c) The interval between current surges for each set shall be 10 s ± 1 s.
d) The peak current shall be applied in an outer phase with the current in the other outer phase starting with a major loop.
e) The peak current of the first major loop of one phase of any period of current flow of each set shall not be less than the rated peak withstand current. (See 5.2.1.5, Table 3, and Table 4 for preferred ratings.)
f) The rms symmetrical component of the current at the 10th cycle shall not be less than the rated short-circuit withstand current.

6.7.4.4 Peak withstand current test for fused ways, fused-switch ways, and fused-loadbreak ways having shorting bars

The peak withstand current test shall be performed on new equipment, which is installed following the fuseholder manufacturer’s instructions. A shorting bar, sized for the required current, shall be installed, following the fuseholder manufacturer's recommendations.

The fused way, fused-switch way, or fused-loadbreak way shall withstand a single peak withstand current test as specified in 8.4 of IEEE Std 1247-1998, except that the peak current shall be applied in an outer phase with the current in the other outer phase starting with a major loop.

6.7.4.5 Short-time withstand current tests

The DSG should not have previously been subjected to any interrupting tests.

Three-phase DSG may be tested on a three-phase circuit or may be tested single-phase by testing two adjacent poles connected in series.

The DSG shall be subjected to a single test, as specified in 8.4 of IEEE Std 1247-1998, for the rated short-time current duration. (See Table 3 and Table 4 for preferred ratings.) For practical purposes, the current magnitude and current duration may be adjusted together to provide an integrated heating equivalent to that of the rated short-time (symmetrical) withstand current for the rated short-time (symmetrical) withstand current duration. The test duration, however, shall not be greater than 200% of the rated duration.

Copyright © 2003 IEEE. All rights reserved.
Copyright The Institute of Electrical and Electronics Engineers, Inc.
Provided by IHS under license with IEEE
No reproduction or networking permitted without license from IHS
Not for Resale

6.7.4.5.1 Short-time withstand current tests on fused ways, fused-switch ways, and fused-loadbreak ways having shorting bars

The shorting bar and fuseholder shall be assigned a short-time current rating by the manufacturer per applicable industry standards such as IEEE Std C37.40-1993 and IEEE Std C37.41-2000. The rated duration of the short-time current may be either 15 cycles or 3 s as specified in that standard, or the device may also be assigned a 1 s rated duration corresponding to the ratings in this standard. If the shorting bar used in a fuseholder is assigned a short-time current duration of 15 cycles, then this test need not be performed if the manufacturer's recommendations are followed. If a longer short-time current duration is assigned, then a short-time current test shall be performed to verify the performance of the interconnecting bus and mounting.

6.7.4.5.2 Short-time withstand current tests on automatic fault interrupters used as switches

When an automatic fault interrupter, rated in accordance with IEEE Std C37.60-2003, is used as the switching device in a switched way, the rated duration of the short-time current may be either 150% of the longest clearing time of the device at its rated short-circuit current or 1 s, as specified by the manufacturer. If rated time is 15 cycles or less, this test need not be performed if the manufacturer’s recommendations are followed.

6.7.4.6 Rated fault-making current test

Fault-making current tests shall be performed in accordance with IEEE Std 1247-1998 except that three closing operations are required on the same specimen.

6.7.4.6.1 Test conditions

Three-phase switches shall be tested with three-phase currents, and single-phase DSG shall be tested with a single-phase current. (See Figure 3.) The return path for single-phase test shall result in the most onerous test conditions.

6.7.4.6.2 Rated fault-making current test with fuses

Switches may be rated for fault-making current with a series fuse that limits the peak fault-making current or the duration of the current. When the peak fault-making current with the fuse is less than the peak associated with the rated fault-making current of a switch without the fuse, then the switch can be assigned a rated fault-making current equal to the interrupting rating of the fuse without further testing. If a switch is tested for a fault-making current rating with a fuse, then the test shall be the same as IEEE Std 1247-1998, except the duration and the peak current may be limited by the fuse, and the peak withstand current test (see 5.4.5) may be deleted. The largest fuse with the highest peak let-through current and duration shall be used. Recovery voltage across the fuse shall be maintained for a minimum of 30 cycles.

6.7.5 Switching tests

The purpose of switching tests is to verify that the switching device is capable of closing and interrupting currents within its ratings.

In the case of fused-loadbreak ways, the conditions of 6.5.1 shall apply.

6.7.5.1 Power-frequency voltage measurements

The test voltage shall be greater than or equal to the specified value in the appropriate test subclause. The voltage shall be measured across each pole of the device under test. For three-phase tests, the voltage shall be taken as the average of all three phases. No one phase shall deviate from the average by more than 10%.

Copyright © 2003 IEEE. All rights reserved.

Copyright The Institute of Electrical and Electronics Engineers, Inc.
Provided by IHS under license with IEEE
No reproduction or networking permitted without license from IHS Not for Resale

During the interrupting portion of the tests, the voltage shall be measured immediately after the last pole is interrupted. During the closing portion of the tests, the voltage shall be measured before the first pole closes.

For the interrupting portion of the tests, the inherent peak transient recovery voltage shall be greater than or equal to the value specified in Figure 3 and Table 6 of IEEE Std 1247-1998, and the time-to-peak voltage shall be less than or equal to the time specified. The transient recovery voltage shall be measured on the first pole to clear. Suitable high-frequency recording instrumentation shall be used. For load current switching, the first crest of the power-frequency recovery voltage is inherently depressed because of the transient from the load circuit; only subsequent peaks (E_1, E_2, E_3) shall be used to determine the power-frequency recovery voltage. Any dc components shall be ignored in determining power-frequency recovery voltages.

Measurements across individual pole units can be converted to an equivalent three-phase voltage by multiplying by 1.73. The rms voltage can be taken as the peak-to-peak voltage divided by 2.828, or any other means suitable for determining rms voltage may be used.

6.7.5.2 Power-frequency current measurements

The test current shall be equal to or greater than the rated current or be within the range of currents specified in the appropriate test subclause. For three-phase tests, the current shall be reported as the average of the power-frequency component of the three-phase currents, and no individual phase current shall differ from the average by more than 10%. For the interrupting portion of the tests, the current shall be measured immediately before the first pole interrupts the circuit and shall be essentially sinusoidal and substantially free of energization transients and dc offset currents. For the closing portion of the tests, the current shall be the power-frequency component measured immediately after the last pole closes.

6.7.5.3 Single-phase testing

Where single-phase testing of a switch to establish a three-phase rating is permitted, all such tests shall be performed with the other poles grounded. Testing of single-phase switches shall be under the conditions specified in the description of each test.

6.7.5.4 Load switching current tests

The switch shall be capable of switching all load currents up to and including its rated load switching currents. (See Table 3 and Table 4 for preferred ratings.) The switch shall be tested at currents and duties in accordance with Table 8.

Copyright © 2003 IEEE. All rights reserved.
Copyright The Institute of Electrical and Electronics Engineers, Inc.
Provided by IHS under license with IEEE
No reproduction or networking permitted without license from IHS
Not for Resale

Table 8—Tests duties[a]

Test type	Number of operations	Closing and opening	Ground switch	Current
	Switched ways and fused-switch ways	Fused-loadbreak ways		
Load switching	10	5	—	≥ 100% rated load
Load switching	30	—	—	40%–60% rated load
Load switching	10	5	—	5%–20% rated load
Loop switching	10	10	—	≥ 100% rated loop
Cable charging	20	5	—	≥ 100% rated cable charging
Unloaded transformer switching	20	20	—	≥ 100% rated unloaded transformer
Mechanical operations[b]	200	10	100	None (de-energized)

[a]All operations are close-open duties.
[b]Mechanical operations are tests specified following short-circuit and thermal runaway tests in Table 7 and are in addition to the mechanical operations tests specified in 6.7.10.1.

The test shall be conducted in accordance with IEEE Std 1247-1998, except as follows:

a) For three-phase tests:

$$Z_s = 10\% \text{ to } 20\% \frac{(\text{Rated Maximum Voltage})}{(\sqrt{3}\ \text{Test Current})}$$

b) For single-phase tests:

$$Z_s = 10\% \text{ to } 20\% \frac{(\text{Test Voltage for Single Phase Test})}{(\text{Test Current})}$$

c) The "Test Current" in item a) and item b) of this subclause shall be the rated load switching current of the switch.

d) The source impedance *X*/*R* shall be between 5 and 7.

e) The specified TRV shall apply for rated current tests.

f) The source side circuit shall remain constant [as in Item a) through Item d) of this subclause] for specified tests at less than rated current.

NOTE—IEEE Std 1247-1998, the delta connected circuit in Figure 1 and Figure 11 incorrectly shows the connection between the top phase load and the bottom phase load.

6.7.5.5 Loop switching current tests

The switch shall be capable of switching all loop currents up to and including its rated loop switching current. (See Table 3 and Table 4 for preferred ratings.) The switch shall be tested at the current and duty given in Table 8. The test voltage shall be no less than 20% of the rated maximum voltage.

Copyright © 2003 IEEE. All rights reserved.

Copyright The Institute of Electrical and Electronics Engineers, Inc.
Provided by IHS under license with IEEE
No reproduction or networking permitted without license from IHS Not for Resale

6.7.5.6 Cable-charging switching current test

The switch shall be capable of switching cable-charging currents up to its rated cable-charging switching current. (See Table 3 and Table 4 for preferred ratings.) The test shall be performed in accordance with IEEE Std 1247-1998, except that only shielded cable conditions are required where $C_1 = C_0$. (See Figure 7 and Figure 8 of IEEE Std 1247-1998.) The switch shall be tested at the current and duty given in Table 8.

The use of laboratory test circuits for verification of the rated cable charging switching current is an appropriate simulation of field performance if the switch is restrike-free. Currently available laboratory circuits may be used to demonstrate the interrupting performance for restriking devices, but they may not fully simulate field switching performance, especially in producing realistic field overvoltages when restriking occurs. For laboratory tests, the cables may be simulated by artificial circuits with lumped elements consisting of capacitors, reactors, and resistors. (See Figure 7 and Figure 8 of IEEE Std 1247-1998.)

Overvoltages caused by restriking in the laboratory may be substantially greater than overvoltages experienced in the field.

NOTE—Figure 7 of IEEE Std 1247-1998 is incorrectly labeled as a single-phase test circuit; it is a three-phase test circuit. Furthermore, the test circuit should not have a ground at the wye point.

6.7.5.7 Unloaded transformer switching current test

The switch shall be capable of switching all unloaded transformer currents up to and including its rated unloaded transformer current rating. (See Table 3 and Table 4 for preferred ratings.) The tests shall be in accordance with IEEE Std 1247-1998. The switch shall be tested at the current and duty given in Table 8.

6.7.6 Thermal runaway test

The purpose of the thermal runaway test is to verify that the switch, after being subjected to Test 1 through Test 6 of 6.4.2, will operate at a stable temperature while carrying rated continuous current.

Test conditions and procedures shall be the same as for the continuous current test (see 6.7.3). SF_6 switches shall not be opened nor the SF_6 gas and byproducts released before thermal runaway tests. The switch shall have passed this test if the temperature rise stabilizes as indicated by consecutive readings at 30 min intervals. The limits of observable temperature rises of Table 5 may be exceeded.

NOTES

1—The thermal runaway test requires that thermocouples and leads be installed at various points of the switch blades, contacts, bus bars, etc. It may be necessary to untank, partially disassemble and reassemble, drill holes for thermocouples, etc., before or after the thermal runaway test. It shall be understood that such work does not constitute maintenance.

2—For switch construction that makes disassembly difficult (e.g., welded construction), it is sufficient to measure the temperature stability of accessible connections and compare these points to like points from the design test.

6.7.7 Partial discharge (corona) tests

Partial discharge tests shall be performed on all DSG units that use a nonrestoring dielectric as the primary insulation (e.g., solid dielectric). These tests shall be performed in accordance with IEEE Std 1291-1993. The minimum detection sensitivity for which these tests are conducted shall be 10 pC.

Copyright © 2003 IEEE. All rights reserved.
Copyright The Institute of Electrical and Electronics Engineers, Inc.
Provided by IHS under license with IEEE
No reproduction or networking permitted without license from IHS
Not for Resale

6.7.7.1 Test voltages and limits

The test voltage shall be 105% of the line-to-ground voltage corresponding to the rated maximum voltage of the DSG. DSG equipment having two or more voltage ratings shall be tested on the basis of the highest voltage rating given on the nameplate.

Partial discharge limits have not been established. The purpose of this design test is to establish a standard test procedure and gather benchmark data for the use of both producers and users of the equipment. It is anticipated that these data will provide guidance for future revisions to the standard.

NOTE—There is general agreement that partial discharge testing should be performed on all DSG where the primary insulating system may be subject to deterioration due to partial discharge. At a minimum, the data will help to monitor process consistency by the producer and serviceability for the user. Three reasons have been given for not setting partial discharge test limits at this time: First, there is not a sufficient body of evidence to establish a cause-effect relationship between partial discharge and performance in DSG. Second, there is not an agreement about what the limits should be. Third, appropriate values will depend on the materials, design, and complexity of the equipment. Partial discharge limits at the test voltage specified in 6.7.1 have been suggested in the 10 pC to 20 pC range for a phase or module tested alone. At the upper end, a partial discharge limit of 100 pC has been recommended for a complete three-phase assembly. The 100 pC value is consistent with CSA C22.2 No. 31-1989 [B2][9].

6.7.7.2 Conditioning of test sample

The surface of insulators should be clean and dry. The test object should also be at ambient temperature. Mechanical, thermal, or electrical stressing before the test should be avoided.

6.7.7.3 Test equipment and procedure

The equipment and general method used in making partial discharge measurements tests shall be in accordance with the recommendations of IEEE Std 1291-1993 or IEC 60270:2000-12.

Tests shall be made with the DSG or test module in the closed and open positions. All surfaces that are normally grounded shall be grounded and all surfaces isolated that are normally isolated.

NOTE—An open gap in a vacuum interrupter may have field emission from rough spots on the cathode contact during partial discharge tests. This emission is not likely to distort the test results at the voltage level specified in 6.7.7.1. However, even at this voltage, and especially at higher voltage levels, field emission currents may lead to erroneous conclusions about the presence of partial discharge in solid insulation parallel to the vacuum gap. Because field emission is observed only on a cathode, the observation of asymmetrical results with respect to voltage polarity when a dc voltage is applied is then an indication of the presence of field emission in a vacuum gap instead of a partial discharge in the parallel solid insulation.

6.7.7.4 Modular tests

Testing of individual switch or interrupter units and insulated conductor modules shall be permitted where it can be shown that voltage stresses are unchanged from stresses that would exist in a completely assembled DSG. For example, the presence of a grounded tank, enclosure, or mounting frame may significantly alter the test results.

6.7.8 DC withstand voltage test

The purpose of the dc withstand voltage test is to verify that the DSG is capable of withstanding the dc test voltages that may be applied to installed cable systems. It is a related required capability (see Figure 2).

[9]The numbers in brackets correspond to the numbers of the bibliography in Annex C.

Copyright © 2003 IEEE. All rights reserved.

Copyright The Institute of Electrical and Electronics Engineers, Inc.
Provided by IHS under license with IEEE
No reproduction or networking permitted without license from IHS Not for Resale

6.7.8.1 Test procedure

The rated dc 5 min withstand voltage of negative polarity shall be applied to the DSG to the test points given in Figure 4. The voltage shall be raised gradually to the specified test voltage (see Column 7 of Table 1) and maintained at that voltage for 5 min at which time the voltage shall be lowered gradually to zero. During the test, the metallic enclosure and all un-energized terminals shall be grounded.

6.7.8.1.1 Acceptance/failure criteria

The dc power source for the dc withstand test shall be capable of supplying a minimum of 10 mA before tripping out on overload. The test shall be considered to have failed if there is

a) A leakage current of more than 10 mA, or
b) The test device is unable to withstand the voltage.

The test shall be considered to have passed if the test device withstands the test voltage with a leakage current that does not exceed 10 mA.

NOTE—These test criteria recognize the likelihood that a small leakage current may pass through an insulating medium or across an insulating surface while still supporting the high dc voltage. The possibility of such a small leakage current is particularly true of vacuum interrupters.

6.7.9 Sealed test pressure tests

The purpose of the sealed test pressure test is to verify that DSG with sealed tanks will withstand pressure and remain operable when subjected to a positive and a negative pressure. The positive pressure may result from the operation of the switch or fuse (e.g., temperature rise, current interrupting, fault-closing); the negative pressure may result from flooding of vaults and enclosures where applicable.

6.7.9.1 Internal pressure test procedure

For the internal pressure test, the DSG shall be pressurized to the maximum operating pressure conditions expected during maximum temperature, altitude, etc., as specified herein. The tank shall not deform sufficiently to impair operation of the switch or alignment of separable fuse contacts or impair the integrity of the liquid or gas seals.

6.7.9.2 External pressure test

For the external pressure test, the internal pressure shall be reduced 35 kPa gauge[10] below the minimum operating pressure of the DSG. The tank shall not deform sufficiently to impair operation of the components. The 35 kPa gauge corresponds to approximately a 3 m head of water above the top of the DSG.

6.7.10 Mechanical operations tests

The purpose of the mechanical operations test is to verify that the DSG module will open and close properly without maintenance or replacement of any parts or components following the specified tests in the sequence.

6.7.10.1 Mechanical operations tests following switching tests

The DSG module shall be subjected to 50 mechanical de-energized close-open operations following the switching tests. This requirement does not apply to ground switch modules.

[10]A pressure of 35 kPa is equivalent to 5 psi.

--`,,`-`-`,,`,,`,`,,`---
Copyright © 2003 IEEE. All rights reserved.
Copyright The Institute of Electrical and Electronics Engineers, Inc.
Provided by IHS under license with IEEE
No reproduction or networking permitted without license from IHS
Not for Resale

6.7.10.2 Mechanical operations tests following short-circuit and thermal runaway tests

The DSG module shall be subjected to mechanical de-energized close-open operations following the short-circuit and thermal runaway tests. The duty shall be as given in Table 8 and is in addition to the mechanical operations specified in 6.7.10.1 where applicable.

7. Production tests (routine tests)

Production tests are tests made to check the quality and uniformity of the workmanship and materials used in the manufacture of DSG. The DSG shall meet the production tests described in 7.1 through 7.4. Production tests shall be performed on every completely assembled DSG.

7.1 Circuit resistance test

The purpose of the circuit resistance test is to verify that all DSG contacts have been properly aligned and current transfer points have been properly assembled.

The dc resistance of the current-carrying circuit from terminal to terminal of each pole unit in the closed position shall be measured with a current of 100 A but not exceeding 20% of the rated continuous current of the way. The resistance shall not exceed the limit specified by the manufacturer. Tests through fused ways or fused-loadbreak ways may be performed with a shorting bar in place of the fuse.

7.2 Power-frequency withstand voltage test

The power-frequency withstand voltage tests shall be performed in accordance with 6.7.2.4 at the production power-frequency withstand voltage test voltage (see Column 6 of Table 1).

7.3 Partial discharge test

Partial discharge tests shall be performed on all DSG units that use a nonrestoring dielectric as the primary insulation (e.g., solid dielectric). Tests shall be performed as specified in 6.7.7 except that modular testing of components is permitted in all cases. The manufacturer shall establish the appropriate test limits for each test object.

7.4 Leak test

A DSG in a sealed tank shall be tested to verify that there are no measurable leaks that will impair the dielectric integrity of the DSG during its service life. Each assembled switch shall be tested to verify that it does not leak by pressurizing it to 50 kPa gauge[11] or its maximum operating pressure, whichever is greater, for at least 24 h without any detectable leaks. Time may be reduced by use of any equivalent test, such as pressurizing the switch to the appropriate value and applying a soap solution, alcohol, and chalk, or pressurizing the switch with a detector gas and using a suitable leak detector.

7.5 Operating tests

Each switch shall be operated and tested to verify the following:

a) The switch position indicators and contacts are in the correct position for both the open and closed positions.

[11] A pressure of 50 kPa is equivalent to 7.1 psi.

Copyright © 2003 IEEE. All rights reserved.

Copyright The Institute of Electrical and Electronics Engineers, Inc.
Provided by IHS under license with IEEE
No reproduction or networking permitted without license from IHS Not for Resale

b) The insulating medium quantity indicator (if provided) is functioning properly.
c) The circuit configuration is shown correctly, and the fuses are connected properly.
d) The fuses fit in the holders or mountings.
e) The mechanical interlocks, if required, are in place and operative.
f) The position and polarity of current transformers, if applicable.

8. Field tests on units in service, including dc withstand tests on cables

Field testing of a DSG is not considered to be a design test. Field testing is performed to determine the condition of the equipment after shipment, service, or maintenance. When these tests are performed, the recommended dielectric test levels shall not exceed 75% or 80% of rated values given in Table 1 and only when the DSG is completely isolated from all system voltages. The use of a test voltage that is lower than the design test voltage reduces the risk of damaging the equipment while performing the test. Radio influence voltage and partial discharge voltage tests may be performed at voltage test levels up to 105% of the line-to-ground voltage corresponding to the rated maximum voltage of the recloser/fault interrupter.

NOTE—IEC practice is to test at 80% of the values given in Table 1. Users may use this higher test level if permitted by the manufacturer of the equipment. In an effort to harmonize with IEC, it is expected that the manufacturers will adopt the 80% level by revision of their equipment maintenance manuals.

An ac withstand test is one commonly used method to evaluate the insulation integrity of a DSG. An ac test provides one acceptable assessment of the insulation integrity of all kinds of insulation, including open switches and interrupters of oil, gas, and vacuum designs. DC withstand tests are often used as a substitute when an ac tester is not available. When using a dc withstand test to check the integrity of a vacuum interrupter, both voltage polarities must be applied because a measurable leakage current in only one polarity can be mistaken for an indication of a vacuum interrupter in poor condition. If the leakage current is markedly higher in one polarity over the other polarity, it is likely that field emission is occurring on a rough spot on the contact that is a cathode when that voltage polarity is applied. For this reason, ac is the preferred method of testing the integrity of a vacuum interrupter.

A dc withstand test for new DSG is specified as a related design test recognizing that the equipment may be subjected to dc voltage when connected to cable. This related dc withstand test is a significant overvoltage, approximately equal to the peak value of the related power-frequency withstand voltage; and it may be near the flashover limit of the insulation or across an isolating gap. All buses or ways not undergoing tests are de-energized and grounded during these design tests. The dc withstand capability of DSG may degrade in service because of aging, contamination, and electrical or mechanical damage.

In-service dc testing of cables is performed to determine their condition and to locate faults. DSG may also be subjected to the dc test voltages if the cables are connected to the gear. The industry standards, AEIC CS8-2000, describe such cable testing. DC testing also includes cable “thumping,” i.e., the sudden application of dc voltage with substantial energy for fault locating, which causes transients and voltage doubling at the end of the open cable. These same transients can stress the DSG at higher voltages. Tests of cables with very low frequency voltages are also now being used.

WARNING

When a cable connected to a DSG is to be subjected to dc tests, it is recommended that the DSG be isolated from all source voltages to provide for the maximum safety of maintenance personnel and equipment. The recommendations of the manufacturers of DSG, dc test equipment, voltage transformers, surge arresters, and terminators, connectors, and bushings should be followed.

Copyright © 2003 IEEE. All rights reserved.
Copyright The Institute of Electrical and Electronics Engineers, Inc.
Provided by IHS under license with IEEE
No reproduction or networking permitted without license from IHS
Not for Resale

9. Construction requirements

9.1 Grounding provision

Means shall be provided for attaching a ground conductor for each way using a 1/2 in or 12 mm fastener. Such means shall be welded to the tank or enclosure and shall be capable of carrying the rated short-time current for the rated short-time current duration.

If a threaded hole is provided, the preferred thread size shall be 1/2 in 13 UNC hole with a minimum depth of 11.1 mm.

9.2 Manual operating provisions

The direction of operation of manual operating handles shall be apparent. Handles should turn clockwise to close and counter-clockwise to open, or in to close and out to open. The force required to operate a handle shall be such that one person in a standing position can readily operate it.

The switch mechanism shall be designed so that operation does not require any special skills and the closing and opening speeds of the contacts are independent of the speed at which the operating handle is operated.

Manual operating handles shall be capable of being padlocked in the open, closed, and ground positions, when provided.

Manual operating handles located within cable terminating compartments shall be operable with standard live-line tools.

Manual operating handles on submersible switches shall be located where they can be operated from the surface with both standard live-line tools and lanyard. The force required to operate handles shall be such that one person in a standing position can readily operate it without standing directly over the switch.

9.3 Position indicators

All ways with operating handles (e.g., switches, interrupters) shall be provided with position indicators or other suitable means that clearly and positively indicate the open, closed, and ground positions when provided. Indicators shall be visible to operating personnel. If colors are used to indicate position, red shall signify closed and green open, with the words *Open* and *Closed* in contrasting colors. If subject to submersion, raised or engraved corrosion-resistant lettering shall be used.

9.4 Insulating medium quantity indicators

Where liquid or gas (except air) is used as the insulating medium, provision shall be made for personnel to readily determine the insulating liquid level or insulating gas pressure with the switch energized. Indicator markings shall show the safe operating levels or pressures over the temperature range specified in 4.1. Procedures or devices that require exposing the insulation medium to the outside environment are not acceptable.

9.5 Drain and replacement provision

Where liquid or gas is used as the insulating medium, provision shall be made to replace the insulating medium with the unit de-energized.

Copyright © 2003 IEEE. All rights reserved.

Copyright The Institute of Electrical and Electronics Engineers, Inc.
Provided by IHS under license with IEEE
No reproduction or networking permitted without license from IHS Not for Resale

9.6 Sampling and adding provisions

When liquid is used as the insulating medium, provision shall be made to obtain a bottom sample with the unit energized.

Provisions shall also be made to add insulating medium, liquid or gas, with the unit energized.

9.7 Parking stands

When specified by the user, parking stands shall meet the requirements of ANSI C57.12.26-1993.

9.8 Bushings

Bushings shall accommodate cable terminations in accordance with IEEE Std 386-1995 and shall be designated and legibly marked adjacent to each bushing.

9.9 Enclosure construction—submersible and pad-mounted equipment

Tanks, cabinets, and all appurtenances shall be made of corrosion-resistant material or provided with an impact and corrosion-resistant finish. Equipment shall be suitable for storage in uncovered areas.

No external portion of the equipment shall trap water.

Lifting lugs shall be provided and positioned so that the equipment will remain level when lifted. The lugs shall be designed and located to avoid interference between lifting slings and any attachments, such as bushings and operating handles, and to avoid scratching or marring the finish during handling.

9.10 Enclosure construction—pad-mounted equipment

Pad-mounted enclosures shall meet the security requirements of 8.7.2 of ANSI C57.12.28-1999. Pad-mounted equipment shall be constructed so that it can be lifted into place on the pad without disturbing the entrance cables.

All cable terminating compartment access doors shall have padlocking provisions. Unless otherwise specified, these access doors shall also have pentahead bolt securing features as shown in ANSI C57.12.28-1999. Compartment doors shall have a positive means of latching in the open position and to the extent practical should be large enough to facilitate working in the equipment. Pad-mounted equipment enclosure coating systems shall meet the requirements of ANSI C57.12.28-1999.

9.11 Nameplate

Nameplates of stainless steel or other corrosion-resistant material shall be provided. They shall be attached to the tank or interior compartment in a manner that is resistant to all anticipated environmental conditions for the expected life of the DSG. All letters, schematics, and numbers shall be stamped, embossed, or engraved on the nameplate.

One or more nameplates for the complete equipment shall contain at least the following:

a) The words describing the equipment, e.g., “pad-mounted fused switch,” “subsurface switch”
b) Name of manufacturer and type designation
c) Model, style, and catalog number, if any

Copyright © 2003 IEEE. All rights reserved.
Copyright The Institute of Electrical and Electronics Engineers, Inc.
Provided by IHS under license with IEEE
No reproduction or networking permitted without license from IHS
Not for Resale

d) Unique serial number
e) Date of manufacture (month and year), e.g., 9/99
f) Rated maximum voltage
g) Rated power-frequency
h) Rated lightning impulse withstand voltage [e.g., basic insulation level (BIL)]
i) Rated power-frequency withstand voltage
j) Rated short-circuit current
k) Total weight with insulating medium
l) Type and quantity of insulating medium
m) Three-line terminal oriented schematic diagram using standard symbols

NOTE—A one-line diagram is acceptable if the location and identification of each terminal is obvious and readily apparent.

9.12 User identification plate

When specified by the user, space and provision shall be made to attach a user identification plate adjacent to each operating handle and fuse way. Dimensions of this plate are shown in Figure 4.

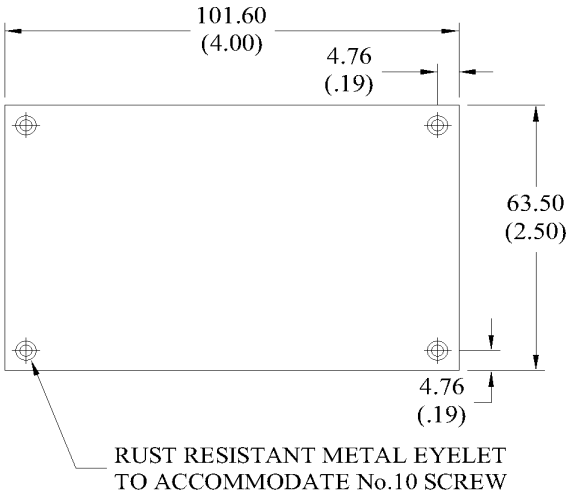

Figure 4—Outline for user identification plate

Copyright © 2003 IEEE. All rights reserved.

Copyright The Institute of Electrical and Electronics Engineers, Inc.
Provided by IHS under license with IEEE
No reproduction or networking permitted without license from IHS
Not for Resale

10. Shipping requirements

The DSG shall be completely assembled. Unless otherwise agreed to by the manufacturer and user, include the correct amount of insulating/interrupting medium considering appropriate correction for temperature.

Instructions and checklists for inspection, installation, and operation of the DSG shall be provided.

The DSG shall be properly packaged and braced to prevent damage during shipment.

Copyright © 2003 IEEE. All rights reserved.
Copyright The Institute of Electrical and Electronics Engineers, Inc.
Provided by IHS under license with IEEE
No reproduction or networking permitted without license from IHS
Not for Resale

Annex A

(informative)

X/*R* ratios

A general understanding of circuit time constant (τ_{cc}) and *X*/*R* ratio and associated peak currents is necessary for the proper design, testing, and application of switchgear. The mechanical stresses associated with fault withstand or fault-making are in relation with the square of the peak current (i_p^2); and the thermal stress associated with pre-arcing or fault current interruption is a complex relation of the arc voltage, the arcing time, and the total charge (integral of the arcing current).

A.1 Time constant (τ_{cc}) and *X*/*R* ratio

An electrical circuit may be defined by its main series components that are the inductance (*L* or *X*) ($X = 2\pi fL$) and resistance. The circuit time constant is defined by the ratio *L*/*R*. The *X*/*R* ratio is frequency dependent, i.e., a time constant of 45 ms will lead to an *X*/*R* ratio of 17 at 60 Hz and 14.1 at 50 Hz.

For a three-phase fault, the direct components of the circuit shall be considered ($\tau_{cc} = L_1/R_1$, $X/R = X_1/R_1$). For a phase-to-ground fault, the direct and zero sequences components shall be considered ($\tau_{cc} = [2L_1 + L_0]/[2R_1 + R_0]$, $X/R = [2X_1 + X_0]/[2R_1 + R_0]$)

where

R_0 is the zero sequence resistance,
R_1 is the positive sequence resistance,
L_0 is the zero sequence inductance,
X_0 is the zero sequence reactance,
L_1 is the positive sequence inductance,
X_1 is the positive sequence reactance.

A.2 Asymmetrical fault current

The maximum asymmetrical current is associated with a fault initiation at zero voltage. This may be associated with lightning flashover or with a switch or a breaker closing or reclosing on a faulted circuit or a temporary ground. If a three-phase switching device is used, an asymmetrical fault current will occur in one of the phases, the value of which will be between 87% and 100% of maximum asymmetrical current.

The instantaneous current of a single-phase circuit will be in accordance with Equation (A.1):

$$i = \sqrt{2}I[\sin(\omega t + \phi - \theta) + \sin(\theta - \phi)e^{-t/\tau_{cc}}] \quad \text{(A.1)}$$

where

i is the instantaneous current,
I is the rms value of the current,
ω is the angular frequency ($2\pi f$),
θ is the phase angle = $\tan^{-1}(X/R)$,
ϕ is the angle between voltage zero and time that fault is initiated,
t is the time,

Copyright © 2003 IEEE. All rights reserved.

Copyright The Institute of Electrical and Electronics Engineers, Inc.
Provided by IHS under license with IEEE
No reproduction or networking permitted without license from IHS Not for Resale

τ_{cc} is the circuit time constant (L/R or $X/R\omega$) (see A.1).

The peak asymmetrical current (i_p) is the maximum of this formula. The peak factor is i_p/I. The rms factor can be calculated using Equation (A.2):

$$rms\ factor = \sqrt{1 + (\sqrt{2}e^{-t_p/\tau_{cc}})^2} \quad \text{(A.2)}$$

where

t_p is time to the peak or the time to maximum of Equation (A.1).

Table A.1 is a tabulation of the peak factor and the rms factor for both 50 Hz and 60 Hz over a range of time constants.

Table A.1—*X*/*R* ratios: peak factors and rms factors

Time constant [τ_{cc}] (ms)	*X*/*R* ratios		Peak factor [i_p/I]		rms factor	
	at 60 Hz	at 50 Hz	at 60 Hz	at 50 Hz	at 60 Hz	at 50 Hz
10.6	4.0	3.3	2.09	2.01	1.21	1.16
21.2	8.0	6.7	2.38	2.31	1.39	1.35
31.8	12.0	10	2.51	2.46	1.49	1.45
45	17.0	14.1	2.59	2.55	1.55	1.52
60	22.6	18.9	2.65	2.61	1.59	1.56
90	33.9	28.3	2.70	2.68	1.63	1.61
120	45.3	37.7	2.73	2.72	1.66	1.64
150	56.6	47.1	2.75	2.74	1.67	1.66

Copyright © 2003 IEEE. All rights reserved.
Copyright The Institute of Electrical and Electronics Engineers, Inc.
Provided by IHS under license with IEEE
No reproduction or networking permitted without license from IHS
Not for Resale

Annex B

(informative)

Altitude correction factors

B.1 Introduction

Altitude correction factors have been removed from this standard due to the current controversy regarding their use, particularly in the range of sea level to 1000 m. Altitude correction factors are being studied by the Switchgear Committee and will be adopted by issuance of a supplement or revision to this standard when they are approved. At that time, this informative annex will be removed. The following information presents the altitude correction factor proposal from the initial draft of IEEE PC37.100.1 [B6]. The information is provided for reference only.

B.2 Altitude correction factors

Most switchgear is tested with reference to normal temperature and pressure (NTP) at sea level (25 °C, 298 °K, and 101.3 kPa, 1.013 mbar). An added safety factor allows normal use at altitudes up to 1000 m. For installation of switchgear, rated for up to 1000 m, at altitudes above 1000 m, the insulation level of external insulation under the standardized reference atmospheric conditions shall be determined by multiplying the insulation withstand voltages by a factor *K*.

There is no requirement to confirm the test at the required altitude.

- The factor *K* for the required increase in insulation withstand rating for equipment already rated for up to 1000 m is $K = e^{(M(H - 1000)/8150)}$.
- The factor *K* for the required decrease in insulation withstand rating for equipment already rated for up to 1000 m is $K = (1/K_{1000\ m})$ in accordance with Figure B.1 and Table B.1.

NOTES

1—Switchgear rated for up to 1000 m will also be capable of higher withstand voltage when used at less than 1000 m.

2—For insulation not exposed to ambient atmospheric pressure, the dielectric characteristics are identical at any altitude and no special precautions need to be taken.

3—For low-voltage auxiliary and control equipment, no special precautions need to be taken if the altitude is 2000 m or less. For higher altitude, see IEEE Std C37.20.1™-2002 [B3].

Figure B.1 is based on the following:

$M = 1$ for power-frequency, lightning impulse, and phase-to-phase switching impulse voltages.
$M = 0.9$ for longitudinal switching impulse voltage.
$M = 0.75$ for phase-to-ground switching impulse voltage.

Copyright © 2003 IEEE. All rights reserved.

Copyright The Institute of Electrical and Electronics Engineers, Inc.
Provided by IHS under license with IEEE
No reproduction or networking permitted without license from IHS
Not for Resale

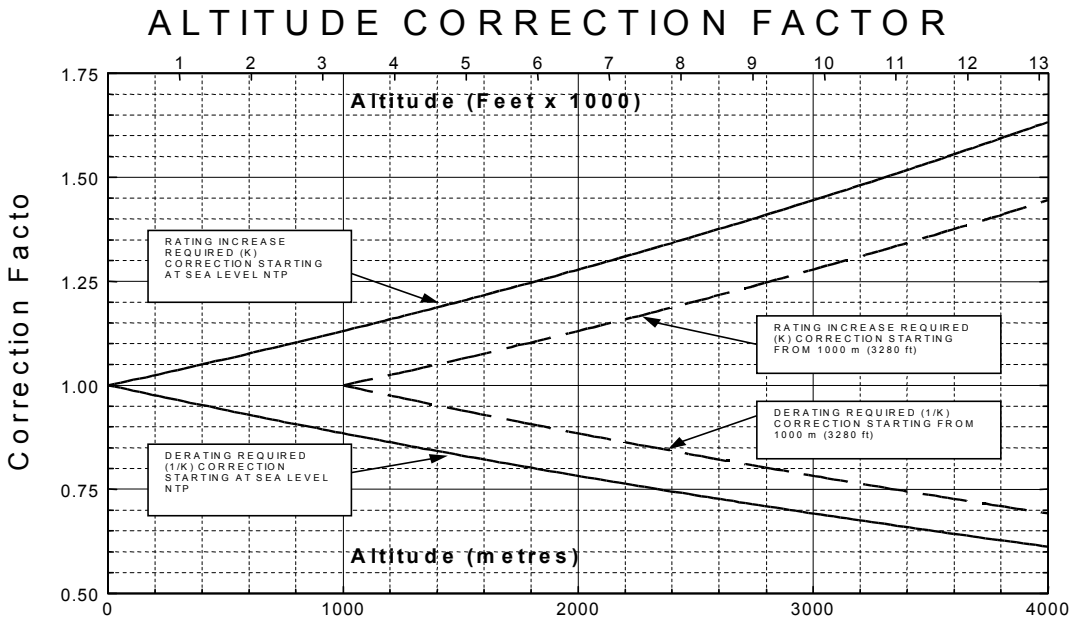

Figure B.1—Altitude correction factors

Table B.1—Correction factors

For correction factor starting at 1000 m	For correction factor starting at sea level
$k = e^{M(H-1000)/8150}$	$k = e^{M(H)/8150}$
H = altitude (meters) M = 1 for power-frequency, lightning impulse, and phase-to-phase switching impulse voltages M = 0.9 for longitudinal switching impulse voltage M = 0.75 for phase-to-ground switching impulse voltage	

B.3 Examples for switchgear with 110 kV/BIL already rated for 1000 m

Example 1: The required increase in voltage withstand for installation at 2000 m

$$K_{1000\ \mathrm{m}} = e^{M(H-1000)/8150} \tag{B.1}$$

where

e is 2.7183,
M is 1,
H is 2000.

$$K_{1000\ \mathrm{m}} = 2.7183^{1(2000-1000)/8150} = 1.131 \text{ correction factor} \tag{B.2}$$

1.131 × 110 kV = 124.4 kV BIL, indicating 125 kV BIL equipment should be chosen for the required 110 kV BIL equivalent at 2000 m.

Copyright © 2003 IEEE. All rights reserved.
Copyright The Institute of Electrical and Electronics Engineers, Inc.
Provided by IHS under license with IEEE
No reproduction or networking permitted without license from IHS
Not for Resale

Example 2: The decrease in voltage withstand when installed at 2000 m for equipment rated 110 kV BIL at 1000 m

$$1/K_{1000\ m} = 1/1.131 = 0.884 \text{ correction factor} \quad \text{(B.3)}$$

0.884 × 110 kV BIL = 97.3 kV (an 11.6% reduction of safety factor).

B.4 Examples for switchgear ratings based on 110 kV BIL withstand tests referred to sea level NTP without adjustment for 1000 m

Example 3: The required increase in voltage withstand for installations at 2000 m

$$K_{NTP} = e^{M(H)/8150} \quad \text{(B.4)}$$

$$K_{NTP} = 2.7183^{1(2000)/8150}$$

K_{NTP} = 1.278 correction factor; required equivalent increase

1.278 × 110 kV = 140.6 kV BIL required equivalent for 2000 m when tested at sea level NTP without 1000 m safety factor.

Example 4: The decrease in voltage withstand at 2000 m for 110 kV BIL equipment tested at sea level

$$1/K_{NTP} = 1/1.278 = 0.782 \text{ correction factor} \quad \text{(B.5)}$$

0.782 × 110 kV = 86.1 kV BIL (a reduction of 21.8% safety factor from sea level)

Table B.2—Altitude correction factors

Altitude (m)	Rating increase required starting from 1000 m (M = 1)	Derating required starting from 1000 m (M = 1)	Rating increase required starting from sea level (M = 1)	Derating required starting from sea level (M = 1)
0			1.000	1.000
500			1.063	0.940
1000	1.000	1.000	1.131	0.885
1500	1.063	0.940	1.202	0.832
2000	1.131	0.885	1.278	0.782
2500	1.202	0.832	1.359	0.736
3000	1.278	0.782	1.445	0.692
3500	1.359	0.736	1.536	0.651
4000	1.445	0.692	1.634	0.612

NOTE—At a 1000 m application altitude, if not already rated for 1000 m, there is a 13.1% increase in withstand requirement or 11.5% decrease in withstand capability from sea level NTP rating.

Copyright © 2003 IEEE. All rights reserved.

Copyright The Institute of Electrical and Electronics Engineers, Inc.
Provided by IHS under license with IEEE
No reproduction or networking permitted without license from IHS
Not for Resale

Annex C

(informative)

Bibliography

[B1] ANSI C37.72-1987, American National Standard for Manually-Operated, Dead-Front Padmounted Switchgear with Load Interrupting Switches and Separable Connectors for Alternating-Current Systems.[12]

[B2] CSA C22.2 No. 31-1989, Switchgear Assemblies; Industrial Products.[13]

[B3] IEEE Std C37.20.1-2002, IEEE Standard for Metal-Enclosed Low-Voltage Power Circuit Breaker Switchgear.[14, 15]

[B4] IEEE Std C37.71™-2001, IEEE Standard for Three-Phase, Manually Operated Subsurface and Vault Load-Interrupting Switches for Alternating Current Systems.

[B5] IEEE Std C37.73™-1998, IEEE Standard Requirements for Pad-Mounted Fused Switchgear.

[B6] IEEE PC37.100.1, Draft Standard Requirements for Power Switchgear.[16]

[12]ANSI publications are available from the Sales Department, American National Standards Institute, 25 West 43rd Street, 4th Floor, New York, NY 10036, USA (http://www.ansi.org/).

[13]CSA publications are available from the Canadian Standards Association (Standards Sales), 178 Rexdale Blvd., Etobicoka, Ontario, Canada M9W 1R3 (http://www.csa.ca/).

[14]The IEEE standards or products referred to in Annex C are trademarks owned by the Institute of Electrical and Electronics Engineers, Incorporated.

[15]IEEE publications are available from the Institute of Electrical and Electronics Engineers, 445 Hoes Lane, P.O. Box 1331, Piscataway, NJ 08855-1331, USA (http://standards.ieee.org/).

[16]This IEEE standards project was not approved by the IEEE-SA Standards Board at the time this publication went to press. For further information about obtaining a draft, contact the IEEE.

--`,,`-`-`,,`,,`,`,,`---

Copyright © 2003 IEEE. All rights reserved.
Copyright The Institute of Electrical and Electronics Engineers, Inc.
Provided by IHS under license with IEEE
No reproduction or networking permitted without license from IHS
Not for Resale