Recognized as an
American National Standard (ANSI)

IEEE Std C37.2-1996(R2001)
(Revision of C37.2-1991)

IEEE Standard Electrical Power System Device Function Numbers and Contact Designations

Sponsor
Substations Committee
of the
IEEE Power Engineering Society

Reaffirmed 2 May 2002
Approved 15 May 1997

American National Standards Institute

Reaffirmed 6 December 2001
Approved 10 December 1996

IEEE Standards Board

Abstract: The definition and application of function numbers for devices used in electrical substations and generating plants and in installations of power utilization and conversion apparatus are covered. The purpose of the numbers is discussed, and 94 numbers are assigned. The use of prefixes and suffixes to provide a more specific definition of the function is considered. Device contact designation is also covered.
Keywords: device functions, device function numbers, function numbers, relay, designations, switchgear

The Institute of Electrical and Electronics Engineers, Inc.

345 East 47th Street, New York, NY 10017-2394, USA

Copyright © 1997 by the Institute of Electrical and Electronics Engineers, Inc.

All rights reserved. Published 1997. Printed in the United States of America.

ISBN 1-55937-879-4

No part of this publication may be reproduced in any form, in an electronic retrieval system or otherwise, without the prior written permission of the publisher.

Copyright The Institute of Electrical and Electronics Engineers, Inc.
Provided by IHS under license with IEEE
No reproduction or networking permitted without license from IHS

Not for Resale

IEEE Standards documents are developed within the IEEE Societies and the Standards Coordinating Committees of the IEEE Standards Board. Members of the committees serve voluntarily and without compensation. They are not necessarily members of the Institute. The standards developed within IEEE represent a consensus of the broad expertise on the subject within the Institute as well as those activities outside of IEEE that have expressed an interest in participating in the development of the standard.

Use of an IEEE Standard is wholly voluntary. The existence of an IEEE Standard does not imply that there are no other ways to produce, test, measure, purchase, market, or provide other goods and services related to the scope of the IEEE Standard. Furthermore, the viewpoint expressed at the time a standard is approved and issued is subject to change brought about through developments in the state of the art and comments received from users of the standard. Every IEEE Standard is subjected to review at least every five years for revision or reaffirmation. When a document is more than five years old and has not been reaffirmed, it is reasonable to conclude that its contents, although still of some value, do not wholly reflect the present state of the art. Users are cautioned to check to determine that they have the latest edition of any IEEE Standard.

Comments for revision of IEEE Standards are welcome from any interested party, regardless of membership affiliation with IEEE. Suggestions for changes in documents should be in the form of a proposed change of text, together with appropriate supporting comments.

Interpretations: Occasionally questions may arise regarding the meaning of portions of standards as they relate to specific applications. When the need for interpretations is brought to the attention of IEEE, the Institute will initiate action to prepare appropriate responses. Since IEEE Standards represent a consensus of all concerned interests, it is important to ensure that any interpretation has also received the concurrence of a balance of interests. For this reason, IEEE and the members of its societies and Standards Coordinating Committees are not able to provide an instant response to interpretation requests except in those cases where the matter has previously received formal consideration.

Comments on standards and requests for interpretations should be addressed to:

Secretary, IEEE Standards Board
445 Hoes Lane
P.O. Box 1331
Piscataway, NJ 08855-1331
USA

NOTE — Attention is called to the possibility that implementation of this standard may require use of subject matter covered by patent rights. By publication of this standard, no position is taken with respect to the existence or validity of any patent rights in connection therewith. The IEEE shall not be responsible for identifying all patents for which a license may be required by an IEEE standard or for conducting inquiries into the legal validity or scope of those patents that are brought to its attention.

Authorization to photocopy portions of any individual standard for internal or personal use is granted by the Institute of Electrical and Electronics Engineers, Inc., provided that the appropriate fee is paid to Copyright Clearance Center. To arrange for payment of licensing fee, please contact Copyright Clearance Center, Customer Service, 222 Rosewood Drive, Danvers, MA 01923 USA; (508) 750-8400. Permission to photocopy portions of any individual standard for educational classroom use can also be obtained through the Copyright Clearance Center.

Copyright The Institute of Electrical and Electronics Engineers, Inc.
Provided by IHS under license with IEEE
No reproduction or networking permitted without license from IHS
Not for Resale

Introduction

(This introduction is not a part of IEEE Std C37.2-1996, IEEE Standard Electrical Power System Device Function Numbers and Contact Designations.)

This standard applies to systems used for the monitoring, protection, switching, and controlling of electric apparatus in unattended and attended substations, generating stations, power utilization and conversion facilities, and equipment designed for automatic protection of power systems.

This standard is a revision of IEEE Std C37.2-1991 . Definitions of some device functions have been improved for present applications, and additional suggested suffix letters have been indicated.

Previous revisions were approved and published as standards dated as 1991, 1987, 1979, 1962, 1956, 1945, and 1937. The original work on this subject was approved in 1928 and published by the American Institute of Electrical Engineers (AIEE) as AIEE No. 26.

Preparation of this standard was done by a working group of the Data Acquisition, Processing, and Control Systems Subcommittee, Substations Committee. Membership of the working group during the preparation of this revision was as follows:

Floyd W. Greenway, *Chair*

W. J. Ackerman	J. W. Evans	J. D. McDonald
J. G. J. Bartok	R. J. Farquharson	J. S. Oswald
W. R. Block	D. C. Gregory	R. R. Schoetker
D. L. Carr	J. E. Holladay	S. C. Sciacca
D. M. Clark	A. P. Johnson	J. Singletary, Jr.
K. L. Cooley	D. L. Johnson	A. R. Skopp
R. W. Corlew	R. L. Kreger	H. L. Smith
G. J. Crask	T. L. Krummrey	R. C. Sodergren
J. G. Cupp	L. W. Kurtz, Jr.	S. R. Sykes
M. J. Dood	C. L. Luri	J. T. Tengdin
R. G. Ehler		T. Watson

This standard was reviewed and checked by the Data Acquisition, Processing, and Control Systems Subcommittee, Substations Committee. Membership of this subcommittee at the time this standard was submitted for approval was as follows:

John D. McDonald, *Chair*

W. J. Ackerman	J. W. Evans	W. B. Prystajecky
A. P. Apostolov	R. J. Farquharson	G. Robinson
L. A. Barto	F. W. Greenway	S. C. Sciacca
G. J. Bartok	D. C. Gregory	J. Singletary, Jr.
W. R. Block	K. K. Jackson	A. R. Skopp
D. L. Carr	D. L. Johnson	H. L. Smith
D. M. Clark	R. L. Kreger	R. C. Sodergren
K. L. Cooley	T. L. Krummrey	C. Stoll
R. W. Corlew	L. W. Kurtz, Jr.	S. R. Sykes
J. G. Cupp	C. LaPlace	J. T. Tengdin
J. W. Dean	J. S. Oswald	T. Watson
M. J. Dood		P. Wong

Copyright The Institute of Electrical and Electronics Engineers, Inc.
Provided by IHS under license with IEEE
No reproduction or networking permitted without license from IHS
Not for Resale

A special thanks is extended to the following members of Working Group G-8 of the Power System Relaying Committee, who provided input, review, and comments on all drafts of this document:

R. Angle
M. Bajpai
W. A. Elmore
C. A. Jacobson
P. A. Kotos
W. G. Lowe
W. J. Marsh
M. J. McDonald
F. P. Plumptre
J. T. Tengdin

The following persons were on the balloting committee:

William J. Ackerman
S. J. Arnot
A. C. Baker
Michael H. Baker
Nelson Barbeito
George J. Bartok
Burhan Becer
Michael J. Bio
Kenneth L. Black
Charles Blattner
Wayne R. Block
Philip C. Bolin
Steven D. Brown
James C. Burke
Dennis L. Carr
Daniel Charbonnet
Frank Y. Chu
D. Mason Clark
J. R. Clayton
Robert Corlew
Richard Cottrell
Eugene F. Counsel
William Daily
John W. Dean
Frank A. Denbrock
W. Bruce Dietzman
Terry Doern
Michael Dood
Gary R. Engmann
James W. Evans
Ron J. Farquharson
Lenard N. Ferguson
David Lane Garrett
Floyd W. Greenway
Daniel C. Gregory
David L. Harris
R. J. Hellweg
Mike L. Holm
Kenneth Jackson
Gerhard W. Juette
Zlatko Kapelina
Richard P. Keil
D. F. Koenig
Alan E. Kollar
Terry L. Krummrey
Donald N. Laird
Lawrence M. Laskowski
Alfred A. Leibold
C. T. Lindeberg
H. Peter Lips
Rusko Matulic
John D. McDonald
A. P. Sakis Meliopoulos
Abdul M. Mousa
Philip R. Nannery
R. S. Nowell
Edward V. Olavarria
J. Ted Orrell
James S. Oswald
Shashi G. Patel
Raymond J. Perina
Kjell Pettersson
Walter Prystajecky
J. F. Quinata
Jakob Sabath
Samuel C. Sciacca
Frank C. Shainauskas
Lee H. Smith
Robert C. Sodergren
Bodo Sojka
Robert P. Stewart
W. Keith Switzer
Stanley R. Sykes
John T. Tengdin
Hemchand Thakar
Duane R. Torgerson
Mark Vainberg
L. F. Volf
Tony Watson
R. J. Wehling

Copyright The Institute of Electrical and Electronics Engineers, Inc.
Provided by IHS under license with IEEE
No reproduction or networking permitted without license from IHS
Not for Resale

When the IEEE Standards Board approved this standard on 10 December 1996, it had the following membership:

Donald C. Loughry, *Chair*
Richard J. Holleman, *Vice Chair*
Andrew G. Salem, *Secretary*

Gilles A. Baril	E. G. “Al” Kiener	Jose R. Ramos
Clyde R. Camp	Joseph L. Koepfinger*	Arthur K. Reilly
Joseph A. Cannatelli	Stephen R. Lambert	Ronald H. Reimer
Stephen L. Diamond	Lawrence V. McCall	Gary S. Robinson
Harold E. Epstein	L. Bruce McClung	Ingo Rüsch
Donald C. Fleckenstein	Marco W. Migliaro	John S. Ryan
Jay Forster*	Mary Lou Padgett	Chee Kiow Tan
Donald N. Heirman	John W. Pope	Leonard L. Tripp
Ben C. Johnson		Howard L. Wolfman

*Member Emeritus

Also included are the following nonvoting IEEE Standards Board liaisons:

Satish K. Aggarwal	Alan H. Cookson	Chester C. Taylor

Rochelle L. Stern, *IEEE Standards Project Editor*

Copyright The Institute of Electrical and Electronics Engineers, Inc.
Provided by IHS under license with IEEE
No reproduction or networking permitted without license from IHS
Not for Resale

CLAUSE PAGE

1. Overview 1

1.1 Scope 1
1.2 Purpose 1

2. References 2

3. Standard device function number descriptions 2

3.1 Standard device function numbers 2
3.2 Addition of prefixes and suffixes 12
3.3 Suggested prefixes 12
3.4 Suggested suffix letters 12
3.5 Suffix numbers 15
3.6 Devices performing more than one function 15

4. Device contacts 15

4.1 Auxiliary, position, and limit switch contacts 15
4.2 Limit switches 19
4.3 Torque limit switches 20
4.4 Other switches 20
4.5 Representation of device contacts on electrical diagrams 20

Annex A (informative) Samples of device function numbers 24

Annex B (informative) Bibliography 28

Copyright The Institute of Electrical and Electronics Engineers, Inc.
Provided by IHS under license with IEEE
No reproduction or networking permitted without license from IHS
Not for Resale

IEEE Standard Electrical Power System Device Function Numbers and Contact Designations

1. Overview

1.1 Scope

This standard applies to the definition and application of function numbers for devices used in electrical substations and generating plants and in installations of power utilization and conversion apparatus.

NOTE — In the past, device function numbers have typically represented individual or component devices. These numbers may also be used to represent functions in microprocessor-based devices or software programs.

1.2 Purpose

A device function number, with an appropriate prefix and appended suffix is used to identify the function(s) of each device installed in electrical equipment. This includes manual, partial-automatic, and automatic switchgear. These numbers are to be used in drawings, elementary and connection diagrams, instruction books, publications, and specifications. In addition, for automatic switchgear, the device number may be physically placed on, or adjacent to, each device on the assembled equipment. This will enable a device to be readily identified.

NOTE — These device function designations have been developed as a result of usage over many years. They may define the actual function the device performs in equipment or they may refer to the electrical or other quantity to which the device is responsive. Hence, in some instances, there may be a choice of the function number to be used for a given device. The preferable choice to be made should be the function number that is recognized to have the narrowest interpretation in all cases. The choice should specifically identify a device in the minds of all individuals concerned with the design and operation of the equipment.

Copyright © 1997 IEEE All Rights Reserved

--`,,`,,`-`-`,,`,,`,`,,`---

Copyright The Institute of Electrical and Electronics Engineers, Inc.
Provided by IHS under license with IEEE
No reproduction or networking permitted without license from IHS
Not for Resale

2. References

This standard shall be used in conjunction with the following publications. When the following standards are superseded by an approved revision, the revision shall apply.

ASME Y1.1-1989, Abbreviations for Use on Drawings and in Text.[1]

IEEE Std 315-1975, (Reaff 1993) IEEE Standard Graphic Symbols for Electrical and Electronics Diagrams (ANSI).[2]

IEEE Std C37.20.1-1993, IEEE Standard for Metal-Enclosed Low-Voltage Power Circuit Breaker Switchgear (ANSI).

IEEE Std C37.20.2-1993, IEEE Standard for Metal-Clad and Station-Type Cubicle Switchgear (ANSI).

3. Standard device function number descriptions

3.1 Standard device function numbers

Each number, with its corresponding function name and a general description of the function, is listed below. An index of device function names consisting of the corresponding device numbers and page numbers is provided on page 33.

NOTE — When alternate names and descriptions are included under the function, only the name and description that applies to each specific case should be used. In general, only one name for each device, such as relay, contactor, circuit breaker, switch, or monitor, is included in each function designation. However, when the function is not inherently restricted to any specific type of device, and where the type of device itself is thus merely incidental, any one of the above listed alternative names, as applicable, may be substituted. For example, if for device function 6 a contactor is used for the purpose in place of a circuit breaker, the function name should be specified as “starting contactor.”

For every application of device function numbers, the originator should provide a brief definition for all device function numbers used in that application, including all combinations of prefixes, function numbers, and suffixes. Typical definitions are illustrated in Figures 3 and 4. These definitions should be included in the drawing where the device function number is used, or in a separate drawing or list to which the other drawings refer. All instruction books and other documents shall also include the device function number definitions.

Numbers from 95 through 99 should be assigned only for those functions in specific cases where none of the assigned standard device function numbers are applicable. Numbers that are “reserved for future application” should not be used.

3.1.1 Device number 1—master element

A device, such as a control switch, etc., that serves, either directly or through such permissive devices as protective and time-delay relays, to place equipment in or out of operation.

NOTE — This number is normally used for a hand-operated device, although it may also be used for an electrical or mechanical device for which no other function number is suitable.

[1]ASME publications are available from the American Society of Mechanical Engineers, 22 Law Drive, Fairfield, NJ, 07007, USA.
[2]IEEE publications are available from the Institute of Electrical and Electronics Engineers, Service Center, 445 Hoes Lane, P.O. Box 1331, Piscataway, NJ 08855-1331, USA.

 Copyright © 1997 IEEE All Rights Reserved

Copyright The Institute of Electrical and Electronics Engineers, Inc.
Provided by IHS under license with IEEE
No reproduction or networking permitted without license from IHS Not for Resale

3.1.2 Device number 2—time-delay starting or closing relay

A device that functions to give a desired amount of time delay before or after any point of operation in a switching sequence or protective relay system, except as specifically provided by device functions 48, 62, 79, and 82.

3.1.3 Device number 3—checking or interlocking relay

A device that operates in response to the position of one or more other devices or predetermined conditions in a piece of equipment or circuit, to allow an operating sequence to proceed, or to stop, or to provide a check of the position of these devices or conditions for any purpose.

3.1.4 Device number 4—master contactor

A device, generally controlled by device function l or the equivalent and the required permissive and protective devices, that serves to make and break the necessary control circuits to place equipment into operation under the desired conditions and to take it out of operation under abnormal conditions.

3.1.5 Device number 5—stopping device

A control device used primarily to shut down equipment and hold it out of operation. (This device may be manually or electrically actuated, but it excludes the function of electrical lockout [see device function 86] on abnormal conditions.)

3.1.6 Device number 6—starting circuit breaker

A device whose principal function is to connect a machine to its source of starting voltage.

3.1.7 Device number 7—rate-of-change relay

A device that operates when the rate-of-change of the measured quantity exceeds a threshold value, except as defined by device 63 (see 3.1.63).

3.1.8 Device number 8—control power disconnecting device

A device, such as a knife switch, circuit breaker, or pull-out fuse block, used for the purpose of connecting and disconnecting the source of control power to and from the control bus or equipment.

NOTE — Control power is considered to include auxiliary power that supplies such apparatus as small motors and heaters.

3.1.9 Device number 9—reversing device

A device that is used for the purpose of reversing a machine field or for performing any other reversing function.

3.1.10 Device number 10—unit sequence switch

A device that is used to change the sequence in which units may be placed in and out of service in multiple-unit equipment.

3.1.11 Device number 11—multifunction device

A device that performs three or more comparatively important functions that could only be designated by combining several device function numbers. All of the functions performed by device 11 shall be defined in the drawing legend, device function definition list or relay setting record. See Annex B for further discussion and examples.

Copyright © 1997 IEEE All Rights Reserved

--`,,`,,`-`-`,,`,,`,`,,`---

Copyright The Institute of Electrical and Electronics Engineers, Inc.
Provided by IHS under license with IEEE
No reproduction or networking permitted without license from IHS Not for Resale

NOTE — If only two relatively important functions are performed by the device, it is preferred that both function numbers be used, as described in 3.6.

3.1.12 Device number 12—overspeed device

A device, usually direct connected, that operates on machine overspeed.

3.1.13 Device number 13—synchronous-speed device

A device such as a centrifugal-speed switch, a slip-frequency relay, a voltage relay, an undercurrent relay, or any other type of device that operates at approximately the synchronous speed of a machine.

3.1.14 Device number 14—underspeed device

A device that functions when the speed of a machine falls below a predetermined value.

3.1.15 Device number 15—speed or frequency matching device

A device that functions to match and hold the speed or frequency of a machine or a system equal to, or approximately equal to, that of another machine, source, or system.

3.1.16 Device number 16—not used

Reserved for future application.

3.1.17 Device number 17—shunting or discharge switch

A device that serves to open or close a shunting circuit around any piece of apparatus (except a resistor), such as a machine field, a machine armature, a capacitor, or a reactor.

NOTE — This excludes devices that perform such shunting operations as may be necessary in the process of starting a machine by devices 6 or 42 (or their equivalent) and also excludes device function 73 that serves for the switching of resistors.

3.1.18 Device number 18—accelerating or decelerating device

A device that is used to close or cause the closing of circuits that are used to increase or decrease the speed of a machine.

3.1.19 Device number 19—starting-to-running transition contactor

A device that operates to initiate or cause the automatic transfer of a machine from the starting to the running power connection.

3.1.20 Device number 20—electrically operated valve

An electrically operated, controlled, or monitored device used in a fluid, air, gas, or vacuum line.

NOTE — The function of the valve may be more completely indicated by the use of suffixes as discussed in 3.2.

3.1.21 Device number 21—distance relay

A device that functions when the circuit admittance, impedance, or reactance increases or decreases beyond a predetermined value.

Copyright © 1997 IEEE All Rights Reserved

Copyright The Institute of Electrical and Electronics Engineers, Inc.
Provided by IHS under license with IEEE
No reproduction or networking permitted without license from IHS Not for Resale

3.1.22 Device number 22—equalizer circuit breaker

A device that serves to control or make and break the equalizer or the current-balancing connections for a machine field, or for regulating equipment, in a multiple-unit installation.

3.1.23 Device number 23—temperature control device

A device that functions to control the temperature of a machine or other apparatus, or of any medium, when its temperature falls below or rises above a predetermined value.

NOTE — An example is a thermostat that switches on a space heater in a switchgear assembly when the temperature falls to a desired value. This should be distinguished from a device that is used to provide automatic temperature regulation between close limits and would be designated as device function 90T.

3.1.24 Device number 24—volts per hertz relay

A device that operates when the ratio of voltage to frequency is above a preset value or is below a different preset value. The relay may have any combination of instantaneous or time delayed characteristics.

3.1.25 Device number 25—synchronizing or synchronism-check relay

A synchronizing device produces an output that causes closure at zero-phase angle difference between two circuits. It may or may not include voltage and speed control. A synchronism-check relay permits the paralleling of two circuits that are within prescribed limits of voltage magnitude, phase angle, and frequency.

3.1.26 Device number 26—apparatus thermal device

A device that functions when the temperature of the protected apparatus (other than the load-carrying windings of machines and transformers as covered by device function number 49) or of a liquid or other medium exceeds a predetermined value; or when the temperature of the protected apparatus or of any medium decreases below a predetermined value.

3.1.27 Device number 27—undervoltage relay

A device that operates when its input voltage is less than a predetermined value.

3.1.28 Device number 28—flame detector

A device that monitors the presence of the pilot or main flame in such apparatus as a gas turbine or a steam boiler.

3.1.29 Device number 29—isolating contactor or switch

A device that is used expressly for disconnecting one circuit from another for the purposes of emergency operation, maintenance, or test.

3.1.30 Device number 30—annunciator relay

A nonautomatically reset device that gives a number of separate visual indications upon the functioning of protective devices and that may also be arranged to perform a lockout function.

3.1.31 Device number 31—separate excitation device

A device that connects a circuit, such as the shunt field of a synchronous converter, to a source of separate excitation during the starting sequence.

Copyright © 1997 IEEE All Rights Reserved

Copyright The Institute of Electrical and Electronics Engineers, Inc.
Provided by IHS under license with IEEE
No reproduction or networking permitted without license from IHS Not for Resale

3.1.32 Device number 32—directional power relay

A device that operates on a predetermined value of power flow in a given direction such as reverse power flow resulting from the motoring of a generator upon loss of its prime mover.

3.1.33 Device number 33—position switch

A device that makes or breaks contact when the main device or piece of apparatus that has no device function number reaches a given position.

3.1.34 Device number 34—master sequence device

A device such as a motor-operated multi-contact switch, or the equivalent, or a programmable device, that establishes or determines the operating sequence of the major devices in equipment during starting and stopping or during sequential switching operations.

3.1.35 Device number 35—brush-operating or slip-ring short-circuiting device

A device for raising, lowering, or shifting the brushes of a machine; short-circuiting its slip rings; or engaging or disengaging the contacts of a mechanical rectifier.

3.1.36 Device number 36—polarity or polarizing voltage device

A device that operates, or permits the operation of, another device on a predetermined polarity only or that verifies the presence of a polarizing voltage in equipment.

3.1.37 Device number 37—undercurrent or underpower relay

A device that functions when the current or power flow decreases below a predetermined value.

3.1.38 Device number 38—bearing protective device

A device that functions on excessive bearing temperature or on other abnormal mechanical conditions associated with the bearing, such as undue wear, which may eventually result in excessive bearing temperature or failure.

3.1.39 Device number 39—mechanical condition monitor

A device that functions upon the occurrence of an abnormal mechanical condition (except that associated with bearings as covered under device function 38), such as excessive vibration, eccentricity, expansion, shock, tilting, or seal failure.

3.1.40 Device number 40—field relay

A device that functions on a given or abnormally high or low value or failure of machine field current, or on an excessive value of the reactive component of armature current in an ac machine indicating abnormally high or low field excitation.

3.1.41 Device number 41—field circuit breaker

A device that functions to apply or remove the field excitation of a machine.

 Copyright © 1997 IEEE All Rights Reserved

Copyright The Institute of Electrical and Electronics Engineers, Inc.
Provided by IHS under license with IEEE
No reproduction or networking permitted without license from IHS Not for Resale

3.1.42 Device number 42—running circuit breaker

A device whose function is to connect a machine to its source of running or operating voltage. This function may also be used for a device, such as a contactor, that is used in series with a circuit breaker or other fault-protecting means, primarily for frequent opening and closing of the circuit.

3.1.43 Device number 43—manual transfer or selector device

A manually operated device that transfers control or potential circuits in order to modify the plan of operation of the associated equipment or of some of the associated devices.

3.1.44 Device number 44—unit sequence starting relay

A device that functions to start the next available unit in multiple-unit equipment upon the failure or non-availability of the normally preceding unit.

3.1.45 Device number 45—atmospheric condition monitor

A device that functions upon the occurrence of an abnormal atmospheric condition, such as damaging fumes, explosive mixtures, smoke, or fire.

3.1.46 Device number 46—reverse-phase or phase-balance current relay

A device in a polyphase circuit that operates when the polyphase currents are of reverse-phase sequence or when the polyphase currents are unbalanced or when the negative phase-sequence current exceeds a preset value.

3.1.47 Device number 47—phase-sequence or phase-balance voltage relay

A device in a polyphase circuit that functions upon a predetermined value of polyphase voltage in the desired phase sequence, when the polyphase voltages are unbalanced, or when the negative phase-sequence voltage exceeds a preset value.

3.1.48 Device number 48—incomplete sequence relay

A device that generally returns the equipment to the normal or off position and locks it out if the normal starting, operating, or stopping sequence is not properly completed within a predetermined time.

3.1.49 Device number 49—machine or transformer thermal relay

A device that functions when the temperature of a machine armature winding or other load-carrying winding or element of a machine or power transformer exceeds a predetermined value.

3.1.50 Device number 50—instantaneous overcurrent relay

A device that operates with no intentional time delay when the current exceeds a preset value.

3.1.51 Device number 51—ac time overcurrent relay

A device that functions when the ac input current exceeds a predetermined value, and in which the input current and operating time are inversely related through a substantial portion of the performance range.

Copyright © 1997 IEEE All Rights Reserved

Copyright The Institute of Electrical and Electronics Engineers, Inc.
Provided by IHS under license with IEEE
No reproduction or networking permitted without license from IHS Not for Resale

3.1.52 Device number 52—ac circuit breaker

A device that is used to close and interrupt an ac power circuit under normal conditions or to interrupt this circuit under fault or emergency conditions.

3.1.53 Device number 53—exciter or dc generator relay

A device that forces the dc machine field excitation to build up during starting or that functions when the machine voltage has built up to a given value.

3.1.54 Device number 54—turning gear engaging device

A device either electrically operated, controlled, or monitored that functions to cause the turning gear to engage (or disengage) the machine shaft.

3.1.55 Device number 55—power factor relay

A device that operates when the power factor in an ac circuit rises above or falls below a predetermined value.

3.1.56 Device number 56—field application relay

A device that automatically controls the application of the field excitation to an ac motor at some predetermined point in the slip cycle.

3.1.57 Device number 57—short-circuiting or grounding device

A device that functions to short-circuit or ground a circuit in response to automatic or manual means.

3.1.58 Device number 58—rectification failure relay

A device that functions if a power rectifier fails to conduct or block properly.

3.1.59 Device number 59—overvoltage relay

A device that operates when its input voltage exceeds a predetermined value.

3.1.60 Device number 60—voltage or current balance relay

A device that operates on a given difference in voltage, or current input or output, of two circuits.

3.1.61 Device number 61—density switch or sensor

A device that operates at a given density value or at a given rate of change of density.

3.1.62 Device number 62—time-delay stopping or opening relay

A device that imposes a time delay in conjunction with the device that initiates the shutdown, stopping, or opening operation in an automatic sequence or protective relay system.

3.1.63 Device number 63—pressure switch

A device that operates at a given pressure value or at a given rate of change of pressure.

Copyright © 1997 IEEE All Rights Reserved

Copyright The Institute of Electrical and Electronics Engineers, Inc.
Provided by IHS under license with IEEE
No reproduction or networking permitted without license from IHS
Not for Resale

3.1.64 Device number 64—ground detector relay

A device that operates upon failure of machine or other apparatus insulation to ground.

NOTE — This function is not applied to a device connected in the secondary circuit of current transformers in a normally grounded power system where other overcurrent device numbers with the suffix G or N should be used; for example, 51N for an ac time overcurrent relay connected in the secondary neutral of the current transformers.

3.1.65 Device number 65—governor

A device consisting of an assembly of fluid, electrical, or mechanical control equipment used for regulating the flow of water, steam, or other media to the prime mover for such purposes as starting, holding speed or load, or stopping.

3.1.66 Device number 66—notching or jogging device

A device that functions to allow only a specified number of operations of a given device or piece of equipment, or a specified number of successive operations within a given time of each other. It is also a device that functions to energize a circuit periodically or for fractions of specified time intervals, or that is used to permit intermittent acceleration or jogging of a machine at low speeds for mechanical positioning.

3.1.67 Device number 67—ac directional overcurrent relay

A device that functions at a desired value of ac overcurrent flowing in a predetermined direction.

3.1.68 Device number 68—blocking or “out-of-step” relay

A device that initiates a pilot signal for blocking of tripping on external faults in a transmission line or in other apparatus under predetermined conditions, or cooperates with other devices to block tripping or reclosing on an out-of-step condition or on power swings.

3.1.69 Device number 69—permissive control device

A device with two-positions that in one position permits the closing of a circuit breaker, or the placing of a piece of equipment into operation, and in the other position, prevents the circuit breaker or the equipment from being operated.

3.1.70 Device number 70—rheostat

A device used to vary the resistance in an electric circuit when the device is electrically operated or has other electrical accessories, such as auxiliary, position, or limit switches.

3.1.71 Device number 71—level switch

A device that operates at a given level value, or on a given rate of change of level.

3.1.72 Device number 72—dc circuit breaker

A device that is used to close and interrupt a dc power circuit under normal conditions or to interrupt this circuit under fault or emergency conditions.

3.1.73 Device number 73—load-resistor contactor

A device that is used to shunt or insert a step of load limiting, shifting, or indicating resistance in a power circuit; to switch a space heater in circuit; or to switch a light or regenerative load resistor of a power rectifier or other machine in and out of circuit.

Copyright © 1997 IEEE All Rights Reserved

Copyright The Institute of Electrical and Electronics Engineers, Inc.
Provided by IHS under license with IEEE
No reproduction or networking permitted without license from IHS Not for Resale

3.1.74 Device number 74—alarm relay

A device other than an annunciator, as covered under device function 30, that is used to operate, or that operates in connection with, a visual or audible alarm.

3.1.75 Device number 75—position changing mechanism

A device that is used for moving a main device from one position to another in equipment; for example, shifting a removable circuit breaker unit to and from the connected, disconnected, and test positions.

3.1.76 Device number 76—dc overcurrent relay

A device that functions when the current in a dc circuit exceeds a given value.

3.1.77 Device number 77—telemetering device

A transmitting device used to generate and transmit to a remote location an electrical signal representing a measured quantity; or a receiver used to receive the electrical signal from a remote transmitter and convert the signal to represent the original measured quantity.

3.1.78 Device number 78—phase-angle measuring relay

A device that functions at a predetermined phase angle between two voltages, between two currents, or between voltage and current.

3.1.79 Device number 79—reclosing relay

A device that controls the automatic reclosing and locking out of an ac circuit interrupter.

3.1.80 Device number 80—flow switch

A device that operates at a given flow value, or at a given rate of change of flow.

3.1.81 Device number 81—frequency relay

A device that responds to the frequency of an electrical quantity, operating when the frequency or rate of change of frequency exceeds or is less than a predetermined value.

3.1.82 Device number 82—dc load-measuring reclosing relay

A device that controls the automatic closing and reclosing of a dc circuit interrupter, generally in response to load circuit conditions.

3.1.83 Device number 83—automatic selective control or transfer relay

A device that operates to select automatically between certain sources or conditions in equipment or that performs a transfer operation automatically.

3.1.84 Device number 84—operating mechanism

A device consisting of the complete electrical mechanism or servomechanism, including the operating motor, solenoids, position switches, etc., for a tap changer, induction regulator, or any similar piece of apparatus that otherwise has no device function number.

Copyright © 1997 IEEE All Rights Reserved

Copyright The Institute of Electrical and Electronics Engineers, Inc.
Provided by IHS under license with IEEE
No reproduction or networking permitted without license from IHS Not for Resale

3.1.85 Device number 85—carrier or pilot-wire relay

A device that is operated or restrained by a signal transmitted or received via any communications media used for relaying.

3.1.86 Device number 86—lockout relay

A device that trips and maintains the associated equipment or devices inoperative until it is reset by an operator, either locally or remotely.

3.1.87 Device number 87—differential protective relay

A device that operates on a percentage, phase angle, or other quantitative difference of two or more currents or other electrical quantities.

3.1.88 Device number 88—auxiliary motor or motor generator

A device used for operating auxiliary equipment, such as pumps, blowers, exciters, rotating magnetic amplifiers, etc.

3.1.89 Device number 89—line switch

A device used as a disconnecting, load-interrupter, or isolating switch in an ac or dc power circuit. (This device function number is normally not necessary unless the switch is electrically operated or has electrical accessories, such as an auxiliary switch, a magnetic lock, etc.)

3.1.90 Device number 90—regulating device

A device that functions to regulate a quantity or quantities, such as voltage, current, power, speed, frequency, temperature, and load, at a certain value or between certain (generally close) limits for machines, tie lines, or other apparatus.

3.1.91 Device number 91—voltage directional relay

A device that operates when the voltage across an open circuit breaker or contactor exceeds a given value in a given direction.

3.1.92 Device number 92—voltage and power directional relay

A device that permits or causes the connection of two circuits when the voltage difference between them exceeds a given value in a predetermined direction and causes these two circuits to be disconnected from each other when the power flowing between them exceeds a given value in the opposite direction.

3.1.93 Device number 93—field-changing contactor

A device that functions to increase or decrease, in one step, the value of field excitation on a machine.

3.1.94 Device number 94—tripping or trip-free relay

A device that functions to trip a circuit breaker, contactor, or equipment; to permit immediate tripping by other devices; or to prevent immediate reclosing of a circuit interrupter if it should open automatically, even though its closing circuit is maintained closed.

3.1.95 Device numbers 95–99—used only for specific applications

These device numbers are used in individual specific installations if none of the functions assigned to the numbers from 1 through 94 are suitable.

Copyright © 1997 IEEE All Rights Reserved

Copyright The Institute of Electrical and Electronics Engineers, Inc.
Provided by IHS under license with IEEE
No reproduction or networking permitted without license from IHS Not for Resale

3.2 Addition of prefixes and suffixes

Letters and numbers may be used as prefixes or suffixes to device function numbers to provide a more specific definition of the function, as discussed below. They permit a manifold multiplication of available function designations for the large number and variety of devices used in the many types of equipment covered by this standard. They may also serve to denote individual or specific parts or auxiliary contacts of these devices or certain distinguishing features, characteristics, or conditions that describe the use of the device or its contacts in the equipment.

Prefixes and suffixes should, however, be used only when they accomplish a useful purpose. For example, when all of the devices in a piece of equipment are associated with only one kind of apparatus, such as a feeder, motor, or generator, it is common practice, in order to retain maximum simplicity in device function identification, not to add the respective suffix letters F, M, or G to any of the device function numbers.

In order to prevent any possible conflict or confusion, each letter suffix should preferably have only one meaning in individual pieces of equipment. To accomplish this, short, distinctive abbreviations, such as those contained in ASME Y1.1-1989, or any appropriate combination of letters may also be used as letter suffixes where necessary. However, each suffix should not consist of more than three (and preferably not more than two) letters, in order to keep the complete function designation as short and simple as possible. The meaning of each suffix should be designated on the drawings or in the publications with which they are used, similar to TC-trip coil, V-voltage, X-auxiliary relay.

In cases where the same suffix (consisting of one letter or a combination of letters) has different meanings in the same equipment depending upon the device function number with which it is used, then the complete device function number with its suffix letter or letters and its corresponding function definition should be listed in the legend in each case, i.e., 63V-vacuum relay, 70R-raising relay for device 70, 90V-voltage regulator.

3.3 Suggested prefixes

A similar series of numbers, prefixed by the letters RE (for *remote*) may be used for the interposing relays performing functions that are controlled directly from the supervisory system. Typical examples of such functions are RE1, RE5, and RE94.

In multiple-unit installations, it may be desirable to use a prefix number to distinguish between device functions associated with individual units. For example, in pipeline pump stations, the numbers 1–99 are applied to device functions that are associated with the overall station operation. A similar series of numbers, starting with 101 instead of 1, are used for those device functions that are associated with unit 1; a similar series starting with 201 for device functions that are associated with unit 2; and so on, for each unit in these installations.

3.4 Suggested suffix letters

Subclauses 3.4.1 through 3.4.6 describe letters that are commonly used and are recommended for use when required and as appropriate.

3.4.1 Auxiliary devices

These letters denote separate auxiliary devices, such as the following:

C	Closing relay/contactor
CL	Auxiliary relay, closed (energized when main device is in closed position)
CS	Control switch
D	“Down” position switch relay
L	Lowering relay
O	Opening relay/contactor

 Copyright © 1997 IEEE All Rights Reserved

Copyright The Institute of Electrical and Electronics Engineers, Inc.
Provided by IHS under license with IEEE
No reproduction or networking permitted without license from IHS Not for Resale

OP	Auxiliary relay, open (energized when main device is in open position)
PB	Push button
R	Raising relay
U	“UP” position switch relay
X	Auxiliary relay
Y	Auxiliary relay
Z	Auxiliary relay

NOTE — In the control of a circuit breaker with a so-called X-Y relay control scheme, the X relay is the device whose main contacts are used to energize the closing coil or the device that in some other manner, such as by the release of stored energy, causes the breaker to close. The contacts of the Y relay provide the antipump feature of the circuit breaker.

3.4.2 Actuating quantities

These letters indicate the condition or electrical quantity to which the device responds, or the medium in which it is located, such as the following:

A	Air/amperes/alternating
C	Current
D	Direct/discharge
E	Electrolyte
F	Frequency/flow/fault
GP	Gas pressure
H	Explosive/harmonics
I0	Zero sequence current
I-, I2	Negative sequence current
I+, I1	Positive sequence current
J	Differential
L	Level/liquid
P	Power/pressure
PF	Power factor
Q	Oil
S	Speed/suction/smoke
T	Temperature
V	Voltage/volts/vacuum
VAR	Reactive power
VB	Vibration
W	Water/watts

3.4.3 Main device

The following letters denote the main device to which the numbered device is applied or is related:

A	Alarm/auxiliary power
AC	Alternating current
AN	Anode
B	Battery/blower/bus
BK	Brake
BL	Block (valve)
BP	Bypass
BT	Bus tie
C	Capacitor/condenser/compensator/carrier current/case/compressor
CA	Cathode
CH	Check (valve)
D	Discharge (valve)
DC	Direct current
E	Exciter
F	Feeder/field/filament/filter/fan

Copyright © 1997 IEEE All Rights Reserved

Copyright The Institute of Electrical and Electronics Engineers, Inc.
Provided by IHS under license with IEEE
No reproduction or networking permitted without license from IHS Not for Resale

G	Generator/ground[3]
H	Heater/housing
L	Line/logic
M	Motor/metering
MOC	Mechanism operated contact[4]
N	Network/neutral[5]
P	Pump/phase comparison
R	Reactor/rectifier/room
S	Synchronizing/secondary/strainer/sump/suction (valve)
T	Transformer/thyratron
TH	Transformer (high-voltage side)
TL	Transformer (low-voltage side)
TM	Telemeter
TOC	Truck-operated contacts[6]
TT	Transformer (tertiary-voltage side)
U	Unit

3.4.4 Main device parts

These letters denote parts of the main device, except auxiliary contacts, position switches, limit switches, and torque limit switches, which are covered in Clause 4.

BK	Brake
C	Coil/condenser/capacitor
CC	Closing coil/closing contactor
HC	Holding coil
M	Operating motor
MF	Fly-ball motor
ML	Load-limit motor
MS	Speed adjusting or synchronizing motor
OC	Opening contactor
S	Solenoid
SI	Seal-in
T	Target
TC	Trip coil
V	Valve

3.4.5 Other suffix letters

The following letters cover all other distinguishing features, characteristics, or conditions not specifically described in 3.4.1 through 3.4.4, which serve to describe the use of the device in the equipment, such as

A	Accelerating/automatic
B	Blocking/backup
BF	Breaker failure
C	Close/cold
D	Decelerating/detonate/down/disengaged
E	Emergency/engaged
F	Failure/forward
GP	General purpose
H	Hot/high

[3]Suffix N is preferred when the device is connected in the residual of a polyphase circuit, is connected across a broken delta, or is internally derived from the polyphase current or voltage quantities. The suffix G is preferred where the measured quantity is in the path to ground or, in the case of ground fault detectors, is the current flowing to ground. See A.2 in Annex A for examples.
[4]MOC denotes a circuit breaker mechanism-operated auxiliary switch that is mounted on the stationary housing of a removable circuit breaker.
[5]See Footnote 3.
[6]TOC denotes a circuit breaker truck-operated auxiliary switch that is mounted on the stationary housing of a removable circuit breaker.

 Copyright © 1997 IEEE All Rights Reserved

Copyright The Institute of Electrical and Electronics Engineers, Inc.
Provided by IHS under license with IEEE
No reproduction or networking permitted without license from IHS Not for Resale

HIZ	High impedance fault
HR	Hand reset
HS	High speed
L	Left/local/low/lower/leading
M	Manual
O	Open/over
OFF	Off
ON	On
P	Polarizing
R	Right/raise/reclosing/receiving/remote/reverse
S	Sending/swing
SHS	Semi-high speed
T	Test/trip/trailing
TDC	Time-delay closing contact
TDDO	Time delayed relay coil drop-out
TDO	Time-delay opening contact
TDPU	Time delayed relay coil pickup
THD	Total harmonic distortion
U	Up/under

3.4.6 Use of suffix letters

Lowercase (small) letters are used in practically all instances on electrical diagrams for the auxiliary, position, and limit switches, as shown in 4.1. Uppercase (capital) letters are generally used for all suffix letters in 3.4.

The letters in 3.4.1 through 3.4.3, since they should generally form part of the device function designation, are usually written directly after the device function number, for example, 52CS, 71W, or 49D. When it is necessary to use two types of suffix letters in connection with one function number, it is often desirable for clarity to separate them by a slanted line or dash, as, for example, 20D/CS or 20D-CS.

The suffix letters in 3.4.4, which denote parts of the main device, and those in 3.4.5, which cannot or need not form part of the device function designation, are generally written directly below the device function number on the drawings, for example

52/CC or 43/A (see Figure 4)

3.5 Suffix numbers

If two or more devices with the same function number and suffix letter (if used) are present in the same piece of equipment, they may be distinguished by numbered suffixes, as, for example, 4X-1, 4X-2, and 4X-3, when necessary.

3.6 Devices performing more than one function

If one device performs two important functions in a piece of equipment so that it is desirable to identify both of these functions, a double function number and name, such as 50/51 instantaneous and time overcurrent relay may be used.

4. Device contacts

4.1 Auxiliary, position, and limit switch contacts

The letters *a* and *b* shall be used for all auxiliary, position, and limit switch contacts for such devices and equipment as circuit breakers, contactors, valves and rheostats, and contacts of relays as follows:

a Contact that is open when the main device is in the standard reference position, commonly referred to as the nonoperated or de-energized position, and that closes when the device assumes the opposite position

Copyright © 1997 IEEE All Rights Reserved

Copyright The Institute of Electrical and Electronics Engineers, Inc.
Provided by IHS under license with IEEE
No reproduction or networking permitted without license from IHS Not for Resale

b Contact that is closed when the main device is in the standard reference position, commonly referred to as the nonoperated or de-energized position, and that opens when the device assumes the opposite position

The simple designation *a* or *b* is used in all cases where there is no need to adjust the contacts to change position at any particular point in the travel of the main device or where the part of the travel where the contacts change position is of no significance in the control or operating scheme. Hence, the *a* and *b* designations usually are sufficient for circuit breaker auxiliary switches.

Standard reference positions of some typical devices are given in Table 1.

Table 1— Standard reference positions of devices

Device	Standard reference position
Adjusting means (see note 1)	Low or down position
Clutch	Disengaged position
Contactor (see note 2)	De-energized position
Contactor (latched-in type)	Main contacts open
Density switch	Standard reference
Disconnecting switch	Main contacts open
Flow detector (see note 3)	Lowest flow
Gate	Closed position
Level detector (see note 3)	Lowest level
Load-break switch	Main contacts open
Power circuit breaker	Main contacts open
Power electrodes	Maximum gap position
Pressure switch (see note 3)	Lowest pressure
Reclosure	Main contactor open
Relay (see note 2)	De-energized position
Relay (latched-in type)	See 4.5.3
Rheostat	Maximum resistance position
Speed switch (see note 3)	Lowest speed
Tap changer	Center tap
Temperature relay (see note 3)	Lowest temperature
Turning gear	Disengaged position
Vacuum switch (see note 3)	Lowest pressure that is highest vacuum
Valve	Closed position
Vibration detector (see note 3)	Minimum vibration

NOTES:
1)—These may be speed, voltage, current, load, or similar adjusting devices comprising rheostats, springs, levers, or other components for the purpose.
2)—These electrically operated devices are of the nonlatched-in type, whose contact position is dependent only upon the degree of energization of the operating, restraining, or holding coil or coils that may or may not be suitable for continuous energization. The de-energized position of the device is that with all coils de-energized
3)—The energizing influences for these devices are considered to be, respectively, rising temperature, rising level, increasing flow, rising speed, increasing vibration, and increasing pressure.

4.1.1 Auxiliary switches with defined operating position

When it is desired to have the auxiliary, position, or limit switch designation, it should be indicated at what point of travel the contacts change position, as is sometimes necessary in the case of valves and for other main devices. Then an additional letter (or a percentage figure, if required) is added (as a suffix to the *a* or *b* designation) for this purpose.

 Copyright © 1997 IEEE All Rights Reserved

Copyright The Institute of Electrical and Electronics Engineers, Inc.
Provided by IHS under license with IEEE
No reproduction or networking permitted without license from IHS Not for Resale

For a valve, the method of designating such position switches is shown in the diagram and legend in Figure 1. There are thus two points to consider in visualizing or describing the operation of these position switches. The first is whether the contact is *a* or *b* as indicated by the first letter. The second is where the contact changes position, either at or near:

a) The closed position of the valve *c*,
b) The open position of the valve *o*, or
c) A specified percentage such as 25% of the full open position, for example, a25.

When applied to devices other than valves, gates, circuit breakers, and switches for which the letters *o* and *c* are used for *open* and *closed*, respectively, it will be necessary to use other applicable letters. For example, for such devices as a clutch, turning gear, rheostat, electrode, and adjusting device, the letters *d, e, h, l, u,* and *d*, meaning *disengaged, engaged, high, low, up,* and *down*, respectively, are applicable. Also, other appropriate suffix letters may be used for special *a* or *b* position switches, when these are considered more appropriate and if their meaning is clearly indicated. For example, in the case of an early-opening auxiliary switch on a power circuit breaker, adjusted to open when the breaker is tripped before the main contacts part, it may be thus described and then designated as an *ae* auxiliary switch.

Example:

20*BL*/*ac*

designates an auxiliary switch, on a block valve, that is open only when the valve is fully closed

20*D*/*a*10

designates an auxiliary switch, on a discharge valve, that is open except when the valve is 10% or more open

Copyright © 1997 IEEE All Rights Reserved

--`,,-`-`,,`,,`,`,,`---

Copyright The Institute of Electrical and Electronics Engineers, Inc.
Provided by IHS under license with IEEE
No reproduction or networking permitted without license from IHS Not for Resale

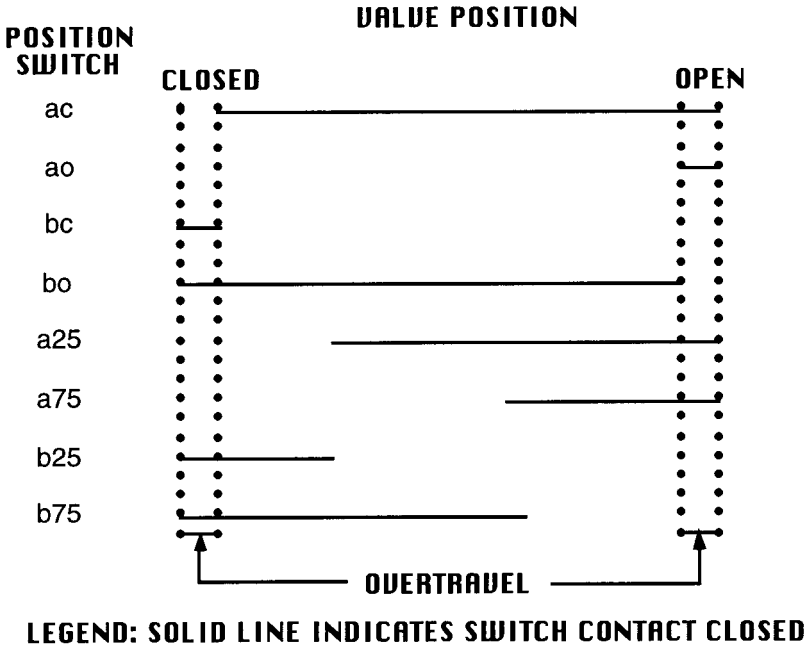

Each of the eight valve positions can be described as follows:

ac, *a* — contact that changes position at or near the closed position of the valve, that is, open only when the valve is fully closed

ao, *a* — contact that changes position at or near the open position of the valve, that is, closed only when the valve is fully open

bc, *b* — contact that changes position at or near the closed position of the valve, that is, closed only when the valve is fully closed

bo, *b* — contact that changes position at or near the open position of the valve, that is, open only when the valve is fully open

a25, *a* — contact that changes position when the valve is 25% open, that is, closed only when the valve is open 25% or more

a75, *a* — contact that changes position when the valve is 75% open, that is, closed only when the valve is open 75% or more

b25, *b* — contact that changes position when the valve is 25% open, that is, closed only when the valve is open less than 25%

b75, *b* — contact that changes position when the valve is 75% open, that is, closed only when the valve is open less than 75%

Figure 1— Valve

4.1.2 Auxiliary switches for devices without a standard reference position

In designating position switches for such a special device as, for example, a fuel transfer device, which has no standard reference or nonoperated position and may be placed in either extreme or any intermediate position for normal operation, *a* and *b* designations are still applicable. However, a percentage figure of the “full open” or “on” position should always be used, and, for the sake of consistency, this percentage should always be in terms of the position that is 50% or more of the “full open” or “on” position, as shown in Figure 2.

 Copyright © 1997 IEEE All Rights Reserved

Copyright The Institute of Electrical and Electronics Engineers, Inc.
Provided by IHS under license with IEEE
No reproduction or networking permitted without license from IHS
Not for Resale

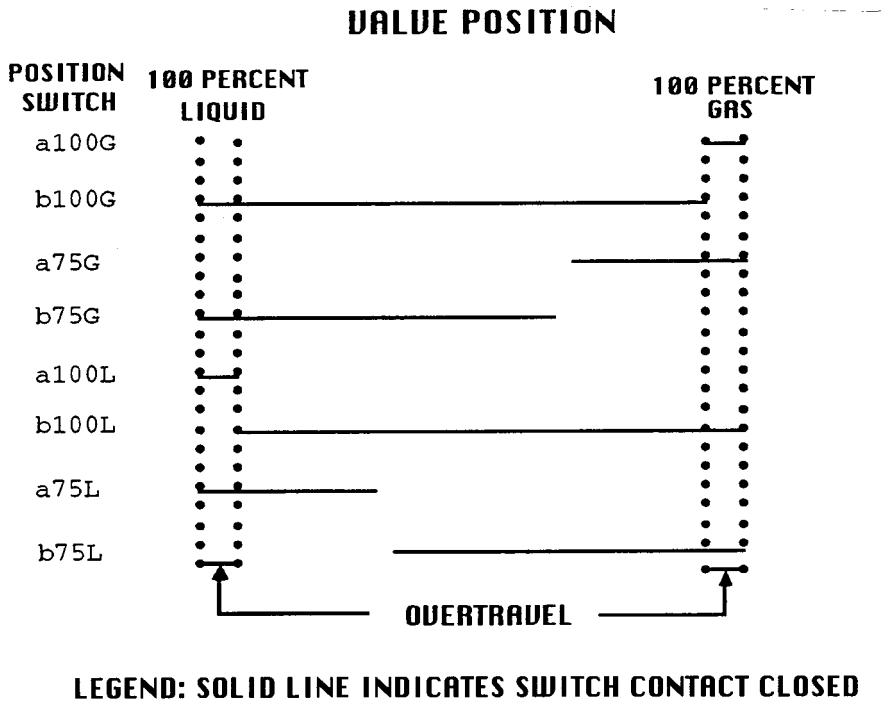

Each of the eight positions can be described as follows:

a100G closed only when 100% of the fuel being supplied is gas

b100G closed only when less than 100% of the fuel being supplied is gas

a75G closed only when 75% or more of the fuel being supplied is gas

b75G closed only when less than 75% of the fuel being supplied is gas

a100L closed only when 100% of the fuel being supplied is liquid

b100L closed only when less than 100% of the fuel being supplied is liquid

a75L closed only when 75% or more of the fuel being supplied is liquid

b75L closed only when less than 75% of the fuel being supplied is liquid

Figure 2— Fuel transfer device

4.2 Limit switches

LS designates a limit switch. This is a position switch that is actuated by a main device, such as a rheostat or valve, at or near its extreme end of travel. Its usual function is to open the circuit of the operating device, but it may also serve to give an indication that the main device has reached an extreme position of travel. The designations *ac*, *ao*, *bc*, and *bo*, given in Figure 1, are actually more descriptive for valve limit switches than such designations as LSC or LSO. Also, in the case of a fuel transfer device as covered in 4.1.2, designations such as a100G, b100G, a100L, and b100L are more descriptive than LS designations. In both cases they indicate whether the specific contact is an *a* contact or a *b* contact.

Copyright © 1997 IEEE All Rights Reserved

Copyright The Institute of Electrical and Electronics Engineers, Inc.
Provided by IHS under license with IEEE
No reproduction or networking permitted without license from IHS
Not for Resale

4.2.1 Auxiliary switches for circuit breaker operating mechanisms

For the mechanically trip-free mechanism of a circuit breaker:

aa Contact that is open when the operating mechanism of the main device is in the nonoperated position and that closes when the operating mechanism assumes the opposite position

bb Contact that is closed when the operating mechanism of the main device is in the nonoperated position and that opens when the operating mechanism assumes the opposite position

The part of the stroke at which the auxiliary switch changes position should, if necessary, be specified in the description. LC is used to designate the latch-checking switch of such a mechanism, which is closed when the mechanism linkage is relatched after an opening operation of the circuit breaker.

4.3 Torque limit switches

This is a switch that is used to open an operating motor circuit at a desired torque limit at the extreme end of travel of a main device, such as a valve. It should be designated as follows:

tqc Torque limit switch, opened by a torque-responsive mechanism, that stops valve closing

tqo Torque limit switch, opened by a torque-responsive mechanism, that stops valve opening

4.4 Other switches

If several similar auxiliary, position, and limit switches are present on the same device, they should be designated with such supplementary numerical suffixes as 1, 2, 3, etc., when necessary.

4.5 Representation of device contacts on electrical diagrams

4.5.1 Contacts with defined reference position

On electrical diagrams, the *b* contacts of all devices as described in 4.1 to 4.1.3, including those of relays and those with suffix letters or percentage figures, should be shown as closed contacts, and all *a* contacts should be shown as open contacts. The use of the single letters *a* and *b* with the contact representation is generally superfluous on the diagrams. However, these letters are a convenient means of reference in the text of instruction books, articles, and other publications (see Figure 3, Figure 4, and IEEE Std 315-1975 for representation of closed and open contacts on electrical diagrams).

4.5.2 Contact opening and closing settings

The opening and closing settings of the contacts and auxiliary, position, and limit switches, covered in 4.1 through 4.3 should, when necessary for the ready understanding of the operation of the devices in the equipment, be indicated on the elementary diagram for each such contact. In the case of relay contacts, this indication would consist of the numerical settings; in the case of the switches, this indication would consist of a chart similar to those shown in Figures 1 and 2, respectively.

4.5.3 Devices without a standard reference position

For those devices that have no de-energized or nonoperated position, such as manually-operated transfer or control switches (including those of the spring-return type) or auxiliary position indicating contacts on the housings or enclosures of a removable circuit breaker unit, the preferred method of representing these contacts is normally open. Each contact should, however, be identified on the elementary diagram as to when it closes.[7] For example, the contacts of the manual-automatic transfer switch, device 43, which are closed in the automatic position, would be identified

 Copyright © 1997 IEEE All Rights Reserved

Copyright The Institute of Electrical and Electronics Engineers, Inc.
Provided by IHS under license with IEEE
No reproduction or networking permitted without license from IHS Not for Resale

with the letter A, and those that are closed in the manual position-would be identified with the letter M; and the auxiliary position switches on the housing 52 TOC of a removable circuit breaker unit, which are open when the unit is not in the connected position, may be identified by

52*TOC*/*a*

and those that are closed when the unit is not in the connected position may be identified by

52*TOC*/*b*

as shown in IEEE Std C37.20.1-1993 and IEEE Std C37.20.2-1993 .

In the case of latched-in or hand-reset relays, which operate from protective devices to perform the shutdown of a piece of equipment and hold it out of service, the contacts should preferably be shown in the normal, nonlockout position. In general, any devices, such as electrically operated latched-in relays, that have no de-energized or nonoperated position and have not been specifically covered in the above paragraphs or under 4.1, should have their contacts shown in the position most suitable for the proper understanding of the operation of the devices in the equipment. Sufficient description should be present, as necessary, on the elementary diagram to indicate the contact operation.[8]

4.5.4 Recommended representation of device functions and contacts on drawings

The typical elementary diagrams in Figures 3 and 4 illustrate the recommended method of representing the contacts of typical devices on an elementary diagram. All other representations and features, except those specifically covered in other standards, are illustrative only and are not necessarily generally accepted practice.

[7]This information should be included on that part of the elementary diagram either with the device symbol or with the contacts in the circuit diagram itself, and where most convenient for the proper understanding of the operation of the devices and equipment.
[8]See Footnote 7.

Copyright © 1997 IEEE All Rights Reserved

Copyright The Institute of Electrical and Electronics Engineers, Inc.
Provided by IHS under license with IEEE
No reproduction or networking permitted without license from IHS Not for Resale

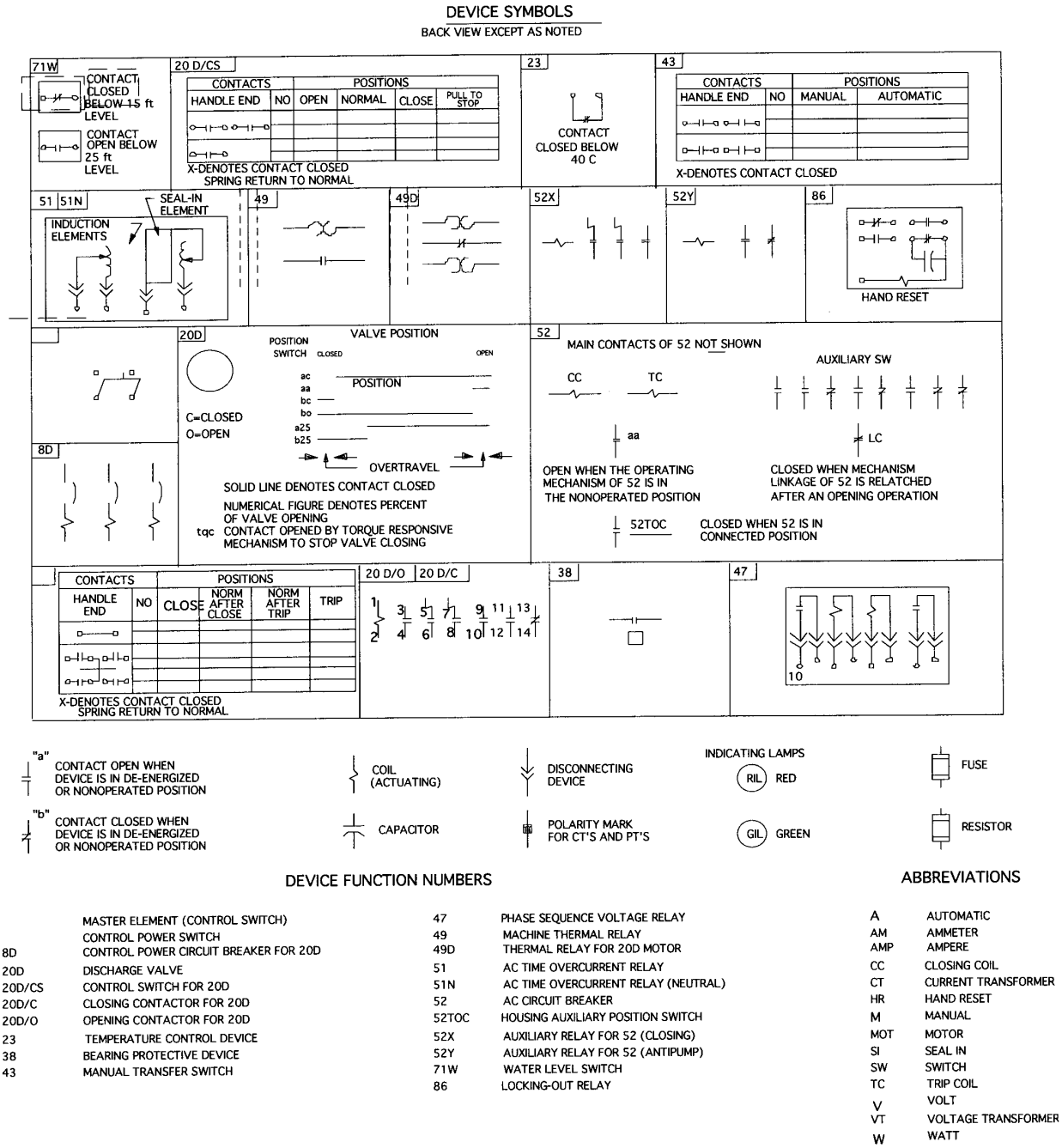

DEVICE FUNCTION NUMBERS

	MASTER ELEMENT (CONTROL SWITCH)
	CONTROL POWER SWITCH
8D	CONTROL POWER CIRCUIT BREAKER FOR 20D
20D	DISCHARGE VALVE
20D/CS	CONTROL SWITCH FOR 20D
20D/C	CLOSING CONTACTOR FOR 20D
20D/O	OPENING CONTACTOR FOR 20D
23	TEMPERATURE CONTROL DEVICE
38	BEARING PROTECTIVE DEVICE
43	MANUAL TRANSFER SWITCH
47	PHASE SEQUENCE VOLTAGE RELAY
49	MACHINE THERMAL RELAY
49D	THERMAL RELAY FOR 20D MOTOR
51	AC TIME OVERCURRENT RELAY
51N	AC TIME OVERCURRENT RELAY (NEUTRAL)
52	AC CIRCUIT BREAKER
52TOC	HOUSING AUXILIARY POSITION SWITCH
52X	AUXILIARY RELAY FOR 52 (CLOSING)
52Y	AUXILIARY RELAY FOR 52 (ANTIPUMP)
71W	WATER LEVEL SWITCH
86	LOCKING-OUT RELAY

ABBREVIATIONS

A	AUTOMATIC
AM	AMMETER
AMP	AMPERE
CC	CLOSING COIL
CT	CURRENT TRANSFORMER
HR	HAND RESET
M	MANUAL
MOT	MOTOR
SI	SEAL IN
SW	SWITCH
TC	TRIP COIL
V	VOLT
VT	VOLTAGE TRANSFORMER
W	WATT

Figure 3— Typical elementary diagram

Copyright © 1997 IEEE All Rights Reserved

Copyright The Institute of Electrical and Electronics Engineers, Inc.
Provided by IHS under license with IEEE
No reproduction or networking permitted without license from IHS
Not for Resale

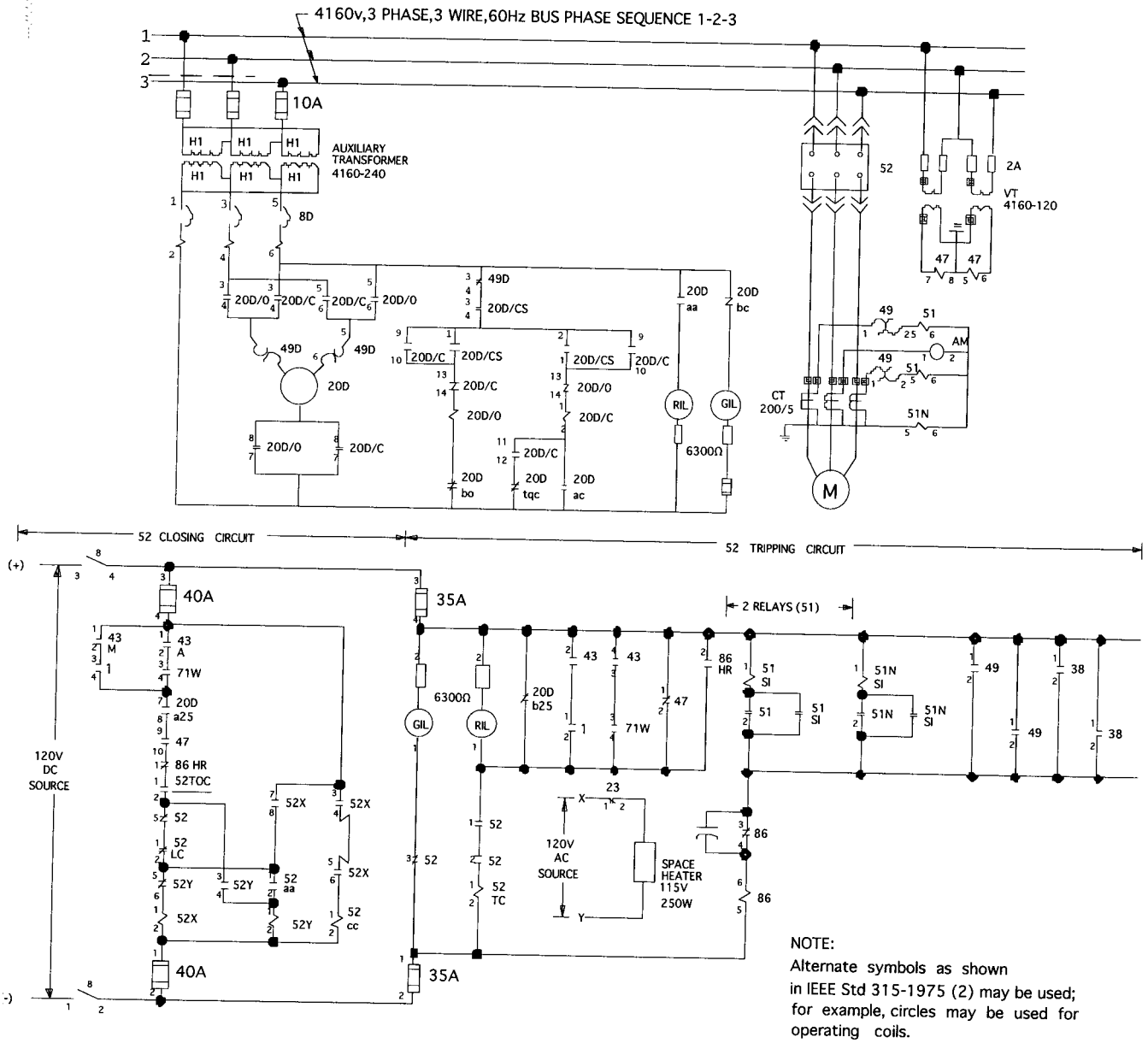

Figure 4— Typical elementary diagram

Copyright © 1997 IEEE All Rights Reserved

Copyright The Institute of Electrical and Electronics Engineers, Inc.
Provided by IHS under license with IEEE
No reproduction or networking permitted without license from IHS
Not for Resale

Annex A Samples of device function numbers

(Informative)

A.1 Device 11—Multi-function relay representations

Two commonly used representations of multi-function relays are shown for use on one-line meter and relay diagrams. The user must determine which is best for the application. Recommended nomenclature for the multi-function relays in the examples as follows:

11L-xxxx

where

11	denotes multi-function relay,
L	is the zone of protection: line (generator, bus, etc.),
xxxx	is the model abbreviation (i.e., DLP, MDAR, 321, OPTI, etc.)

First representation method—Empty box

The “empty box” method minimizes space requirements while showing all inputs and outputs from the relay. It does not require drafting changes when an element is removed or placed in-service or when a software upgrade adds additional capabilities. It does not give the user a visual indication of functions in use, but provides the relay model, which indicates function availability for those familiar with the relay model.

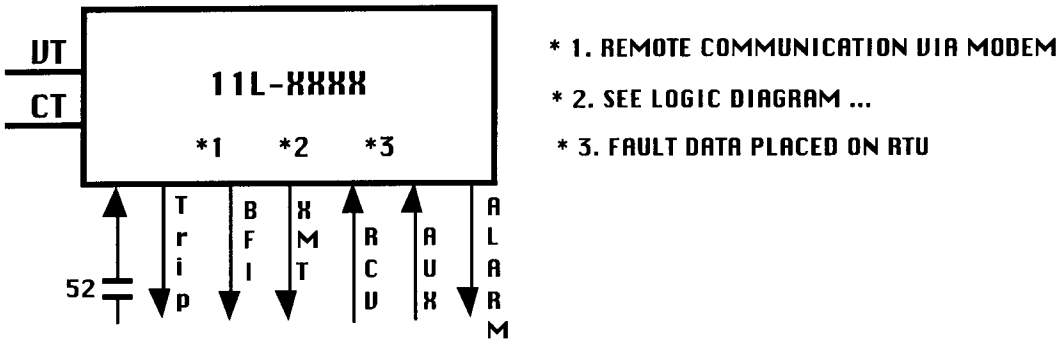

Figure A.1 —Empty box

 Copyright © 1997 IEEE All Rights Reserved

Copyright The Institute of Electrical and Electronics Engineers, Inc.
Provided by IHS under license with IEEE
No reproduction or networking permitted without license from IHS Not for Resale

Second representation method—Filled box

The “filled box” method provides visual indication of the functions being used. Contiguous space requirements can become very large depending on functions in use. Disabling or enabling functions and software upgrades may require drafting changes.

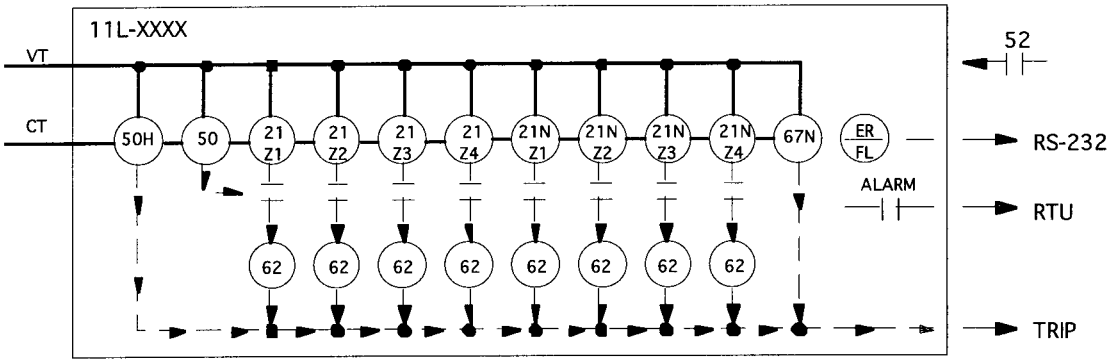

21-Z1 through Z4	is the phase distance relay for zone 1 through 4
21N-Z1 through Z4	is the ground distance relay for zone 1 through 4
50H	is the high instantaneous overcurrent relay
50	is the instantaneous overcurrent relay
62	is the time delay for tripping
67N	is the directional overcurrent relay in neutral
ER/FL	is the event recorder/ fault locator

Figure A.2 —Filled box

A.2 Device 64—Ground detector relay applications

Figures through are samples showing the preferred use of the suffixes N and G.

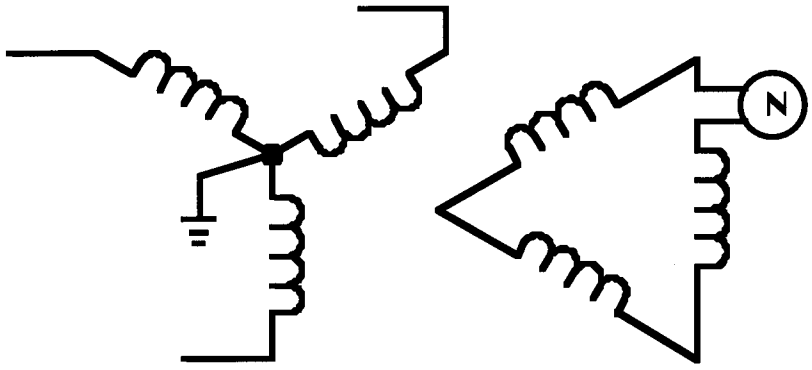

Figure A.3 —Broken delta connection in VT secondary circuit

Copyright © 1997 IEEE All Rights Reserved

Copyright The Institute of Electrical and Electronics Engineers, Inc.
Provided by IHS under license with IEEE
No reproduction or networking permitted without license from IHS Not for Resale

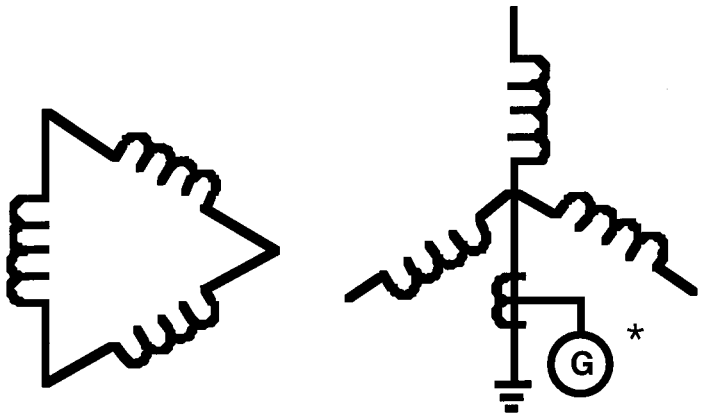

* While 'G' is preferred, past practice makes 'N' acceptable.

Figure A.4 —Delta-wye transformer

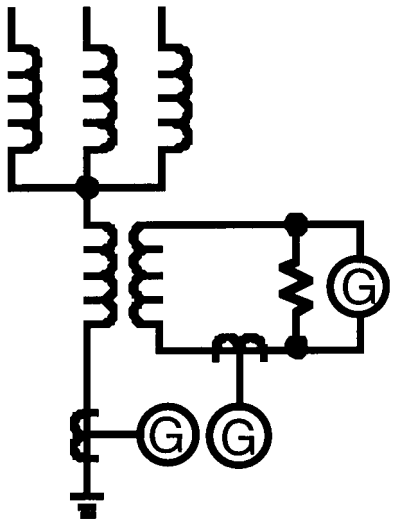

Figure A.5 —Generator high-impedance ground

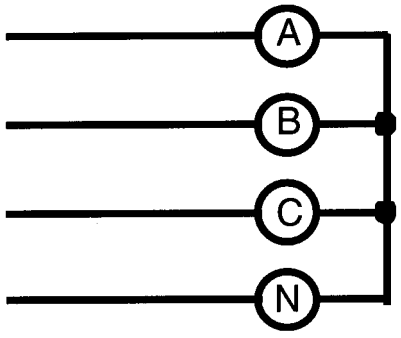

Figure A.6 —Residual connection in ct secondary circuit (or internally derived by device)

Copyright © 1997 IEEE All Rights Reserved

Copyright The Institute of Electrical and Electronics Engineers, Inc.
Provided by IHS under license with IEEE
No reproduction or networking permitted without license from IHS
Not for Resale

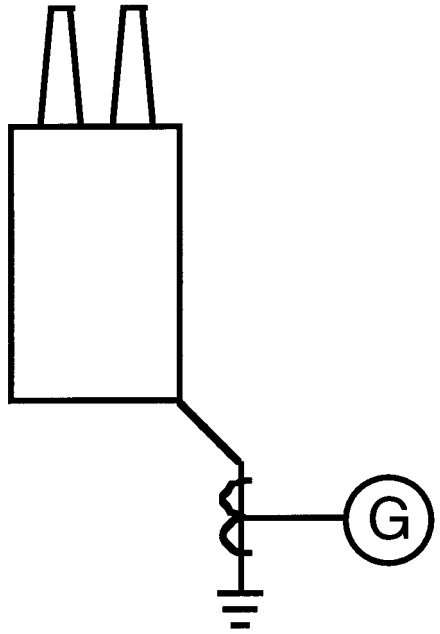

Figure A.7 —Tank grounds (breaker, CT, etc.)

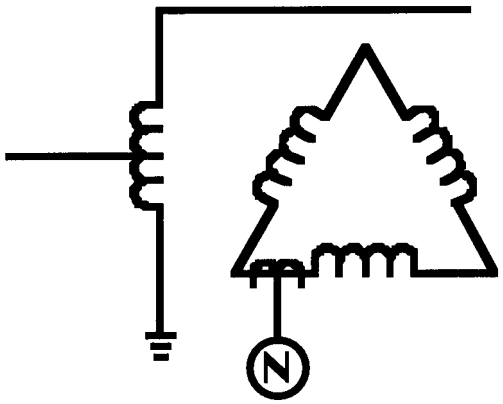

Figure A.8 —Delta tertiary winding of auto transformer

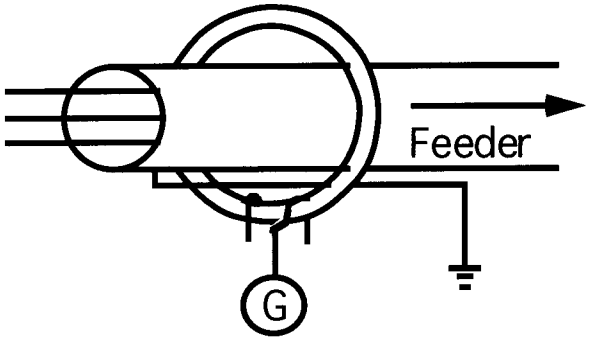

Figure A.9 —Window (donut) current transformer

Copyright © 1997 IEEE All Rights Reserved

Copyright The Institute of Electrical and Electronics Engineers, Inc.
Provided by IHS under license with IEEE
No reproduction or networking permitted without license from IHS
Not for Resale

Annex B Bibliography

(Informative)

Only those standards that are indicated as a mandatory publication to be used in conjunction with this standard can be listed as references in Clause 2 in this standard. There are other publications that provide additional information, and these are listed below.

IEEE Std C37.1-1994 IEEE Standard Definition, Specification, and Analysis of Systems Used for Supervisory Control, Data Acquisition, and Automatic Control (ANSI) .

Copyright © 1997 IEEE All Rights Reserved

--`,-`-`,,`,,`,`,,`---

Copyright The Institute of Electrical and Electronics Engineers, Inc.
Provided by IHS under license with IEEE
No reproduction or networking permitted without license from IHS

Not for Resale