An American National Standard

IEEE Standard Enclosed Field Discharge Circuit Breakers for Rotating Electric Machinery

Sponsor
Switchgear Committee
of the
IEEE Power Engineering Society

Secretariat

Institute of Electrical and Electronics Engineers
NationalElectrical Manufacturers Association

Approved December 9, 1976
Reaffirmed March 22, 1984
Reaffirmed March 21, 1991
Reaffirmed June 12, 2003

IEEE Standards Board

Approved February 15, 1979
Reaffirmed June 30, 1986
Reaffirmed August 6, 1991

American National Standards Institute

Published by

Institute of Electrical and Electronics Engineers, Inc

345 East 47th Street, New York, NY 10017

Copyright The Institute of Electrical and Electronics Engineers, Inc.
Provided by IHS under license with IEEE
No reproduction or networking permitted without license from IHS
Not for Resale

American National Standard

An American National Standard implies a consensus of those substantially concerned with its scope and provisions. An American National Standard is intended as a guide to aid the manufacturer, the consumer, and the general public. The existence of an American National Standard does not in any respect preclude anyone, whether he has approved the standard or not, from manufacturing, marketing, purchasing, or using products, processes, or procedures not conforming to the standard. American National Standards are subject to periodic review and users are cautioned to obtain the latest editions.

CAUTION NOTICE: This American National Standard may be revised or withdrawn at any time. The procedures of the American National Standards Institute require that action be taken to reaffirm, revise, or withdraw this standard no later than five years from the date of publication. Purchasers of American National Standards may receive current information on all standards by calling or writing the American National Standards Institute.

©Copyright 1980 by

The Institute of Electrical and Electronics Engineers, Inc

No part of this publication may be reproduced in any form, in an electronic retrieval system or otherwise, without the prior written permission of the publisher.

Copyright The Institute of Electrical and Electronics Engineers, Inc.
Provided by IHS under license with IEEE
No reproduction or networking permitted without license from IHS
Not for Resale

Foreword

(This Foreword is not a part of ANSI/IEEE C37.18-1979, American National Standard Enclosed Field Discharge Circuit Breakers for Rotating Electric Machinery.)

This standard was first published in 1962 as IEEE Publication No 90 for trial use. It was also published as NEMA Std SG3-1965, Low-Voltage Power. After a period of industry use the material was reviewed and revised and published as USA Std 37.18-1968 (R1975), Requirements for Field Discharge Circuit Breakers for Rotating Electric Machinery, and USA Std C37.16a-1968, Supplement to USA Std C37.16-1963, Preferred Ratings and Related Requirements for Low-Voltage Power Circuit Breakers. This revision of the material, ANSI/IEEE C37.18-1979, which replaces ANSI C37.18-1968, was developed by the IEEE Working Group of the Low-Voltage Switchgear Devices Subcommittee.

The major revisions which have been made in updating this standard to reflect the changing state of the art are the addition of material concerned with solid-state sources of excitation and additional ratings. The preferred ratings and related requirements are still contained in Tables 7, 7A, and 14 of ANSI C37.16-1979, Preferred Ratings, Related Requirements, and Application Recommendations for Low-Voltage Power Circuit Breakers and AC Power Circuit Protectors (revision and consolidation of C37.15-1954 and C37.16-1970); although Section 7, Test Procedures, and Section 9, Application have been extensively revised to reflect present day requirements.

This publication represents standard practice in the United States relating to field discharge circuit breakers for use in field circuits of rotating electric machinery such as generators, motors, synchronous condensers, or exciters. American National Standards covering additional requirements are: ANSI C37.16-1979; Switchgear Assemblies, Including Metal-Enclosed Bus, ANSI/IEEE C37.20-1969, Definitions for Power Switchgear, ANSI C37.100-1972 (IEC 50-16) (IEC 277); Standard Techniques for High-Voltage Testing, IEEE Std 4-1978, (IEC 52).

Molded-case circuit breakers are covered by other standards but in some instances may be able to meet the requirements of this standard.

The Standards Committee on Power Switchgear, C37, which reviewed and approved this standard, had the following personnel at the time of approval:

C. L. Wagner, *Chair*
J. P. Lucas, *Secretary*
J. E. Beehler *(Executive Vice-Chairman of High Voltage Switchgear Standards)*
W. E. Laubach *(Executive Vice-Chairman of Low Voltage Switchgear Standards)*
S. H. Telander *(Executive Vice-Chairman of IEC Activities)*

Organization Represented	***Name of Representative***
Association of American Railroads	*Vacant*
Association of Iron and Steel Engineers	J. M. Tillman
Electric Light and Power Group	K. G. Adgate J. E. Beehler R. L. Capra (*Alt*) H. G. Darron H. F. Frus K. D. Hendrix R. L. Lindsey (*Alt*) E. E. Ramm (*Alt*) F. R. Solis

Copyright The Institute of Electrical and Electronics Engineers, Inc.
Provided by IHS under license with IEEE
No reproduction or networking permitted without license from IHS
Not for Resale

Organization Represented	*Name of Representative*
Institute of Electrical and Electronics Engineers	M. J. Beachy (*Alt*) R. N. Bell (*Alt*) H. H. Fahnoe R. E. Friedrich M. J. Maier C. A. Mathews (*Alt*) D. C. Musgrave (*Alt*) G. W. Walsh H. F. White
National Electrical Manufacturers Association	A. P. Colaiaco R. W. Dunham D. G. Portman G. A. Wilson W. R. Wilson
Tennessee Valley Authority	Robert C. St. Clair
Testing Laboratory Group	L. Frier E. J. Huber R. W. Seelbach (*Alt*)
U.S. Department of the Army	Robert H. Bruck
U.S. Department of the Interior Bureau of Reclamation	Edward M. Tomsic
U.S. Department of Defense, Defense Communications Agency	*Vacant*
U.S. Department of the Navy, Naval Facilities Engineering Command	D. M. Hannemann

The Working Group of the IEEE Low-Voltage Switchgear Devices Subcommittee responsible for the current revivsion are:

M. B. Fornwalt, *Chair*
H. H. Connelley, *Secretary*

R. J. Alton	J. M. Clark	W. J. Lordeon
L. L. Baird	M. L. Crenshaw	R. A. McMaster
	R. E. Gorman	

The members of the IEEE Low-Voltage Switchgear Devices Subcommittee who reviewed and approved this standard are:

R. N. Bell, *Chair*
H. H. Connelley, *Secretary*

R. J. Alton	E. J. Huber	F. J. Shields
L. L. Baird	J. J. Komisky	J. Stewart
A. N. Eliasen	R. A. McMaster	J. R. Truitt
W. H. Ferguson	W. A. Mathews	J. P. Werner
	V. A. Mortenson	

Copyright The Institute of Electrical and Electronics Engineers, Inc.
Provided by IHS under license with IEEE
No reproduction or networking permitted without license from IHS
Not for Resale

When this standard was approved December 9, 1976, the IEEE Standards Board had the following membership:

William R. Kruesi, *Chair*
Irvin N. Howell, Jr, *Vice Chair*
Ivan G. Easton, *Secretary*

William E. Andrus
Jean Jacques Archambault
Dale R. Cochran
Warren H. Cook
Louis Costrell
Jay Forster
Joseph L. Koepfinger
Irving Kolodny
Benjamin J. Leon
Anthony C. Lordi
John P. Markey
Thomas J. Martin
Donald T. Michael
Voss A. Moore
William S. Morgan
William J. Neiswender
Gustave Shapiro
Ralph M. Showers
Robert A. Soderman
Leonard W. Thomas, Sr
Charles L. Wagner
William T. Wintringham†

†Deceased

Copyright The Institute of Electrical and Electronics Engineers, Inc.
Provided by IHS under license with IEEE
No reproduction or networking permitted without license from IHS
Not for Resale

CLAUSE PAGE

1. Scope 1

2. Definitions 2

3. Service Conditions 2

4. Ratings 3

4.1 Rating Information 3
4.2 Rated Nominal Voltage Class 4
4.3 Rated Short-Time Voltage 4
4.4 Rated Maximum Interrupting Voltage 4
4.5 Rated Continuous Current 4
4.6 Short-Time Current Ratings 5
4.7 Interrupting Current Ratings 5
4.8 Rated Making Current of the Discharge Contacts 6
4.9 Rated Control Voltage 6

5. Functional Components 6

5.1 Nameplate(s) 7
5.2 Contact Position Indicator 7
5.3 Stored Energy Indicator 7

6. Temperature Limitations and Classification of Insulating Materials 7

6.1 Temperature Limits 7
6.2 Limits of Observable Temperature Rise 8
6.3 Classification of Insulating Materials 8

7. Insulation (Dielectric) Withstand Voltage Requirements 9

7.1 Field Discharge Circuit Breakers 9
7.2 Dielectric Test Procedures and Method of Voltage Measurement 9

8. Test Requirements 10

8.1 Classification of Tests 10
8.2 Design Tests 10
8.3 Production Tests 15

9. Application Guide 16

9.1 General 16
9.2 Functions Performed by a Field Discharge Circuit Breaker 17
9.3 Selection of Field Discharge Resistor 19
9.4 Selection of Field Discharge Circuit Breaker 20

10. Revision of American National Standards Referred to in this Standard 24

Copyright The Institute of Electrical and Electronics Engineers, Inc.
Provided by IHS under license with IEEE
No reproduction or networking permitted without license from IHS Not for Resale

An American National Standard

IEEE Standard Enclosed Field Discharge Circuit Breakers for Rotating Electric Machinery

1. Scope

This standard applies to all low-voltage power-circuit breakers that are intended for use in field circuits of apparatus such as generators, motors, synchronous condensers, or exciters and embodying contacts for establishing field discharge circuits.

NOTE — In this standard, the use of the term "circuit breaker" shall be considered to mean "field discharge circuit breaker used in enclosures for rotating electric machinery."

In performing their function of interrupting field circuits of rotating electric machinery, field discharge circuit breakers are subject to the following conditions not met within the interruption of ordinary direct-current power circuits.

1) In alternating-current machine field circuits, in addition to the problems usually encountered in switching highly inductive direct-current circuits, there is superimposed upon the voltage generated by the exciter, a voltage induced in the field windings by the transient current in the machine armature under alternating-current short-circuit conditions. These result in large pulsating currents in the field circuit as illustrated in Fig 1.
2) Due to the large amount of magnetic energy stored in the machine field circuit, the interruption of the circuit results in an unusually high transient voltage under alternating-current short-circuit conditions, unless special means are provided for dissipating the energy.
3) A discharge resistor must be connected across the terminals of the machine field by the discharge contacts of the circuit breaker just prior to disconnecting the field from its excitation source in order to provide for dissipation of the stored energy of the machine field and to minimize the transient voltage. The voltage across the field discharge circuit breaker main contacts following interruption of the excitation source current is illustrated in Fig 2.
4) In addition to the above conditions, there is the usual direct-current short-circuit condition wherein the field circuit may become short-circuited.

To cope with these unique conditions, this standard for field discharge breakers has been developed to establish the rating structure and test requirements not encountered in other ANSI Standards[1] which apply to other low-voltage circuit breakers.

The dielectric test values given in Table 7A, ANSI C37.16-1979, Preferred Ratings, Related Requirements, and Application Recommendations for Low-Voltage Power Circuit Breakers and AC Power Circuit Protectors, reflect the change in dielectric test requirements in ANSI C50.13-1977 Requirements for Cylindrical Rotor Synchronous Generators.

[1]American National Standards are available front the American National Standards Institute, 1430 Broadway, New York, N.Y. 10018.

Copyright © 1980 IEEE All Rights Reserved

Copyright The Institute of Electrical and Electronics Engineers, Inc.
Provided by IHS under license with IEEE
No reproduction or networking permitted without license from IHS
Not for Resale

2. Definitions

The definitions of terms in this standard, or in other ANSI Standards referred to in this document, are not intended to embrace all legitimate meanings of the terms. They are applicable only to the subject treated in this standard.

For additional definitions, see ANSI C37.100-1972, Definitions for Power Switchgear and IEEE Std 421-1972, Criteria and Definitions for Excitation Systems for Synchronous Machines.

circuit breaker, field discharge: A circuit breaker having main contacts for energizing and deenergizing the field of a generator, motor, synchronous condenser, or rotating exciter, and having discharge contacts for short-circuiting the field through the discharge resistor at the instant preceding the opening of the circuit breaker main contacts. The discharge contacts also disconnect the field from the discharge resistor at the instant following the closing of the main contacts. For direct-current generator operation, the discharge contacts may open before the main contacts close.[2]

NOTE — When used in the main field circuit of an alternating or direct-current generator, motor, or synchronous condenser, the circuit breaker is designated as a main field discharge circuit breaker. When used in the field circuit of the rotating exciter of the main machine, the circuit breaker is designated as an exciter field discharge circuit breaker.

voltage class, rated nominal: The voltage to which operating and performance characteristics are referred.[3]

voltage, exciter-ceiling: The maximum voltage that may be attained by an exciter under specifield conditions.[3]

voltage, rated maximum interrupting of main contacts: The maximum dc voltage, including voltage induced in the machine field by current in the machine armature, at which the field discharge circuit breaker main contacts are required to interrupt the excitation source current. The magnitude of the dc component of the total voltage across the main contacts is equal to the displacement of the axis.[3] (See Fig 2 for illustration of the direct component of voltage under 3-phase fault conditions.)

voltage, rated short-time of main contacts: The highest dc voltage at which the circuit breaker main contacts shall be required to interrupt exciter short-circuit currents.[3]

3. Service Conditions

A circuit breaker conforming to this standard shall be suitable for operation up to and including all of its standard ratings, providing that:

1) The temperature of the air surrounding the circuit breaker is not below −5°C
   NOTE — When properly applied in metal-enclosed power switchgear or individual enclosures, a circuit breaker will operate within the limits of ambient temperature of the air surrounding the enclosure as specified in ANSI/IEEE C37.20-1969, Switchgear Assemblies Including Metal-Enclosed Bus (1974 consolidated edition).
2) The altitude does not exceed 2000 m (6600 ft)
3) The relative humidity of the air surrounding the circuit breaker is such that there will be no condensation on the circuit breaker parts at any time
4) None of the service conditions listed in 9.4.8.2 prevail.

Whenever the service conditions depart from those defined in this section, consultation between the user and manufacturer is recommended. Some of the service conditions which may require additional attention are listed in 9.4.8.

[2]This definition differs from that appearing in ANSI C37.100-1972.
[3]At the time this standard was approved, there was no corresponding definition in ANSI C37.100-1972.

Copyright © 1980 IEEE All Rights Reserved

Copyright The Institute of Electrical and Electronics Engineers, Inc.
Provided by IHS under license with IEEE
No reproduction or networking permitted without license from IHS Not for Resale

4. Ratings

4.1 Rating Information

The rating of field discharge circuit breakers is a designated limit of operating characteristics based upon service conditions in Section 3 and shall include the following as applicable:

1) Rated nominal voltage class
2) Rated short-time voltage of main contacts
3) Rated maximum interrupting voltage of main contacts
4) Rated continuous current of main contacts
5) Rated interrupting current of main contacts at rated short-time voltage
6) Rated interrupting current of main contacts at rated maximum interrupting voltage
7) Rated interrupting current of the discharge contacts at rated nominal voltage
8) Rated $^1/_2$ s short-time current of the main contacts
9) Rated 15 s short-time current of the discharge contacts
10) Rated $^1/_2$ s short-time current of the discharge contacts
11) Rated making current of the discharge contacts
12) Rated control voltage(s)

The designated ratings in ANSI C37.16-1979 are preferred but are not to be considered restrictive.

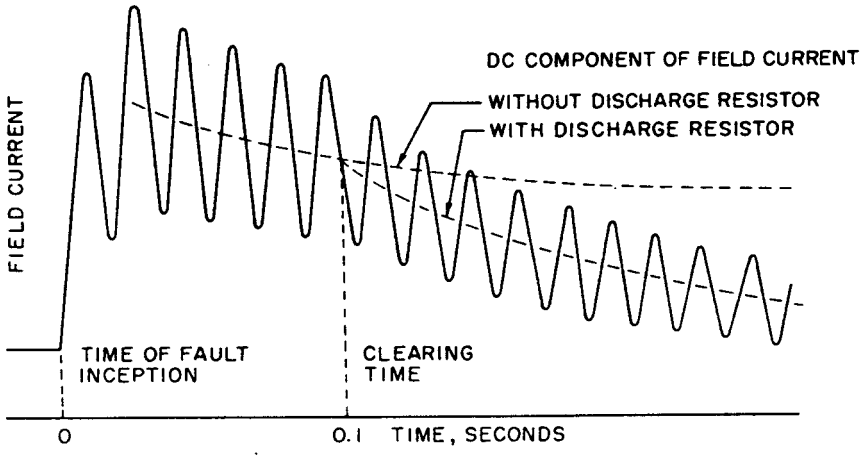

Figure 1 —Field Current with 3-Phase Fault on AC Machine Armature Circuit

Copyright © 1980 IEEE All Rights Reserved

Copyright The Institute of Electrical and Electronics Engineers, Inc.
Provided by IHS under license with IEEE
No reproduction or networking permitted without license from IHS
Not for Resale

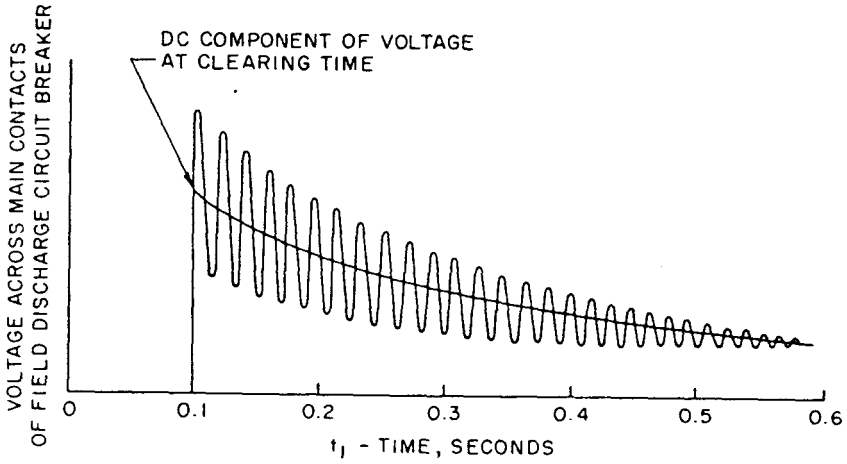

Figure 2 —Voltage Across Field Discharge Circuit Breaker Main Contacts Following Interruption of Excitation Source Current

4.2 Rated Nominal Voltage Class

The rated nominal voltage class of a field discharge circuit breaker is the voltage to which operating and performance characteristics shall be referred, and is the voltage to which dielectric characteristics of the circuit breaker are related. Nominal voltage class ratings are: 250, 375, 500, 750 and 1000 V dc.

4.3 Rated Short-Time Voltage

The rated short-time voltage of a field discharge circuit breaker is the highest dc voltage at which the circuit breaker main contacts shall be required to interrupt exciter short-circuit current. Circuit breakers shall have short-time voltage ratings of 350, 500, 700, 750 and 1000 V dc.

4.4 Rated Maximum Interrupting Voltage

The rated maximum interrupting voltage of a field discharge circuit breaker is the highest direct component of voltage[4] at which the main contacts of the breaker shall be required to interrupt the dc component of field current produced by a fault on the main machine armature.

4.5 Rated Continuous Current

The rated continuous current of the main contacts of a field discharge circuit breaker is the current that it shall be required to carry without having the temperature of its parts exceed the values listed in Section 6, when the circuit breaker is tested in accordance with Section 8.

NOTE — The rated continuous current of a field discharge circuit breaker applies to the main contacts and not the discharge contact.

[4]For illustration of dc component of field current and direct component of voltage, see Figs 1 and 2.

Copyright © 1980 IEEE All Rights Reserved

--`,,`-`-`,,`,,`,`,,`---

Copyright The Institute of Electrical and Electronics Engineers, Inc.
Provided by IHS under license with IEEE
No reproduction or networking permitted without license from IHS
Not for Resale

4.6 Short-Time Current Ratings

The short-time current ratings of the field discharge circuit breaker main and discharge contacts are established on the basis that these contacts are required to carry a given direct current for a specified time interval without adversely affecting either the circuit breaker's temperature rise for main contacts, at rated continuous current, or the circuit breaker's interrupting performance.

NOTE — The short-time current ratings are given in direct current. Short-time current ratings of the discharge contacts include the effects of the alternating-current component in the field current under machine armature fault conditions.

4.6.1 Rated One-Half Second Short-Time Current of Main Contacts

The rated $^1/_2$ s short-time current of the main contacts of a field discharge circuit breaker is the maximum direct current that the circuit breaker main contacts shall be required to carry for a $^1/_2$ s period of time.

NOTE — The rated $^1/_2$ s short-time current of the main contacts is based on the current-carrying requirements of the field discharge circuit breaker with a fault on the excitation circuit. The time duration is $^1/_2$ s.

4.6.2 Rated 15 Second Short-Time Current of the Discharge Contacts

The rated 15 s short-time current of the discharge contacts is the highest direct-current which the field discharge contacts shall be required to carry for a 15 s period of time.

NOTE — The rated 15 s short-time current of the discharge contacts is based on the application requirements for starting synchronous motors.

4.6.3 Rated $^1/_2$ Second Short-Time Current of the Discharge Contacts

The rated $^1/_2$ s short-time current of the discharge contacts is the highest direct-current that the field discharge contacts shall be required to carry for a $^1/_2$ s period of time.

NOTE — The rated $^1/_2$ s short-time current of the discharge contacts is based on the generator application requirements considering a 3-phase fault on the machine armature circuit.

4.7 Interrupting Current Ratings

Interrupting current ratings are based on interrupting requirements of the field discharge circuit breaker for fault conditions in the excitation circuit and fault conditions in the machine armature circuit. See Table 7 of ANSI C37.16-1979.

4.7.1 Rated Interrupting Current of Main Contacts at Rated Short-Time Voltage

The rated interrupting current at rated short-time voltage is the maximum value of direct-current which the main contacts of the field discharge circuit breaker shall be required to interrupt at rated short-time voltage under conditions prescribed in Section 8.

NOTE — This rating is to satisfy fault conditions in the excitation circuit.

4.7.2 Rated Interrupting Current of Main Contacts at Rated Maximum Interrupting Voltage

The rated interrupting current at rated maximum interrupting voltage is the maximum value of direct-current which the circuit breaker main contacts shall be required to interrupt at rated maximum interrupting voltage under conditions prescribed in Section 8.

Copyright © 1980 IEEE All Rights Reserved

Copyright The Institute of Electrical and Electronics Engineers, Inc.
Provided by IHS under license with IEEE
No reproduction or networking permitted without license from IHS
Not for Resale

NOTE — The magnitude of the dc component of the total field current is equal to the displacement of the axis of symmetrical ac component from the reference axis. (See Fig 1 for illustration of the direct component of field current under 3-phase fault conditions.) This rating is to satisfy the fault conditions of the machine armature circuit.

4.7.3 Rated Interrupting Current of Discharge Contacts

The rated interrupting current of the discharge contacts is the maximum value of direct current that the discharge contacts shall be required to interrupt at rated nominal voltage under conditions prescribed in Section 8..

NOTE — This rating is based on the requirements of the discharge contacts to interrupt direct current equal to the continuous current rating of the main contacts of the field discharge circuit breaker with nominal voltage produced by the excitation source.

4.8 Rated Making Current of the Discharge Contacts

The rated making current of the discharge contacts is the peak value of current which the discharge contacts shall be required to close with rated maximum voltage applied across the contacts under conditions prescribed in 8.2.6.

NOTE — This rating is based on the requirement of connecting the discharge resistor across the field terminals following a short circuit of the machine armature terminals.

4.9 Rated Control Voltage

The rated control voltage is the voltage at which the mechanism of the circuit breaker is designed to operate when measured at the control power terminals of the operating mechanism with the highest operating current flowing. Rated control voltages and their ranges for low-voltage power circuit breakers are listed in Table 23, ANSI C37.16-1979.

5. Functional Components

The functional components required for manual and power-operated circuit breakers are listed in Table 1. Additional accessory devices may be available. The manufacturer should be consulted for specific information.

Copyright © 1980 IEEE All Rights Reserved

Copyright The Institute of Electrical and Electronics Engineers, Inc.
Provided by IHS under license with IEEE
No reproduction or networking permitted without license from IHS Not for Resale

Table 1 —Functional Components

Functional Component	Operating Mechanism Type	
	Manual	Power
Manual trip device	X	X
Contact position indicator	X	X
Manually operated mechanism, trip free, with attached operating handle	X*	—
Power-operated mechanism, trip free, with anti-pump feature and maintenance closing device	—	X
Shunt trip device with necessary control auxiliary switches	—	X
Stored energy indicator	X†	X†
Nameplate(s), with markings in accordance with 5.1	X	X

*Manually operated circuit breakers above 2000 A shall be furnished with closing mechanisms that provide for only independent-manual operation.
†Required only on closing mechanisms which provide for stored energy operation when the mechanism can be left in the charged position.

5.1 Nameplate(s)

The following information shall be given on the nameplate(s) of all circuit breakers where applicable:

1) Manufacturer’s name
2) Manufacturer’s type
3) Rated continuous current
4) Rated nominal voltage class
5) Rated control voltage, where applicable
6) Year of manufacture by date or code
7) Identification number

5.2 Contact Position Indicator

The following colors shall be used: *red* background with the word *closed* in contrasting letters to indicate closed contacts; *green* background with the word *open* in contrasting letters to indicate open contacts.

5.3 Stored Energy Indicator

The following colors shall be used: *yellow* background with *black* lettering to indicate charged mechanism; *white* background with *black* lettering to indicate discharged mechanism.

6. Temperature Limitations and Classification of Insulating Materials

6.1 Temperature Limits

The temperature limits, on which the rating of circuit breakers is based, are determined by the characteristics of the insulating materials used and the metals which are used in current-carrying parts and springs.

Copyright © 1980 IEEE All Rights Reserved

--`,,`-`-`,,`,,`,`,,`---

Copyright The Institute of Electrical and Electronics Engineers, Inc.
Provided by IHS under license with IEEE
No reproduction or networking permitted without license from IHS Not for Resale

6.2 Limits of Observable Temperature Rise

The observable temperature rise of the various parts of the circuit breaker above the temperature of the air surrounding the circuit breaker test enclosure, when subjected to temperature tests in accordance with this standard, shall not exceed the values given in Table 2. This table applies only to a circuit breaker having all contacts silver-surfaced, silver, silver alloy, or equivalent, and, in addition, having all conducting joints, moving or fixed, including terminal connections, either silver-surfaced and held mechanically; brazed, welded, or silver-soldered; or fixed rigid mechanical joints surfaced with suitable material other than silver.

6.3 Classification of Insulating Materials

For the purpose of establishing temperature limits, insulating materials shall be classified as follows.

Class 90 Insulation: Materials or combinations of materials such as cotton, silk, and paper without impregnation. Other materials or combinations of materials may be included in this class if, by experience or accepted tests, they can be shown to be capable of operation at 90°C.

Table 2 —Limit of Temperature Rise

	Limit of Temperature Rise Over Air Surrounding Enclosure (°C)	Limit of Total Temperature (°C)
Class 90 insulation	50	90
Class 105 insulation	65	105
Class 130 insulation	90	130
Class 155 insulation	115	155
Class 180 insulation	140	180
Class 220 insulation	180	220
Circuit breaker contacts, conducting joints, and other parts	85	125
Terminal connnections*	55	95

*Terminal connection temperatures are based on connections to bus in metal-enclosed low-voltage power circuit breaker switchgear. If connections are made to cables, recognition must be given to possible thermal limitations of the cable insulation and appropriate measures taken.

Class 105 Insulation: Materials or combinations of materials such as cotton, silk, and paper when suitably impregnated or coated or when immersed in a dielectric liquid such as oil. Other materials or combinations of materials may be included in this class if, by experience or accepted tests, they can be shown to be capable of operation at 105°C.

Class 130 Insulation: Materials or combinations or materials such as mica, glass fiber, asbestos, etc, with suitable bonding substances. Other materials or combinations of materials, not necessarily inorganic, may be included in this class if, by experience or accepted tests, they can be shown to be capable of operation at 130°C.

Class 155 Insulation: Materials or combinations of materials such as mica, glass fiber, asbestos, etc, with suitable bonding substances. Other materials or combinations of materials, not necessarily inorganic, may be included in this class if, by experience or accepted tests, they can be shown to be capable of operation at 155°C.

Class 180 Insulation: Materials or combinations of materials such as silicone elastomer, mica, glass fiber, asbestos, etc, with suitable bonding substances such as appropriate silicone resins. Other materials or combinations of materials may be included in this class if, by experience or accepted tests, they can be shown to be capable of operation at 180°C.

Copyright © 1980 IEEE All Rights Reserved

Copyright The Institute of Electrical and Electronics Engineers, Inc.
Provided by IHS under license with IEEE
No reproduction or networking permitted without license from IHS Not for Resale

Class 220 Insulation: Materials or combinations of materials that by experience or accepted tests can be shown to be capable of operation at 220°C.

Over Class 220 Insulation: Insulation that consists entirely of mica, porcelain, glass, quartz, and similar inorganic materials. Other materials or combinations of materials may be included in this class if, by experience or accepted tests, they can be shown to be capable of operation at temperatures over 220°C.

NOTES:

1 — Insulation is considered to be "impregnated" when a suitable substance provides a bond between components of the structure and also a degree of filling or surface coverage sufficient to give adequate performance under the extremes of temperature, surface contamination (moisture, dirt, etc), and mechanical stress expected in service. The impregnant must not flow or deteriorate enough at operating temperature so as to seriously affect performance in service.

2 — The electrical and mechanical properties of the insulation must not be impaired by the prolonged application of the limiting insulation temperature permitted for the insulation class. The word "impaired" is used here in the sense of causing any change that could disqualify the insulating material from continuously performing its intended function, whether it is creepage spacing, mechanical support, or dielectric barrier action.

3 — In the preceding definitions, the words "accepted tests" are intended to refer to recognized test procedures established for the thermal evaluation of materials by themselves or in simple combinations. Experience or test data used in classifying insulating materials are distinct from the experience or test data derived for the use of materials in complete systems. The thermal endurance of complete systems may be determined by test procedures specified by the responsible technical committees. A material that is classified as suitable for a given temperature in the preceding may be found suitable for a different temperature, either higher or lower, by an insulation system test procedure. For example, it has been found that some materials suitable for operation at one temperature in air may be suitable for a higher temperature when used in a system operated in an inert gas atmosphere.

4 — It is important to recognize that other characteristics, in addition to thermal endurance, such as mechanical strength and moisture resistance, are required in varying degrees in different applications for the successful use of insulating materials.

7. Insulation (Dielectric) Withstand Voltage Requirements

7.1 Field Discharge Circuit Breakers

When tested in accordance with Section 8., they shall be capable of withstanding, without damage, the following ac dielectric test voltages (dry test) for a period of 60 s.

1) The test voltage shall be as described in 8.2.2
2) The frequency of the test voltage shall be as described in 8.2.2
3) In accordance with the test voltages given in Table 7, ANSI C37.16-1979
4) Secondary control wiring shall be capable of withstanding an ac dielectric test voltage of 1500 V rms (except item 5)
5) Motors shall be tested at specified dielectric withstand voltage but no less than 1000 V
6) After interruption of a short-circuit current and before servicing, the withstand test voltage shall be 60 percent of the values given in 7.1 (3), (4), and (5)
7) After storage or installation in the field, a circuit breaker which has not been subjected to a short-circuit current interruption or has been serviced after interruption shall withstand 75 percent of the values listed in 7.1 (3), (4), and (5)

7.2 Dielectric Test Procedures and Method of Voltage Measurement

They shall be in accordance with IEEE Std 4-1978, Standard Techniques for High-Voltage Testing.

Copyright © 1980 IEEE All Rights Reserved

Copyright The Institute of Electrical and Electronics Engineers, Inc.
Provided by IHS under license with IEEE
No reproduction or networking permitted without license from IHS Not for Resale

8. Test Requirements

8.1 Classification of Tests

This section summarizes the various tests which shall be performed on field discharge circuit breakers, and describes methods used in making these tests. These tests are divided into two classifications, design and production.

8.2 Design Tests

Design tests shall be made to determine the adequacy of the design of a particular type, style, or model of a circuit breaker to meet its assigned ratings and to operate satisfactorily under normal service conditions or under unusual conditions if specified. Design tests shall be made only on representative circuit breakers to substantiate the ratings assigned to all circuit breakers of a particular design. Where circuit breakers are to be used in enclosures, the design test shall be made with the circuit breaker in its enclosure, with the exception of the dielectric withstand test.

The test enclosure for a particular framesize circuit breaker shall be the minimum-dimension single-unit enclosure with the smallest electrical spacings recommended by the manufacturer and with enclosure terminals exposed to the ambient air. The manufacturer's enclosure description shall include minimum clearance to ground, location of ventilation openings and their effective area, total enclosure dimensions, and configuration of connections on the enclosure terminals.

8.2.1 Schedule of Tests

Design tests on field discharge circuit breakers shall include the following:

1) AC dielectric withstand voltage test, 8.2.2
2) Continuous current test, 8.2.3
3) Short-time current tests, 8.2.4
   a) On main contacts
   b) On discharge contacts
4) Interrupting test on main contacts, 8.2.5
   a) At rated short-time voltage
   b) At maximum interrupting voltage
5) Making-current test on discharge contacts, 8.2.6
6) Endurance test, 8.2.7

8.2.2 AC Dielectric Withstand Voltage Test

Dielectric withstand tests shall be conducted on completely assembled circuit breakers including secondary control wiring at voltages and under the conditions shown below. All voltages shall be measured in accordance with IEEE Std 4-1978. The potential is to be increased gradually from zero so as to reach the required test value in between 5 and 10 s, and shall be held at that value for 1 min.

The test voltage shall be essentially sinusoidal and applied with a crest value not less than 1.414 times the specified values. The frequency of the test voltage shall be 60 Hz ± 20 percent. If a test transformer of less than 500 VA is used, a suitable voltmeter shall be provided to measure the applied potential directly.

8.2.2.1 Points of Application of Test Voltage

1) With circuit breaker in the open position apply specified voltage as given in 7.1 to primary circuit.
   a) Between live parts, including both line and load terminals, and metal parts that are normally grounded, including terminals for secondary control wiring

Copyright © 1980 IEEE All Rights Reserved

Copyright The Institute of Electrical and Electronics Engineers, Inc.
Provided by IHS under license with IEEE
No reproduction or networking permitted without license from IHS Not for Resale

b) Between line terminals and load terminals of the main contacts

2) With circuit breaker in the closed position, apply specified voltage as given in 7.1 to primary circuit
   a) Between live parts and metal parts that are normally grounded
   b) Between terminals of different poles
   c) Between the terminals of the discharge contact
3) When a circuit breaker has secondary control wiring, the test voltage shall be applied between the control circuit terminals and metal parts that are normally grounded. The terminals may be wired together with small bare wire and all intentional circuit grounds shall be disconnected. If the circuit breaker control circuit includes a motor, the motor may be disconnected during the dielectric test on the control circuit and subsequently tested in place.

8.2.3 Continuous Current Test

The continuous current test is made to insure that the field discharge circuit breaker main contacts can carry 100 percent of their rated continuous current within a test enclosure without exceeding the allowable temperature limits specified in Table 2.

8.2.3.1 Duration of Test

The continuous-current test shall be performed for such a period of time that the temperature rise of the terminals of the test enclosure has not increased by more than 1.0°C (1.80°F) during each of two successive 30 min intervals as indicated by three successive readings. If the temperature rise at the end of the second interval is equal to the established limits and if the temperature rise has increased since the previous reading, the test shall be continued.

8.2.3.2 Method of Measuring Temperature of the Air Surrounding the Enclosure

The temperature of the air surrounding the enclosure (ambient) shall be determined by one thermometer or thermocouple having a heat sink attached and placed approximately 12 in (304.8 mm) from the side surface of the enclosure and midway between the top and bottom of the enclosure.

8.2.3.3 Method of Measuring Device Temperature

Thermocouples shall be used to measure the temperature at required locations on the circuit breaker.

Thermocouples used for measuring the temperature of insulation shall be located on the current-carrying member or other metal part at a point as close as practical to the accessible junction of the insulation and the current-carrying member or other metal part.

Thermocouples used for measuring the temperature of the test-enclosure terminal connections and other conducting joints shall be located approximately $^1/_2$ in (12.7 mm) from the terminal or other conducting joints on the current-carring member.

Thermocouples may be used to determine the air temperature of the areas where devices are mounted, as a means of establishing the required ambient temperature for separate device testing.

Thermocouples shall be held in intimate contact with the conductor surface by such methods as welding, drilling and peening, or cementing.

8.2.3.4 Performance

Circuit breakers shall be considered as having passed this test if the limits of observable temperature rise specified in Table 2 are not exceeded.

Copyright © 1980 IEEE All Rights Reserved

Copyright The Institute of Electrical and Electronics Engineers, Inc.
Provided by IHS under license with IEEE
No reproduction or networking permitted without license from IHS Not for Resale

8.2.4 Short-Time Current Test

A short-time current test shall be made to demonstrate a circuit breaker's short-time thermal withstand capability. Short-time ratings are assigned in Table 7, ANSI C37.16-1979.

Short-time current tests shall be made with direct current or alternating current at the option of the manufacturer. The equivalent rms value of ac current for $^1/_2$ s period shall be no less than rated short-time current, except at the option of the manufacturer, the ac current may be reduced so that its peak is approximately equal to the rated short-time current and the time extended to produce an equivalent I^2t value.

8.2.4.1 Short-Time Test on Main Contacts

Short-time current tests on the field discharge circuit breaker main contacts shall be made at no less than the rated short-time current for a $^1/_2$ s period of time.

Table 3 —Copper Conductors for Use in Continuous-Current Tests

Circuit Breaker Frame Size (A)	Bus* per Terminal	
	Quantity	Size—In (mm)
225	1—	$^1/_4 \times 1$ (6.35 × 25.0)
600	1—	$^1/_4 \times 2$ (6.35 × 51.0)
1600	2—	$^1/_4 \times 3$ (6.35 × 76.0)
2000	2—	$^1/_4 \times 4$ (6.35 × 102.0)
3000	3—	$^1/_4 \times 5$ (6.35 × 127.0)
4000	4—	$^1/_4 \times 5$ (6.35 × 127.0)
5000	4—	$^1/_4 \times 5$ (6.35 × 127.0)
6000	4—	$^1/_4 \times 6$ (6.35 × 152.0)
8000	4—	$^1/_4 \times 8$ (6.35 × 203.0)
10,000	5—	$^1/_4 \times 8$ or 2– $\frac{5}{16} \times 10$ channel†
12,000	6—	$^1/_4 \times 8$ or 2– $^1/_2 \times 10$ channel†

*Where multiple bus bars are used, they are to be spaced $^1/_4$ in (6.35 mm) apart. Configurations shall be vertical. The conductors connected to the terminals shall be a minimum of 4 ft (1.2 m) long.
†4 $^5/_8$ in legs (turned outward).

8.2.4.2 Short-Time Test on Discharge Contacts

Short-time tests shall be made on the discharge contacts of the field discharge circuit breaker:

1) For a 15 s period of time at a value of current no less than the 15 s short-time current rating, when applicable
2) For a $^1/_2$ s period of time at a value of current no less than the $^1/_2$ s short-time current rating

8.2.4.3 Performance

After the short-time tests the circuit breaker shall be capable of carrying rated continuous current without exceeding the rated temperature rise of the various parts and shall be capable of meeting its short-circuit current interrupting rating.

Copyright © 1980 IEEE All Rights Reserved

Copyright The Institute of Electrical and Electronics Engineers, Inc.
Provided by IHS under license with IEEE
No reproduction or networking permitted without license from IHS Not for Resale

NOTE — It is not the intention of this paragraph to require that short-circuit current interrupting tests be performed after short-time tests in order to demonstrate satisfactory performance and condition of the circuit breaker.

8.2.5 Interrupting Test on Main Contacts

Interrupting tests on a field discharge circuit breaker's main contacts shall be made at the interrupting current rating to determine their ability to operate satisfactorily under short-circuit conditions on either the excitation circuit or machine armature circuit. The tests shall be made with the circuit breaker located in an enclosure of the type in which it is designed to operate.

Interrupting tests may be made either on actual excitation systems or in laboratories having direct-current generators or rectifiers of suitable capacity.

When interrupting tests are made in laboratories, the following conditions apply: resistors are used to vary the magnitude of the current; reactors are used to provide an inductive circuit equivalent to that of the excitation circuit on which the field discharge circuit breaker is to be applied; and other equipment consists of field control for direct voltage, backup circuit breakers to protect the test circuit, and oscillographic equipment for accurately recording currents and voltages.

The test circuit parameters used to determine interrupting performance shall be as follows:

1) The recover voltage, 8 ms after interruption, shall be no less than 95 percent of the direct voltage corresponding to the condition at which interrupting performance is to be established and shall be maintained for no less than 50 ms
2) The magnitude of current for proof of interrupting rating shall be the maximum value (E/R of the test circuit) measured with breaker short circuited or omitted
3) The inductance of the test circuit source for these interrupting tests shall be no less than the values listed below:

Excitation System Continuous Current Rating (A)	Inductance (mH)
600	1.5
1600	0.9
4000–12,000	0.2

4) An indicator consisting of three layers of cheesecloth shall be employed to detect any excessive emission of flame, hot gases, or molten particles during the interrupting test. (The cheesecloth shall be loosely stretched on a frame at least as large as the front of the circuit breaker enclosure and shall be located 1 in (25.4 mm) from, and parallel to, the front door of the circuit breaker enclosure; the cheesecloth may be displaced as necessary to accommodate projections such as handles.)

8.2.5.1 Interrupting Test at Rated Short-Time Voltage

Interrupting tests shall be made on a field discharge circuit breaker at rated short-time voltage to demonstrate the ability of the circuit breaker to successfully interrupt all currents up to its assigned rating. An interrupting duty cycle shall be made at rated interrupting current without making any repairs to the field discharge breaker.

8.2.5.2 Interrupting Test at Rated Maximum Interrupting Voltage

Interrupting tests shall be made on a field discharge circuit breaker at rated maximum interrupting voltage to demonstrate the ability of the circuit breaker to successfully interrupt all currents up to its assigned rating. An

Copyright © 1980 IEEE All Rights Reserved

Copyright The Institute of Electrical and Electronics Engineers, Inc.
Provided by IHS under license with IEEE
No reproduction or networking permitted without license from IHS Not for Resale

interrupting duty cycle shall be made at rated interrupting current without making any repairs to the field discharge circuit breaker.

8.2.5.3 Interrupting Duty Cycle

The interrupting duty cycle of the field discharge circuit breaker shall consist of two successive opening operations separated by the time required for test procedures.

8.2.5.4 Performance

At the end of an interrupting duty cycle at its interrupting rating, the field discharge circuit breaker shall be in the following condition:

Mechanical. The circuit breaker shall be substantially in the same mechanical condition as at the beginning.

Electrical. The circuit breaker shall be capable of withstanding 60 percent of the dielectric test voltage as given in 7.1, and of carrying rated current at rated voltage for a limited time but not necessarily without exceeding rated temperature rise. The emission indicators shall not have ignited. Scorching of the cheesecloth shall not be considered as ignition.

After performing a duty cycle at or near interrupting current rating, it is not to be inferred that the circuit breaker can repeat its interrupting performance without inspection, and if necessary, the making of repairs.

8.2.6 Making-Current Test on Discharge Contacts

A making-current test shall be made to demonstrate the ability of the field discharge circuit breaker discharge contacts to close against rated closing current. This test shall be made on a 60 Hz alternating-current circuit where the discharge contact closes against a peak current equal to no less than its rated closing current. The test must be of sufficient duration to demonstrate that the discharge contact is completely closed. The discharge contacts shall be substantially in the same mechanical condition as before the test. If any contact welding occurs, it shall not prevent opening of these contacts after the test as demonstrated by a subsequent closing operation of the circuit breaker.

8.2.7 Endurance Tests

8.2.7.1 General

All endurance tests shall be performed on the same circuit breaker to determine compliance with specified mechanical and electrical requirements as given in Table 14 of ANSI C37.16-1979. Servicing shall be permitted at the intervals given also in Table 14.

1) Power-operated circuit breakers shall be subjected to all endurance tests.
2) Manually operated circuit breakers, having stored-energy mechanisms, which differ from the power-operated equivalent only in the means of supplying the energy to be stored, shall not be subjected to endurance tests.
3) Manually operated circuit breakers, not essentially the same as the power-operated circuit breaker or not having any power-operated equivalent, shall be subjected to all endurance tests except that the number of mechanical endurance operations performed shall be 50 percent of the number specified in Table 14, ANSI C37.16-1979.

8.2.7.2 Frequency of Operation

The frequency of operation shall be one operation every 2 min. At the option of the manufacturer, the rate may be increased. During each operation, the circuit breaker shall remain closed for no less than $\frac{1}{16}$ s.

Copyright © 1980 IEEE All Rights Reserved

Copyright The Institute of Electrical and Electronics Engineers, Inc.
Provided by IHS under license with IEEE
No reproduction or networking permitted without license from IHS Not for Resale

Due to the large total number of operations required, both electrical and mechanical, endurance tests may be conducted in groups, at the option of the manufacturer. However, at least one group shall consist of no less than 120 operations.

8.2.7.3 Electrical Endurance Test

The electrical endurance test shall be performed with no less than rated continuous current, at no less than rated short-time voltage, with a circuit inductance equal to that in 8.2.5 and at any one of the rated control voltages of Table 23, ANSI C37.16-1979. The discharge contacts shall be subjected to the required number of electrical endurance tests while breaking no less than the rated interrupting current at no less than rated nominal voltage. The main contacts may be used in conjunction with the discharge contact to limit the current duration for this test. The circuit may be essentially noninductive.

8.2.7.4 Mechanical Endurance Test

The mechanical endurance test shall be performed at no load and at any one of the rated control voltages of Table 23, C37.16-1979.

8.2.8 Performance

At the conclusion of these tests, the circuit breaker shall be capable of meeting its continuous current and voltage ratings without repairs or replacement of parts.

8.3 Production Tests

All applicable production tests shall be performed on each circuit breaker at the factory after final assembly.

8.3.1 Schedule of Tests

Production tests shall include the following:

1) Control and secondary wiring check test
2) Dielectric withstand test
3) No-load operation test
4) Discharge contact adjustment

8.3.2 Control, Secondary Wiring and Devices Check, Control Secondary Wiring and Devices

Check to make sure all connections have been made correctly. Devices and relays, if used, shall be checked by actual operation where feasible. Those circuits for which operation is not feasible shall be checked for continuity.

8.3.3 AC Dielectric Withstand Voltage Test

The test shall be conducted in accordance with 8.2.2. The duration of the test may be 1 s if a voltage 20 percent greater than that specified in 7.1 is used.

8.3.4 No-Load Operation Test

8.3.4.1 Power Operated Circuit Breakers

Power-operated circuit breakers shall be given the following no-load operation tests:

1) Five closing and five opening operations at minimum control voltage
2) Five closing, five opening, and five trip-free operations at maximum control voltage

Copyright © 1980 IEEE All Rights Reserved

Copyright The Institute of Electrical and Electronics Engineers, Inc.
Provided by IHS under license with IEEE
No reproduction or networking permitted without license from IHS Not for Resale

3) Two operations to check antipumping, which shall be performed in the following manner:
   a) With the circuit breaker in the closed position, apply uninterrupted control power to the closing circuit, and maintain the closing control switch circuit closed
   b) Trip the circuit breaker; the circuit breaker shall remain open until closing-circuit power has been interrupted and then restored

If other devices, electrical or mechanical, are applicable, they shall be checked for proper functioning. Such devices shall include key interlocks, mechanical interlocks, electrical interlocks, padlocking, racking mechanisms, etc.

8.3.4.2 Manually Operated Circuit Breakers

Manually operated circuit breakers shall be given the following no-load operation tests:

1) Five closing and five opening operations
2) When shunt trip is used, a minimum of five openings using the shunt trip at the minimum control voltage specified for the coil
3) Five trip-free operations

If other devices, electrical or mechanical, are applicable, they shall be checked for proper functioning. Such devices shall include key interlocks, mechanical interlocks, electrical interlocks, padlocking, racking mechanisms, etc.

8.3.5 Discharge Contact Adjustment

The adjustment of the discharge contact is to be checked in accordance with the manufacturer's instructions for the particular design of circuit breaker, to insure that the proper overlap exists between the main and discharge contacts during operation.

9. Application Guide

9.1 General

This guide covers the application of field discharge circuit breakers in the excitation circuits of motors, generators, synchronous condensers, and rotating exciters, and applies to circuit breakers rated in accordance with Section 4.

This standard is intended for specific use in the application of field discharge circuit breakers to excitation systems. Familiarity with associated American National Standards is assumed, and references to these standards are indicated herein as necessary for clarity in describing application limitations.

The general requirements for a field discharge circuit breaker must be analyzed for both normal switching and fault conditions. Circuit breakers should be applied within their voltage, continuous current, short-time, and intertuption capabilities, as defined in this standard, with proper consideration given to the service conditions, stated in Section 3. They should be selected to provide the protection required by the other components of the circuit. For other applications not covered by this standard, the manufacturer should be consulted.

Field discharge circuit breakers which do not meet all of the requirements of voltage or current as listed in ANSI C37.16-1979, or which exceed in some characteristics the requirements listed in these standards, may be applied within the capability of the circuit breaker, provided that those specific items which deviate from the values listed are established by the method's contained herein.

Copyright © 1980 IEEE All Rights Reserved

Copyright The Institute of Electrical and Electronics Engineers, Inc.
Provided by IHS under license with IEEE
No reproduction or networking permitted without license from IHS Not for Resale

9.2 Functions Performed by a Field Discharge Circuit Breaker

Some of the basic functions performed by a field discharge circuit breaker are:

1) Normal application and removal of excitation by either manual or automatic means; the field discharge circuit breaker may operate in the main field of an alternating-current machine or in a field of a rotating exciter
2) Provide protection to the machine and excitation system by connecting a discharge resistor across the field winding of the machine prior to removal of the source of excitation
3) Provide a means for transfer of excitation source

Field discharge circuit breakers may apply and remove excitation to the main field of alternating-current or direct-current generators, synchronous motors, or synchronous condensers. When so used, the circuit breaker is designated as a main field discharge circuit breaker. A typical application is illustrated in Fig 3. Alternating-current generators, alternating-current motors, and synchronous condensers must have excitation supplied from a direct-current source. If this source is a rotating exciter, a field discharge circuit breaker may be used in the exciter field circuit. This application is illustrated in Fig 4 and the circuit breaker is designated as an exciter field discharge circuit breaker.

A discharge resistor must be used with the field discharge circuit breaker to limit induced voltages when the circuit breaker is opened while current is flowing in the field circuit. When the field circuit breaker is opened, the discharge contacts of the field circuit breaker short circuit of the field through the discharge resistor at the instant preceding the opening of the field discharge circuit breaker main contacts. Thus, the energy stored in the magnetic field is dissipated by the field current flowing through the field windings and discharge resistor.

The field discharge resistor is an important factor in limiting the interrupting duty on the field discharge circuit breaker and in limiting the voltage stress on the insulation of the excitation system, including the machine field. It is necessary to coordinate the field discharge resistor with the field discharge circuit breaker and with the insulation withstand voltage of the components in the machine field circuit.

It is an occasional practice with synchronous alternating-current machines to transfer excitation sources, particularly with the machine in operation. Main field discharge circuit breakers permit this transfer to be accomplished easily and safely, as illustrated in Fig 3.

Copyright © 1980 IEEE All Rights Reserved

Copyright The Institute of Electrical and Electronics Engineers, Inc.
Provided by IHS under license with IEEE
No reproduction or networking permitted without license from IHS
Not for Resale

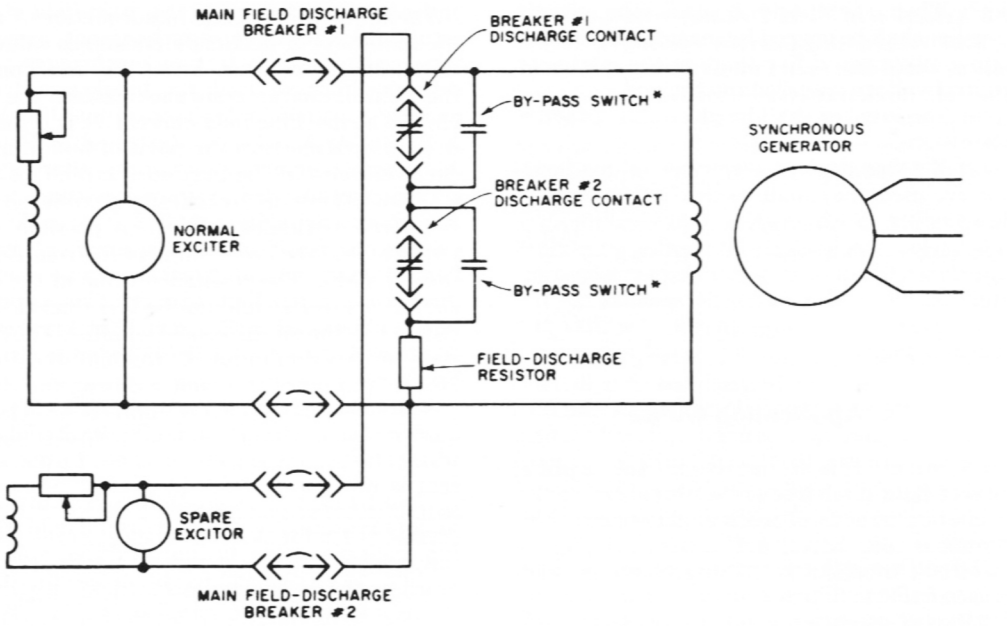

*By-pass switch used to complete circuit for drawout breakers when breaker is removed from operating position.

Figure 3 —Typical Excitation System for a Synchronous Machine with Main Field Discharge Circuit Breakers and Alternate Excitation Source

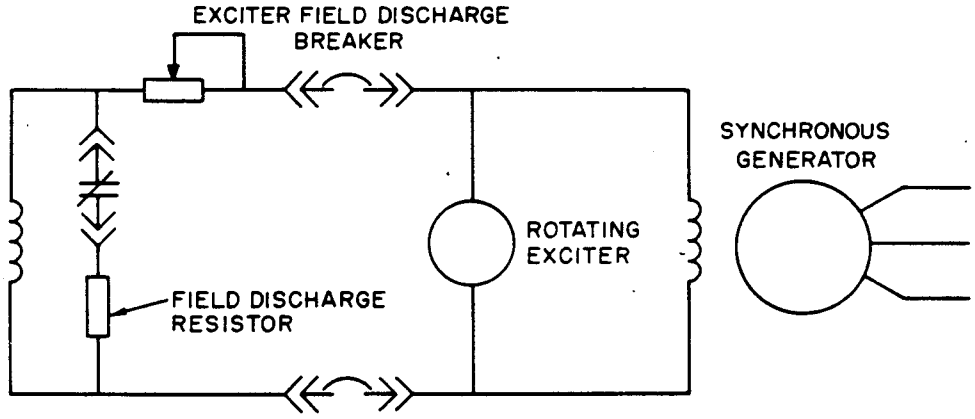

Figure 4 —Typical Excitation System for Synchronous Machine with Exciter Field Discharge Circuit Breaker

Series overcurrent tripping devices are generally omitted from field circuit breakers since they could cause undesirable tripping of the circuit breaker from transient overcurrents in the field circuit due to disturbances on the alternating-current system of the machine. Other forms of relaying protect the exciter and machine field from serious faults in the excitation system circuit.

Copyright © 1980 IEEE All Rights Reserved

Copyright The Institute of Electrical and Electronics Engineers, Inc.
Provided by IHS under license with IEEE
No reproduction or networking permitted without license from IHS
Not for Resale

9.3 Selection of Field Discharge Resistor

9.3.1 Alternating-Current Machines

Based on the rated maximum interrupting voltage of the field discharge circuit breaker with clearing time of 0.1 s:

$$R_d = \frac{\text{Rated Maximum Interrupting Voltage} - E}{K_{dc} I_f} \text{ [5]} \quad (1)$$

Based on the maximum permissible insulation stress of excitation circuit including the machine field:

$$R_d = \frac{\text{Maximum Permissible Insulation Stress}}{K_c I_f} \text{ [6]} \quad (2)$$

where

R_d = value of the discharge resistor in ohms
I_f = field current at machine rating or capability (for machines cooled by hydrogen or other coolant under pressure, the rating or capability is at the maximum pressure)
E = excitation source voltage at time of interruption
K_{dc} = ratio of the direct-current component of the machine field current to I_f, at 0.1 s after the inception of a fault in the armature circuit (see Table 5 for probable maximum values)
K_c = ratio of the crest value of machine field current to I_f, at 0.1 s after the inception of a fault in the armature circuit (see Table 5 for probable maximum values due to a 3-phase fault in the machine armature circuit)

The lower value of R_d from Eqs 1 and 2 establishes the maximum resistance value of the discharge resistor. Since the insertion of the field discharge resistance hastens the decay of the machine field current, it is a factor in limiting damage at the point of fault during short circuits in the armature circuit of the machine. Therefore, it is desirable to select the discharge resistance as large as possible, but not to exceed the lower value of R_d from Eqs 1 and 2. The resistance value of the discharge resistor should not be less than the resistance of the machine field winding. The purpose of this limitation is to limit the high-current output of the exciter during the short period when the discharge contacts are closed and the main contacts are still closed, but in the process of opening.

9.3.1.1 Synchronous Motors

Synchronous motors require a resistor across the field winding during starting to limit induced voltages in the field circuit and to obtain specific starting and pull-in torque characteristics. The resistor is usually selected by the motor designer and generally ranges from 5 to 20 times the resistance of the motor field winding. The starting resistor may also be used as a discharge resistor. If a field discharge circuit breaker is used in the motor field, the resistance value of the discharge resistor should not exceed the lower value of R_d calculated from Eqs 1 and 2.

9.3.2 Direct-Current Machines (Exciters)

Equations 1 and 2 are also applicable in the selection of a discharge resistor if the field discharge circuit breaker acts in the main field of an exciter. Since pulsating currents induced in the exciter field are of a minor nature, K_c may be assumed equal to K_{dc}. See Table 5.

A third equation should be also checked for the possibility of opening the field discharge circuit breaker when the exciter is at ceiling voltage:

$$R_d = \frac{(\text{Rated Maximum Interrupting Voltage of Field Discharge Breaker}) - (\text{Exciter Ceiling Voltage})}{I_f \text{ at Exciter Ceiling Voltage}} \text{ [7]} \quad (3)$$

[5] See Table 7 of ANSI C37.16-1979
[6] See Table 4.
[7] See Table 7 of ANSI C37.16-1979.

Copyright © 1980 IEEE All Rights Reserved

Copyright The Institute of Electrical and Electronics Engineers, Inc.
Provided by IHS under license with IEEE
No reproduction or networking permitted without license from IHS Not for Resale

If R_d obtained is less than obtained from Eqs 1 and 2, it establishes the maximum value of R_d.

9.4 Selection of Field Discharge Circuit Breaker

The field discharge circuit breaker duty under both normal and fault conditions must be considered in the selection of the circuit breaker. The following subsections outline the application factors and briefly discuss each of the rating factors that should be considered in the selection of a field discharge circuit breaker.

9.4.1 Rated Nominal Voltage Class

The rated nominal voltage class of the field discharge circuit breaker should equal or exceed the machine rated field circuit voltage unless the manufacturer or the circuit breaker has assigned a continuous applied voltage capability to the circuit breaker greater than the rated nominal voltage class. In this latter case, the application of the circuit breaker should be within the limits of the circuit breaker capability as noted in 9.1.

9.4.2 Rated Short-Time Voltage

Rated short-time voltage must be considered with respect to the excitation source ceiling voltage. The ceiling voltage of modern high-performance excitation systems may be from 120 percent to over 200 percent of the excitation source rated voltage. The ceiling voltage and the associated current generally exist for only a few seconds; however, under unusual conditions, this time may be up to several minutes. The excitation source voltage may be provided by a rotating or static exciter and may use rectifiers for converting an alternating current supply. The rated and ceiling voltages are defined at machine rated speed. The rated short-time voltage of the field discharge circuit breaker should be no less than the excitation source ceiling voltage whenever the circuit breaker is required to open.

Table 4 —Recommended Permissible Transient Crest Voltages Based on Machine Field Circuit Insulation (for Use in Selection of Field Discharge Resistors)

Nominal Field Circuit Voltage	Standard Manufacturing Machine Field 60 Hz Dielectric Test (volts rms)*	Recommended Permissible Transient Crest Voltage†
250	2500	1770
375	3750	2650
500	5000	3530
750	5500	3890
1000	6000	4240

*Based on ANSI C50.13-1977, Requirements for Cylindrical Rotor Synchronous Generators (IEC 34-1).
†These values should not be construed as a basis for dielectric testing of field wiring.

NOTE — While the circuit breaker is closed, the excitation source ceiling voltage may reach values exceeding those levels which the circuit breaker is capable of clearing. However, the circuit breaker is not required to open under these conditions.

9.4.3 Rated Maximum Interrupting Voltage

Opening the field discharge circuit breaker immediately following a fault in the armature circuit of a machine can result in high circuit recovery voltages due to the relatively high voltage drop across the discharge resistor.

In the calculation of the discharge resistor R_d, in 9.3, the rated maximum interrupting voltage is selected as one of the limiting parameters. The maximum permissible insulation stress of the excitation circuit and machine field is the other limiting parameter.

Copyright © 1980 IEEE All Rights Reserved

Copyright The Institute of Electrical and Electronics Engineers, Inc.
Provided by IHS under license with IEEE
No reproduction or networking permitted without license from IHS Not for Resale

If the permissible insulation stress, (see Eq 2), determines the value of R_d, the rated maximum interrupting voltage of the field discharge circuit breaker will not be reached. The direct-current recovery voltage is the voltage that appears across the open contacts of the circuit breaker at the instant following the interruption of the current by the contacts as given by Eq 4:

$$\text{Direct-Current Recovery Voltage} = (K_{dc})(I_f)(R_d) + E \quad (4)$$

Each of the parameters is as defined for Eqs 1 and 2.

The rated maximum interrupting voltage of the field discharge circuit breaker should be no less than the direct-current recovery voltage.

Table 5 —Probable Maximum Ratios of Transient Field Currents of Synchronous Machines and Direct-Current Exciters

Type Machine	K_c* Maximum Ratio of Crest Value of Total Current to Field Current at Machine Rating or Capability†	K_{dc}* Maximum Ratio of Direct-Current Component of Total Current to Field Current at Machine Rating or Capability
Conventional two-pole air-cooled and hydrogen-cooled turbine-generators	5.5	4
Conductor-cooled turbine-generators	3 to 4‡	2.3 to 3
Four-pole turbine and salient-pole generators	3.5	3
Direct-current exciters for synchronous machines	2	2

*For a specific machine, the appropriate values of K_{dc} and K_c may be determined as follows:

$$K_{dc} = \left(\frac{X_d}{X'_d}\right)\left(\frac{I_{fag}}{I_f}\right)$$

where
X_d = synchronous reactance (unsaturated)
X'_d = transient reactance
I_f = maximum continuous field current
I_{fag} = air gap field current at rated voltage, no load

The value of K_c can be approximated by using the calculated value of K_{dc} and increasing it by the same percentage as shown in Table 5 for the type of machine under consideration.

†Measured at 0.1 s after the inception of a fault in the alternating-current circuit of the synchronous machine.

‡Range to show variations for machines made by different manufacturers.

The direct-current recovery voltage may be reduced by decreasing the discharge resistor to a value less than calculated by Eqs 1 and 2. However, the value of resistance should not be less than the value of resistance of the field winding of the machine.

9.4.4 Rated Continuous Current

The rated continuous current of the field discharge circuit breaker should be greater than the field current at the machine capability. For machines cooled by hydrogen or liquid, the capability is at the maximum pressures. The rated continuous current of the field discharge circuit breaker should be approximately 10 percent greater than the calculated field current at the machine capability.

Copyright © 1980 IEEE All Rights Reserved

Copyright The Institute of Electrical and Electronics Engineers, Inc.
Provided by IHS under license with IEEE
No reproduction or networking permitted without license from IHS Not for Resale

9.4.5 Short-Time Current Ratings

9.4.5.1 Main Contacts, Rated Short-Time Current

To establish the short-time current duty on the main contacts, the peak value of currents illustrated in Fig 1 should be considered. The ratio of K_c to K_{dc} in Table 5 represents the ratio between peak or crest value of current and the direct-current component of the current.

If the ratios of K_{dc} and K_c change materially from those listed in Table 5, then the calculations should be made for the actual rated short-time current duty.

The short-time current rating of the main contact of the field discharge circuit breaker should be no less than the short-time duty requirements as determined above.

9.4.5.2 Discharge Contacts, Short-Time Current Ratings

The duty on discharge contacts is generally one of high currents and low voltages. When used with alternating-current generators, the discharge contacts carry the high induced currents associated with faults in the generator armature. When used in the field of a synchronous motor, the starting procedure calls for the main contacts of the field discharge circuit breaker to be open, and the discharge contacts to be closed. The high motor starting current may exist up to 15 s. If this time is exceeded, the manufacturer should be consulted.

9.4.5.2.1 Discharge Contacts, Rated 15 s Short-Time Current

The duty is associated with synchronous motor starting. It is not likely that circuit breakers rated greater than 1600 A continuous current will be used for synchronous motor starting. Therefore, Table 7 of ANSI C37.16-1979 does not contain any 15 s ratings for the larger breakers. The 15 s short-time current rating of the discharge contacts should be no less than the short-time duty required by the application.

9.4.5.2.2 Discharge Contacts, Rated $^1/_2$ s Short-Time Current

The $^1/_2$ s short-time current rating of the discharge contact should be selected to be no less than the $^1/_2$ s short-time duty requirements of the application.

Fig 1 illustrates the maximum current that is carried by discharge contacts. At the time of current transfer from the excitation source to the field discharge resistor, 0.1 s in the illustration, the field discharge contacts must begin carrying a current equal to K_{dc} times I_f. The $^1/_2$ s short-time current rating of the discharge contacts must be high enough to accept the thermal burden associated with the decaying field current carried through the field discharge resistor. With a suitable field discharge resistor, the rate of decay of the field current will be such that the level of field current $^1/_2$ s after closing of the circuit breaker discharge contacts, will generally be less than $^1/_3$ the K_{dc} times I_f value.

9.4.6 Interrupting Current Ratings

9.4.6.1 Rated Interrupting Current at Rated Short-Time Voltage

The rated interrupting current at rated short-time voltage is the duty requirement arising from a fault in the machine field circuit.

In a coordinated unit excitation system, the excitation source ratings are matched to the machine excitation requirements and the maximum short-circuit current will seldom exceed 10 times the source rated current.

The rated interrupting current at rated short-time voltage should be no less than the maximum short-circuit current from the excitation source while operating at ceiling voltage.

--`,,`-`-`,,`,,`,`,,`---
Copyright © 1980 IEEE All Rights Reserved

Copyright The Institute of Electrical and Electronics Engineers, Inc.
Provided by IHS under license with IEEE
No reproduction or networking permitted without license from IHS
Not for Resale

When the inductance of the excitation system on the source side of the field discharge circuit breaker exceeds the following, special consideration must be given, and the manufacturer should be consulted:

Excitation System Continuous Current Rating (A)	Inductance (mH)
600	1.5
1600	0.9
4000–12 000	0.2

Table 6 —Rating Correction Factors

Altitude*		Rating Correction Factor	
Meters	Feet	Continuous Current	Voltage
2000	6 600 (and below)	1.00	1.00
2600	8 500	0.99	0.95
3900	13 000	0.96	0.80

*Values for intermediate altitudes may be derived by linear interpolation.

9.4.6.2 Rated Interrupting Current at Maximum Interrupting Voltage

Faults in the armature circuit of an alternating current machine can cause high induced transient field currents. Fig 1 illustrates a typical oscillogram of field current of a generator during a 3-phase short-circuit at the armature terminals. The interrupting current duty on the main contact is the sum of the direct-current component of total field current, including the induced current, at the instant of contact parting plus the current taken by the discharge resistor when the discharge contact closes before the main contacts part:

$$\text{Interrupting Current Duty} = K_{\text{dc}}(I_f) + E/R_d \tag{5}$$

The definition of terms in Eq 5 are the same as Eqs 1 and 2.

The rated interrupting current of the field discharge circuit breaker main contacts at rated maximum interrupting voltage should be no less than the interrupting current duty from Eq 5.

9.4.6.3 Rated Interrupting Current of Discharge Contacts

It is possible that the field discharge contacts may be required to interrupt rated continuous current with rated nominal voltage applied for both alternating-current motors and generators. For motors, this can occur when excitation is applied during the starting cycle. For generators, this can occur if the field discharge circuit breaker is first inadvertently tripped with rated nominal voltage output of the excitation source, then immediately reclosed.

The rated interrupting current of the discharge contacts should be no less than the continuous-current requirement of the excitation system.

Copyright © 1980 IEEE All Rights Reserved

Copyright The Institute of Electrical and Electronics Engineers, Inc.
Provided by IHS under license with IEEE
No reproduction or networking permitted without license from IHS Not for Resale

9.4.7 Rated Making Current of the Discharge Contacts

The discharge contacts are required to close at the time rated short-time current is being carried by the main contacts.

The value of the current (peak) which the discharge contacts will be required to close is determined in accordance with 9.4.5.1. The rated making current of the discharge contact should be no less than this value.

9.4.8 Service Conditions Affecting Field Discharge Circuit Breaker Applications

9.4.8.1 Altitude Correction

Circuit breakers, when applied at altitudes greater than 2000 m, should have their various voltages and current ratings, as specified in Table 7 of ANSI C37.16-1979, multiplied by the correction factors shown in Table 6 to obtain values at which the application is made. The short-time and short-circuit current ratings are not affected by altitude.

9.4.8.2 Other Service Conditions

Certain service conditions may require unusual construction or operation, and these should be brought to the attention of those responsible for the application, manufacture, and operation of the circuit breaker. Wherever possible, steps such as inclusion of heaters, placement in controlled atmosphere areas, or others, should be taken at the site of the installation to nullify the deleterious effect of the following:

1) Exposure to damaging fumes or vapors, excessive or abrasive dust, explosive mixture of dust or gases, steam, salt spray, excessive moisture, dripping water, and other similar conditions
2) Exposure to abnormal vibration, shocks, or tilting
3) Exposure to excessively high or low temperature
4) Exposure to unusual transportation or storage conditions
5) Exposure to extreme solar temperatures
6) Unusual operating duty, frequency of operation, and difficulty of maintenance

10. Revision of American National Standards Referred to in this Standard

When the following American National Standards referred to in this standard are superseded by a revision approved by the American National Standards Institute, Inc, the revision shall apply.

ANSI C37.16-1979, Preferred Ratings, Related Requirements, and Application Recommendations for Low-Voltage Power Circuit Breakers and AC Power Circuit Protectors.

ANSI C37.100-1972, Definitions for Power Switchgear.

ANSI C50.10-1975, General Requirements for Synchronous Machines.

ANSI/IEEE C37.20-1969, Switchgear Assemblies Including Metal-Enclosed Bus.

IEEE Std 4-1978, Standard Techniques for High-Voltage Testing.

Copyright © 1980 IEEE All Rights Reserved

Copyright The Institute of Electrical and Electronics Engineers, Inc.
Provided by IHS under license with IEEE
No reproduction or networking permitted without license from IHS
Not for Resale