# American National Standard for Switchgear—

# Unit Substations—Requirements

Approved 06/5/89

**American National Standards Institute, Inc.**

---

The Institute of Electrical and Electronics Engineers, Inc.
3 Park Avenue, New York, NY 10016-5997, USA

Copyright © 2003 by the Institute of Electrical and Electronics Engineers, Inc.
All rights reserved. Printed in the United States of America.

*Print:* ISBN 0-7381-3618-2 SH95105
*PDF:* ISBN 0-7381-3619-0 SS95105

*No part of this publication may be reproduced in any form, in an electronic retrieval system or otherwise, without the prior written permission of the publisher.*

Copyright The Institute of Electrical and Electronics Engineers, Inc.
Provided by IHS under license with IEEE
No reproduction or networking permitted without license from IHS Not for Resale

**American National Standard**

Approval of an American National Standard requires verification by ANSI that the requirements for due process, consensus, and other criteria for approval have been met by the standards developer.

Consensus is established when, in the judgment of the ANSI Board of Standards Review, substantial agreement has been reached by directly and materially affected interests. Substantial agreement means much more than a simple majority, but not necessarily unanimity. Consensus requires that all views and objections be considered, and that a concerted effort be made toward their resolution.

The use of American National Standards is completely voluntary; their existence does not in any respect preclude anyone, whether he has approved the standards or not, from manufacturing, marketing, purchasing, or using products, processes, or procedures not conforming to the standards.

The American National Standards Institute does not develop standards and will in no circumstances give an interpretation of any American National Standard. Moreover, no person shall have the right or authority to issue an interpretation of an American National Standard in the name of the American National Standards Institute. Requests for interpretations should be addressed to the secretariat or sponsor whose name appears on the title page of this standard.

**CAUTION —** NOTICE: This American National Standard may be revised or withdrawn at any time. The procedures of the American National Standards Institute require that action be taken periodically to reaffirm, revise, or withdraw this standard. Purchasers of American National Standards may receive current information on all standards by calling or writing the American National Standards Institute.



Copyright The Institute of Electrical and Electronics Engineers, Inc.
Provided by IHS under license with IEEE
No reproduction or networking permitted without license from IHS
Not for Resale

## Foreword

(This Foreword is not part of American National Standard C37.121-1989.)

This new standard has been developed to outline the requirements for unit substations, utilizing other documents such as NEMA 201 covering primary substations, NEMA 210 covering secondary unit substations, and a draft document on articulated unit substations compiled by a working group of the disbanded High Voltage Apparatus Coordinating Committee (HVACC).

This standard was developed by a working group sponsored by the Power Switchgear Assemblies Technical Committee of the Switchgear Section (8SG) of the National Electrical Manufacturers Association (NEMA/SG/5). During the course of the preparation of this standard, coordination was maintained with the Transformer Section (8TR) of the National Electrical Manufacturers Association.

Suggestions for improvements gained in the use of this standard will be welcome. They should be sent to National Electrical Manufacturers Association, 2101 L Street, NW, Washington, DC 20037.

This standard was processed and approved for submittal to ANSI by Accredited Standards Committee on Power Switchgear, C37. Committee approval of the standard does not necessarily imply that all committee members voted for its approval. At the time it approved this standard, the C37 Committee had the following members:

**W. E. Laubach** *(Chair)*
**A. K. McCabe** *(Executive Vice-Chairman, HV Standards)*
**S. H. Telander** *(Executive Vice-Chairman, LV Standards)*
**D. L. Swindler** *(Executive Vice-Chairman, IEC Activities)*
**C. H. White** *(Secretary)*
**M. B. Williams** *(Program Administrator)*

| *Organizations Represented* | *Name of Representative* |
|---|---|
| Association of Iron and Steel Engineers | J. M. Tillman |
| Electric Light and Power Group | R. L. Capra (Chairman) |
| | D. A. Ditzler |
| | K. D. Hendrix |
| | D. T. Weston |
| | G. R. Brandenberger (Alt) |
| | T. E. Bruck (Alt) |
| | J. H. Provanzana (Alt) |
| | D. E. Soffrin (Alt) |
| Institute of Electrical and Electronics Engineers | H. W Mikulecky (Chairman) |
| | W. F. Hoenigmann |
| | D. M. Larson |
| | E. W. Schmunk |
| | C. A. Schwalbe |
| | S. C. Atkinson (Alt) |
| | D. G. Kumbera (Alt) |



Copyright The Institute of Electrical and Electronics Engineers, Inc.
Provided by IHS under license with IEEE
No reproduction or networking permitted without license from IHS
Not for Resale

| | |
|---|---|
| National Electrical Manufacturers Association | R. A. McMaster (Chairman) |
| | T. C. Burtnett |
| | R. H. Miller |
| | R. O. D. Whitt |
| | H.L. Miller (Alt) |
| Testing Laboratory Group | L. Frier |
| | W. T. O'Grady |
| | R. W. Seelbach (Alt) |
| Tennessee Valley Authority | R. B. Rotton |
| U.S. Department of Agriculture - Rural Electrification Administration | H. L. Bowles |
| U.S. Department of the Army - Office of the Chief of Engineers | W. M. Jones |
| U.S. Department of the Interior - Bureau of Reclamation | J. W. Reif |
| U.S. Department of the Navy - Naval Construction Battalion Center | R. L. Clark |
| Western Area Power Administration | G. D. Birney |

The former HVACC working group that produced the document covering articulated unit substations, one of this standard's principal sources, had the following members:

**J. W. McMillen**, *Chair*

J. B. Bailey
M. V. Boyle
C. D. Derbyshire
J. C. Dutton
R. F. Fleissner
L. Frier
W. M. Mazer
L. B. McClung
S. E. McDowell
G. E. Uitto
L. E. Williams
H. A. Winkler
J. I. Ykema

The Power Switchgear Assemblies Technical Committee of the NEMA Switchgear Section that developed this standard had the following members:

**S. Telander** *(Chair)*
**C. H. White** *(Secretary)*
**M. B. Williams** *(Program Administrator)*
**W. Laubach** *(Working Group Chairman)*

P. Clickner
H. Keating
H. Miller
S. Roberts
G. Stakats
D. Swindler
C. Welter



Copyright The Institute of Electrical and Electronics Engineers, Inc.
Provided by IHS under license with IEEE
No reproduction or networking permitted without license from IHS
Not for Resale

CLAUSE PAGE


1. Scope ..... 1

1.1 ..... 1
1.2 ..... 1
1.3 ..... 1
1.4 ..... 2

2. Referenced and Related Standards ..... 2

2.1 Referenced American National Standards ..... 2
2.2 Other Referenced Standards ..... 4
2.3 Related Standards ..... 4

3. Definitions ..... 5

4. Service Conditions ..... 6

4.1 General ..... 6
4.2 Usual Service Conditions ..... 6
4.3 Unusual Service Conditions ..... 7

5. Transformer Section ..... 7

5.1 Primary Unit Substation Transformers ..... 7
5.2 Secondary Unit Substation Transformers ..... 8

6. Incoming Section ..... 8

6.1 High-Voltage (or Primary) Bushings on the Transformer Cover ..... 8
6.2 Terminal Chamber ..... 8
6.3 Metal-Clad Switchgear ..... 8
6.4 Metal-Enclosed Interrupter Switchgear ..... 8
6.5 Cutout, Fuse, or Fuse Link ..... 9

7. Outgoing Section ..... 9

7.1 Metal-Clad Switchgear ..... 9
7.2 Metal-Enclosed Interrupter Switchgear ..... 9
7.3 Metal-Enclosed, Low-Voltage, Power-Circuit-Breaker Switchgear ..... 9
7.4 Molded-Case, Circuit-Breaker, Dead-Front Switchboards ..... 9
7.5 Motor Control Centers ..... 9

8. Ratings ..... 9

8.1 Rated Frequency ..... 9
8.2 Rated kVA ..... 9
8.3 Rated High Voltage (or Primary Voltage) and Rated Low Voltage (or Secondary Voltage) ..... 10
8.4 Rated Continuous Current ..... 10
8.5 Rated Short-Circuit Current (Carrying) ..... 10
8.6 Rated Short-Circuit Current Withstand (Momentary) ..... 10
8.7 Rated Low-Frequency, One-Minute Withstand Voltage ..... 11
8.8 Rated Impulse-Withstand Voltage (BIL) ..... 11




Copyright The Institute of Electrical and Electronics Engineers, Inc.
Provided by IHS under license with IEEE
No reproduction or networking permitted without license from IHS Not for Resale

CLAUSE PAGE

9. Construction ..... 11

9.1 Phase and Polarity Arrangements ..... 11
9.2 Phase Sequence ..... 12
9.3 Metal Barriers ..... 12
9.4 Interlocks ..... 12
9.5 Grounding ..... 12
9.6 Nameplates ..... 12
9.7 Drawings–Diagrams–Instructions ..... 12
9.8 Coordination ..... 13

10. Typical Arrangements ..... 13

10.1 ..... 14
10.2 ..... 14
10.3 ..... 14

11. Guide for Selection, Application, Installation, and Maintenance of Unit Substations ..... 14

11.1 Application Considerations ..... 14
11.2 Unusual Service Conditions ..... 14
11.3 System Conditions ..... 15
11.4 Location — Transformer Selection ..... 15
11.5 Load Requirements ..... 16
11.6 Miscellaneous Design Considerations ..... 17
11.7 Installation, Field-Testing, Operation, and Maintenance ..... 19



Copyright The Institute of Electrical and Electronics Engineers, Inc.
Provided by IHS under license with IEEE
No reproduction or networking permitted without license from IHS
Not for Resale

# American National Standard for Switchgear—

# Unit Substations—Requirements

## 1. Scope

### 1.1

This standard covers the requirements for three-phase unit substations for step-down operation in the range of 112.5 kVA through 10 000 kVA at primary voltages of 601 volts through 38 kilovolts.

### 1.2

The standard is intended for use as the basis for the coordination of equipment by assisting in the selection of components. A variety of designs for unit substations are possible using various combinations of incoming sections, transformer sections, outgoing sections, and transition (throat) sections. Since the transformer section determines the kVA and voltage capabilities of a unit substation, the ratings of the various types of unit substations are described in terms of transformer capability.

### 1.3

This standard does not cover the following installations:

1) Substations in which the transformer section includes load-tap-changing equipment
2) Substations in which the transformer section is described and defined as “network,” “subway,” “vault,” or “underground” in American National Standards C57.12.24-1989, C57.12.40-1982, and C57.12.57-1987[1]
3) Substations in which the transformer section is described and defined as “pad-mounted” in American National Standards C57.12.22-1989, C57.12.26-1987, and C57.12.27[1]
4) Substations with gas-insulated equipment, such as substations insulated with $SF_6$, described in ANSI/IEEE C37.122-1989[1]

[1]The complete titles of these related standards are given in 2.3.

Copyright © 2003 IEEE All Rights Reserved


Copyright The Institute of Electrical and Electronics Engineers, Inc.
Provided by IHS under license with IEEE
No reproduction or networking permitted without license from IHS
Not for Resale

5) Rectifier-type substations
6) Mobile substations
7) Installations in ships, watercraft, railway rolling stock, aircraft, or automotive vehicles other than mobile homes and recreational vehicles
8) Installations for mines
9) Installations of railways for generation, transformation, transmission, or distribution of power used exclusively for operation of rolling stock, or for installations used exclusively for signaling and railway communication purposes.
10) Installations of communication equipment that is under the exclusive control of communication utilities, located outdoors or in building spaces used exclusively for such installations.
11) Installations under the exclusive control of electric utilities for the purpose of communication, or metering; or for the generation, control, transformation, transmission, and distribution of electric energy located in buildings used exclusively by utilities for such purposes or located outdoors on property owned or leased by the utility or on public highways, streets, roads, etc; or outdoors by established rights on private property.

### 1.4

It is intended that the incoming, outgoing, transformer, and transition sections included in a unit substation shall meet the basic requirements of applicable industry standards for those sections. In addition, these sections shall meet any additional requirements imposed by this standard when they are used as part of a unit substation.

## 2. Referenced and Related Standards

### 2.1 Referenced American National Standards

This standard is intended for use in conjunction with the following American National Standards. When these referenced standards are superseded by a revision approved by the American National Standards Institute, Inc, the revision shall apply.

ANSI C37.55-1989, Switchgear — Metal-Clad Switchgear Assemblies — Conformance Test Procedures

ANSI C57.12.10-1988, Transformers — 230 kVA and below 833/958 through 8333/10,417 kVA, Single-Phase, and 750/862 through 60 000/80 000/100 000 kVA, Three-Phase, without Load-Tap Changing; and 3750/4687 through 60 000/80 000/100 000 kVA with Load-Tap Changing — Safety Requirements

ANSI C57.12.13-1982, Conformance Standard for Liquid-Filled Transformers Used in Unit Substations, Excluding Pad-Mounted Compartmental-Type Transformers

ANSI C57.12.50-1981 (R1989), Ventilated Dry-Type Distribution Transformers, Three-Phase 5—500 kVA

ANSI C57.12.51-1981 (R1989), Ventilated Dry-Type Power Transformers, Three-Phase, 750—5000 kVA

ANSI C57.12.52-1981 (R1989), Sealed Dry-Type Power Transformers, Three-Phase, 750—5000 kVA

ANSI C57.12.70-1978 (R1986), Terminal Markings and Connections for Distribution and Power Transformers

ANSI C84.1-1989, Electric Power Systems and Equipment — Voltage Ratings (60 Hz)

ANSI Y14.15-1966, Y14.15a-1988, and Y14.15b-1988, Electrical and Electronics Diagrams

ANSI/IEEE 4-1978, Standard Techniques for High Voltage Testing


Copyright © 2003 IEEE All Rights Reserved

Copyright The Institute of Electrical and Electronics Engineers, Inc.
Provided by IHS under license with IEEE
No reproduction or networking permitted without license from IHS Not for Resale

ANSI/IEEE 100-1988, Standard Dictionary for Electrical and Electronic Terms

ANSI/IEEE 141-1986, Recommended Practice for Electrical Power Distribution for Industrial Plants

ANSI/IEEE 142-1982, Recommended Practice for Grounding of Industrial and Commercial Power Systems

ANSI/IEEE 241-1983, Recommended Practice for Electric Power Systems in Commercial Buildings

ANSI/IEEE C37.010-1979 (R1989), Application Guide for AC High-Voltage Circuit Breakers Rated on a Symmetrical Current Basis

ANSI/IEEE C37.20.1-1987, Metal-Enclosed Low Voltage Power Circuit Breaker Switchgear

ANSI/IEEE C37.20.2-1987, Metal-Clad and Station-Cubicle Type Switchgear

ANSI/IEEE C37.20.3-1987, Metal-Enclosed Interrupter Switchgear

ANSI/IEEE C37.24-1971 (R1986), Guide for Evaluating the Effect of Solar Radiation on Outdoor Metal-Enclosed Switchgear

ANSI/IEEE C37.40-1981 (R1988), and C37.40a-1988 Service Conditions and Definitions for Distribution Cutouts and Fuse Links, Secondary Fuses, Distribution Enclosed Single-Pole Air Switches, Power Fuses, Fuse Disconnecting Switches and Accessories

ANSI/IEEE C37.90-1978 (R1983), Relays and Relay Systems Associated with Electrical Power Apparatus

ANSI/IEEE C37.91-1985 (R1989) and C37.91b-1985 (R1989), Guide for Protective Relay Applications to Power Transformers

ANSI/IEEE C37.100-1981 (R1989) and C37.100b-1985, Definitions for Power Switchgear

ANSI/IEEE C57.12.00-1987, General Requirements for Liquid-Immersed Distribution, Power, and Regulating Transformers

ANSI/IEEE C57.12.01, General Requirements for Dry-Type Distribution, Power, and Regulating Transformers[2]

ANSI/IEEE C57.12.80-1978 (R1986), Terminology for Power and Distribution Transformers

ANSI/IEEE C57.13-1978 (R1987), Requirements for Instrument Transformers

ANSI/IEEE C57.91-1981, Guide for Loading Mineral Oil-Immersed Overhead and Pad-Mounted Distribution Transformers Rated 500 kVA and Less with 65°C or 55°C Average Winding Rise

ANSI/IEEE C57.92-1981, Guide for Loading Mineral Oil-Immersed Power Transformers Up to and Including 100 MVA with 55°C or 65°C Winding Rise

ANSI/IEEE C57.94-1982, Recommended Practice for Installation, Application, Operation and Maintenance of Dry-Type General-Purpose Power and Distribution Transformers

ANSI C57.96-1989, Guide for Loading Dry-Type Distribution and Power Transformers (Appendix to ANSI C57.12 Standards)

[2]Withdrawn pending approval of a proposed revision. Consult the secretariat for recent information regarding its status.

Copyright © 2003 IEEE All Rights Reserved


Copyright The Institute of Electrical and Electronics Engineers, Inc.
Provided by IHS under license with IEEE
No reproduction or networking permitted without license from IHS Not for Resale

ANSI/IEEE C62.1-1984, Surge Arrestors for Alternating-Current Power Circuits

ANSI/IEEE C62.2-1987, Guide for the Application of Gapped Silicon Carbide Surge Arresters for AC Systems

ANSI/NEMA ICS-2-1983, Standards for Industrial Control Devices, Controllers, and Assemblies

ANSI/NFPA 70-1987, National Electrical Code

ANSI/NFPA 70B-1987, Electrical Equipment Maintenance

## 2.2 Other Referenced Standards

This standard is also intended for use in conjunction with the following standards:

IEEE C57.104-1978, Guide for the Detection and Determination of Generated Gases in Oil-Immersed Transformers and Their Relation to the Serviceability of the Equipment[3]

IEEE C57.106-1977, Guide for Acceptance and Maintenance of Insulating Oil in Equipment

NEMA SG2-1986, High-Voltage Fuses[4]

NEMA SG5-1981, Power Switchgear Assemblies

## 2.3 Related Standards

The following standards are listed for information only, and are not essential for the completion of the requirements of this standard.

ANSI/IEEE C37.122-1989, Gas-Insulated Substations, Standards, Recommended Practices and Guides

ANSI C57.12.22-1989, Requirements for Pad-Mounted, Compartmental-Type, Self-Cooled, Three-Phase Distribution Transformers with High-Voltage, 34 500 GrdY/19 920 Volts and below; 2500 kVA and Smaller

ANSI C57.12.24-1989, Requirements for Underground-Type Three-Phase Distribution Transformers, 2500 kVA and Smaller; High-Voltage 24,940GrdY/14,400 Volts and below; Low-Voltage 480 Volts and below

ANSI C57.12.26-1987, Requirements for Pad-Mounted, Compartmental-Type, Self-Cooled, Three-Phase Distribution Transformers with High-Voltage Bushings; High-Voltage, 34 500 GrdY/19 920 Volts and below; 2500 kVA and Smaller

ANSI C57.12.27-1982, Conformance Requirements for Liquid-Filled Distribution Transformers Used in Pad-Mounted Installations, Including Unit Substations

ANSI C57.12.40-1982, Requirements for Secondary Network Transformers, Subway and Vault Types (Liquid Immersed)

ANSI C57.12.57-1989, Transformers — Ventilated Dry-Type Network Transformers 2500 kVA and Below, Three-Phase, with High-Voltage 34 500 Volts and below, Low-Voltage 216Y/125 and 480Y/277 Volts — Requirements

[3]Available from IEEE Service Center, Publications Sales, 445 Hoes Lane, Piscataway, NJ 08855-1331
[4]Available from National Electrical Manufacturers Association, 2101 L Street, NW, Washington, DC 20037


Copyright © 2003 IEEE All Rights Reserved

Copyright The Institute of Electrical and Electronics Engineers, Inc.
Provided by IHS under license with IEEE
No reproduction or networking permitted without license from IHS Not for Resale

## 3. Definitions

The definitions of terms contained in this standard or in other standards referenced in this standard are not intended to embrace all legitimate meanings of the terms, but are applicable only to the subject treated in this standard. For definitions not given in this section, refer to ANSI/IEEE C37.100-1981 and C37.100b-1985, ANSI/IEEE C57.12.80-1978, and ANSI/IEEE 100-1988.

**3.1 Substation:** An assemblage of equipment for purposes other than generation or utilization, through which electric energy in bulk is passed for the purpose of switching or modifying its characteristics (definition excerpted from ANSI/IEEE 100-1988).

**3.2 Unit Substation:** A substation consisting primarily of one or more transformers that are mechanically and electrically connected to, and coordinated in design with, incoming and outgoing equipment.

NOTE — For this standard, the term "unit substation" shall be limited to mean "articulated unit substation" only.

**3.3 Transformer Section:** A three-phase power transformer used for step-down operation, that includes necessary mechanical and electrical connecting parts for coordination in a unit substation. Types of transformer sections are described in Section 5.

**3.4 Incoming Section:** Equipment that includes necessary mechanical and electrical connecting parts for coordination in a unit substation on the high-voltage (or primary) side of a transformer section. Types of incoming sections are described in Section 6.

**3.5 Outgoing Section:** Equipment that includes necessary mechanical and electrical connecting parts for coordination into a unit substation on the low-voltage (or secondary) side of a transformer section. Types of outgoing sections are described in Section 7.

**3.6 Transition (Throat) Section:** A mechanical, electrical, and coordinated connection between a transformer section and an incoming section, or betweena transformer section and an outgoing section, or between different types of incoming sections, or between different types of outgoing sections. A transition (throat) section may be (1) integral parts of two adjacent sections, or (2) an integral part of one section, or (3) a separate section.

**3.7 Primary Unit Substation:** A unit substation in which the low-voltage section is rated above 1000 volts.

**3.8 Secondary Unit Substation:** A unit substation in which the low-voltage section is rated 1000 volts and below.

**3.9 Articulated Unit Substation:** A unit substation that is designed, coordinated, and assembled as multiple self-enclosed pieces of equipment intended for connection in the field.

**3.10 Preferred Arrangement:** A unit substation in which the low-voltage section (or secondary) of the transformer is to the right when one faces the control side of the outgoing section, and where the terminal markings of the transformer are "standard" as in the typical arrangement shown in Figure 7(a) and also in the figures illustrating unit substations in ANSI C57.12.70-1978. Other arrangements may be mutually agreed upon between the manufacturer(s) and the user.

**3.11 Reverse Arrangement:** A unit substation in which the low-voltage section (or secondary) of the transformer is to the left when one faces the control side of the outgoing section, and where the terminal markings of the transformer are "reversed" as in the typical arrangement shown in Figure 7(b) and in the figures illustrating unit substations in ANSI C57.12.70-1978.

**3.12 Design Tests:** Tests performed by the manufacturer(s) to determine the adequacy of the design of a particular type, style, or model of any unit of equipment, or its component parts, to meet its assigned ratings and to operate satisfactorily under normal service conditions or under any specified conditions. Such tests may also be used to demonstrate compliance with applicable standards of the industry.

NOTES:

1- Design tests are performed on representative apparatus or prototypes to verify the validity of design analysis and calculation methods, and to substantiate the ratings assigned to all other apparatus of basically similar design. These tests are not intended to be performed on every design or during normal production. The applicable portion of these design tests may also be used

Copyright © 2003 IEEE All Rights Reserved


Copyright The Institute of Electrical and Electronics Engineers, Inc.
Provided by IHS under license with IEEE
No reproduction or networking permitted without license from IHS Not for Resale

to evaluate modifications of a previous design to assure that performance has not been adversely affected. Test data from previous similar designs may be used for current designs when appropriate. Once made, design tests need not be repeated unless the design is so changed as to modify performance.

2- Design tests are sometimes called “type tests.”

**3.13 Production Tests:** Tests performed during production for quality control by the manufacturer(s) on every device, or on representative samples, or on parts or materials, as required to verify that the manufactured product meets the design specifications and applicable standards.

NOTES:

1 — Certain quality assurance tests on identified critical parts of repetitive high-production devices may be performed on a planned statistical sampling basis.

2 — Production tests are sometimes called “routine tests.”

**3.14 Conformance Tests:** Certain performance tests to demonstrate compliance with the applicable standards. The test specimen is normally subjected to all planned routine tests prior to initiation of the conformance test program.

NOTE — The conformance tests may, or may not, be similar to certain design tests. Demonstration of margin (capabilities beyond the standards) is not required.

**3.15 Other Tests:** Tests, so identified in individual product standards, that may be specified by the user in addition to routine tests. (Examples: Impulse; insulation power factor; audible sound)

**3.16 High Voltage:** A general term that pertains to the primary voltage, or primary-voltage side, of a transformer or of a unit substation.

**3.17 Low Voltage:** A general term that pertains to the secondary voltage, or secondary-voltage side, of a transformer or of a unit substation.

**3.18 Enclosure:** A surrounding case or housing used to provide a degree of protection to the enclosed conductors or equipment, and to provide a degree of protection to personnel against incidentally contacting live parts.

**3.19 Barrier:** A partition within the enclosure and part of the contained equipment, used for the insulation or isolation of electric circuits or electric arcs.

## 4. Service Conditions

### 4.1 General

A variety of designs for unit substations are possible using various combinations of incoming sections, transformer sections, and outgoing sections. The design of individual sections of a unit substation must be compatible with the service conditions in which they are applied.

### 4.2 Usual Service Conditions

Unit substations conforming to this standard shall be suitable for operation at their nameplate ratings under the following usual conditions:

1) *Temperature*
   a) The effect of solar radiation is negligible. (The principles stated in ANSI/IEEE C37.24-1971 may be used for guidance.)
   b) The minimum ambient air temperature is –30°C except that, when the transformer is liquid-immersed, the minimum temperature of the liquid’s uppermost layers is –20°C.
   c) The maximum ambient air temperature is +40°C
   d) The average ambient air temperature in any 24-hour period is not more than +30°C.

 Copyright © 2003 IEEE All Rights Reserved

Copyright The Institute of Electrical and Electronics Engineers, Inc.
Provided by IHS under license with IEEE
No reproduction or networking permitted without license from IHS Not for Resale

2) *Altitude.* The maximum altitude is 3300 feet (1000 meters). See ANSI/IEEE C37.20.1-1987, C37.20.2-1987, C37.20.3-1987, and C57.12.00-1987 or C57.12.01-1989 for corrections to dielectric strength and continuous-current rating at altitudes greater than 3300 feet (1000 meters).
3) *Frequency.* Power frequency is 60 Hz.

### 4.3 Unusual Service Conditions

For unit substations that are to be applied under conditions other than those in 4.2, see 11.2 for guidance.

## 5. Transformer Section

Transformer sections shall meet the requirements of this standard and shall comply with the requirements of their applicable standards, including the standard kVA ratings listed in Table 1. Furthermore, the rated high voltage and rated low voltage shall be used in combination with the standard kVA ratings which are listed in Table 2 through Table 5. Primary transformers shall be of the types in 5.1. Secondary transformers shall be of the types in 5.2.

### 5.1 Primary Unit Substation Transformers

#### 5.1.1 Liquid-Immersed without Load-Tap-Changing

These transformers shall meet the following requirements:

1) Voltage and kVA combinations as indicated in Table 2
2) The requirements of ANSI C57.12.10-1988 and ANSI C57.12.13-1982.

#### 5.1.2 Liquid-Immersed with Load-Tap-Changing

These transformers are not covered in this standard.

#### 5.1.3 Ventilated Dry-Type

These transformers shall meet the following requirements:

1) Voltage and kVA combinations as indicated in Table 3
2) The requirements of ANSI C57.12.50-1981 and C57.12.52-1981, and the requirements for solid cast-resin units.[5]

#### 5.1.4 Sealed Dry-Type

These transformers shall meet the following requirements:

1) Voltage and kVA combinations as indicated in Table 4
2) The requirements of ANSI C57.12.50-1981 and C57.12.52-1981

[5]A proposed revision of the withdrawn standard ANSI/IEEE C57.12.01 has been submitted to ANSI and is being considered for approval. This revision would cover, for the first time, solid cast-resin transformer units. Contact the secretariat for recent information regarding the status of this revision.

Copyright © 2003 IEEE All Rights Reserved 

--`,,`-`-`,,`,,`,`,,`---
Copyright The Institute of Electrical and Electronics Engineers, Inc.
Provided by IHS under license with IEEE
No reproduction or networking permitted without license from IHS Not for Resale

### 5.2 Secondary Unit Substation Transformers

#### 5.2.1 Liquid-Immersed without Load-Tap-Changing

These transformers shall meet the following requirements:

1) Voltage and kVA combinations as indicated in Table 5
2) The requirements of ANSI C57.12.13-1982

#### 5.2.2 Ventilated Dry-Type

These transformers shall meet the following requirements:

1) Voltage and kVA combinations as indicated in Table 5
2) The requirements of ANSI C57.12.50-1981 or C57.12.51-1981

#### 5.2.3 Sealed Dry-Type

These transformers shall meet the following requirements:

1) Voltage and kVA combinations as indicated in Table 5
2) The requirements of ANSI C57.12.52-1981

## 6. Incoming Section

Incoming sections shall meet the requirements of this standard and shall comply with the requirements of their applicable specifying standards. Incoming sections include the following components:

### 6.1 High-Voltage (or Primary) Bushings on the Transformer Cover

These bushings shall meet the thermal, mechanical, and dielectric requirements of the applicable transformer standard. A typical example is shown in Figure 1.

### 6.2 Terminal Chamber

This chamber shall meet the thermal, mechanical, and dielectric requirements of the applicable transformer standard. A typical example is shown in Figure 2.

### 6.3 Metal-Clad Switchgear

This switchgear shall meet the requirements of ANSI/IEEE C37.20.2-1987. Typical examples are shown in Figures 3(a), 3(b), 3(c), and 3(d).

### 6.4 Metal-Enclosed Interrupter Switchgear

This switchgear shall meet the requirements of ANSI/IEEE C37.20.3-1987, and NEMA SG 5-1981. Typical examples are shown in Figures 3(a), 3(b), 3(c), 3(d), 4(a), 4(b), 4(c), and 4(d).

 Copyright © 2003 IEEE All Rights Reserved

Copyright The Institute of Electrical and Electronics Engineers, Inc.
Provided by IHS under license with IEEE
No reproduction or networking permitted without license from IHS Not for Resale

### 6.5 Cutout, Fuse, or Fuse Link

This equipment shall meet the applicable service requirements of the components covered in ANSI/IEEE C37.40-1981 and C37.40a-1988, and of NEMA SG 2-1986. Typical examples are shown in Figures 5(a) and 5(b).

## 7. Outgoing Section

Outgoing sections shall meet the requirements of this standard and shall comply with the requirements of their applicable specifying standards. Because of the complexity of outgoing arrangements, it is not practical to present typical examples here. Outgoing sections include the following components:

### 7.1 Metal-Clad Switchgear

This switchgear shall meet the requirements of ANSI/IEEE C37.20.2-1987, ANSI C37.55-1989, and NEMA SG 5-1981.

### 7.2 Metal-Enclosed Interrupter Switchgear

This switchgear shall meet the requirements of ANSI/IEEE C37.20.3-1987 and NEMA SG5-1981.

### 7.3 Metal-Enclosed, Low-Voltage, Power-Circuit-Breaker Switchgear

This switchgear shall meet the requirements of ANSI/IEEE C37.20.1-1987 and NEMA SG 5-1981.

### 7.4 Molded-Case, Circuit-Breaker, Dead-Front Switchboards

These switchboards shall meet the requirements of NEMA PB 2-1984.

### 7.5 Motor Control Centers

These control centers shall meet the requirements of ANSI/NEMA ICS-2-1983.

## 8. Ratings

The rating of each section of a unit substation shall comply with the applicable standards for its components (referenced in Sections 5., 6., and 7.) and shall be equal to or greater than the rating of the unit substation. The kVA, high-voltage, and low-voltage ratings of the transformer section shall be the basis for those ratings of the unit substation. Other sections shall be coordinated with those ratings. The unit substation shall have the following ratings:

### 8.1 Rated Frequency

The rated frequency of a unit substation shall be the frequency of the circuit for which it is designed.

### 8.2 Rated kVA

The rated kVA of a unit substation shall be the rated kVA of the three-phase power transformer in accordance with Tables 1 and 2. The kVA rating of a double-ended unit substation shall be the total kVA of the two transformers.

Copyright © 2003 IEEE All Rights Reserved 

Copyright The Institute of Electrical and Electronics Engineers, Inc.
Provided by IHS under license with IEEE
No reproduction or networking permitted without license from IHS Not for Resale

## 8.3 Rated High Voltage (or Primary Voltage) and Rated Low Voltage (or Secondary Voltage)

In combination with the rated kVA of a unit substation, the rated voltages shall be as follows:

1) For primary unit substations, as indicated in Tables 2, 3, 4.
2) For secondary unit substations, as indicated in Table 5.

## 8.4 Rated Continuous Current

### 8.4.1

The rated continuous current of a unit substation shall be the maximum current in root-mean-square (rms) amperes, at rated frequency, which is intended to be carried continuously by the circuit components, including buses and connections, without raising temperatures above the limits specified in applicable standards.

### 8.4.2

The rated continuous current for high-voltage and low-voltage equipment of a unit substation shall be equal to, or greater than, the respective high-voltage and low-voltage full-load currents of the transformer section.

## 8.5 Rated Short-Circuit Current (Carrying)

### 8.5.1

The rated short-circuit current (carrying) of a unit substation is the rms short-circuit current that is intended to be carried for a specified period of time without causing electrical, thermal, or mechanical damage. The current shall be the rms value determined over the specified period of time.

### 8.5.2

The rated short-circuit current (carrying) rating of a unit substation shall be the rated short-circuit current (carrying) rating of the high-voltage interrupting device. If no high-voltage interrupting device is present, the rated short-circuit current (carrying) rating of the unit substation shall be the let-through short-circuit current of the transformer, in terms of primary amperes.

## 8.6 Rated Short-Circuit Current Withstand (Momentary)

### 8.6.1

The rated short-circuit current withstand of a unit substation is the maximum rms total current that is intended to be carried momentarily without causing electrical, thermal, or mechanical damage or permanent deformation. The current shall be the rms value, including the direct-current component, at the major peak of the maximum cycle, as determined from the envelope of the current wave during the test period.

### 8.6.2

The rated short-circuit current-withstand rating of a unit substation shall be the rated short-circuit current-withstand rating of the high-voltage interrupting device. If no high-voltage interrupting device is present, the rated short-circuit current-withstand rating of the unit substation shall be the let-through current of the transformer, in terms of primary amperes.

 Copyright © 2003 IEEE All Rights Reserved

--`,,`-`-`,,`,,`,`,,`---

Copyright The Institute of Electrical and Electronics Engineers, Inc.
Provided by IHS under license with IEEE
No reproduction or networking permitted without license from IHS Not for Resale

### 8.7 Rated Low-Frequency, One-Minute Withstand Voltage

#### 8.7.1

The rated low-frequency, one-minute withstand voltage of a unit substation is the maximum alternating-current voltage that it is intended to withstand for one minute. The alternating-current voltage shall have a crest value equal to 1.41 times the rms value, shall be as close to a sine wave as practical, and shall have a frequency not less than the rated frequency.

#### 8.7.2

The rated low-frequency, one-minute withstand voltage of the unit substation, on its high-voltage end, shall be the lesser rating of adjacent high-voltage sections.

On its low voltage end, the rated low-frequency one-minute withstand voltage of the unit substation shall be the lesser rating of adjacent low-voltage sections.

### 8.8 Rated Impulse-Withstand Voltage (BIL)

#### 8.8.1

The rated impulse-withstand voltage of a unit substation is the maximum impulse voltage that it can withstand. The impulse voltage shall be a 1.2 $\times$ 50 microsecond full wave with a wave shape as defined in ANSI/IEEE 4-1978.

#### 8.8.2

The rated impulse-withstand voltage of the unit substation on its high-voltage end shall be the lesser rating of adjacent high-voltage sections. The rated impulse-withstand voltage of the unit substation on its low-voltage end shall be the lesser rating of adjacent low-voltage sections. If the unit substation is to operate in an environment that requires a greater impulse-withstand capability, surge arrestors should be used to ensure that the equipment is properly protected at the required impulse level. Impulse levels are not applicable to low-voltage equipment below 1000 V.

## 9. Construction

The construction of all sections of a unit substation shall be coordinated and the sections shall be compatible with each other.

### 9.1 Phase and Polarity Arrangements

#### 9.1.1

As viewed from the main switching-device side of the operating mechanism, the phase arrangement on buses and primary connections of all sections shall be 1, 2, 3, counting from front to back, top to bottom, or left to right.

However, the following exception should be noted. For reverse arrangement, or other arrangements of unit substations, the transformer bushing phasing may be other than 1, 2, 3, counting from front to back. With these arrangements, a phase transposition shall be made at the connection to the outgoing and incoming sections so that 1, 2, 3 phasing is maintained in these sections.

Copyright © 2003 IEEE All Rights Reserved 

Copyright The Institute of Electrical and Electronics Engineers, Inc.
Provided by IHS under license with IEEE
No reproduction or networking permitted without license from IHS Not for Resale

#### 9.1.2

Panel devices shall be mounted with 1, 2, 3 phasing counting from left to right and top to bottom, as viewed from the front of the panel.

### 9.2 Phase Sequence

The phase sequence on connection diagrams (see 9.7) shall be such that, when considering voltages to neutral on a polyphase system with respect to the element of time, the voltage of phase 1 will reach a maximum before the voltage of phase 2, phase 2 before phase 3, and so forth, in numerical order. This sequence shall be designated as "phase sequence in the order 1, 2, 3," and so forth.

### 9.3 Metal Barriers

Metal barriers shall be provided to isolate the incoming section to the transformer and the outgoing sections to the transformer.

### 9.4 Interlocks

Where transformer line currents exceed the load-interrupting capability of the incoming line-section equipment, interlocking shall be provided to prevent opening the equipment on currents in excess of its rating. Such interlocking shall be effected either mechanically or by a combination of mechanical and electrical devices.

### 9.5 Grounding

The ground bus shall have a provision for connection to a station ground by suitable conductors.

### 9.6 Nameplates

Each incoming, outgoing, and transformer section shall have a nameplate in accordance with its applicable standard. The nameplate shall be mounted so as to be visible after normal installation.

### 9.7 Drawings–Diagrams–Instructions

The drawings, diagrams, and instructions supplied with each unit substation shall include, as applicable, all or a combination of the following drawings, depending on the type and complexity of the equipment:

1) General arrangement (outline) and foundation plan
2) One-line and/or three-line diagram[6]
3) Schematic/elementary diagram[6]
4) Connection/wiring diagram[6]
5) Interconnection diagram[6]
6) Terminal diagram
7) Control-metering-relay panel arrangement and bills of material
8) Instruction books containing information about receiving, handling, storage, installation, operating, and maintenance, covering all sections and all devices mounted on or within the substation.

[6]These documents are defined in ANSI Y14.15-1966, Y14.15a-1988, and Y14.15b-1988.

 Copyright © 2003 IEEE All Rights Reserved

Copyright The Institute of Electrical and Electronics Engineers, Inc.
Provided by IHS under license with IEEE
No reproduction or networking permitted without license from IHS Not for Resale

## 9.8 Coordination

### 9.8.1 Mechanical Coordination and Connection

#### 9.8.1.1

If the transition (throat) section is connected to a metal-enclosed bus, it shall be the responsibility of the manufacturer of the bus duct to match the termination facilities provided by the manufacturers of the transformer and incoming or outgoing section, unless otherwise mutually determined by the affected manufacturers, with the approval of the purchaser.

#### 9.8.1.2

If the transition (throat) section consists of a close-coupled throat arrangement, it shall be the responsibility of the transformer manufacturer to match the termination facilities provided by the manufacturers of the incoming and outgoing sections unless otherwise mutually predetermined by the affected manufacturers, with the approval of the purchaser.

#### 9.8.1.3

If the transition (throat) section is a compartment between equipment, such as low-voltage metal-enclosed switchgear, metal-clad switchgear, or metal-enclosed-interrupter switchgear, the responsibility for matching shall be mutually determined by the affected manufacturers of these equipments, with the approval of the purchaser.

#### 9.8.1.4

Flexible connections shall be provided for the connection between the incoming, outgoing, or transition (throat) sections and the bushings of the transformer except for exposed cover-mounted transformer bushings.

### 9.8.2 Secondary and Control-Wire Interconnections between Sections

#### 9.8.2.1

For adjacent and close-coupled sections, wiring and necessary details shall be provided, and wire shall be isolated from power circuits rated over 600 volts ac, nominal. Isolation shall be by grounded metal enclosures, metal barriers, metal conduit, electrical metallic tubing, or other approved means, except for short lengths of wire at, for example, instrument transformer terminals, temperature-measuring terminals, secondary devices, and fan-control equipment.

#### 9.8.2.2

For remote sections, each section shall be provided with terminal blocks and terminal-block details for users' external interconnections.

# 10. Typical Arrangements

Because of the varied ratings and types of equipment, there are many possible arrangements for unit substations. These are listed in 10.1 and 10.2, and illustrated in Figure 6 and Figure 7.

Copyright © 2003 IEEE All Rights Reserved


--`,-`-`,,`,,`,`,,`---

Copyright The Institute of Electrical and Electronics Engineers, Inc.
Provided by IHS under license with IEEE
No reproduction or networking permitted without license from IHS Not for Resale

### 10.1

A primary unit substation is usually one of the following types:

1) Radial (see Figure 6(a))
2) Distributed-Network (see Figure 6(b))
3) Spot-Network (see Figure 6(c))
4) Secondary (low-voltage) selective (see Figure 6(d))
5) Duplex (see Figure 6(e))

Also see Figure 6(f) for typical alternate arrangements of two-transformer sections.

### 10.2

A secondary unit substation is usually one of the following types:

1) Radial (see Figures 7(a) and 7(b))
2) Distributed-Network (see Figure 7(c))
3) Spot-Network (see Figure 7(d))
4) Secondary (low-voltage) selective (see Figures 7(e), 7(f), and 7(g))

### 10.3

See Section 11. for the selection, application, installation, and maintenance of unit substations.

## 11. Guide for Selection, Application, Installation, and Maintenance of Unit Substations

### 11.1 Application Considerations

In applying unit substations, the following subjects require consideration:

1) Service conditions, that is, environmental considerations
2) System conditions, for example, voltage, frequency, and available short-circuit currents
3) Installation conditions, for example, restricted access or exposure to the general public
4) Load requirements, including duty cycles if applicable

### 11.2 Unusual Service Conditions

Service conditions for unit substations are delineated in Section 4.. It is recommended that usual service conditions be maintained for unit substations if practical. However, unusual service conditions may have to be considered. Such conditions shall be brought to the attention of those responsible for the design and application of the unit substation. These conditions include, but are not limited to:

1) Significant solar radiation
2) Ambient temperature outside the limits in 4.2(1)(b), 4.2(1)(c), and 4.2(1)(d)
3) Altitudes above 3300 feet (1000 meters)

 Copyright © 2003 IEEE All Rights Reserved

Copyright The Institute of Electrical and Electronics Engineers, Inc.
Provided by IHS under license with IEEE
No reproduction or networking permitted without license from IHS Not for Resale

4) Surrounding environment containing damaging fumes, acid, solvents, vapors, steam, salt air, oil vapors, excessive dust, abrasive dust, magnetic or metallic dust, explosive mixtures of dust and gases, or dripping water
5) Exposure to abnormal vibration, Shocks, tilting, earthquake motion
6) Local conditions affecting grounding resistance

For metal-enclosed switchgear equipment (which may be used as the incoming or outgoing sections of unit substations) guidelines and requirements for responding to unusual service conditions are given in ANSI/IEEE C37.20.1-1987, C37.20.2-1987, and C37.20.3-1987. Information concerning unusual service conditions for transformers is included in ANSI/IEEE C57.12.00-1987 and C57.12.01.[2]

## 11.3 System Conditions

### 11.3.1 Voltage and Frequency

The high-voltage and low-voltage ratings of a unit substation are the high-voltage and low-voltage ratings of the included transformer. When the voltage variation is greater than suitable or acceptable for the application, then the use of equipment for automatic tap-changing under load should be considered. (The application of that equipment is not covered in this standard.)

### 11.3.2 Short-Circuit Considerations

Short-circuit current values — short-time and momentary — must be calculated for the incoming and outgoing sections to permit the selection and coordination of switching and protective devices, and also to provide proper protection for the transformer.

Procedures for making the calculations are included in standards such as ANSI/IEEE C37.010-1979 and ANSI/IEEE 141-1986 (Chapter IV).

The “E/X Simplified Method,” described in 5.3.1 of ANSI/IEEE C37.010-1979, is usually satisfactory.

Short-circuit values for common substations and conditions are given in ANSI/IEEE 141-1986, Chapter VII, Table 7.10.

Where interrupting ratings of protective devices are based on symmetrical current, it is only necessary, when applying these devices, to consider the maximum symmetrical short-circuit current, since the product standards covering testing take into account the maximum possible asymmetry.

The short-time (carrying) and momentary (with-stand) short-circuit ratings of a unit substation are defined in Section 8.. In planning the unit substation, its rating shall be made at least equal to the calculated available short-circuit current values. Due consideration should be given to possible future system changes that might demand increases in the calculated available values.

## 11.4 Location — Transformer Selection

The physical location of the unit substation is of major importance in determining the type of transformer to be used for a particular installation. The environment of a particular location may preclude the use of some types, or make one type more desirable than another.

### 11.4.1 Indoor and Outdoor Locations

Liquid-immersed transformers insulated with fire-resistant liquids and sealed transformers are, in general, suitable for use both indoors and outdoors.

Copyright © 2003 IEEE All Rights Reserved 

Copyright The Institute of Electrical and Electronics Engineers, Inc.
Provided by IHS under license with IEEE
No reproduction or networking permitted without license from IHS Not for Resale

Liquid-immersed transformers insulated with flammable liquids are normally suitable only for outdoor locations. They may be installed indoors only when located in fireproof vaults and where local codes permit. See electrical code information in ANSI/NFPA 70-1987 and ANSI/NFPA 70B-1987. Ventilated dry-type transformers are normally suitable only for indoor locations, except when mounted in a specifically designed enclosure.

### 11.4.2 Environmental Conditions

Environmental conditions such as dust, dirt, and fumes may be important factors in the selection of transformer types.

### 11.4.3 Audible Sound Level

If the normal sound level is a factor in the location and operation of any transformer, special consideration should be given to the installation of the equipment. The manufacturer should be consulted.

### 11.4.4 Grounding

It is necessary to take grounding considerations into account when installing unit substations. Refer to ANSI/IEEE 141-1986 and ANSI/IEEE 142-1982 for grounding instructions.

## 11.5 Load Requirements

The load capacity of a unit substation is determined by the kVA rating of the included transformer(s).

### 11.5.1 kVA Rating

The kVA rating of the transformer section shall primarily be sufficient to handle the immediate required load. Consideration should be given to any future load growth that might be required by expanding or changing facilities. When substantial load growth is anticipated, it is usually desirable to install, initially, a single transformer substation with a main circuit breaker; this can be expanded readily to a two-transformer (double-ended) substation when the additional capacity is needed.

For application of demand factors and diversity factors to the total connected load, refer to ANSI/IEEE 141-1986 and 142-1982. Fan-cooling may be used to provide higher kVA ratings to meet load growth. For secondary-selective systems or network systems, fan-cooling is often used to provide higher ratings during periods when one or more transformers are out of service.

Other requirements for the selection and rating of equipment could involve unusual loading conditions, for example, the starting of large motors, or the operation of welding equipment or sensitive loads such as computers and scientific instruments.

### 11.5.2 Loading Guides

Consult the following:

1) For liquid-immersed transformers, consult ANSI/IEEE C57.91-1981 and C57.91b-1985, or ANSI/IEEE C57.92-1981.
2) For dry-type transformers, consult ANSI/IEEE C57.96-1989.
3) For metal-enclosed switchgear assemblies, consult ANSI/IEEE C37.20.1-1987, C20.2-1987, and C37.20.3-1987.

 Copyright © 2003 IEEE All Rights Reserved

--`,,`-`-`,,`,,`,`,,`---

Copyright The Institute of Electrical and Electronics Engineers, Inc.
Provided by IHS under license with IEEE
No reproduction or networking permitted without license from IHS Not for Resale

## 11.6 Miscellaneous Design Considerations

### 11.6.1 Incoming Section

In unit substation applications, it is desirable to be able to electrically isolate the transformer from the incoming circuit. An exception occurs when the transformer of the unit substation is the only load on the incoming circuit; in this case the switching device at the source of the circuit may serve to isolate the transformer electrically.

However, the switching device, whether a fused switch or a relayed circuit breaker, must provide proper protection for the transformer to prevent damage from short-circuit current (carrying or momentary) due to abnormal secondary fault conditions.

### 11.6.2 Transformer Section

The selection of transformers for unit substations is based on such factors as location (see 11.4) and load requirements (see 11.5). Other considerations include surge protection, supplementary cooling, and maintenance requirements.

#### 11.6.2.1 Surge Protection

When connected to circuits which are subject to lightning or switching surges, substations should be equipped with surge-protection equipment that has been selected to limit voltage surges to values below the surge ratings of the unit substation. Figures 8(a) and 8(b) show typical arrangements. See ANSI/IEEE C62.2-1987 for specific information concerning surge protection.

#### 11.6.2.2 Forced-Air Cooling

For double-ended unit substations, where each transformer may have to supply the total load of the substation during an emergency or during maintenance, the forced-air cooling rating of the transformer is often a factor in determining the transformer to be selected.

#### 11.6.2.3 Maintenance Requirements

For information on maintenance requirements and techniques, see the manufacturer’s literature and the following guides:

1) For liquid-immersed transformers: IEEE C57.104-1978 and IEEE C57.106-1977.
2) For dry-type transformers: ANSI/IEEE C57.94-1982.

Differences in the maintenance requirements of the various types of transformer sections may be a factor in determining the type of transformer to be used for a particular application.

Maintenance of liquid-immersed transformers should include at least periodic checking of the tank for pressure-tightness, and sample-testing of the liquid for dielectric strength and other characteristics. Dielectric strength can sometimes be restored by filtering.

Maintenance of sealed transformers should include periodic inspections for pressure-tightness. An indication of positive pressure is generally sufficient, since these units are usually sealed with positive gas-pressure.

If a ventilated dry-type transformer is to be stored or, after installation, deenergized for significant periods of time in humid conditions, a space-heater should be provided within the housing, and left energized from a suitable power source.

Copyright © 2003 IEEE All Rights Reserved


Copyright The Institute of Electrical and Electronics Engineers, Inc.
Provided by IHS under license with IEEE
No reproduction or networking permitted without license from IHS Not for Resale

#### 11.6.2.4 Protective Relaying

See ANSI/IEEE C37.90-1978, ANSI/IEEE C37.91-1985, and C37.91b-1985 for general guidance in the applications of protective relays for unit substations.

### 11.6.3 Outgoing Section

#### 11.6.3.1 Selection of Low-Voltage Protective Devices

Circuit breakers are generally recommended for circuit protection for flexibility in operation. They can be reclosed quickly where a sustained interruption of power cannot be tolerated.

Current-limiting devices can be utilized where reenergizing speed is not critical, or where high interrupting capability (up to 200 000 amperes) is needed, or both. Their speed of operation and current-limiting action can provide protection to coordinate equipment in circuits that have high available short-circuit currents. When current-limiting devices are used, the ratings of protected equipment must be coordinated with the maximum let-through energy and the peak let-through current of the device. Where there may be damage from single-phasing, the protective device needs to open all three phases.

#### 11.6.3.2 Transformer Main Secondary Fused Switch or Circuit Breaker

A transformer main secondary protective device should be used for the following reasons:

(1) In case of emergency, it is quicker and simpler to deenergize the entire load by opening a transformer main secondary protective device at each substation than to open each feeder’s protective device.

In case of trouble in the primary cable or transformer, it is often desirable to disconnect the low-voltage bus from the transformers and to supply the bus from an alternate source.

(2) It provides fault-protection for the bus and backup-protection for the feeder devices. In addition, where a main secondary protective device is present, it may provide overload protection for a transformer, and less-sensitive primary protection may be used. This is particularly true for ground-fault protection.

(3) Where interlocking is used, it provides for, and simplifies, key-interlocking between the primary switch and secondary switchgear.

(4) When a transformer main secondary relayed circuit breaker is used, coordination with primary protective devices is more readily obtainable.

(5) It provides flexibility. Note that a secondary main protective device is essential for several of the circuit arrangements in Figures 6(a) through 7(g). A radial-type unit substation that includes a main fused switch or circuit breaker can later be expanded into one of the more elaborate circuit arrangements without extensive field modification.

#### 11.6.3.3 Continuous-Current Rating of Transformer Secondary Protective Devices and Connections

The transformer main secondary circuit breakers, or fuse switches and connections, should have continuous-current ratings that are approximately 25 percent greater than the continuous-current rating of the transformer. This is recommended because transformers often carry short-time loads above their nameplate ratings due to short duty cycles or low-ambient temperatures.

When selecting the continous-current rating of the transformer’s main secondary protective devices and connections, consideration should also be given to whether the transformer has, or will have, a continuous supplementary-cooled rating.


Copyright © 2003 IEEE All Rights Reserved

Copyright The Institute of Electrical and Electronics Engineers, Inc.
Provided by IHS under license with IEEE
No reproduction or networking permitted without license from IHS Not for Resale

## 11.7 Installation, Field-Testing, Operation, and Maintenance

The installation and field-testing of unit substations should, in general, be performed in accordance with manufacturer's instructions (refer to ANSI/NFPA 70B-1987 and ANSI/IEEE C37.20.1-1987, C37.20.2-1987, and C37.20.3-1987). Meggering is recommended when equipments have been stored in damp and dirty locations. If the megger readings are less than the manufacturer's recommendations, a drying-out and cleaning of the insulation system is recommended. When dielectric testing is performed, it should be conducted at the reduced values specified for field-testing in the applicable referenced standards.

When various sections of the unit substation have to be assembled in the field, the connections should be made in strict accordance with the manufacturer's drawings and instructions.

Operation and maintenance instructions are also furnished by the manufacturer and should be followed. Note that additional maintenance may be required when equipment is installed in unusual service environments (see 11.2). General maintenance requirements for transformers are suggested in 11.6.2.3.

**Table 1— Standard Three-Phase Transformer kVA Ratings from 112.5 kVA through 2500 kVA1***

| Self-Cooled† | | Forced-Air-Cooled‡ | | |
|---|---|---|---|---|
| Liquid-Immersed and Ventilated Dry-Type | Sealed Dry-Type | Liquid Immersed | Ventilated Dry-Type | Sealed Dry-Type |
| 112.5 | — | — | — | — |
| 150 | — | — | — | — |
| 225 | — | — | — | — |
| 300 | — | — | 400 | — |
| 500 | — | — | 667 | — |
| 750 | 750 | 862 | 1000 | — |
| 1000 | 1000 | 1150 | 1333 | — |
| 1500 | 1500 | 1725 | 2000 | — |
| 2000 | 2000 | 2300 | 2667 | — |
| 2500 | 2500 | 3125 | 3333 | — |

*Based on an average winding temperature rise, due to resistance, of: 65°C rise for liquid-immersed transformers; 150°C rise for dry-type transformers. ("Other" rises of 115°C and 80°C are also available for ventilated-dry-type transformers.)

†For transformers rated above 2500 kVA, the forced-air-cooled rating is generally 125% for liquid immersion, and 133% for ventilated dry-types.

‡When a future forced-air-cooled rating is planned, self-cooled transformers shall be specified to have provision for future addition of equipment for fan-cooling.

Copyright © 2003 IEEE All Rights Reserved


Copyright The Institute of Electrical and Electronics Engineers, Inc.
Provided by IHS under license with IEEE
No reproduction or networking permitted without license from IHS
Not for Resale

**Table 2— kVA and Preferred-Voltage Rating Combinations — Three-Phase Liquid-Immersed Self-Cooled Transformers (without Load-Tap-Changing) — for Use in Primary Unit Substations**

| | Low-Voltage Rating (Volts) | | |
|---|---|---|---|
| | 2400<br>4160Y/2400 | 4800, 6900<br>8320Y/4800<br>12000Y/6900<br>12470Y/7200<br>13200Y/7620<br>13800Y/7970 | 13800 |
| High Voltage Rating (Volts) | kVA | kVA | kVA |
| 6 900 | 1 000– 3 750 | — | — |
| 13 800 | 1 000– 7 500 | — | — |
| 23 000 | 1 000–10 000 | 1 000–10 000 | — |
| 34 500 | 1 000–10 000 | 1 000–10 000 | 1 000–10 000 |

NOTES:

1-Voltages listed in this table are in agreement with the standard voltages listed in ANSI C84.1-1989. Voltages listed in transformer product standards may differ slightly.

2-All voltages are delta unless otherwise indicated.

3-When a dash connects kilovolt-ampere ratings, include all intervening kVA ratings listed in Table 1 and transformer standards.

4-See Table 1 for forced-air-cooled ratings.

**Table 3— kVA and Preferred-Voltage Rating Combinations — Three-Phase Ventilated Dry-Type Transformers — for Use in Primary Unit Substations**

| | Low-Voltage Rating (Volts) 2400, 4160GrdY/2400, 4160 |
|---|---|
| High-Voltage Rating (Volts) | Self-Cooled kVA Ratings* |
| 13 800 | 750–2500 |
| 23 000 | 1500–2500 |
| 34 500 | 1500–2500 |

*See Table 1 for forced-air-cooled ratings.


Copyright © 2003 IEEE All Rights Reserved

--`,,`-`-`,,`,,`,`,,`---

Copyright The Institute of Electrical and Electronics Engineers, Inc.
Provided by IHS under license with IEEE
No reproduction or networking permitted without license from IHS

Not for Resale

**Table 4— kVA and Preferred-Voltage Rating Combinations — Three-Phase Sealed Dry-Type Transformers — for Use in Primary Unit Substations**

| | Low-Voltage Rating (Volts) 2400, 4160GrdY/2400, 4160 |
|---|---|
| High-Voltage Rating (Volts) | Self-Cooled kVA Ratings |
| 13 800 | 750–2500 |
| 23 000 | 1500–2500 |
| 34 500 | 1500–2500 |

NOTES:

1 — Voltages listed in these tables are in agreement with the standard voltages listed in ANSI C84.1-1989. Voltages listed in transformer product standards may differ slightly in some documents.

2 — All voltages are delta unless otherwise indicated.

3 — When a dash connects kilovolt-ampere ratings, include all intervening kVA ratings listed in Table 1.

**Table 5— kVA and Preferred-Voltage Rating Combinations — Three-Phase Liquid-Immersed Ventilated Dry-Type, and Sealed Dry-Type Transformers — for Use in Secondary Unit Substations**

| High-Voltage Ratings (Volts) | Low-Voltage Ratings (Volts) | Range of Self-Cooled Ratings (kVA) | | |
|---|---|---|---|---|
| | | Liquid-Immersed (OA) | Ventilated Dry-Type (AA) | Sealed Dry-Type (GA) |
| 2 400 | 208Y/120 240 | 112.5–1000 | 112.5–1000 | 750–1000 |
| | 480Y/277 480 | 112.5–1500 | 112.5–1500 | 750–1500 |
| 4 160<br>4 800 | 208Y/120 240 | 112.5–1000 | 112.5–1000 | 750–1000 |
| | 480Y/277 480 | 112.5–1500 | 112.5–1500 | 750–1500 |
| 6 900 | 208Y/120 240 | 112.5–1000 | 112.5–1000 | 750–1000 |
| | 480Y/277 480 | 112.5–2500 | 112.5–2500 | 750–2500 |
| 13 800 | 208Y/120 240 | 112.5–1000 | 112.5–1000 | 750–1000 |
| | 480Y/277 480 | 112.5–2500 | 112.5–2500 | 750–2500 |
| 23 000 | 208Y/120 240 | 500–1000 | 300–1000 | 750–1000 |
| | 480Y/277 480 | 500–2500 | 300–2500 | 750–2500 |
| 34 500 | 208Y/120 240 | 500–1000 | 300–1000 | 750–1000 |
| | 480Y/277 480 | 500–2500 | 300–2500 | 750–2500 |

NOTES:

1-Voltages listed in these tables are in agreement with the standard voltages listed in ANSI C84.1-1989. Voltages listed in transformer product standards may differ slightly in some documents.

2-All voltages are delta unless otherwise indicated.

3-When a dash connects kilovolt-ampere ratings, include all intervening kVA ratings listed in Table 1.

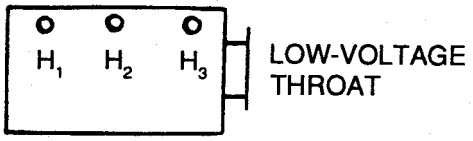


**Figure 1 —Bushings on Transformer Cover**

Copyright © 2003 IEEE All Rights Reserved


Copyright The Institute of Electrical and Electronics Engineers, Inc.
Provided by IHS under license with IEEE
No reproduction or networking permitted without license from IHS
Not for Resale

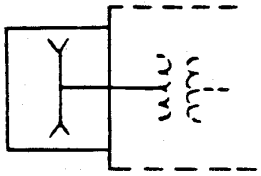

**Figure 2 —Terminal Chamber**

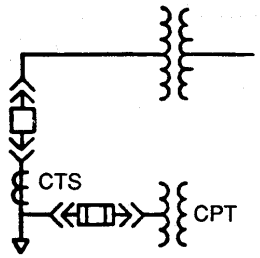


*(a) For One Incoming Line*

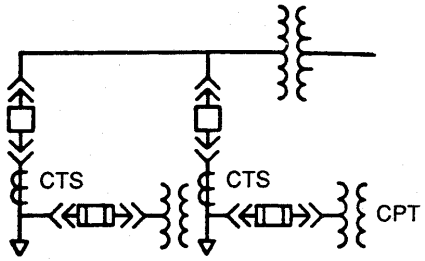


*(b) For Two Incoming Lines*

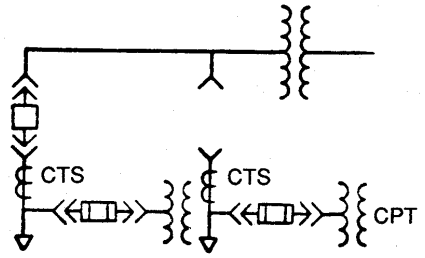


*(c) For Two Incoming Lines, Selector Function*

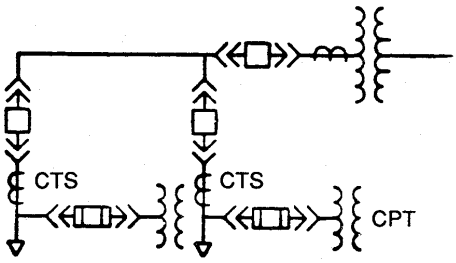


*(d) For One Incoming Line, Looped*

NOTE — For Metal-Enclosed Interrupter Switchgrear, the switching and interrupting devices may be fixed rather than removable.

**Figure 3 —Metal-Clad Switchgear or Metal-Enclosed Interrupter Switchgear**


Copyright © 2003 IEEE All Rights Reserved

Copyright The Institute of Electrical and Electronics Engineers, Inc.
Provided by IHS under license with IEEE
No reproduction or networking permitted without license from IHS
Not for Resale

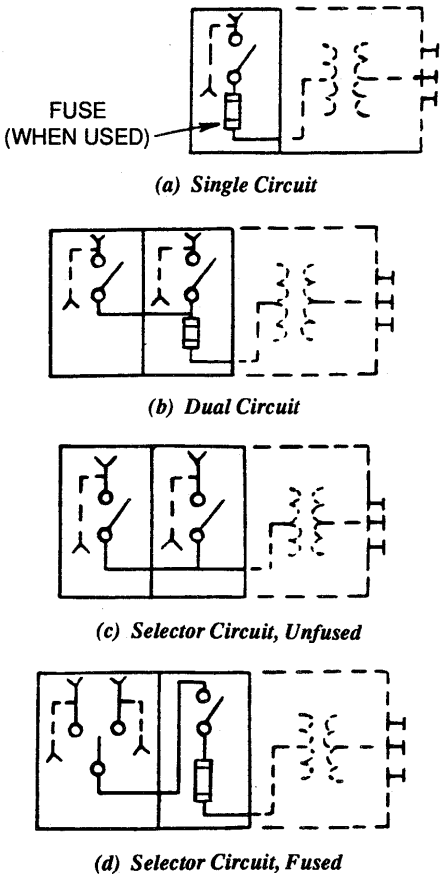


**Figure 4 —Interrupter or Disconnect Switches**

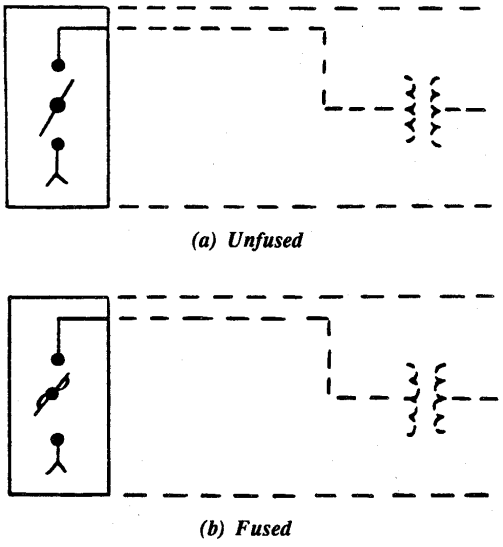


**Figure 5 —Interrupter Cutouts**

Copyright © 2003 IEEE All Rights Reserved


Copyright The Institute of Electrical and Electronics Engineers, Inc.
Provided by IHS under license with IEEE
No reproduction or networking permitted without license from IHS
Not for Resale

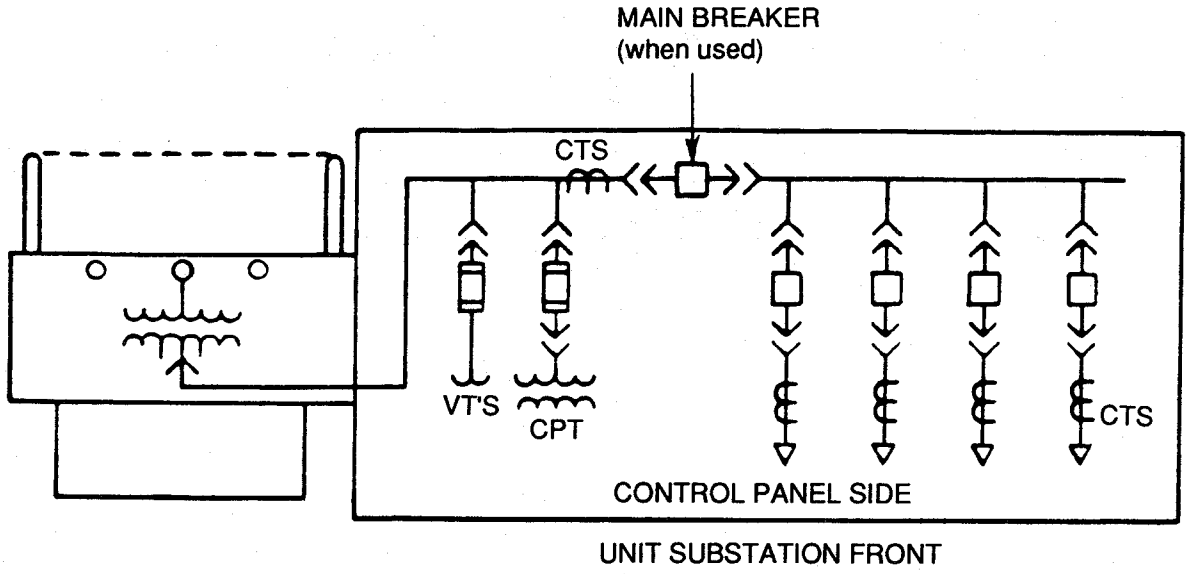


*(a) Radial-Type*

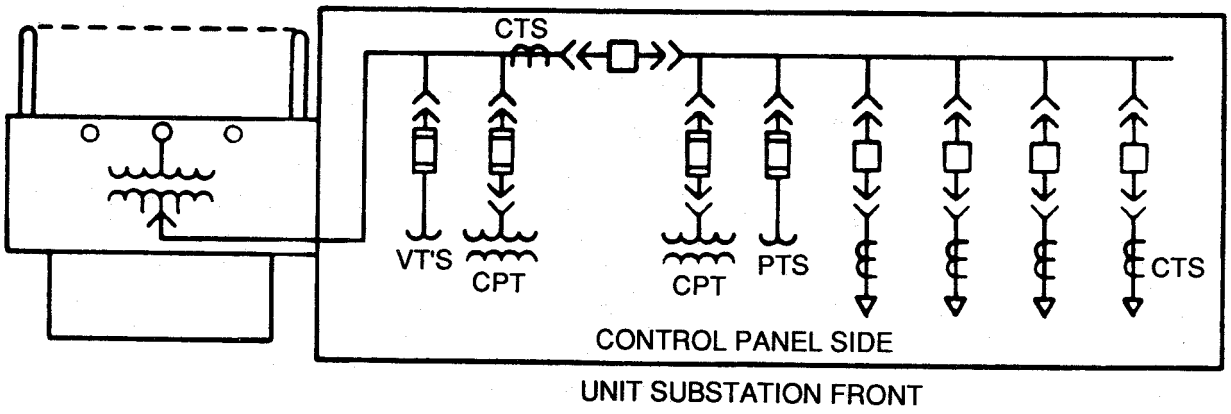


*(b) Distributed-Network-Type*

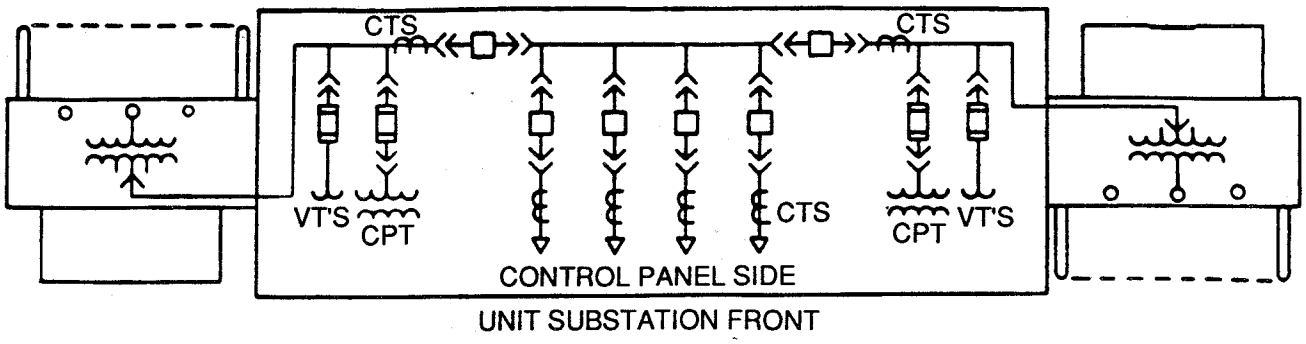


*(c) Spot-Network-Type*


Copyright © 2003 IEEE All Rights Reserved

Copyright The Institute of Electrical and Electronics Engineers, Inc.
Provided by IHS under license with IEEE
No reproduction or networking permitted without license from IHS
Not for Resale

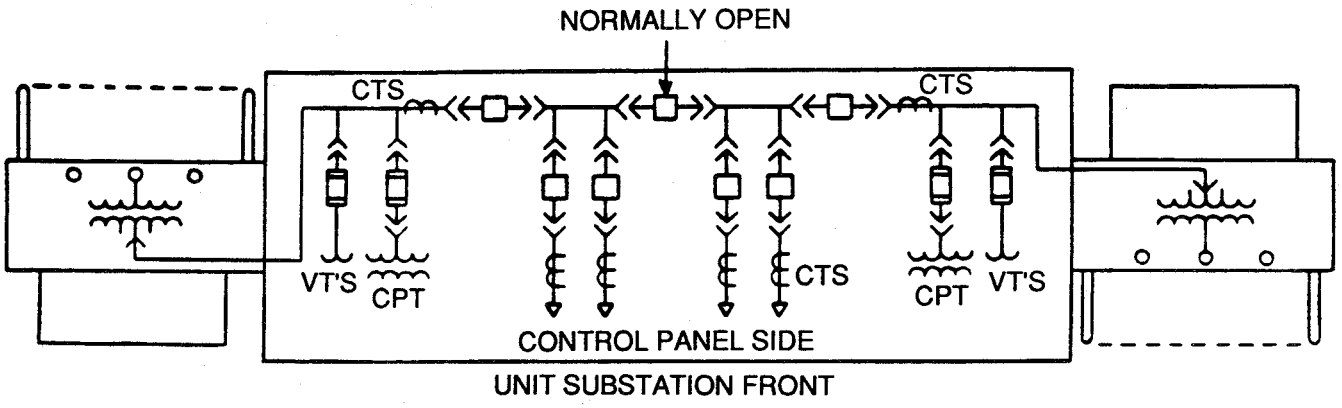


*(d) Secondary-Selective-Type*

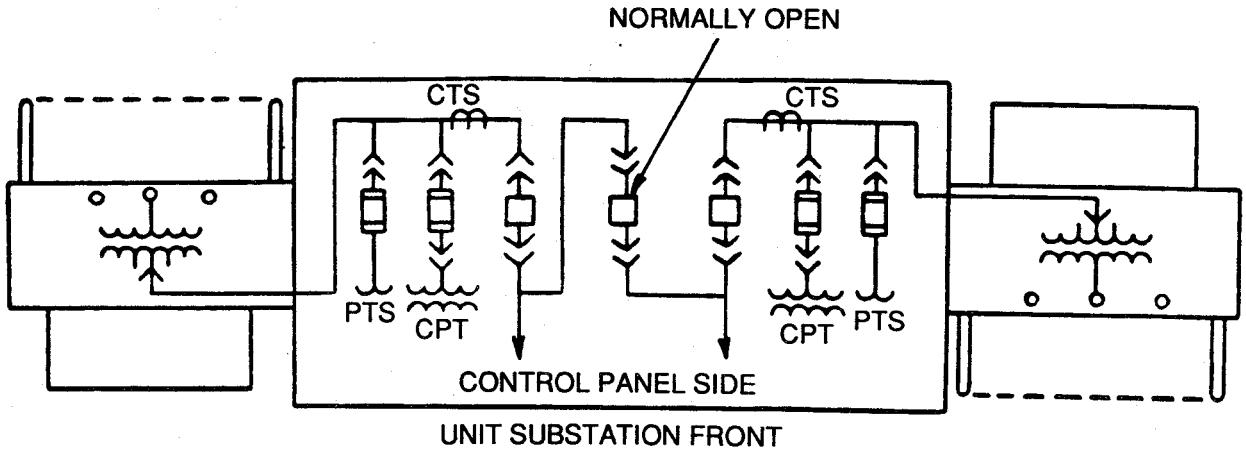


*(e) Duplex-Type (Breaker-and-a-Half Scheme)*

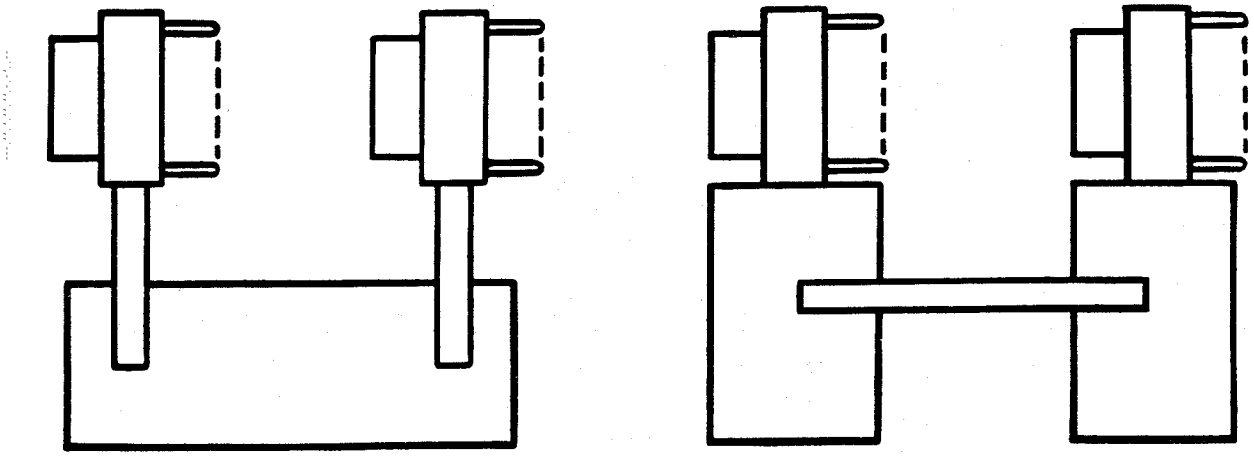

*(f) Two-Transformer Unit Substations (Alternate Arrangements)*

**Figure 6 —Typical Arrangements of Primary Unit Substations**

Copyright © 2003 IEEE All Rights Reserved


Copyright The Institute of Electrical and Electronics Engineers, Inc.
Provided by IHS under license with IEEE
No reproduction or networking permitted without license from IHS
Not for Resale

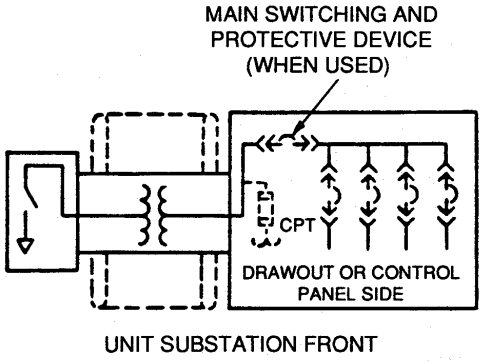


*(a) Radial-Type*

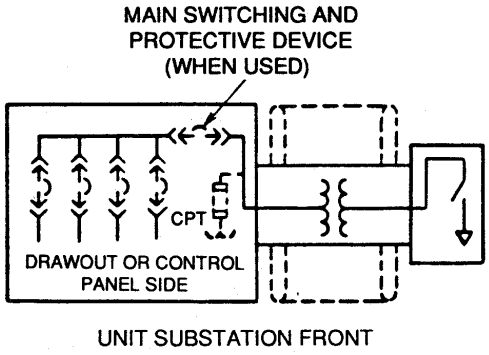


*(b) Radial-Type with Reverse Arrangement*

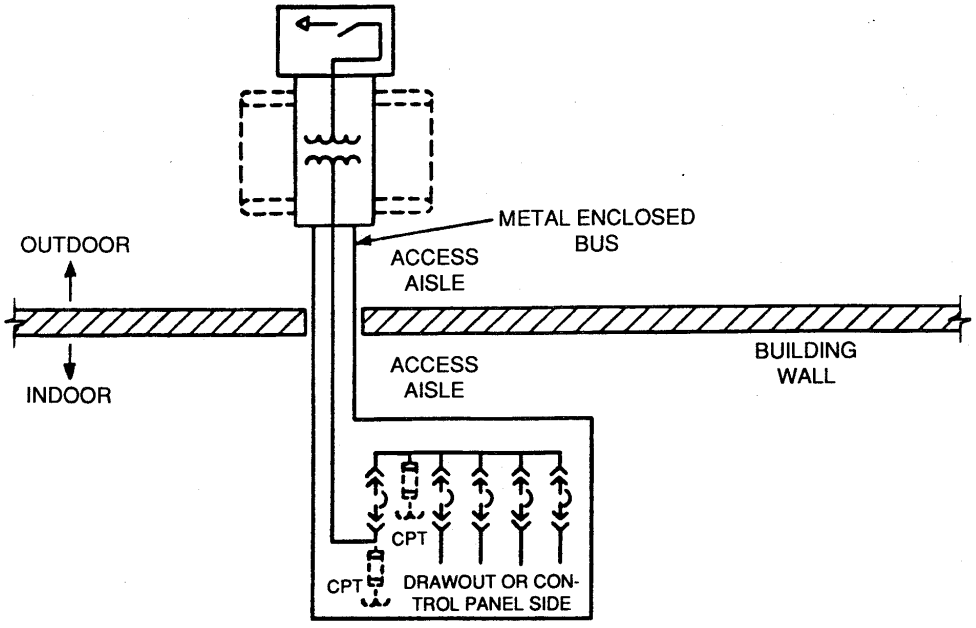


*(c) Distributed-Network-Type with Indoor-Outdoor Arrangement*


Copyright © 2003 IEEE All Rights Reserved

Copyright The Institute of Electrical and Electronics Engineers, Inc.
Provided by IHS under license with IEEE
No reproduction or networking permitted without license from IHS
Not for Resale

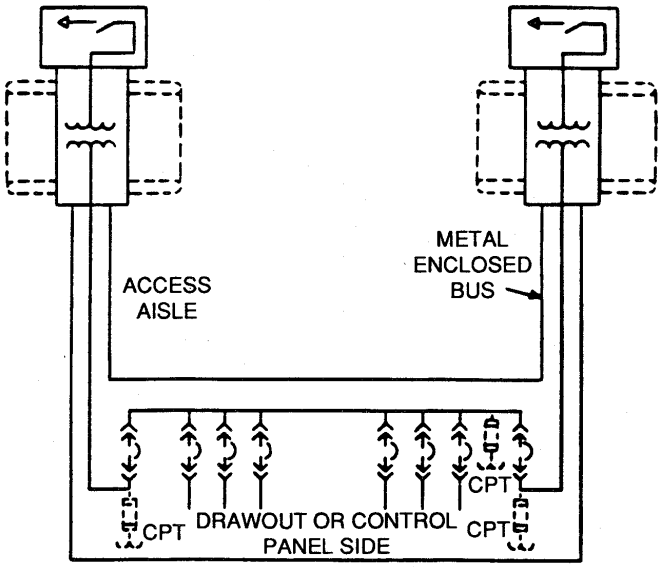


*(d) Spot-Network-Type*

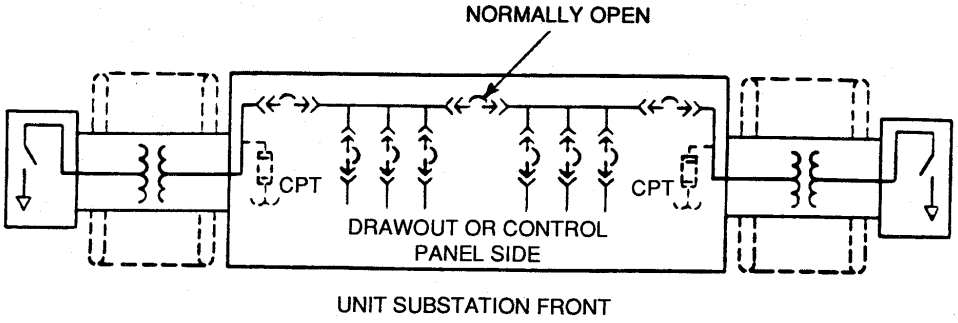


*(e) Secondary-Select-Type*

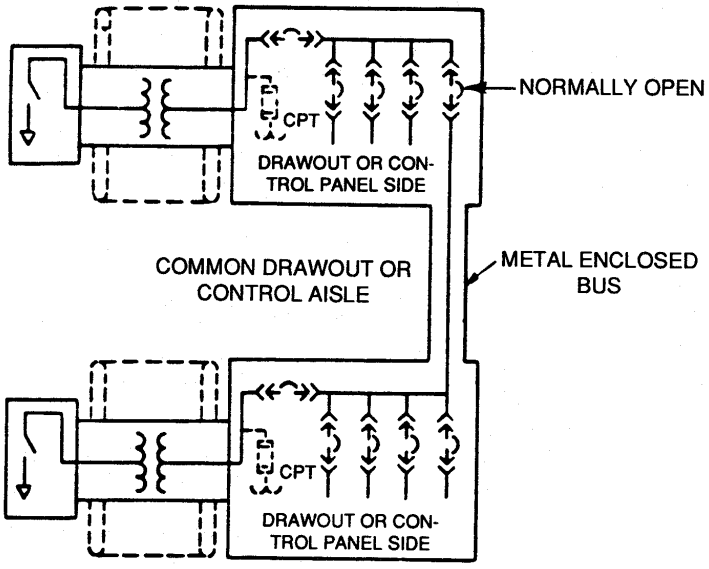


*(f) Secondary-Select-Type with Common Drawout Aisle Arrangement*

Copyright © 2003 IEEE All Rights Reserved


Copyright The Institute of Electrical and Electronics Engineers, Inc.
Provided by IHS under license with IEEE
No reproduction or networking permitted without license from IHS
Not for Resale

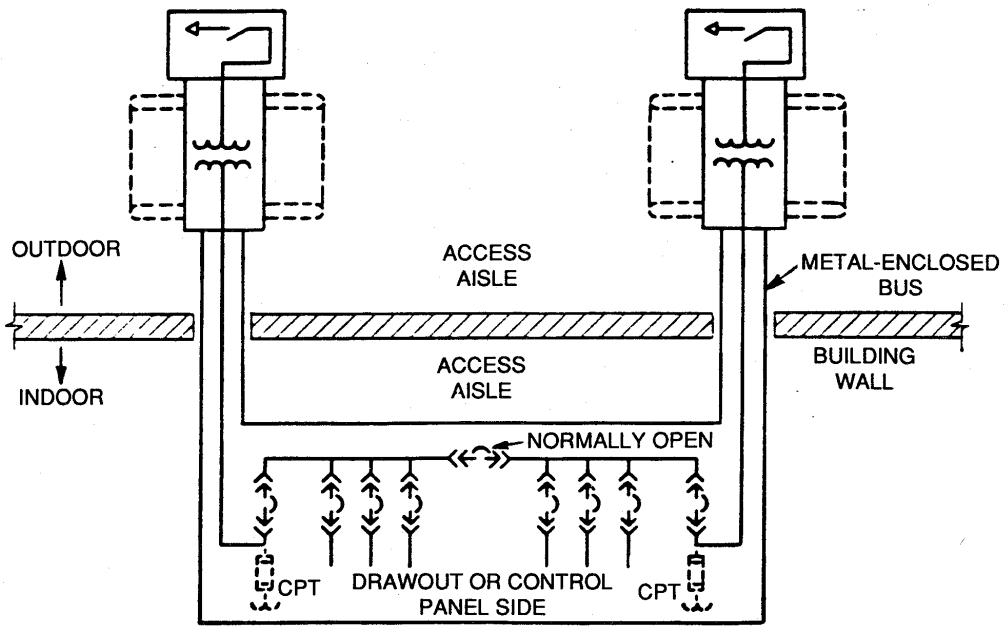


*(g) Secondary-Select-Type with Indoor-Outdoor Arrangement*

**Figure 7 —Typical Arrangements of Secondary Unit Substations**

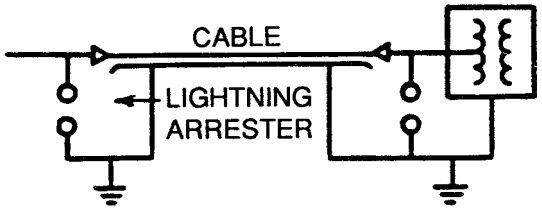


*(a) Ventilated Transformer*

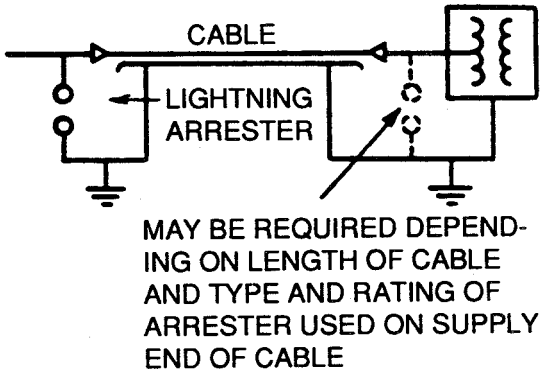


*(b) Gas-Filled, Sealed, and Liquid-Immersed Transformer*

**Figure 8 —Typical Surge Protection Schemes**


Copyright © 2003 IEEE All Rights Reserved

Copyright The Institute of Electrical and Electronics Engineers, Inc.
Provided by IHS under license with IEEE
No reproduction or networking permitted without license from IHS
Not for Resale